REVISION	DATE	DESCRIPTION	BY
1	04-23-2015	WINGWALL 4 ROTATED 5 DEGREES	JS

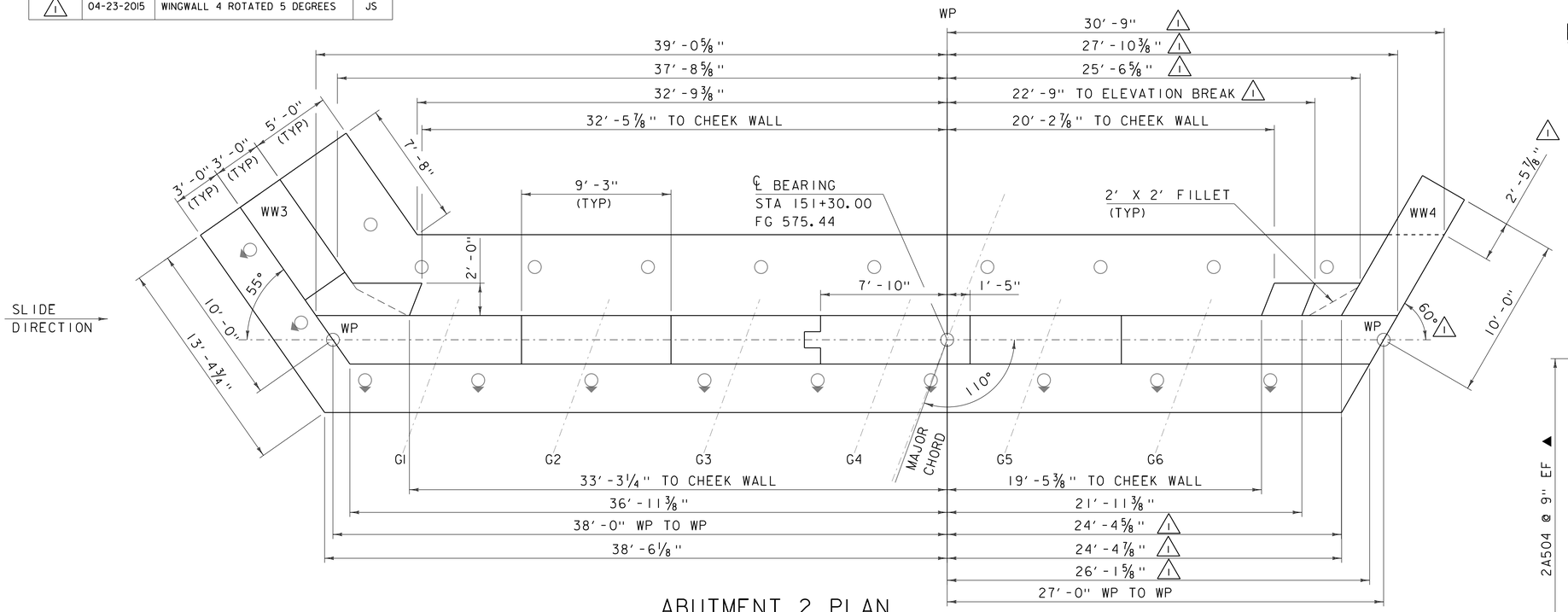

ABUTMENT 2 PLAN

SCALE: ¼″ = 1′-0″

BRIDGE SEAT ELEVATIONS

GIRDER	ELEVATION
G1	571.11
G2	570.66
G3	570.22
G4	569.77
G5	569.32
G6	568.87

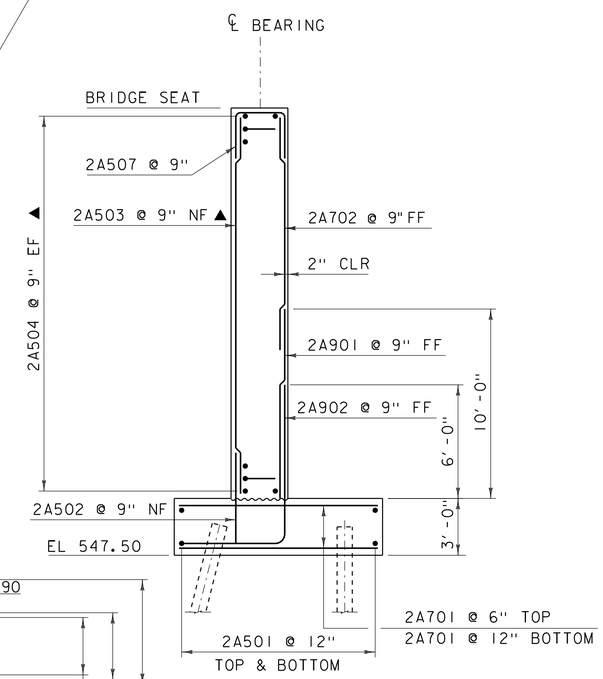

ABUTMENT 2 REINFORCING AT BRIDGE SEAT

SCALE: ¼″ = 1′-0″

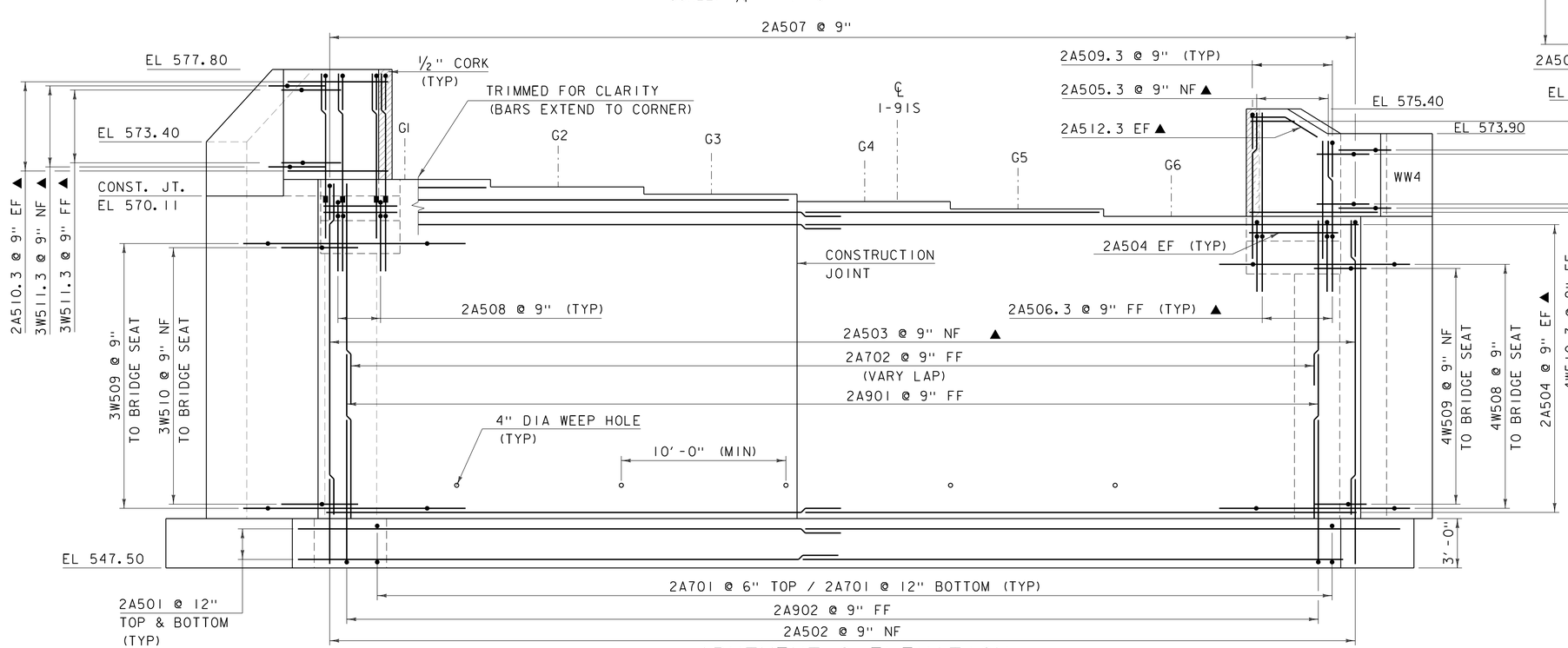

ABUTMENT 2 ELEVATION

SCALE: ¼″ = 1′-0″

NOTE:

NF = NEAR FACE
FF = FAR FACE
EF = EACH FACE
▲ = CUT TO FIT IN FIELD
▬ = MECHANICAL CONNECTOR
3″ CLEAR, UNLESS OTHERWISE SPECIFIED ON THE PLANS.
2′-2″ LAP FOR #5 BAR
2′-7″ LAP FOR #6 BAR
3′-5″ LAP FOR #7 BAR
4′-6″ LAP FOR #8 BAR

PROJECT NAME: HARTFORD
PROJECT NUMBER: IM 091-2(79)

FILE NAME: s12a132sub_ab2
PROJECT LEADER: K. HIGGINS
DESIGNED BY: G. LAROCHE
ABUTMENT 2

PLOT DATE: 23-APR-2015
DRAWN BY: J. SALVATORI
CHECKED BY: G. LAROCHE
SHEET 105 OF 166