Apr 14, 2014

HURON CASTING, INC.
7050 HARTLEY ST.
PIGEON, MI, 48755
Physical and Chemical Certification Report

Customer:
ASSOCIATED PILE & FITTING
ATTN: ACCOUNTS PAYABLE
P.O. BOX 1264
CLIFTON, NJ, 07012-1264

PILE POINTS

Part Number: 77600-B 14"46#
Job: 939
Specification: ASTM A148 90-60

PO Number:
Packing Slip:
Qty: 100

NOTE: N/A

Heat	Date Code	C	P	S	Cr	Ni	Al	Si	Mn	Mo	Ti	Zr	Cu	V	B.H.	Yield P.S.I.	Tensile P.S.I.	Elongation	Red Area	DI	Charpy
D0341	R46	0.255	0.011	0.006	0.048	0.029	0.033	0.502	1.129	0.022	0.033	0.022	0.035	0.007	197.	67037.	92471.	23.4	58.3	1.08	<NA>
Serial #'s: <NA>																					
D0342	R47	0.260	0.013	0.006	0.047	0.028	0.041	0.529	1.059	0.021	0.034	0.030	0.037	0.010	207.	68063.	92187.	25.4	63.5	1.06	<NA>
Serial #'s: <NA>																					

We certify the material was 100% made, melted, manufactured, sampled, tested in the USA and inspected in accordance with the specification and was found to meet the requirements.

Dan McIntosh

Dan McIntosh, QA Manager

CERTIFIED MILL TEST REPORT

Steel Dynamics®

(260) 625-8100 (260) 625-8950 FAX

Quality Steel 100% EAF Melted and Manufactured in the USA

Recycled content: PC = 83%, PI = 13.3%

ISO 9001:2008 and ABS Certified

Printed: **04 / 10 / 2014**
Produced: **03 / 22 / 2013**

Ship to:
JD FIELDS
c/o Aliquippa Terminals
100 Woodlawn Road
Aliquippa PA, 15001 US
Attn: Janet Davis

Customer # 000076

Bill to:
JD FIELDS
P.O. Box 134401
Houston TX, 77219 US
Attn: Alice Perez

GENERAL INFORMATION

Product H-Piling
Size HP14X89
HP 360 x 132
Heat Number B084140
Condition(s) As-Rolled
Fine Grained
Fully Killed
No Weld Repair

SPECIFICATIONS

Standards	Grades
ASTM A6/A6M - 12	
» ASTM A572/A572M - 12	A572 gr50/gr345
ASTM A709/A709M - 11	A709 gr50/gr345
AASHTO M270M/M270 - 11	M270 gr345/gr50
ASTM A992/A992M - 11	A992 / A992M
ASTM A36/A36M - 08	A36 / A36M
CSA G40.21-13	50W/350W

SHIPMENT DETAILS

BOL # 0000285837 - 32040.00 lbs

Bundle / ASN #	Length	pcs	Cust PO | Recv PO | Job
021802149	60' 0"	2	STK-55928
021802151	60' 0"	2	STK-55928 GUILFORD
021802147	60' 0"	2	STK-55928

CHEMICAL ANALYSIS (weight percent)

C	Mn	P	S	Si	Cu	Ni	Cr	Mo	Sn	V	Nb/Cb	Al	N	B	*C1	*C2	*C3	*PC	*I	Analysis Type
.066	1.24	.019	.024	.23	.26	.10	.11	.033	.011	.044	<.001	.003	.0104	.0003	.34	.37	.32	.17	5.42	Heat

MECHANICAL TESTING

Test	Yield (fy) Strength ksi / MPa	Tensile (fu) Strength ksi / MPa	fy / fu ratio	% Elong. {8" gage}
1	58 / 399	72 / 495	.81	25
2	58 / 403	72 / 498	.81	26
3				
4				

CHARPY IMPACT TESTS (available only when specified at time of order)

Test	Temp F / C	Absorbed Energy ft-lbf / J Specimen 1	Specimen 2	Specimen 3	Average	Minimum
1						
2						
3						
4						
5						
6						
7						

Notes: *Calculated Chemistry Values: Carbon Equivalents (C1, C2, C3, PC), Corrosion Index (I) **I** {ASTM G101}= 26.01(Cu)+3.88(Ni)+1.20(Cr)+1.49(Si)+17.29(P)-7.29(Cu)(Ni)-9.10(Ni)(P)-33.39(Cu²)
CE1 {IIW}=C+Mn/6+(Cr+Mo+V)/5+(Ni+Cu)/15 **CE2** {AWS}=C+(Mn+Si)/6+(Cr+Mo+V)/5+(Ni+Cu)/15 **CE3** {CET} = C + (Mn/6) + (Si/24) + (Cr/5) + (Ni/40) +(Mo/4) + (V/14) **Pcm**{AWS} = C+Si/30+Mn/20+Cu/20+Ni/60+Cr/20+mo/15+V/10+5B

I hereby certify that the material described herein has been made to the applicable specification by the electric arc furnace/continuous cast process and tested in accordance with the requirements of American Bureau of Shipping Rules with satisfactory results.

Signed:

ABS CERTIFICATION

I hereby certify that the content of this report are accurate and correct. All tests and operations performed by this material manufacturer are in compliance with the requirements of the material specifications and applicable purchaser designated requirements.

Signed: **Yury Krotov**
Manager of Product Quality and Process Improvement

State of Indiana, County of Whitley Sworn to and subscribed before me

this _____ day of _____

Signed: _____ Notary Public

My commission expires: _____

Form F-6100-002-054 rev 7

ASTM A6 - 14.6: A signature is not required on the test report; however, the document shall clearly identify the organization submitting the report. Notwithstanding the absence of a signature, the organization submitting the report is responsible for the content of the report

CERTIFIED MILL TEST REPORT

Steel Dynamics, Inc.®
Structural and Rail Division • Columbia City, Indiana
(260) 625-8100 (260) 625-8950 FAX

Quality Steel 100% EAF Melted and Manufactured in the USA
Recycled content: PC = 92.1%, PI = 5.7%
ISO 9001:2008 and ABS Certified

Printed: **05 / 21 / 2013**
Produced: **03 / 22 / 2013**

Ship to: Customer # 000076
ALIQUIPPA TERMINALS (HP)
100 Woodlawn Road
Aliquippa PA, 15001 US
Attn: Jim Brown

Bill to:
JD FIELDS
P.O. Box 134401
Houston TX, 77219 US
Attn: Alice Perez

GENERAL INFORMATION

Product	H-Piling
Size	HP14X89
	HP 360 x 132
Heat Number	B084138
Condition(s)	As-Rolled
	Fine Grained
	Fully Killed
	No Weld Repair

SPECIFICATIONS

Standards	Grades
ASTM A6/A6M - 12	
» ASTM A572/A572M - 12	A572 gr50/gr345
ASTM A709/A709M - 11	A709 gr50/gr345
AASHTO M270M/M270 - 11	M270 gr345/gr50
ASTM A36/A36M - 08	A36 / A36M
ASTM A992/A992M - 11	A992 / A992M
CSA G40.21-04	44W/300W

SHIPMENT DETAILS

BOL # 0000284796 - 31150.00 lbs

Bundle / ASN #	Length	pcs	Cust PO | Recv PO | Job	
021802203	50' 0"	2	STK-55928	
021802204	50' 0"	2	STK-55928 2	GUILFORD
021802205	50' 0"	1	STK-55928	
021802206	50' 0"	1	STK-55928 1	GUILFORD
021802202	50' 0"	1	STK-55928	

CHEMICAL ANALYSIS (weight percent)

C	Mn	P	S	Si	Cu	Ni	Cr	Mo	Sn	V	Nb/Cb	Al	N	B	*C1	*C2	*C3	*PC	*I	Analysis Type
.075	1.24	.018	.021	.22	.28	.08	.11	.037	.011	.043	<.001	<.001	.0088	.0005	.35	.38	.33	.18	5.56	Heat

MECHANICAL TESTING

Test	Yield (fy) Strength ksi / MPa	Tensile (fu) Strength ksi / MPa	fy / fu ratio	% Elong. {8" gage}
1	58 / 399	69 / 474	.84	25
2	58 / 400	70 / 486	.82	24
3				
4				

Charpy Impact Tests (available only when specified at time of order)

Temp F / C	Absorbed Energy ft-lbf / J Specimen 1	Specimen 2	Specimen 3	Average	Minimum

Notes: *Calculated Chemistry Values: Carbon Equivalents (C1, C2, C3, PC), Corrosion Index (I)
CE1 {IIW}=C+Mn/6+(Cr+Mo+V)/5+(Ni+Cu)/15 **CE2** {AWS}=C+(Mn+Si)/6+(Cr+Mo+V)/5+(Ni+Cu)/15 **CE3** {CET} = C + (Mn/6) + (Si/24) + (Cr/5) + (Ni/40) +(Mo/4) + (V/14) **Pcm**{AWS} = C+Si/30+Mn/20+Cu/20+Ni/60+Cr/20+mo/15+V/10+5B
I {ASTM G101}= 26.01(Cu)+3.88(Ni)+1.20(Cr)+1.49(Si)+17.29(P)-7.29(Cu)(Ni)-9.10(Ni)(P)-33.39(Cu²)

I hereby certify that the material described herein has been made to the applicable specification by the electric arc furnace/continuous cast process and tested in accordance with the requirements of American Bureau of Shipping Rules with satisfactory results.

Signed:

ABS CERTIFICATION

I hereby certify that the content of this report are accurate and correct. All tests and operations performed by this material manufacturer are in compliance with the requirements of the material specifications and applicable purchaser designated requirements.

Signed: **Yury Krotov**
Manager of Product Quality and Process Improvement

Form F-6100-002-054 rev 6

State of Indiana, County of Whitley Sworn to and subscribed before me

this _____ day of _____

Signed: _____ My commission expires: _____
Notary Public

ASTM A6 - 14.6: A signature is not required on the test report; however, the document shall clearly identify the organization submitting the report. Notwithstanding the absence of a signature, the organization submitting the report is responsible for the content of the report

CERTIFIED MILL TEST REPORT

Steel Dynamics, Inc.®
Structural and Rail Division • Columbia City, Indiana
(260) 625-8100 (260) 625-8950 FAX

Quality Steel 100% EAF Melted and Manufactured in the USA
Recycled content: PC = 92.1%, PI = 5.7%
ISO 9001:2008 and ABS Certified

Ship to: Customer # 000076
ALIQUIPPA TERMINALS (HP)
100 Woodlawn Road
Aliquippa PA, 15001 US
Attn: Jim Brown

Bill to:
JD FIELDS
P.O. Box 134401
Houston TX, 77219 US
Attn: Alice Perez

Printed: **05 / 21 / 2013**
Produced: **03 / 22 / 2013**

GENERAL INFORMATION

Product H-Piling
Size HP14X89
HP 360 x 132
Heat Number B084139
Condition(s) As-Rolled
Fine Grained
Fully Killed
No Weld Repair

SPECIFICATIONS

Standards	Grades
ASTM A6/A6M - 12	
» ASTM A572/A572M - 12	A572 gr50/gr345
ASTM A709/A709M - 11	A709 gr50/gr345
AASHTO M270M/M270 - 11	M270 gr345/gr50
ASTM A36/A36M - 08	A36 / A36M
ASTM A992/A992M - 11	A992 / A992M
CSA G40.21-04	44W/300W

SHIPMENT DETAILS

BOL # 0000284796 - 13350.00 lbs

Bundle / ASN #	Length	pcs	Cust PO | Recv PO | Job
021802205	50' 0"	1	STK-55928
021802206	50' 0"	1	STK-55928 GUILFORD
021802202	50' 0"	1	STK-55928

CHEMICAL ANALYSIS (weight percent)

C	Mn	P	S	Si	Cu	Ni	Cr	Mo	Sn	V	Nb/Cb	Al	N	B	*C1	*C2	*C3	*PC	*I	Analysis Type
.065	1.25	.020	.022	.22	.31	.11	.12	.028	.012	.044	<.001	.002	.0100	.0003	.34	.38	.32	.16	5.79	Heat

MECHANICAL TESTING

Test	Yield (fy) Strength ksi / MPa	Tensile (fu) Strength ksi / MPa	fy / fu ratio	% Elong. {8" gage}
1	57 / 391	70 / 481	.81	25
2	58 / 397	71 / 492	.81	28
3				
4				

Charpy Impact Tests (available only when specified at time of order)

Temp F / C	Absorbed Energy ft-lbf / J Specimen 1	Specimen 2	Specimen 3	Average	Minimum

Notes: *Calculated Chemistry Values: Carbon Equivalents (C1, C2, C3, PC), Corrosion Index (I)
CE1 {IIW}=C+Mn/6+(Cr+Mo+V)/5+(Ni+Cu)/15 **CE2** {AWS}=C+(Mn+Si)/6+(Cr+Mo+V)/5+(Ni+Cu)/15 **CE3** {CET} = C + (Mn/6) + (Si/24) + (Cr/5) + (Ni/40) +(Mo/4) + (V/14) **Pcm**{AWS} = C+Si/30+Mn/20+Cu/20+Ni/60+Cr/20+mo/15+V/10+5B
I {ASTM G101}= 26.01(Cu)+3.88(Ni)+1.20(Cr)+1.49(Si)+17.29(P)-7.29(Cu)(Ni)-9.10(Ni)(P)-33.39(Cu²)

I hereby certify that the material described herein has been made to the applicable specification by the electric arc furnace/continuous cast process and tested in accordance with the requirements of American Bureau of Shipping Rules with satisfactory results.

Signed:

ABS CERTIFICATION

I hereby certify that the content of this report are accurate and correct. All tests and operations performed by this material manufacturer are in compliance with the requirements of the material specifications and applicable purchaser designated requirements.

Signed: **Yury Krotov**
Manager of Product Quality and Process Improvement

Form F-6100-002-054 rev 6

State of Indiana, County of Whitley Sworn to and subscribed before me

this _____ day of _____

Signed: _____ My commission expires: _____
Notary Public

ASTM A6 - 14.6: A signature is not required on the test report; however, the document shall clearly identify the organization submitting the report. Notwithstanding the absence of a signature, the organization submitting the report is responsible for the content of the report

CERTIFIED MILL TEST REPORT

Steel Dynamics, Inc.®
Structural and Rail Division • Columbia City, Indiana
(260) 625-8100 (260) 625-8950 FAX

Quality Steel 100% EAF Melted and Manufactured in the USA
Recycled content: PC = 92.1%, PI = 5.7%
ISO 9001:2008 and ABS Certified

Ship to:
JD FIELDS
c/o Aliquippa Terminals
100 Woodlawn Road
Aliquippa PA, 15001 US
Attn: Janet Davis

Customer # 000076

Bill to:
JD FIELDS
P.O. Box 134401
Houston TX, 77219 US
Attn: Alice Perez

Printed: **05 / 26 / 2013**
Produced: **03 / 22 / 2013**

GENERAL INFORMATION

Product H-Piling
Size HP14X89
HP 360 x 132
Heat Number B084134
Condition(s) As-Rolled
Fine Grained
Fully Killed
No Weld Repair

SPECIFICATIONS

Standards	Grades
ASTM A6/A6M - 12	
» ASTM A572/A572M - 12	A572 gr50/gr345
ASTM A709/A709M - 11	A709 gr50/gr345
AASHTO M270M/M270 - 11	M270 gr345/gr50
ASTM A36/A36M - 08	A36 / A36M
ASTM A992/A992M - 11	A992 / A992M
CSA G40.21-04	44W/300W

SHIPMENT DETAILS

BOL # 0000285219 - 74760.00 lbs

Bundle / ASN #	Length	pcs	Cust PO | Recv PO | Job
021802314	60' 0"	2	STK-55928
021802315	60' 0"	2	STK-55928
021802316	60' 0"	2	STK-55928 GUILFORD
021802317	60' 0"	2	STK-55928
021802318	60' 0"	2	STK-55928
021802319	60' 0"	2	STK-55928
021802325	60' 0"	2	STK-55928

CHEMICAL ANALYSIS (weight percent)

C	Mn	P	S	Si	Cu	Ni	Cr	Mo	Sn	V	Nb/Cb	Al	N	B	*C1	*C2	*C3	*PC	*I	Analysis Type
.075	1.30	.016	.020	.25	.24	.06	.12	.028	.009	.044	<.001	<.001	.0107	.0005	.35	.39	.34	.18	5.18	Heat

MECHANICAL TESTING

Test	Yield (fy) Strength ksi / MPa	Tensile (fu) Strength ksi / MPa	fy / fu ratio	% Elong. {8" gage}
1	60 / 413	75 / 515	.80	24
2	63 / 432	76 / 523	.83	26
3				
4				

Charpy Impact Tests (available only when specified at time of order)

Temp F / C	Absorbed Energy ft-lbf / J Specimen 1	Specimen 2	Specimen 3	Average	Minimum

Notes: *Calculated Chemistry Values: Carbon Equivalents (C1, C2, C3, PC), Corrosion Index (I)
CE1 {IIW}=C+Mn/6+(Cr+Mo+V)/5+(Ni+Cu)/15 **CE2** {AWS}=C+(Mn+Si)/6+(Cr+Mo+V)/5+(Ni+Cu)/15 **CE3** {CET} = C + (Mn/6) + (Si/24) + (Cr/5) + (Ni/40) +(Mo/4) + (V/14) **Pcm**{AWS} = C+Si/30+Mn/20+Cu/20+Ni/60+Cr/20+mo/15+V/10+5B
I {ASTM G101}= 26.01(Cu)+3.88(Ni)+1.20(Cr)+1.49(Si)+17.29(P)-7.29(Cu)(Ni)-9.10(Ni)(P)-33.39(Cu²)

I hereby certify that the material described herein has been made to the applicable specification by the electric arc furnace/continuous cast process and tested in accordance with the requirements of American Bureau of Shipping Rules with satisfactory results.

Signed:

ABS CERTIFICATION

I hereby certify that the content of this report are accurate and correct. All tests and operations performed by this material manufacturer are in compliance with the requirements of the material specifications and applicable purchaser designated requirements.

Signed: **Yury Krotov**
Manager of Product Quality and Process Improvement

Form F-6100-002-054 rev 6

State of Indiana, County of Whitley Sworn to and subscribed before me

this _____ day of _____

Signed: _____ My commission expires: _____
Notary Public

ASTM A6 - 14.6: A signature is not required on the test report; however, the document shall clearly identify the organization submitting the report. Notwithstanding the absence of a signature, the organization submitting the report is responsible for the content of the report

R.B. RENAUD BROS. INC.
STEEL SALES & FABRICATION
VERNON VT. USA
283 FT. BRIDGMAN RD. VERNON VT., 05354
PH. (802)257-7383 FAX (802)257-7308

WELDING PROCEDURE

NO. RB-GW-001

DATE:	4/8/2014	PROJECT NAME:	GUILFORD
BY:	A. DUNKLEE	PROJECT NO.	BRO 1442(36)
AWS CODE:		PQR REF. NO:	N/A

MATERIAL SPECIFICATION:	ASTM 709 GR. 36-50
WELDING PROCESS:	SMAW
MANUAL, SEMI-AUTOMATIC OR AUTOMATIC:	MANUAL
WELDING POSITION:	1G
FILLER METAL SPECIFICATION:	ANSI/AWS A5.1-A5.5
FILLER METAL CLASSIFICATION:	E7018
FLUX:	N/A
SHIELDING GAS:	N/A — FLOW RATE: N/A
SINGLE OR MULTIPLE PASS:	MULTIPLE
SINGLE OR MULTIPLE ARC:	SINGLE
WELDING CURRENT:	DC
WELDING POLARITY:	ELECTRODE POSITIVE
WELDING PROGRESSION:	N/A
ROOT TREATMENT:	REMOVE ALL IMPURITIES & GALV.
PREHEAT & INTERPASS TEMPERATURE:	$\geq 1\frac{1}{2}$"=70°F $1\frac{1}{2}$"-$2\frac{1}{2}$"=150°F OVER $2\frac{1}{2}$"=225°F
POSTHEAT TREATMENT:	N/A
HEAT INPUT:	MIN: N/A MAX: N/A
ELECTRODE STICKOUT:	N/A

Vermont Agency of Transportation
RECEIVED
Guilford(36)PileSubmittal.pdf
CK'D BY MJC OK'D BY JWC
May 30, 2014
RESUBMIT No Approved
BY M. J. Chenette DATE 06/05/2014

APPROVAL STAMP

PASS NO.	ELECTRODE SIZE:	WELDING CURRENT AMPS	WELDING CURRENT VOLTS	TRAVEL SPEED
AS REQ.	3/32"	70-110		ADJUST AS REQ.
	1/8"	70-170		

NOTES:
MIN. WELD SIZE- 5/16"
GRIND ALL BURRS, ENSURE FLUSH POINT FIT.
PILE GRADE: A572-50

JOINT DETAIL: HP14X89 PILE POINT

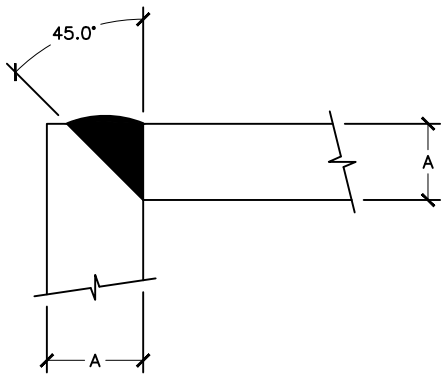

A- VARIES (ADJUST PREHEAT TEMP AS REQ.)

C:\Users\ADunklee\Documents\WorkDocuments\WELDING PROCEDURES\RB-FW-001.dwg, 4/8/2014 10:57:14 AM

R.B. RENAUD BROS. INC.
STEEL SALES & FABRICATION
VERNON VT. USA
283 FT. BRIDGMAN RD. VERNON VT., 05354
PH. (802)257-7383 FAX (802)257-7308

WELDING PROCEDURE

NO. RB-FW-001

DATE:	4/8/2014	PROJECT NAME:	GUILFORD
BY:	A. DUNKLEE	PROJECT NO.	BRO 1442(36)
AWS CODE:		PQR REF. NO:	N/A

MATERIAL SPECIFICATION:	ASTM 572 GR. 50
WELDING PROCESS:	SMAW
MANUAL, SEMI-AUTOMATIC OR AUTOMATIC:	MANUAL
WELDING POSITION:	ALL
FILLER METAL SPECIFICATION:	ANSI/AWS A5.1-A5.5
FILLER METAL CLASSIFICATION:	E7018
FLUX:	N/A
SHIELDING GAS:	N/A
SINGLE OR MULTIPLE PASS:	MULTIPLE
SINGLE OR MULTIPLE ARC:	SINGLE
WELDING CURRENT:	DC
WELDING POLARITY:	ELECTRODE POSITIVE
WELDING PROGRESSION:	N/A
ROOT TREATMENT:	REMOVE ALL IMPURITIES & GALV.
PREHEAT & INTERPASS TEMPERATURE:	$\geq 1\frac{1}{2}$"=70°F $1\frac{1}{2}$"-$2\frac{1}{2}$"=150°F OVER $2\frac{1}{2}$"=225°F
POSTHEAT TREATMENT:	N/A
HEAT INPUT:	MIN: N/A MAX: N/A
ELECTRODE STICKOUT:	N/A

Vermont Agency of Transportation
RECEIVED
Guilford(36)PileSubmittal.pdf
CK'D BY MJC OK'D BY JWC
May 30, 2014
RESUBMIT No Approved
BY M. J. Chenette DATE 06/05/2014

APPROVAL STAMP

PASS NO.	ELECTRODE SIZE:	WELDING CURRENT AMPS	WELDING CURRENT VOLTS	TRAVEL SPEED
AS REQ.	3/32"	70-110		ADJUST AS REQ.
	1/8"	70-170		

NOTES:
- ALL MATERIAL TO BE A572 GR. 50
- PILE CAP SIZE: 1"X14"X14"
- GRIND SURFACES FLAT AND SMOOTH PRIOR TO WELDING

JOINT DETAIL: HP 14X89 PILE CAP

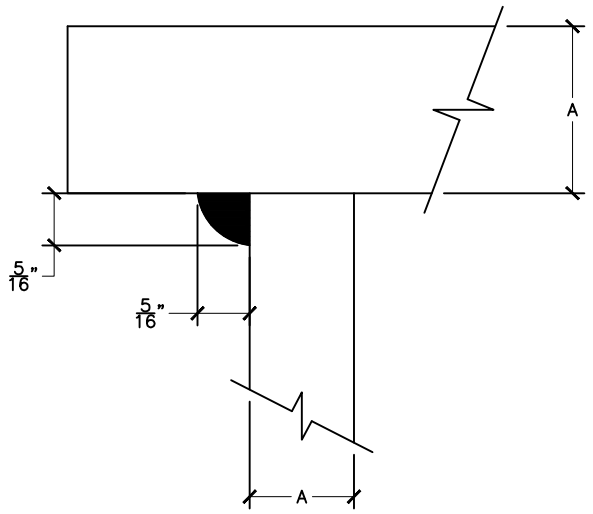

A- VARIES (ADJUST PREHEAT TEMP AS REQ.)

C:\Users\ADunklee\Documents\WorkDocuments\WELDING PROCEDURES\RB-FW-001.dwg, 4/8/2014 10:57:14 AM

RENAUD BROS. INC. STEEL SALES & FABRICATION VERNON VT. USA	WELDING PROCEDURE	NO. SPLICE DETAIL	SHEET: 3 OF 4
	DATE: 4/8/2014	PROJECT NAME: GUILFORD	
	BY: A. DUNKLEE	PROJECT NO. BRO 1442(36)	
283 FT. BRIDGMAN RD. VERNON VT., 05354 PH. (802)257-7383 FAX (802)257-7308	AWS CODE:	PQR REF. NO: N/A	

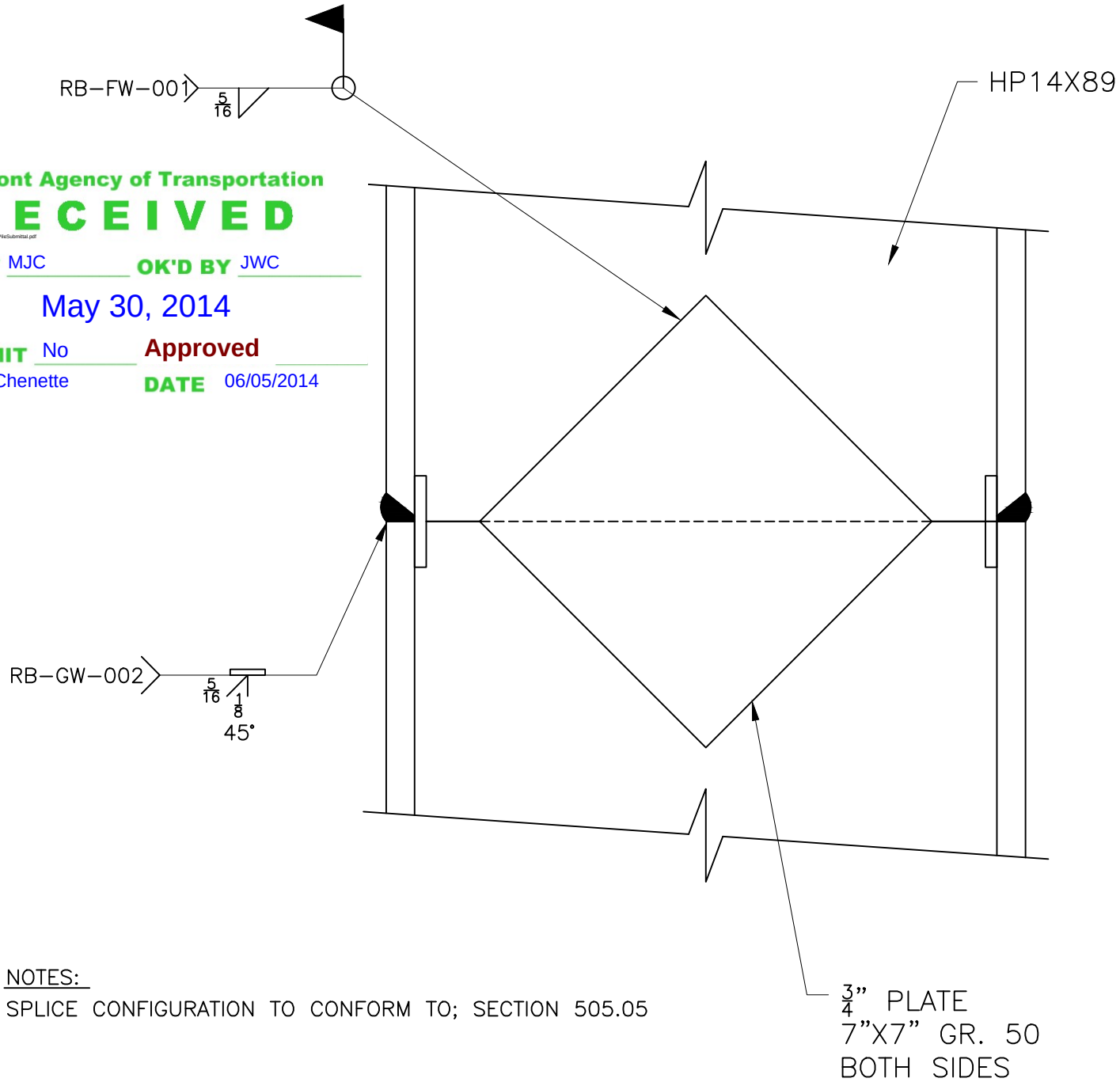

Vermont Agency of Transportation
RECEIVED
Guilford(36)PikeSubmittal.pdf
CK'D BY MJC OK'D BY JWC
May 30, 2014
RESUBMIT No Approved
BY M. J. Chenette DATE 06/05/2014

NOTES:

SPLICE CONFIGURATION TO CONFORM TO; SECTION 505.05

C:\Users\ADunklee\Documents\WorkDocuments\WELDING PROCEDURES\RB-FW-001.dwg, 4/8/2014 1

R.B.I. RENAUD BROS. INC.
STEEL SALES & FABRICATION
VERNON VT. USA
283 FT. BRIDGMAN RD. VERNON VT., 05354
PH. (802)257-7383 FAX (802)257-7308

WELDING PROCEDURE

NO. RB-GW-002

DATE:	4/8/2014	PROJECT NAME:	GUILFORD
BY:	A. DUNKLEE	PROJECT NO.	BRO 1442(36)
AWS CODE:		PQR REF. NO:	N/A

MATERIAL SPECIFICATION:	ASTM 572 GR. 50
WELDING PROCESS:	SMAW
MANUAL, SEMI-AUTOMATIC OR AUTOMATIC:	MANUAL
WELDING POSITION:	2G
FILLER METAL SPECIFICATION:	ANSI/AWS A5.1-A5.5
FILLER METAL CLASSIFICATION:	E7018
FLUX:	N/A
SHIELDING GAS:	N/A — FLOW RATE: N/A
SINGLE OR MULTIPLE PASS:	MULTIPLE
SINGLE OR MULTIPLE ARC:	SINGLE
WELDING CURRENT:	DC
WELDING POLARITY:	ELECTRODE POSITIVE
WELDING PROGRESSION:	N/A
ROOT TREATMENT:	REMOVE ALL IMPURITIES & GALV.
PREHEAT & INTERPASS TEMPERATURE:	$\geq 1\frac{1}{2}$"=70°F $1\frac{1}{2}$"-$2\frac{1}{2}$"=150°F OVER $2\frac{1}{2}$"=225°F
POSTHEAT TREATMENT:	N/A
HEAT INPUT:	MIN: N/A MAX: N/A
ELECTRODE STICKOUT:	N/A

Vermont Agency of Transportation
RECEIVED
Guilford(36)PlanSubmittal.pdf
CK'D BY MJC OK'D BY JWC
May 30, 2014
RESUBMIT No Approved
BY M. J. Chenette DATE 06/05/2014

APPROVAL STAMP

PASS NO.	ELECTRODE SIZE:	WELDING CURRENT AMPS	WELDING CURRENT VOLTS	TRAVEL SPEED
AS REQ.	3/32"	70-110		ADJUST AS REQ.
	1/8"	70-170		

NOTES:
ALL MATERIAL TO BE A572 GR. 50
ROOT OPENING- 1/8" MIN.
1/4"X2" BACKING STRIP

JOINT DETAIL: HP 14X89 PILE SPLICE

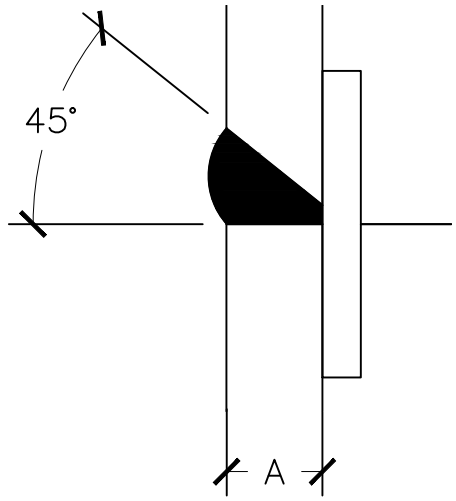

A- VARIES (ADJUST PREHEAT TEMP AS REQ.)

C:\Users\ADunklee\Documents\WorkDocuments\WELDING PROCEDURES\RB-FW-001.dwg, 4/8/2014 10:57:15 AM