REVISIONS					
ZONE	REV	DESCRIPTION	REVISED BY	DATE	APPROVED
--	A	PER ENGINEERS MARKS	EG	1/27/15	BF

BRF 0281(25)

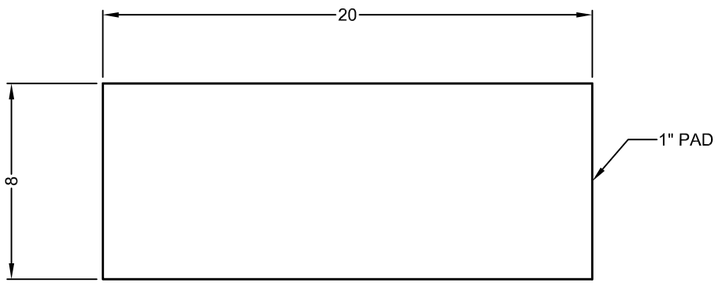

PLAN PAD PLAN VIEW

QTY. REQ'D. = 12

AASHTO GRADE 50 DUROMETER

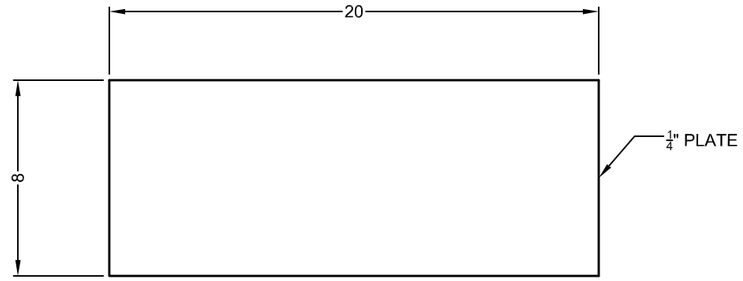

GALVANIZED SHIM PLATE PLAN VIEW

QTY. REQ'D. = 12

A ASTM A709 GR50

NOTES:

1. MANUFACTURING FACILITY LOCATION:
   AMSCOT STRUCTURAL PRODUCTS CORP.
   241 E. BLACKWELL STREET
   DOVER, N.J. 07801
   CONTACT- PETER SOMOGYI
   PH: 973-989-8800
   FAX: 973-989-5651
2. ALL BEARING PADS TO BE MANUFACTURED IN ACCORDANCE WITH AASHTO SECTION 18. THE ELASTOMER SHALL BE GRADE 3 NATURAL RUBBER WITH A DUROMETER HARDNESS OF 50 ± 5, WITH A SHEAR MODULUS OF 110 PSI ± 15%.
3. ALL DIMENSIONS ARE IN INCHES , UNLESS OTHERWISE NOTED.
4. TOLERANCES: THICKNESS -0 +1/8
   PLAN -0 +1/8

Inspection Block
Initial Dim. Check
Sign:_____Date:_____
In Process Dim. Chk.
Sign:_____Date:_____
100% Visual Weld Insp.
Sign:_____Date:_____
Paint Insp.(see form)
Sign:_____Date:_____
Final Inspection
Sign:_____Date:_____

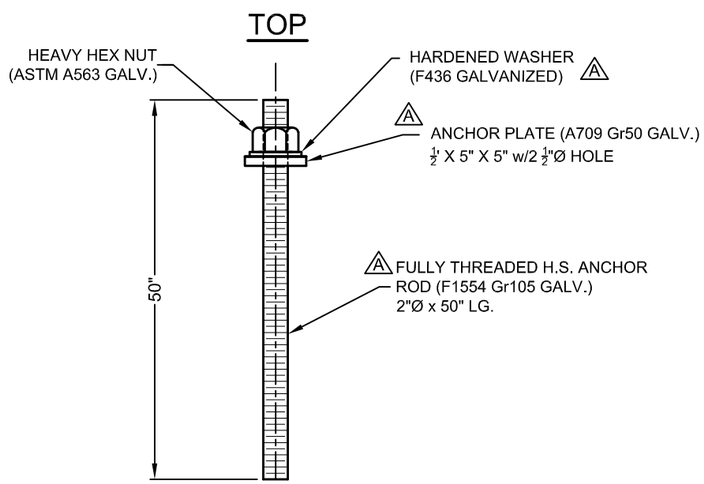

ANCHOR BOLT DETAIL

QTY. REQ'D = 32 ASSY.

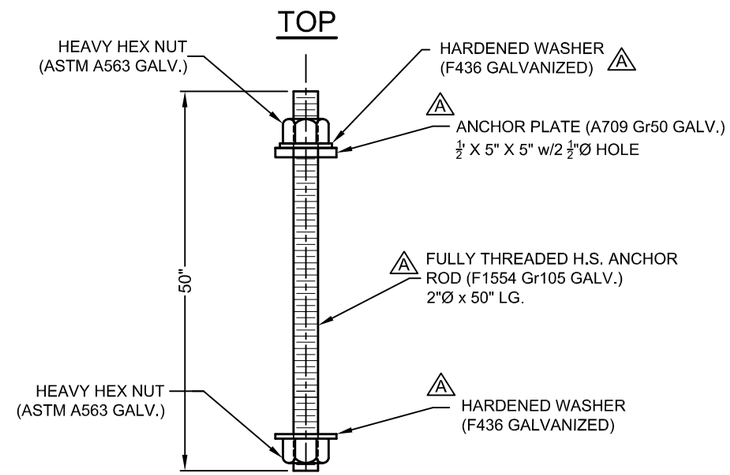

ANCHOR BOLT DETAIL

QTY. REQ'D = 16 ASSY.

A AT PILE CAVITY LOCATIONS ONLY

Vermont Agency of Transportation
RECEIVED
Fairfield BRF0281(25) Bearing Submittal 1-29-2015_review.pdf

CK'D BY RK OK'D BY RY

January 29, 2015

RESUBMIT No Approved

BY RY DATE 02/10/2015

FAIRFIELD
BRF 0281(25)
VERMONT AGENCY OF TRANSPORTATION

FEDERAL PROJECT NO. :

CONTRACT NO. : PIN NO. :

ELASTOMERIC PAD, SHIM & ANCHOR BOLT DETAILS

AMSCOT
STRUCTURAL PRODUCTS CORP.

SCALE: N.T.S.	APPRV'D:	DRAWN BY: E.J.G.
DATE: 1/13/15	BF	REVISION: A

FOR: A.L. ST. ONGE

DWG NO: ASO15A1RA | SHEET 1 OF 2