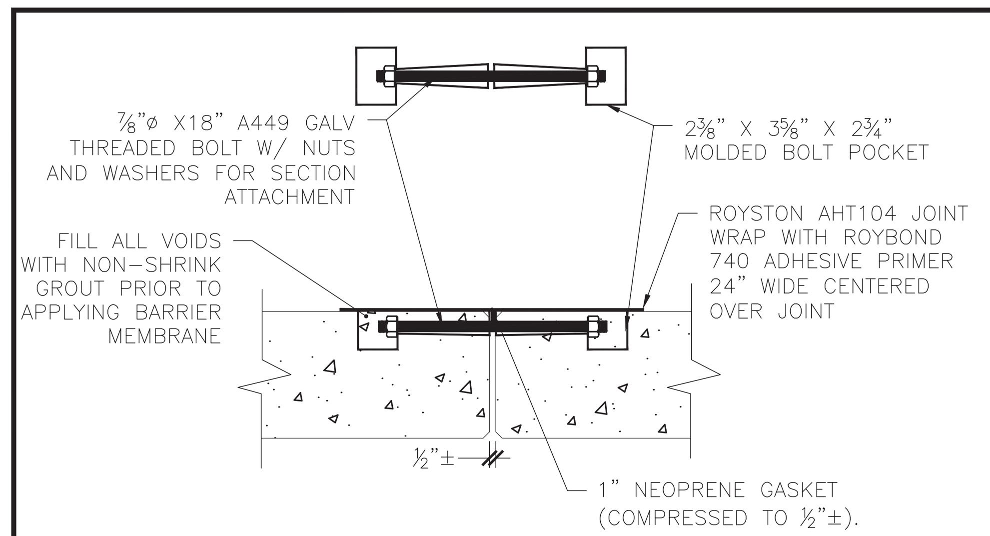

1 / S1.0 ARCH CULVERT JOINT CONNECTION DETAIL
1" = 1'-0"

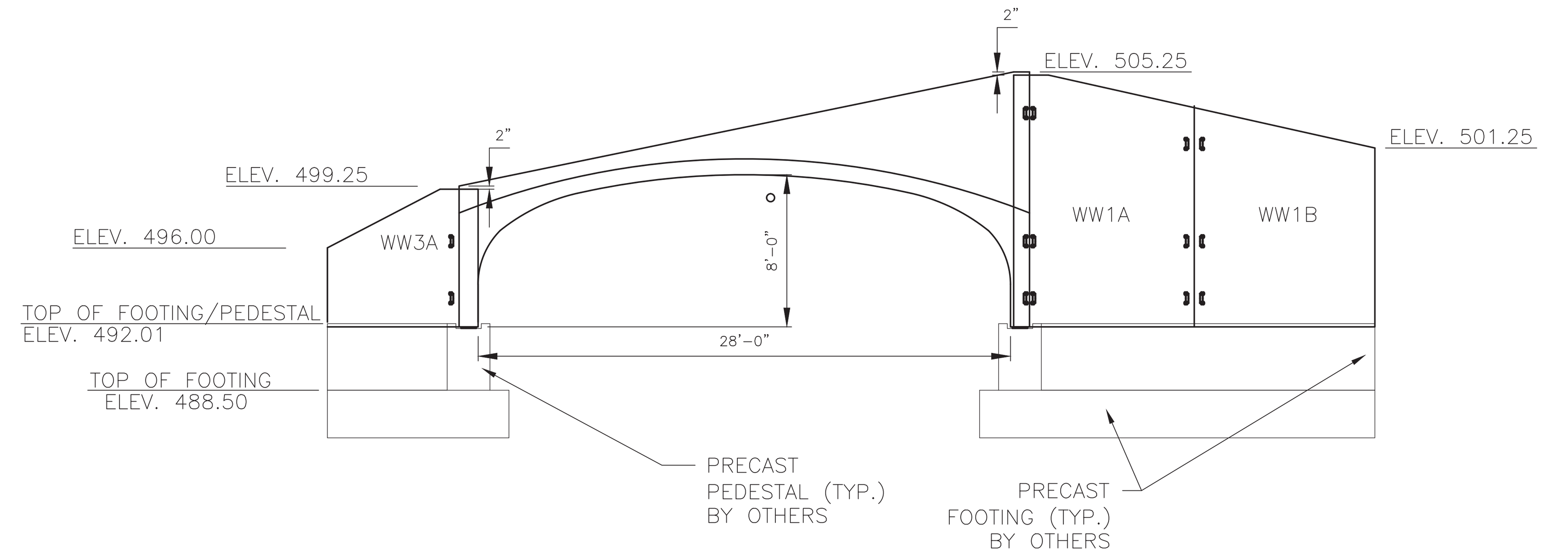

2 / S1.0 CULVERT LAYOUT ELEVATION INLET VIEW
1/8" = 1'-0"

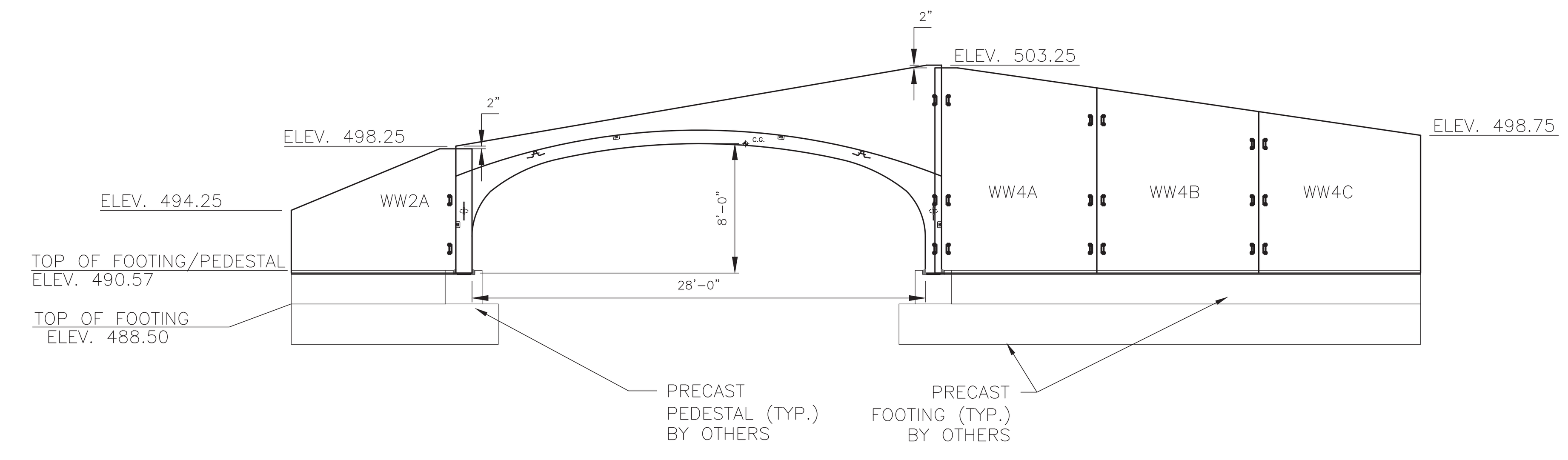

3 / S1.0 CULVERT LAYOUT ELEVATION OUTLET VIEW
1/8" = 1'-0"

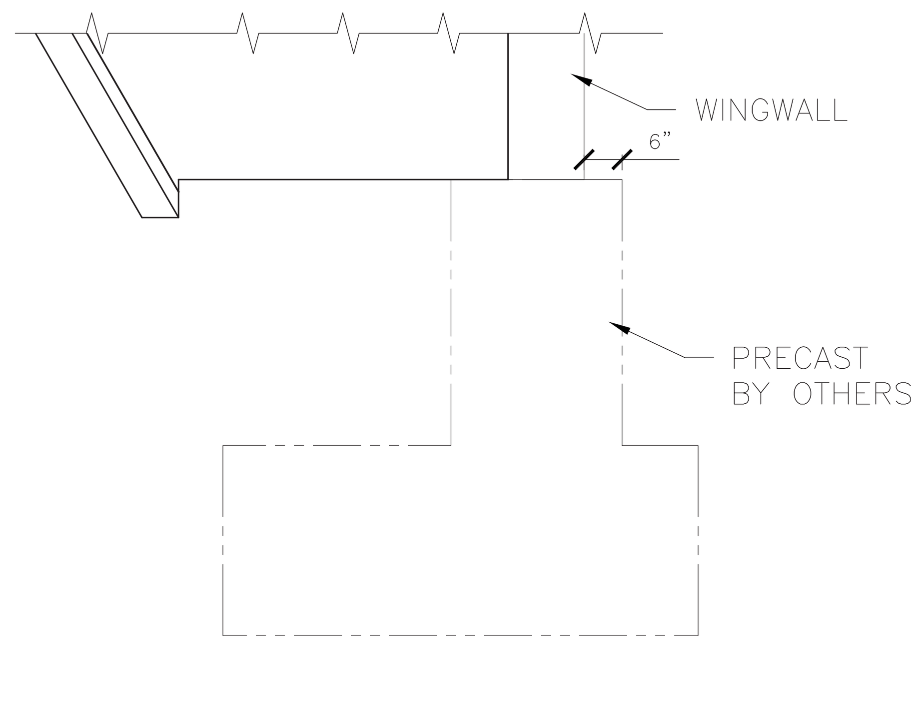

4 / S1.0 WING WALL FOOTING SECTION
3/16" = 1'-0"

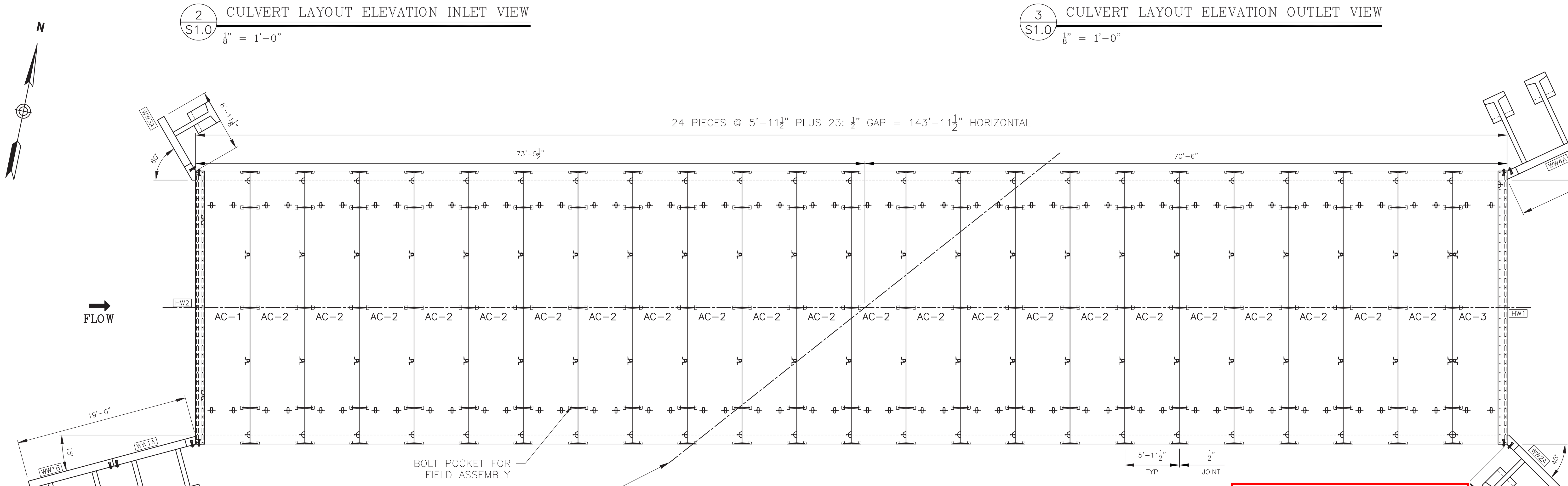

5 / S1.0 CULVERT LAYOUT PLAN VIEW
3/16" = 1'-0"

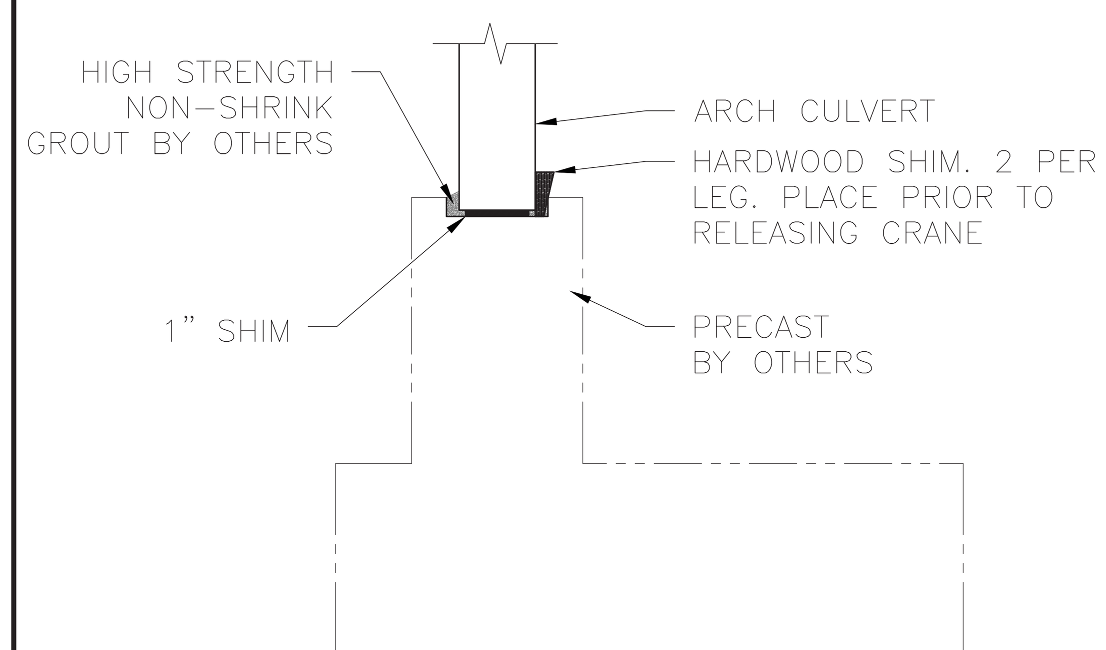

6 / S1.0 CULVERT FOOTING SECTION
3/16" = 1'-0"

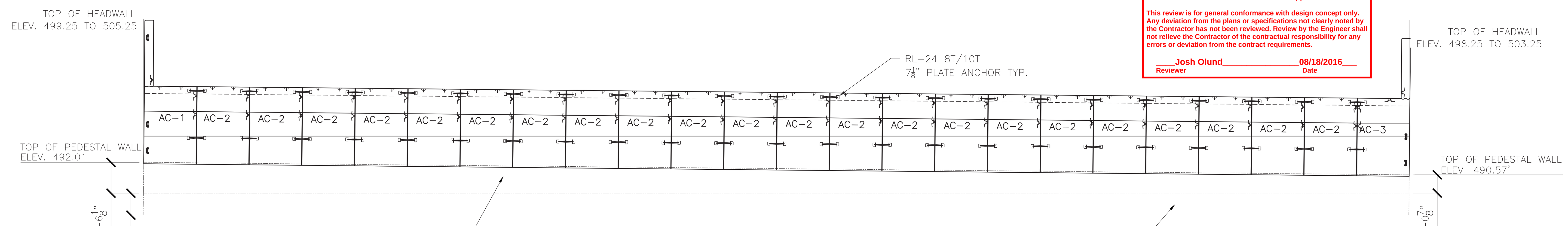

7 / S1.0 CULVERT LAYOUT ELEVATION VIEW
3/16" = 1'-0"

TY·LIN INTERNATIONAL
The stamped documents are hereby:
____ Approved
_X_ Approved as noted
____ Revise and resubmit
See transmittal for additional information as applicable.
This review is for general conformance with design concept only. Any deviation from the plans or specifications not clearly noted by the Contractor has not been reviewed. Review by the Engineer shall not relieve the Contractor of the contractual responsibility for any errors or deviation from the contract requirements.
Josh Olund — Reviewer; 08/18/2016 — Date

Design of lifting attachments in accordance with Subsections 540.04(h) and 105 is outstanding at this time. However, fabrication in accordance with these plans may proceed at the Fabricator's option with future submittal of the lifting device calculations.

Vermont Agency of Transportation
RECEIVED
CK'D BY TYLIN OK'D BY JMF
August 15, 2016
RESUBMIT No — Approved AsNoted
BY Jennifer Fitch DATE 08/18/2016

FOOTING NOTES:
BY OTHERS

LIST OF SHEETS:
S1.0 CULVERT LAYOUT-PLAN AND ELEVATION
S2.0 CULVERT SECTION AND ELEVATION
S3.0 CULVERT SECTIONS AND ELEVATIONS
S4.0 HEAD WALL DETAILS
S5.0 WINGWALL DETAILS
S6.0 WINGWALL DETAILS
S7.0 ANCHOR DETAILS
S8.0 LIFTING DETAILS

GENERAL NOTES:

1. THE PLANS ARE INTENDED TO BE DRAWN TO SCALE. HOWEVER, IF A CRITICAL DIMENSION IS NOT PROVIDED, MICHIE CORPORATION SHOULD BE CONTACTED FOR VERIFICATION.

2. IF ANY OF THE WORK TO BE DONE AS SHOWN ON THE DRAWINGS DOES NOT CORRESPOND WITH THE EXISTING FIELD CONDITIONS, CONTACT THE ENGINEER PRIOR TO PROCEEDING WITH THE WORK IN QUESTION.

3. FIELD-VERIFY ALL ELEVATIONS PRIOR TO THE START OF CONSTRUCTION. IF THERE ARE ANY DISCREPANCIES, CONSULT THE ENGINEER PRIOR TO PROCEEDING WITH THE WORK IN QUESTION.

4. MAINTAIN MINIMUM 60 DEGREE SLING ANGLE WHEN HANDLING PRECAST COMPONENTS.

5. PRECAST COMPONENTS SHALL REACH A MINIMUM COMPRESSIVE STRENGTH OF 3,000 PSI PRIOR TO STRIPPING, AND THE MINIMUM DESIGN COMPRESSIVE STRENGTH PRIOR TO SHIPPING, UNLESS OTHERWISE DIRECTED BY THE ENGINEER.

6. HORIZONTAL JOINTS AND VOIDS SHALL BE FILLED WITH NON-SHRINK GROUT.

7. SHOP DRAWINGS WERE DEVELOPED USING THE FOLLOWING RESOURCES FOR THE CONTRACT:
- "TOWN OF DUXBURY, DUXBURY, VERMONT, VT100 ROAD CULVERT PROJECT PLANS.

8. IF THERE IS ADDITIONAL INFORMATION PERTINENT TO THE FABRICATION AND INSTALLATION OF THESE UNITS THAT IS NOT CONTAINED WITHIN THE RESOURCES LISTED ABOVE IT SHALL BE BROUGHT TO THE ATTENTION OF MICHIE CORPORATION. FAILURE TO MAKE SUCH ADDITIONAL INFORMATION AVAILABLE SHALL RELIEVE MICHIE CORPORATION OF ALL LIABILITIES ARISING FROM ERRORS OR OMISSIONS RELATED TO THE OMITTED INFORMATION.

9. ALL VOIDS SHALL BE FILLED WITH NON SHRINK GROUT.

ARCH CULVERT NOTES:

1. ARCH CULVERT SECTIONS ARE DESIGNED IN ACCORDANCE WITH
- AASHTO "LRFD BRIDGE DESIGN SPECIFICATIONS", 6TH EDITION.
- STANDARD SPECIFICATION AND GENERAL SPECIAL PROVISIONS SECTION 540.

2. THE FOLLOWING CRITERIA WAS USED FOR DESIGN:
- LIVE LOAD: HL-93
- EARTH COVER: 8.6 FEET
- BACKFILL SOIL UNIT WEIGHT: 140 PCF
- BACKFILL SOIL FRICTION ANGLE: 30 DEGREES
- CONCRETE STRENGTH: 6,500 PSI
- STEEL YIELD STRENGTH: 60,000 PSI

3. ARCH CULVERT AND HEADWALL CONCRETE SHALL BE SELF-CONSOLIDATING CONFORMING TO SECTION 540 WITH A MINIMUM 28-DAY COMPRESSIVE STRENGTH OF 6,000 PSI. AGGREGATE SHALL CONFORM TO SECTION 540 WITH A MAXIMUM DIAMETER OF 3/4". CEMENT SHALL CONFORM TO ASTM C150. MICHIE MIX 6535CAS [6,500 psi]

4. REINFORCING SHALL BE GRADE 60, EPOXY COATED, CONFORMING TO ASTM A-615. ALL BARS SHALL BE BENT COLD.

5. ALL EXPOSED EDGES EXCEPT WHERE NOTED SHALL BE CHAMFERED 3/4".

6. SUBGRADE PREPARATION SHALL CONFORM TO PROJECT PLANS.

7. UNLESS OTHERWISE SPECIFIED IN THE CONTRACT DOCUMENTS, BACKFILL SHALL CONFORM TO VTRANS SECTION 708.04 GRANULAR BACKFILL FOR STRUCTURES. BACKFILL SHALL EXTEND BEYOND THE HORIZONTAL LIMITS OF THE STRUCTURE AS DETAILED IN THE CONTRACT DOCUMENTS. PLACEMENT SHALL CONFORM TO VTRANS SECTION 204.08.

8. EXPOSED SURFACES SHOULD BE COATED ONSITE WITH WATER REPELLENT, SILANE (SUPPLIED BY OTHERS).

9. EACH SECTION SHALL BE PROVIDED WITH BOLT POCKETS FOR ATTACHMENT TO ADJACENT SECTIONS. 7/8" DIA. GALV. THREADED ROD, WASHERS AND NUTS SHALL BE PROVIDED FOR ASSEMBLY IN THE FIELD. CLOSED-CELL NEOPRENE JOINT SEALANT SHALL BE USED IN ALL JOINTS UNLESS NOTED OTHERWISE.

10. 2FT WIDE ROYSTON JOINT WRAP WITH ADHESIVE PROVIDED BY MICHIE CORP, INSTALLED BY OTHERS, CENTER ON JOINT AFTER HORIZONTAL GROUTING. BARRIER MEMBRANE PROVIDED AND INSTALLED BY OTHERS OVER TOP OF STRUCTURE, AND DOWN SIDES TO 6" BELOW HORIZONTAL JOINT.

WING WALL NOTES:

1. SECTIONS ARE DESIGNED IN ACCORDANCE WITH
- AASHTO "LRFD BRIDGE DESIGN SPECIFICATIONS", 6TH EDITION
- STANDARD SPECIFICATION AND GENERAL SPECIAL PROVISIONS SECTION 540.

2. THE FOLLOWING SOIL PROPERTIES WERE USED IN THE DESIGN:

	SOIL WEIGHT [PCF]	FRICTION ANGLE [DEG]
• RETAINED SOIL	140	32
• FOUNDATION SOIL	140	32

- LIVE LOAD SURCHARGE = 2'
- BACKSLOPE ANGLE: ±8:1
- ALLOWABLE BEARING RESISTANCE = 6,000 PSF

3. CONCRETE SHALL BE SELF-CONSOLIDATING CONFORMING TO SECTION 540 WITH A MINIMUM 28-DAY COMPRESSIVE STRENGTH OF 4,000 PSI. AGGREGATE SHALL CONFORM TO SECTION 540 WITH A MAXIMUM DIAMETER OF 3/4". CEMENT SHALL CONFORM TO ASTM C150. MICHIE MIX 5035CAS.

4. REINFORCING SHALL BE GRADE 60, EPOXY COATED, CONFORMING TO ASTM A-774. ALL BARS SHALL BE BENT COLD.

5. ALL EXPOSED EDGES EXCEPT WHERE NOTED SHALL BE CHAMFERED 3/4".

6. UNLESS OTHERWISE SPECIFIED IN THE CONTRACT DOCUMENTS, BACKFILL SHALL CONFORM TO VTRANS SECTION 708.04 GRANULAR BACKFILL FOR STRUCTURES. BACKFILL SHALL EXTEND BEYOND THE HORIZONTAL LIMITS OF THE STRUCTURE AS DETAILED IN THE CONTRACT DOCUMENTS. PLACEMENT SHALL CONFORM TO VTRANS SECTION 204.08

CURING

1. THIS SECTION APPLIES TO ALL PRECAST PIECES CAST IN EACH RESPECTIVE LOT. AS SOON AS PRACTICAL AFTER CASTING, AND ONCE THE STRIPPING STRENGTH HAS BEEN ACHIEVED, THE PIECES WILL BE REMOVED FROM THE FORM AND PLACED ON FLAT BED TRAILERS. THE PIECES WILL THEN BE MOVED TO YARD STORAGE UNTIL DESIGN STRENGTH IS MET AND THEY CAN BE STAGED FOR SHIPPING/STORING.

FINISH

1. ALL PRECAST COMPONENTS WILL HAVE A STEEL FORM FINISH ON THE VISIBLE FACES. THE BURIED SIDE OF THE WINGWALLS AND CURBWALLS WILL BE THE POUR FACE AND WILL HAVE A STEEL TROWEL FINISH. THE ARCH SECTIONS WILL HAVE A STEEL FORM FINISH ON ALL FACES EXCEPT ONE END FOR POURING, THIS END WILL HAVE A STEEL TROWEL FINISH.
2. ANY AND ALL REPAIR PROCEDURES WILL ADHERE TO NPCA BEST PRACTICES, AND WILL BE GENERATED SPECIFICALLY FOR THE APPLICATION AT THE TIME OF NEED.

HANDLING/STORAGE

1. ONCE STRIPPING STRENGTH HAS BEEN ACHIEVED, ALL PRECAST COMPONENTS WILL BE REMOVED FROM THE FORMS USING OVERHEAD CRANES. THE PIECES WILL THEN BE PLACED ON FLATBED TRAILERS AND TRANSPORTED TO THE STORAGE YARD WHERE THEY WILL EITHER BE PLACED ON DUNNAGE (WINGWALLS) OR DIRECTLY ON THE GROUND (CULVERT). ONCE DESIGN STRENGTH HAS BEEN MET THEY WILL BE HANDLED USING THE INDICATED LIFTERS/ANCHORS AND APPROPRIATE RIGGING, IN PREPARATION FOR SHIPPING ON FLAT BED TRAILERS. PLACEMENT OF THE DUNNAGE WILL GENERALLY FOLLOW THE ¼ RULE OR BE PLACED UNDER THE LIFTERS, HOWEVER FINAL DECISIONS REGARDING PLACEMENT WILL BE THAT OF THE MANUFACTURER/DESIGNER.

PRODUCTION CONTROL PROCEDURES

1. CYLINDER SAMPLING AND CURING:
A. A MINIMUM OF EIGHT (8) CYLINDERS PER LOT WILL BE MADE IN ACCORDANCE WITH ASTM C31. CYLINDERS WILL BE TESTED IN ACCORDANCE WITH ASTM C39.
B. UNIT WEIGHT (ASTM C138), AIR CONTENT (ASTM C231), SPREAD PER SCC GUIDELINES, AND TEMPERATURE TESTS WILL BE TAKEN INITIALLY FOR EACH BATCH. NOT TO EXCEED NINE (9) CUBIC YARDS. THE FREQUENCY OF SOME TESTS MAY BE REDUCED WHEN THE VTRANS REPRESENTATIVE DETERMINES THAT THE PRECASTER IS CONSISTENT IN HIS BATCHING OPERATION. THESE TESTS WILL BE TAKEN PRIOR TO PLACING CONCRETE IN FORM.

NOTE: 1 AIR TEST PER BATCH (OR DELIVERY TRUCK) IS REQUIRED, AND SHALL NOT BE REDUCED

C. ALL CAST CYLINDERS WILL BE CURED IN THE SAME MANNER AS THE PIECES THEY REPRESENT.

2. CYLINDER BREAKS:
A. FOR EARLY STRENGTH VERIFICATION, CYLINDERS MAY BE BROKEN AT ANY TIME UP TO 28 DAYS AFTER CASTING. IF THE AVERAGE STRENGTH OF TWO (2) CYLINDERS MEETS OR EXCEEDS THE REQUIRED 28 DAY STRENGTH (WITH EACH CYLINDER HAVING A MINIMUM OF 95% OF THE REQUIRED 28 DAY STRENGTH), THE LOT SHALL BE ACCEPTED FOR STRENGTH.

3. QUALITY CONTROL TEST AND EQUIPMENT:

CYLINDER TESTER:	FORNEY 500 SERIES WITH DR-2 DIGITAL READOUT CALIBRATED BIANNUALLY
AIR METER:	PRESSURE METER BY FORNEY (CALIBRATED MONTHLY)
SLUMP CONE:	STANDARD 8" BASE, 4" AT RIM, 12" IN HEIGHT MEASURED IN ACCORDANCE WITH SCC GUIDELINES
SCALES FOR UNIT WEIGHT:	MEASURED IN ACCORDANCE WITH ASTM C143 100 LBS. CAPACITY CALIBRATED ANNUALLY TO THE NEAREST 1/10TH POUND
CYLINDER MOLDS:	4" DIAMETER X 8" PLASTIC

4. CONCRETE TESTING AND AIR METER CALIBRATION WILL BE DONE BY PLANT PERSONNEL (ACI GRADE I CERTIFIED) ALL TESTING PRODUCERS WILL BE OBSERVED BY VERMONT INSPECTORS OR AUTHORIZED REPRESENTATIVES.

No.	Date	Revision	By

STATE OF VERMONT — DARYL D. BURNS — No. 9031 — Structural I — LICENSED PROFESSIONAL ENGINEER — 8/8/16

DESIGNED AND DETAILED BY;
DELTA
ENGINEERS, ARCHITECTS, & LAND SURVEYORS
860 HOOPER ROAD, ENDWELL, NY 13760-1564
TEL. (607) 231-6600 FAX: (607) 231-6650

VT 100 Road Culvert
Duxbury, Vermont

Culvert Layout - Plan and Elevation

Scale: AS SHOWN
Project No. 7347
Checked by:
Drawn by: GSC
Designed by: DELTA
Date: 6/29/16

PREPARED FOR ;
MICHIE
MICHIE CORPORATION, INC.
173 BUXTON INDUSTRIAL DRIVE-PO BOX 870
HENNIKER, NH 03242
PHONE: 603-428-3218
FAX: 603-428-7426

DWG NO.
S1.0

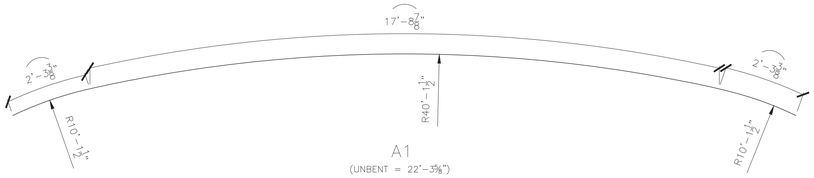

A1
(UNBENT = 22'-3⅝")

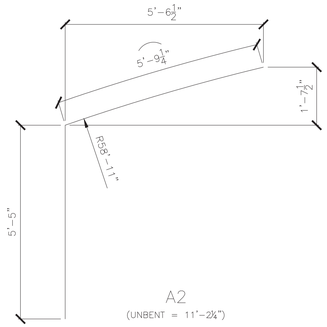

A2
(UNBENT = 11'-2¼")

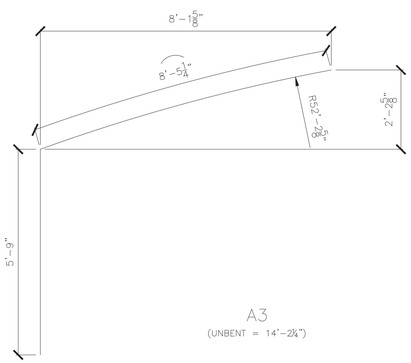

A3
(UNBENT = 14'-2¼")

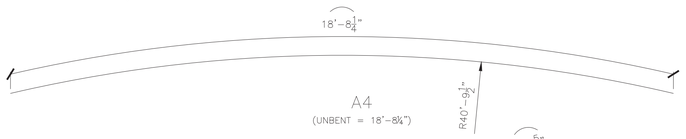

A4
(UNBENT = 18'-8¼")

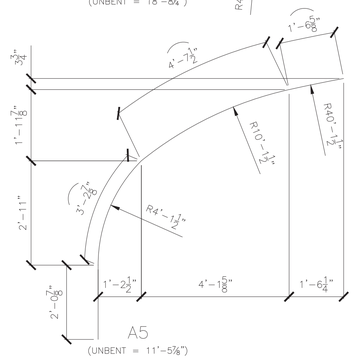

A5
(UNBENT = 11'-5⅞")

#5 DBR
(UNBENT = 2'-0")

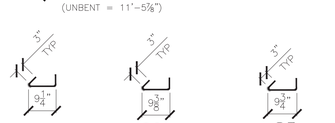

S2
(UNBENT = 1'-3⅜")

S3
(UNBENT = 1'-3¾")

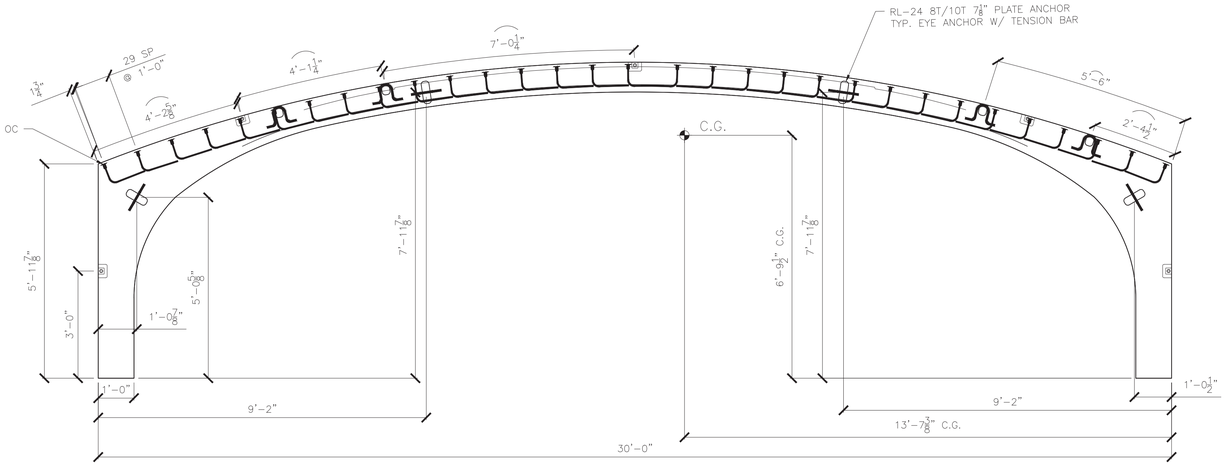

1 S2.0 ELEVATION VIEW
⅜" = 1'-0"

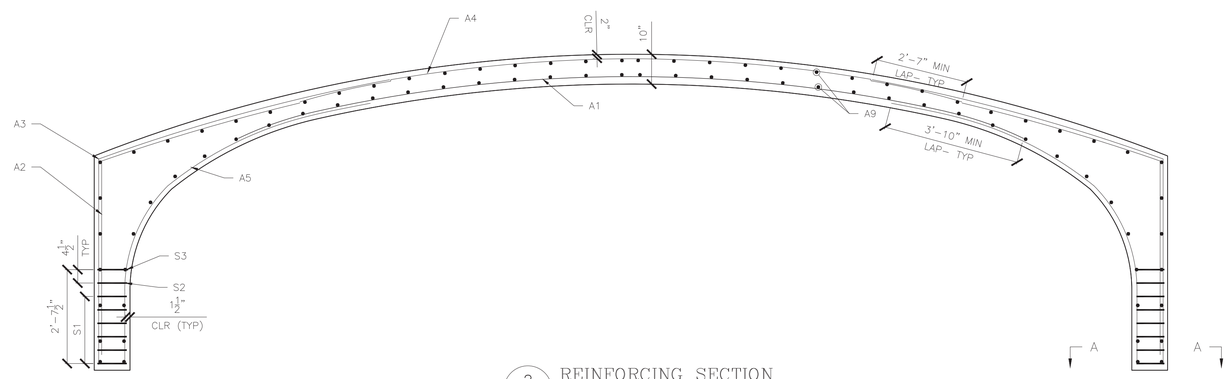

2 S2.0 REINFORCING SECTION
⅜" = 1'-0"

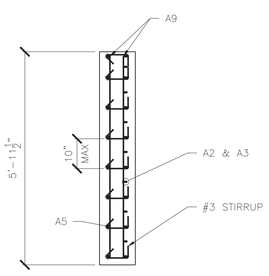

SECTION A–A

REINFORCING SCHEDULE

BAR MARK	TYPE	SIZE/SPACING	CUT LENGTH	# OF PCS
A1	RADIUS	#6@5"	22'–3⅝"	15
A2	L	#5@5"	11'–2¼"	30
A3	L	#6@5"	14'–2¼"	30
A4	RADIUS	#4@10"	18'–8¼"	8
A5	L	#6@10"	11'–5⅞"	8/LEG
A9	STRAIGHT	#4@12"	5'–7½"	84
S1	STIRRUP	#3@4½"	1'–3¼"	48/LEG
S2	STIRRUP	#3@4½"	1'–3⅜"	8/LEG
S3	STIRRUP	#3@4½"	1'–3¾"	8/LEG

Vermont Agency of Transportation
RECEIVED
AC 26x8 State of VT (stamped sub 3)7347 - TYLI Review.pdf

CK'D BY TYLIN OK'D BY JMF
August 15, 2016
RESUBMIT No Approved AsNoted
BY Jennifer Fitch DATE 08/18/2016

TYLININTERNATIONAL
The stamped documents are hereby:
____ Approved
_X_ Approved as noted
____ Revise and resubmit
See transmittal for additional information as applicable.
This review is for general conformance with design concept only. Any deviation from the plans or specifications not clearly noted by the Contractor has not been reviewed. Review by the Engineer shall not relieve the Contractor of the contractual responsibility for any errors or deviation from the contract requirements.
Josh Olund 08/18/2016
Reviewer Date

No.	Date	Revision	By

STATE OF VERMONT REGISTERED PROFESSIONAL ENGINEER LICENSE NO. 8031 Structural 8/18/16

DESIGNED AND DETAILED BY:
DELTA ENGINEERS, ARCHITECTS, & LAND SURVEYORS
860 HOOPER ROAD, ENDWELL, NY 13760-1564
TEL. (607) 231-6600 FAX: (607) 231-6650

Scale: AS SHOWN
Checked by:
Drawn by: GSC
Designed by: DELTA
Project No. 7347
Date: 6/29/16

VT 100 Road Culvert
Duxbury, Vermont

Culvert Section and Elevation

PREPARED FOR:
MICHIE CORPORATION, INC.
173 BUXTON INDUSTRIAL DRIVE-P.O BOX 870
HENNIKER, NH 03242
PHONE: 603-428-3218
FAX: 603-428-7428

DWG NO.
S2.0

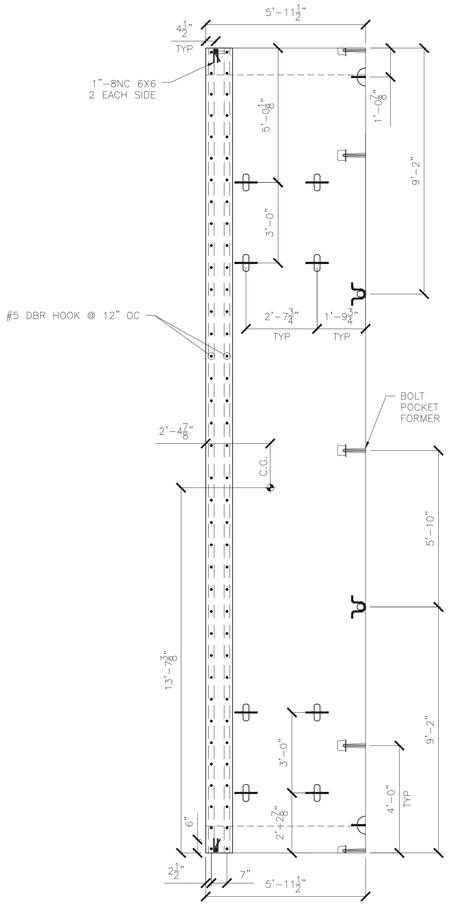

1 S3.0 AC-1 PLAN VIEW
⅜" = 1'-0"

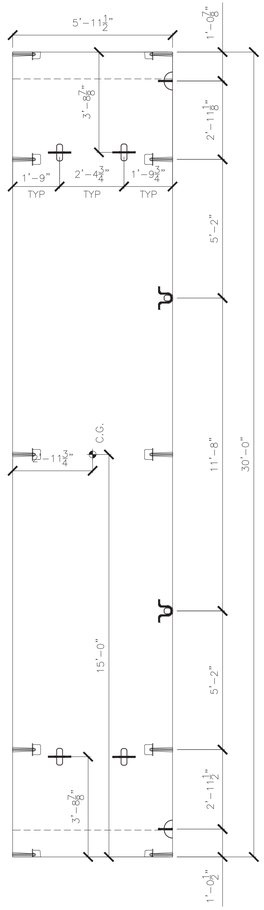

2 S3.0 AC-2 PLAN VIEW
⅜" = 1'-0"

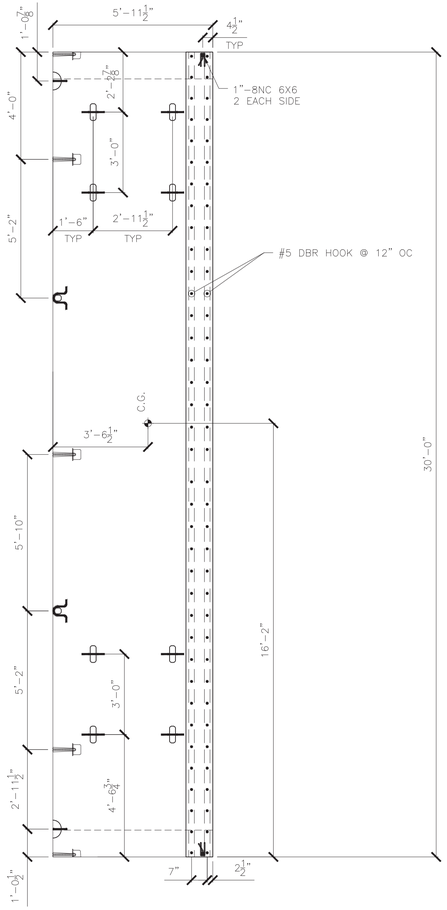

3 S3.0 AC-3 PLAN VIEW
⅜" = 1'-0"

Vermont Agency of Transportation
RECEIVED
AC (Bid) State of VT (Stamped sub S7347 - TYLI Review.pdf)
CK'D BY TYLIN OK'D BY JMF
August 15, 2016
RESUBMIT No Approved AsNoted
BY Jennifer Fitch DATE 08/18/2016

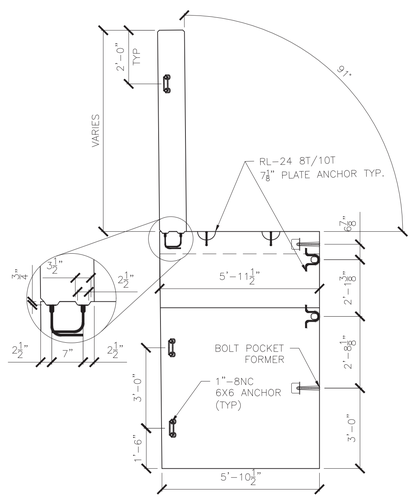

4 S3.0 AC-1 ELEVATION VIEW

AC-1: 1 REQ'D
UNIT WEIGHT AND VOLUME:
CULVERT: 9.24 CY (37,422#)
HEADWALL: 2.79 CY (11,300#)

TOTAL WEIGHT: 48,722#

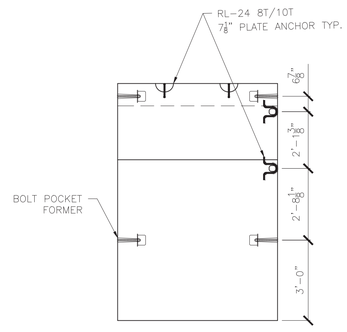

5 S3.0 AC-2 ELEVATION VIEW
⅜" = 1'-0"

AC-2: 22 REQ'D
UNIT WEIGHT AND VOLUME:
CULVERT: 9.24 CY (37,422#)

TOTAL WEIGHT: 37,422#

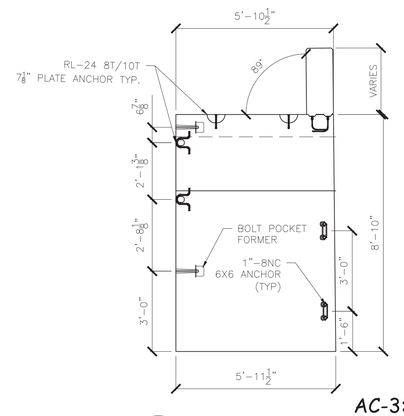

6 S3.0 AC-3 ELEVATION VIEW
⅜" = 1'-0"

AC-3: 1 REQ'D
UNIT WEIGHT AND VOLUME:
CULVERT: 9.24 CY (37,422#)
HEADWALL: 2.71 CY (11,016#)

TOTAL WEIGHT: 48,438#

TYLIN INTERNATIONAL
The stamped documents are hereby:
____ Approved
__X__ Approved as noted
____ Revise and resubmit

See transmittal for additional information as applicable.

This review is for general conformance with design concept only. Any deviation from the plans or specifications not clearly noted by the Contractor has not been reviewed. Review by the Engineer shall not relieve the Contractor of the contractual responsibility for any errors or deviation from the contract requirements.

Josh Olund 08/18/2016
Reviewer Date

No.	Date	Revision	By

STATE OF VERMONT
Joseph Michael Olund
No. 8031
Structural I
PROFESSIONAL ENGINEER
8/18/16

DESIGNED AND DETAILED BY:
DELTA
ENGINEERS, ARCHITECTS, & LAND SURVEYORS
860 HOOPER ROAD, ENDWELL, NY 13760-1564
TEL: (607) 231-6600 FAX: (607) 231-6650

VT 100 Road Culvert
Duxbury, Vermont

Culvert Plans And Elevations

Scale: AS SHOWN
Checked by:
Drawn by: GSC
Designed by: DELTA
Project No. 7347
Date: 6/29/16

PREPARED FOR:
MICHIE CORPORATION, INC.
173 BUXTON INDUSTRIAL DRIVE-PO BOX 870
HENNIKER, NH 03242
PHONE: 603-428-3218
FAX: 603-428-7428

DWG NO.
S3.0

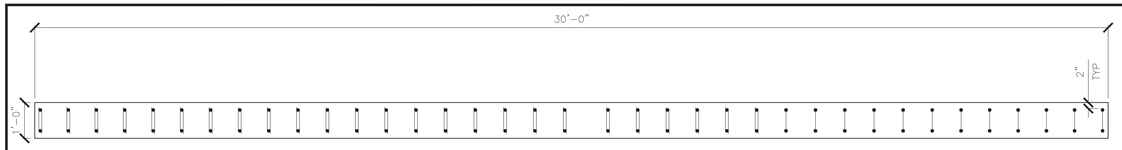

1 S4.0 INLET HEAD WALL PLAN VIEW
½" = 1'-0"

HW2 ONE REQUIRED
EACH PIECE WEIGHS: 11,300 LB
HEAD WALL: 2.79 CY

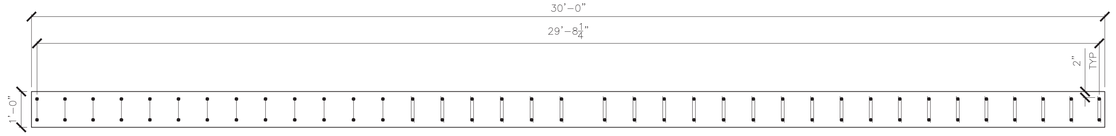

2 S4.0 OUTLET HEAD WALL PLAN VIEW
½" = 1'-0"

HW1 ONE REQUIRED
EACH PIECE WEIGHS: 11,016 LB
HEAD WALL: 2.72 CY

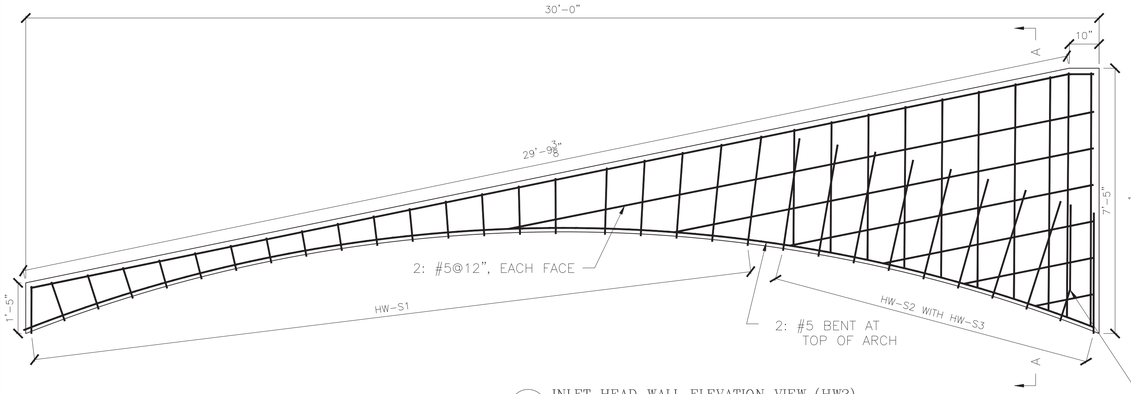

3 S4.0 INLET HEAD WALL ELEVATION VIEW (HW2)
½" = 1'-0"

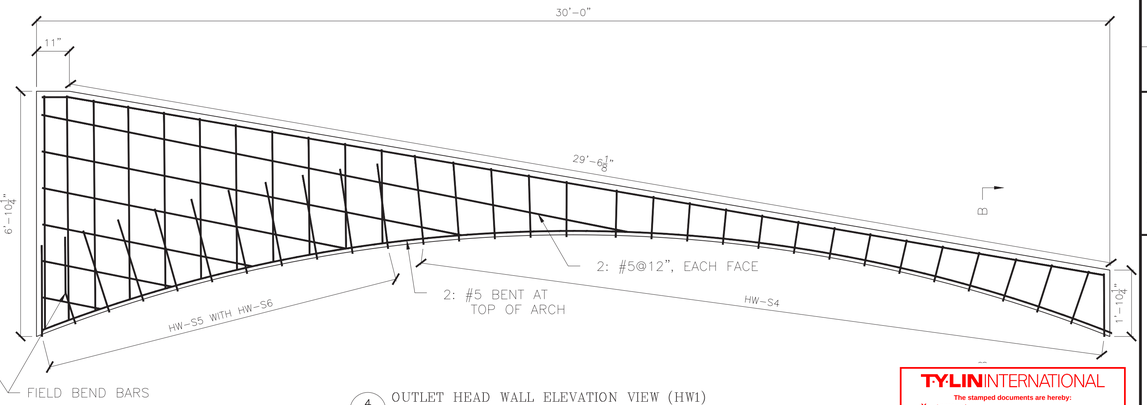

4 S4.0 OUTLET HEAD WALL ELEVATION VIEW (HW1)
½" = 1'-0"

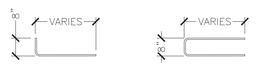

MK-HW-S1 "L" BAR MK-HW-S2 "U" BAR

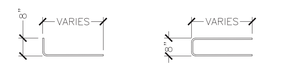

MK-HW-S4 "L" BAR MK-HW-S5 "U" BAR

TYLIN INTERNATIONAL

The stamped documents are hereby:

X Approved
___ Approved as noted
___ Revise and resubmit

See transmittal for additional information as applicable.

This review is for general conformance with design concept only. Any deviation from the plans or specifications not clearly noted by the Contractor has not been reviewed. Review by the Engineer shall not relieve the Contractor of the contractual responsibility for any errors or deviation from the contract requirements.

Josh Olund — Reviewer
08/18/2016 — Date

Vermont Agency of Transportation
RECEIVED
AC 28x8 State of VT (stamped sub 3/2747 - TYLI Review.pdf

CK'D BY TYLIN OK'D BY JMF
August 15, 2016
RESUBMIT No Approved AsNoted
BY Jennifer Fitch DATE 08/18/2016

INLET HW2 REINFORCING SCHEDULE

BAR MARK	TYPE	SIZE/SPACING	CUT LENGTH	# OF PCS
MK-HW-S1	BENT	#5@10"	1'-4 3/16" TO 3'-7½"	21
MK-HW-S2	BENT	#5@10"	6'-11½" TO 14'-9¼"	10
MK-HW-S3	STRAIGHT DWL IN	#5	3'-2"	20

ALL REBAR TO BE EPOXY COATED

OUTLET HW1 REINFORCING SCHEDULE

BAR MARK	TYPE	SIZE/SPACING	CUT LENGTH	# OF PCS
MK-HW-S4	BENT	#5@10"	1'-6½" TO 3'-0¾"	27
MK-HW-S5	BENT	#5@10"	5'-8½" TO 13'-7½"	11
MK-HW-S6	STRAIGHT DWL IN	#5	3'-2"	22

ALL REBAR TO BE EPOXY COATED

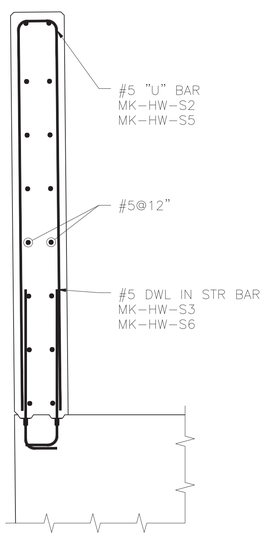

SECTION A-A

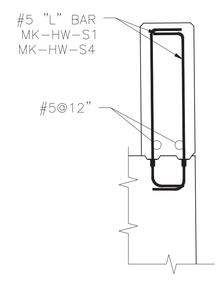

SECTION B-B

No.	Date	Revision	By

STATE OF VERMONT
DARYL D. BURNS
No. 9031
Structural I
LICENSED PROFESSIONAL ENGINEER
8/18/16

DESIGNED AND DETAILED BY:
DELTA
ENGINEERS, ARCHITECTS, & LAND SURVEYORS
860 HOOPER ROAD, ENDWELL, NY 13760-1564
TEL: (607) 231-6600 FAX: (607) 231-6650

Scale: AS SHOWN

VT 100 Road Culvert
Duxbury, Vermont

Head Wall Details

Project No. 7347
Date: 6/29/16
Designed by: DELTA
Drawn by: GSC
Checked by:

PREPARED FOR:
MICHIE
MICHIE CORPORATION, INC.
173 BUXTON INDUSTRIAL DRIVE-PO BOX 870
HENNIKER, NH 03242
PHONE: 603-428-3218
FAX: 603-428-7426

DWG NO.
S4.0

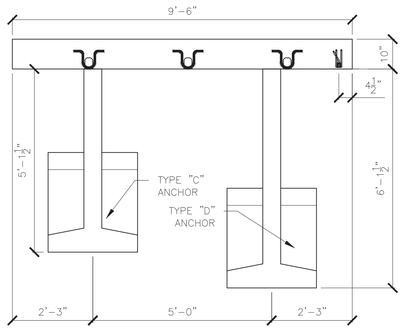

1 S5.0 WW1B PLAN VIEW
½" = 1'-0"

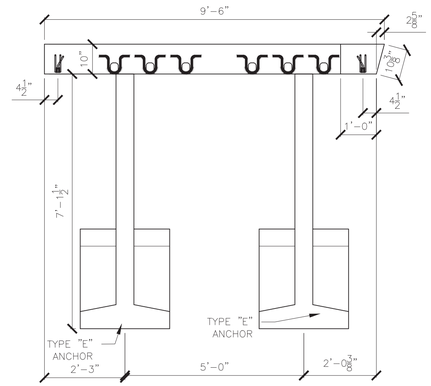

2 S5.0 WW1A PLAN VIEW
½" = 1'-0"

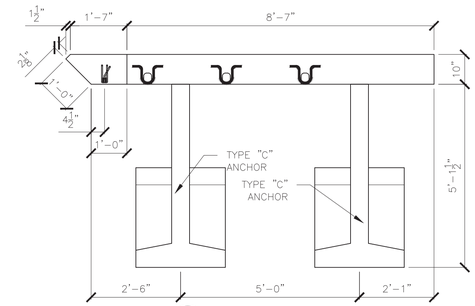

3 S5.0 WW2A PLAN VIEW
½" = 1'-0"

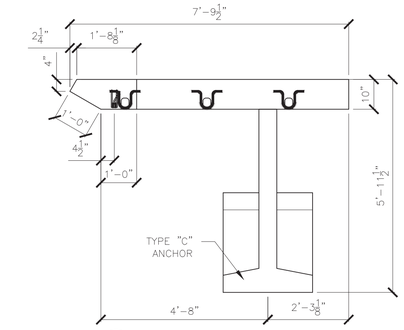

4 S5.0 WW3A PLAN VIEW
½" = 1'-0"

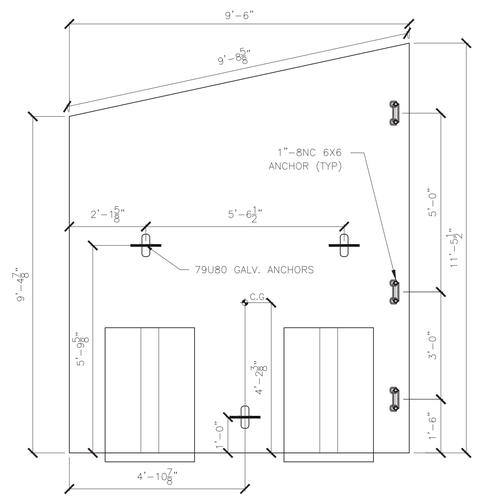

5 S5.0 WW1B ELEVATION
½" = 1'-0"

1 WW1B REQUIRED
UNIT WEIGHT AND VOLUME:
TOTAL: 16,478#
WALL: (2.98 CY)
D ANCHOR: 0.58 CY
C ANCHOR: 0.51 CY

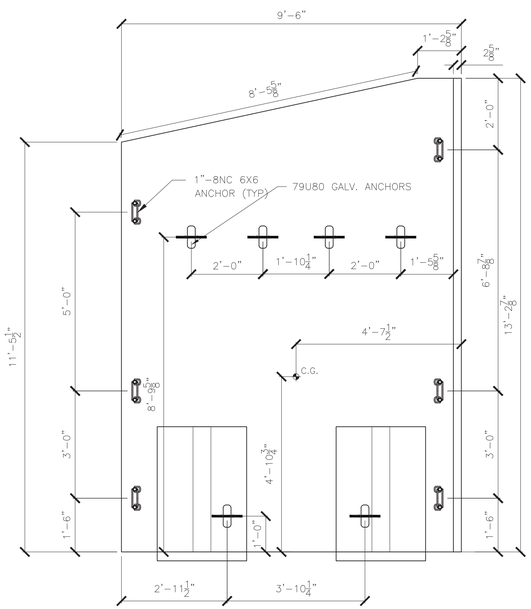

6 S5.0 WW1A ELEVATION
½" = 1'-0"

1 WW1A REQUIRED
UNIT WEIGHT AND VOLUME:
TOTAL: 19,619#
WALL: (3.56 CY)
E ANCHOR: 0.64 CY
E ANCHOR: 0.64 CY

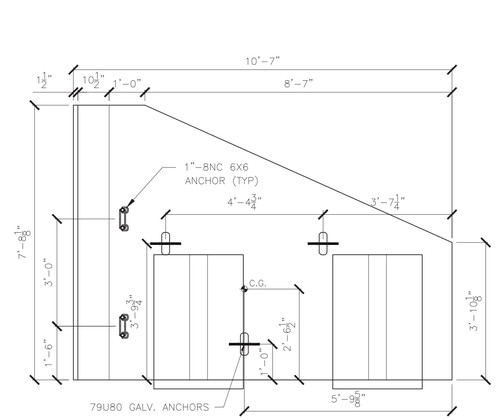

7 S5.0 WW2A ELEVATION
½" = 1'-0"

1 WW2A REQUIRED
UNIT WEIGHT AND VOLUME:
TOTAL: 11,688#
WALL: (1.87 CY)
C ANCHOR: 0.51 CY
C ANCHOR: 0.51 CY

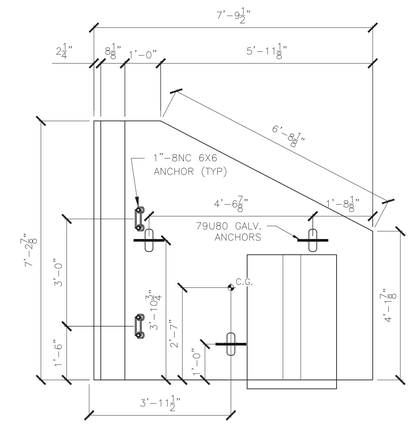

8 S5.0 WW3A ELEVATION
½" = 1'-0"

1 WW3A REQUIRED
UNIT WEIGHT AND VOLUME:
TOTAL: 7,540#
WALL: (1.35 CY)
C ANCHOR: 0.51 CY

Vermont Agency of Transportation
RECEIVED
AC 35c8 State of VT (stamped sub S7347 - TYLI Review.pdf
CK'D BY TYLIN OK'D BY JMF
August 15, 2016
RESUBMIT No Approved AsNoted
BY Jennifer Fitch DATE 08/18/2016

TYLIN INTERNATIONAL
The stamped documents are hereby:
___ Approved
_X_ Approved as noted
___ Revise and resubmit
See transmittal for additional information as applicable.
This review is for general conformance with design concept only. Any deviation from the plans or specifications not clearly noted by the Contractor has not been reviewed. Review by the Engineer shall not relieve the Contractor of the contractual responsibility for any errors or deviation from the contract requirements.
Josh Olund 08/18/2016
Reviewer Date

No.	Date	Revision	By

STATE OF VERMONT
JAMES M. DEMARCO
No. 8873
Structural I
License
PROFESSIONAL ENGINEER
8/8/16

DESIGNED AND DETAILED BY:
DELTA
ENGINEERS, ARCHITECTS, & LAND SURVEYORS
860 HOOPER ROAD, ENDWELL, NY 13760-1584
TEL: (607) 231-6600 FAX: (607) 231-6650

VT 100 Road Culvert
Duxbury, Vermont
Wingwall Details

Scale: AS SHOWN
Checked by:
Drawn by: GSC
Designed by: DELTA
Project No. 7347
Date: 6/29/16

PREPARED FOR:
MICHIE CORPORATION, INC.
173 BUXTON INDUSTRIAL DRIVE-PO BOX 870
HENNIKER, NH 03242
PHONE: 603-428-3218
FAX: 603-428-7426

DWG NO.
S5.0

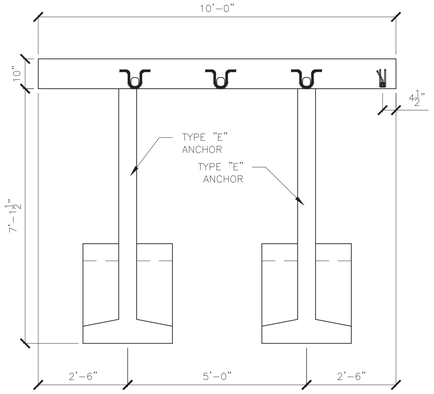

1 S6.0 WW4C PLAN VIEW
½" = 1'-0"

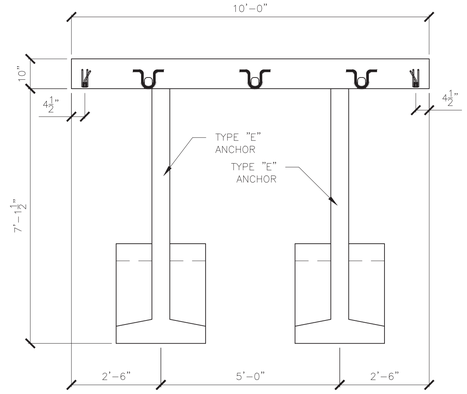

2 S6.0 WW4B PLAN VIEW
½" = 1'-0"

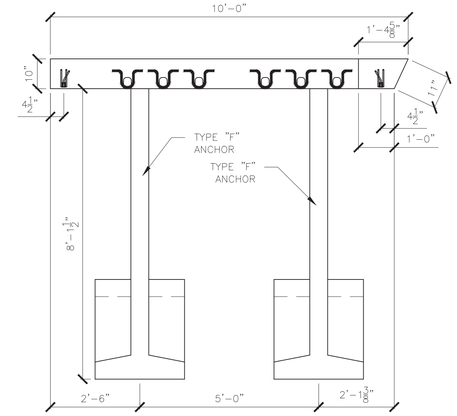

3 S6.0 WW4A PLAN VIEW
½" = 1'-0"

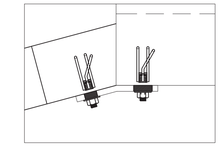

WW1 CONNECTION
165° BENT PLATE

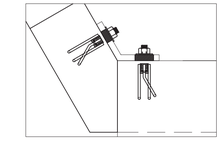

WW3 CONNECTION
120° BENT PLATE

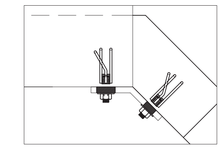

WW2 CONNECTION
135° BENT PLATE

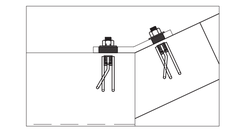

WW4 CONNECTION
155° BENT PLATE

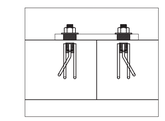

MIDWALL CONNECTION
180° PLATE

ALL CONNECTIONS USE
1" – 8NC 6X6 DOUBLE
WINGWALL ANCHORS
WITH 1" BENT PLATES

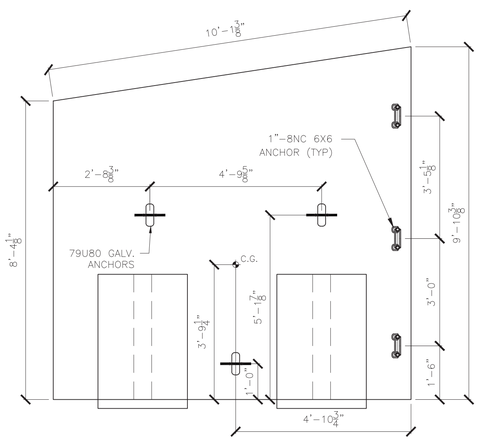

4 S6.0 WW4C ELEVATION
½" = 1'-0"

1 WW4C
REQUIRED
UNIT WEIGHT AND VOLUME:
TOTAL: 16,429#
WALL: (2.78 CY)
E ANCHOR: 0.64 CY
E ANCHOR: 0.64 CY

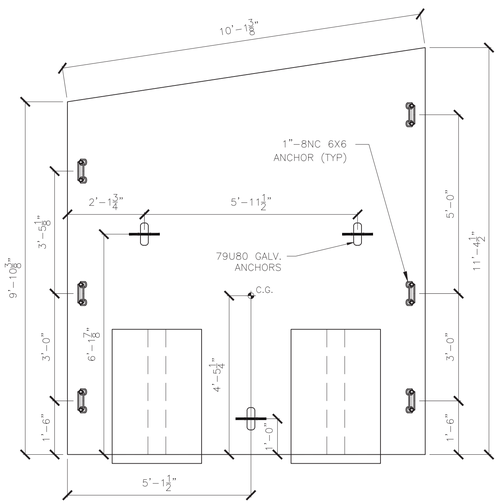

5 S6.0 WW4B ELEVATION
½" = 1'-0"

1 WW4B
REQUIRED
UNIT WEIGHT AND VOLUME:
TOTAL: 18,262#
WALL: (3.23 CY)
E ANCHOR: 0.64 CY
E ANCHOR: 0.64 CY

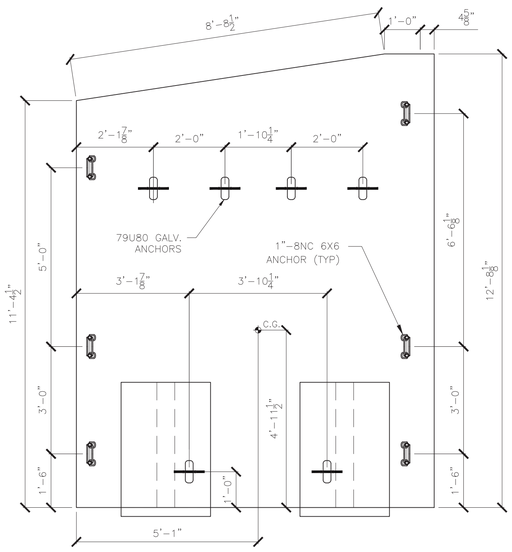

6 S6.0 WW4A ELEVATION
½" = 1'-0"

1 WW4A
REQUIRED
UNIT WEIGHT AND VOLUME:
TOTAL: 20,655#
WALL: (3.68 CY)
F ANCHOR: 0.71 CY
F ANCHOR: 0.71 CY

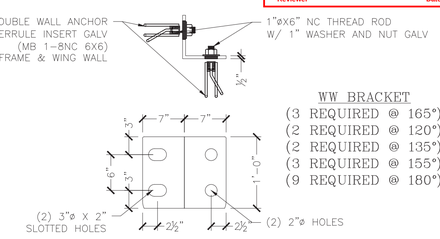

PLATES TO BE MADE OF ⅜" MILD STEEL,
PLASMA CUT, AND BENT AS REQUIRED.
(HOT DIPPED GALVANIZED AFTER BENDING)

3 S5.0 WINGWALL BRACKET DETAIL
1" = 1'-0"

TYLIN INTERNATIONAL

The stamped documents are hereby:

____ Approved
_X_ Approved as noted
____ Revise and resubmit

See transmittal for additional information as applicable.

This review is for general conformance with design concept only. Any deviation from the plans or specifications not clearly noted by the Contractor has not been reviewed. Review by the Engineer shall not relieve the Contractor of the contractual responsibility for any errors or deviation from the contract requirements.

Josh Olund — Reviewer
08/18/2016 — Date

Vermont Agency of Transportation
RECEIVED
AC 35x6 State of VT (stamped sub 32747 - TYLI Review.pdf

CK'D BY TYLIN OK'D BY JMF

August 15, 2016

RESUBMIT No Approved AsNoted
BY Jennifer Fitch DATE 08/18/2016

No.	Date	Revision	By

STATE OF VERMONT — JOSHUA M. OLUND — No. 6031 — Structural I — LICENSED PROFESSIONAL ENGINEER — 8/18/16

DESIGNED AND DETAILED BY:
DELTA ENGINEERS, ARCHITECTS, & LAND SURVEYORS
860 HOOPER ROAD, ENDWELL, NY 13760-1584
TEL: (607) 231-6600 FAX: (607) 231-6650

VT 100 Road Culvert
Duxbury, Vermont

Wingwall Details

Scale: AS SHOWN
Checked by:
Drawn by: GSC
Designed by: DELTA
Date: 6/29/16
Project No. 7347

PREPARED FOR:
MICHIE CORPORATION, INC.
173 BUXTON INDUSTRIAL DRIVE-P.O BOX 870
HENNIKER, NH 03242
PHONE: 603-428-3218
FAX: 603-428-7426

DWG NO.
S6.0

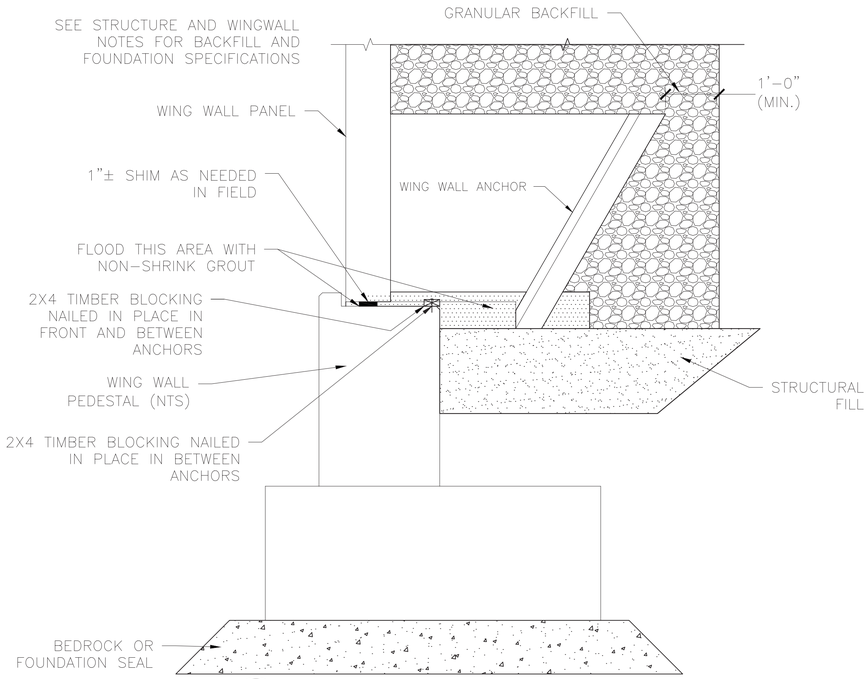

5 / S7.0 FOOTING TO WW ATTACHMENT DETAIL

¾" = 1'-0"

NOTE: BAR COUNTS REPRESENT 1 UNIT.

WW1A REINFORCING SCHEDULE

BAR MARK	LOCATION	TYPE	SIZE/SPACING	CUT LENGTH	# OF PCS
VERTICAL	OSF	STRAIGHT	#5 @ 12"	12'-8" TO 10'-10"	9
VERTICAL	ISF	STRAIGHT	#5 @ 5"	12'-8" TO 10'-10"	22
HORIZONTAL	OSF	STRAIGHT	#5 @ 12"	9'-2"	13
HORIZONTAL	ISF	STRAIGHT	#5 @ 12"	8'-11"	13
DIAGONAL	FOLLOW SLOPE	STRAIGHT	#4	8'-10"	2

WW1B REINFORCING SCHEDULE

BAR MARK	LOCATION	TYPE	SIZE/SPACING	CUT LENGTH	# OF PCS
VERTICAL	OSF	STRAIGHT	#5 @ 12"	10'-10" TO 8'-10"	10
VERTICAL	ISF	STRAIGHT	#5 @ 5"	10'-10" TO 8'-10"	23
HORIZONTAL	OSF	STRAIGHT	#5 @ 12"	9'-2"	11
HORIZONTAL	ISF	STRAIGHT	#5 @ 12"	9'-2"	11
DIAGONAL	FOLLOW SLOPE	STRAIGHT	#4	9'-4"	2

WW2A REINFORCING SCHEDULE

BAR MARK	LOCATION	TYPE	SIZE/SPACING	CUT LENGTH	# OF PCS
VERTICAL	OSF	STRAIGHT	#5 @ 12"	7'-1" TO 3'-4"	10
VERTICAL	ISF	STRAIGHT	#5 @ 12"	7'-1" TO 3'-4"	10
HORIZONTAL	OSF	STRAIGHT	#5 @ 12"	6'-9"	8
HORIZONTAL	ISF	STRAIGHT	#5 @ 12"	9'-4"	8
DIAGONAL	FOLLOW SLOPE	STRAIGHT	#4	6'-0"	2

WW3A REINFORCING SCHEDULE

BAR MARK	LOCATION	TYPE	SIZE/SPACING	CUT LENGTH	# OF PCS
VERTICAL	OSF	STRAIGHT	#5 @ 12"	5'-8" TO 3'-7"	8
VERTICAL	ISF	STRAIGHT	#5 @ 12"	5'-8" TO 3'-7"	7
HORIZONTAL	OSF	STRAIGHT	#5 @ 12"	6'-7"	6
HORIZONTAL	ISF	STRAIGHT	#5 @ 12"	9'-2"	6
DIAGONAL	FOLLOW SLOPE	STRAIGHT	#4	9'-4"	2

WW4A REINFORCING SCHEDULE

BAR MARK	LOCATION	TYPE	SIZE/SPACING	CUT LENGTH	# OF PCS
VERTICAL	OSF	STRAIGHT	#5 @ 5"	12'-3" TO 10'-10"	10
VERTICAL	ISF	STRAIGHT	#5 @ 12"	12'-3" TO 10'-10"	10
HORIZONTAL	OSF	STRAIGHT	#5 @ 12"	9'-8"	12
HORIZONTAL	ISF	STRAIGHT	#5 @ 12"	9'-3"	12
DIAGONAL	FOLLOW SLOPE	STRAIGHT	#4	9'-4"	2

WW4B REINFORCING SCHEDULE

BAR MARK	LOCATION	TYPE	SIZE/SPACING	CUT LENGTH	# OF PCS
VERTICAL	OSF	STRAIGHT	#5 @ 5"	10'-10" TO 9'-4"	10
VERTICAL	ISF	STRAIGHT	#5 @ 12"	10'-10" TO 9'-4"	10
HORIZONTAL	OSF	STRAIGHT	#5 @ 12"	9'-8"	12
HORIZONTAL	ISF	STRAIGHT	#5 @ 12"	9'-8"	12
DIAGONAL	FOLLOW SLOPE	STRAIGHT	#4	9'-4"	2

WW4C REINFORCING SCHEDULE

BAR MARK	LOCATION	TYPE	SIZE/SPACING	CUT LENGTH	# OF PCS
VERTICAL	OSF	STRAIGHT	#5 @ 12"	9'-4" TO 7'-11"	10
VERTICAL	ISF	STRAIGHT	#5 @ 12"	9'-4" TO 7'-11"	10
HORIZONTAL	OSF	STRAIGHT	#5 @ 12"	9'-8"	10
HORIZONTAL	ISF	STRAIGHT	#5 @ 12"	9'-8"	10
DIAGONAL	FOLLOW SLOPE	STRAIGHT	#4	9'-4"	2

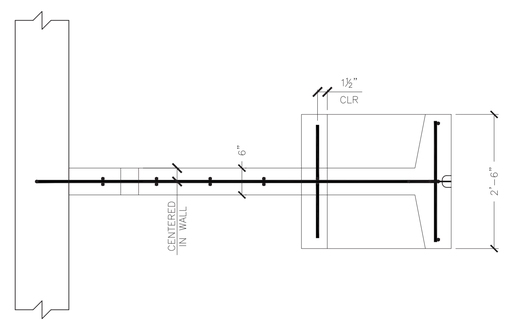

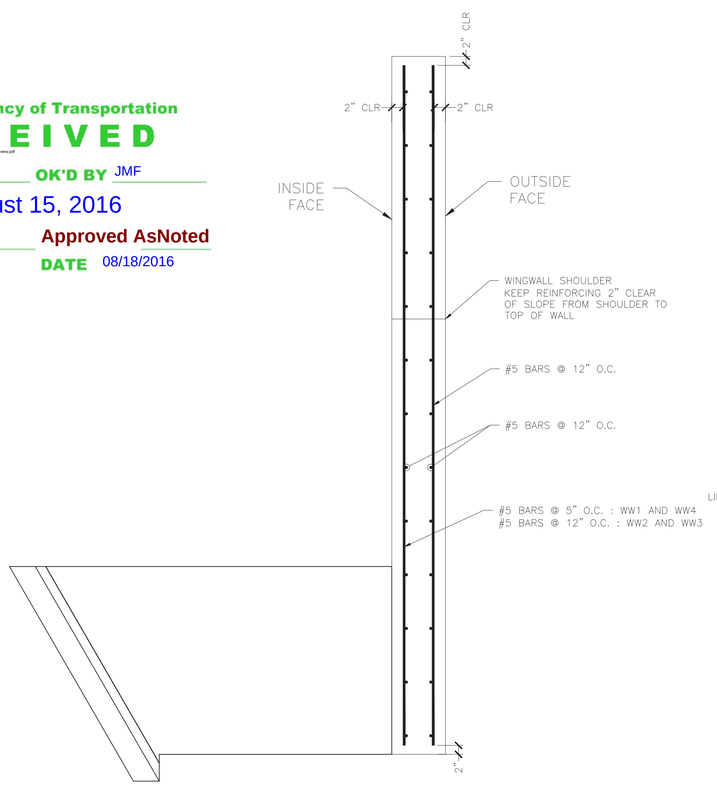

1 / S7.0 WINGWALL REINFORCING (TYP)

¾" = 1'-0"

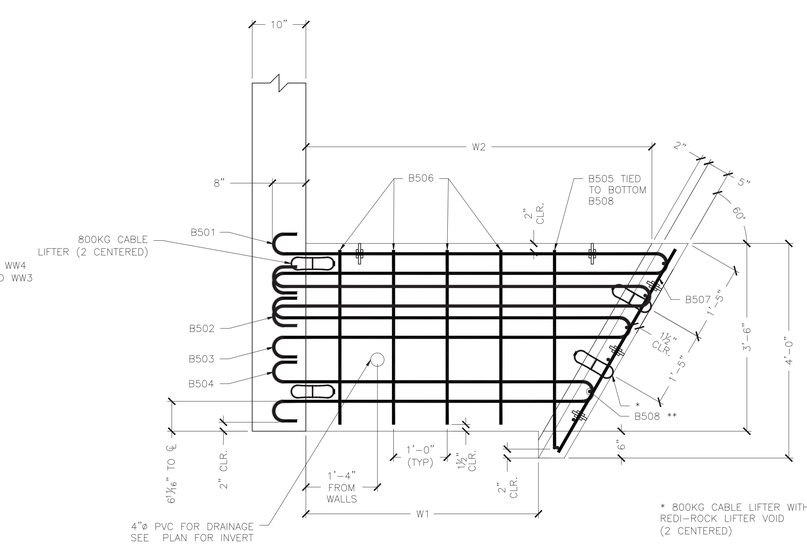

2 / S7.0 ANCHOR DETAIL

¾" = 1'-0"

* 800KG CABLE LIFTER WITH REDI-ROCK LIFTER VOID (2 CENTERED)

** PLACE (1) B508 THROUGH EACH HOOP BARS, (1) CENTERED BETWEEN HOOP BARS 503 & 504, AND (2) BELOW B504 HOOP BAR W/ BOTTOM B508 2" CLEAR FROM BOTTOM (7 TOTAL)

5 REQ'D

1 REQ'D

6 REQ'D

2 REQ'D

ANCHOR TYPE "C"					
CONCRETE QUANTITY				0.48 CY	
WEIGHT				2010 LB	
W1				2'-4"	
W2				4'-5⅜"	
X =	2'-8¾"	Y=	1'-8½"		
BAR LIST					
MARK	QTY	SIZE	L	TYPE	LENGTH
B501	1	#5	5'-4½"	1	12'-1½"
B502	1	#5	5'-0½"	1	11'-5"
B503	1	#5	4'-8¼"	1	10'-9"
B504	1	#5	4'-0"	1	9'-4½"
B505	2	#5	3'-8½"	2	4'-7"
B506	4	#5	----	Str.	3'-3"
B507	4	#5	----	Str.	4'-4½"
B508	7	#5	----	Str.	2'-3"

ANCHOR TYPE "D"					
CONCRETE QUANTITY				0.48 CY	
WEIGHT				2020 LB	
W1				3'-4"	
W2				5'-5⅜"	
X =	3'-5⅛"	Y=	1'-8½"		
BAR LIST					
MARK	QTY	SIZE	L	TYPE	LENGTH
B501	1	#5	6'-4½"	1	14'-1½"
B502	1	#5	6'-0½"	1	13'-5"
B503	1	#5	5'-8¼"	1	12'-9"
B504	1	#5	5'-0"	1	11'-4½"
B505	2	#5	3'-8½"	2	4'-7"
B506	6	#5	----	Str.	3'-3"
B507	4	#5	----	Str.	4'-4½"
B508	7	#5	----	Str.	2'-3"

ANCHOR TYPE "E"					
CONCRETE QUANTITY				0.61 CY	
WEIGHT				2550 LB	
W1				4'-4"	
W2				6'-5⅜"	
X =	4'-0"	Y=	1'-8⅝"		
BAR LIST					
MARK	QTY	SIZE	L	TYPE	LENGTH
B501	1	#7	7'-4½"	1	16'-1½"
B502	1	#7	7'-0½"	1	15'-5"
B503	1	#7	6'-8¼"	1	14'-9"
B504	1	#5	6'-0"	1	13'-4½"
B505	2	#5	3'-8½"	2	4'-8¾"
B506	8	#5	----	Str.	3'-3"
B507	4	#5	----	Str.	4'-4½"
B508	7	#5	----	Str.	2'-3"

ANCHOR TYPE "F"					
CONCRETE QUANTITY				0.68 CY	
WEIGHT				2860 LB	
W1				5'-4"	
W2				7'-5⅜"	
X =	4'-7⅝"	Y=	1'-8⅝"		
BAR LIST					
MARK	QTY	SIZE	L	TYPE	LENGTH
B501	1	#7	8'-4½"	1	18'-1½"
B502	1	#7	8'-0½"	1	17'-5"
B503	1	#7	7'-8¼"	1	16'-9"
B504	1	#7	7'-0"	1	15'-4½"
B505	2	#5	3'-8½"	2	4'-8¾"
B506	10	#5	----	Str.	3'-3"
B507	4	#5	----	Str.	4'-4½"
B508	7	#5	----	Str.	2'-3"

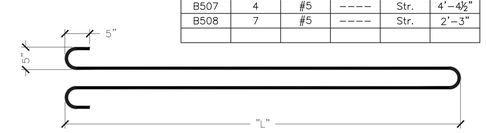

TYPE 1

TYPE 2

Vermont Agency of Transportation
RECEIVED
AC 35x8 State of VT (stamped sub 3/7347 - TYLI Review.pdf
CK'D BY TYLIN OK'D BY JMF
August 15, 2016
RESUBMIT No Approved AsNoted
BY Jennifer Fitch DATE 08/18/2016

TYLIN INTERNATIONAL
The stamped documents are hereby:
X Approved
Approved as noted
Revise and resubmit
See transmittal for additional information as applicable.
This review is for general conformance with design concept only. Any deviation from the plans or specifications not clearly noted by the Contractor has not been reviewed. Review by the Engineer shall not relieve the Contractor of the contractual responsibility for any errors or deviation from the contract requirements.
Josh Olund 08/18/2016
Reviewer Date

No.	Date	Revision	By

STATE OF VERMONT Josh Olund License No. 8031 Structural I PROFESSIONAL ENGINEER 8/18/16

DESIGNED AND DETAILED BY:
DELTA ENGINEERS, ARCHITECTS, & LAND SURVEYORS
860 HOOPER ROAD, ENDWELL, NY 13760-1584
TEL: (607) 231-6600 FAX: (607) 231-6650

VT 100 Road Culvert
Duxbury, Vermont
Anchor Details

Scale: AS SHOWN
Checked by:
Drawn by: GSC
Designed by: DELTA
Project No. 7347
Date: 6/29/16

PREPARED FOR:
MICHIE CORPORATION, INC.
173 BUXTON INDUSTRIAL DRIVE-PO BOX 870
HENNIKER, NH 03242
PHONE: 603-428-3218
FAX: 603-428-7426

DWG NO.
S7.0

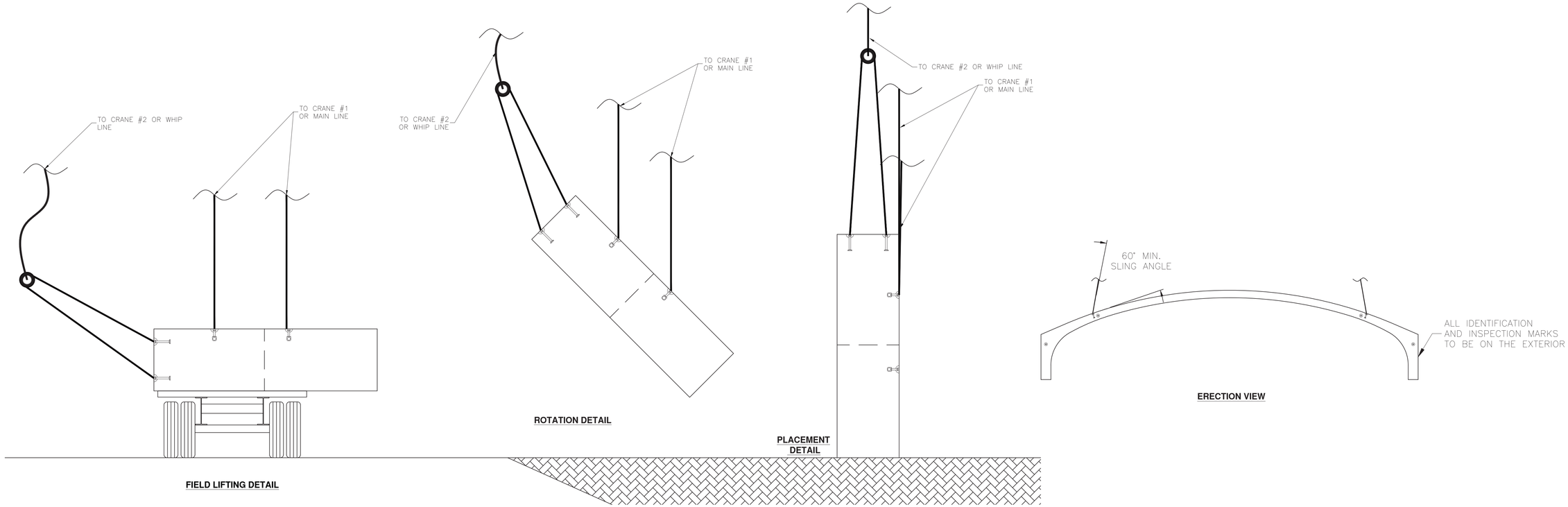

FIELD LIFTING DETAIL

ROTATION DETAIL

PLACEMENT DETAIL

ERECTION VIEW

Vermont Agency of Transportation
RECEIVED
AC 28x8 State of VT (stamped sub 31/347 - TYLI Review.pdf
CK'D BY TYLIN OK'D BY JMF
August 15, 2016
RESUBMIT No Approved AsNoted
BY Jennifer Fitch DATE 08/18/2016

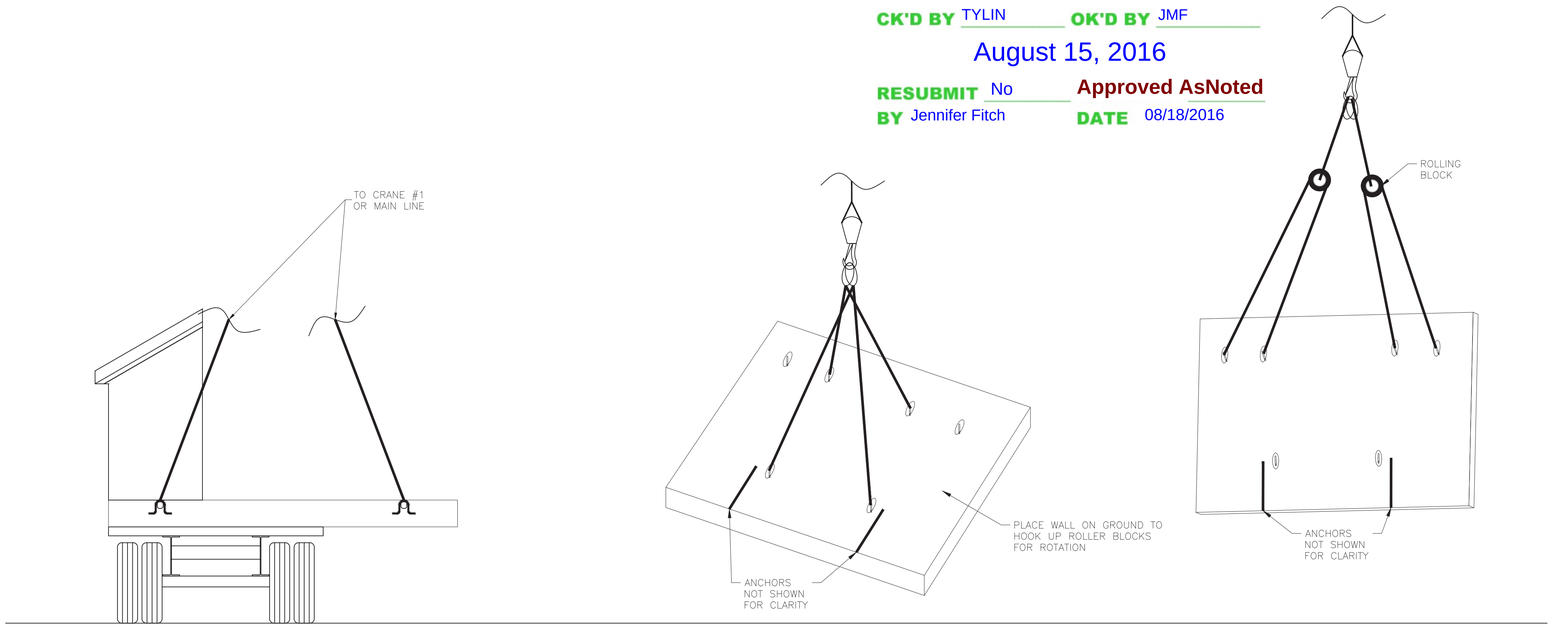

FIELD LIFTING DETAIL

ROTATION DETAIL

PLACEMENT DETAIL

TYLIN INTERNATIONAL
The stamped documents are hereby:
___ Approved
_X_ Approved as noted
___ Revise and resubmit
See transmittal for additional information as applicable.
This review is for general conformance with design concept only. Any deviation from the plans or specifications not clearly noted by the Contractor has not been reviewed. Review by the Engineer shall not relieve the Contractor of the contractual responsibility for any errors or deviation from the contract requirements.
Josh Olund 08/18/2016
Reviewer Date

No.	Date	Revision	By

STATE OF VERMONT
DANIEL D. BURNS
No. 9031
Structural I
LICENSED
PROFESSIONAL ENGINEER
8/18/16

DESIGNED AND DETAILED BY;
DELTA
ENGINEERS, ARCHITECTS, & LAND SURVEYORS
860 HOOPER ROAD, ENDWELL, NY 13760-1564
TEL: (607) 231-6600 FAX: (607) 231-6650

Scale: AS SHOWN
Checked by:
Drawn by: GSC
Designed by: DELTA
Project No. 7347
Date: 6/29/16

VT 100 Road Culvert
Duxbury, Vermont

Lifting Details

PREPARED FOR ;
MICHIE
MICHIE CORPORATION, INC.
173 BUXTON INDUSTRIAL DRIVE-PO BOX 870
HENNIKER, NH 03242
PHONE: 603-428-3218
FAX: 603-428-7426

DWG NO.
S8.0