ABUTMENT & WING WALL GENERAL NOTES

1. MIN. CONCRETE STRENGTH AT 28 DAYS SHALL BE ABUTMENT & WING WALLS = 5,000 PSI.
2. MIN. CONCRETE STRENGTH FOR HANDLING OF WING WALLS SHALL BE 3,500 PSI (UNLESS NOTED OTHERWISE).
3. MIN. CONCRETE STRENGTH FOR HANDLING OF ABUTMENTS SHALL BE 5,000 PSI.
4. ALL REINFORCING STEEL SHALL BE GR-60, ~~ASTM A-615 (AASHTO M31)~~ (LEVEL I (EPOXY COATED)). 1
5. THE TOP OF ABUTMENTS SHALL RECEIVE A RAKE FINISH ROUGHENED TO 1/4" AMPLITUDE (UNLESS NOTED OTHERWISE).
6. THE TOP OF WING WALLS SHALL RECEIVE A SMOOTH SCREED FINISH (UNLESS NOTED OTHERWISE).
7. PRECAST CONCRETE UNITS SHALL BE HANDLED AND ERECTED USING THE LIFTING INSERTS ONLY. THE MINIMUM SLING ANGLE FROM THE HORIZONTAL SHALL BE 60°. NON-PRESTRESSED UNITS SHALL BE STORED & TRANSPORTED WITH TIMBER SUPPORTS AT 5TH POINTS, UNLESS APPROVED BY J.P. CARRARA & SONS, INC.
8. MATERIAL SPECIFICATION AND MIX DESIGN SHALL CONFORM TO VERMONT SPEC. P540.02 AND P540.05 RESPECTIVELY.

   DESIGN MIX:

   WING WALLS: J.P.C. BRIDGE MIX #445MSCC

   ABUTMENTS: J.P.C. BRIDGE MIX #425M-NO DCI
9. QUALITY CONTROL PROCEDURES ARE IN ACCORDANCE WITH PCI REQUIREMENTS. J.P. CARRARA & SONS, INC. IS A PCI CERTIFIED PLANT.
10. CURING METHOD: AS SOON AS THE TOP OF PRECAST CONCRETE UNITS IS FINISHED, A COVER OF POLY WILL BE PLACED OVER THE UNIT. ENCLOSURE ENVIRONMENT TO BE MAINTAINED UNTIL HANDLING STRENGTH ARCHIVED. NATURAL CURE WITH NO EXTERNAL HEAT APPLIED.AMBIENT ENCLOSURE TEMPERATURE SHALL BE MONITORED. UNITS SHALL NOT BE EXPOSED TO TEMPERATURE DIFFERENTIAL GREATER THAN 40°F. UNIT SHALL NOT BE EXPOSED TO A TEMPERATURE LESS THAN 36°F UNTIL DESIGN STRENGTH IS ACHIEVED.
11. ABUTMENT LIFTING NOTES: 1
    PRECAST ABUTMENTS SHALL BE HANDLED AND ERECTED USING THE LIFTING LOOPS AND LIFTING INSERTS ONLY. THE MINIMUM SLING ANGLE FROM THE HORIZONTAL SHALL BE 60 DEGREES, EXCEPT WHERE NOTED IN THE ERECTION PLAN. THE PINS OF THE SHACKLES SHALL BE PLACED THROUGH THE LIFTING LOOPS, SEE DETAIL,THIS SHEET. NON PRESTRESSED UNITS SHALL BE STORED AND TRANSPORTED WITH TIMBER SUPPORTS AT FIFTH POINTS, UNLESS APPROVED BY J.P.CARRARA & SONS,INC.

AASHTO M284/
ASTM A775

PREFABRICATED BRIDGE UNIT GENERAL NOTES

1. MIN. CONCRETE STRENGTH AT 28 DAYS SHALL BE 4,000 PSI.
2. MIN. CONCRETE STRENGTH FOR HANDLING OF PREFABRICATED BRIDGE UNITS SHALL BE 4,000 PSI. 1
3. REINFORCING STEEL SHALL BE GR-60, ~~ASTM A-615 (AASHTO M31)~~ (LEVEL I (EPOXY COATED)). 1
4. ALL EXPOSED CORNERS SHALL BE CHAMFERED 1".
5. THE TOP OF PBU'S SHALL RECEIVE A SMOOTH SCREED FINISH (UNLESS NOTED OTHERWISE).
6. SHEAR KEY SURFACES SHALL BE ROUGHENED TO PROVIDE 1/8" AMPLITUDE SURFACE PROFILE WITH SOME EXPOSED AGGREAGATE.
7. PBUs SHALL BE HANDLED AND ERECTED AS PER THE ERECTION PLAN USING SLINGS THAT PASS THROUGH BLOCKOUTS CAST IN THE PRECAST DECK AT LOCATIONS SHOWN IN THE PRECAST SHOP DRAWINGS. THE PBUs SHALL BE TRANSPORTED WITH TIMBER SUPPORTS AT BLOCKOUT LOCATIONS, UNLESS APPROVED BY J.P. CARRARA & SONS, INC.
8. 1 MATERIAL SPECIFICATION SHALL MEET THE REQUIREMENTS OF THE FOLLOWING VERMONT SPECIFICATIONS : ~~P501.01~~, P506.02, 507.02, 508.02, 540.02, & 780.01-780.04. THE MIX DESIGN SHALL CONFIRM TO VERMONT SPECIFICATION SUBSECTION 540.05.
   DESIGN MIX: VERMONT HIGH PERFORMENCE CLASS A (VT HPCA)
9. QUALITY CONTROL PROCEDURES ARE IN ACCORDANCE WITH PCI REQUIREMENTS. J.P. CARRARA & SONS, INC. IS A PCI CERTIFIED PLANT. FOR ADDITIONAL TOLERANCES REF. PROJECT SPECIAL PROVISION DATED OCTOBER 22, 2015 ITEM 62(K).
10. CURING SHALL MEET THE REQUIREMENTS OF SUB SECTION 501.17.
11. OWNER SHALL PROVIDE APPROPRIATE WATERPROOFING TO GROUTED AND/OR EPOXIED SHEAR KEYS. J.P. CARRARA & SONS, INC. SHALL NOT BE HELD LIABLE FOR PROBLEMS ASSOCIATED WITH MOISTURE INFILTRATING GROUTED AND/OR EPOXIED SHEAR KEYS.

P501.02
(".01" was a typo in last review.)

DRAWING INDEX

SHT. #	DRAWING TITLE	REV. #	REV. DATE
C1	COVER SHEET	1	04/18/2016
F1	PRECAST ABUTMENT LAYOUT	1	04/18/2016
F2	ABUTMENT #1 ELEVATIONS	1	04/18/2016
F3	ABUTMENT #2 ELEVATIONS	1	04/18/2016
F4	PREFABRICATED BRIDGE UNIT LAYOUT	1	04/18/2016
F5	TRANSVERSE SECTION & DETAILS		
PBU1A	PREFABRICATED BRIDGE UNIT DETAILS "CR-PBU1"	1	04/18/2016
PBU1B	PREFABRICATED BRIDGE UNIT DETAILS "CR-PBU1"	1	04/18/2016
PBU1C	PREFABRICATED BRIDGE UNIT DETAILS "CR-PBU1"	1	04/18/2016
PBU2A	PREFABRICATED BRIDGE UNIT DETAILS "CR-PBU2"	1	04/18/2016
PBU2B	PREFABRICATED BRIDGE UNIT DETAILS "CR-PBU2"	1	04/18/2016
PBU3A	PREFABRICATED BRIDGE UNIT DETAILS "CR-PBU3"	1	04/18/2016
PBU3B	PREFABRICATED BRIDGE UNIT DETAILS "CR-PBU3"	1	04/18/2016
PBU3C	PREFABRICATED BRIDGE UNIT DETAILS "CR-PBU3"	1	04/18/2016
AB1	PRECAST ABUTMENT DETAILS "CR-AB1"	1	04/18/2016
AB1.1	PRECAST ABUTMENT DETAILS "CR-AB1"	1	04/18/2016
AB2	PRECAST ABUTMENT DETAILS "CR-AB2"	1	04/18/2016
AB2.1	PRECAST ABUTMENT DETAILS "CR-AB2"	1	04/18/2016
WW1	PRECAST WINGWALL DETAILS "CR-WW1"	1	04/18/2016
WW2	PRECAST WINGWALL DETAILS "CR-WW2"	1	04/18/2016
WW3	PRECAST WINGWALL DETAILS "CR-WW3"	1	04/18/2016
WW4	PRECAST WINGWALL DETAILS "CR-WW4"	1	04/18/2016
M1	MATERIALS LIST (ABUTMENTS & WINGWALLS)	1	04/18/2016
M2	MATERIALS LIST (PREFABRICATED BRIDGE UNIT)	1	04/18/2016
EP	ERECTION PLAN PROCEDURE	1	
FP	DECK FORMING AND POURING PROCEDURE		

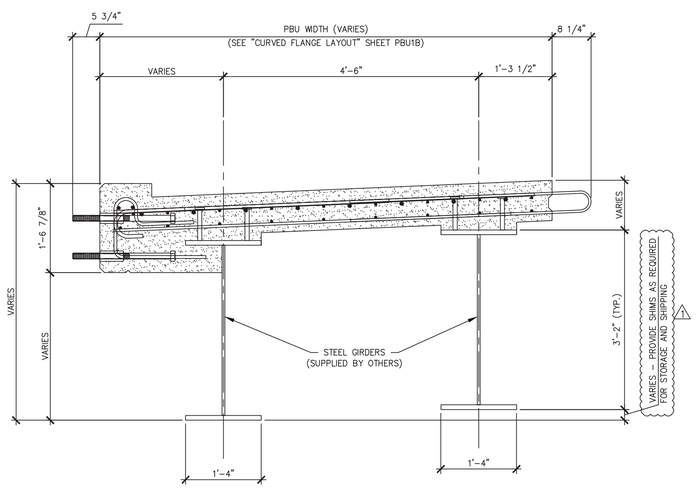

A
PBU1A
DIMENSIONAL & REINFORCING SECTION
3/4" = 1'-0"

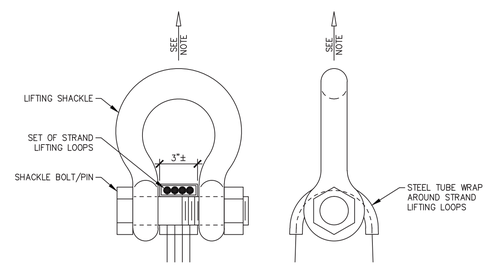

NOTE: PRECAST ABUTMENTS SHALL BE HANDLED AND ERECTED USING LIFTING LOOPS AS PROVIDED. RIGGING SHALL BE CONFIGURED WITH LENGTHS AS PER THE ERECTION PLAN TO ENSURE THE INTENDED FORCES ARE APPLIED AT EACH LIFT LOCATION. SHACKLE BOLT/PIN SHALL BE PLACED UNDER LIFT LOOPS AS SHOWN. DESIGN AND CONFIGURATION OF RIGGING BY THE PURCHASER.

LIFTING SHACKLE DETAILS
N.T.S.

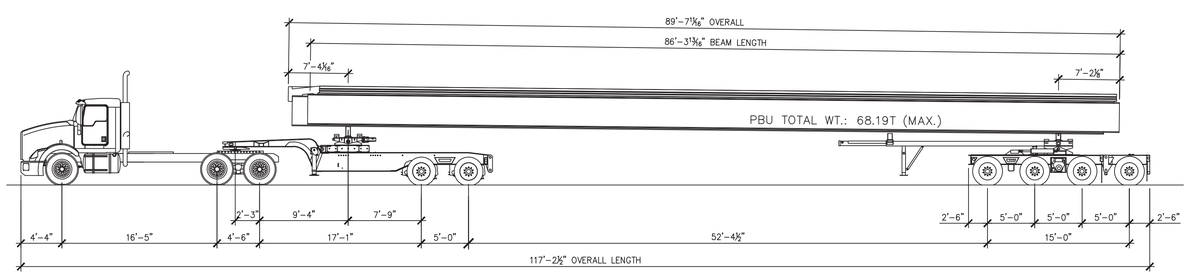

SHIPPING ELEVATION
N.T.S.

1 4-18-16 REVISED PER VTRANS COMMENTS

APPROVAL STAMP:
Vermont Agency of Transportation
RECEIVED
CK'D BY JDG/SMC OK'D BY WDL
April 18, 2016
RESUBMIT NO Approved AsNoted
BY RSY DATE 04/26/2016

J.P. CARRARA & SONS INC.
Precast & Prestress Manufacturer
2464 CASE STR., MIDDLEBURY, VERMONT 05753 Phone:(802)388-6361 Fax:(802)388-9010

CCS CONSTRUCTORS, INC
CONTRACTOR
MORRISVILLE, VT

STATE OF VERMONT AGENCY OF TRANSPORTATION
COUNTY OF ORLEANS

TOWN OF CRAFTSBURY
ROUTE NO. TH-4, RURAL MINOR COLLECTOR
BRIDGE NO.: 4 PROJECT NO.: BO 1449(34)

COVER SHEET

DATE: APR 18, 2016
SCALE: NOTED
CHKD: R.M. DFTM: PSS
JOB NO: 23478-015
DWG. NO: C1

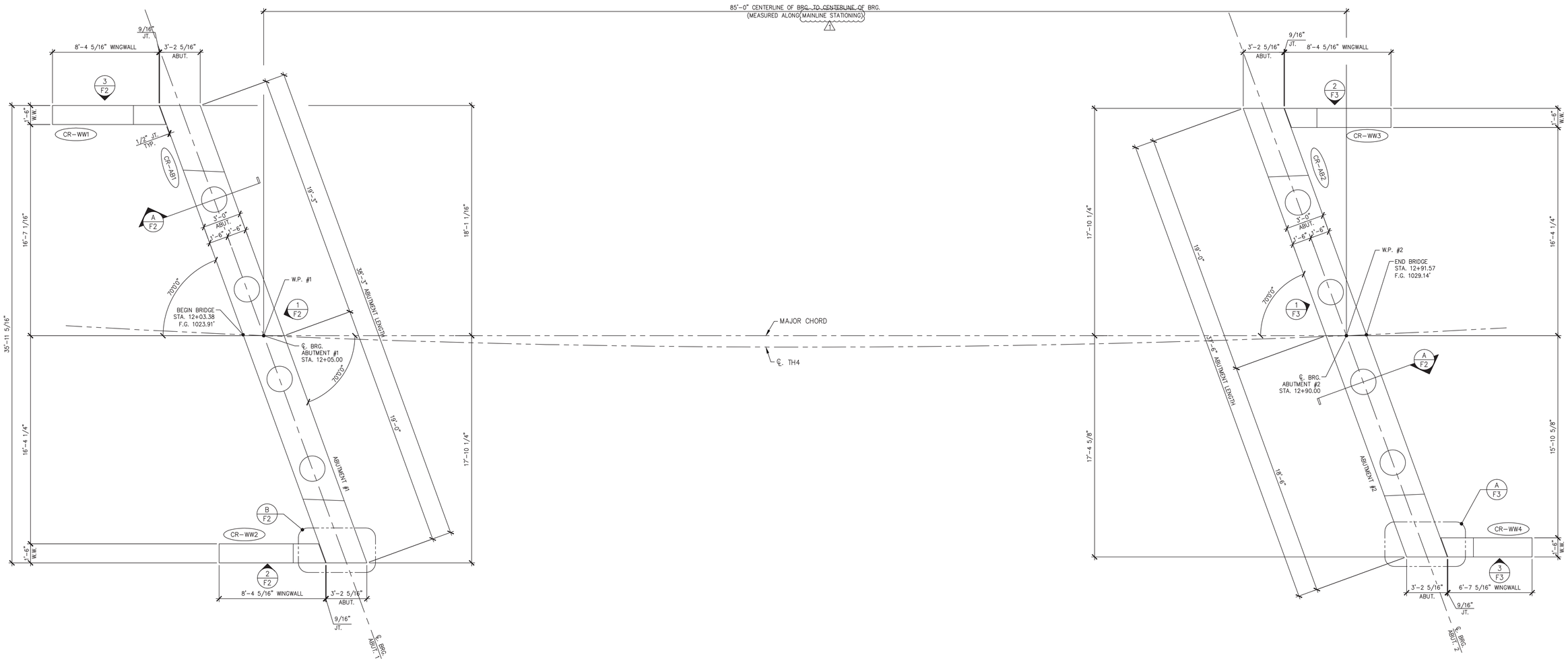

1/F1 PRECAST ABUTMENT LAYOUT

1/4" = 1'-0"

1 4-18-16 REVISED PER VTRANS COMMENTS

APPROVAL STAMP:

Vermont Agency of Transportation
RECEIVED
CK'D BY JDG/SMC OK'D BY WDL
April 18, 2016
RESUBMIT NO Approved AsNoted
BY RSY DATE 04/26/2016

J.P. CARRARA & SONS INC.
Precast & Prestress Manufacturer
2464 CASE STR., MIDDLEBURY, VERMONT 05753 Phone:(802)388-6361 Fax:(802)388-9010

CCS CONSTRUCTORS, INC
CONTRACTOR
MORRISVILLE, VT

STATE OF VERMONT AGENCY OF TRANSPORTATION
COUNTY OF ORLEANS

TOWN OF CRAFTSBURY
ROUTE NO. TH-4, RURAL MINOR COLLECTOR
BRIDGE NO.: 4 PROJECT NO.: BO 1449(34)

PRECAST ABUTMENT LAYOUT

DATE:	APR 18, 2016
SCALE:	NOTED
CHKD: R.M.	DFTM: PSS
JOB NO:	23478-015
DWG. NO:	F1

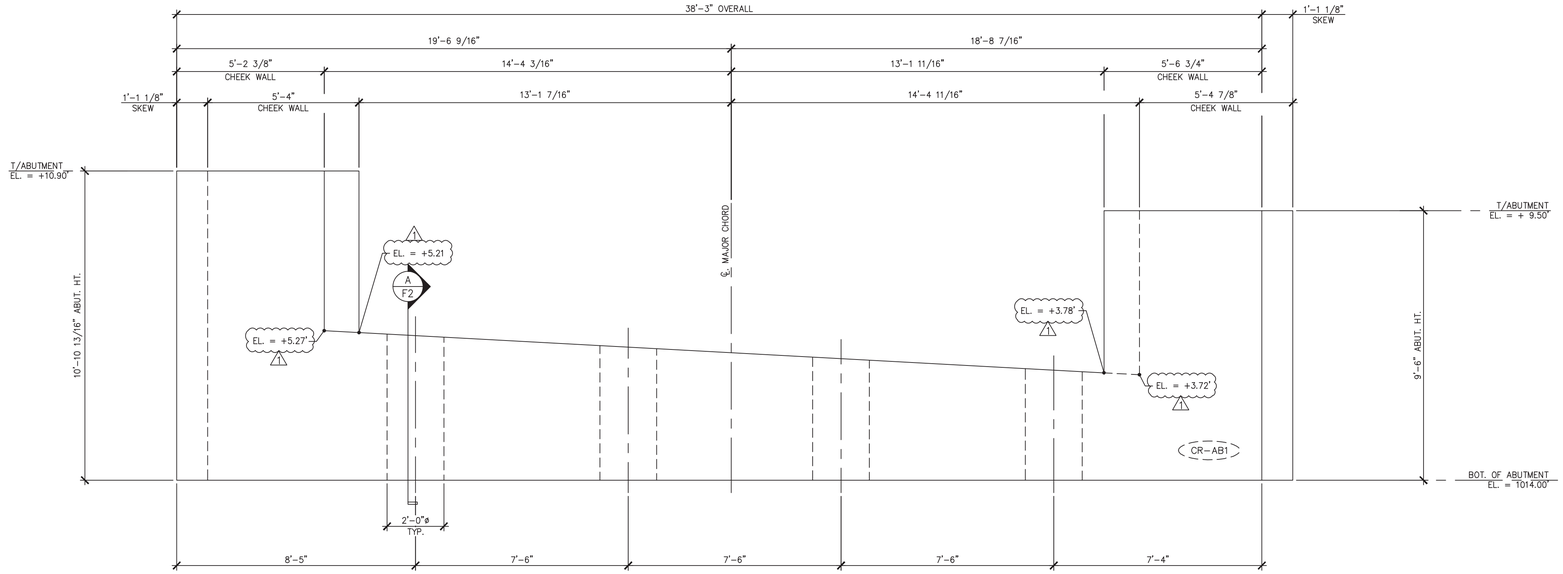

1 F2 ABUTMENT #1 ELEVATION
3/8" = 1'-0"

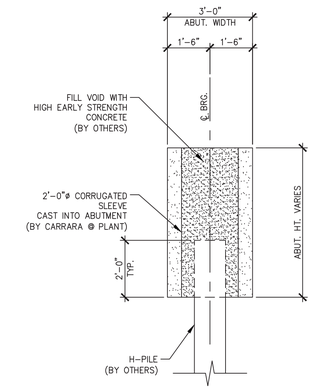

A F2 ABUTMENT SECTION
3/8" = 1'-0"

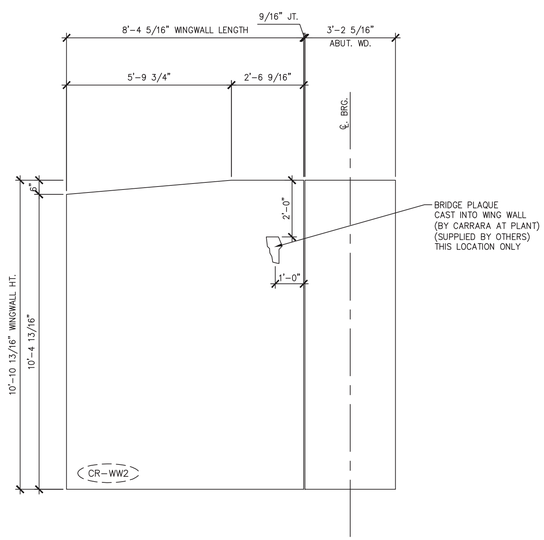

2 F2 WINGWALL #2 ELEVATION
3/8" = 1'-0"

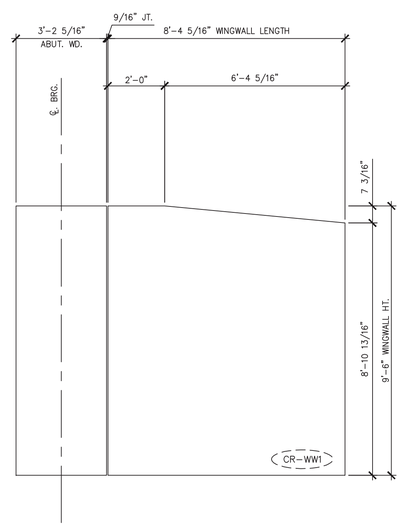

3 F2 WINGWALL #1 ELEVATION
3/8" = 1'-0"

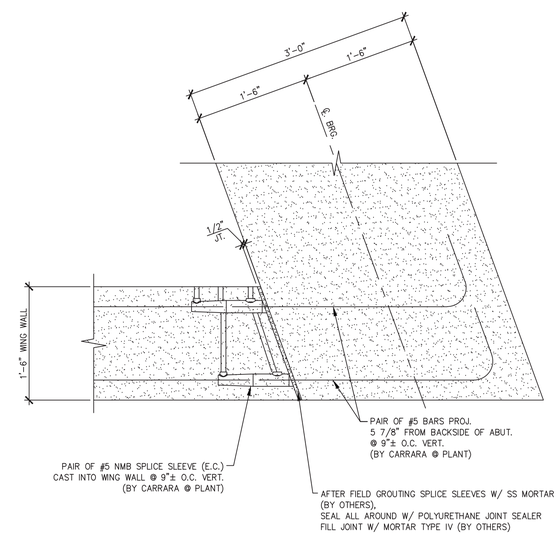

B F2 WING WALL CONNECTION DETAIL
1" = 1'-0"

△1 4-18-16 REVISED PER VTRANS COMMENTS

APPROVAL STAMP:

Vermont Agency of Transportation
RECEIVED
CK'D BY JDG/SMC OK'D BY WDL
April 18, 2016
RESUBMIT BY NO RSY
Approved AsNoted
DATE 04/26/2016

J.P. CARRARA & SONS INC.
Precast & Prestress Manufacturer
2464 CASE STR., MIDDLEBURY, VERMONT 05753 Phone:(802)388-6361 Fax:(802)388-9010

CCS CONSTRUCTORS, INC
CONTRACTOR
MORRISVILLE, VT

STATE OF VERMONT AGENCY OF TRANSPORTATION
COUNTY OF ORLEANS

TOWN OF CRAFTSBURY
ROUTE NO. TH-4, RURAL MINOR COLLECTOR
BRIDGE NO.: 4 PROJECT NO.: BO 1449(34)

ABUTMENT #1 ELEVATIONS

DATE: APR 18, 2016	
SCALE: NOTED	
CHKD: R.M.	DFTM: PSS
JOB NO: 23478-015	
DWG. NO: F2	

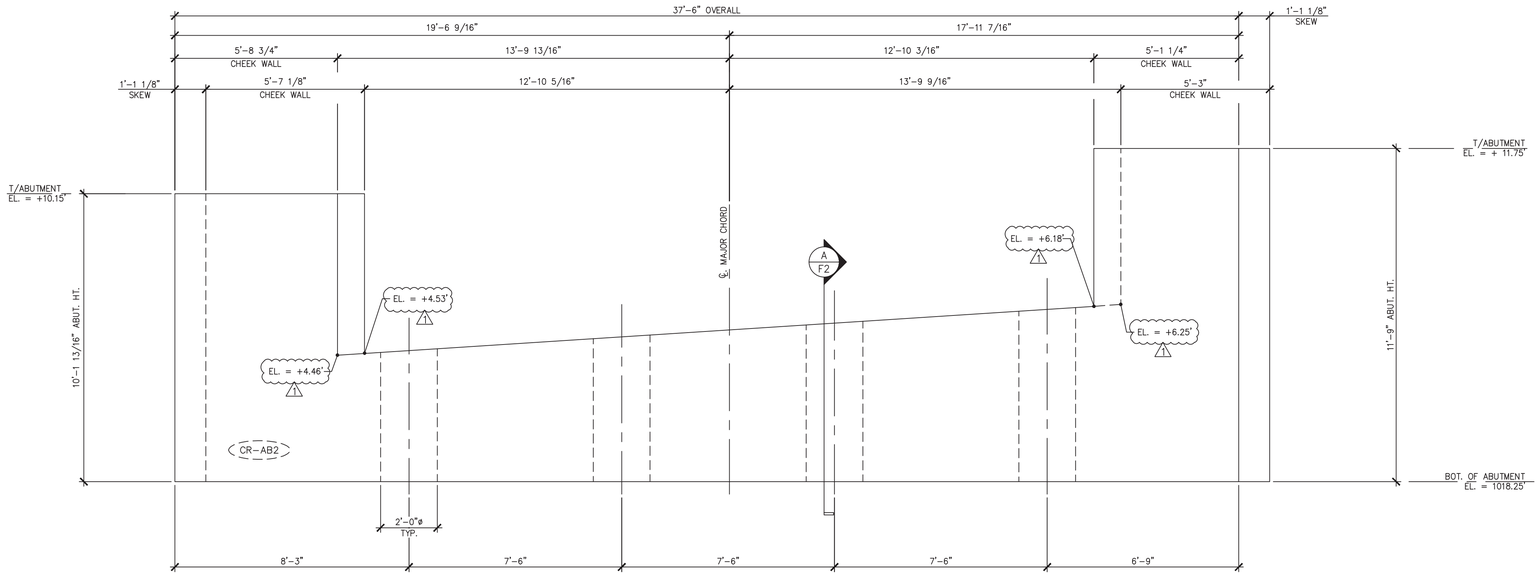

1 / F3 ABUTMENT #2 ELEVATION

3/8" = 1'-0"

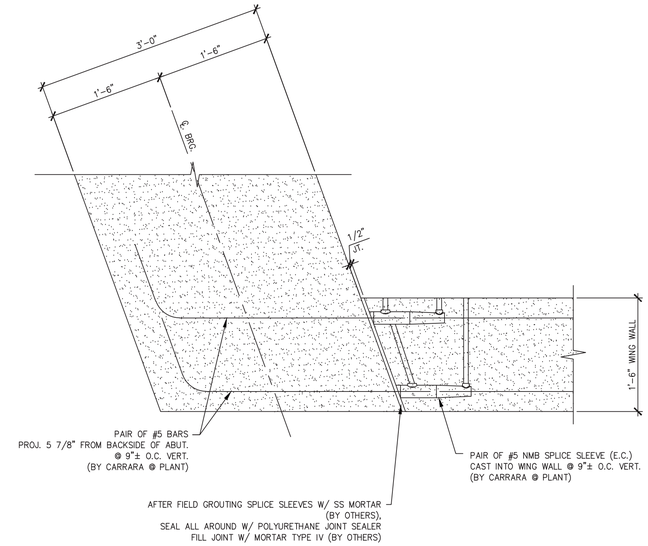

A / F3 WING WALL CONNECTION DETAIL

1" = 1'-0"

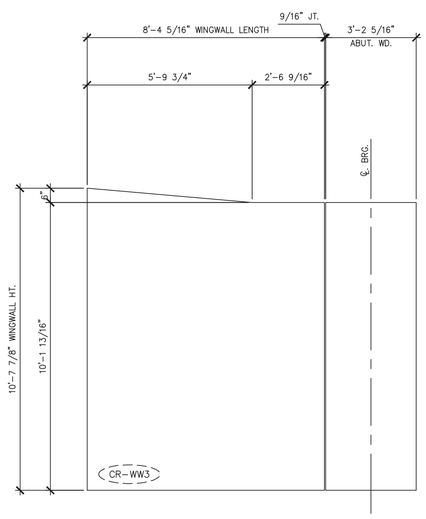

2 / F3 WINGWALL #3 ELEVATION

3/8" = 1'-0"

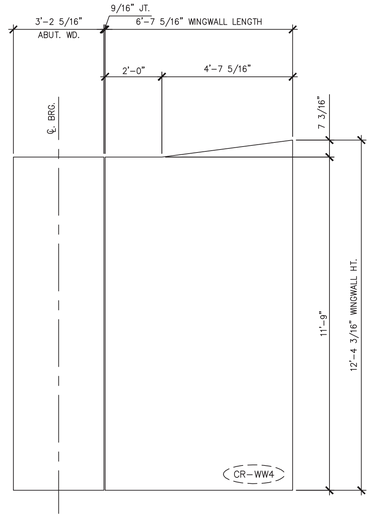

3 / F3 WINGWALL #4 ELEVATION

3/8" = 1'-0"

⚠1 4-18-16 REVISED PER VTRANS COMMENTS

APPROVAL STAMP:

Vermont Agency of Transportation
RECEIVED
Contracts & Design Management, Mail Stop 43 [DRAFT]

CK'D BY JDG/SMC OK'D BY WDL

April 18, 2016

RESUBMIT NO Approved AsNoted
BY RSY DATE 04/26/2016

J.P. CARRARA & SONS INC.
Precast & Prestress Manufacturer
2464 CASE STR., MIDDLEBURY, VERMONT 05753 Phone:(802)388-6361 Fax:(802)388-9010

CCS CONSTRUCTORS, INC
CONTRACTOR
MORRISVILLE, VT

STATE OF VERMONT AGENCY OF TRANSPORTATION
COUNTY OF ORLEANS

TOWN OF CRAFTSBURY
ROUTE NO. TH-4, RURAL MINOR COLLECTOR
BRIDGE NO.: 4 PROJECT NO.: BO 1449(34)

ABUTMENT #2 ELEVATION

DATE:	APR 18, 2016
SCALE:	NOTED
CHKD: R.M.	DFTM: PSS
JOB NO:	23478-015
DWG. NO:	F3

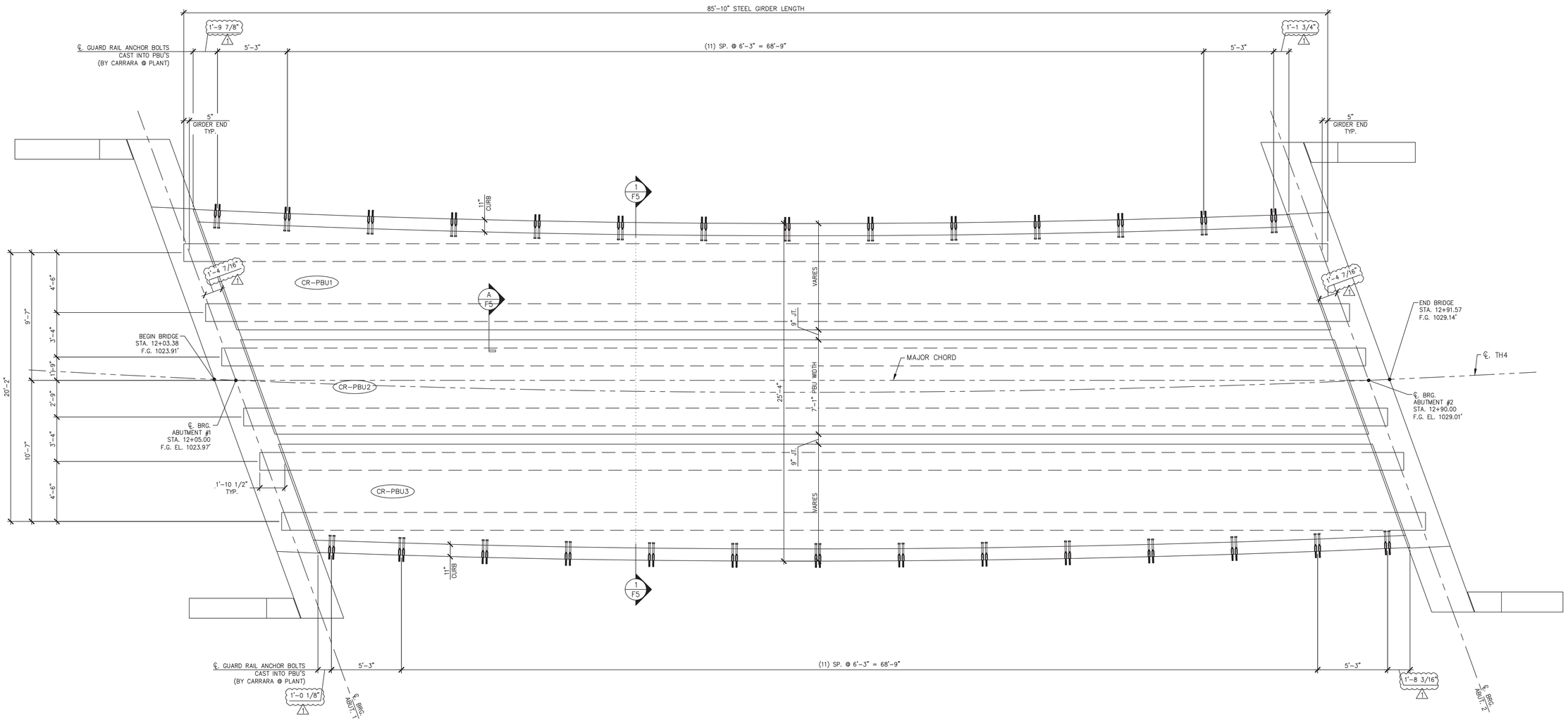

1 / F4 PBU LAYOUT

1/4" = 1'-0"

APPROVAL STAMP:

Vermont Agency of Transportation
RECEIVED
Contents of stamp issued by this office do not imply approval

CK'D BY JDG/SMC OK'D BY WDL

April 18, 2016

RESUBMIT NO Approved AsNoted

BY RSY DATE 04/26/2016

J.P. CARRARA & SONS INC.
Precast & Prestress Manufacturer
2464 CASE STR., MIDDLEBURY, VERMONT 05753 Phone:(802)388-6361 Fax:(802)388-9010

CCS CONSTRUCTORS, INC
CONTRACTOR
MORRISVILLE, VT

STATE OF VERMONT AGENCY OF TRANSPORTATION
COUNTY OF ORLEANS

TOWN OF CRAFTSBURY
ROUTE NO. TH-4, RURAL MINOR COLLECTOR
BRIDGE NO.: 4 PROJECT NO.: BO 1449(34)

PBU LAYOUT

DATE: APR 18, 2016
SCALE: NOTED
CHKD: R.M. DFTM: PSS
JOB NO: 23478-015
DWG. NO: F4

△1 4-18-16 REVISED PER VTRANS COMMENTS

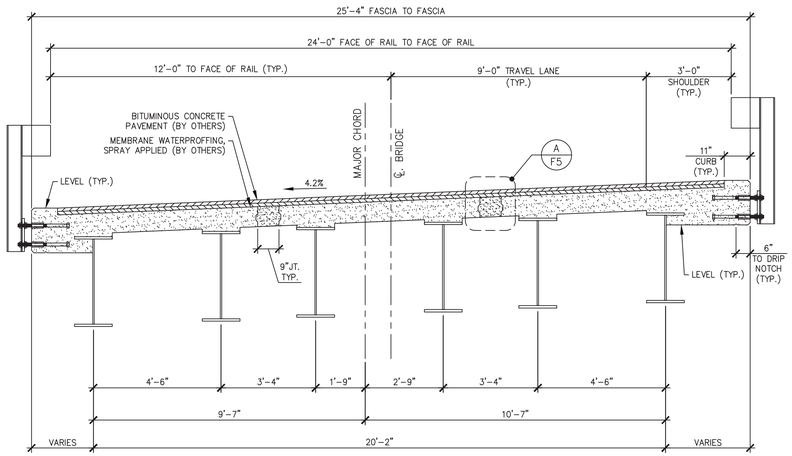

1 / F5 PBU TRANSVERSE SECTION
3/8" = 1'-0"

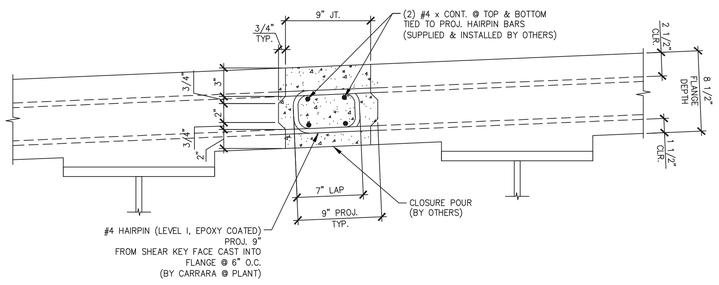

A / F5 PBU CLOSURE POUR
1 1/2" = 1'-0"

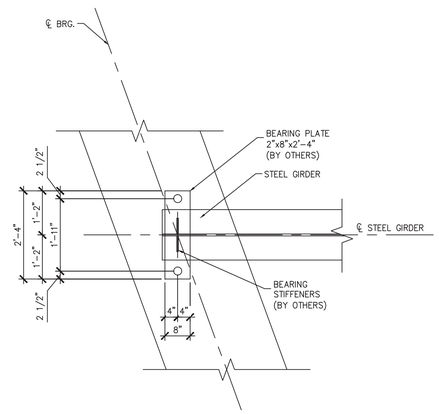

B / F5 BEARING PLAN
1 1/2" = 1'-0"

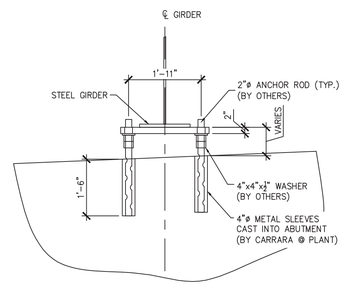

C / F5 BEARING ELEVATION
1 1/2" = 1'-0"

APPROVAL STAMP:

Vermont Agency of Transportation
RECEIVED
Electronic Image Management System Stamp Approval

CK'D BY JDG/SMC OK'D BY WDL
April 18, 2016
RESUBMIT NO Approved AsNoted
BY RSY DATE 04/26/2016

J.P. CARRARA & SONS INC.
Precast & Prestress Manufacturer
2464 CASE STR., MIDDLEBURY, VERMONT 05753 Phone:(802)388-6361 Fax:(802)388-9010

CCS CONSTRUCTORS, INC
CONTRACTOR
MORRISVILLE, VT

STATE OF VERMONT AGENCY OF TRANSPORTATION
COUNTY OF ORLEANS

TOWN OF CRAFTSBURY
ROUTE NO. TH-4, RURAL MINOR COLLECTOR
BRIDGE NO.: 4 PROJECT NO.: BO 1449(34)

TRANSVERSE SECTION & DETAILS

DATE: APR 18, 2016
SCALE: NOTED
CHKD: R.M. DFTM: PSS
JOB NO: 23478-015
DWG. NO: F5

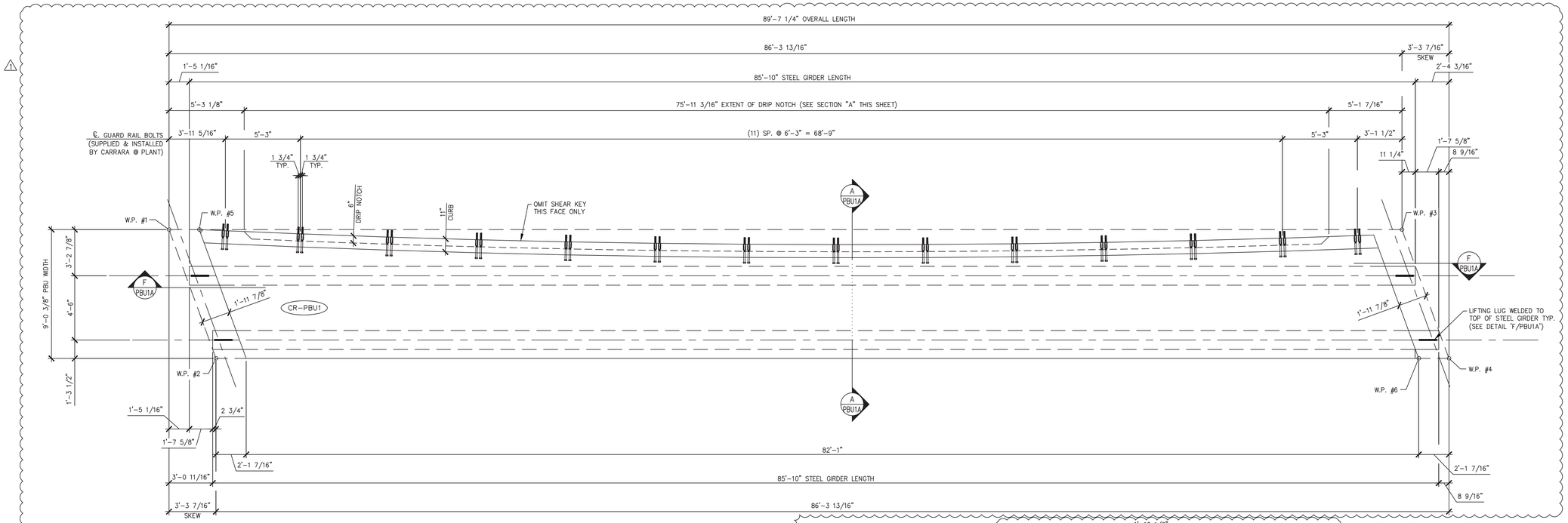

1 PBU1A DIMENSIONAL PLAN VIEW IN FORM
1/4" = 1'-0"

We are waiting for the Structural Steel re-submittal and associated welding procedures.

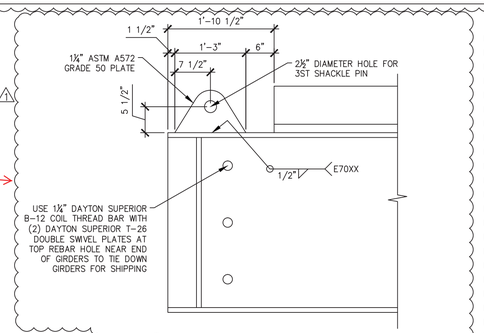

F PBU1A LIFTING ELEVATION DETAIL
3/4" = 1'-0"

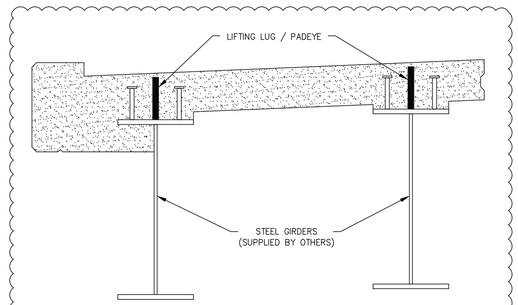

E PBU1A LIFTING SECTION
3/4" = 1'-0"

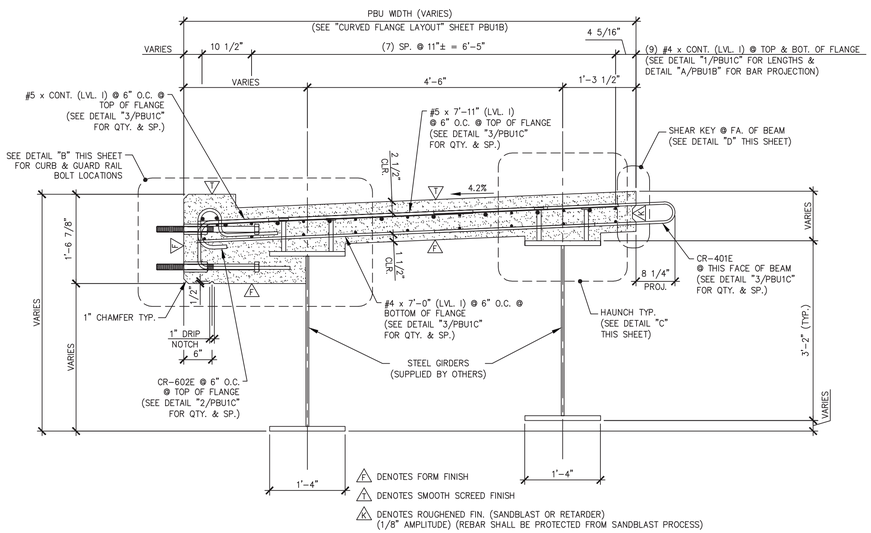

A PBU1A DIMENSIONAL & REINFORCING SECTION
3/4" = 1'-0"

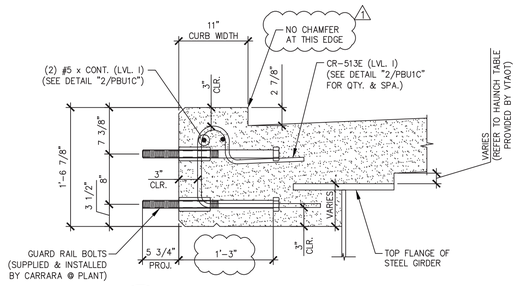

B PBU1A CURB & GUARD RAIL BOLT LOCATION DETAIL
1" = 1'-0"
TYP. BEAM REINF. NOT SHOWN FOR CLARITY

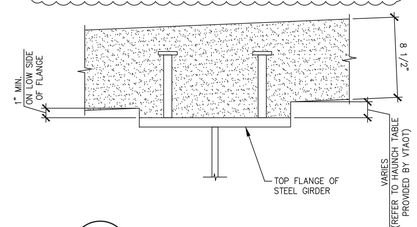

C PBU1A HAUNCH DETAIL
1 1/2" = 1'-0"

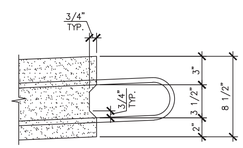

D PBU1A SHEAR KEY DETAIL
1 1/2" = 1'-0"

1 4-18-16 REVISED PER VTRANS COMMENTS

APPROVAL STAMP:

Vermont Agency of Transportation
RECEIVED
CK'D BY JDG/SMC OK'D BY WDL
April 18, 2016
RESUBMIT NO Approved AsNoted
BY RSY DATE 04/26/2016

J.P. CARRARA & SONS INC.
Precast & Prestress Manufacturer
2464 CASE STR., MIDDLEBURY, VERMONT 05753 Phone:(802)388-6361 Fax:(802)388-9010

CCS CONSTRUCTORS, INC
CONTRACTOR
MORRISVILLE, VT

STATE OF VERMONT AGENCY OF TRANSPORTATION
COUNTY OF ORLEANS

TOWN OF CRAFTSBURY
ROUTE NO. TH-4, RURAL MINOR COLLECTOR
BRIDGE NO.: 4 PROJECT NO.: BO 1449(34)

PREFABRICATED BRIDGE UNIT DETAILS "CR-PBU1"

DATE: APR 18, 2016
SCALE: NOTED
CHKD: R.M. DFTM: PSS
JOB NO: 23478-015
DWG. NO: PBU1A

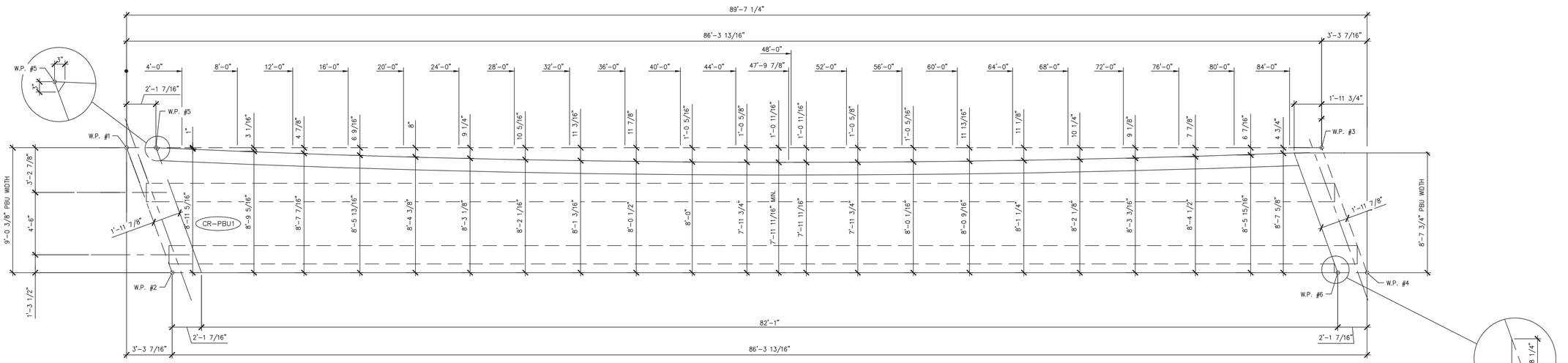

1 PBU1B CURVED FLANGE LAYOUT

1/4" = 1'-0"

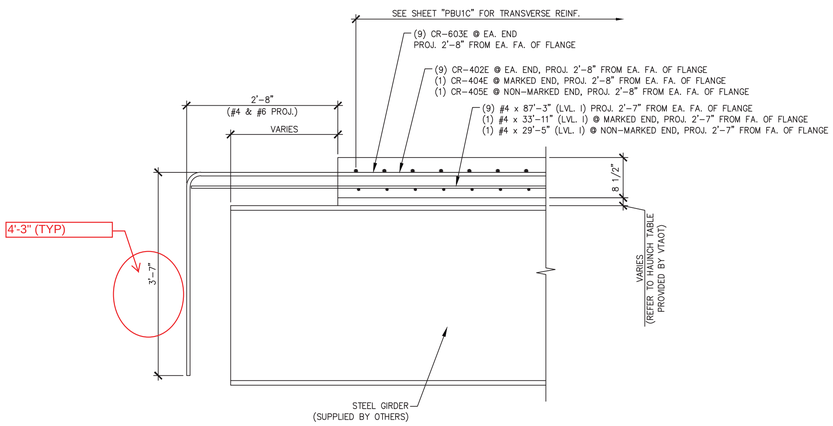

A PBU1B END ELEVATION

3/4" = 1'-0"

APPROVAL STAMP:

Vermont Agency of Transportation
RECEIVED
CK'D BY JDG/SMC OK'D BY WDL
April 18, 2016
RESUBMIT NO Approved AsNoted
BY RSY DATE 04/26/2016

J.P. CARRARA & SONS INC.
Precast & Prestress Manufacturer
2464 CASE STR., MIDDLEBURY, VERMONT 05753 Phone:(802)388-6361 Fax:(802)388-9010

CCS CONSTRUCTORS, INC
CONTRACTOR
MORRISVILLE, VT

STATE OF VERMONT AGENCY OF TRANSPORTATION
COUNTY OF ORLEANS

TOWN OF CRAFTSBURY
ROUTE NO. TH-4, RURAL MINOR COLLECTOR
BRIDGE NO.: 4 PROJECT NO.: BO 1449(34)

PREFABRICATED BRIDGE UNIT DETAILS "CR-PBU1"

DATE:	APR 18, 2016
SCALE:	NOTED
CHKD: R.M.	DFTM: PSS
JOB NO:	23478-015
DWG. NO:	PBU1B

⚠1 4-18-16 REVISED PER VTRANS COMMENTS

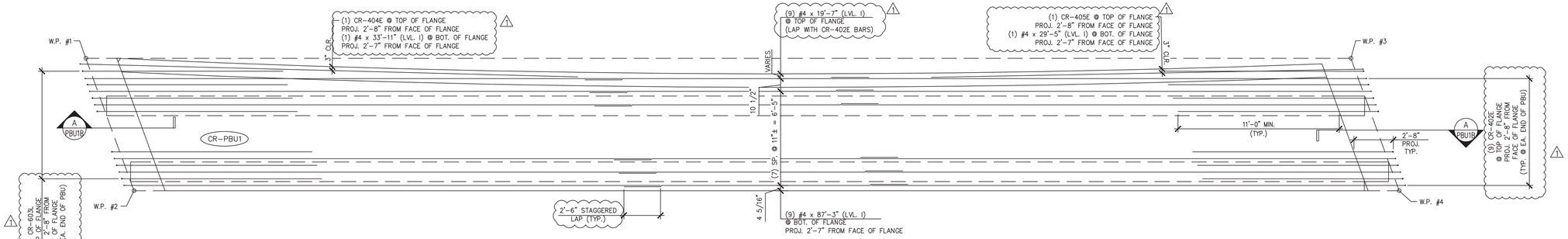

1 PBU1C REINFORCING PLAN VIEW IN FORM (FOR LONGITUDINAL BARS)

1/4" = 1'-0"

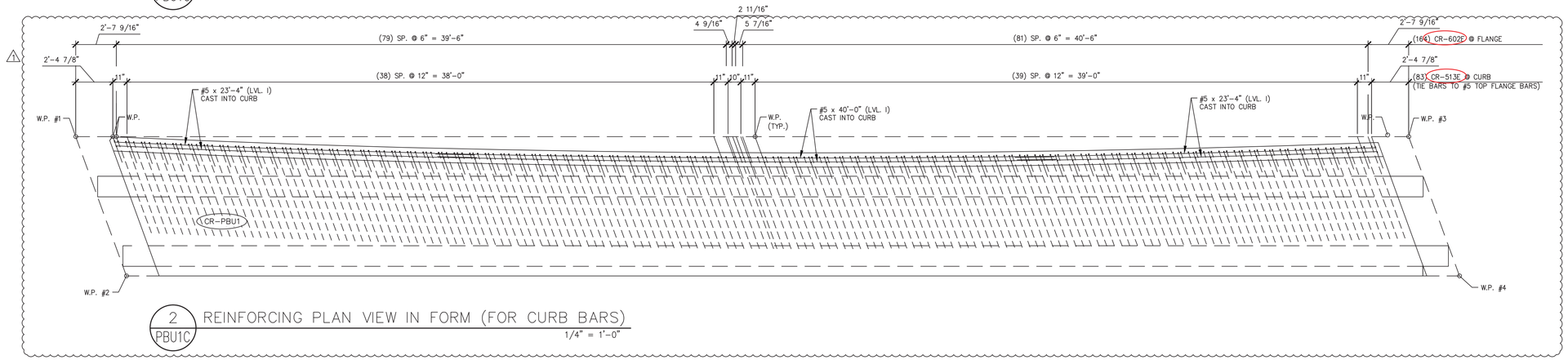

2 PBU1C REINFORCING PLAN VIEW IN FORM (FOR CURB BARS)

1/4" = 1'-0"

Bars 602E and 513E not found on sheet M2

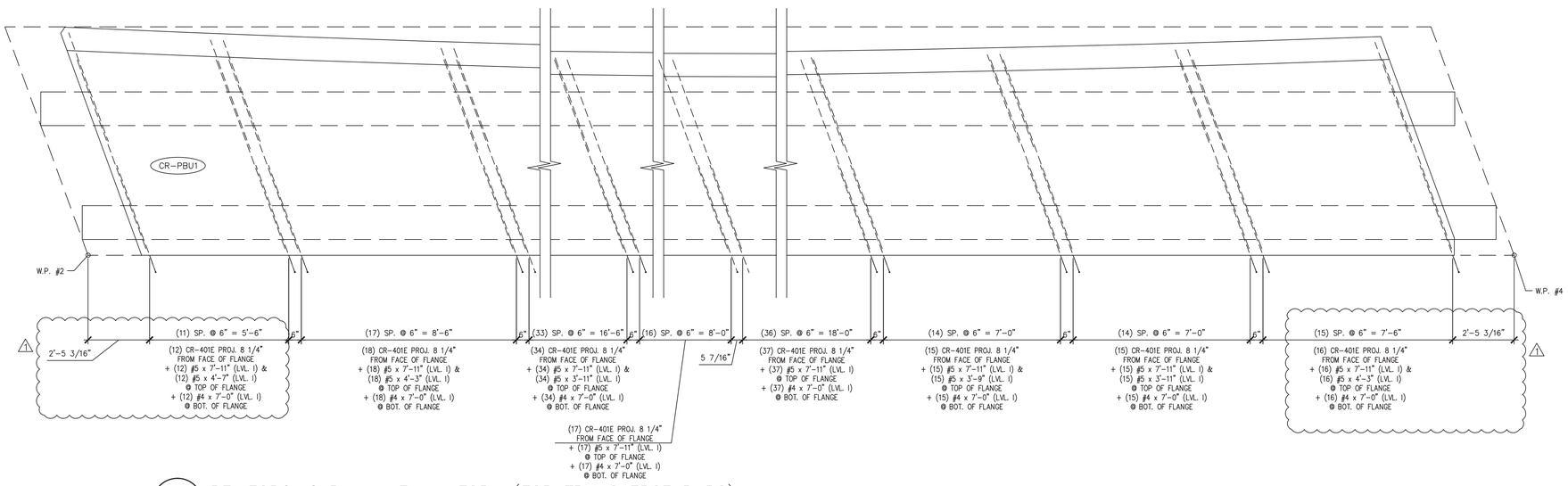

3 PBU1C REINFORCING PLAN VIEW IN FORM (FOR TRANSVERSE BARS)

3/8" = 1'-0"

TOTAL PBU WT. (INCLUDING WT. OF STEEL GIRDERS): 66.22 T

MARK: CR-PBU1	QTY.: 1	WT.: 47.91 T	VOL.: 23.66 cy

MATERIAL LIST / PREFABRICATED BRIDGE UNIT

ITEM	MARK	DESCRIPTION	QTY.
1	CR-401E	#4 BENT BAR (LEVEL I, EPOXY COATED)	164
2	CR-402E	#4 BENT BAR (LEVEL I, EPOXY COATED)	18
3	CR-404E	#4 BENT BAR (LEVEL I, EPOXY COATED)	1
4	CR-405E	#4 BENT BAR (LEVEL I, EPOXY COATED)	1
5			
6	CR-513E	#5 BENT BAR (LEVEL I, EPOXY COATED)	83
7			
8	CR-602E	#6 BENT BAR (LEVEL I, EPOXY COATED)	164
9	CR-603E	#6 BENT BAR (LEVEL I, EPOXY COATED)	18
10			
11		#4 x 87'-3" (W/ (2) 2'-2" STAGGERED LAP) (40' + 20' + 32'-3") (LVL. I, EPOXY COATED)	9
12		#4 x 33'-11" (LEVEL I, EPOXY COATED)	1
13		#4 x 29'-5" (LEVEL I, EPOXY COATED)	1
14		#4 x 19'-7" (LEVEL I, EPOXY COATED)	9
15		#4 x 7'-0" (LEVEL I, EPOXY COATED)	164
16			
17		#5 x 40'-0" (LEVEL I, EPOXY COATED)	2
18		#5 x 23'-4" (LEVEL I, EPOXY COATED)	4
19		#5 x 7'-11" (LEVEL I, EPOXY COATED)	164
20		#5 x 4'-7" (LEVEL I, EPOXY COATED)	12
21		#5 x 4'-3" (LEVEL I, EPOXY COATED)	34
22		#5 x 3'-11" (LEVEL I, EPOXY COATED)	49
23		#5 x 3'-9" (LEVEL I, EPOXY COATED)	15
		1 1/4"ø x 1'-9 3/4" GUARD RAIL BOLTS (ASTM A 449)	56
		LIFTING LUG (1 1/4" ASTM A572 GRADE 50 PLATE)	4

1 4-18-16 REVISED PER VTRANS COMMENTS

APPROVAL STAMP:

Vermont Agency of Transportation
RECEIVED
CK'D BY JDG/SMC OK'D BY WDL
April 18, 2016
RESUBMIT NO Approved AsNoted
BY RSY DATE 04/26/2016

J.P. CARRARA & SONS INC.
Precast & Prestress Manufacturer
2464 CASE STR., MIDDLEBURY, VERMONT 05753 Phone:(802)388-6361 Fax:(802)388-9010

CCS CONSTRUCTORS, INC
CONTRACTOR
MORRISVILLE, VT

STATE OF VERMONT AGENCY OF TRANSPORTATION
COUNTY OF ORLEANS

TOWN OF CRAFTSBURY
ROUTE NO. TH-4, RURAL MINOR COLLECTOR
BRIDGE NO.: 4 PROJECT NO.: BO 1449(34)

PREFABRICATED BRIDGE UNIT DETAILS "CR-PBU1"

DATE: APR 18, 2016
SCALE: NOTED
CHKD: R.M. DFTM: PSS
JOB NO: 23478-015
DWG. NO: PBU1C

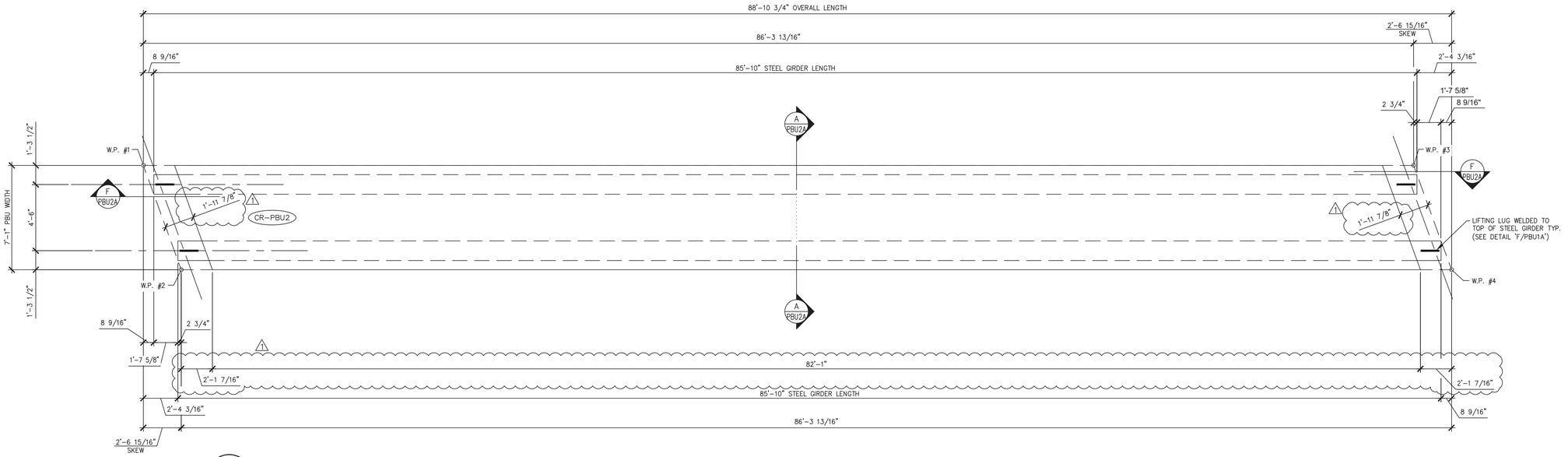

1 PBU2A DIMENSIONAL PLAN VIEW IN FORM
1/4" = 1'-0"

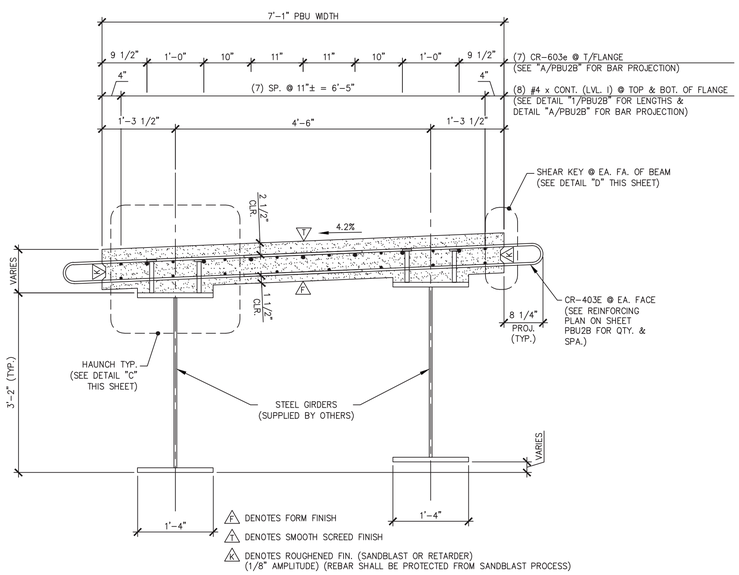

A PBU2A DIMENSIONAL & REINFORCING SECTION
3/4" = 1'-0"

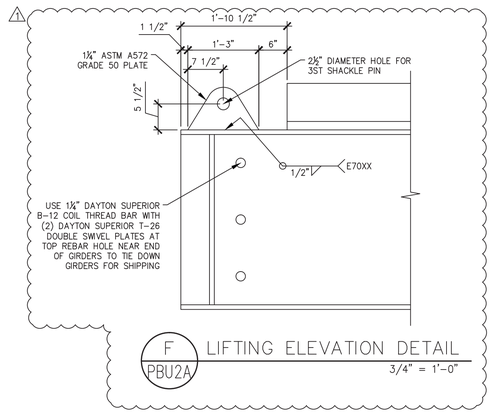

F PBU2A LIFTING ELEVATION DETAIL
3/4" = 1'-0"

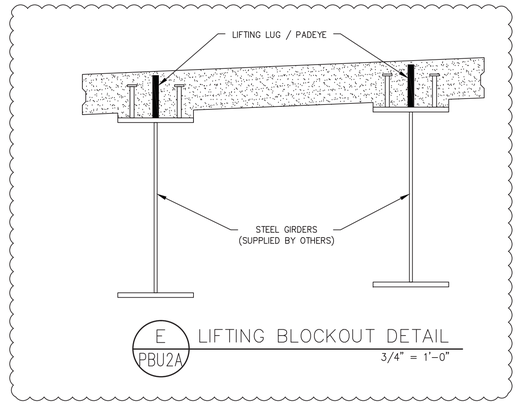

E PBU2A LIFTING BLOCKOUT DETAIL
3/4" = 1'-0"

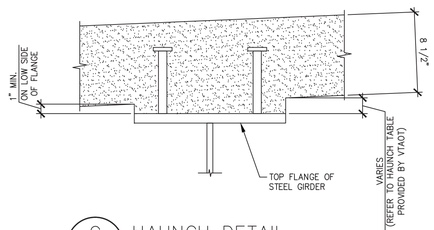

C PBU2A HAUNCH DETAIL
1 1/2" = 1'-0"

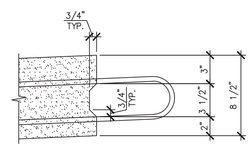

D PBU2A SHEAR KEY DETAIL
1 1/2" = 1'-0"

1 4-18-16 REVISED PER VTRANS COMMENTS

APPROVAL STAMP:

Vermont Agency of Transportation
RECEIVED
CK'D BY JDG/SMC OK'D BY WDL
April 18, 2016
RESUBMIT NO Approved AsNoted
BY RSY DATE 04/26/2016

J.P. CARRARA & SONS INC.
Precast & Prestress Manufacturer
2464 CASE STR., MIDDLEBURY, VERMONT 05753 Phone:(802)388-6361 Fax:(802)388-9010

CCS CONSTRUCTORS, INC
CONTRACTOR
MORRISVILLE, VT

STATE OF VERMONT AGENCY OF TRANSPORTATION
COUNTY OF ORLEANS

TOWN OF CRAFTSBURY
ROUTE NO. TH-4, RURAL MINOR COLLECTOR
BRIDGE NO.: 4 PROJECT NO.: BO 1449(34)

PREFABRICATED BRIDGE UNIT DETAILS "CR-PBU2"

DATE: APR 18, 2016
SCALE: NOTED
CHKD: R.M. DFTM: PSS
JOB NO: 23478-015
DWG. NO: PBU2A

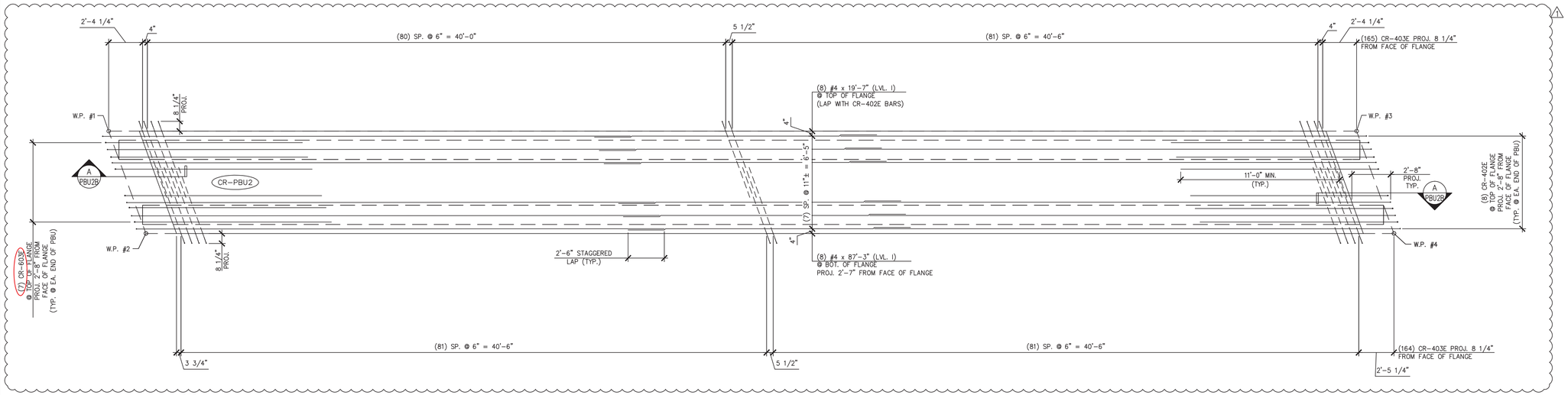

1 PBU2B REINFORCING PLAN VIEW IN FORM

1/4" = 1'-0"

Bar 603E not found on sheet M2

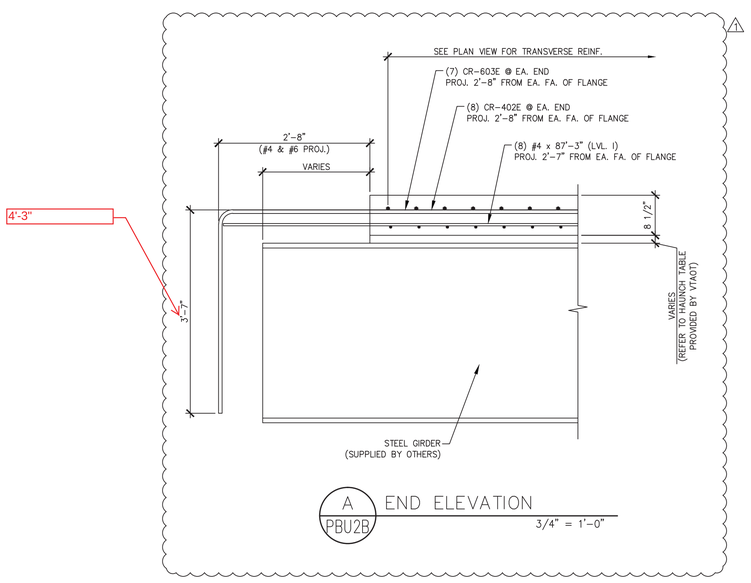

A PBU2B END ELEVATION

3/4" = 1'-0"

TOTAL PBU WT. (INCLUDING WT. OF STEEL GIRDERS): 50.55 T

MARK: CR-PBU2	QTY.: 1	WT.: 32.24 T	VOL.: 15.92 cy

MATERIAL LIST / PREFABRICATED BRIDGE UNIT

ITEM	MARK	DESCRIPTION	QTY.
1	CR-402E	#4 BENT BAR (LEVEL I, EPOXY COATED)	16
2	CR-403E	#4 BENT BAR (LEVEL I, EPOXY COATED)	329
3			
4	CR-603E	#6 BENT BAR (LEVEL I, EPOXY COATED)	14
5			
6			
7		#4 x 87'-3" (W/ (2) 2'-6" STAGGERED LAP) (40' + 20' + 32'-3") (LVL. I, EPOXY COATED)	8
8		#4 x 19'-7" (LEVEL I, EPOXY COATED)	8
9			
10		LIFTING LUG (1 1/4" ASTM A572 GRADE 50 PLATE)	4
11			
12			

APPROVAL STAMP:

Vermont Agency of Transportation
RECEIVED
CK'D BY JDG/SMC OK'D BY WDL
April 18, 2016
RESUBMIT NO Approved AsNoted
BY RSY DATE 04/26/2016

J.P. CARRARA & SONS INC.
Precast & Prestress Manufacturer
2464 CASE STR., MIDDLEBURY, VERMONT 05753 Phone:(802)388-6361 Fax:(802)388-9010

CCS CONSTRUCTORS, INC
CONTRACTOR
MORRISVILLE, VT

STATE OF VERMONT AGENCY OF TRANSPORTATION
COUNTY OF ORLEANS

TOWN OF CRAFTSBURY
ROUTE NO. TH-4, RURAL MINOR COLLECTOR
BRIDGE NO.: 4 PROJECT NO.: BO 1449(34)

PREFABRICATED BRIDGE UNIT DETAILS "CR-PBU2"

DATE: APR 18, 2016
SCALE: NOTED
CHKD: R.M. DFTM: PSS
JOB NO: 23478-015
DWG. NO: PBU2B

4-18-16 REVISED PER VTRANS COMMENTS

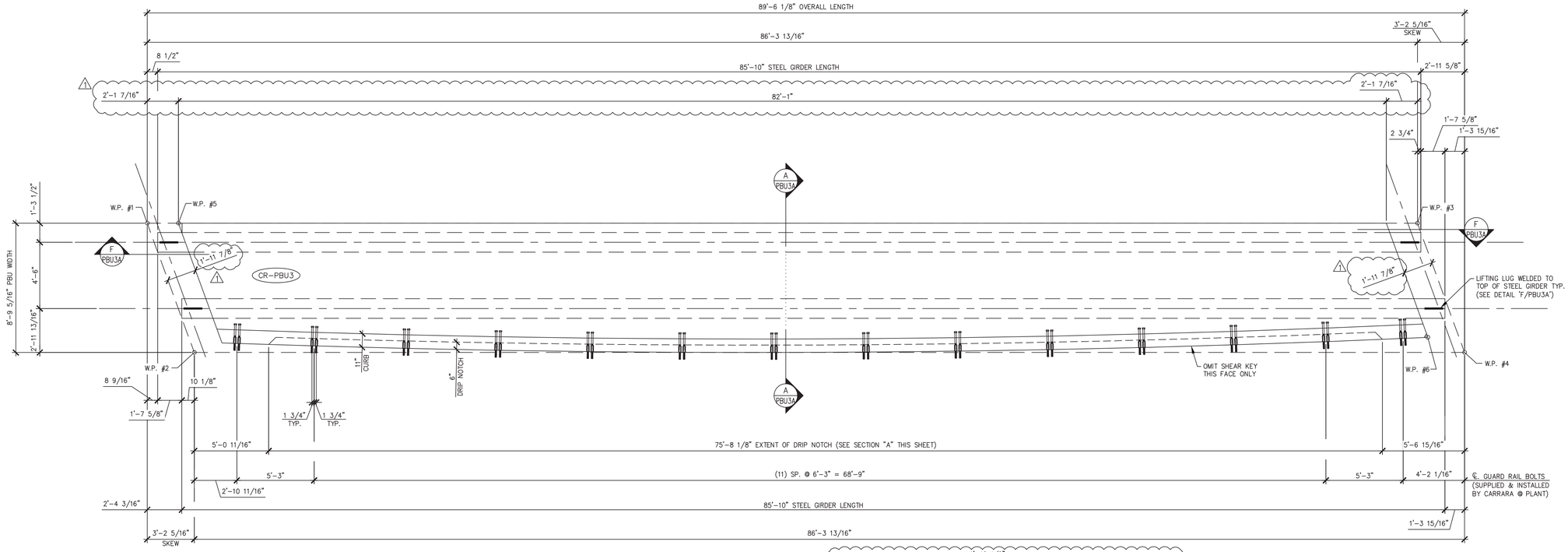

1 PBU3A DIMENSIONAL PLAN VIEW IN FORM

1/4" = 1'-0"

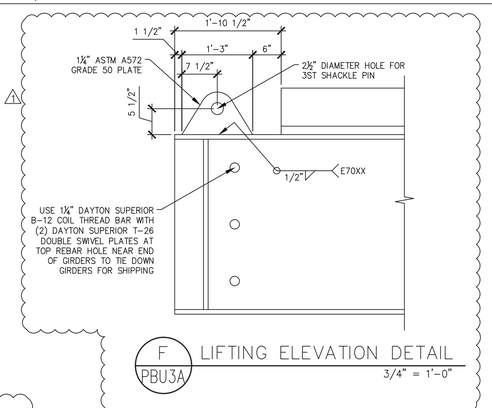

F PBU3A LIFTING ELEVATION DETAIL

3/4" = 1'-0"

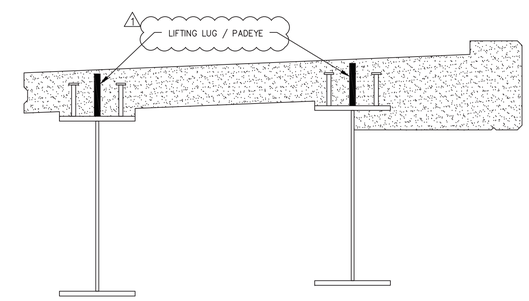

E PBU3A LIFTING BLOCKOUT DETAIL

3/4" = 1'-0"

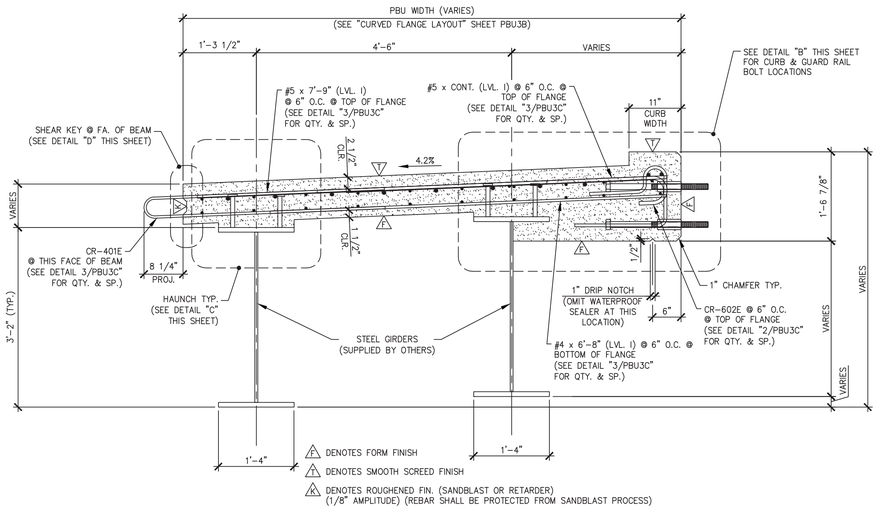

A PBU3A DIMENSIONAL & REINFORCING SECTION AT MIDSPAN

3/4" = 1'-0"

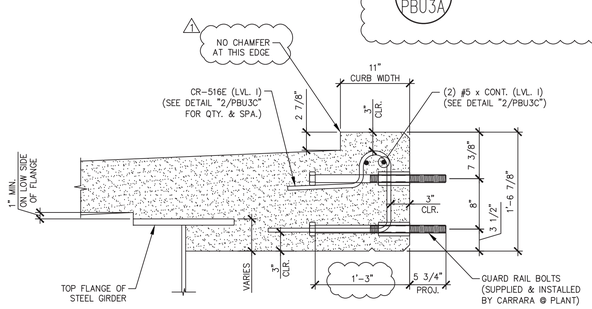

B PBU3A CURB & GUARD RAIL BOLT LOCATION DETAIL

1" = 1'-0"

TYP. BEAM REINF. NOT SHOWN FOR CLARITY

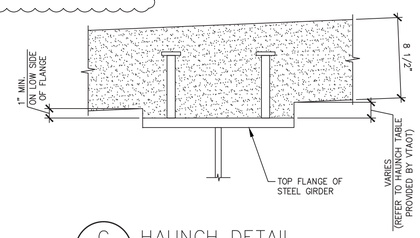

C PBU3A HAUNCH DETAIL

1 1/2" = 1'-0"

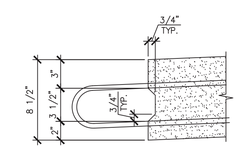

D PBU3A SHEAR KEY DETAIL

1 1/2" = 1'-0"

1 4-18-16 REVISED PER VTRANS COMMENTS

APPROVAL STAMP:

Vermont Agency of Transportation
RECEIVED
CK'D BY JDG/SMC OK'D BY WDL
April 18, 2016
RESUBMIT NO Approved AsNoted
BY RSY DATE 04/26/2016

J.P. CARRARA & SONS INC.
Precast & Prestress Manufacturer
2464 CASE STR., MIDDLEBURY, VERMONT 05753 Phone:(802)388-6361 Fax:(802)388-9010

CCS CONSTRUCTORS, INC
CONTRACTOR
MORRISVILLE, VT

STATE OF VERMONT AGENCY OF TRANSPORTATION
COUNTY OF ORLEANS

TOWN OF CRAFTSBURY
ROUTE NO. TH-4, RURAL MINOR COLLECTOR
BRIDGE NO.: 4 PROJECT NO.: BO 1449(34)

PREFABRICATED BRIDGE UNIT DETAILS "CR-PBU3"

DATE: APR 18, 2016	
SCALE: NOTED	
CHKD: R.M.	DFTM: PSS
JOB NO: 23478-015	
DWG. NO: PBU3A	

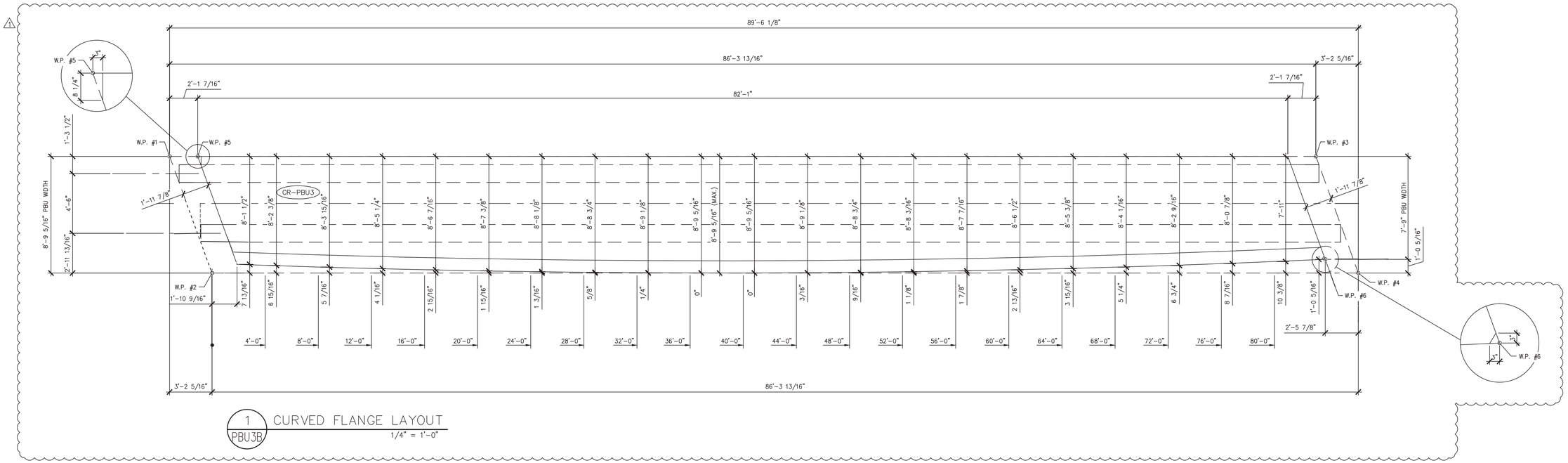

1 PBU3B CURVED FLANGE LAYOUT
1/4" = 1'-0"

Bar 603E not found on sheet M2

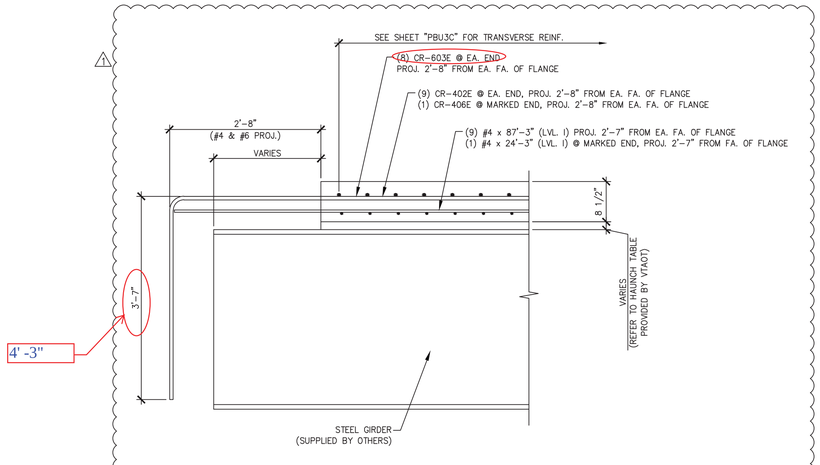

A PBU3B END ELEVATION
3/4" = 1'-0"

1 4-18-16 REVISED PER VTRANS COMMENTS

APPROVAL STAMP:

Vermont Agency of Transportation
RECEIVED
CK'D BY JDG/SMC OK'D BY WDL
April 18, 2016
RESUBMIT NO Approved AsNoted
BY RSY DATE 04/26/2016

J.P. CARRARA & SONS INC.
Precast & Prestress Manufacturer
2464 CASE STR., MIDDLEBURY, VERMONT 05753 Phone:(802)388-6361 Fax:(802)388-9010

CCS CONSTRUCTORS, INC
CONTRACTOR
MORRISVILLE, VT

STATE OF VERMONT AGENCY OF TRANSPORTATION
COUNTY OF ORLEANS

TOWN OF CRAFTSBURY
ROUTE NO. TH-4, RURAL MINOR COLLECTOR
BRIDGE NO.: 4 PROJECT NO.: BO 1449(34)

PREFABRICATED BRIDGE UNIT DETAILS "CR-PBU3"

DATE: APR 18, 2016
SCALE: NOTED
CHKD: R.M. DFTM: PSS
JOB NO: 23478-015
DWG. NO: PBU3B

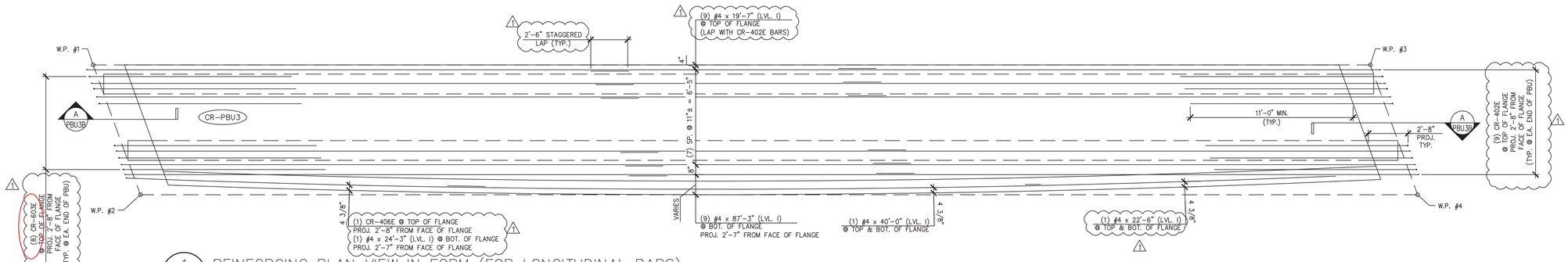

1 PBU3C REINFORCING PLAN VIEW IN FORM (FOR LONGITUDINAL BARS)
1/4" = 1'-0"

Bars 602E, 603E, and 516E are not found on sheet M2

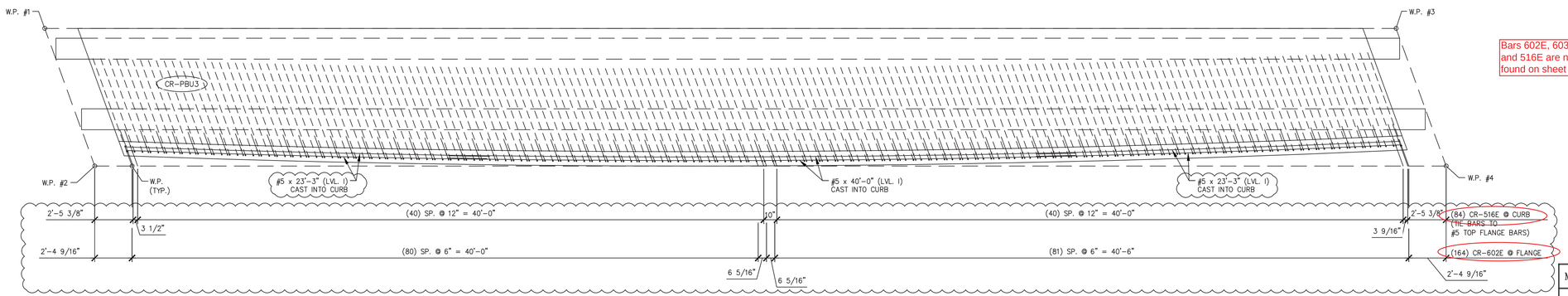

2 PBU3C REINFORCING PLAN VIEW IN FORM (FOR CURB BARS)
1/4" = 1'-0"

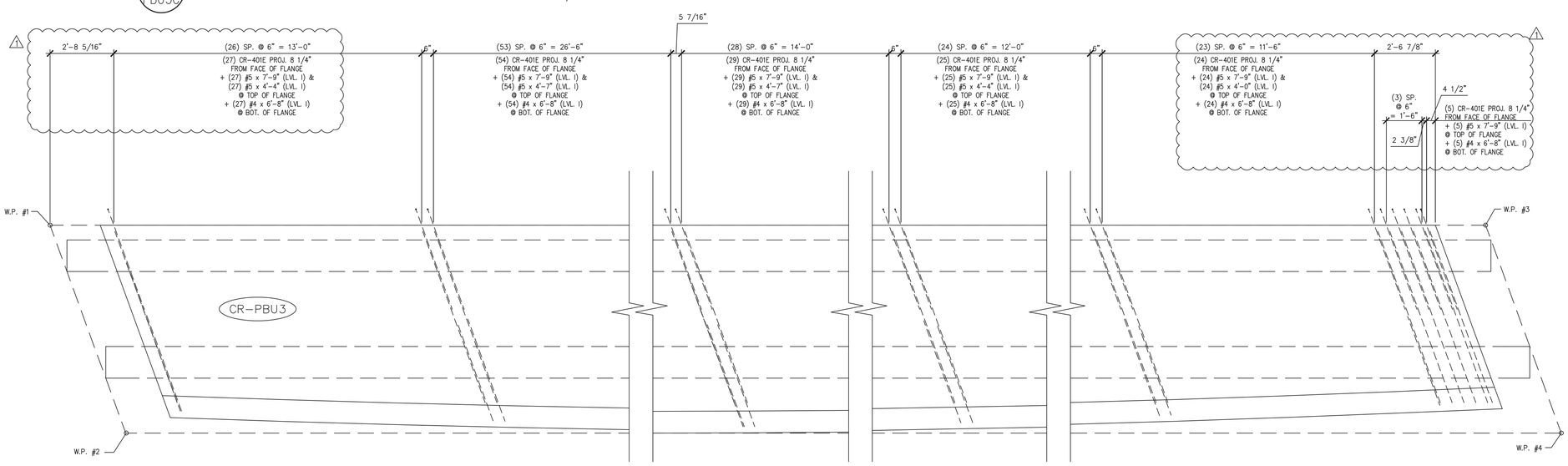

3 PBU3C REINFORCING PLAN VIEW IN FORM (FOR TRANSVERSE BARS)
3/8" = 1'-0"

TOTAL PBU WT. (INCLUDING WT. OF STEEL GIRDERS): 68.19 T

MARK: CR-PBU3	QTY.: 1	WT.: 49.88 T	VOL.: 24.63 cy

MATERIAL LIST / PREFABRICATED BRIDGE UNIT

ITEM	MARK	DESCRIPTION	QTY.
1	CR-401E	#4 BENT BAR (LEVEL I, EPOXY COATED)	164
2	CR-402E	#4 BENT BAR (LEVEL I, EPOXY COATED)	18
3	CR-406E	#4 BENT BAR (LEVEL I, EPOXY COATED)	1
4	CR-516E	#5 BENT BAR (LEVEL I, EPOXY COATED)	84
5			
6	CR-602E	#6 BENT BAR (LEVEL I, EPOXY COATED)	164
7	CR-603E	#6 BENT BAR (LEVEL I, EPOXY COATED)	16
8			
9		#4 x 87'-3" (W/ (2) 2'-2" STAGGERED LAP) (40' + 20' + 32'-3") (LVL. I, EPOXY COATED)	9
10		#4 x 24'-3" (LEVEL I, EPOXY COATED)	1
11		#4 x 22'-6" (LEVEL I, EPOXY COATED)	2
12		#4 x 19'-7" (LEVEL I, EPOXY COATED)	9
13		#4 x 6'-8" (LEVEL I, EPOXY COATED)	164
14			
15			
16		#5 x 40'-0" (LEVEL I, EPOXY COATED)	2
17		#5 x 23'-3" (LEVEL I, EPOXY COATED)	4
18		#5 x 7'-9" (LEVEL I, EPOXY COATED)	164
19		#5 x 4'-7" (LEVEL I, EPOXY COATED)	83
20		#5 x 4'-4" (LEVEL I, EPOXY COATED)	54
21		#5 x 4'-0" (LEVEL I, EPOXY COATED)	24
22			
23			
24		1 1/4"ø x 1'-9 3/4" GUARD RAIL BOLTS (ASTM A 449)	56
25			
26		LIFTING LUG (1 1/4" ASTM A572 GRADE 50 PLATE)	4

APPROVAL STAMP:

Vermont Agency of Transportation
RECEIVED
CK'D BY JDG/SMC OK'D BY WDL
April 18, 2016
RESUBMIT NO Approved AsNoted
BY RSY DATE 04/26/2016

J.P. CARRARA & SONS INC.
Precast & Prestress Manufacturer
2464 CASE STR., MIDDLEBURY, VERMONT 05753 Phone:(802)388-6361 Fax:(802)388-9010

CCS CONSTRUCTORS, INC
CONTRACTOR
MORRISVILLE, VT

STATE OF VERMONT AGENCY OF TRANSPORTATION
COUNTY OF ORLEANS

DATE: APR 18, 2016
SCALE: NOTED

TOWN OF CRAFTSBURY
ROUTE NO. TH-4, RURAL MINOR COLLECTOR
BRIDGE NO.: 4 PROJECT NO.: BO 1449(34)

CHKD: R.M. DFTM: PSS
JOB NO: 23478-015

PREFABRICATED BRIDGE UNIT DETAILS "CR-PBU3"

DWG. NO: PBU3C

4-18-16 REVISED PER VTRANS COMMENTS

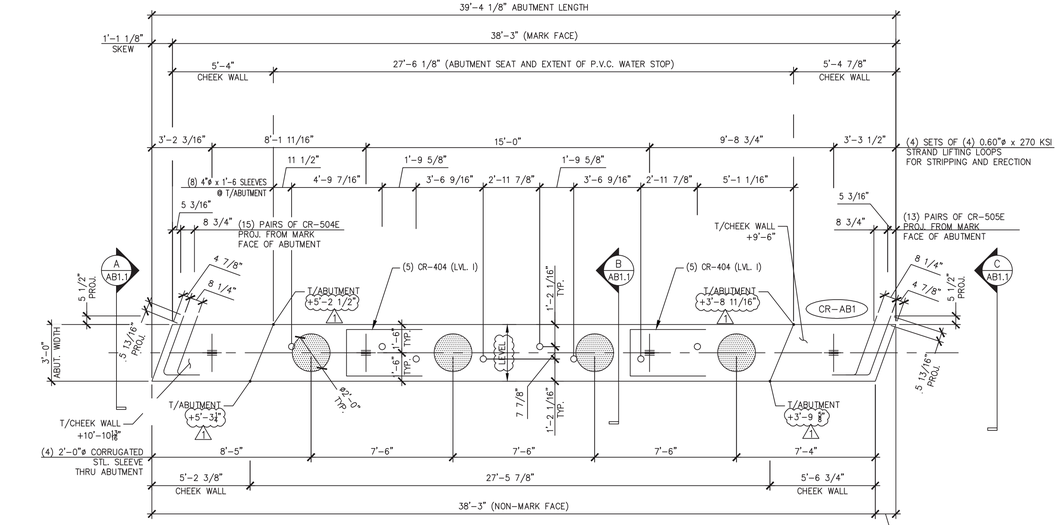

1 / AB1 ABUTMENT DIMENSIONAL PLAN VIEW IN FORM

1/4" = 1'-0"

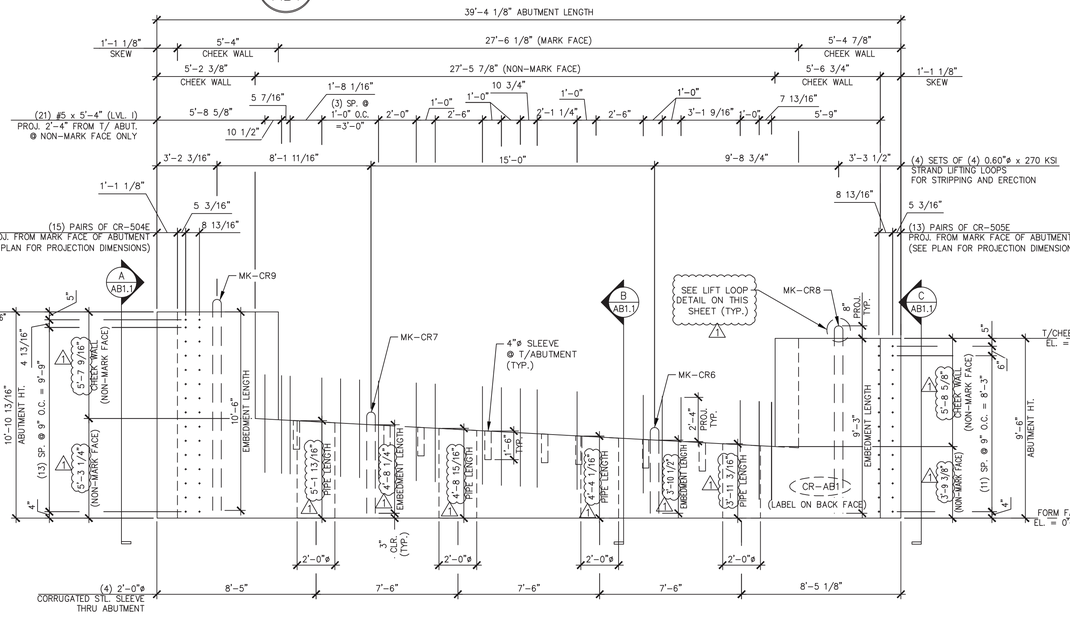

2 / AB1 ABUTMENT DIMENSIONAL NON-MARK FACE ELEVATION

1/4" = 1'-0"

(ONLY #5 x 5'-4" (LVL. I) @ NON MARK FACE PROJECTING BARS SHOWN.
ALL OTHER PROJECTING BARS ARE NOT SHOWN HERE FOR CLARITY.
SEE DETAILS "4/AB1 & B/AB1.1" FOR ADDITIONAL PROJECTING BARS)

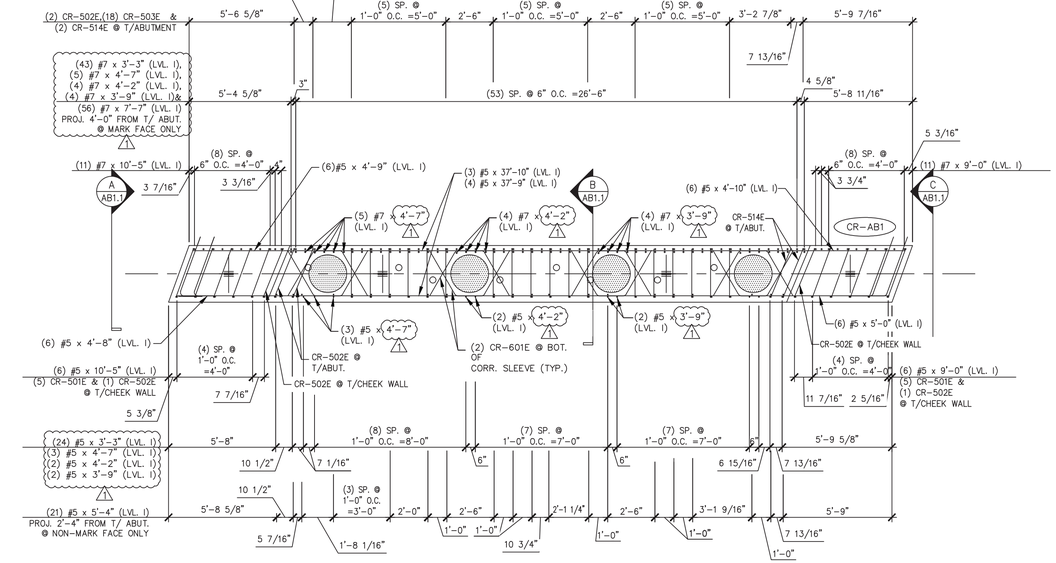

3 / AB1 ABUTMENT REINFORCING PLAN VIEW IN FORM

1/4" = 1'-0"

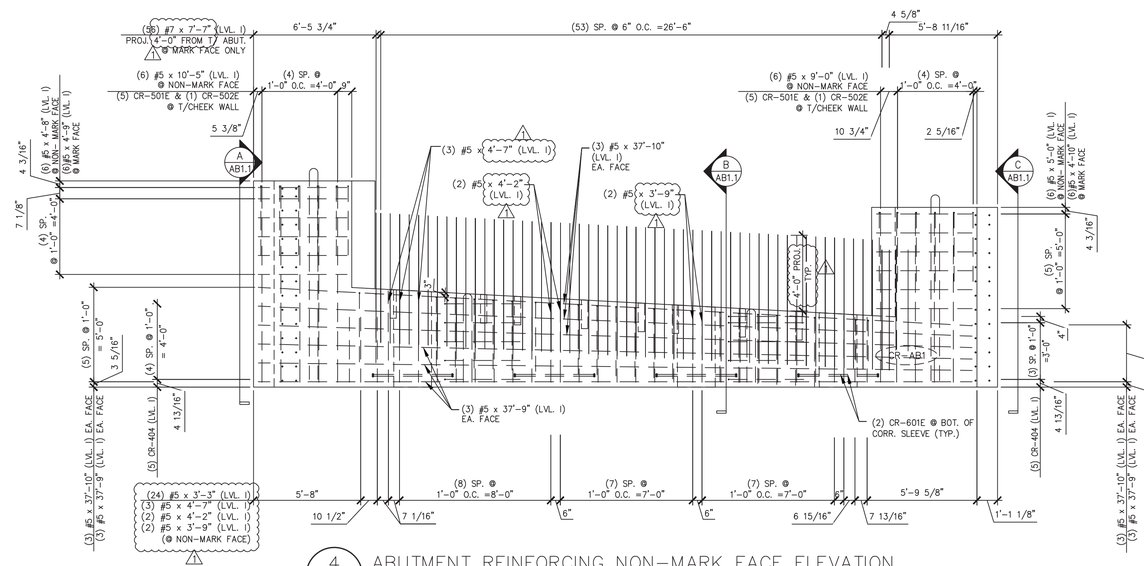

4 / AB1 ABUTMENT REINFORCING NON-MARK FACE ELEVATION

1/4" = 1'-0"

(ONLY #7 x 7'-7" (LVL. I) @ MARK FACE PROJECTING BARS SHOWN.
ALL OTHER PROJECTING BARS ARE NOT SHOWN HERE FOR CLARITY.
SEE DETAILS "2/AB1 & B/AB1.1" FOR ADDITIONAL PROJECTING BARS)

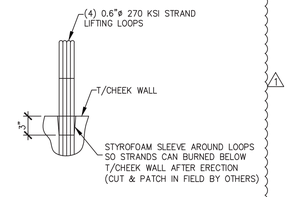

LIFT LOOP RECESS DETAILS

1" = 1'-0"

1 4-18-16 REVISED PER VTRANS COMMENTS

APPROVAL STAMP:

Vermont Agency of Transportation
RECEIVED
CK'D BY JDG/SMC OK'D BY WDL
April 18, 2016
RESUBMIT NO Approved AsNoted
BY RSY DATE 04/26/2016

J.P. CARRARA & SONS INC.
Precast & Prestress Manufacturer
2464 CASE STR., MIDDLEBURY, VERMONT 05753 Phone:(802)388-6361 Fax:(802)388-9010

CCS CONSTRUCTORS, INC
CONTRACTOR
MORRISVILLE, VT

STATE OF VERMONT AGENCY OF TRANSPORTATION
COUNTY OF ORLEANS

TOWN OF CRAFTSBURY
ROUTE NO. TH-4, RURAL MINOR COLLECTOR
BRIDGE NO.: 4 PROJECT NO.: BO 1449(34)

PRECAST ABUTMENT DETAILS "CR-AB1"

DATE:	APR 18, 2016
SCALE:	NOTED
CHKD: R.M.	DFTM: PSS
JOB NO:	23478-015
DWG. NO:	AB1

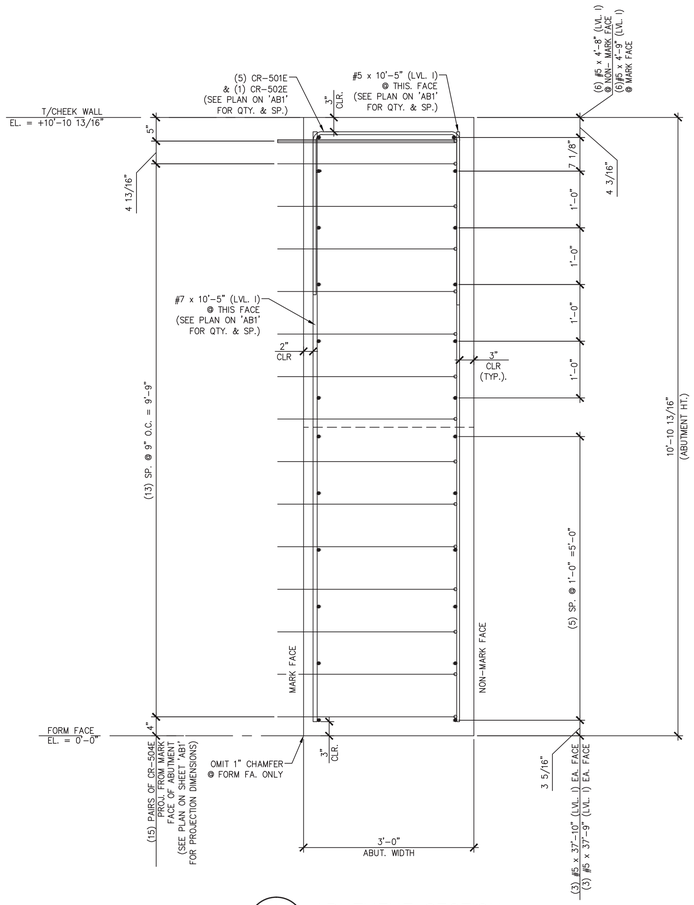

A AB1.1 ABUTMENT SECTION
3/4" = 1'-0"

SHOP NOTE:
ALL EDGES OF ABUTMENT SHALL RECEIVE A 1" CHAMFER (U.N.O.)

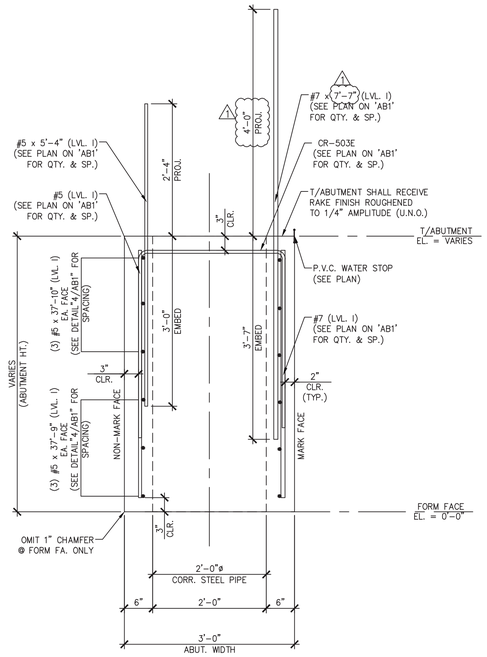

B AB1.1 ABUTMENT SECTION
3/4" = 1'-0"

SHOP NOTE:
ALL EDGES OF ABUTMENT SHALL RECEIVE A 1" CHAMFER (U.N.O.)

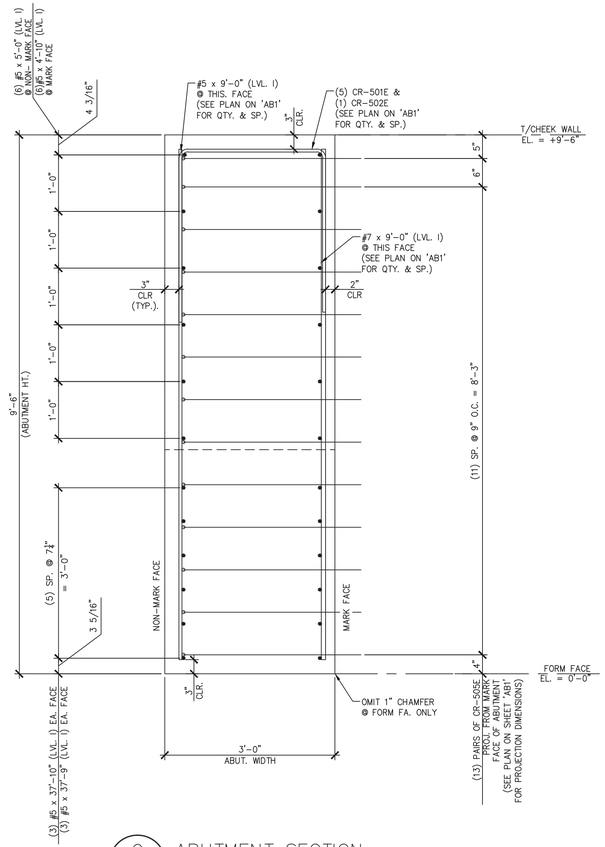

C AB1.1 ABUTMENT SECTION
3/4" = 1'-0"

SHOP NOTE:
ALL EDGES OF ABUTMENT SHALL RECEIVE A 1" CHAMFER (U.N.O.)

SHOP NOTE:
f'c = 5,000 PSI
f'ci = 5,000 PSI
MIX: #425M-NO DCI

SHOP NOTES:
1. ALL EDGES OF ABUTMENT SHALL RECEIVE A 1" CHAMFER (U.N.O.)

MARK: CR-AB1	QTY.: 1	WT.: 52.63 TONS	VOL.: 25.99 cy

MATERIAL LIST / ABUTMENT

ITEM	MARK	DESCRIPTION	QTY.
1	CR-601E	#6 BENT BAR (LEVEL I, EPOXY COATED)	8
2	CR-501E	#5 BENT BAR (LEVEL I, EPOXY COATED)	10
3	CR-502E	#5 BENT BAR (LEVEL I, EPOXY COATED)	4
4	CR-503E	#5 BENT BAR (LEVEL I, EPOXY COATED)	18
5	CR-504E	#5 BENT BAR (LEVEL I, EPOXY COATED)	30
6	CR-505E	#5 BENT BAR (LEVEL I, EPOXY COATED)	26
7	CR-514E	#5 BENT BAR (LEVEL I, EPOXY COATED)	2
8	CR-404E	#4 BENT BAR (LEVEL I, EPOXY COATED)	10
9		#5 x 3'-3" (LEVEL I, EPOXY COATED)	24
10		#5 x 3'-9" (LEVEL I, EPOXY COATED)	2
11		#5 x 4'-2" (LEVEL I, EPOXY COATED)	2
12		#5 x 4'-7" (LEVEL I, EPOXY COATED)	3
13		#5 x 4'-8" (LEVEL I, EPOXY COATED)	6
14		#5 x 4'-9" (LEVEL I, EPOXY COATED)	6
15		#5 x 4'-10" (LEVEL I, EPOXY COATED)	6
16		#5 x 5'-0" (LEVEL I, EPOXY COATED) 1	6
17		#5 x 5'-4" (LEVEL I, EPOXY COATED)	21
18		#5 x 9'-0" (LEVEL I, EPOXY COATED)	6
19		#5 x 10'-5" (LEVEL I, EPOXY COATED)	6
20		#5 x 37'-9" (LEVEL I, EPOXY COATED)	6
21		#5 x 37'-10" (LEVEL I, EPOXY COATED)	6
22		#7 x 3'-3" (LEVEL I, EPOXY COATED)	43
23		#7 x 3'-9" (LEVEL I, EPOXY COATED)	4
24		#7 x 4'-2" (LEVEL I, EPOXY COATED)	4
25		#7 x 4'-7" (LEVEL I, EPOXY COATED)	5
26		#7 x 7'-7" (LEVEL I, EPOXY COATED)	56
27		#7 x 9'-0" (LEVEL I, EPOXY COATED)	11
28		#7 x 10'-5" (LEVEL I, EPOXY COATED)	11
29		2'-0" ø x 5'-1 13/16" CORRUGATED STEEL PIPE (GALV.)	1
30		2'-0" ø x 4'-8 15/16" CORRUGATED STEEL PIPE (GALV.)	1
31		2'-0" ø x 4'-4 1/16" CORRUGATED STEEL PIPE (GALV.)	1
32		2'-0" ø x 3'-11 3/16" CORRUGATED STEEL PIPE (GALV.)	1
33		4" ø x 1'-6" METAL SLEEVES (GALV.)	8
34	MK-CR6	SET OF (4) 0.60"ø X 4'-6 1/2" STRAND LIFTING LOOPS	1
35	MK-CR7	SET OF (4) 0.60"ø X 5'-4 1/4" STRAND LIFTING LOOPS	1
36	MK-CR8	SET OF (4) 0.60"ø X 9'-10" STRAND LIFTING LOOPS	1
37	MK-CR9	SET OF (4) 0.60"ø X 11'-2" STRAND LIFTING LOOPS	1
38		P.V.C. WATER STOP (SUPPLIED BY OTHERS)	27.5 LF.

1 4-18-16 REVISED PER VTRANS COMMENTS

APPROVAL STAMP:

Vermont Agency of Transportation
RECEIVED
CK'D BY JDG/SMC OK'D BY WDL
April 18, 2016
RESUBMIT NO Approved AsNoted
BY RSY DATE 04/26/2016

J.P. CARRARA & SONS INC.
Precast & Prestress Manufacturer
2464 CASE STR., MIDDLEBURY, VERMONT 05753 Phone:(802)388-6361 Fax:(802)388-9010

CCS CONSTRUCTORS, INC
CONTRACTOR
MORRISVILLE, VT

STATE OF VERMONT AGENCY OF TRANSPORTATION
COUNTY OF ORLEANS

TOWN OF CRAFTSBURY
ROUTE NO. TH-4, RURAL MINOR COLLECTOR
BRIDGE NO.: 4 PROJECT NO.: BO 1449(34)

PRECAST ABUTMENT DETAILS 'CR-AB1'

DATE: APR 18, 2016
SCALE: NOTED
CHKD: R.M. DFTM: PSS
JOB NO: 23478-015
DWG. NO: AB1.1

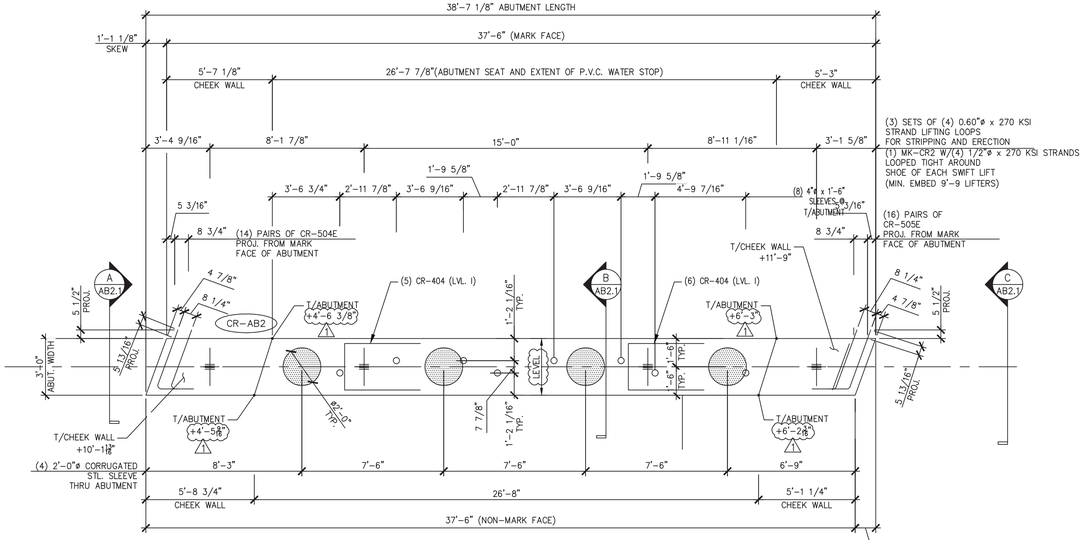

1 AB2 ABUTMENT DIMENSIONAL PLAN VIEW IN FORM

1/4" = 1'-0"

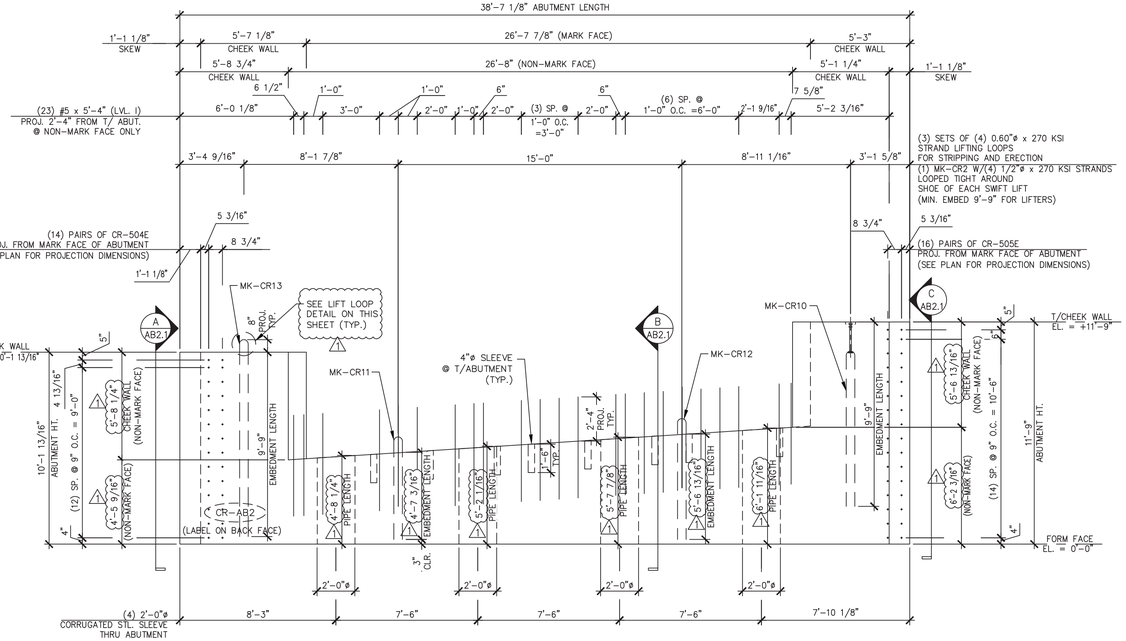

2 AB2 ABUTMENT DIMENSIONAL NON-MARK FACE ELEVATION

(ONLY #5 x 5'-4" (LVL. I) @ NON-MARK FACE PROJECTING BARS SHOWN. ALL OTHER PROJECTING BARS ARE NOT SHOWN HERE FOR CLARITY. SEE DETAILS "4/AB2 & B/AB2.1" FOR ADDITIONAL PROJECTING BARS)

1/4" = 1'-0"

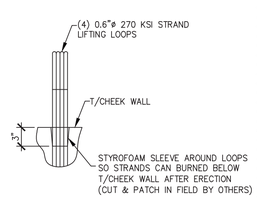

LIFT LOOP RECESS DETAILS

1" = 1'-0"

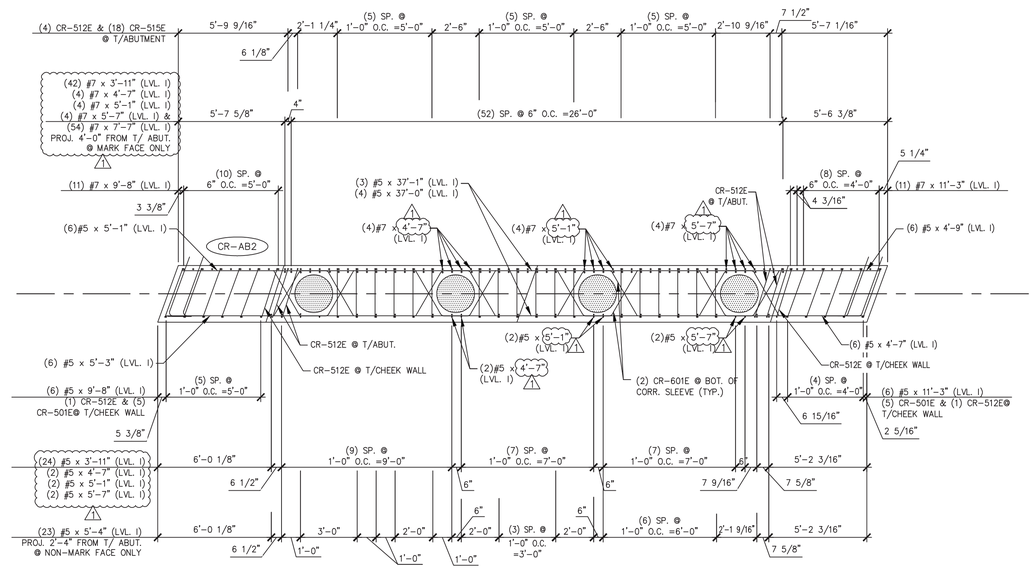

3 AB2 ABUTMENT REINFORCING PLAN VIEW IN FORM

1/4" = 1'-0"

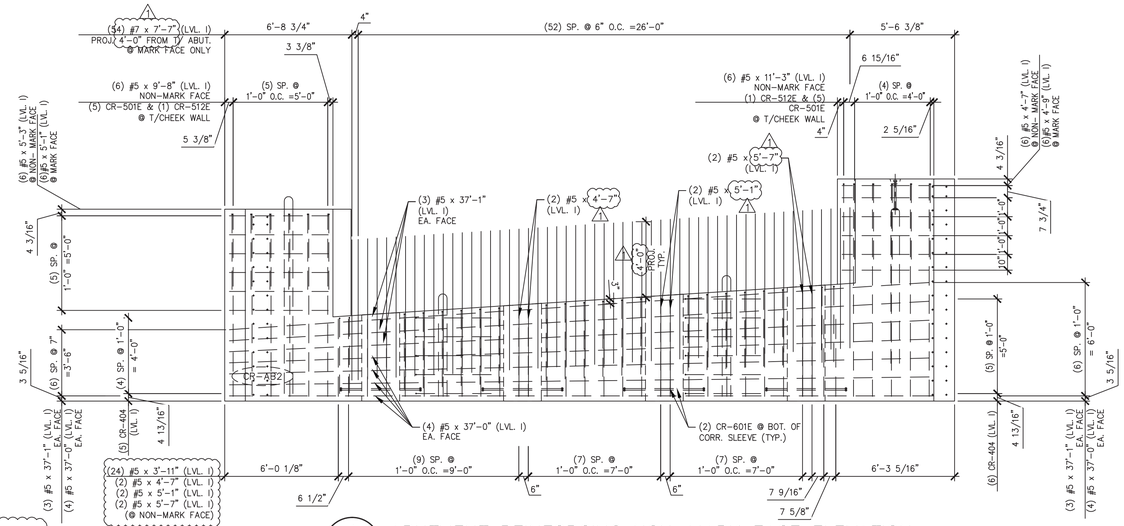

4 AB2 ABUTMENT REINFORCING NON-MARK FACE ELEVATION

(ONLY #7 x 7'-7" (LVL. I) @ MARK FACE PROJECTING BARS SHOWN. ALL OTHER PROJECTING BARS ARE NOT SHOWN HERE FOR CLARITY. SEE DETAILS "2/AB2 & B/AB2.1" FOR ADDITIONAL PROJECTING BARS)

1/4" = 1'-0"

△1 4-18-16 REVISED PER VTRANS COMMENTS

APPROVAL STAMP:

Vermont Agency of Transportation
RECEIVED
CK'D BY JDG/SMC OK'D BY WDL
April 18, 2016
RESUBMIT NO Approved AsNoted
BY RSY DATE 04/26/2016

J.P. CARRARA & SONS INC.
Precast & Prestress Manufacturer
2464 CASE STR., MIDDLEBURY, VERMONT 05753 Phone:(802)388-6361 Fax:(802)388-9010

CCS CONSTRUCTORS, INC
CONTRACTOR
MORRISVILLE, VT

STATE OF VERMONT AGENCY OF TRANSPORTATION
COUNTY OF ORLEANS

TOWN OF CRAFTSBURY
ROUTE NO. TH-4, RURAL MINOR COLLECTOR
BRIDGE NO.: 4 PROJECT NO.: BO 1449(34)

PRECAST ABUTMENT DETAILS "CR-AB2"

DATE:	APR 18, 2016
SCALE:	NOTED
CHKD: R.M.	DFTM: PSS
JOB NO:	23478-015
DWG. NO:	AB2

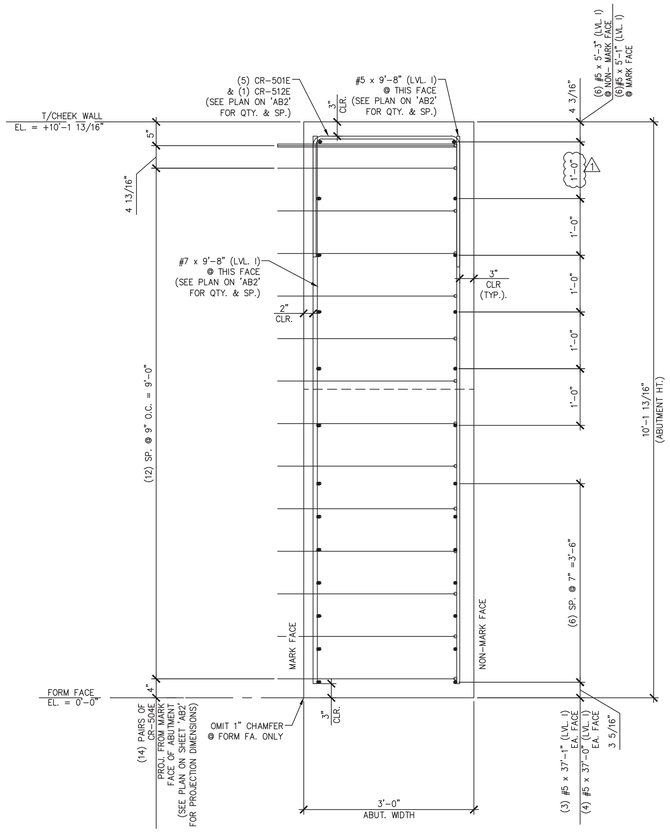

A AB2.1 ABUTMENT SECTION
3/4" = 1'-0"

SHOP NOTE:
ALL EDGES OF ABUTMENT SHALL
RECEIVE A 1" CHAMFER (U.N.O.)

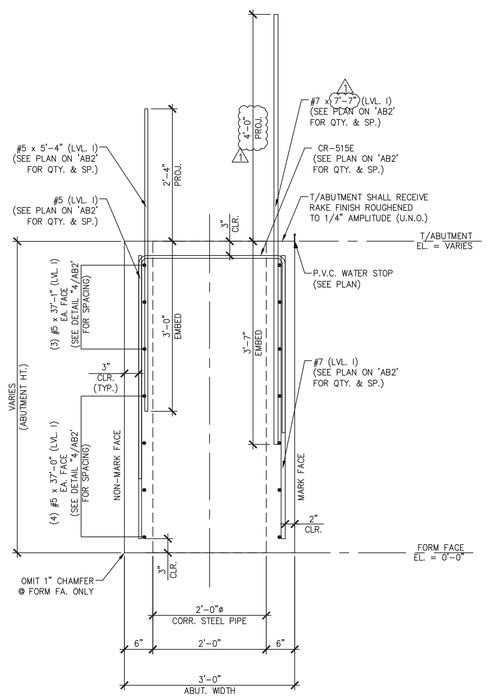

B AB2.1 ABUTMENT SECTION
3/4" = 1'-0"

SHOP NOTE:
ALL EDGES OF ABUTMENT SHALL
RECEIVE A 1" CHAMFER (U.N.O.)

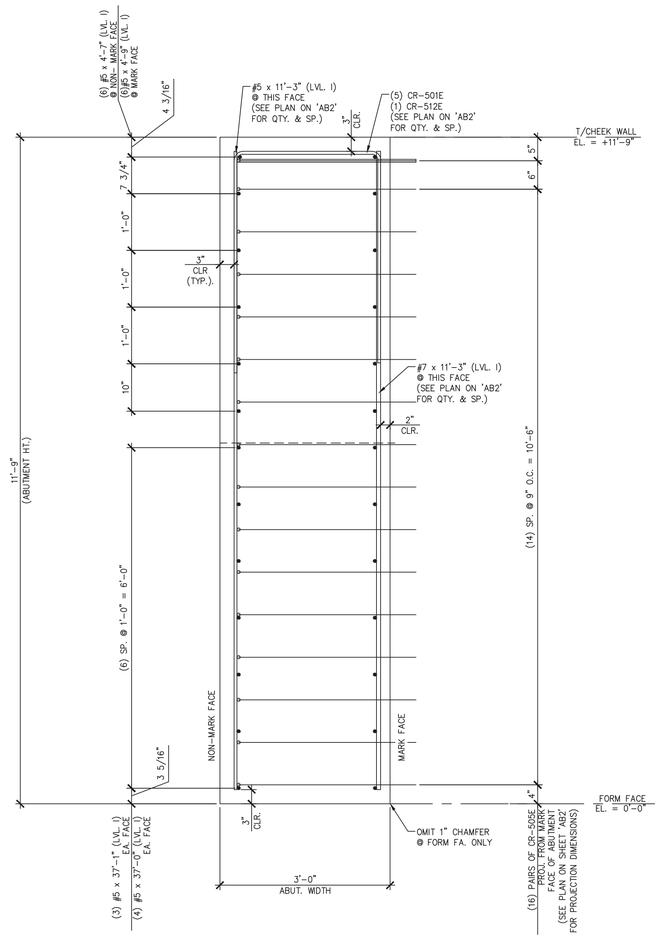

C AB2.1 ABUTMENT SECTION
3/4" = 1'-0"

SHOP NOTE:
ALL EDGES OF ABUTMENT SHALL
RECEIVE A 1" CHAMFER (U.N.O.)

SHOP NOTE:
f'c = 5,000 PSI
f'ci = 5,000 PSI
MIX: #425M-NO DCI

SHOP NOTES:
1. ALL EDGES OF ABUTMENT SHALL RECEIVE A 1" CHAMFER (U.N.O.)

MARK: CR-AB2	QTY.: 1	WT.: 58.50 TONS	VOL.: 28.89 cy

MATERIAL LIST / ABUTMENT

ITEM	MARK	DESCRIPTION	QTY.
1	CR-601E	#6 BENT BAR (LEVEL I, EPOXY COATED)	8
2	CR-501E	#5 BENT BAR (LEVEL I, EPOXY COATED)	10
3	CR-504E	#5 BENT BAR (LEVEL I, EPOXY COATED)	28
4	CR-505E	#5 BENT BAR (LEVEL I, EPOXY COATED)	32
5	CR-512E	#5 BENT BAR (LEVEL I, EPOXY COATED)	6
6	CR-515E	#5 BENT BAR (LEVEL I, EPOXY COATED)	18
7	CR-404E	#4 BENT BAR (LEVEL I, EPOXY COATED)	11
8		#5 x 3'-11" (LEVEL I, EPOXY COATED)	24
9		#5 x 4'-7" (LEVEL I, EPOXY COATED)	8
10		#5 x 4'-9" (LEVEL I, EPOXY COATED)	6
11		#5 x 5'-1" (LEVEL I, EPOXY COATED)	8
12		#5 x 5'-3" (LEVEL I, EPOXY COATED)	6
12		#5 x 5'-4" (LEVEL I, EPOXY COATED)	23
13		#5 x 5'-7" (LEVEL I, EPOXY COATED)	2
14		#5 x 9'-8" (LEVEL I, EPOXY COATED)	6
15		#5 x 11'-3" (LEVEL I, EPOXY COATED)	6
16		#5 x 37'-1" (LEVEL I, EPOXY COATED)	6
17		#5 x 37'-0" (LEVEL I, EPOXY COATED)	8
18		#7 x 3'-11" (LEVEL I, EPOXY COATED)	42
19		#7 x 4'-7" (LEVEL I, EPOXY COATED)	4
20		#7 x 5'-1" (LEVEL I, EPOXY COATED)	4
21		#7 x 5'-7" (LEVEL I, EPOXY COATED)	4
22		#7 x 7'-7" (LEVEL I, EPOXY COATED)	54
23		#7 x 9'-8" (LEVEL I, EPOXY COATED)	11
24		#7 x 11'-3" (LEVEL I, EPOXY COATED)	11
25			
26		2'-0" ø x 4'-8 1/4" CORRUGATED STEEL PIPE (GALV.)	1
27		2'-0" ø x 5'-2 1/16" CORRUGATED STEEL PIPE (GALV.)	1
28		2'-0" ø x 5'-7 7/8" CORRUGATED STEEL PIPE (GALV.)	1
29		2'-0" ø x 6'-1 11/16" CORRUGATED STEEL PIPE (GALV.)	1
30		4" ø x 1'-6" METAL SLEEVES (GALV.)	8
31			
32	MK-CR2	20T x 19 3/4" SWIFT LIFT LIFTER	1
33	MK-CR10	SET OF (4) 1/2"ø X 8'-3" STRANDS FOR SWIFT LIFTS	1
34	MK-CR11	SET OF (4) 0.60"ø X 5'-3 3/16" STRAND LIFTING LOOPS	1
35	MK-CR12	SET OF (4) 0.60"ø X 6'-2 13/16" STRAND LIFTING LOOPS	1
36	MK-CR13	SET OF (4) 0.60"ø X 10'-5" STRAND LIFTING LOOPS	1
37		P.V.C. WATER STOP (SUPPLIED BY OTHERS)	26.5 LF.

4-18-16 REVISED PER VTRANS COMMENTS

APPROVAL STAMP:

Vermont Agency of Transportation
RECEIVED
CK'D BY JDG/SMC OK'D BY WDL
April 18, 2016
RESUBMIT NO Approved AsNoted
BY RSY DATE 04/26/2016

J.P. CARRARA & SONS INC.
Precast & Prestress Manufacturer
2464 CASE STR., MIDDLEBURY, VERMONT 05753 Phone:(802)388-6361 Fax:(802)388-9010

CCS CONSTRUCTORS, INC
CONTRACTOR
MORRISVILLE, VT

STATE OF VERMONT AGENCY OF TRANSPORTATION
COUNTY OF ORLEANS

TOWN OF CRAFTSBURY
ROUTE NO. TH-4, RURAL MINOR COLLECTOR
BRIDGE NO.: 4 PROJECT NO.: BO 1449(34)

PRECAST ABUTMENT DETAILS 'CR-AB2'

DATE: APR 18, 2016
SCALE: NOTED
CHKD: R.M. DFTM: PSS
JOB NO: 23478-015
DWG. NO: AB2.1

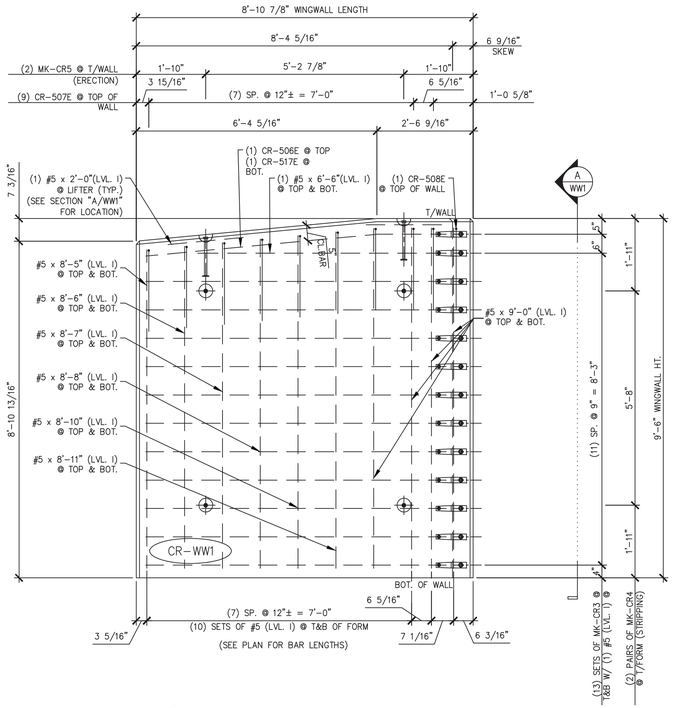

1 WW1 PLAN VIEW IN FORM
1/2" = 1'-0"

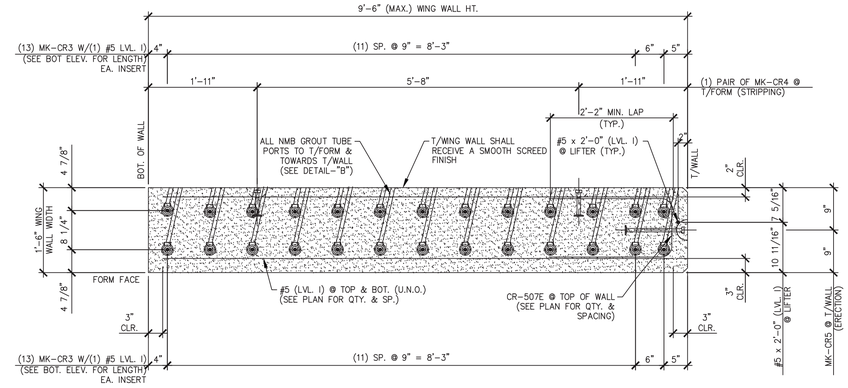

A WW1 WINGWALL SIDE ELEVATION IN FORM
3/4" = 1'-0"

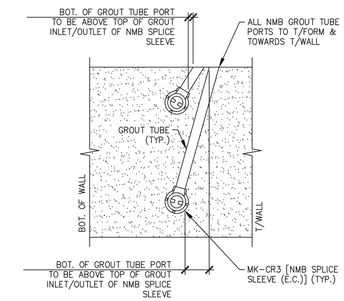

DETAIL - "B"
3/4" = 1'-0"

SHOP NOTES:
1. ALL EDGES OF WING WALLS, FORM FACE & T/WALL FACE, SHALL RECEIVE A 1" CHAMFER (UNLESS NOTED OTHERWISE)

SHOP NOTE:
f'c = 5,000 PSI
f'ci = 3,500 PSI
MIX: #445MSCC

MARK: CR-WW1	QTY.: 1	WT.: 9.0 T	VOL.: 4.45 cy

MATERIAL LIST / WINGWALL

ITEM	MARK	DESCRIPTION	QTY.
1	CR-506E	#5 BENT BAR (LEVEL I, EPOXY COATED)	1
2	CR-507E	#5 BENT BAR (LEVEL I, EPOXY COATED)	9
3	CR-508E	#5 BENT BAR (LEVEL I, EPOXY COATED)	1
4	CR-517E	#5 BENT BAR (LEVEL I, EPOXY COATED)	1
5		#5 x 9'-0" (LEVEL I, EPOXY COATED)	8
6		#5 x 8'-11" (LEVEL I, EPOXY COATED)	2
7		#5 x 8'-10" (LEVEL I, EPOXY COATED)	2
8		#5 x 8'-8" (LEVEL I, EPOXY COATED) 1	2
9		#5 x 8'-7" (LEVEL I, EPOXY COATED)	2
10		#5 x 8'-6" (LEVEL I, EPOXY COATED)	2
11		#5 x 8'-5" (LEVEL I, EPOXY COATED)	2
12		#5 x 8'-0" (LEVEL I, EPOXY COATED)	11
13		#5 x 7'-9" (LEVEL I, EPOXY COATED)	11
14		#5 x 6'-6" (LEVEL I, EPOXY COATED)	2
15		#5 x 2'-0" (LEVEL I, EPOXY COATED)	2
16	MK-CR3	NMB SPLICE SLEEVE 5U-X(PG) (EPOXY COATED)	26
17	MK-CR4	4T x 7 1/8" SWIFT LIFT LIFTER	4
18	MK-CR5	8T x 13 3/8" SWIFT LIFT LIFTER	2

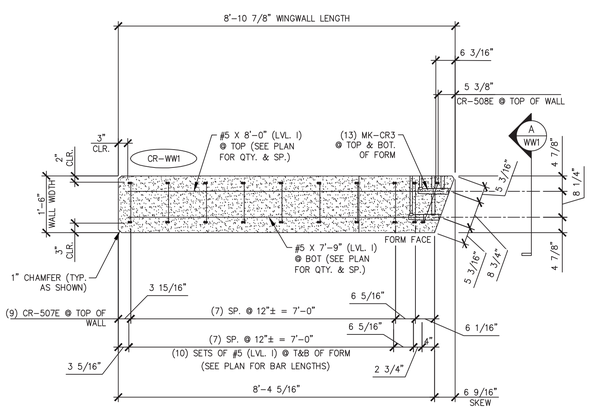

WING WALL BOTTOM ELEVATION
1/2" = 1'-0"

APPROVAL STAMP:

Vermont Agency of Transportation
RECEIVED
CK'D BY JDG/SMC OK'D BY WDL
April 18, 2016
RESUBMIT NO Approved AsNoted
BY RSY DATE 04/26/2016

1 4-18-16 REVISED PER VTRANS COMMENTS

J.P. CARRARA & SONS INC.
Precast & Prestress Manufacturer
2464 CASE STR., MIDDLEBURY, VERMONT 05753 Phone:(802)388-6361 Fax:(802)388-9010

CCS CONSTRUCTORS, INC
CONTRACTOR
MORRISVILLE, VT

STATE OF VERMONT AGENCY OF TRANSPORTATION
COUNTY OF ORLEANS

TOWN OF CRAFTSBURY
ROUTE NO. TH-4, RURAL MINOR COLLECTOR
BRIDGE NO.: 4 PROJECT NO.: BO 1449(34)

PRECAST WINGWALL DETAILS "CR-WW1"

DATE: APR 18, 2016
SCALE: NOTED
CHKD: R.M. DFTM: PSS
JOB NO: 23478-015
DWG. NO: WW1

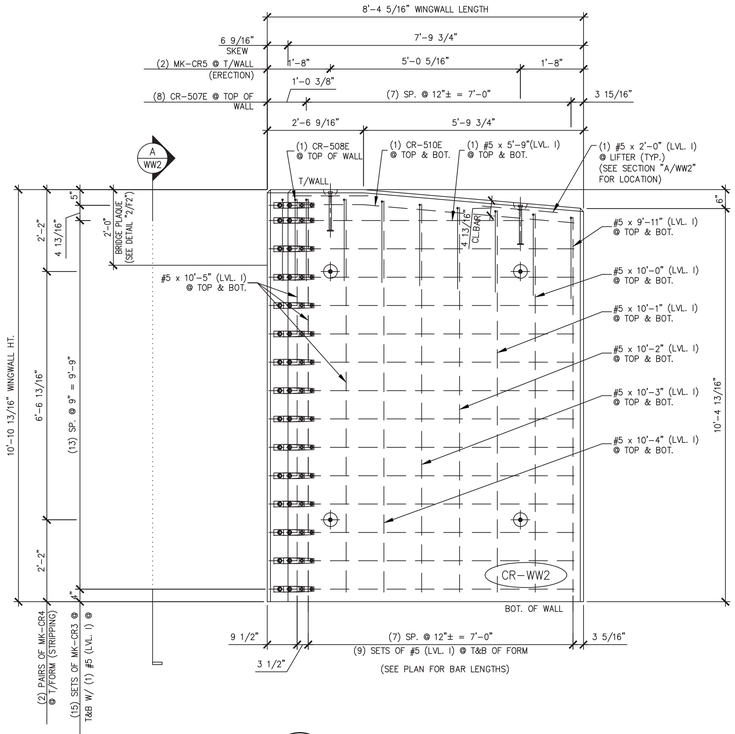

1 WW2 PLAN VIEW IN FORM

1/2" = 1'-0"

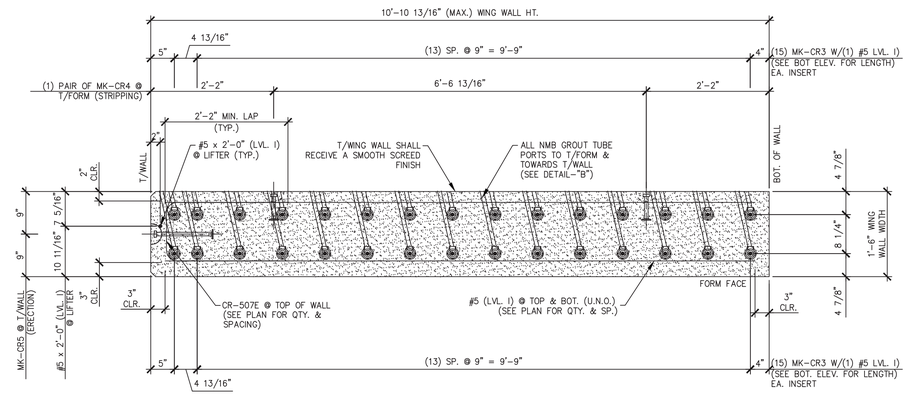

A WW2 WINGWALL SIDE ELEVATION IN FORM

3/4" = 1'-0"

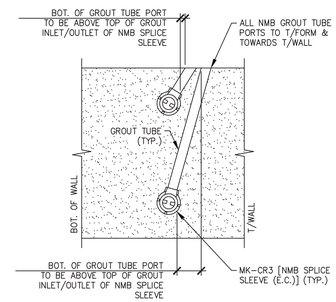

DETAIL – "B"

3/4" = 1'-0"

SHOP NOTES:
1. ALL EDGES OF WING WALLS, FORM FACE & T/WALL FACE, SHALL RECEIVE A 1" CHAMFER (UNLESS NOTED OTHERWISE)

SHOP NOTE:
f'c = 5,000 PSI
f'ci = 3,500 PSI
MIX: #445MSCC

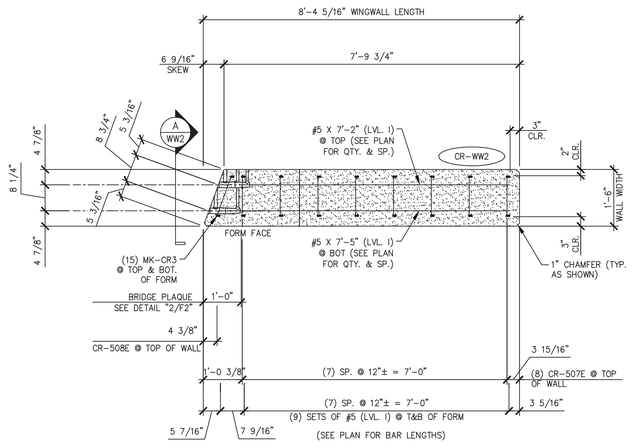

WING WALL BOTTOM ELEVATION

1/2" = 1'-0"

MARK: CR-WW2	QTY.: 1	WT.: 9.75 T	VOL.: 4.82 cy

MATERIAL LIST / WINGWALL

ITEM	MARK	DESCRIPTION	QTY.
1	CR-507E	#5 BENT BAR (LEVEL I, EPOXY COATED)	8
2	CR-508E	#5 BENT BAR (LEVEL I, EPOXY COATED)	1
3	CR-510E	#5 BENT BAR (LEVEL I, EPOXY COATED)	2
4		#5 x 10'-5" (LEVEL I, EPOXY COATED)	6
5		#5 x 10'-4" (LEVEL I, EPOXY COATED)	2
6		#5 x 10'-3" (LEVEL I, EPOXY COATED)	2
7		#5 x 10'-2" (LEVEL I, EPOXY COATED)	2
8		#5 x 10'-1" (LEVEL I, EPOXY COATED) 1	2
9		#5 x 10'-0" (LEVEL I, EPOXY COATED)	2
10		#5 x 9'-11" (LEVEL I, EPOXY COATED)	2
11		#5 x 7'-5" (LEVEL I, EPOXY COATED)	13
12		#5 x 7'-2" (LEVEL I, EPOXY COATED)	13
13		#5 x 5'-9" (LEVEL I, EPOXY COATED)	2
14		#5 x 2'-0" (LEVEL I, EPOXY COATED)	2
15		BRIDGE PLAQUE (SUPPLIED BY OTHERS)	1
16	MK-CR3	NMB SPLICE SLEEVE 5U-X(PG) (EPOXY COATED)	30
17	MK-CR4	4T x 7 1/8" SWIFT LIFT LIFTER	4
18	MK-CR5	8T x 13 3/8" SWIFT LIFT LIFTER	2

1 4-18-16 REVISED PER VTRANS COMMENTS

APPROVAL STAMP:

Vermont Agency of Transportation
RECEIVED
Electronic Engineering Records Not to Be Changed
CK'D BY JDG/SMC OK'D BY WDL
April 18, 2016
RESUBMIT NO Approved AsNoted
BY RSY DATE 04/26/2016

J.P. CARRARA & SONS INC.
Precast & Prestress Manufacturer
2464 CASE STR., MIDDLEBURY, VERMONT 05753 Phone:(802)388-6361 Fax:(802)388-9010

CCS CONSTRUCTORS, INC
CONTRACTOR
MORRISVILLE, VT

STATE OF VERMONT AGENCY OF TRANSPORTATION
COUNTY OF ORLEANS

TOWN OF CRAFTSBURY
ROUTE NO. TH-4, RURAL MINOR COLLECTOR
BRIDGE NO.: 4 PROJECT NO.: BO 1449(34)

PRECAST WINGWALL DETAILS "CR-WW2"

DATE: APR 18, 2016
SCALE: NOTED
CHKD: R.M. DFTM: PSS
JOB NO: 23478-015
DWG. NO: WW2

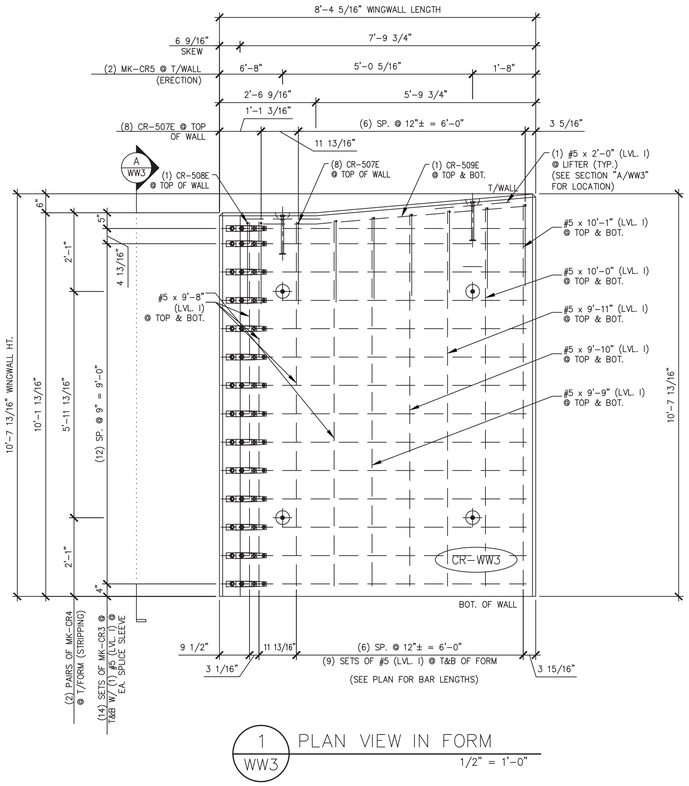

1 / WW3 PLAN VIEW IN FORM
1/2" = 1'-0"

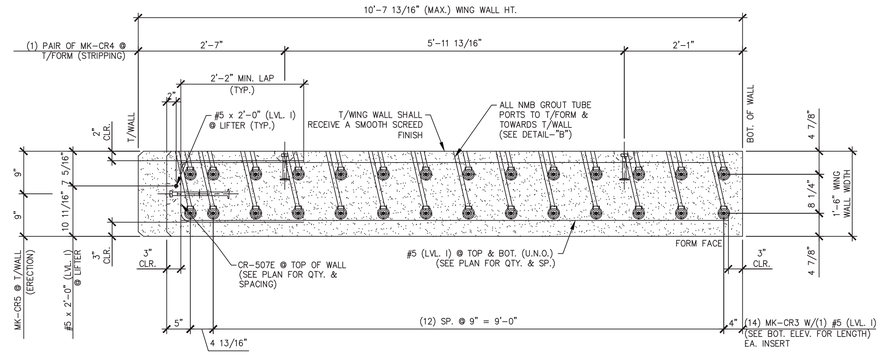

A / WW3 WINGWALL SIDE ELEVATION IN FORM
3/4" = 1'-0"

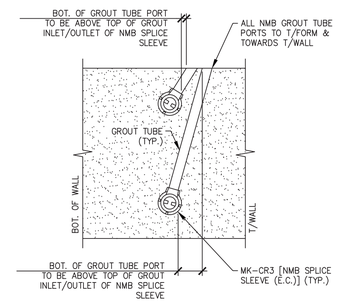

DETAIL - "B"
3/4" = 1'-0"

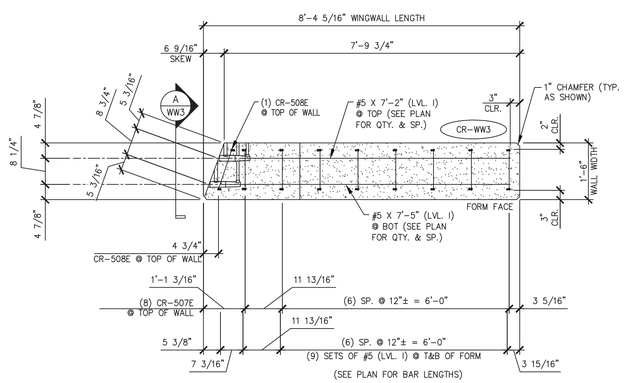

WING WALL BOTTOM ELEVATION
1/2" = 1'-0"

SHOP NOTES:
1. ALL EDGES OF WING WALLS, FORM FACE & T/WALL FACE, SHALL RECEIVE A 1" CHAMFER (UNLESS NOTED OTHERWISE)

SHOP NOTE:
f'c = 5,000 PSI
f'ci = 3,500 PSI
MIX: #445MSCC

MARK: CR-WW3	QTY.: 1	WT.: 9.40 T	VOL.: 4.65 C.Y.

MATERIAL LIST / WINGWALL

ITEM	MARK	DESCRIPTION	QTY.
1	CR-507E	#5 BENT BAR (LEVEL I, EPOXY COATED)	8
2	CR-508E	#5 BENT BAR (LEVEL I, EPOXY COATED)	1
3	CR-509E	#5 BENT BAR (LEVEL I, EPOXY COATED)	2
4		#5 x 10'-1" (LEVEL I, EPOXY COATED)	2
5		#5 x 10'-0" (LEVEL I, EPOXY COATED)	2
6		#5 x 9'-11" (LEVEL I, EPOXY COATED)	2
7		#5 x 9'-10" (LEVEL I, EPOXY COATED)	2
8		#5 x 9'-9" (LEVEL I, EPOXY COATED) △1	2
9		#5 x 9'-8" (LEVEL I, EPOXY COATED)	8
10		#5 x 7'-2" (LEVEL I, EPOXY COATED)	14
11		#5 x 7'-5" (LEVEL I, EPOXY COATED)	14
12		#5 x 2'-0" (LEVEL I, EPOXY COATED)	2
13	MK-CR3	NMB SPLICE SLEEVE 5U-X(PG) (EPOXY COATED)	28
14	MK-CR4	4T x 7 1/8" SWIFT LIFT LIFTER	4
15	MK-CR5	8T x 13 3/8" SWIFT LIFT LIFTER	2
16			

△1 4-18-16 REVISED PER VTRANS COMMENTS

APPROVAL STAMP:

Vermont Agency of Transportation
RECEIVED
CK'D BY JDG/SMC OK'D BY WDL
April 18, 2016
RESUBMIT NO Approved AsNoted
BY RSY DATE 04/26/2016

J.P. CARRARA & SONS INC.
Precast & Prestress Manufacturer
2464 CASE STR., MIDDLEBURY, VERMONT 05753 Phone:(802)388-6361 Fax:(802)388-9010

CCS CONSTRUCTORS, INC
CONTRACTOR
MORRISVILLE, VT

STATE OF VERMONT AGENCY OF TRANSPORTATION
COUNTY OF ORLEANS

TOWN OF CRAFTSBURY
ROUTE NO. TH-4, RURAL MINOR COLLECTOR
BRIDGE NO.: 4 PROJECT NO.: BO 1449(34)

PRECAST WINGWALL DETAILS "CR-WW3"

DATE: APR 18, 2016
SCALE: NOTED
CHKD: R.M. DFTM: PSS
JOB NO: 23478-015
DWG. NO: WW3

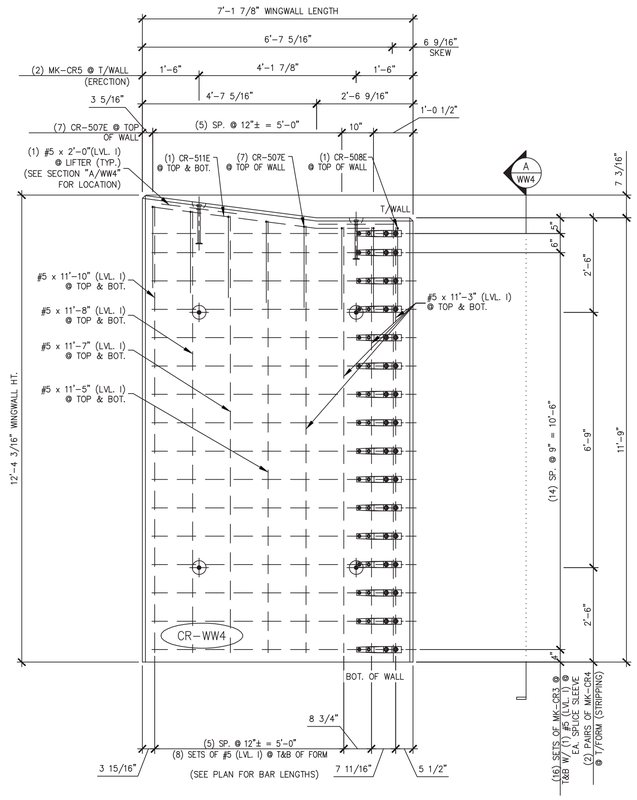

1 WW4 PLAN VIEW IN FORM

1/2" = 1'-0"

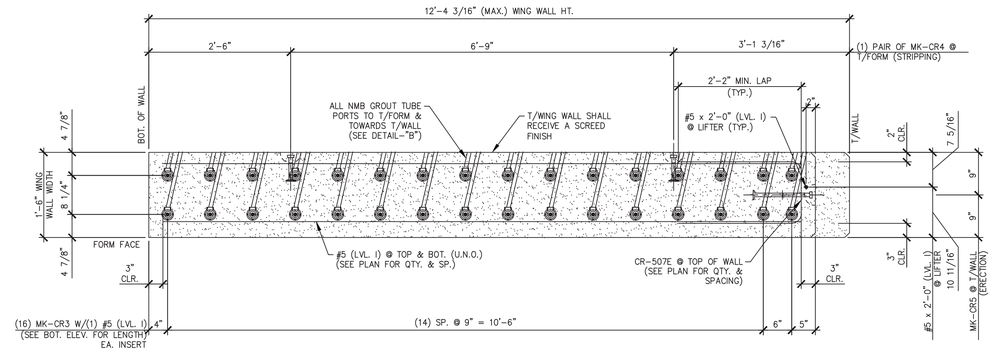

A WW4 WINGWALL SIDE ELEVATION IN FORM

3/4" = 1'-0"

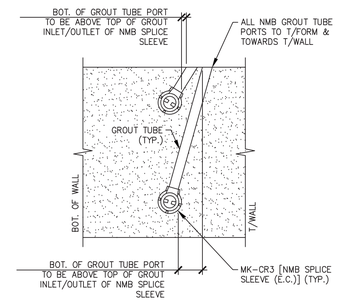

DETAIL – "B"

3/4" = 1'-0"

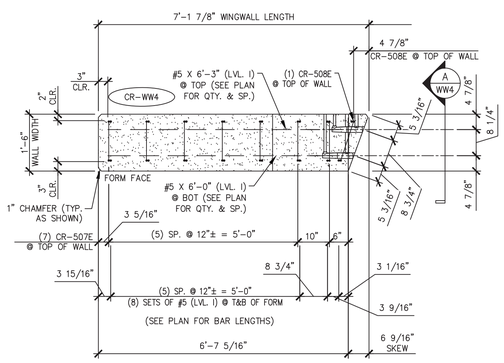

WING WALL BOTTOM ELEVATION

1/2" = 1'-0"

SHOP NOTES:
1. ALL EDGES OF WING WALLS, FORM FACE & T/WALL FACE, SHALL RECEIVE A 1" CHAMFER (UNLESS NOTED OTHERWISE)

SHOP NOTE:
f'c = 5,000 PSI
f'ci = 3,500 PSI
MIX: #445MSCC

MARK: CR-WW4	QTY.: 1	WT.: 9.25 T	VOL.: 4.57 C.Y.

MATERIAL LIST / WINGWALL

ITEM	MARK	DESCRIPTION	QTY.
1	CR-507E	#5 BENT BAR (LEVEL I, EPOXY COATED)	7
2	CR-508E	#5 BENT BAR (LEVEL I, EPOXY COATED)	1
3	CR-511E	#5 BENT BAR (LEVEL I, EPOXY COATED)	2
4		#5 x 11'-10" (LEVEL I, EPOXY COATED)	2
5		#5 x 11'-8" (LEVEL I, EPOXY COATED)	2
6		#5 x 11'-7" (LEVEL I, EPOXY COATED)	2
7		#5 x 11'-5" (LEVEL I, EPOXY COATED) △1	2
8		#5 x 11'-3" (LEVEL I, EPOXY COATED)	8
9		#5 x 6'-3" (LEVEL I, EPOXY COATED)	16
10		#5 x 6'-0" (LEVEL I, EPOXY COATED)	16
11		#5 x 2'-0" (LEVEL I, EPOXY COATED)	2
12	MK-CR3	NMB SPLICE SLEEVE 5U-X(PG) (EPOXY COATED)	32
13	MK-CR4	4T x 7 1/8" SWIFT LIFT LIFTER	4
14	MK-CR5	8T x 13 3/8" SWIFT LIFT LIFTER	2
15			

△1 4-18-16 REVISED PER VTRANS COMMENTS

APPROVAL STAMP:

Vermont Agency of Transportation
RECEIVED
CK'D BY JDG/SMC OK'D BY WDL
April 18, 2016
RESUBMIT BY NO RSY
Approved AsNoted
DATE 04/26/2016

J.P. CARRARA & SONS INC.
Precast & Prestress Manufacturer
2464 CASE STR., MIDDLEBURY, VERMONT 05753 Phone:(802)388-6361 Fax:(802)388-9010

CCS CONSTRUCTORS, INC
CONTRACTOR
MORRISVILLE, VT

STATE OF VERMONT AGENCY OF TRANSPORTATION
COUNTY OF ORLEANS

TOWN OF CRAFTSBURY
ROUTE NO. TH-4, RURAL MINOR COLLECTOR
BRIDGE NO.: 4 PROJECT NO.: BO 1449(34)

PRECAST WINGWALL DETAILS "CR-WW4"

DATE:	APR 18, 2016
SCALE:	NOTED
CHKD: R.M.	DFTM: PSS
JOB NO:	23478-015
DWG. NO:	WW4

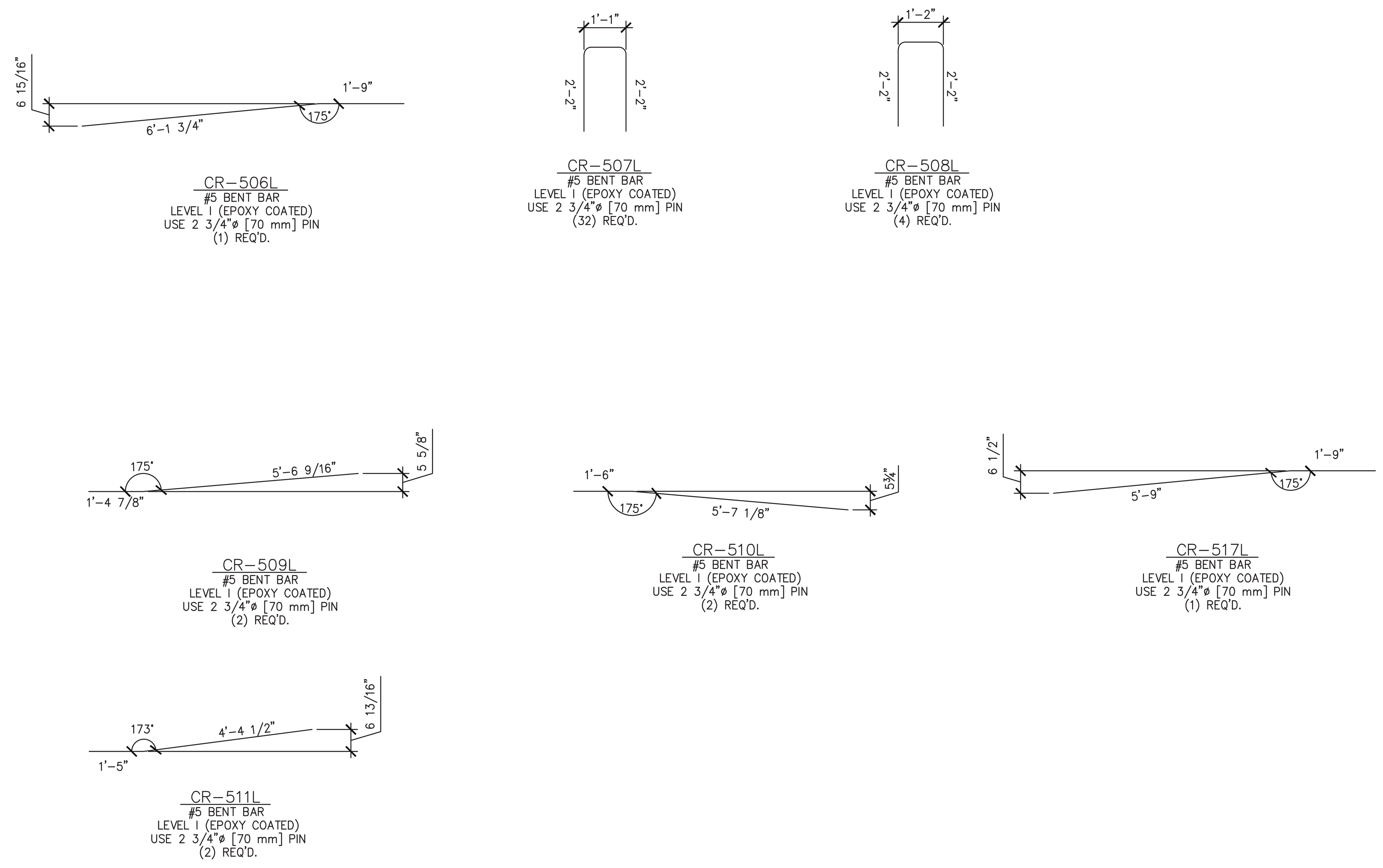

PRECAST WINGWALLS

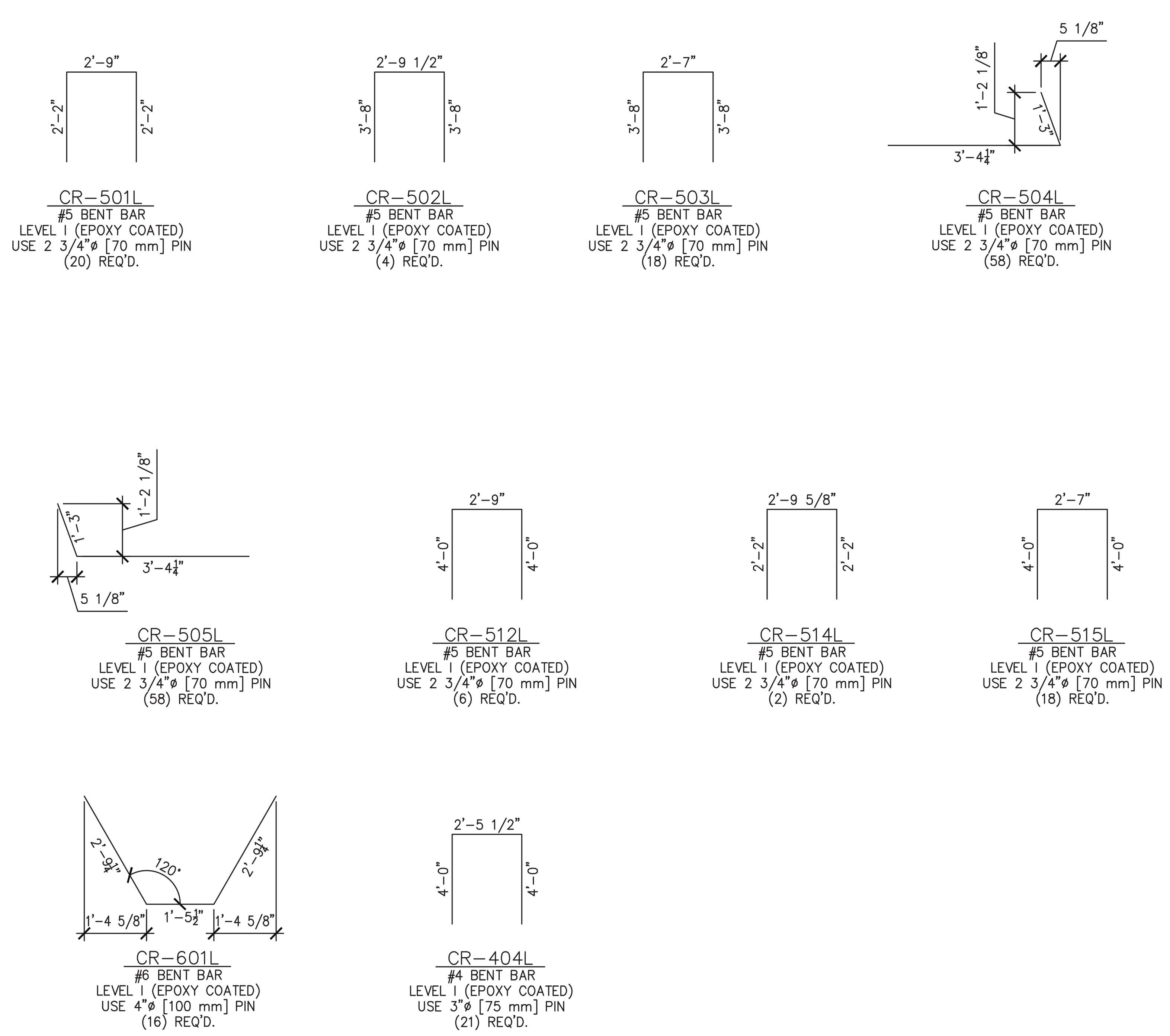

PRECAST ABUTMENTS

WINGWALLS MISCELLANEOUS MATERIALS

ITEM	MARK	QTY.	DESCTIPTION	REMARKS
1		8	#5 x 2'-0" (LEVEL I, EPOXY COATED) ⚠1	
2		2	#5 x 5'-9" (LEVEL I, EPOXY COATED)	
3		16	#5 x 6'-3" (LEVEL I, EPOXY COATED)	
4		17	#5 x 6'-0" (LEVEL I, EPOXY COATED)	INCLUDES (1) ADDITIONAL SAMPLE
5		2	#5 x 6'-6" (LEVEL I, EPOXY COATED)	
6		27	#5 x 7'-2" (LEVEL I, EPOXY COATED)	
7		27	#5 x 7'-5" (LEVEL I, EPOXY COATED)	
8		11	#5 x 7'-9" (LEVEL I, EPOXY COATED)	
9		11	#5 x 8'-0" (LEVEL I, EPOXY COATED)	
10		2	#5 x 8'-5" (LEVEL I, EPOXY COATED)	
11		2	#5 x 8'-6" (LEVEL I, EPOXY COATED)	
12		2	#5 x 8'-7" (LEVEL I, EPOXY COATED)	
13		2	#5 x 8'-8" (LEVEL I, EPOXY COATED)	
14		2	#5 x 8'-10" (LEVEL I, EPOXY COATED)	
15		2	#5 x 8'-11" (LEVEL I, EPOXY COATED)	
16		8	#5 x 9'-0" (LEVEL I, EPOXY COATED)	
17		8	#5 x 9'-8" (LEVEL I, EPOXY COATED)	
18		2	#5 x 9'-9" (LEVEL I, EPOXY COATED)	
19		2	#5 x 9'-10" (LEVEL I, EPOXY COATED)	
20		4	#5 x 9'-11" (LEVEL I, EPOXY COATED)	
21		4	#5 x 10'-0" (LEVEL I, EPOXY COATED)	
22		4	#5 x 10'-1" (LEVEL I, EPOXY COATED)	
23		2	#5 x 10'-2" (LEVEL I, EPOXY COATED)	
24		2	#5 x 10'-3" (LEVEL I, EPOXY COATED)	
25		2	#5 x 10'-4" (LEVEL I, EPOXY COATED)	
26		6	#5 x 10'-5" (LEVEL I, EPOXY COATED)	
27		8	#5 x 11'-3" (LEVEL I, EPOXY COATED)	
28		2	#5 x 11'-5" (LEVEL I, EPOXY COATED)	
29		2	#5 x 11'-7" (LEVEL I, EPOXY COATED)	
30		2	#5 x 11'-8" (LEVEL I, EPOXY COATED)	
31		2	#5 x 11'-10" (LEVEL I, EPOXY COATED)	
32				
33	MK-CR3	119	NMB SPLICE SLEEVE 5U-X(PG) (EPOXY COATED)	INCLUDES (3) ADDITIONAL SAMPLES
34	MK-CR4	16	4T x 7 1/8" SWIFT LIFT LIFTER	
35	MK-CR5	8	8T x 13 3/8" SWIFT LIFT LIFTER	
36				

ABUTMENT MISCELLANEOUS MATERIALS

ITEM	MARK	QTY.	DESCTIPTION	REMARKS
1		43	#7 x 3'-3" (LEVEL I, EPOXY COATED) ⚠1	
2		4	#7 x 3'-9" (LEVEL I, EPOXY COATED)	
3		42	#7 x 3'-11" (LEVEL I, EPOXY COATED)	
4		4	#7 x 4'-2" (LEVEL I, EPOXY COATED)	
5		9	#7 x 4'-7" (LEVEL I, EPOXY COATED)	
6		4	#7 x 5'-1" (LEVEL I, EPOXY COATED)	
7		4	#7 x 5'-7" (LEVEL I, EPOXY COATED)	
8		111	#7 x 7'-7" (LEVEL I, EPOXY COATED)	INCLUDES (1) ADDITIONAL SAMPLE
9		11	#7 x 9'-0" (LEVEL I, EPOXY COATED)	
10		11	#7 x 9'-8" (LEVEL I, EPOXY COATED)	
11		11	#7 x 10'-5" (LEVEL I, EPOXY COATED)	
12		11	#7 x 11'-3" (LEVEL I, EPOXY COATED)	
13				
14		24	#5 x 3'-3" (LEVEL I, EPOXY COATED)	
15		2	#5 x 3'-9" (LEVEL I, EPOXY COATED)	
16		24	#5 x 3'-11" (LEVEL I, EPOXY COATED)	
17		2	#5 x 4'-2" (LEVEL I, EPOXY COATED)	
18		11	#5 x 4'-7" (LEVEL I, EPOXY COATED)	
19		6	#5 x 4'-8" (LEVEL I, EPOXY COATED)	
20		12	#5 x 4'-9" (LEVEL I, EPOXY COATED)	
21		6	#5 x 4'-10" (LEVEL I, EPOXY COATED)	
22		6	#5 x 5'-0" (LEVEL I, EPOXY COATED)	
23		8	#5 x 5'-1" (LEVEL I, EPOXY COATED)	
24		6	#5 x 5'-3" (LEVEL I, EPOXY COATED)	
25		44	#5 x 5'-4" (LEVEL I, EPOXY COATED)	
26		2	#5 x 5'-7" (LEVEL I, EPOXY COATED)	
27		6	#5 x 9'-0" (LEVEL I, EPOXY COATED)	
28		6	#5 x 9'-8" (LEVEL I, EPOXY COATED)	
29		6	#5 x 10'-5" (LEVEL I, EPOXY COATED)	
30		6	#5 x 11'-3" (LEVEL I, EPOXY COATED)	
31		8	#5 x 37'-0" (LEVEL I, EPOXY COATED)	
32		6	#5 x 37'-1" (LEVEL I, EPOXY COATED)	
33		6	#5 x 37'-9" (LEVEL I, EPOXY COATED)	
34		6	#5 x 37'-10" (LEVEL I, EPOXY COATED)	
35				
36			⚠1	
37		1	2'-0" ø x 3'-11 3/16" CORRUGATED STEEL PIPE (GALV.)	
38		1	2'-0" ø x 4'-4 1/16" CORRUGATED STEEL PIPE (GALV.)	
39		1	2'-0" ø x 4'-8 1/4" CORRUGATED STEEL PIPE (GALV.)	
40		1	2'-0" ø x 4'-8 15/16" CORRUGATED STEEL PIPE (GALV.)	
41		1	2'-0" ø x 5'-1 13/16" CORRUGATED STEEL PIPE (GALV.)	
42		1	2'-0" ø x 5'-2 1/16" CORRUGATED STEEL PIPE (GALV.)	
43		1	2'-0" ø x 5'-7 7/8" CORRUGATED STEEL PIPE (GALV.)	
44		1	2'-0" ø x 6'-1 11/16" CORRUGATED STEEL PIPE (GALV.)	
45		16	4" ø x 1'-6" METAL SLEEVES (GALV.)	
46				
47	MK-CR2	1	20T x 19 3/4" SWIFT LIFT LIFTER	
48	MK-CR10	1	SET OF (4) 1/2"ø X 8'-3" STRANDS FOR SWIFT LIFTS	
49	MK-CR6	1	SET OF (4) 0.60"ø X 4'-6 1/2" STRAND LIFTING LOOPS	
49	MK-CR7	1	SET OF (4) 0.60"ø X 5'-4 1/4" STRAND LIFTING LOOPS	
49	MK-CR8	1	SET OF (4) 0.60"ø X 9'-10" STRAND LIFTING LOOPS	
49	MK-CR9	1	SET OF (4) 0.60"ø X 11'-2" STRAND LIFTING LOOPS	
49	MK-CR11	1	SET OF (4) 0.60"ø X 5'-3 3/16" STRAND LIFTING LOOPS	
49	MK-CR12	1	SET OF (4) 0.60"ø X 6'-2 13/16" STRAND LIFTING LOOPS	
49	MK-CR13	1	SET OF (4) 0.60"ø X 10'-5" STRAND LIFTING LOOPS	
50				
51		54.2 LF.	P.V.C. WATER STOP	(SUPPLIED BY OTHERS)
52				

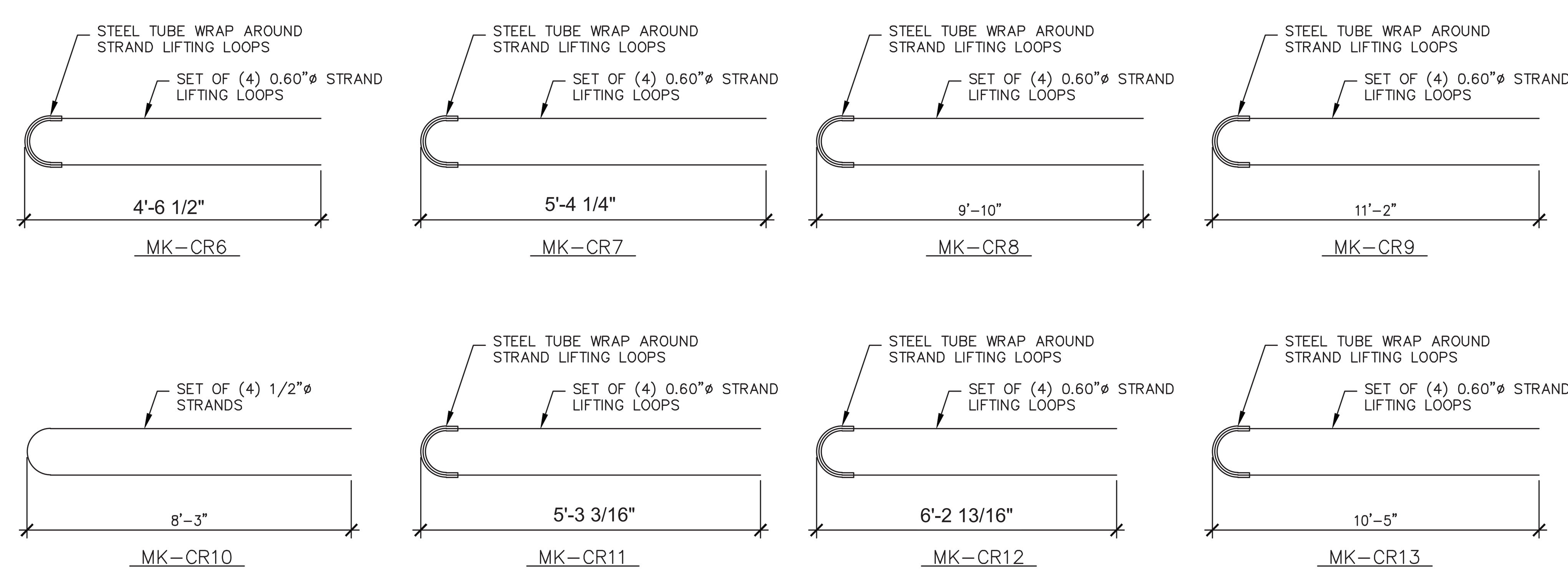

⚠1 4-18-16 REVISED PER VTRANS COMMENTS

APPROVAL STAMP:

Vermont Agency of Transportation
RECEIVED
CK'D BY JDG/SMC OK'D BY WDL
April 18, 2016
RESUBMIT NO Approved AsNoted
BY RSY DATE 04/26/2016

J.P. CARRARA & SONS INC.
Precast & Prestress Manufacturer
2464 CASE STR., MIDDLEBURY, VERMONT 05753 Phone:(802)388-6361 Fax:(802)388-9010

CCS CONSTRUCTORS, INC
CONTRACTOR
MORRISVILLE, VT

STATE OF VERMONT AGENCY OF TRANSPORTATION
COUNTY OF ORLEANS

TOWN OF CRAFTSBURY
ROUTE NO. TH-4, RURAL MINOR COLLECTOR
BRIDGE NO.: 4 PROJECT NO.: BO 1449(34)

MATERIALS LIST
(ABUTMENTS & WING WALLS)

DATE:	APR 18, 2016
SCALE:	NOTED
CHKD: R.M.	DFTM: PSS
JOB NO:	23478-015
DWG. NO:	M1

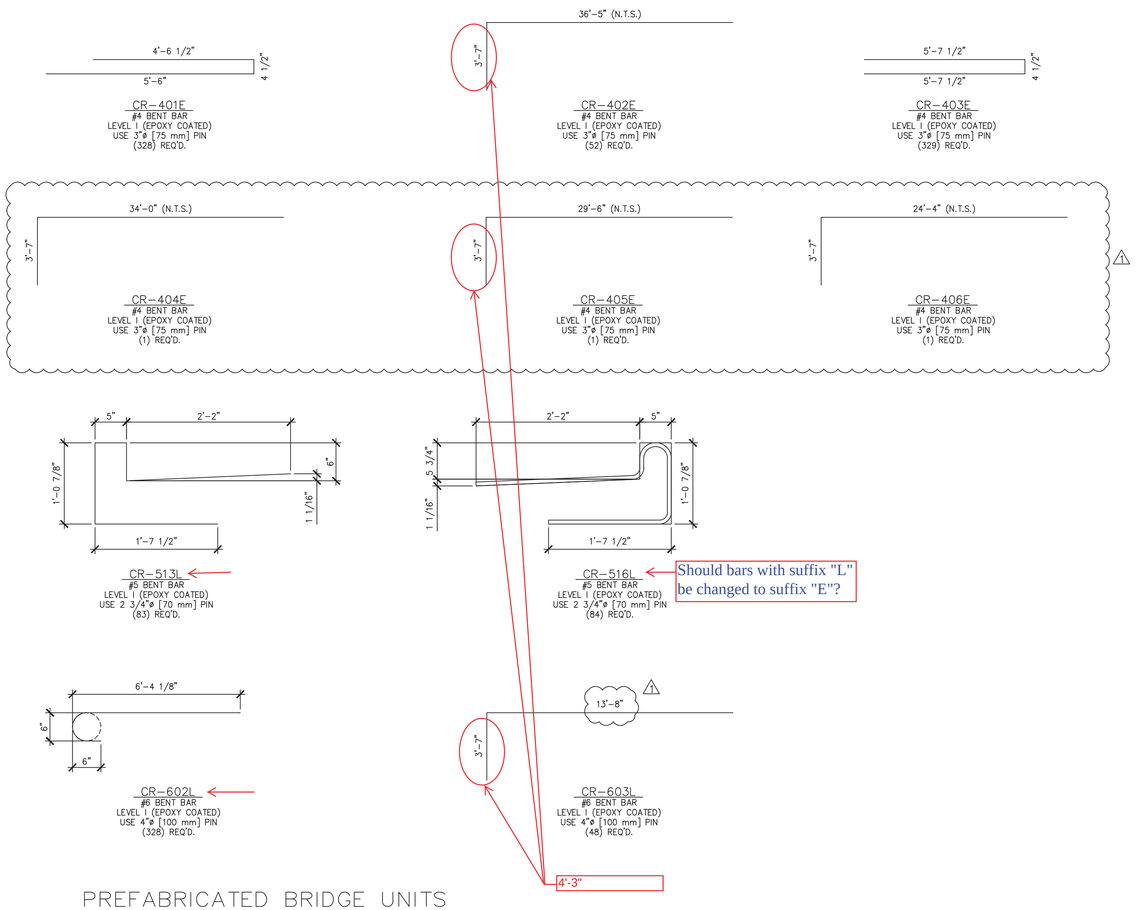

PREFABRICATED BRIDGE UNITS

PREFABRICATED BRIDGE UNITS MISCELLANEOUS MATERIALS

ITEM	MARK	QTY.	DESCTIPTION	REMARKS
1	1	26	#4 x 87'-3" (W/ (2) 2'-2" STAGGERED LAP) (40' + 20' + 32'-3") (LVL. I, EPOXY COATED)	
2		1	#4 x 33'-11" (LEVEL I, EPOXY COATED)	
3		1	#4 x 29'-5" (LEVEL I, EPOXY COATED)	
4		1	#4 x 24'-3" (LEVEL I, EPOXY COATED)	
5		2	#4 x 22'-6" (LEVEL I, EPOXY COATED)	
6		26	#4 x 19'-7" (LEVEL I, EPOXY COATED)	
7		164	#4 x 7'-0" (LEVEL I, EPOXY COATED)	
8		165	#4 x 6'-8" (LEVEL I, EPOXY COATED)	INCLUDES (1) ADDITIONAL SAMPLE
9				
10		4	#5 x 40'-0" (LEVEL I, EPOXY COATED)	
11		4	#5 x 23'-4" (LEVEL I, EPOXY COATED)	
12		4	#5 x 23'-3" (LEVEL I, EPOXY COATED)	
13		164	#5 x 7'-11" (LEVEL I, EPOXY COATED)	
14		164	#5 x 7'-9" (LEVEL I, EPOXY COATED)	
15		95	#5 x 4'-7" (LEVEL I, EPOXY COATED)	
16		54	#5 x 4'-4" (LEVEL I, EPOXY COATED)	
17		34	#5 x 4'-3" (LEVEL I, EPOXY COATED)	
18		24	#5 x 4'-0" (LEVEL I, EPOXY COATED)	
19		49	#5 x 3'-11" (LEVEL I, EPOXY COATED)	
20		15	#5 x 3'-9" (LEVEL I, EPOXY COATED)	
21		1	#6 X 6'-0" (LEVEL I, EPOXY COATED)	FOR SAMPLE
22		112	1 1/4"ø x 1'-9 3/4" GUARD RAIL BOLTS (GALV.) (ASTM A 449)	
23				
24		12	LIFTING LUG (1 1/4" ASTM A572 GRADE 50 PLATE)	
25				
26				
27				
28				
29				
30				
31				
32				
33				
34				
35				
36				
37				
38				

1 4-18-16 REVISED PER VTRANS COMMENTS

APPROVAL STAMP:

Vermont Agency of Transportation
RECEIVED
Division of Bridge Project Mgt. Office of BDE, Jeremy Hill

CK'D BY JDG/SMC OK'D BY WDL

April 18, 2016

RESUBMIT NO Approved AsNoted
BY RSY DATE 04/26/2016

J.P. CARRARA & SONS INC.
Precast & Prestress Manufacturer
2464 CASE STR., MIDDLEBURY, VERMONT 05753 Phone:(802)388-6361 Fax:(802)388-9010

CCS CONSTRUCTORS, INC
CONTRACTOR
MORRISVILLE, VT

STATE OF VERMONT AGENCY OF TRANSPORTATION
COUNTY OF ORLEANS

DATE: APR 18, 2016
SCALE: NOTED

TOWN OF CRAFTSBURY
ROUTE NO. TH-4, RURAL MINOR COLLECTOR
BRIDGE NO.: 4 PROJECT NO.: BO 1449(34)

CHKD: R.M. DFTM: PSS
JOB NO: 23478-015

MATERIALS LIST
(PREFABRICATED BRIDGE UNITS)

DWG. NO: M2