APR. 2016

CALDERWOOD ENGINEERING
222 RIVER ROAD
RICHMOND, ME 04357
PH. (207) 737-2007 FAX (207) 737-2008

PADEYES/LIFTING LUGS

STATE OF VERMONT
ERIC T. CALDERWOOD
NO. 8777
Structural
LICENSED
PROFESSIONAL ENGINEER

CALDERWOOD ENGINEERING, ETC.

STRUCTURAL ENGINEERING • DETAILING SERVICES

222 RIVER RD, RICHMOND, ME PH/FX (207)737-2007/(207) 737-2008

PREPARED FOR:

JP CARRARA & SONS, INC

020-16/01-cs-Craftsbury
Craftsbury, Vt

Vermont Agency of Transportation
RECEIVED
ON: April 18, 2016
and Checked for
CONFORMANCE
BY: SMC/JDG/WDL DATE: 04/26/2016

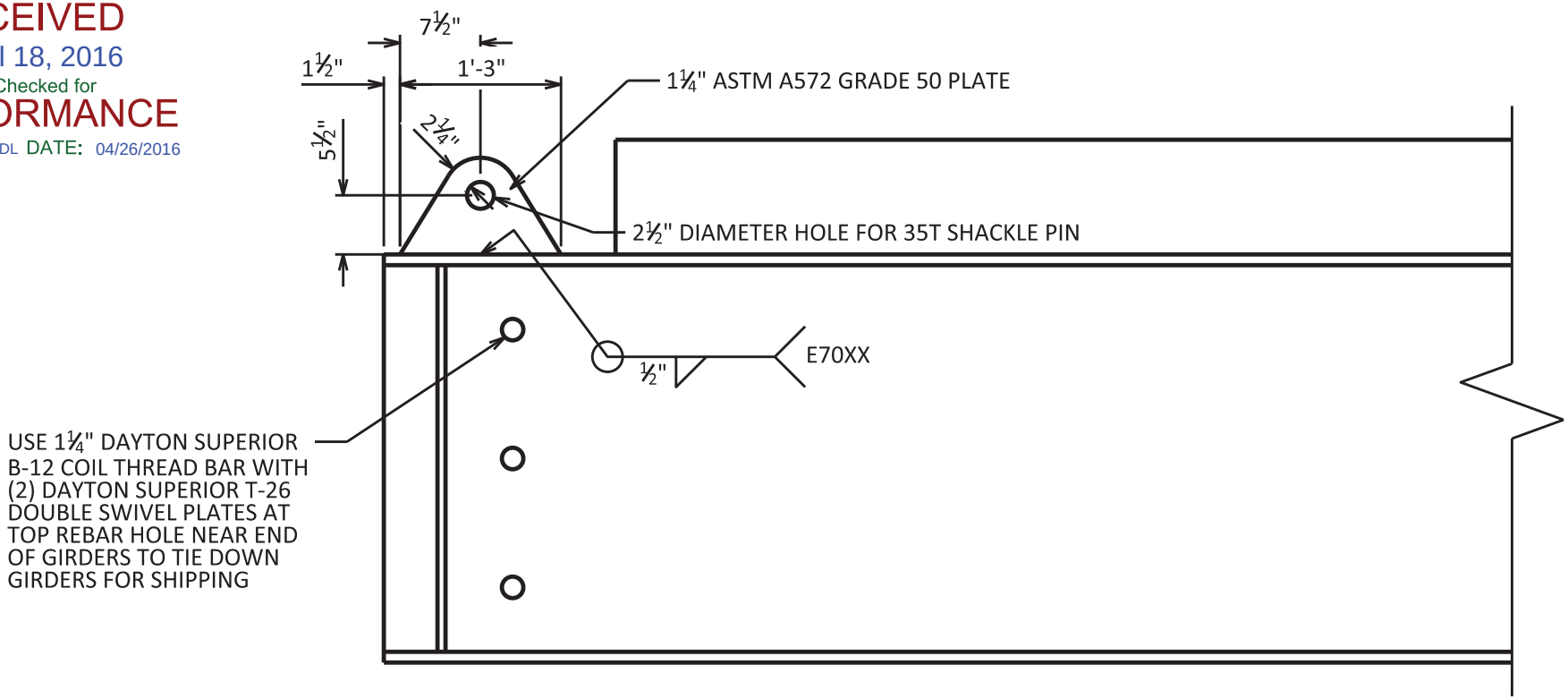

LIFTING LUG/PADEYE DETAIL TYPICAL EACH END OF EACH GIRDER

CALDERWOOD ENGINEERING
222 RIVER ROAD
RICHMOND, ME 04357
PH. (207) 737-2007 FAX (207) 737-2008

Vermont Agency of Transportation
RECEIVED
ON: April 18, 2016
and Checked for
CONFORMANCE
BY: SMC/JDG/WDL DATE: 04/26/2016

Project: Craftsbury, Vt - Lifting and shipping Calculations for PBU's
Contractor: CCS Constructors
Client: JP Carrara & Sons
Engineering Design: Calderwood Engineering
Design Computations by: Eric T. Calderwood, PE

Project Notes:
Calculation of Centroid

Girders are straight - bridge is curved, radius is applied to bridge by varying the overhang, worst case condition will be assumed with the maximum overhang calculated for weight purposes, but the minimum overhange calculated for composite properties, and action

$t_{deck} := 8.5\ in$

$t_{deckOH} := 1\ ft + 4\ in = 1.33\ ft$ for fascias only on PBU 1 & 3

$\gamma_c := 150\ pcf$ $Curb_{Width} := 11\ in$ *Concrete Shear key/ pavement backer width*

$\gamma_{stl} := 490\ pcf$ $Curb_{Height} := 2.875\ in$ *Concrete Shear key/ pavement backer height*

CALDERWOOD ENGINEERING
222 RIVER ROAD
RICHMOND, ME 04357
PH. (207) 737-2007 FAX (207) 737-2008

Vermont Agency of Transportation
RECEIVED
ON: April 18, 2016
and Checked for
CONFORMANCE
BY: SMC/JDG/WDL DATE: 04/26/2016

Girder Properties:

Beam geometry/ Area/ weight

$b_{bf} := 16.0\ in$

$t_{bf} := 1\ in \qquad A_{bf} := b_{bf} \cdot t_{bf} = 16\ in^2$

$d_w := 36\ in$

$t_w := 0.625\ in \qquad A_w := d_w \cdot t_w = 22.5\ in^2$

$b_{tf} := 16.0\ in$

$t_{tf} := 1\ in \qquad A_{tf} := b_{tf} \cdot t_{tf} = 16\ in^2$

$d_{beam} := t_{tf} + d_w + t_{bf} = 38\ in$

$A_g := b_{tf} \cdot t_{tf} + b_{bf} \cdot t_{bf} + d_w \cdot t_w = 54.5\ in^2$

$W_{stl} := A_g \cdot \gamma_{stl} \cdot 115\% \cdot 85.8612\ ft = 18311.54\ lbf$

CALDERWOOD ENGINEERING
222 RIVER ROAD
RICHMOND, ME 04357
PH. (207) 737-2007 FAX (207) 737-2008

Vermont Agency of Transportation
RECEIVED
ON: April 18, 2016
and Checked for
CONFORMANCE
BY: SMC/JDG/WDL DATE: 04/26/2016

Centroid of PBU #1 (left Fascia) - x & y dimensions are measured from the lower left hand obtuse corner of the precast decking (abutment #1 end, Easterly side)

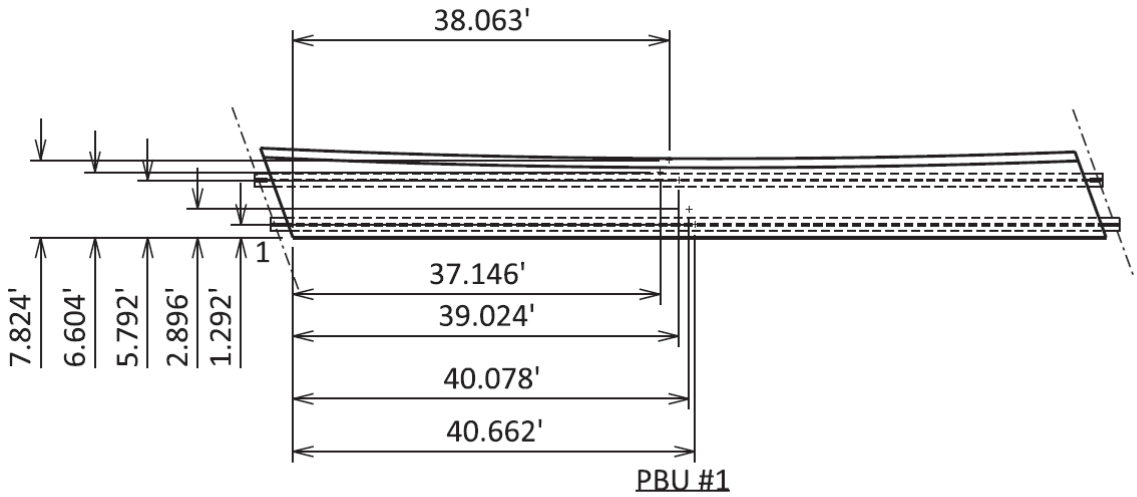

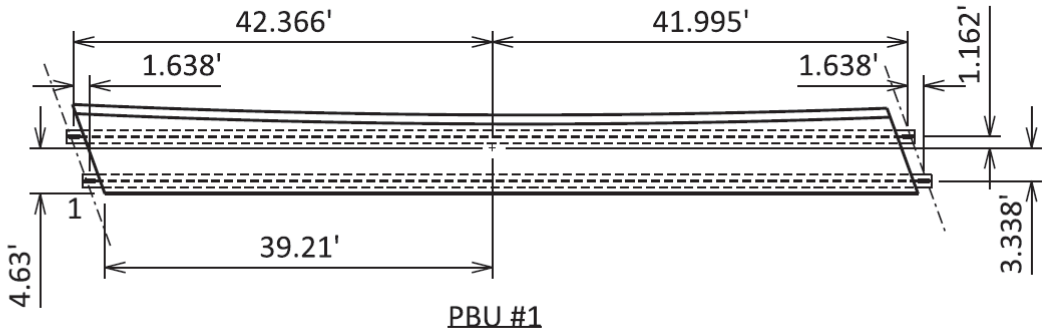

$\text{Haunch1} := 84.26\ \text{ft} \cdot b_{tf} \cdot 1.5\ \text{in} \cdot \gamma_c \cdot (1 + 0.5) = 3160\ \text{lbf}$

Half of the fascia beam haunch is calculated/measured with the overhang for PBU #1

$\text{Haunch2} := 84.26\ \text{ft} \cdot b_{tf} \cdot 1.5\ \text{in} \cdot \gamma_c \cdot (2) = 4213\ \text{lbf}$

Haunch for PBU #2

$\text{Haunch3} := \text{Haunch1} = 3160\ \text{lbf}$

Half of the fascia beam haunch is calculated/measured with the overhang for PBU #3

Vermont Agency of Transportation
RECEIVED
ON: April 18, 2016
and Checked for
CONFORMANCE
BY: SMC/JDG/WDL DATE: 04/26/2016

$Steel1x := 40.662\ ft$ $\qquad$ $Steel1y := 1.292\ ft$

$Steel2x := 39.024\ ft$ $\qquad$ $Steel2y := 5.792\ ft$

$Conc1Area := 132.4988\ ft^2$ *concrete area as measured in cadd*

$Tc1 := t_{deckOH} + Curb_{Height} = 1.57\ ft$

$W_{c1} := Conc1Area \cdot Tc1 \cdot \gamma_c = 31261.44\ lbf$

$C1x := 38.063\ ft$ $\qquad$ $C1y := 7.824\ ft$

$Conc2Area := 77.3941\ ft^2$ *concrete area as measured in cadd*

$Tc2 := t_{deckOH} = 1.33\ ft$

$W_{c2} := Conc2Area \cdot Tc2 \cdot \gamma_c = 15478.82\ lbf$

$C2x := 37.146\ ft$ $\qquad$ $C2y := 6.604\ ft$

$Conc3Area := 488.0345\ ft^2$ *concrete area as measured in cadd*

$Tc3 := t_{deck} = 0.71\ ft$

$W_{c3} := Conc3Area \cdot Tc3 \cdot \gamma_c = 51853.67\ lbf$

$C3x := 40.078\ ft$ $\qquad$ $C3y := 2.896\ ft$

$$PBU1_{wt} := W_{stl} \cdot 2 + W_{c1} + W_{c2} + W_{c3} = 135217\ lbf$$

$$PBU1_X := \frac{(Steel1x + Steel2x) \cdot W_{stl} + C1x \cdot W_{c1} + C2x \cdot W_{c2} + C3x \cdot W_{c3}}{PBU1_{wt}} = 39.21\ ft$$

$$PBU1_Y := \frac{(Steel1y + Steel2y) \cdot W_{stl} + C1y \cdot W_{c1} + C2y \cdot W_{c2} + C3y \cdot W_{c3}}{PBU1_{wt}} = 4.63\ ft$$

Haunch negligible in centroid calculations

CALDERWOOD ENGINEERING
222 RIVER ROAD
RICHMOND, ME 04357
PH. (207) 737-2007 FAX (207) 737-2008

Vermont Agency of Transportation
RECEIVED
ON: April 18, 2016
and Checked for
CONFORMANCE
BY: SMC/JDG/WDL DATE: 04/26/2016

Centroid of PBU #2 (left Fascia) - x & y dimensions are measured from the lower left hand obtuse corner of the precast decking (abutment #1 end, Easterly side)

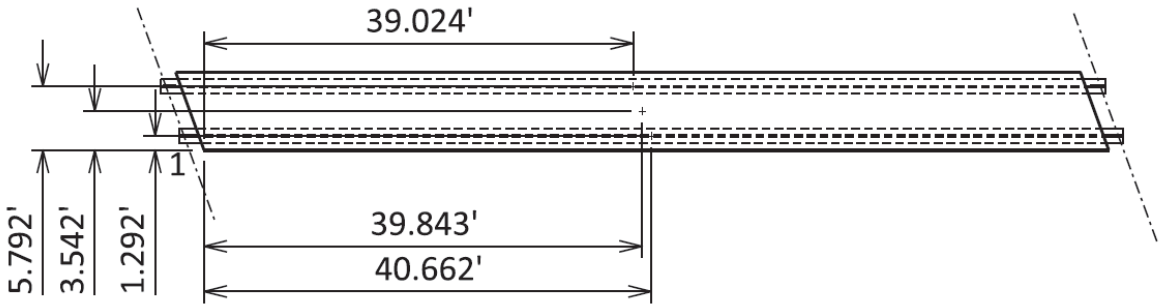

PBU #2

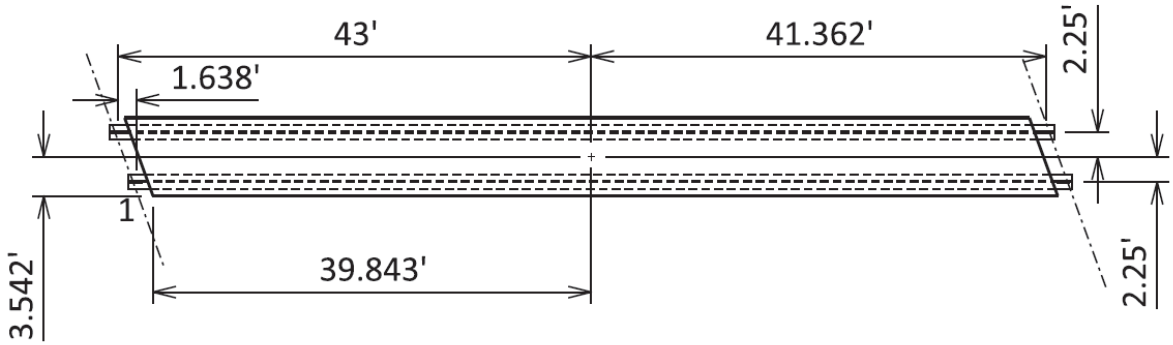

PBU #2

CALDERWOOD ENGINEERING
222 RIVER ROAD
RICHMOND, ME 04357
PH. (207) 737-2007 FAX (207) 737-2008

Vermont Agency of Transportation
RECEIVED
ON: April 18, 2016
and Checked for
CONFORMANCE
BY: SMC/JDG/WDL DATE: 04/26/2016

$Steel1x := 40.662\ ft$ $\qquad$ $Steel1y := 1.292\ ft$

$Steel2x := 39.024\ ft$ $\qquad$ $Steel2y := 5.792\ ft$

$Conc1Area := 0\ ft^2$ *concrete area as measured in cadd*

$Tc1 := t_{deckOH} + Curb_{Height} = 1.57\ ft$

$W_{c1} := Conc1Area \cdot Tc1 \cdot \gamma_c = 0\ lbf$

$C1x := 0\ ft$ $\qquad$ $C1y := 0\ ft$

$Conc2Area := 0\ ft^2$ *concrete area as measured in cadd*

$Tc2 := t_{deckOH} = 1.33\ ft$

$W_{c2} := Conc2Area \cdot Tc2 \cdot \gamma_c = 0\ lbf$

$C2x := 0\ ft$ $\qquad$ $C2y := 0\ ft$

$Conc3Area := 596.8739\ ft^2$ *concrete area as measured in cadd*

$Tc3 := t_{deck} = 0.71\ ft$

$W_{c3} := Conc3Area \cdot Tc3 \cdot \gamma_c = 63417.85\ lbf$

$C3x := 39.843\ ft$ $\qquad$ $C3y := 3.542\ ft$

$PBU2_{wt} := W_{stl} \cdot 2 + W_{c1} + W_{c2} + W_{c3} = 100040.93\ lbf$

$$PBU2_X := \frac{(Steel1x + Steel2x) \cdot W_{stl} + C1x \cdot W_{c1} + C2x \cdot W_{c2} + C3x \cdot W_{c3}}{PBU2_{wt}} = 39.84\ ft$$

$$PBU2_X := \frac{(Steel1y + Steel2y) \cdot W_{stl} + C1y \cdot W_{c1} + C2y \cdot W_{c2} + C3y \cdot W_{c3}}{PBU2_{wt}} = 3.54\ ft$$

Haunch negligible in centroid calculations

CALDERWOOD ENGINEERING
222 RIVER ROAD
RICHMOND, ME 04357
PH. (207) 737-2007 FAX (207) 737-2008

Vermont Agency of Transportation
RECEIVED
ON: April 18, 2016
and Checked for
CONFORMANCE
BY: SMC/JDG/WDL DATE: 04/26/2016

Centroid of PBU #3 (left Fascia) - x & y dimensions are measured from the lower left hand obtuse corner of the precast decking (abutment #1 end, Easterly side)

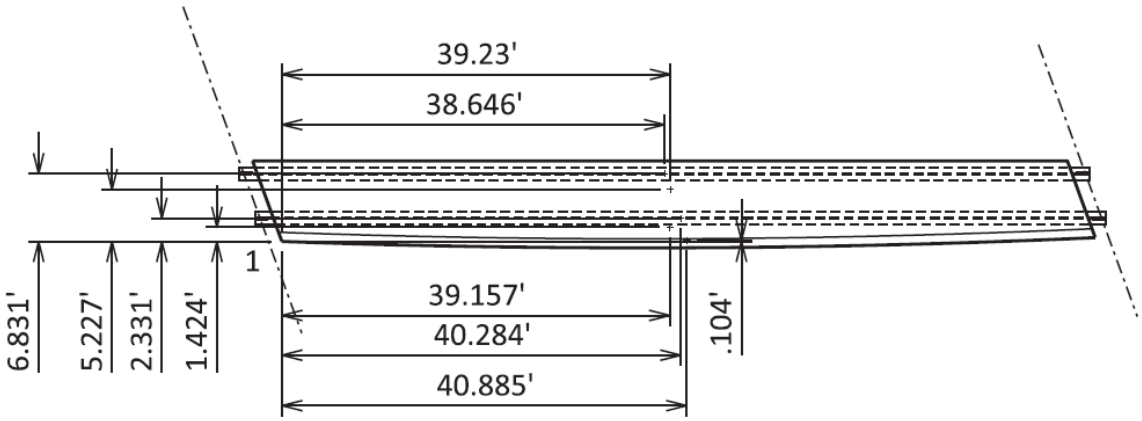

PBU #3

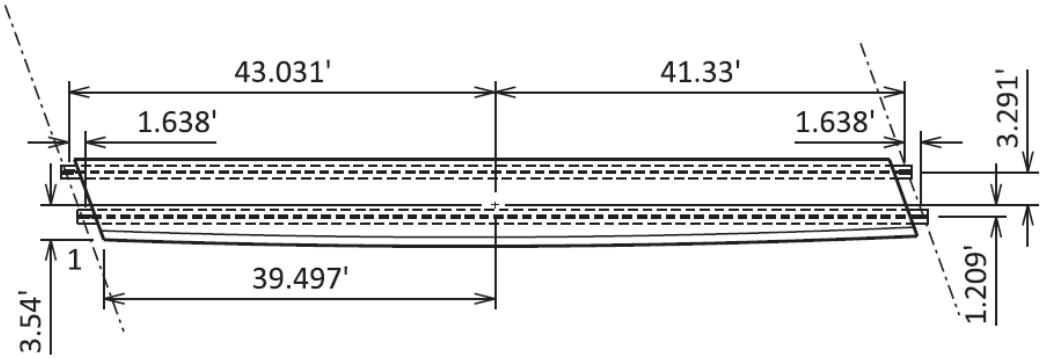

PBU #3

CALDERWOOD ENGINEERING
222 RIVER ROAD
RICHMOND, ME 04357
PH. (207) 737-2007 FAX (207) 737-2008

Vermont Agency of Transportation
RECEIVED
ON: April 18, 2016
and Checked for
CONFORMANCE
BY: SMC/JDG/WDL DATE: 04/26/2016

$Steel1x := 40.284\ ft$ $\quad$ $Steel1y := 2.331\ ft$

$Steel2x := 38.646\ ft$ $\quad$ $Steel2y := 6.831\ ft$

$Conc1Area := 77.1423\ ft^2$ *concrete area as measured in cadd*

$Tc1 := t_{deckOH} + Curb_{Height} = 1.57\ ft$

$W_{c1} := Conc1Area \cdot Tc1 \cdot \gamma_c = 18200.76\ lbf$

$C1x := 40.885\ ft$ $\quad$ $C1y := 0.104\ ft$

$Conc2Area := 148.9875\ ft^2$ *concrete area as measured in cadd*

$Tc2 := t_{deckOH} = 1.33\ ft$

$W_{c2} := Conc2Area \cdot Tc2 \cdot \gamma_c = 29797.5\ lbf$

$C2x := 39.157\ ft$ $\quad$ $C2y := 1.424\ ft$

$Conc3Area := 488.0373\ ft^2$ *concrete area as measured in cadd*

$Tc3 := t_{deck} = 0.71\ ft$

$W_{c3} := Conc3Area \cdot Tc3 \cdot \gamma_c = 51853.96\ lbf$

$C3x := 39.23\ ft$ $\quad$ $C3y := 5.227\ ft$

$PBU3_{wt} := W_{stl} \cdot 2 + W_{c1} + W_{c2} + W_{c3} = 136475.31\ lbf$

$$PBU3_X := \frac{(Steel1x + Steel2x) \cdot W_{stl} + C1x \cdot W_{c1} + C2x \cdot W_{c2} + C3x \cdot W_{c3}}{PBU3_{wt}} = 39.5\ ft$$

$$PBU3_X := \frac{(Steel1y + Steel2y) \cdot W_{stl} + C1y \cdot W_{c1} + C2y \cdot W_{c2} + C3y \cdot W_{c3}}{PBU3_{wt}} = 3.54\ ft$$

Haunch negligible in centroid calculations

CALDERWOOD ENGINEERING
222 RIVER ROAD
RICHMOND, ME 04357
PH. (207) 737-2007 FAX (207) 737-2008

Vermont Agency of Transportation
RECEIVED
ON: April 18, 2016
and Checked for
CONFORMANCE
BY: SMC/JDG/WDL DATE: 04/26/2016

Lifter location ID

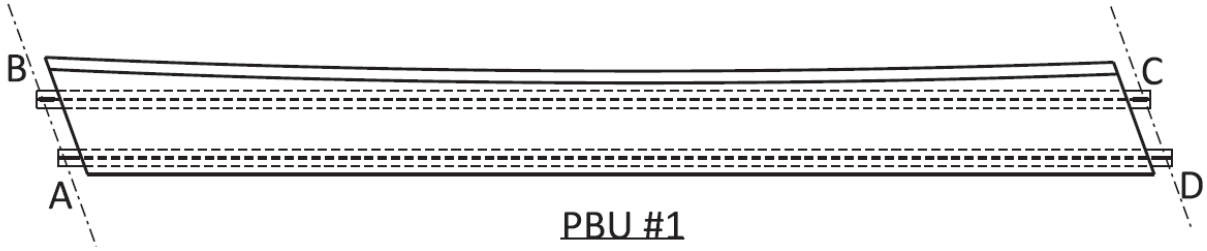

PBU #1

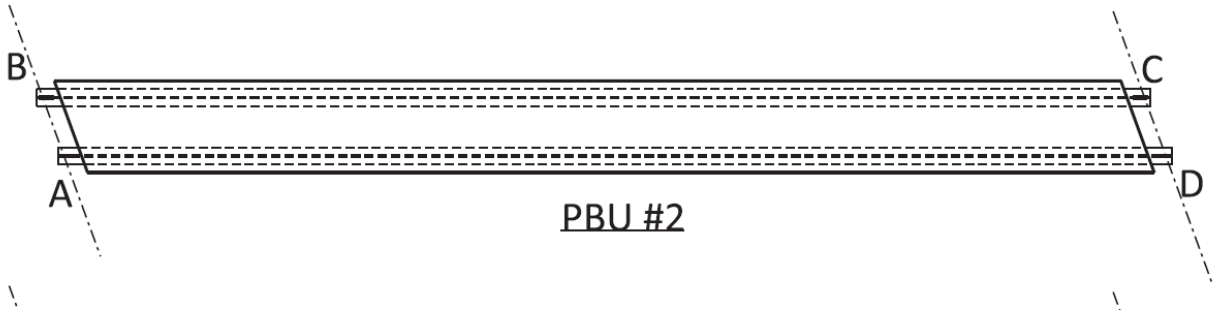

PBU #2

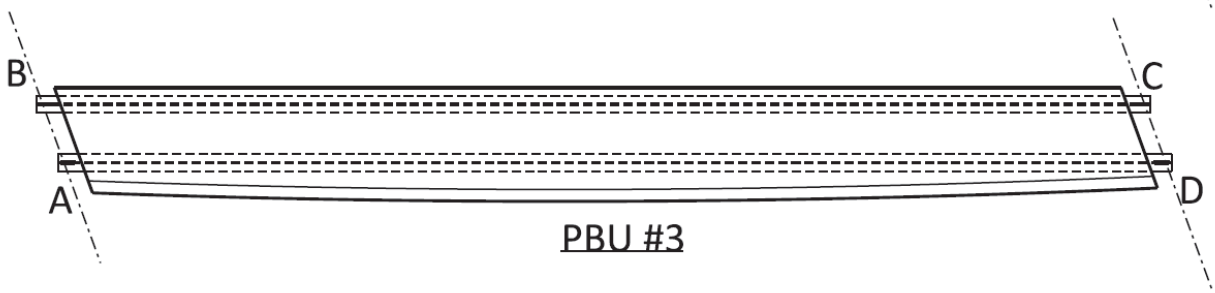

PBU #3

$$A_{pbu1} := \frac{PBU1_{wt} \cdot (41.995\ ft + 1.638\ ft)}{42.366\ ft + 41.995\ ft} \cdot \frac{1.162\ ft}{4.5\ ft} + \frac{Haunch1}{4} = 18.85\ kip$$

$$B_{pbu1} := \frac{PBU1_{wt} \cdot 41.995\ ft}{42.366\ ft + 41.995\ ft} \cdot \frac{3.338\ ft}{4.5\ ft} + \frac{Haunch1}{4} = 50.72\ kip$$

$$C_{pbu1} := \frac{PBU1_{wt} \cdot 42.366\ ft}{42.366\ ft + 41.995\ ft} \cdot \frac{3.338\ ft}{4.5\ ft} + \frac{Haunch1}{4} = 51.16\ kip$$

$$D_{pbu1} := \frac{PBU1_{wt} \cdot (42.366\ ft - 1.638\ ft)}{42.366\ ft + 41.995\ ft} \cdot \frac{1.162\ ft}{4.5\ ft} + \frac{Haunch1}{4} = 17.65\ kip$$

$$B_{pbu1} + C_{pbu1} = 101.88\ kip$$

Vermont Agency of Transportation
RECEIVED
ON: April 18, 2016
and Checked for
CONFORMANCE
BY: SMC/JDG/WDL DATE: 04/26/2016

$$A_{pbu2} := \frac{PBU2_{wt} \cdot (41.362\ ft + 1.638\ ft)}{41.362\ ft + 43\ ft} \cdot \frac{2.25\ ft}{4.5\ ft} + \frac{Haunch2}{4} = 26.55\ kip$$

$$B_{pbu2} := \frac{PBU2_{wt} \cdot 41.362\ ft}{41.362\ ft + 43\ ft} \cdot \frac{2.25\ ft}{4.5\ ft} + \frac{Haunch2}{4} = 25.58\ kip$$

$$C_{pbu2} := \frac{PBU2_{wt} \cdot 43\ ft}{41.362\ ft + 43\ ft} \cdot \frac{2.25\ ft}{4.5\ ft} + \frac{Haunch2}{4} = 26.55\ kip$$

$$D_{pbu2} := \frac{PBU2_{wt} \cdot (43\ ft - 1.638\ ft)}{41.362\ ft + 43\ ft} \cdot \frac{2.25\ ft}{4.5\ ft} + \frac{Haunch2}{4} = 25.58\ kip$$

$$A_{pbu2} + D_{pbu2} = 52.13\ kip$$

$$A_{pbu3} := \frac{PBU3_{wt} \cdot (41.33\ ft + 1.638\ ft)}{41.33\ ft + 43.031\ ft} \cdot \frac{3.291\ ft}{4.5\ ft} + \frac{Haunch3}{4} = 51.63\ kip$$

$$B_{pbu3} := \frac{PBU3_{wt} \cdot 41.33\ ft}{41.33\ ft + 43.031\ ft} \cdot \frac{1.209\ ft}{4.5\ ft} + \frac{Haunch3}{4} = 18.75\ kip$$

$$C_{pbu3} := \frac{PBU3_{wt} \cdot 43.031\ ft}{41.33\ ft + 43.031\ ft} \cdot \frac{1.209\ ft}{4.5\ ft} + \frac{Haunch3}{4} = 19.49\ kip$$

$$D_{pbu3} := \frac{PBU3_{wt} \cdot (43.031\ ft - 1.638\ ft)}{41.33\ ft + 43.031\ ft} \cdot \frac{3.291\ ft}{4.5\ ft} + \frac{Haunch3}{4} = 49.76\ kip$$

$$A_{pbu3} + D_{pbu3} = 101.39\ kip$$

CALDERWOOD ENGINEERING
222 RIVER ROAD
RICHMOND, ME 04357
PH. (207) 737-2007 FAX (207) 737-2008

Vermont Agency of Transportation
RECEIVED
ON: April 18, 2016
and Checked for
CONFORMANCE
BY: SMC/JDG/WDL DATE: 04/26/2016

PBU section governed by PBU #1 by inspection - take load as uniform on the fascia girder use PBU#2 for composite section properties as this is conservative, by adding the heaviest section assuming it is carried by the lightest section

$$w_{eff11} := \frac{B_{pbu1} + C_{pbu1}}{42.366\ ft + 41.995\ ft} = 1207.68\ plf$$

$$w_{eff21} := \frac{A_{pbu1} + B_{pbu1}}{42.366\ ft + 41.995\ ft} = 824.66\ plf$$

$$L_{pbu1} := 42.366\ ft + 41.995\ ft = 84.36\ ft$$

$$w_{eff12} := \frac{B_{pbu2} + C_{pbu2}}{43\ ft + 41.362\ ft} = 617.9\ plf$$

$$w_{eff22} := \frac{A_{pbu2} + B_{pbu2}}{43\ ft + 41.362\ ft} = 617.9\ plf$$

$$L_{pbu2} := 43\ ft + 41.362\ ft = 84.36\ ft$$

$$w_{eff13} := \frac{B_{pbu3} + C_{pbu3}}{43.031\ ft + 41.33\ ft} = 453.36\ plf$$

$$w_{eff23} := \frac{A_{pbu3} + B_{pbu3}}{43.031\ ft + 41.33\ ft} = 834.27\ plf$$

$$L_{pbu3} := 43.031\ ft + 41.33\ ft = 84.36\ ft$$

$$R_b := \max\left(B_{pbu1}, B_{pbu2}, B_{pbu3}\right) = 50.72\ kip$$

$$R_c := \max\left(C_{pbu1}, C_{pbu2}, C_{pbu3}\right) = 51.16\ kip$$

$$R_a := \max\left(A_{pbu1}, A_{pbu2}, A_{pbu3}\right) = 51.63\ kip$$

$$R_d := \max\left(D_{pbu1}, D_{pbu2}, D_{pbu3}\right) = 49.76\ kip$$

CALDERWOOD ENGINEERING
222 RIVER ROAD
RICHMOND, ME 04357
PH. (207) 737-2007 FAX (207) 737-2008

Vermont Agency of Transportation
RECEIVED
ON: April 18, 2016
and Checked for
CONFORMANCE
BY: SMC/JDG/WDL DATE: 04/26/2016

Project: Craftsbury, Vt - Lifting and shipping Calculations for PBU's
Contractor: CCS Constructors
Client: JP Carrara & Sons
Engineering Design: Calderwood Engineering
Design Computations by: Eric T. Calderwood, PE

Project Notes:
Precast concrete decking cast on fabricated welded plate girders

Decking will be cantilevered beyond the end of the truck, impact due to handling and transportation will be taken as 50% (ie 1.5 factor for impact)

Girders are straight - bridge is curved, radius is applied to bridge by varying the overhang, worst case condition will be assumed with the maximum overhang calculated for weight purposes, but the minimum overhange calculated for composite properties, and action

$L_{brg} := 84.974\ ft$ total length of girders bearing to bearing measured along long chord

$skew := 70\ deg$

$E_{brg} := \frac{5\ in}{\sin(skew)} = 0.44\ ft$

$L_{oa} := L_{brg} + E_{brg} \cdot 2 = 85.86\ ft$ total length of girders (measured along long chord, 85.00 feet along the 1000 ft radius) + 5 inches to each end of girder from the centerling of bearing to the end of girder

$OH := \frac{3\ ft + 4\ in - 9\ in}{2} = 1.29\ ft$ Overhang Used for structural capacity (min)

$K_1 := 1.0$

$\gamma_c := 150\ pcf$

$Curb_{Width} := 11\ in$ *Concrete Shear key/ pavement backer width*

$\gamma_{stl} := 490\ pcf$

$Curb_{Height} := 2.875\ in$ *Concrete Shear key/ pavement backer height*

$f'_c := 4\ ksi$

$$E_c := 33000 \cdot K_1 \cdot \left(\left(\frac{\gamma_c}{\frac{kip}{ft^3}} \right)^{1.5} \right) \cdot \sqrt{f'_c \cdot ksi}$$

$E_c = 3834.25\ ksi$

CALDERWOOD ENGINEERING
222 RIVER ROAD
RICHMOND, ME 04357
PH. (207) 737-2007 FAX (207) 737-2008

Vermont Agency of Transportation
RECEIVED
ON: April 18, 2016
and Checked for
CONFORMANCE
BY: SMC/JDG/WDL DATE: 04/26/2016

Girder Properties:

Beam geometry/ Area/ y/ Iox/ Ioy Positive Moment Region

$b_{bf} := 16.0\ in$

$t_{bf} := 1\ in$ $\quad A_{bf} := b_{bf} \cdot t_{bf} = 16\ in^2$ $\quad y_{bf} := \frac{t_{bf}}{2}$ $\quad I_{oxbf} := \frac{b_{bf} \cdot t_{bf}^3}{12}$ $\quad I_{oybf} := \frac{t_{bf} \cdot b_{bf}^3}{12}$

$d_w := 36\ in$

$t_w := 0.625\ in$ $\quad A_w := d_w \cdot t_w = 22.5\ in^2$ $\quad y_w := t_{bf} + \frac{d_w}{2}$ $\quad I_{oxw} := \frac{t_w \cdot d_w^3}{12}$ $\quad I_{oyw} := \frac{d_w \cdot t_w^3}{12}$

$b_{tf} := 16.0\ in$

$t_{tf} := 1\ in$ $\quad A_{tf} := b_{tf} \cdot t_{tf} = 16\ in^2$ $\quad y_{tf} := t_{bf} + d_w + \frac{t_{tf}}{2}$ $\quad I_{oxtf} := \frac{b_{tf} \cdot t_{tf}^3}{12}$ $\quad I_{oytf} := \frac{t_{tf} \cdot b_{tf}^3}{12}$

$d_{beam} := t_{tf} + d_w + t_{bf} = 38\ in$

$A_g := b_{tf} \cdot t_{tf} + b_{bf} \cdot t_{bf} + d_w \cdot t_w = 54.5\ in^2$

$y_{bar} := \frac{(A_{bf} \cdot y_{bf} + A_w \cdot y_w + A_{tf} \cdot y_{tf})}{A_g} = 19\ in$ *Measured from Bottom of Beam to NA*

$I_x := I_{oxbf} + A_{bf} \cdot (y_{bf} - y_{bar})^2 + I_{oxw} + A_w \cdot (y_w - y_{bar})^2 + I_{oxtf} + A_{tf} \cdot (y_{tf} - y_{bar})^2 = 13384.67\ in^4$

$S_{tf} := \frac{I_x}{(d_{beam} - y_{bar})} = 704.46\ in^3$ $\quad S_{bf} := \frac{I_x}{y_{bar}} = 704.46\ in^3$

$I_y := I_{oybf} + I_{oyw} + I_{oytf} = 683.4\ in^4$

$I_{ttf} := \frac{b_{tf}^3 \cdot t_{tf}}{12} + \frac{(d_w - y_{bar})}{6} \cdot \frac{t_w^3}{12} = 341.39\ in^4$ *Moment of inertia of the top flagne and 1/6 of the depth of the web in compression about the Y axis*

$A_{ttf} := b_{tf} \cdot t_{tf} + \frac{(d_w - y_{bar})}{6} \cdot t_w = 17.77\ in^2$ $\quad r_{ttf} := \sqrt{\frac{I_{ttf}}{A_{ttf}}} = 4.38\ in$ *Radius of Gyration of the top flange and 1/6 of the web depth in compression*

$S := 4.5\ ft$ *Girder to girder spacing*

CALDERWOOD ENGINEERING
222 RIVER ROAD
RICHMOND, ME 04357
PH. (207) 737-2007 FAX (207) 737-2008

Vermont Agency of Transportation
RECEIVED
ON: April 18, 2016
and Checked for
CONFORMANCE
BY: SMC/JDG/WDL DATE: 04/26/2016

Girders - Composite properties:

$E_B := 29000\ ksi$

$E_D := E_c = 3834.25\ ksi$

$n := \frac{E_B}{E_D}$

$A_{deckLT} := \left(\frac{S}{2} + OH\right) \cdot t_{deck} \cdot \frac{E_D}{3 \cdot E_B} = 0.11\ ft^2$

Self weight of deck applied to the long term section (although for our purposes we could likely use the short term section for all of these calculations this is a conservative approach as it will yield higher stresses)

$A_{deckST} := \left(\frac{S}{2} + OH\right) \cdot t_{deck} \cdot \frac{E_D}{E_B} = 0.33\ ft^2$

Impact component applied to the short term section properties

$$y_{lt} := \frac{\left(A_{deckLT} \cdot \left(\frac{t_{deck}}{2} + d_{beam}\right) + A_g \cdot y_{bar}\right)}{\left(A_g + A_{deckLT}\right)} = 24.26\ in$$

as measured from bottom of bottom flange

$$y_{st} := \frac{\left(A_{deckST} \cdot \left(\frac{t_{deck}}{2} + d_{beam}\right) + A_g \cdot y_{bar}\right)}{\left(A_g + A_{deckST}\right)} = 29.86\ in$$

as measured from bottom of bottom flange

$d_{tot} := t_{deck} + t_{tf} + d_w + t_{bf} = 46.5\ in$

Haunch is ignored for strength and capacity considerations

$$I_{LT} := t_{deck}^3 \cdot \left(\frac{S}{2} + OH\right) \cdot \frac{E_D}{3 \cdot E_B} + A_{deckLT} \cdot \left(d_{tot} - \frac{t_{deck}}{2} - y_{lt}\right)^2 + I_x + A_g \cdot \left(y_{lt} - y_{bar}\right)^2$$

$I_{LT} = 21195.5\ in^4$

$S_{deckLT} := \frac{I_{LT}}{d_{tot} - y_{lt}} = 952.88\ in^3$ $\quad S_{tfLT} := \frac{I_{LT}}{d_{beam} - y_{lt}} = 1542.21\ in^3$ $\quad S_{bfLT} := \frac{I_{LT}}{y_{lt}} = 873.81\ in^3$

$$I_{ST} := t_{deck}^3 \cdot \left(\frac{S}{2} + OH\right) \cdot \frac{E_D}{E_B} + A_{deckST} \cdot \left(d_{tot} - \frac{t_{deck}}{2} - y_{st}\right)^2 + I_x + A_g \cdot \left(y_{st} - y_{bar}\right)^2$$

$I_{ST} = 30595.43\ in^4$

$S_{deckST} := \frac{I_{ST}}{d_{tot} - y_{st}} = 1838.57\ in^3$ $\quad S_{tfST} := \frac{I_{ST}}{d_{beam} - y_{st}} = 3758.26\ in^3$ $\quad S_{bfST} := \frac{I_{ST}}{y_{st}} = 1024.66\ in^3$

CALDERWOOD ENGINEERING
222 RIVER ROAD
RICHMOND, ME 04357
PH. (207) 737-2007 FAX (207) 737-2008

Vermont Agency of Transportation
RECEIVED
ON: April 18, 2016
and Checked for
CONFORMANCE
BY: SMC/JDG/WDL DATE: 04/26/2016

Loading Demand Computations:

Shear Handling

$IM := 50\%$ for transport and handling.

$\gamma_{dc} := 1.5$ for Strength IV configuration (governs by inspection for handling and transit purposes)

$TransitOH1 := 16\ ft + \frac{1.638\ ft}{2} = 16.82\ ft$ $TransitOH2 := 16\ ft - \frac{1.638\ ft}{2} = 15.18\ ft$

$L_{support} := L_{oa} - TransitOH1 - TransitOH2 = 53.86\ ft$

$R1 := R_b = 50.72\ kip$ $R2 := R_c = 51.16\ kip$

$V_1 := TransitOH1 \cdot \langle -w_{eff11} \rangle = -20.31\ kip$

$V_2 := R1 + V_1 = 30.41\ kip$

$V_3 := V_2 - L_{support} \cdot w_{eff11} = -34.64\ kip$

$V_4 := V_3 + R2 = 16.52\ kip$

$V := \max(\mathrm{abs}(\langle V_1 \rangle), \mathrm{abs}(\langle V_2 \rangle), \mathrm{abs}(\langle V_3 \rangle), \mathrm{abs}(\langle V_4 \rangle)) = 34.64\ kip$

$M_1 := \frac{V_1}{2} \cdot TransitOH1 = -170.81\ ft \cdot kip$ $X1 := \frac{V_2}{w_{eff11}} = 25.18\ ft$

$M_2 := \frac{V_2}{2} \cdot X1 + M_1 = 212.01\ ft \cdot kip$

$M_{OHstl} := \frac{R1 + R2 - w_{eff11} \cdot TransitOH1}{2} \cdot TransitOH1 = 685.95\ ft \cdot kip$

fluid load on steel girder with girder supported at centerline of bearings (as cast in bed) this is a locked in stress in the steel girder resulting in compression in the top flange and tension in the bottom flange) at the transit overhang distance from ends of girders

$M_{midstl} := \frac{w_{eff11} \cdot L_{brg}^2}{8} = 1090.02\ ft \cdot kip$

fluid load on steel girder with girder supported at centerline of bearings (as cast in bed) this is a locked in stress in the steel girder resulting in compression in the top flange and tension in the bottom flange at midspan)

Vermont Agency of Transportation
RECEIVED
ON: April 18, 2016
and Checked for
CONFORMANCE
BY: SMC/JDG/WDL DATE: 04/26/2016

$$f_{tfOHLOCKED} := \frac{M_{OHstl}}{S_{tf}} = 11.68 \text{ ksi}$$

$$f_{tfmidLOCKED} := \frac{M_{midstl}}{S_{tf}} = 18.57 \text{ ksi}$$

$$f_{bfOHLOCKED} := \frac{M_{OHstl}}{S_{bf}} = 11.68 \text{ ksi}$$

$$f_{bfmidLOCKED} := \frac{M_{midstl}}{S_{bf}} = 18.57 \text{ ksi}$$

$$f_{stlOHtf} := f_{tfOHLOCKED} \cdot \gamma_{dc} + \frac{M_1 \cdot \gamma_{dc}}{S_{tfLT}} + \frac{M_1 \cdot \gamma_{dc} \cdot IM}{S_{tfST}} = 15.12 \text{ ksi}$$

compression in top flange steel during shipping (factored with impact)

$$f_{stlOHbf} := -f_{tfOHLOCKED} \cdot \gamma_{dc} - \frac{M_1 \cdot \gamma_{dc}}{S_{bfLT}} - \frac{M_1 \cdot \gamma_{dc} \cdot IM}{S_{bfST}} = -12.51 \text{ ksi}$$

tension in bottom flange steel during shipping (factored with impact)

$$f_{deckOH} := \frac{M_1 \cdot \gamma_{dc}}{S_{deckLT} \cdot 3 \cdot n} + \frac{M_1 \cdot \gamma_{dc} \cdot IM}{S_{deckST} \cdot n} = -0.25 \text{ ksi}$$

Factored Strength IV tension in extreme fiber of deck

$$f_{decksvcOH} := \frac{M_1}{S_{deckLT} \cdot 3 \cdot n} + \frac{M_1 \cdot IM}{S_{deckST} \cdot n} = -0.17 \text{ ksi}$$

Service Load tension in extreme fiber of deck at Service I with impact

$$f_{midtf} := f_{tfmidLOCKED} \cdot \gamma_{dc} + \frac{M_2 \cdot \gamma_{dc}}{S_{tfLT}} + \frac{M_2 \cdot \gamma_{dc} \cdot IM}{S_{tfST}} = 30.83 \text{ ksi}$$

compression in top flange steel during shipping (factored with impact) at midspan

$$f_{midbf} := -f_{tfmidLOCKED} \cdot \gamma_{dc} - \frac{M_2 \cdot \gamma_{dc}}{S_{bfLT}} - \frac{M_2 \cdot \gamma_{dc} \cdot IM}{S_{bfST}} = -34.08 \text{ ksi}$$

Tension in bottom flange steel during shipping (factored with impact) at midspan

$$f_{deckmid} := \frac{M_2 \cdot \gamma_{dc}}{S_{deckLT} \cdot 3 \cdot n} + \frac{M_2 \cdot \gamma_{dc} \cdot IM}{S_{deckST} \cdot n} = 0.31 \text{ ksi}$$

Factored Strength IV compression in extreme fiber of deck

$$f_{decksvcmid} := \frac{M_2}{S_{deckLT} \cdot 3 \cdot n} + \frac{M_2 \cdot IM}{S_{deckST} \cdot n} = 0.21 \text{ ksi}$$

Service Load compression in extreme fiber of deck at Service I with impact

CALDERWOOD ENGINEERING
222 RIVER ROAD
RICHMOND, ME 04357
PH. (207) 737-2007 FAX (207) 737-2008

Vermont Agency of Transportation
RECEIVED
ON: April 18, 2016
and Checked for
CONFORMANCE
BY: SMC/JDG/WDL DATE: 04/26/2016

Calculation of yield moment at
Strength IV condition of Girders:

Appendix D6.2.2 Composite Sections in Positive Flexure

$F_y := 50\ \text{ksi}$

$M_{D1} := M_{midstl} = 1090.02\ \text{ft}\cdot\text{kip}$

$M_{D2} := 0\ \text{ft}\cdot\text{kip}$ *for our purposes in determining capacity at shipping d2 is 0*

$$M_{ADtf} := S_{tfST} \cdot \left(F_y - \frac{M_{D1}}{S_{tf}} - \frac{M_{D2}}{S_{tfLT}}\right) = 9844.19\ \text{ft}\cdot\text{kip}$$

$$M_{ADbf} := S_{bfST} \cdot \left(F_y - \frac{M_{D1}}{S_{bf}} - \frac{M_{D2}}{S_{bfLT}}\right) = 2683.94\ \text{ft}\cdot\text{kip}$$

$$M_{AD} := min\left(M_{ADtf}, M_{ADbf}\right) = 2683.94\ \text{ft}\cdot\text{kip}$$

$$M_y := M_{AD} + M_{D1} + M_{D2} = 3773.96\ \text{ft}\cdot\text{kip}$$

CALDERWOOD ENGINEERING
222 RIVER ROAD
RICHMOND, ME 04357
PH. (207) 737-2007 FAX (207) 737-2008

Vermont Agency of Transportation
RECEIVED
ON: April 18, 2016
and Checked for
CONFORMANCE
BY: SMC/JDG/WDL DATE: 04/26/2016

Check Plastic Moment for girder:

Appendix D6.1-1 Composite Sections in Positive Flexure

$$P_S := 0.85 \cdot f'_c \cdot \left(\frac{S}{2} + OH\right) \cdot t_{deck} = 1228.25 \text{ kip}$$

$$P_C := F_y \cdot A_{tf} = 800 \text{ kip}$$

per Appendix Pc stands for Compression flange

$$P_W := F_y \cdot A_w = 1125 \text{ kip}$$

$$P_T := F_y \cdot A_{bf} = 800 \text{ kip}$$

per Appendix Pt stands for Tension flange

$$\text{Case} := \begin{cases} 1 & \text{if } \langle P_T + P_W \rangle > \langle P_C + P_S \rangle \\ 2 & \text{else if } \langle P_T + P_W + P_C \rangle > P_S \\ 3 & \text{else} \end{cases} = 2$$

The Plastic Neutral Axis is in the top flange this is not unexpected, the reinforcing steel is neglected as part of the section for the sake of simplicity and conservatism.

$$Y_{pbar} := \frac{t_{tf}}{2} \cdot \left(\frac{\langle P_W + P_T - P_S \rangle}{P_C} + 1\right) = 0.94 \text{ in}$$

Measured from the top of the top flange

$$d_s := \frac{t_{deck}}{2} + Y_{pbar} = 5.19 \text{ in}$$

$$d_w := t_{tf} - Y_{pbar} + \frac{d_w}{2} = 18.06 \text{ in}$$

$$d_{bf} := t_{tf} - Y_{pbar} + d_w + t_{bf} = 19.13 \text{ in}$$

$$M_p := \frac{P_C}{2 \cdot t_{tf}} \cdot \left(Y_{pbar}^{\ 2} + \langle t_{tf} - Y_{pbar} \rangle^2\right) + \langle P_S \cdot d_s + P_W \cdot d_w + P_T \cdot d_{bf} \rangle = 3528.88 \text{ ft·kip}$$

CALDERWOOD ENGINEERING
222 RIVER ROAD
RICHMOND, ME 04357
PH. (207) 737-2007 FAX (207) 737-2008

Vermont Agency of Transportation
RECEIVED
ON: April 18, 2016
and Checked for
CONFORMANCE
BY: SMC/JDG/WDL DATE: 04/26/2016

Nominal Flexural resistance per LRFD 6.10.7.1.2

$D_p := Y_{pbar} + t_{deck} = 9.44$ in

$D_{tot} := t_{deck} + d_{beam} = 46.5$ in

$\frac{D_p}{D_{tot}} = 0.2$ Dp/Dtot > 0.1 therefor full plastic moment cannot be reached

$M_n := min\left(M_p \cdot \left(1.07 - 0.7 \cdot \frac{D_p}{D_{tot}}\right), 1.3 \cdot M_y\right) = 3274.67$ ft·kip Nominal moment capacity per 6.10.7.1.2-3 section during transit section is continuous over interior supports therefore 1.3x yield moment will be the maximum allowable positive moment capacity

$\varphi_f := 1.00$ Resistance Factor from LRFD 6.5.4.2

$M_r := \varphi_f \cdot M_n = 3274.67$ ft·kip

$Sling := 60$ deg Minimum angle of slings from the horizontal when lifting in the field (induces some positive moment in girders at midspan, has little to no effect on overhang negative moments

$R_{hz} := \frac{\max(R1, R2)}{\tan(Sling)} = 29.54$ kip

$M_{str4} := \gamma_{dc} \cdot M_2 \cdot (100\% + IM) + R_{hz} \cdot \gamma_{dc} \cdot \langle d_{tot} - y_{lt} \rangle + R_{hz} \cdot \gamma_{dc} \cdot IM \cdot \langle d_{tot} - y_{st} \rangle = 589.86$ ft·kip

if $M_r > M_{str4}$
  "Positive Moment Girder Strength IV flexure okay"
else
  "Positive Moment Girder Strength IV flexure no good"

= "Positive Moment Girder Strength IV flexure okay"

CALDERWOOD ENGINEERING
222 RIVER ROAD
RICHMOND, ME 04357
PH. (207) 737-2007 FAX (207) 737-2008

Vermont Agency of Transportation
RECEIVED
ON: April 18, 2016
and Checked for
CONFORMANCE
BY: SMC/JDG/WDL DATE: 04/26/2016

Check Negative moment capacity assuming non composite construction for steel stresses

$R_h := 1.0$ *section is not hybrid yield strength is the same in webs as it is in flanges*

$F_{tf} := \varphi_f \cdot R_h \cdot F_y = 50$ ksi

flexural capacity of tension flange bottom flange is in tension at all points in the girder regardless of the transit overhang of 16' due to the locked in stresses during the deck placement with the girders supported at CL bearings 6.10.3.2.2

$$f_{tens} := \max\left(\left|\mathrm{abs}\left(f_{midbf} + \frac{R_{hz} \cdot \gamma_{dc} \cdot (d_{tot} - y_{lt})}{S_{bfLT}} + \frac{R_{hz} \cdot \gamma_{dc} \cdot IM \cdot (d_{tot} - y_{st})}{S_{bfST}}\right)\right|, \mathrm{abs}\left(f_{stlOHbf}\right)\right) = 32.59 \text{ ksi}$$

$$\lambda_f := \frac{b_{tf}}{t_{tf} \cdot 2} = 8$$

flexural capacity of compression flange top flange is in compression at all points in the girder regardless of the transit overhang of 16' due to the locked in stresses during the deck placement with the girders supported at CL bearings 6.10.8.2.2

$\lambda_{pf} := 9.2$

$R_{bflex} := 1$

$F_{nc} := R_{bflex} \cdot R_h \cdot F_y = 50$ ksi

$F_{rc} := \varphi_f \cdot F_{nc} = 50$ ksi

Flexural resistance based on local buckling stress, no need to check lateral torsional buckling as top flange is compression flange and is prevented from twisting by the concrete deck at every location.

$$f_{comp} := \max\left(\left|\mathrm{abs}\left(f_{midtf} + \frac{R_{hz} \cdot \gamma_{dc} \cdot (d_{tot} - y_{lt})}{S_{tfLT}} + \frac{R_{hz} \cdot \gamma_{dc} \cdot IM \cdot (d_{tot} - y_{st})}{S_{tfST}}\right)\right|, \mathrm{abs}\left(f_{stlOHtf}\right)\right) = 31.57 \text{ ksi}$$

Steel Section is okay during shipping and handling as factored stresses at strength IV with an impact of 50% result in much lower than factored resistance stresses for strength conditions, for both the compression and tension flanges.

CALDERWOOD ENGINEERING
222 RIVER ROAD
RICHMOND, ME 04357
PH. (207) 737-2007 FAX (207) 737-2008

Vermont Agency of Transportation
RECEIVED
ON: April 18, 2016
and Checked for
CONFORMANCE
BY: SMC/JDG/WDL DATE: 04/26/2016

Shear computations: (vertical shear)

Nominal resistance of Unstiffened webs per 6.10.9.2

$D := d_w = 18.06\ \text{in}$ $\quad F_{yw} := F_y = 50\ \text{ksi}$

$V_p := 0.58 \cdot t_w \cdot D \cdot F_{yw} = 327.42\ \text{kip}$

$k_u := 5$ for unstiffened panels per 6.10.9.2

$\frac{D}{t_w} = 28.903$ $\quad \varphi_v := 1.0$ Per 6.5.4.2 for Shear

$1.12 \cdot \sqrt{\frac{E_B \cdot k_u}{F_{yw}}} = 60.31$ $\quad 1.40 \cdot \sqrt{\frac{E_B \cdot k_u}{F_{yw}}} = 75.39$

Because D/tw < 60.31:

$C_u := 1$

$V_{nu} := C_u \cdot V_p = 327.42\ \text{kip}$

$V_{ru} := \varphi_v \cdot V_{nu} = 327.42\ \text{kip}$ for unstiffened regions

$V_{max} := \gamma_{dc} \cdot (100\% + IM) \cdot \max\left(\text{abs}\left(V_1\right), \text{abs}\left(V_2\right), \text{abs}\left(V_3\right), \text{abs}\left(V_4\right)\right) = 77.94\ \text{kip}$ *Factored maximum shear with lifters at Transit overhang location*

$R_{strIV} := \gamma_{dc} \cdot (100\% + IM) \cdot \max(R1, R2) = 115.11\ \text{kip}$ *conservatively taking the entire reaction as the shear in the girder*

$V_{ru} := \varphi_v \cdot V_{nu} = 327.42\ \text{kip}$ Maximum factored Shear at ends of girders is < factored shear resistance therefor shear is okay no transverse stiffeners are required.

CALDERWOOD ENGINEERING
222 RIVER ROAD
RICHMOND, ME 04357
PH. (207) 737-2007 FAX (207) 737-2008

Vermont Agency of Transportation
RECEIVED
ON: April 18, 2016
and Checked for
CONFORMANCE
BY: SMC/JDG/WDL DATE: 04/26/2016

Check Deck Stresses during lifting and transport - Strength IV

$$f_c := f_{deckmid} + \frac{R_{hz} \cdot \gamma_{dc} \cdot \langle d_{tot} - y_{lt} \rangle}{S_{deckLT} \cdot 3 \cdot n} + \frac{R_{hz} \cdot \gamma_{dc} \cdot IM \cdot \langle d_{tot} - y_{st} \rangle}{S_{deckST} \cdot n} = 0.39 \text{ ksi}$$

$\varphi_f := 0.90$ *for flexural compression in tension controlled sections per 5.5.4.2*

$\beta_1 := 0.85$ $f'_c = 4 \text{ ksi}$

$F_c := \varphi_f \cdot f'_c \cdot 0.85 = 3.06 \text{ ksi}$ *>> strength IV compressive stress*

Check Deck Stresses during lifting and transport - Service I

$$f_c := f_{decksvcmid} + \frac{R_{hz} \cdot \langle d_{tot} - y_{lt} \rangle}{S_{deckLT} \cdot 3 \cdot n} + \frac{R_{hz} \cdot IM \cdot \langle d_{tot} - y_{st} \rangle}{S_{deckST} \cdot n} = 0.26 \text{ ksi}$$

$\varphi_w := 1.0$

$F_{csvc} := 0.60 \cdot \varphi_w \cdot f'_c = 2.4 \text{ ksi}$ *Taken as service limit for fully prestressed concrete at the service limit state for compression resistance at the top of the deck due to shipping and handling 5.9.4.2.1-1*

$F_{t2} := 0.24 \cdot \sqrt{f'_c \cdot \text{ksi}} = 0.48 \text{ ksi}$ *If Deck reinforcement is more than sufficient to resist the total tension force with the mild reinforcement at figured at only 30 ksi stress (0.5Fy)*

$F_{t1} := 0.0948 \cdot \sqrt{f'_c \cdot \text{ksi}} = 0.19 \text{ ksi}$ *allowable temporary tensile stresses in the concrete figured uncracked and without bonded reinforcement (since this is higher than actual tensile stresses anticipated, there is no reason to check the tensile carrying capacity of the longitudinal decking bars)*

$f_t := -f_{decksvcOH} = 0.17 \text{ ksi}$ *Actual concrete decking tension stress figured on the uncracked section*

CALDERWOOD ENGINEERING
222 RIVER ROAD
RICHMOND, ME 04357
PH. (207) 737-2007 FAX (207) 737-2008

Vermont Agency of Transportation
RECEIVED
ON: April 18, 2016
and Checked for
CONFORMANCE
BY: SMC/JDG/WDL DATE: 04/26/2016

Lifting from the lifting lugs at the ends of the beams will result in a higher positive moment but will by inspection be more capable of handling the load as the beam is fully in positive flexure and not the negative flexure.

$$M_{ustrIV} := \frac{(100\% + IM) \cdot \gamma_{dc} \cdot L_{brg}^{2} \cdot w_{eff11}}{8} + R_{hz} \cdot \gamma_{dc} \cdot (d_{tot} - y_{lt}) + R_{hz} \cdot \gamma_{dc} \cdot IM \cdot (d_{tot} - y_{st}) = 2565.39 \text{ ft·kip}$$

$$M_r = 3274.67 \text{ ft·kip}$$

$$f_{deckstrIV} := \frac{\gamma_{dc} \cdot L_{brg}^{2} \cdot w_{eff11}}{8 \cdot S_{deckLT} \cdot 3\ n} + \frac{IM \cdot \gamma_{dc} \cdot L_{brg}^{2} \cdot w_{eff11}}{8 \cdot S_{deckST} \cdot n} + \frac{R_{hz} \cdot \gamma_{dc} \cdot (d_{tot} - y_{lt})}{S_{deckLT} \cdot 3 \cdot n} + \frac{R_{hz} \cdot \gamma_{dc} \cdot IM \cdot (d_{tot} - y_{st})}{S_{deckST} \cdot n} = 1.69 \text{ ksi}$$

$F_c = 3.06$ ksi

Note compressive stresses on the decking are conservatively calculated assuming the deck is acting to support it's own self weight, this is obviously not the case as the entire fluid load is carried on the steel girders so actual compressive stresses due to handling will actually be less than this. (please note that the entire fluid load has been applied to the steel non composite section in calculating the compressive stresses in the top flange in previous calculations)

$$f_{decksvc} := \frac{L_{brg}^{2} \cdot w_{eff11}}{8 \cdot S_{deckLT} \cdot 3\ n} + \frac{IM \cdot L_{brg}^{2} \cdot w_{eff11}}{8 \cdot S_{deckST} \cdot n} + \frac{R_{hz} \cdot (d_{tot} - y_{lt})}{S_{deckLT} \cdot 3 \cdot n} + \frac{R_{hz} \cdot IM \cdot (d_{tot} - y_{st})}{S_{deckST} \cdot n} = 1.12 \text{ ksi}$$

$F_{csvc} = 2.4$ ksi

CALDERWOOD ENGINEERING
222 RIVER ROAD
RICHMOND, ME 04357
PH. (207) 737-2007 FAX (207) 737-2008

Vermont Agency of Transportation
RECEIVED
ON: April 18, 2016
and Checked for
CONFORMANCE
BY: SMC/JDG/WDL DATE: 04/26/2016

$$MaxSling := \sqrt{\max(R1, R2)^2 + R_{hz}^2} = 59.08\ kip$$

Use 35T shackles min

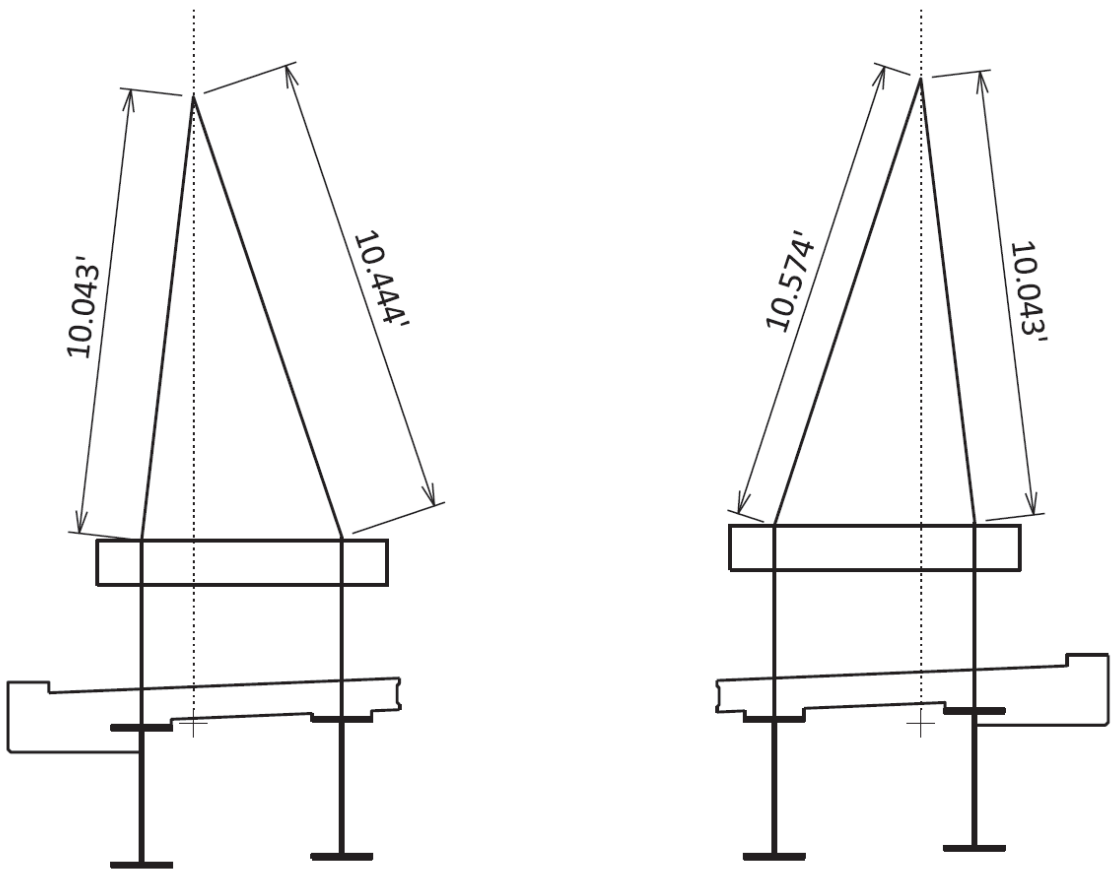

Slings may be equal leg for the PBU #2, for PBU #1 and #3 in order to ensure the pieces fly close to level, ensure that the sling closest to the centerline of the bridge is about 5.5" longer than the sling closest to the fascia, this can be done by adding an extra shackle. Shackles and rigging for the fascia girders to be 35T minimum

$B_{pbu3} = 18.75\ kip$

$C_{pbu3} = 19.49\ kip$

$$MinSling := \sqrt{B_{pbu2}^2 + \left(\frac{B_{pbu2}}{\tan(60\ deg)}\right)^2} = 29.53\ kip$$

All other slings and shackles may be 25T slings

CALDERWOOD ENGINEERING
222 RIVER ROAD
RICHMOND, ME 04357
PH. (207) 737-2007 FAX (207) 737-2008

Vermont Agency of Transportation
RECEIVED
ON: April 18, 2016
and Checked for
CONFORMANCE
BY: SMC/JDG/WDL DATE: 04/26/2016

$Load := \max(R_a, R_b, R_c, R_d) = 51.63\ kip$

$SlingAngle := 60\ deg$

$T_{padeye} := 1.25\ in$

$L_{padeye} := 15\ in$

$H_{padeye} := 10\ in$

$H_{hole} := 5.5\ in$

$L_{weld} := 0.5\ in$

$F_y := 50\ ksi$ *Assuming ASTM A572 grade 50 steel*

$F_u := 65\ ksi$ *Assuming ASTM A572 grade 50 steel*

$F_{uweld} := 70\ ksi$

$Hole_{Dia} := 2.5\ in$

$ShacklePin := 2\ in$ *for 35T Shackles*

$N_{padeyes} := 1$

$IM := 50\%$ *Factor to account for sudden stops and starts made by crane winching and or freefalling for brief periods.*

$EquallyLoaded :=$ "Yes" *If padeyes are not equally loaded modify load applied appropriately to account for the worst case load on any given padeye*

CALDERWOOD ENGINEERING
222 RIVER ROAD
RICHMOND, ME 04357
PH. (207) 737-2007 FAX (207) 737-2008

Vermont Agency of Transportation
RECEIVED
ON: April 18, 2016
and Checked for
CONFORMANCE
BY: SMC/JDG/WDL DATE: 04/26/2016

$$R_{weld} := \sqrt{\frac{L_{weld}^{2}}{2}} = 0.35 \text{ in}$$

$$Load_{HZ} := \frac{(100\% + IM) \cdot Load}{\tan(SlingAngle)\ N_{padeyes}} = 44.71 \text{ kip}$$

$$M_{padeye} := Load_{HZ} \cdot \left(H_{hole} + \frac{Hole_{Dia}}{2} - \frac{ShacklePin}{2}\right) = 257.08 \text{ in}\cdot\text{kip}$$

$$V_{padeye} := \frac{(100\% + IM)\ \sqrt{Load^{2} + Load_{HZ}^{2}}}{N_{padeyes}} = 102.44 \text{ kip}$$

$$v_u := \frac{V_{padeye}}{(H_{padeye} - H_{hole}) \cdot T_{padeye}} = 18.21 \text{ ksi}$$

$$V := min(40\%\ F_y, 30\%\ F_u) = 19.5 \text{ ksi}$$

accounts for block shear with no tension component or straight shear in the padeye whichever is worst, neglects distance to center of hole (holes are much larger for padeyes than standard size holes in connections)

$$L_v := H_{padeye} - H_{hole} = 4.5 \text{ in}$$

For Bearing on hole edge again neglects distance to center of hole (holes are much larger for padeyes than standard size holes in connections)

$$1.5 \cdot ShacklePin = 3 \text{ in}$$

Lv must be greater than 1.5d for the bearing calculations to be correct

$$Brg_{cap} := 1.2 \cdot F_u \cdot T_{padeye} \cdot ShacklePin = 195 \text{ kip}$$

Vermont Agency of Transportation
RECEIVED
ON: April 18, 2016
and Checked for
CONFORMANCE
BY: SMC/JDG/WDL DATE: 04/26/2016

$$I_{weldLeg} := \frac{2 \cdot (L_{padeye} - 1\ in)^3 \cdot L_{weld}}{12} = 228.67\ in^4$$

$$S_{weldLeg} := \frac{I_{weldLeg}}{\frac{(L_{padeye} - 1\ in)}{2}} = 32.67\ in^3$$

$$A_{weldLeg} := 2 \cdot (L_{padeye} - 1\ in) \cdot L_{weld} = 14\ in^2$$

$$f_{vLeg} := \frac{(100\% + IM) \cdot Load}{N_{padeyes} \cdot A_{weldLeg}} = 5.53\ ksi$$

$$f_{vBLeg} := \frac{M_{padeye}}{S_{weldLeg}} = 7.87\ ksi$$

$$f_{Leg} := f_{vLeg} + f_{vBLeg} = 13.4\ ksi$$

$$F_{Leg} := 40\%\ F_y = 20\ ksi$$

CALDERWOOD ENGINEERING
222 RIVER ROAD
RICHMOND, ME 04357
PH. (207) 737-2007 FAX (207) 737-2008

Vermont Agency of Transportation
RECEIVED
ON: April 18, 2016
and Checked for
CONFORMANCE
BY: SMC/JDG/WDL DATE: 04/26/2016

$$I_{weldRoot} := \frac{2 \cdot (L_{padeye} - 1\ in)^3 \cdot R_{weld}}{12} = 161.69\ in^4$$

$$S_{weldRoot} := \frac{I_{weldRoot}}{\frac{(L_{padeye} - 1\ in)}{2}} = 23.1\ in^3$$

$$A_{weldRoot} := 2 \cdot (L_{padeye} - 1\ in) \cdot R_{weld} = 9.9\ in^2$$

$$f_{vRoot} := \frac{(100\% + IM) \cdot Load}{N_{padeyes} \cdot A_{weldRoot}} = 7.82\ ksi$$

$$f_{vBRoot} := \frac{M_{padeye}}{S_{weldRoot}} = 11.13\ ksi$$

$$f_{Root} := f_{vRoot} + f_{vBRoot} = 18.95\ ksi$$

$$F_{Root} := 30\%\ F_{uweld} = 21\ ksi$$

CALDERWOOD ENGINEERING
222 RIVER ROAD
RICHMOND, ME 04357
PH. (207) 737-2007 FAX (207) 737-2008

Vermont Agency of Transportation
RECEIVED
ON: April 18, 2016
and Checked for
CONFORMANCE
BY: SMC/JDG/WDL DATE: 04/26/2016

Check Tie Downs through Web

$TD := IM \cdot Load = 25.81\ kip$

$V_{CR} := 15\ kip$

per Dayton Superior Catalog for 1.25" diameter coil rod safe working loads Product Number B-12 (this has a safety factor of 5, and is for a single shear application - use in double shear will double the capacity

$T26_{Swivel} := 13.5\ kip$

per Dayton Superior Catalog for 1.25" diameter swivel (this has a safety factor of 5, and is for some overstress will be allowed based on the high safety factor and the high estimation of shipping loads (50%)

$D_{threadbar} := 1.25\ in$

$W_{lnth} := 5\ in$

Rebar holes to end of girder - (end of girder to brg stiffener additional length is provided to the centerline of the holes, this will result in additional capacity of the web.

$$v_u := \frac{TD}{(W_{lnth} - 1\ in) \cdot t_w} = 10.33\ ksi$$

$$V := min(40\%\ F_y, 30\%\ F_u) = 19.5\ ksi$$

$$Brg_{cap} := 1.2 \cdot F_u \cdot t_w \cdot D_{threadbar} = 60.94\ kip$$