STATE OF VERMONT
AGENCY OF TRANSPORTATION

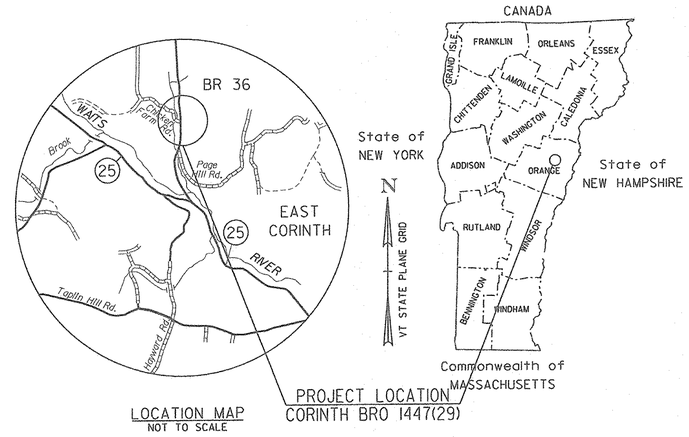

LOCATION MAP
NOT TO SCALE

PROPOSED IMPROVEMENT
BRIDGE PROJECT
TOWN OF CORINTH
COUNTY OF ORANGE
CHICKEN FARM ROAD (T.H.16) CLASS 3 LOCAL ROAD
BRIDGE NO. 36

PROJECT LOCATION: BEGINNING AT A POINT ON (T.H. 16) CHICKEN FARM ROAD APPROXIMATELY 0.065 MILES WEST OF THE INTERSECTION OF (T.H. 16) CHICKEN FARM ROAD AND (T.H. #1) VILLAGE ROAD AND EXTENDING EASTERLY ALONG (T.H. 16) CHICKEN FARM ROAD FOR 0.065 MILES.

PROJECT DESCRIPTION: REPLACEMENT OF EXISTING BRIDGE WITH A PRECAST CONCRETE NEXT BEAM SUPERSTRUCTURE AND CONCRETE SUBSTRUCTURE, WITH ROADWAY APPROACH WIDENING WORK.

LENGTH OF BRIDGE: 65.20 FEET = 0.012 MILES
LENGTH OF ROADWAY: 277.74 FEET = 0.053 MILES
LENGTH OF PROJECT: 342.94 FEET = 0.065 MILES

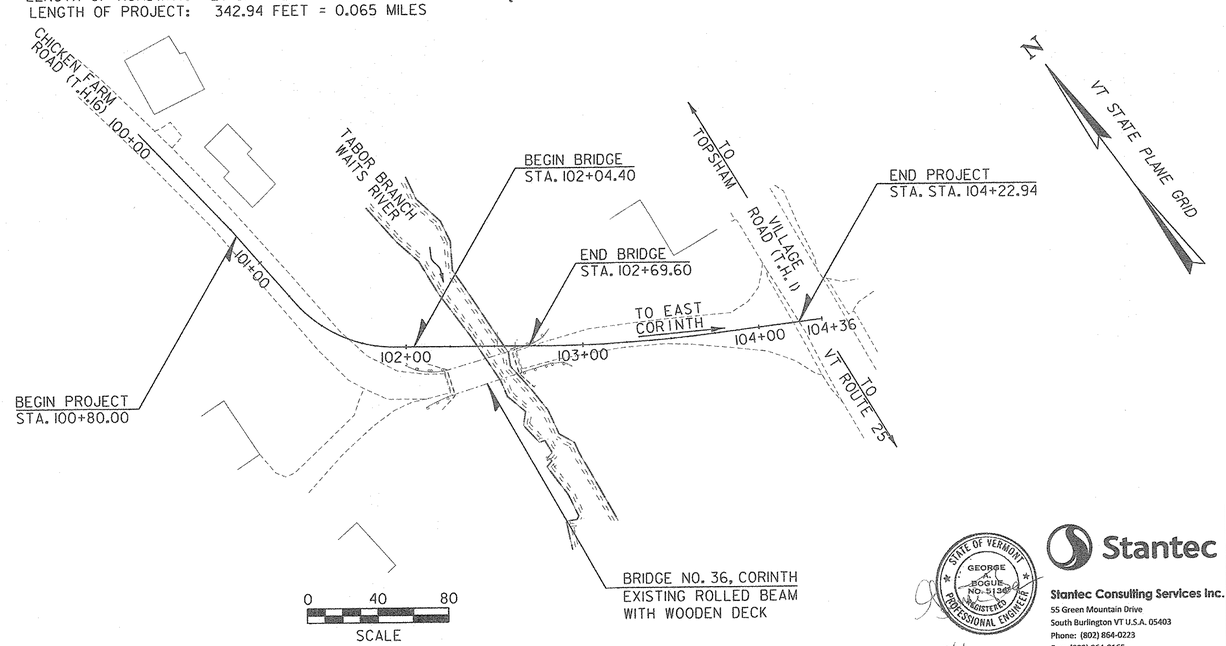

CONSTRUCTION IS TO BE CARRIED ON IN ACCORDANCE WITH THESE PLANS AND THE STANDARD SPECIFICATIONS FOR CONSTRUCTION DATED 2011, AS APPROVED BY THE FEDERAL HIGHWAY ADMINISTRATION ON JULY 20, 2011 FOR USE ON THIS PROJECT, INCLUDING ALL SUBSEQUENT REVISIONS AND SUCH REVISED SPECIFICATIONS AND SPECIAL PROVISIONS AS ARE INCORPORATED IN THESE PLANS.

QUALITY ASSURANCE PROGRAM : LEVEL 2

SURVEYED BY : VSE
SURVEYED DATE : 11/05/2012

DATUM
VERTICAL NAVD 88
HORIZONTAL NAD 83 (2011)

STATE OF VERMONT
GEORGE A. BOGUE
NO. 5138
REGISTERED
PROFESSIONAL ENGINEER
8/1/14

Stantec
Stantec Consulting Services Inc.
55 Green Mountain Drive
South Burlington VT U.S.A. 05403
Phone: (802) 864-0223
Fax: (802) 864-0165
www.stantec.com

DIRECTOR OF PROJECT DELIVERY
APPROVED [signature] DATE 8/5/2014

PROJECT MANAGER : DANNY LANDRY

PROJECT NAME : CORINTH
PROJECT NUMBER : BRO 1447 (29)

SHEET 1 OF 57 SHEETS

STATE OF VERMONT
AGENCY OF TRANSPORTATION

PRELIMINARY INFORMATION SHEET (BRIDGE)

Version 11.06.15

LRFD

INDEX OF SHEETS

PLAN SHEETS

1	TITLE SHEET
2	PRELIMINARY INFORMATION SHEET
3	TYPICAL SECTIONS - TYP 1
4	TYPICAL SECTIONS - TYP 2
5	PROJECT NOTES
6 - 8	QUANTITY SHEETS
9	CONVENTIONAL SYMBOLOGY LEGEND
10	TIE SHEET
11	PLAN LAYOUT SHEET - PL 1
12	DRAINAGE DETAIL SHEET - DDS 1
13	PROFILE SHEET - PRO 1
14	TRAFFIC CONTROL SHEET - TCS 1
15	DETOUR PROFILE SHEET - TPS 1
16	UTILITY LAYOUT SHEET - UTL 1
17	TRAFFIC SIGNS AND LINES LAYOUT - TSL 1
18	TRAFFIC SIGN SUMMARY SHEET - TSS1
19	BORING INFORMATION SHEET
20 - 22	BORING LOG 1-3
23	PLAN AND ELEVATION
24	FRAMING PLAN
25	NEXT BEAM DETAILS 1
26	NEXT BEAM DETAILS 2
27	CURTAIN WALL DETAILS 1
28	CURTAIN WALL DETAILS 2
29	BEARING DETAILS
30	ABUTMENT 1 MASONRY 1
31	ABUTMENT 1 MASONRY 2
32	ABUTMENT 1 FOOTING REINFORCEMENT 1
33	ABUTMENT 1 FOOTING REINFORCEMENT 2
34	ABUTMENT 1 & WW 1 REINFORCEMENT
35	ABUTMENT 2 MASONRY
36	ABUTMENT 2 FOOTING REINFORCEMENT
37	ABUTMENT 2 REINFORCEMENT
38	WINGWALL 2, 3 & 4 REINFORCEMENT
39	ABUTMENT & WINGWALL SECTIONS
40	BRIDGE RAIL DETAILS 1
41	APPROACH RAIL DETAILS
42	REINFORCING STEEL SCHEDULE
43 - 47	ROADWAY CROSS SECTIONS - RXS 1-5
48 - 50	CHANNEL CROSS SECTIONS - CXS 1-3
51	EPSC NARRATIVE SHEET - ECN 1
52	EPSC CONSTRUCTION SITE PLAN - ECP 1
53 - 55	EPSC DETAIL SHEET - ECD 1-3
56	R.O.W. DETAIL SHEET #1
57	ROW LAYOUT SHEET 1 OF 1

STANDARDS LIST

B-71	STANDARD FOR RESIDENTIAL AND COMMERCIAL DRIVES	07-08-2005
C-10	CURBING	02-11-2008
D-1	PRECAST REINFORCED CONCRETE DROP INLET DETAILS	06-01-1994
D-3	TREATED GUTTERS	06-01-1994
D-9	REINFORCED CONCRETE DROP INLET WITH VERTICAL CURB & THROAT ADAPTER	06-01-1994
D-11	STEEL OR IRON GRATES & COVERS (TYPE A)	06-01-1994
E-120	STANDARD SIGN PLACEMENT - EXPRESSWAY & FREEWAY	08-08-1995
E-121	STANDARD SIGN PLACEMENT - CONVENTIONAL ROAD	08-08-1995
E-140	REGULATORY SIGN DETAILS	08-30-1996
E-171A	TRAFFIC CONTROL SIGNALS GENERAL NOTES AND DETAILS	08-09-1995
E-172	VEHICLE DETECTOR LOOP DETAILS	08-09-1995
E-193	PAVEMENT MARKING DETAILS	08-18-1995
G-1B	BOX BEAM GUARD RAIL	06-01-1994
J-3	MAIL BOX SUPPORT DETAILS	08-07-1995
S-352A	BRIDGE RAILING, GALVANIZED STEEL TUBING/CONC. COMBINATION	08-22-2012
S-352B	BRIDGE RAILING, GALVANIZED STEEL TUBING/CONC. COMBINATION	08-22-2012
S-352C	BRIDGE RAILING, GALVANIZED STEEL TUBING/CONC. COMBINATION	08-22-2012
T-1	TRAFFIC CONTROL GENERAL NOTES	08-06-2012
T-10	CONVENTIONAL ROADS AND CONSTRUCTION APPROACH SIGNING	08-06-2012
T-28	CONSTRUCTION SIGN DETAILS	08-06-2012
T-30	CONSTRUCTION SIGN DETAILS	08-06-2012
T-35	CONSTRUCTION ZONE LONGITUDINAL DROP-OFFS	08-06-2012
T-36	CONSTRUCTION ZONE LONGITUDINAL DROP-OFFS FOR PAVING	08-06-2012
T-42	BRIDGE NUMBER PLAQUE	04-09-2014
T-45	SQUARE TUBE SIGN POST AND ANCHOR	01-02-2013

STRUCTURE DETAIL SHEETS

SD-501.00	CONCRETE DETAILS AND NOTES	02-09-2012
SD-502.00	CONCRETE DETAILS AND NOTES	10-10-2012
SD-516.10	BRIDGE JOINT ASPHALTIC PLUG	08-29-2011

FINAL HYDRAULIC REPORT

HYDROLOGIC DATA

Date: February 2014

DRAINAGE AREA : 29.04 sq. mi.
CHARACTER OF TERRAIN : Hilly to mountainous
STREAM CHARACTERISTICS : Perennial, flashy, sinuous
NATURE OF STREAMBED : Gravel, cobbles, small boulders, ledge

PEAK FLOW DATA

Q 2.33 =	900 cfs	Q 50 =	2875 cfs
Q 10 =	1825 cfs	Q 100 =	3300 cfs
Q 25 =	2350 cfs	Q 500 =	4620 cfs

DATE OF FLOOD OF RECORD : November 1927
ESTIMATED DISCHARGE: unknown
WATER SURFACE ELEV.: unknown
NATURAL STREAM VELOCITY : @ Q25 = 8.3 cfs
ICE CONDITIONS : moderate
DEBRIS: moderate
DOES THE STREAM REACH MAXIMUM HIGHWATER ELEV. RAPIDLY? yes
IS ORDINARY RISE RAPID? yes
IS STAGE AFFECTED BY UPSTREAM OR DOWNSTREAM CONDITIONS? no
IF YES, DESCRIBE:

WATERSHED STORAGE: <1%
HEADWATERS:
UNIFORM: X
IMMEDIATELY ABOVE SITE:

EXISTING STRUCTURE INFORMATION

STRUCTURE TYPE: Rolled beam with wooden deck
YEAR BUILT: 1912
CLEAR SPAN(NORMAL TO STREAM): 37'
VERTICAL CLEARANCE ABOVE STREAMBED: 16'
WATERWAY OF FULL OPENING: 500 sq. ft.
DISPOSITION OF STRUCTURE: Remove and replace
TYPE OF MATERIAL UNDER SUBSTRUCTURE: Ledge

WATER SURFACE ELEVATIONS AT:

Q2.33 =	690.1'	VELOCITY =	8.2 fps
Q10 =	693.0'	"	9.5 fps
Q25 =	694.4'	"	10.5 fps
Q50 =	695.7'	"	11.1 fps
Q100 =	696.7'	"	11.7 fps

LONG TERM STREAMBED CHANGES: Minimal due to ledge

IS THE ROADWAY OVERTOPPED BELOW Q100: no
FREQUENCY: N/A
RELIEF ELEVATION: 703.6'
DISCHARGE OVER ROAD @Q100: None

UPSTREAM STRUCTURE

TOWN:	Topsham	DISTANCE:	3435'
HIGHWAY # :	TH 65	STRUCTURE #:	BR 12
CLEAR SPAN:	32'	CLEAR HEIGHT:	7'
YEAR BUILT:	1963	FULL WATERWAY:	220 sq. ft.
STRUCTURE TYPE:	Prestress Concrete		

DOWNSTREAM STRUCTURE

TOWN:	Corinth	DISTANCE:	1410'
HIGHWAY # :	TH 1	STRUCTURE #:	BR 8
CLEAR SPAN:	31'	CLEAR HEIGHT:	12'
YEAR BUILT:	1934	FULL WATERWAY:	370 sq. ft.
STRUCTURE TYPE:	Concrete T-beam		

PROPOSED STRUCTURE

STRUCTURE TYPE: NEXT beam bridge

CLEAR SPAN(NORMAL TO STREAM): 46'
VERTICAL CLEARANCE ABOVE STREAMBED: ~17'
WATERWAY OF FULL OPENING: 720 sq. ft.

WATER SURFACE ELEVATIONS AT:

Q2.33 =	688.8'	VELOCITY=	9.0 fps
Q10 =	691.2'	"	10.7 fps
Q25 =	692.3'	"	11.9 fps
Q50 =	693.3'	"	13.0 fps
Q100 =	694.1'	"	13.7 fps

IS THE ROADWAY OVERTOPPED BELOW Q100: no
FREQUENCY: N/A
RELIEF ELEVATION: 703.4'
DISCHARGE OVER ROAD @Q100: None

AVERAGE LOW ELEVATION OF SUPERSTRUCTURE: 701.2'
VERTICAL CLEARANCE: @ Q25 = 8.9'

SCOUR: Abutments will be founded on ledge and streambed is mostly ledge, so scour is not a concern.
REQUIRED CHANNEL PROTECTION: N/A

PERMIT INFORMATION

		DEPTH OR ELEVATION:
AVERAGE DAILY FLOW:	60 cfs	
ORDINARY LOW WATER:	30 cfs	683.2'
ORDINARY HIGH WATER:	390 cfs	688.0'

TEMPORARY BRIDGE REQUIREMENTS

STRUCTURE TYPE: Bridge - to be removed before winter
CLEAR SPAN (NORMAL TO STREAM): 45' minumum'
VERTICAL CLEARANCE ABOVE STREAMBED: Minimum elevation 696.0'
WATERWAY AREA OF FULL OPENING: 480 sq. ft.

ADDITIONAL INFORMATION

TRAFFIC MAINTENANCE NOTES

1. MAINTAIN ONE-WAY TRAFFIC ON A TEMPORARY BRIDGE.
2. INSTALL AND MAINTAIN TRAFFIC SIGNALS.
3. SIDEWALKS ARE NOT NECESSARY
4. THE APPROACHES FOR THE TEMPORARY BRIDGE SHALL BE PAVED.

DESIGN VALUES

1. DESIGN LIVE LOAD		HL-93
2. FUTURE PAVEMENT	d_p:	- - -
3. DESIGN SPAN	L:	60.00 FT
4. MIN. MID-SPAN POS. CAMBER @ RELEASE (PRESTRESSED UNITS)	Δ:	- - -
5. PRESTRESSING STRAND (0.60 INCH DIAMETER - LOW RELAX)	f_y:	270 KSI
6. PRESTRESSED CONCRETE STRENGTH	f'_c:	7.0 KSI
7. PRESTRESSED CONCRETE RELEASE STRENGTH	f'_{ci}:	5.5 KSI
8. CONCRETE, HIGH PERFORMANCE CLASS AA	f'_c:	- - -
9. CONCRETE, HIGH PERFORMANCE CLASS A	f'_c:	- - -
10. CONCRETE, HIGH PERFORMANCE CLASS B	f'_c:	3.5 KSI
11. CONCRETE, CLASS C	f'_c:	- - -
12. REINFORCING STEEL	f_y:	60 KSI
13. STRUCTURAL STEEL AASHTO M270	f_y:	- - -
14. SOIL UNIT WEIGHT	γ:	0.140 KCF
15. NOMINAL BEARING RESISTANCE OF SOIL	q_n:	3.0 KSF
16. SOIL BEARING RESISTANCE FACTOR (REFER TO AASHTO LRFD)	ϕ:	0.45
17. NOMINAL BEARING RESISTANCE OF ROCK	q_n:	10.0 KSF
18. ROCK BEARING RESISTANCE FACTOR (REFER TO AASHTO LRFD)	ϕ:	0.45
19. NOMINAL AXIAL PILE RESISTANCE	q_p:	- - -
20. PILE YIELD STRENGTH ASTM A572	f_y:	- - -
21. PILE SIZE		- - -
22. EST. PILE LENGTH	L_p:	
23. PILE RESISTANCE FACTOR	ϕ:	- - -
24. LATERAL PILE DEFLECTION	Δ:	- - -
25. BASIC WIND SPEED	V_{3s}:	- - -
26. MINIMUM GROUND SNOW LOAD	p_g:	- - -
27. SEISMIC DATA — PGA: - - -	S_s:	- - -
	S_1:	- - -

LRFR LOAD RATING FACTORS

LOADING LEVELS	TRUCK						
	H-20	HL-93	3S2	6 AXLE	3A. STR.	4A. STR.	5A. SEMI
TONNAGE	20	36	36	66	30	34.5	38
INVENTORY	1.88	1.01					
POSTING							
OPERATING	2.44	1.31	2.2	1.35	1.74	1.57	1.79
COMMENTS:							

AS BUILT "REBAR" DETAIL

LEVEL I	LEVEL II	LEVEL III
TYPE:	TYPE:	TYPE:
GRADE:	GRADE:	GRADE:

TEMPORARY BRIDGE PROFILE ALONG TEMP CL

BOTTOM OF BEAMS ELEV. = 696.00 FT

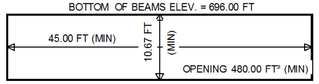

TRAFFIC DATA

YEAR	ADT	DHV	% D	% T	ADTT
2014	60	20	55	9.2	5
2034	60	20	55	10.7	5

20 year ESAL for flexible pavement from 2014 to 2024 : 5,000
40 year ESAL for flexible pavement from 2014 to 2034 : 10,000
Design Speed : 15 mph

PROJECT NAME: **CORINTH**
PROJECT NUMBER: **BRO 1447(29)**

FILE NAME:	z01j292_pi.xls	PLOT DATE:	7/9/2014
PROJECT LEADER:	G. BOGUE	DRAWN BY:	J. SOTER
DESIGNED BY:	M. CHENETTE	CHECKED BY:	G. BOGUE
PRELIMINARY INFORMATION SHEET		SHEET 2	OF 57

8/14/2014 12:29:29 PM Y:\691\53\01\691\9530\691\transportation\drawing\z0j0292_pi.dgn

NOTES:

1. ALL STEEL COMPONENTS FOR BRIDGE RAIL AND BOX BEAM GUARDRAIL SHALL BE COATED BLACK IN ACCORDANCE WITH ASTM D7803 FOLLOWING GALVANIZING.
2. FOR PG BINDER REQUIREMENTS, SEE SPECIAL PROVISIONS FOR CONTRACT ITEM 900.680.

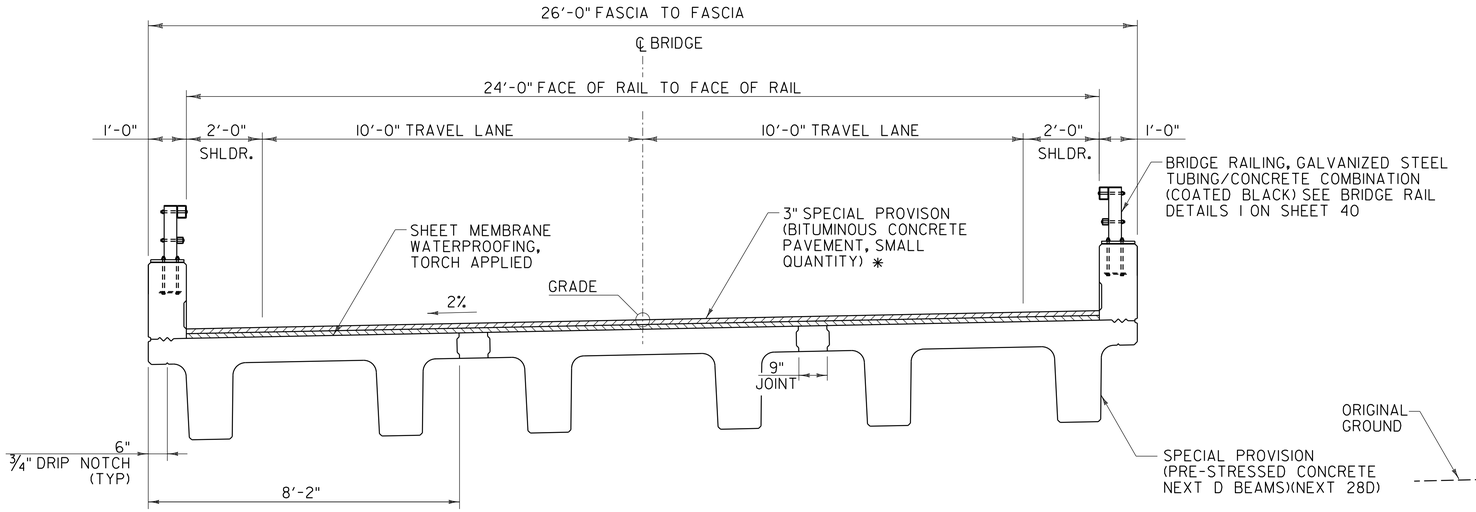

*3" TYPE IVS (TWO 1 1/2" LIFTS)

TYPICAL BRIDGE SECTION

SCALE: 1/2" = 1'-0"

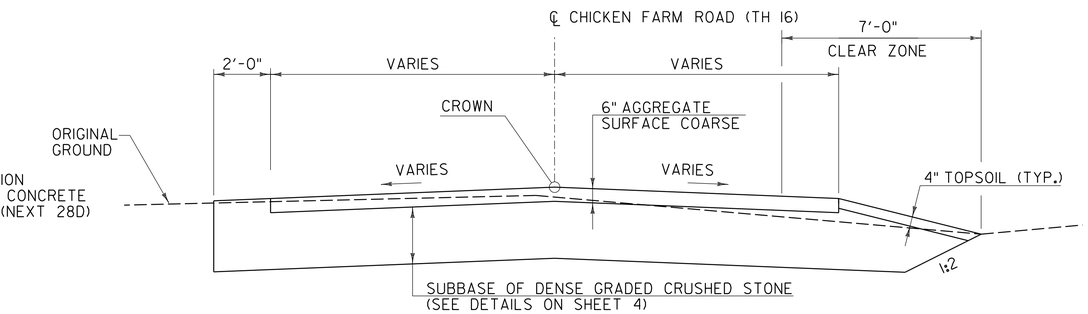

ROADWAY APPROACH SECTION (GRAVEL)

SCALE: 3/8"=1'-0"

STA. 100+30.00 - STA. 100+80.00

MATERIAL TOLERANCES
(IF USED ON PROJECT)

SURFACE	
- PAVEMENT (TOTAL THICKNESS)	+/- 1/4"
- AGGREGATE SURFACE COARSE	+/- 1/2"
SUBBASE	+/- 1"
SAND BORROW	+/- 1"

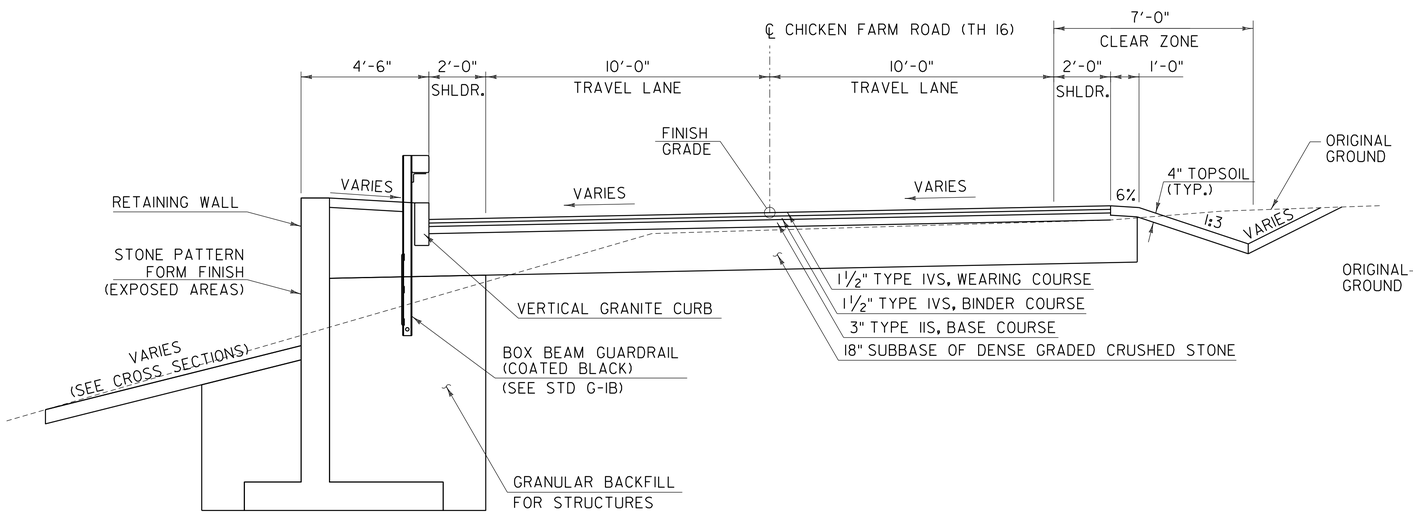

TYPICAL ROADWAY SECTION (PAVED)

SCALE: 3/8"=1'-0"

STA. 100+80.00 - STA. 102+04.40
STA. 102+69.60 - STA. 104+22.94

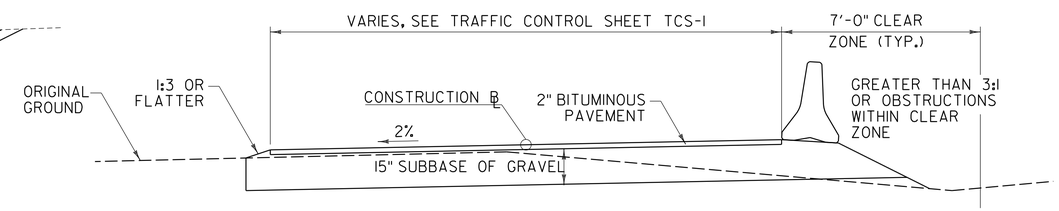

TYPICAL TEMPORARY DETOUR SECTION

SCALE: 3/8"=1'-0"

PROJECT NAME: CORINTH	
PROJECT NUMBER: BRO 1447(29)	
FILE NAME: ...\drawing\z01j292_typ.dgn	PLOT DATE: 8/4/2014
PROJECT LEADER: G. BOGUE	DRAWN BY: E. ALLING
DESIGNED BY: M. CHENETTE	CHECKED BY: G. BOGUE
TYPICAL SECTIONS - TYP 1	SHEET 3 OF 57

Stantec

8/4/2014 12:11:45 PM V:\1953\active\195310795\transportation\drawing\z01j292_typ.dgn

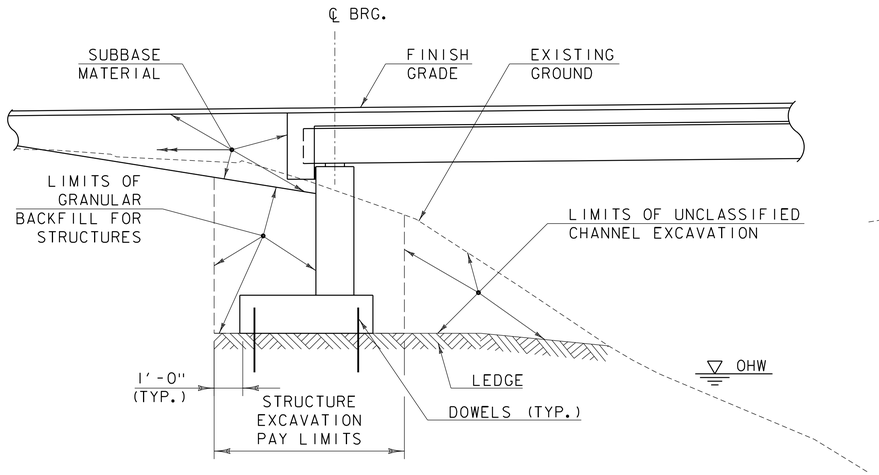

TYPICAL ABUTMENT EARTHWORK SECTION

(NOT TO SCALE)

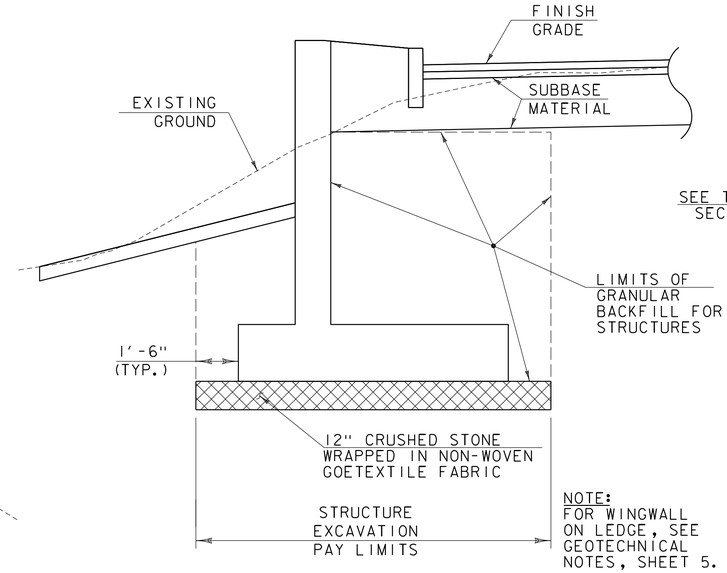

NOTE:
FOR WINGWALL ON LEDGE, SEE GEOTECHNICAL NOTES, SHEET 5.

TYPICAL WINGWALL EARTHWORK SECTION ON SOIL

(NOT TO SCALE)

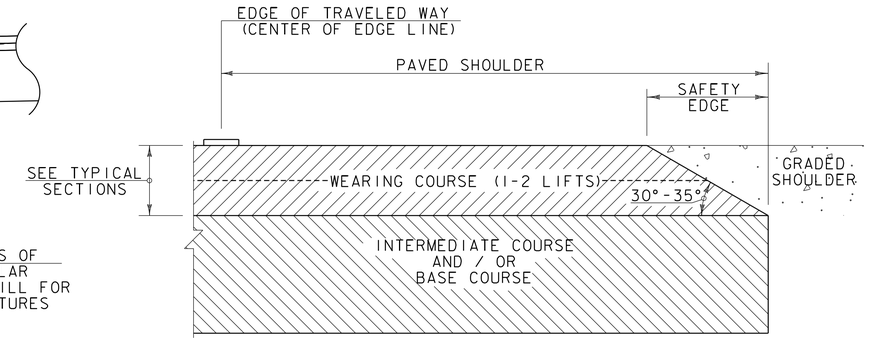

SAFETY EDGE DETAIL

NOT TO SCALE

NOTES:

1. THE EDGE OF PAVEMENT SHALL BE FORMED IN SUCH A WAY THAT THE BITUMINOUS CONCRETE PAVEMENT IS EXTRUDED OR COMPRESSED TO FORM THE 30 TO 35 DEGREE ANGLE. DEVICES THAT SIMPLY STRIKE-OFF THE MIX WITHOUT PROVIDING ANY COMPACTIVE EFFORT WILL NOT BE ALLOWED.

2. THE PAVED SHOULDER EXTENDS FROM THE EDGE OF TRAVELED WAY TO THE EDGE OF THE WEARING COURSE, INCLUDING THE "SAFETY EDGE".

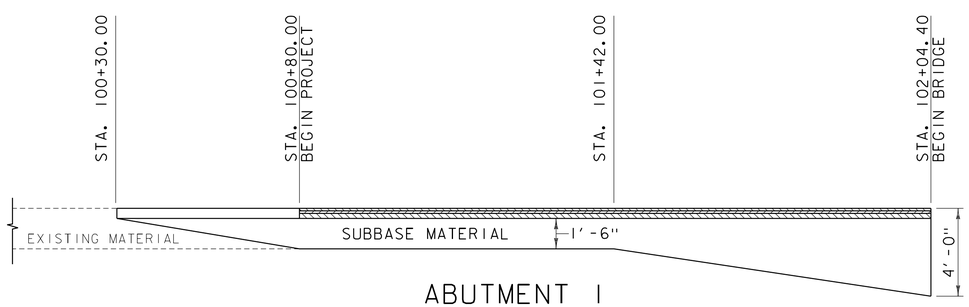

ABUTMENT 1 SUBBASE DETAIL

(ELEVATION IN CUT AND FILL)
(NOT TO SCALE)

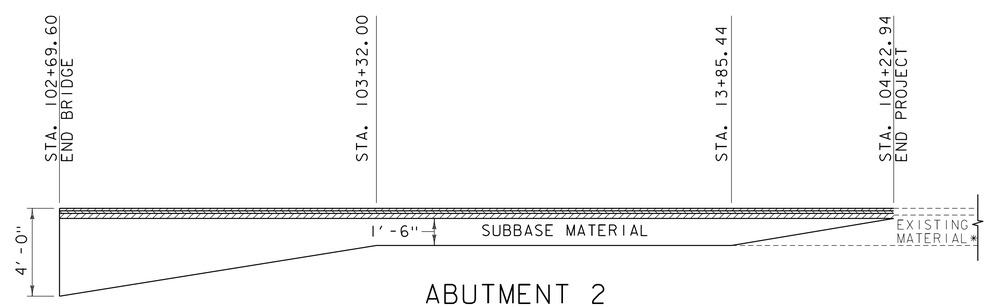

ABUTMENT 2 SUBBASE DETAIL

(ELEVATION IN CUT AND FILL)
(NOT TO SCALE)

* THICKNESSES OF EXISTING PAVEMENT AND SUBBASE NOT KNOWN.

Stantec

PROJECT NAME: CORINTH	
PROJECT NUMBER: BRO 1447(29)	
FILE NAME: ...\drawing\z01j292_typ.dgn	PLOT DATE: 8/26/2014
PROJECT LEADER: G. BOGUE	DRAWN BY: E. ALLING
DESIGNED BY: M. CHENETTE	CHECKED BY: G. BOGUE
TYPICAL SECTIONS - TYP 2	SHEET 4 OF 57

8/26/2014 11:40:56 AM V:\1953\active\195310795\transportation\drawing\z01j292_typ.dgn

GENERAL PROJECT NOTES

1. ALL MATERIALS AND CONSTRUCTION SHALL CONFORM TO STATE OF VERMONT, AGENCY OF TRANSPORTATION STANDARD SPECIFICATIONS FOR CONSTRUCTION 2011, AND ITS LATEST REVISIONS, AND THE AASHTO LRFD BRIDGE DESIGN SPECIFICATIONS, FIFTH EDITION DATED 2010, AND ITS LATEST REVISIONS AND PCI NORTHEAST'S NEXT D BEAM STANDARDS DATED JANUARY 2010.

2. THE BRIDGE IS DESIGNED FOR AN HL-93 LIVE LOAD.

3. REMOVAL OF ANY PORTION OF THE EXISTING SUBSTRUCTURE ENCOUNTERED WITHIN THE LIMITS OF STRUCTURE EXCAVATION OR UNCLASSIFIED CHANNEL EXCAVATION SHALL BE CONSIDERED INCIDENTAL TO THOSE ITEMS.

4. ALL DIMENSIONS SHOWN IN THE PLANS ARE HORIZONTAL OR VERTICAL AT 68 DEGREES FAHRENHEIT, UNLESS NOTED OTHERWISE.

5. ALL CONSTRUCTION AND ACCESS SHALL BE WITHIN THE RIGHT OF WAY UNLESS SHOWN ON THE ROW PLANS OR APPROVED IN WRITING BY THE PROPERTY OWNER AND VTRANS ENVIRONMENTAL PERMITTING. THE CONTRACTOR SHALL COORDINATE DIRECTLY WITH THE PROPERTY OWNER(S) TO OBTAIN WRITTEN APPROVAL OF LAND USE OUTSIDE THE RIGHT OF WAY. THE CONTRACTOR SHALL SUBMIT COPIES OF THE WRITTEN PROPERTY AGREEMENTS TO THE RESIDENT ENGINEER.

6. TEMPORARY BRIDGE APPROACHES SHALL BE REMOVED AFTER CONSTRUCTION OF BRIDGE NO. 36 AND THE AREA DISTURBED SHALL BE RE-GRADED AND RE-VEGETATED. PAYMENT FOR REMOVAL OF TEMPORARY BRIDGE APPROACHES AND RE-VEGETATION SHALL BE INCLUDED IN THE UNIT PRICE BID FOR ITEM 528.10.

CONCRETE AND REINFORCING STEEL

7. ALL EXPOSED EDGES OF CONCRETE SHALL BE CHAMFERED 1 INCH.

8. JOINTS AND SCORE MARKS IN CONCRETE SHALL BE CONSTRUCTED AS INDICATED ON THE PLANS OR AS DIRECTED BY THE ENGINEER.

9. REINFORCING PLACEMENT TOLERANCES SHALL BE:
SPACING 1 INCH
CLEARANCE +/- 1/4 INCH

10. ITEM 514.10 WATER REPELLENT, SILANE SHALL BE APPLIED TO ALL EXPOSED CONCRETE SURFACES EXCEPT THE UNDERSIDE OF DECK BETWEEN DRIP BEADS.

11. ALL MILD STEEL REINFORCEMENT IN THE SUPERSTRUCTURE (INCLUDING BRIDGE RAILING AND CURTAIN WALLS) SHALL PROVIDE LEVEL II CORROSION RESISTANCE. LEVEL I CORROSION RESISTANCE IS ACCEPTABLE FOR THE SUBSTRUCTURE. PAYMENT FOR STEEL REINFORCEMENT IN BRIDGE RAILING WILL BE INCLUDED IN THE UNIT PRICE BID FOR CONTRACT ITEM 525.45. PAYMENT FOR ALL OTHER STEEL REINFORCEMENT IN SUPERSTRUCTURE WILL BE INCLUDED IN THE UNIT PRICE BID FOR CONTRACT ITEM 900.640. PAYMENT FOR STEEL REINFORCEMENT IN SUBSTRUCTURE CONCRETE WILL BE PAID UNDER CONTRACT ITEM 507.11.

12. CONCRETE FOR THE SUBSTRUCTURE SHALL BE HIGH PERFORMANCE CLASS B AND WILL BE PAID FOR UNDER ITEM 501.34, CONCRETE, HIGH PERFORMANCE CLASS B UNLESS OTHERWISE NOTED.

13. SURFACES OF BRIDGE SEATS UNDER BEARING DEVICES SHALL BE LEVEL. OTHER BRIDGE SEAT AREAS SHALL BE SLOPED 1/4 INCH PER FOOT. THE ABUTMENT SEATS SHALL BE SLOPED FULL WIDTH TOWARD MIDSPAN. THE ENTIRE BRIDGE SEAT SURFACE SHALL BE GIVEN A MAGNESIUM FLOAT FINISH.

14. NO CONCRETE SHALL BE PLACED IN THE ABUTMENTS OR WINGWALLS ABOVE THE ADJACENT BEAM SEAT ELEVATIONS UNTIL THE BEAMS HAVE BEEN SET.

15. ALL REINFORCING STEEL SHALL BE DETAILED AND FABRICATED USING PROCEDURES AND TOLERANCES IN ACCORDANCE WITH APPLICABLE PUBLICATIONS OF THE CONCRETE REINFORCING STEEL INSTITUTE.

16. MINIMUM COVER FOR REINFORCING STEEL IN THE ABUTMENTS AND WINGWALLS SHALL BE 3 INCHES UNLESS DETAILED OTHERWISE.

17. ALL EXPOSED VERTICAL FACES OF THE WINGWALLS SHALL BE FORMED WITH A "RIVER ROCK" TYPE FORM LINER PATTERN AND SHALL EXTEND ONE FOOT BELOW GRADE LINES. THE STONE PATTERN SHALL BE STAINED IN NATURAL COLORS USING CONCRETE ACID COLOR STAINS. THE FORM LINER SYSTEM AND STAIN COLORS SHALL BE DEMONSTRATED TO THE RESIDENT ENGINEER FOR APPROVAL IN A SAMPLE POUR, PRIOR TO CASTING THE ACTUAL SUBSTRUCTURE COMPONENTS. ALL COSTS ASSOCIATED WITH THE CONCRETE FORM LINER , COLOR STAINING, AND TEST POUR WILL BE CONSIDERED INCIDENTAL TO ITEM 501.34, CONCRETE, HIGH PERFORMANCE CLASS B.

NEXT D BEAMS

18. NEXT D BEAMS ARE A NON-PROPRIETARY SHAPE DEVELOPED BY PCI NORTHEAST (PCINE). STANDARDIZED SECTION PROPERTIES AND DETAILS MAY BE FOUND AT HTTP://PCINE.ORG.

19. DESIGN VALUES
    A. CONCRETE COMPRESSIVE STRENGTH f'c = 7000 PSI
    B. CONCRETE COMPRESSIVE STRENGTH AT RELEASE f'CI = 5500 PSI
    C. PRE-STRESSING STRANDS: 0.6 INCH DIAMETER, 270 KSI, LOW-RELAXATION 7-WIRE STRANDS
    D. ASSUMED MODULUS OF ELASTICITY IS 28,500 KSI
    E. JACKING FORCE PER STRAND = 44 KIPS
    F. SERVICE LOADS

MEMBER MOMENT		637.0	K-FT (PER MEMBER)
SUPERIMPOSED DEADLOAD MOMENT	244.0	K-FT (PER MEMBER)	
LIVE LOAD AND IMPACT MOMENT		1056.2	K-FT (PER MEMBER)
DEAD LOAD REACTION		58.8	KIPS (PER MEMBER)
LIVE LOAD AND IMPACT REACTION		94.0	KIPS (PER MEMBER)
TOTAL REACTION	152.8	KIPS (PER MEMBER)	
FINAL CAMBER		3	INCHES

20. THE CURTAIN WALLS MAY BE CAST ONTO THE ENDS OF THE NEXT BEAMS BY THE FABRICATOR OR CAST-IN-PLACE. THE CONCRETE SHALL MEET THE REQUIREMENTS OF SECTION 540. PAYMENT FOR THE CURTAIN WALLS SHALL BE INCLUDED IN ITEM 900.640 "SPECIAL PROVISION (PRE-STRESSED CONCRETE NEXT D BEAMS) (NEXT 28D)." IF THE CURTAIN WALLS ARE CAST-IN-PLACE THE CONTRACTOR SHALL SUBMIT DETAILED FABRICATION DRAWINGS SHOWING SEQUENCE OF CONSTRUCTION, LIMIT OF CONCRETE PLACEMENT AND REINFORCING DETAILS FOR APPROVAL.

21. A RETARDING ADMIXTURE MAY BE PLACED ON THE FORMS FOR THE FLANGE KEYWAYS WHERE THE ENDS OF FLANGES ARE IN CONTACT WITH GROUT. THE FORMS FOR THE FLANGE ENDS SHALL THEN BE STRIPPED AND THE FLANGE ENDS POWER WASHED WITH WATER TO EXPOSE THE AGGREGATE DURING FABRICATION OF THE BEAMS. THE FLANGE ENDS SHALL BE POWER WASHED WITH WATER AGAIN PRIOR TO ERECTION OF THE BEAMS. THIS WORK WILL BE CONSIDERED INCIDENTAL TO ITEM 900.640 SPECIAL PROVISION (PRESTRESSED CONCRETE NEXT D BEAMS)(NEXT 28D).

22. FILLING FLANGE CONNECTION WILL BE PAID UNDER TIEM 900.608 SPECIAL PROVISION (HIGH PERFORMANCE CONCRETE, RAPID SET)(FPQ).

23. GROUT AND CURE THE FLANGE CONNECTION BETWEEN BEAMS PRIOR TO CASTING THE BRIDGE RAIL. THE DESIGN OF THE NEXT BEAMS IS BASED ON THE FLANGES BEING FULLY CONNECTED PRIOR TO CONSTRUCTION OF THE RAIL.

24. METHOD OF FORMING FLANGE CONNECTION SHALL BE DETERMINED BY THE CONTRACTOR. THE FORMS SHALL BE REMOVABLE AND ABLE TO ACCOMMODATE DIFFERENTIAL CAMBER. FORM SUPPORTS SHALL NOT PENETRATE THROUGH THE TOP OF THE POUR UNLESS APPROVED BY THE ENGINEER. FIELD DRILLING INTO THE NEXT BEAMS WILL NOT BE ALLOWED.

25. THE FABRICATOR MAY ALTER THE DESIGN AS DETAILED IN THESE PLANS TO ACCOMMODATE THEIR SPECIFIC OPERATION. ANY ALTERATIONS MUST BE DETAILED AND DESIGNED BY A PROFESSIONAL ENGINEER AND SUBMITTED AS FABRICATION DRAWINGS IN ACCORDANCE WITH THE CONTRACT DOCUMENTS.

GEOTECHNICAL

26. THE TOP OF THE FOOTING ELEVATION WAS SET BASED ON THE LOWEST ANTICIPATED LEDGE ELEVATION DETERMINED FROM THE BORINGS. LEDGE ELEVATIONS MAY VARY AND ADJUSTMENTS IN BOTTOM OF FOOTING ELEVATION AND GEOMETRY ARE EXPECTED.

27. IN AREAS WHERE THE FOOTINGS WILL BEAR ON BEDROCK ALL SOIL, WEATHERED ROCK AND FRACTURED ROCK SHALL BE REMOVED FROM THE BEDROCK SURFACE PRIOR TO PLACING CONCRETE FOR THE FOOTING.

28. UPON COMPLETION OF THE EXCAVATION FOR SUBSTRUCTURES FOUNDED ON BEDROCK AND PRIOR TO PLACING FORMWORK, THE ENGINEER SHALL NOTIFY THE PROJECT MANAGER AND THE VTRANS STATE GEOLOGIST. THE GEOLOGIST WILL DETERMINE IF THE BEDROCK IS COMPETENT TO OBTAIN THE NOMINAL BEARING RESISTANCE AS SHOWN ON THE PLANS. THE CONTRACTOR SHALL NOTIFY THE GEOLOGIST 72 HOURS IN ADVANCE WHEN THE ANALYSIS WILL BE NEEDED.

29. AT THE FOOTING SUBGRADE THE SLOPE OF THE BEDROCK SURFACE SHALL BE FLATTER THAN 6 HORIZONTAL TO 1 VERTICAL. WHERE THE BEDROCK SURFACE EXCEEDS A SLOPE OF 6 HORIZONTAL TO 1 VERTICAL THE BEDROCK SURFACE SHALL BE BENCHED TO CREATE STEPS OR EXCAVATED COMPLETELY TO A SLOPE FLATTER THAN 6 HORIZONTAL TO 1 VERTICAL.

30. A MAXIMUM OF 6" OVER BREAKAGE WILL BE REPLACED WITH "HIGH PERFORMANCE CLASS B CONCRETE. OVER BREAKAGE BEYOND 6" SHALL BE REPLACED WITH "HIGH PERFORMANCE CLASS B CONCRETE" AT THE EXPENSE OF THE CONTRACTOR.

31. THE LIMITS OF THE SUBFOOTING SHALL BE 1'-0" OUTSIDE THE LIMITS OF THE FOOTING.

32. THE ABUTMENTS HAVE BEEN DESIGNED FOR THE TOP OF THE FOOTING ELEVATIONS AS SHOWN ON THE PLANS. IF THE LEDGE ELEVATION IS GREATER THAN 1'-0" BELOW THE DESIGN BOTTOM OF FOOTING, A SUBFOOTING SHALL BE POURED SO THAT THE DESIGN TOP OF FOOTING IS AT THE REQUIRED ELEVATION, USING "CONCRETE, CLASS C"

33. FOR ALL SUBSTRUCTURES, WHERE LEDGE IS WITHIN ONE FOOT FROM THE BOTTOM OF THE FOOTING AS DESIGNED, THE FOOTING MAY BE POURED TO THE TOP OF THE LEDGE USING "CONCRETE, HIGH PERFORMANCE CLASS B"

34. IF LEDGE IS ABOVE THE DESIGN BOTTOM OF FOOTING, THE FOOTING MAY BE RAISED. BEFORE ANY UPWARD ADJUSTMENT IS MADE IN FOOTING ELEVATION, THE PROJECT MANAGEER SHALL BE CONTACTED AND PROVIDED WITH A LEDGE PROFILE. NO FURTHER WORK SHALL BE DONE UNTIL APPROVAL OF THE CONFIGURATION IS RECEIVED.

35. #8 DOWELS SHALL BE DRILLED AND GROUTED INTO THE LEDGE AS SHOWN ON THE PLANS. THE DOWELS SHALL HAVE A MINIMUM 2'-0" EMBEDMENT INTO THE LEDGE AND SHALL EXTEND INTO THE FOOTING A MINIMUM OF 1'-6". IN AREAS WHERE A SUBFOOTING IS REQUIRED #8 DOWELS WILL ALSO BE USED AT THE INTERFACE BETWEEN SUBFOOTING AND FOOTING. THE DRILLING AND GROUTING SHALL BE PAID FOR UNDER THE ITEM 507.16, "DRILLING AND GROUTING DOWELS".

36. ABUTMENT FOOTINGS SHALL BEAR ON LEDGE. WINGWALL FOOTINGS MAY BEAR ON LEDGE OR SOIL.

37. WHERE THE WINGWALL FOOTINGS BEAR ON SOIL, THE SUBGRADE SHALL BE OVER-EXCAVATED AND REPLACED WITH 12 INCHES OF CRUSHED STONE WRAPPED IN A NON-WOVEN GEOTEXTILE FABRIC.

38. PEAT OR OTHER ORGANIC SOILS ENCOUNTERED WITHIN THE LIMITS OF WORK SHALL BE REMOVED THROUGH OVER-EXCAVATION AS DIRECTED BY THE ENGINEER. PAYMENT WILL BE IN ACCORDANCE WITH THE GOVERNING EXCAVATION ITEM. IN FOUNDATION BEARING AREAS, OVER-EXCAVATED AREAS SHALL BE BACKFILLED WITH GRANULAR BACKFILL FOR STRUCTURES.

TRAFFIC CONTROL

39. THE TRAFFIC CONTROL PLAN INCLUDED IN THIS PLAN SET IS SCHEMATIC ONLY AND SHOULD BE USED AS A REFERENCE. THE CONTRACTOR SHALL DEVELOP AND IMPLEMENT A SITE SPECIFIC TRAFFIC CONTROL PLAN FOR TEMPORARY BRIDGE PER THE LATEST VERSION OF THE MANUAL ON UNIFORM TRAFFIC CONTROL DEVICES. THE CONTRACTOR SHALL ALLOW THE ENGINEER 14 CALENDAR DAYS TO REVIEW AND ACCEPT THE PROPOSED PLANS BEFORE THEY ARE TO BE IMPLEMENTED. NO WORK SHALL COMMENCE UNTIL THE TRAFFIC CONTROL PLAN HAS BEEN APPROVED.

40. DEVELOPMENT AND IMPLEMENTATION OF TRAFFIC CONTROL PLAN SHALL BE PAID FOR UNDER ITEM 641.10 TRAFFIC CONTROL.

41. ACCESS TO ALL EXISTING SIDE ROADS, DRIVES AND PARKING AREAS SHALL BE MAINTAINED AT ALL TIMES DURING CONSTRUCTION.

42. DESIGN OF THE SIGNAL SUPPPORTS AND ANY REQUIRED GUYING IS THE RESPONSIBILITY OF THE CONTRACTOR.

43. SIGNAL TIMING / TIMING ADJUSTMENTS REQUESTED BY THE ENGINEER SHALL BE ACCOMPLISHED WITHIN A 48 HOUR PERIOD AND PAYMENT SHALL BE INCIDENTAL TO ITEM 678.40, "TEMPORARY TRAFFIC SIGNAL SYSTEM". THE ENGINEER SHALL MAKE SEVERAL TRIAL RUNS TO DETERMINE THE PROPER ALL-RED CLEARANCE INTERVAL.

44. SIGNAL FACES SHALL BE LED AND CONSIST OF 12" LENSES. (RED, YELLOW, AND GREEN).

45. THE BOTTOM OF THE HOUSING OF A SIGNAL FACE SUSPENDED OVER A ROADWAY SHALL NOT BE LESS THAN 16.5 FEET NOR MORE THAN 19 FEET ABOVE THE PAVEMENT GRADE AT THE CENTER OF THE ROADWAY. THE BOTTOM OF A SIGNAL FACE NOT MOUNTED OVER A ROADWAY SHALL NOT BE LESS THAN 8 FEET NOR MORE THAN 15 FEET ABOVE THE GROUND. CAUTION SHOULD BE USED TO INSURE COMPLIANCE WITH THE HEIGHT REQUIREMENTS IN THE EVENT THE NEW APPROACH GRADES DIFFER SIGNIFICANTLY FROM THE OLD ROAD GRADE.

46. SIGNAL FACES FOR ANY ONE APPROACH SHALL NOT BE LESS THAN 8 FEET APART MEASURED HORIZONTALLY BETWEEN CENTER FACES.

47. SIGNAL HEADS MAY BE HUNG ON A SPAN WIRE OR ON A CANTILEVER MAST ARM. AT LEAST ONE SIGNAL HEAD SHALL BE UNMISTAKABLY IN LINE WITH THE CENTER OF APPROACHING TRAFFIC AT ALL TIMES. THE SECOND SIGNAL HEAD MAY BE POST MOUNTED, LOCATED AT A DISTANCE OF NO GREATER THAN 14.5 FEET FROM THE CENTER OF THE APPROACH LANE WHEN THE STOP BAR IS 40 FEET FROM THE SIGNAL HEAD. CONSULT THE CURRENT EDITION OF THE M.U.T.C.D. FOR ADDITIONAL INFORMATION CONCERNING SIGNAL PLACEMENT.

48. THE SIGNAL SYSTEM SHALL CONSIST OF POLES, SIGNS AND POSTS, WARNING SIGNS, LUMINARIES, FLASHING BEACONS, ASSOCIATED PAVEMENT MARKINGS, AND SIGNAL EQUIPMENT TO PROVIDE FOR AN ADEQUATE DESIGN. IT ALSO INCLUDES PERMITS AND COSTS ASSOCIATED WITH PROVIDING ELECTRICAL POWER.

49. INSTALL WIRING BETWEEN SIGNAL POLES BY WHATEVER MEANS POSSIBLE OR CONVENIENT TO PROVIDE FOR A SAFE INSTALLATION. ATTACHMENT TO UTILITY POLES TO BE COORDINATED BY THE CONTRACTOR WITH THE UTILITY COMPANY.

50. PLACE TEMPORARY POLES BEHIND GUARDRAIL WHERE POSSIBLE.

51. POLES SUPPORTING SPAN WIRES AND/OR MAST ARMS SHALL BE ADEQUATELY BRACED OR GUYED AND SHALL BE PLACED SO AS NOT TO CREATE A HAZARD TO THE TRAVELING PUBLIC.

52. ALL TEMPORARY SIGNAL EQUIPMENT, SIGNS, ETC., SHALL BELONG TO THE CONTRACTOR AT THE END OF THE PROJECT AND THE CONTRACTOR SHALL BE RESPONSIBLE FOR THEIR REMOVAL INCLUDING ANY TEMPORARY PAVEMENT MARKINGS, UTILITY POLES, WIRES, ETC.

53. A 250 WATT MER/150 WATT HSP LUMINAIRE AND MAST ARM SHALL BE PROVIDED ON A POLE ON EACH APPROACH AT A MOUNTING HEIGHT OF 30 FEET ABOVE THE ROADWAY CENTERLINE. THE INTENT IS TO LIGHT UP THE AREA AROUND THE SIGNAL HEADS AND STOP BAR FOR INCREASED VISIBILITY. THE ENGINEER SHALL DETERMINE THE ADEQUACY OF THE LIGHTING AND DIRECT CHANGES IF THE LIGHTING IS INSUFFICIENT. LIGHTING SHALL BE PAID INCIDENTAL TO ITEM 678.40, "TEMPORARY TRAFFIC SIGNAL SYSTEM".

54. STOP BARS SHALL BE LOCATED A MINIMUM OF 40' AND A MAXIMUM OF 120' FROM THE NEAREST SIGNAL HEAD.

55. SEE STD. E-140 FOR "STOP HERE ON RED" SIGN DETAIL. SEE STD. E-121 FOR SIGN PLACEMENT, SEE STD. E-172 FOR ADDITIONAL INFORMATION ON SIGNALS.

56. ALL ELECTRIC WORK SHALL MEET THE REQUIREMENTS OF THE NATIONAL ELECTRICAL CODE AND STATE INSPECTOR.

57. ALL STOP SIGNS AND ANY TRAFFIC SIGNS MADE IRRELEVANT DUE TO THE TEMPORARY SIGNAL SHALL BE COVERED DURING OPERATION OF THE TEMPORARY SIGNAL, OR AT THE DISCRETION OF THE ENGINEER. THE COSTS OF COVERING AND UNCOVERING THESE SIGNS SHALL BE PAID INCIDENTAL TO ITEM 641.10, "TRAFFIC CONTROL".

58. THE CONTRACTOR SHALL BE RESPONSIBLE FOR DETERMINING SIGNAL PHASING. THE CONTRACTOR SHALL SUBMIT PHASING DIAGRAM TO THE ENGINEER FOR APPROVAL. THE CONTRACTOR SHALL MAKE SIGNALS OPERATIONAL ONLY AFTER RECEIVING APPROVAL OF THE PHASING DIAGRAM BY THE ENGINEER. DEVELOPMENT OF THE PHASING DIAGRAM SHALL BE PAID INCIDENTAL TO ITEM 678.40, "TEMPORARY TRAFFIC SIGNAL SYSTEM".

STATE OF VERMONT
AGENCY OF TRANSPORTATION

QUANTITY SHEET 1

SUMMARY OF ESTIMATED QUANTITIES				TOTALS		DESCRIPTIONS			
ROADWAY	EROSION CONTROL	BRIDGE	FULL C.E. ITEMS	GRAND TOTAL	FINAL	UNIT	ITEMS	ITEM NUMBER	ROUND
1				1		LS	CLEARING AND GRUBBING, INCLUDING INDIVIDUAL TREES AND STUMPS	201.10	
1				1		EACH	REMOVING MEDIUM TREES	201.15	
570				570		CY	COMMON EXCAVATION	203.15	
30		125		155		CY	SOLID ROCK EXCAVATION	203.16	
		70		70		CY	UNCLASSIFIED CHANNEL EXCAVATION	203.27	
220				220		CY	TRENCH EXCAVATION OF EARTH	204.20	
11				11		CY	TRENCH EXCAVATION OF ROCK	204.21	
1				1		CY	TRENCH EXCAVATION OF EARTH, EXPLORATORY (N.A.B.I.)	204.22	
		770		770		CY	STRUCTURE EXCAVATION	204.25	
		620		620		CY	GRANULAR BACKFILL FOR STRUCTURES	204.30	
610				610		CY	SUBBASE OF DENSE GRADED CRUSHED STONE	301.35	
15				15		CY	AGGREGATE SURFACE COURSE	401.10	
1				1		LU	PRICE ADJUSTMENT, ASPHALT CEMENT (N.A.B.I.)	406.50	
		280		280		CY	CONCRETE, HIGH PERFORMANCE CLASS B	501.34	
		21900		21900		LB	REINFORCING STEEL, LEVEL I	507.11	
		216		216		LF	DRILLING AND GROUTING DOWELS	507.16	
		20		20		GAL	WATER REPELLENT, SILANE	514.10	
		56		56		LF	BRIDGE EXPANSION JOINT, ASPHALTIC PLUG	516.10	
		175		175		SY	SHEET MEMBRANE WATERPROOFING, TORCH APPLIED	519.20	
		131		131		LF	BRIDGE RAILING, GALVANIZED STEEL TUBING/CONCRETE COMBINATION (COATED BLACK)	525.45	
		1		1		LS	ONE-WAY TEMPORARY BRIDGE (1620 SF - EST.)	528.10	
		1		1		EACH	REMOVAL OF STRUCTURE (650 SF - EST.)	529.15	
		12		12		EACH	BEARING DEVICE ASSEMBLY, STEEL REINFORCED ELASTOMERIC PAD	531.17	
		25		25		CY	CONCRETE, CLASS C	541.30	
							BEGIN OPTION AA		
172				172		LF	18" CAAP .060 (2-2/3 X 1/2)	601.0215	
172				172		LF	18" PCCSP .064 (2-2/3 X 1/2)	601.0415	
172				172		LF	18" RCP CLASS III	601.0815	
172				172		LF	18" CPEP(SL)	601.2615	
							END OPTION AA		
							BEGIN OPTION BB		
1				1		EACH	18" CSPES .064 (2-2/3 X 1/2)	601.6015	
1				1		EACH	18" CAAPES .060 (2-2/3 X 1/2)	601.6215	
1				1		EACH	18" RCPES CLASS III	601.6815	
							END OPTION BB		
3				3		EACH	PRECAST REINFORCED CONCRETE DROP INLET WITH CAST IRON GRATE	604.18	
10				10		HR	BULLDOZER RENTAL, TYPE I	608.10	
10				10		HR	POWER GRADER RENTAL	608.15	
10				10		HR	ALL PURPOSE EXCAVATOR RENTAL, TYPE I	608.25	
5				5		HR	POWER BROOM RENTAL, TYPE I	608.30	

DETAILED SUMMARY OF QUANTITIES		
QUANTITIES	UNIT	ITEMS
		FILL REQUIRED
21	CY	MEASURED AREA FILL
39	CY	LESS FACTORED SOLID ROCK EXCAVATION
0	CY	LESS DISPLACEMENT OF ANY LARGE BURIED STRUCTURES
-18	CY	NET MEASURED AREA FILL
-21	CY	1.15 X NET MEASURED AREA FILL = FACTORED FILL
		MEASURED AREA MATERIAL AVAILABLE FOR FILL
564	CY	EARTH EXCAVATION
220	CY	TRENCH EXCAVATION OF EARTH
70	CY	CHANNEL EXCAVATION
770	CY	STRUCTURE EXCAVATION
1624	CY	TOTAL MATERIAL AVAILABLE FOR FILL
1624	**CY**	**WASTE**

Stantec

PROJECT NAME: CORINTH
PROJECT NUMBER: BRO 1447(29)

FILE NAME: ...\drawing\z01j292_frm.dgn
PROJECT LEADER: G. BOGUE
DESIGNED BY: M. CHENETTE
QUANTITY SHEET – QTY 1

PLOT DATE: 8/4/2014
DRAWN BY: E. ALLING
CHECKED BY: G. BOGUE
SHEET 6 OF 57

STATE OF VERMONT
AGENCY OF TRANSPORTATION

QUANTITY SHEET 2

SUMMARY OF ESTIMATED QUANTITIES				TOTALS		DESCRIPTIONS			
ROADWAY	EROSION CONTROL	BRIDGE	FULL C.E. ITEMS	GRAND TOTAL	FINAL	UNIT	ITEMS	ITEM NUMBER	ROUND
10				10		HR	TRUCK RENTAL	608.37	
10				10		HR	LOADER RENTAL, TYPE I	608.40	
0.5				0.5		MGAL	DUST CONTROL WITH WATER	609.10	
0.5				0.5		TON	DUST AND ICE CONTROL WITH CALCIUM CHLORIDE	609.15	
10				10		CY	STONE FILL, TYPE III	613.12	
150				150		LF	VERTICAL GRANITE CURB	616.21	
2				2		EACH	RELOCATE MAILBOX, SINGLE SUPPORT	617.10	
40				40		LF	REMOVAL OF EXISTING FENCE	620.55	
141				141		LF	BOX BEAM GUARDRAIL (COATED BLACK)	621.30	
		4		4		EACH	GUARDRAIL APPROACH SECTION, GALVANIZED 2 RAIL BOX BEAM (COATED BLACK)	621.72	
95				95		LF	REMOVAL AND DISPOSAL OF GUARDRAIL	621.80	
160				160		HR	FLAGGERS	630.15	
			1	1		LS	FIELD OFFICE, ENGINEERS	631.10	
			1	1		LS	TESTING EQUIPMENT, CONCRETE	631.16	
			3000	3000		DL	FIELD OFFICE TELEPHONE (N.A.B.I.)	631.26	
1				1		LS	MOBILIZATION/DEMOBILIZATION	635.11	
1				1		LS	TRAFFIC CONTROL	641.10	
3				3		EACH	PORTABLE CHANGEABLE MESSAGE SIGN	641.15	
100				100		LF	4 INCH YELLOW LINE	646.21	
20				20		LF	24 INCH STOP BAR	646.26	
4				4		EACH	LETTER OR SYMBOL	646.30	
30		150		180		SY	GEOTEXTILE UNDER STONE FILL	649.31	
	75			75		SY	GEOTEXTILE FOR SILT FENCE	649.51	
25				25		LB	SEED	651.15	
25				25		LB	SEED, WINTER RYE	651.17	
150				150		LB	FERTILIZER	651.18	
0.7				0.7		TON	AGRICULTURAL LIMESTONE	651.20	
0.7				0.7		TON	HAY MULCH	651.25	
170				170		CY	TOPSOIL	651.35	
	1			1		LS	EPSC PLAN	652.10	
	80			80		HR	MONITORING EPSC PLAN	652.20	
	1			1		LU	MAINTENANCE OF EPSC PLAN (N.A.B.I.)	652.30	
	800			800		SY	TEMPORARY EROSION MATTING	653.20	
	10			10		CY	TEMPORARY STONE CHECK DAM, TYPE I	653.25	
	40			40		CY	VEHICLE TRACKING PAD	653.35	
	2			2		EACH	INLET PROTECTION DEVICE, TYPE I	653.40	
700				700		LF	PROJECT DEMARCATION FENCE	653.55	
54				54		SF	TRAFFIC SIGNS, TYPE A	675.20	
140				140		LF	SQUARE TUBE SIGN POST AND ANCHOR	675.341	
8				8		EACH	REMOVING SIGNS	675.50	

DETAILED SUMMARY OF QUANTITIES		
QUANTITIES	UNIT	ITEMS
		900.680 SPECIAL PROVISION (BITUMINOUS CONCRETE PAVEMENT, SMALL QUANTITY)
136	TON	TYPE IIS
171	TON	TYPE IVS
307	TON	SUBTOTAL
8	TON	ROUND
315	TON	TOTAL

Stantec

PROJECT NAME: CORINTH
PROJECT NUMBER: BRO 1447(29)

FILE NAME: ...\drawing\z01j292_frm.dgn
PROJECT LEADER: G. BOGUE
DESIGNED BY: M. CHENETTE
QUANTITY SHEET – QTY 2

PLOT DATE: 8/4/2014
DRAWN BY: E. ALLING
CHECKED BY: G. BOGUE
SHEET 7 OF 57

STATE OF VERMONT
AGENCY OF TRANSPORTATION

QUANTITY SHEET 3

SUMMARY OF ESTIMATED QUANTITIES					TOTALS		DESCRIPTIONS			
ROADWAY	EROSION CONTROL	BRIDGE	FULL C.E. ITEMS		GRAND TOTAL	FINAL	UNIT	ITEMS	ITEM NUMBER	ROUND
1					1		EACH	TEMPORARY TRAFFIC SIGNAL SYSTEM	678.40	
		3			3		CY	SPECIAL PROVISION (HIGH PERFORMANCE CONCRETE, RAPID SET)(FPQ)	900.608	
	1				1		EACH	SPECIAL PROVISION (INLET PROTECTION DEVICE, FILTER FIBER)	900.620	
		189			189		LF	SPECIAL PROVISION (PRESTRESSED CONCRETE NEXT D BEAMS)(NEXT 28 D)	900.640	
1					1		LU	SPECIAL PROVISION (MAT DENSITY PAY ADJUSTMENT, SMALL QUANTITY)(N.A.B.I.)	900.650	
1					1		LU	SPECIAL PROVISION (MIXTURE PAY ADJUSTMENT)(N.A.B.I.)	900.650	
280		35			315		TON	SPECIAL PROVISION (BITUMINOUS CONCRETE PAVEMENT, SMALL QUANTITY)	900.680	
4		1			5		CWT	SPECIAL PROVISION (EMULSIFIED ASPHALT)(RS-1H OR CRS-1H)	900.683	

DETAILED SUMMARY OF QUANTITIES		
QUANTITIES	UNIT	ITEMS

Stantec

PROJECT NAME: CORINTH
PROJECT NUMBER: BRO 1447(29)

FILE NAME: ...\drawing\z01j292_frm.dgn
PROJECT LEADER: G. BOGUE
DESIGNED BY: M. CHENETTE
QUANTITY SHEET – QTY 3

PLOT DATE: 8/4/2014
DRAWN BY: E. ALLING
CHECKED BY: G. BOGUE
SHEET 8 OF 57

GENERAL INFORMATION

SYMBOLOGY LEGEND NOTE

THE SYMBOLOGY ON THIS SHEET IS INTENDED TO COVER STANDARD CONVENTIONAL SYMBOLOGY. THE SYMBOLOGY IS USED FOR EXISTING & PROPOSED FEATURES WITH HEAVIER LINEWEIGHT, IN COMBINATION WITH PROJECT ANNOTATION, AS NOTED ON PROJECT PLAN SHEETS. THIS LEGEND SHEET COVERS THE BASICS. SYMBOLOGY ON PLANS MAY VARY, PLAN ANNOTATIONS AND NOTES SHOULD BE USED TO CLARIFY AS NEEDED.

R.O.W. ABBREVIATIONS (CODES) & SYMBOLS

POINT	CODE	DESCRIPTION
	CH	CHANNEL EASEMENT
	CONST	CONSTRUCTION EASEMENT
	CUL	CULVERT EASEMENT
	D&C	DISCONNECT & CONNECT
	DIT	DITCH EASEMENT
	DR	DRAINAGE EASEMENT
	DRIVE	DRIVEWAY EASEMENT
	EC	EROSION CONTROL
	I&M	INSTALL & MAINTAIN EASEMENT
	LAND	LANDSCAPE EASEMENT
	SR	SLOPE RIGHT
	UE	UTILITY EASEMENT
	(P)	PERMANENT EASEMENT
	(T)	TEMPORARY EASEMENT
■	BNDNS	BOUND SET
⊡	BNDNS	BOUND TO BE SET
●	IPNS	IRON PIN SET
◎	IPNS	IRON PIN TO BE SET
⊠	CALC	CALCULATED ROW POINT
[DISTANCE]		DISTANCE CARRIED ON NEXT SHEET

COMMON TOPOGRAPHIC POINT SYMBOLS

POINT	CODE	DESCRIPTION
	APL	BOUND APPARENT LOCATION
	BM	BENCH MARK
	BND	BOUND
	CB	CATCH BASIN
	COMB	COMBINATION POLE
	DITHR	DROP INLET THROATED DNC
	EL	ELECTRIC POWER POLE
	FPOLE	FLAGPOLE
	GASFIL	GAS FILLER
	GP	GUIDE POST
	GSO	GAS SHUT OFF
	GUY	GUY POLE
	GUYW	GUY WIRE
	GV	GATE VALUE
	H	TREE HARDWOOD
	HCTRL	CONTROL HORIZONTAL
	HVCTRL	CONTROL HORIZ. & VERTICAL
	HYD	HYDRANT
	IP	IRON PIN
	IPIPE	IRON PIPE
	LI	LIGHT - STREET OR YARD
	MB	MAILBOX
	MH	MANHOLE (MH)
	MM	MILE MARKER
	PM	PARKING METER
	PMK	PROJECT MARKER
	POST	POST STONE/WOOD
	RRSIG	RAILROAD SIGNAL
	RRSL	RAILROAD SWITCH LEVER
	S	TREE SOFTWOOD
	SAT	SATELLITE DISH
	SHRUB	SHRUB
	SIGN	SIGN
	STUMP	STUMP
	TEL	TELEPHONE POLE
	TIE	TIE
	TSIGN	SIGN W/DOUBLE POST
	VCTRL	CONTROL VERTICAL
	WELL	WELL
	WSO	WATER SHUT OFF

THESE ARE COMMON VAOT SURVEY POINT SYMBOLS FOR EXISTING FEATURES, ALSO USED FOR PROPOSED FEATURES WITH HEAVIER LINEWEIGHT, IN COMBINATION WITH PROPOSED ANNOTATION.

PROPOSED GEOMETRY CODES

CODE	DESCRIPTION
PC	POINT OF CURVATURE
PI	POINT OF INTERSECTION
CC	CENTER OF CURVE
PT	POINT OF TANGENCY
PCC	POINT OF COMPOUND CURVE
PRC	POINT OF REVERSE CURVE
POB	POINT OF BEGINNING
POE	POINT OF ENDING
STA	STATION PREFIX
AH	AHEAD STATION SUFFIX
BK	BACK STATION SUFFIX
D	CURVE DEGREE OF (100FT)
R	CURVE RADUIS OF
T	CURVE TANGENT LENGTH
L	CURVE LENGTH OF
E	CURVE EXTERNAL DISTANCE

UTILITY SYMBOLOGY

UNDERGROUND UTILITIES

UT	TELEPHONE
UE	ELECTRIC
UC	CABLE (TV)
UEC	ELECTRIC+CABLE
UET	ELECTRIC+TELEPHONE
UCT	CABLE+TELEPHONE
UECT	ELECTRIC+CABLE+TELEP.
G	GAS LINE
W	WATER LINE
S	SANITARY SEWER (SEPTIC)

ABOVE GROUND UTILITIES (AERIAL)

T	TELEPHONE
E	ELECTRIC
C	CABLE (TV)
EC	ELECTRIC+CABLE
ET	ELECTRIC+TELEPHONE
AER E&T	ELECTRIC+TELEPHONE
CT	CABLE+TELEPHONE
ECT	ELECTRIC+CABLE+TELEP.
	UTILITY POLE GUY WIRE

PROJECT CONSTRUCTION SYMBOLOGY

PROJECT DESIGN & LAYOUT SYMBOLOGY

CZ	CLEAR ZONE
	PLAN LAYOUT MATCHLINE

PROJECT CONSTRUCTION FEATURES

	TOP OF CUT SLOPE
	TOE OF FILL SLOPE
	STONE FILL
	BOTTOM OF DITCH ℄
	CULVERT PROPOSED
	STRUCTURE SUBSURFACE
PDF PDF	PROJECT DEMARCATION FENCE
BF BF	BARRIER FENCE
	TREE PROTECTION ZONE (TPZ)
	STRIPING LINE REMOVAL
	SHEET PILES

CONVENTIONAL BOUNDARY SYMBOLOGY

BOUNDARY LINES

TOWN LINE	TOWN BOUNDARY LINE
COUNTY LINE	COUNTY BOUNDARY LINE
STATE LINE	STATE BOUNDARY LINE
	PROPOSED STATE R.O.W. (LIMITED ACCESS)
	PROPOSED STATE R.O.W.
	STATE ROW (LIMITED ACCESS)
	STATE ROW
	TOWN ROW
	PERMANENT EASEMENT LINE (P)
	TEMPORARY EASEMENT LINE (T)
	SURVEY LINE
P/L	PROPERTY LINE (P/L)
SR	SLOPE RIGHTS
6f	6F PROPERTY BOUNDARY
4f	4F PROPERTY BOUNDARY
HAZ	HAZARDOUS WASTE

EPSC LAYOUT PLAN SYMBOLOGY

EPSC MEASURES

	FILTER CURTAIN
	SILT FENCE
	SILT FENCE WOVEN WIRE
	CHECK DAM
	DISTURBED AREAS REQUIRING RE-VEGETATION
	EROSION MATTING

ENVIRONMENTAL RESOURCES

	WETLAND BOUNDARY
	RIPARIAN BUFFER ZONE
	WETLAND BUFFER ZONE
	SOIL TYPE BOUNDARY
T&E	THREATENED & ENDANGERED SPECIES
HAZ HAZ	HAZARDOUS WASTE AREA
AG	AGRICULTURAL LAND
HABITAT	FISH & WILDLIFE HABITAT
FLOOD PLAIN	FLOOD PLAIN
OHW	ORDINARY HIGH WATER (OHW)
	STORM WATER
	USDA FOREST SERVICE LANDS
	WILDLIFE HABITAT SUIT/CONN

ARCHEOLOGICAL & HISTORIC

ARCH	ARCHEOLOGICAL BOUNDARY
HISTORIC DIST	HISTORIC DISTRICT BOUNDARY
HISTORIC	HISTORIC AREA
H	HISTORIC STRUCTURE

CONVENTIONAL TOPOGRAPHIC SYMBOLOGY

EXISTING FEATURES

	ROAD EDGE PAVEMENT
	ROAD EDGE GRAVEL
	DRIVEWAY EDGE
	DITCH
	FOUNDATION
	FENCE (EXISTING)
	FENCE WOOD POST
	FENCE STEEL POST
	GARDEN
	ROAD GUARDRAIL
	RAILROAD TRACKS
	CULVERT (EXISTING)
	STONE WALL
	WALL
	WOOD LINE
	BRUSH LINE
	HEDGE
	BODY OF WATER EDGE
	LEDGE EXPOSED

Stantec

PROJECT NAME: CORINTH	
PROJECT NUMBER: BRO 1447(29)	
FILE NAME: z01j292_legend.dgn	PLOT DATE: 8/4/2014
PROJECT LEADER: G. BOGUE	DRAWN BY: VTRANS
DESIGNED BY: VTRANS	CHECKED BY: VTRANS
CONVENTIONAL SYMBOLOGY LEGEND	SHEET 9 OF 57

GPS/NGS CONTROL POINTS

TRAVERSE TIES

HVCTRL #1 — 5/8" REBAR W/VSE CAP

NORTH = 570700.96
EAST = 1713106.10
ELEV. = 711.40

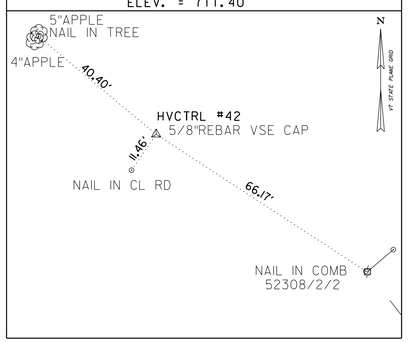

HVCTRL #2 — 5/8" REBAR W/VSE CAP

NORTH = 570210.13
EAST = 1713235.15
ELEV. = 704.66

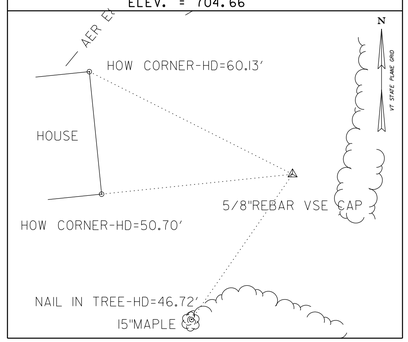

BASELINE TIES

POB STA. 100+00.00

NORTH = 570485.95
EAST = 1713212.90

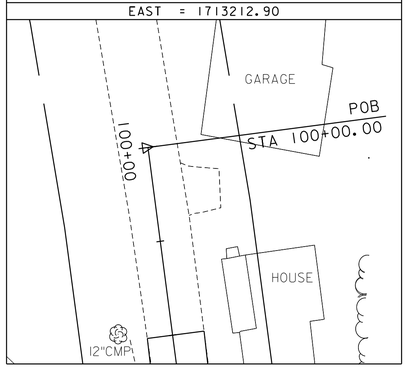

POT STA. 103+73.09

NORTH = 570201.04
EAST = 1713405.04

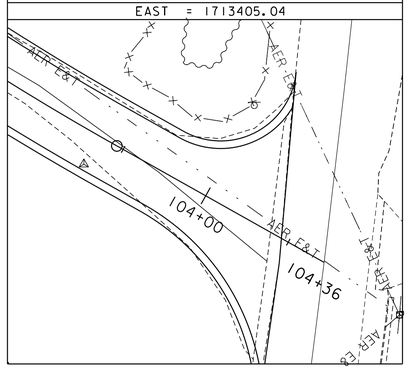

POB STA. 9+47.93

NORTH = 570537.36
EAST = 1713204.66

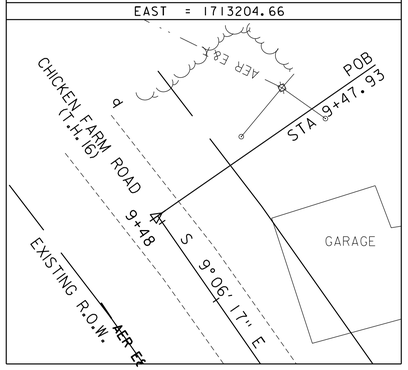

NORTH =
EAST =

NORTH =
EAST =

DATUM	
VERTICAL	NAVD 88 FT
HORIZONTAL	NAD 83(2011) sFT
ADJUSTMENT	LSQ

8/4/2014 12:13:06 PM V:\1953\active\195310795\transportation\drawing\z01j292_tie.dgn

Stantec

PROJECT NAME: CORINTH
PROJECT NUMBER: BRO 1447(29)

FILE NAME: ...\drawing\z01j292_tie.dgn
PROJECT LEADER: G. BOGUE
DESIGNED BY: M. CHENETTE
TIE SHEET

PLOT DATE: 8/4/2014
DRAWN BY: E. ALLING
CHECKED BY: G. BOGUE
SHEET 10 OF 57

ITEM 621.72 - GUARDRAIL APPROACH SECTION, GALVANIZED 2 RAIL BOX BEAM (COATED BLACK)

STA. 101+63.5 - 101+97.5, LT.
STA. 101+88.4 - 102+11.3, RT.
STA. 102+62.7 - 102+96.7, LT.
STA. 102+76.5 - 103+10.5, RT.

ITEM 621.30 - BOX BEAM GUARDRAIL (COATED BLACK)

STA. 100+87.9 - 101+63.5, LT.
STA. 101+87.3 - 101+88.4, RT.
STA. 102+96.7 - 103+54.3, LT.
STA. 103+10.5 - 103+14.1, RT.

ITEM 616.21 - VERTICAL GRANITE CURB

STA. 100+90.0 - 102+04.4, LT.
STA. 102+69.5 - 102+98.8, LT.

DRIVES

STA. 101+87.6, RT. (GRAVEL)

ITEM 201.15 - REMOVING MEDIUM TREES

STA. 101+41.6, LT.

ITEM 620.55 - REMOVAL OF EXISTING FENCE

STA. 102+88.5 - 103+28.8, LT.

ITEM 621.80 - REMOVAL AND DISPOSAL OF GUARDRAIL

STA. 101+99.6 - 102+21.4, LT.
STA. 102+11.3 - 102+25.6, RT.
STA. 102+62.1 - 102+81.0, LT.
STA. 102+66.1 - 102+93.8, RT.

ITEM 613.12 - STONE FILL, TYPE III

STA. 102+23 - 102+38, RT.

ITEM 617.10 - RELOCATE MAILBOX, SINGLE SUPPORT

STA. 101+69.8, RT.

(100) STA. 101+67 RT TO STA. 102+23 RT
NEW 18" X 64', PIPE OPTION 1
WITH DI @ INLET AND ES @ OUTLET

(101) STA. 101+56 LT TO STA. 101+67 RT
NEW 18" X 28', PIPE OPTION 1
WITH DI @ INLET AND OUTLET

(102) STA. 100+90 RT TO STA. 101+67 RT
NEW 18" X 80', PIPE OPTION 1
WITH DI @ INLET AND OUTLET

PIPE OPTION 1 = PCCSP, CAAP, RCP OR CPEP(SL)

CHICKEN FARM ROAD (T.H. 16) CURVE DATA

CURVE (1)	CURVE (2)
Δ = 48°45'20"	Δ = 7°11'44"
D = 76°23'40"	D = 7°38'22"
R = 75.00'	R = 750.00'
T = 33.99'	T = 47.16'
L = 63.82'	L = 94.19'
E = 7.34'	E = 1.48'

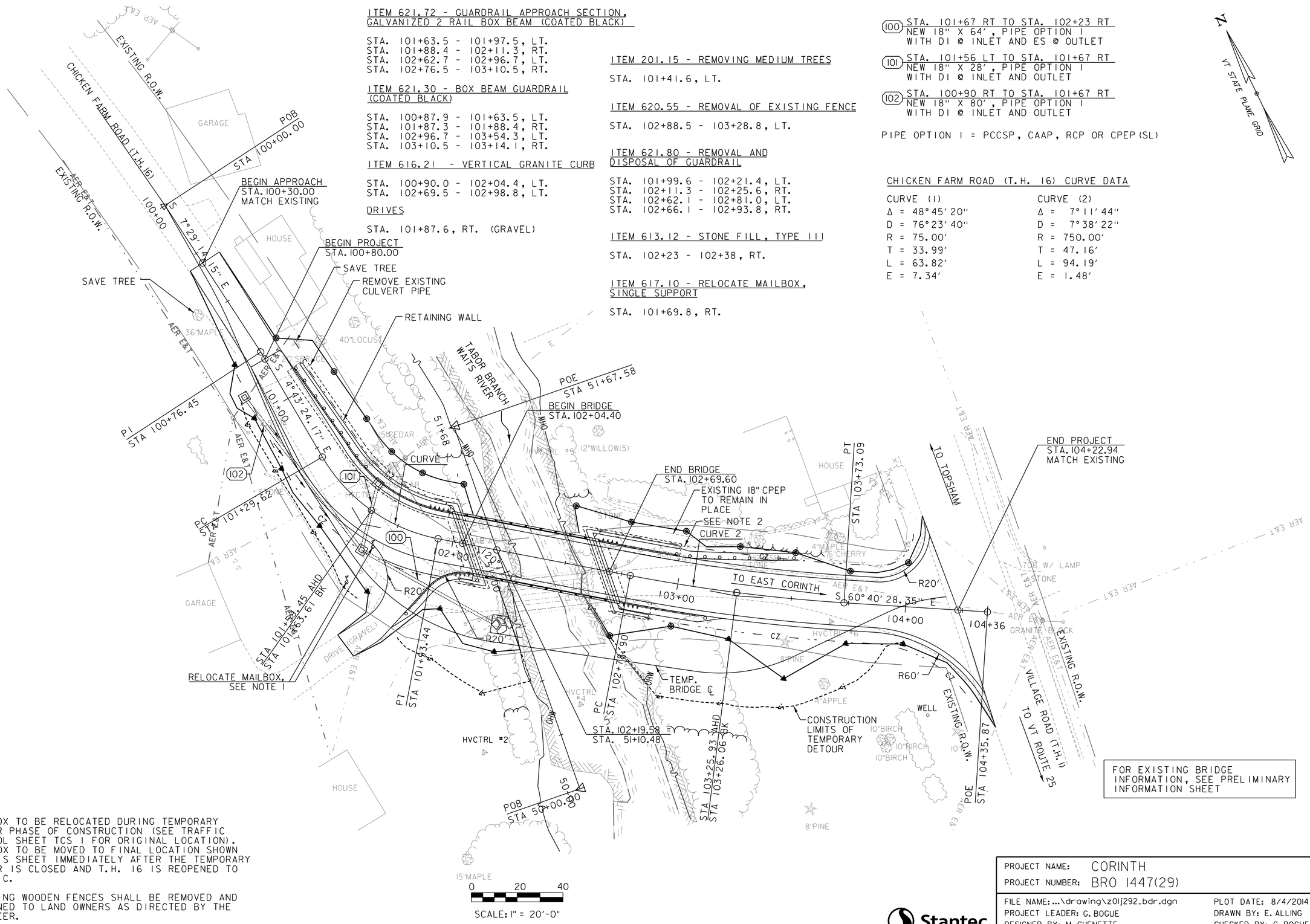

NOTES:

1. MAILBOX TO BE RELOCATED DURING TEMPORARY DETOUR PHASE OF CONSTRUCTION (SEE TRAFFIC CONTROL SHEET TCS 1 FOR ORIGINAL LOCATION). MAILBOX TO BE MOVED TO FINAL LOCATION SHOWN ON THIS SHEET IMMEDIATELY AFTER THE TEMPORARY DETOUR IS CLOSED AND T.H. 16 IS REOPENED TO TRAFFIC.

2. EXISTING WOODEN FENCES SHALL BE REMOVED AND RETURNED TO LAND OWNERS AS DIRECTED BY THE ENGINEER.

Stantec

PROJECT NAME: CORINTH	
PROJECT NUMBER: BRO 1447(29)	
FILE NAME: ...\drawing\z01j292_bdr.dgn	PLOT DATE: 8/4/2014
PROJECT LEADER: G. BOGUE	DRAWN BY: E. ALLING
DESIGNED BY: M. CHENETTE	CHECKED BY: G. BOGUE
PLAN LAYOUT SHEET – PL 1	SHEET 11 OF 57

8/4/2014 12:13:07 PM V:\1953\active\195310795\transportation\drawing\z01j292_bdr.dgn

STATE OF VERMONT
AGENCY OF TRANSPORTATION

DRAINAGE DETAIL SHEET

STATION	STATION	POS.	ASKEW	INLET/OUTLET TYPE		DITCH		PIPE ARCH			PIPE		ALLOWABLE OPTIONS						PIPE ELBOW	ES	CB	PRCCDI	DEPTH DI	CONC CLASS B	REINF STEEL	DI GRATE	CHAN ELEV	CRM	TRENCH EXCAVATION		COMM EXC	UNC CHAN EXC	STRUCT EXCAV	GRAN BKFILL STRUCT	GRAN BORR	EROS MATT	STONE FILL		MARKER POSTS				REMARKS
				INLET	OUTLET	IN	OUT	SPAN	RISE	L	D	L	PCCSP	CAAP	RCP	CSP	CPEP	PCCSP PI											EARTH	ROCK									LT	RT			
			NO. DEG.					IN	IN	FT	IN	FT	TH	TH	CL	TH	SL	TH	NO. DEG.	EA	EA		FT	CY	LBS	TYPE	EA	CY	CY	CY	CY	CY	CY	CY	CY	SY	CY	TYPE	EA	EA			
101+67	102+23	RT		DI	ES						18	64	X	X	III		X			1		1	8.8			A			105								10	III					DI @ INLET (2' SUMP); ES @ OUTLET
101+56	101+67	LT-RT		DI	DI						18	28	X	X	III		X					1	8.2			D			30														DI @ INLET (2' SUMP); DI @ OUTLET (2' SUMP); USE ECCENTRIC CONE AT 10+56 TO AVOID GR POSTS
100+90	101+67	RT		DI	DI						18	80	X	X	III		X					1	8.2			A			85														DI @ INLET (2' SUMP); DI @ OUTLET (2' SUMP)

PROJECT NAME: CORINTH
PROJECT NUMBER: BRO 1447(29)

Stantec

FILE NAME: ...\drawing\z01j292_frm.dgn
PROJECT LEADER: G. BOGUE
DESIGNED BY: M. CHENETTE
DRAINAGE DETAIL SHEET – DDS 1

PLOT DATE: 8/4/2014
DRAWN BY: E. ALLING
CHECKED BY: G. BOGUE
SHEET 12 OF 57

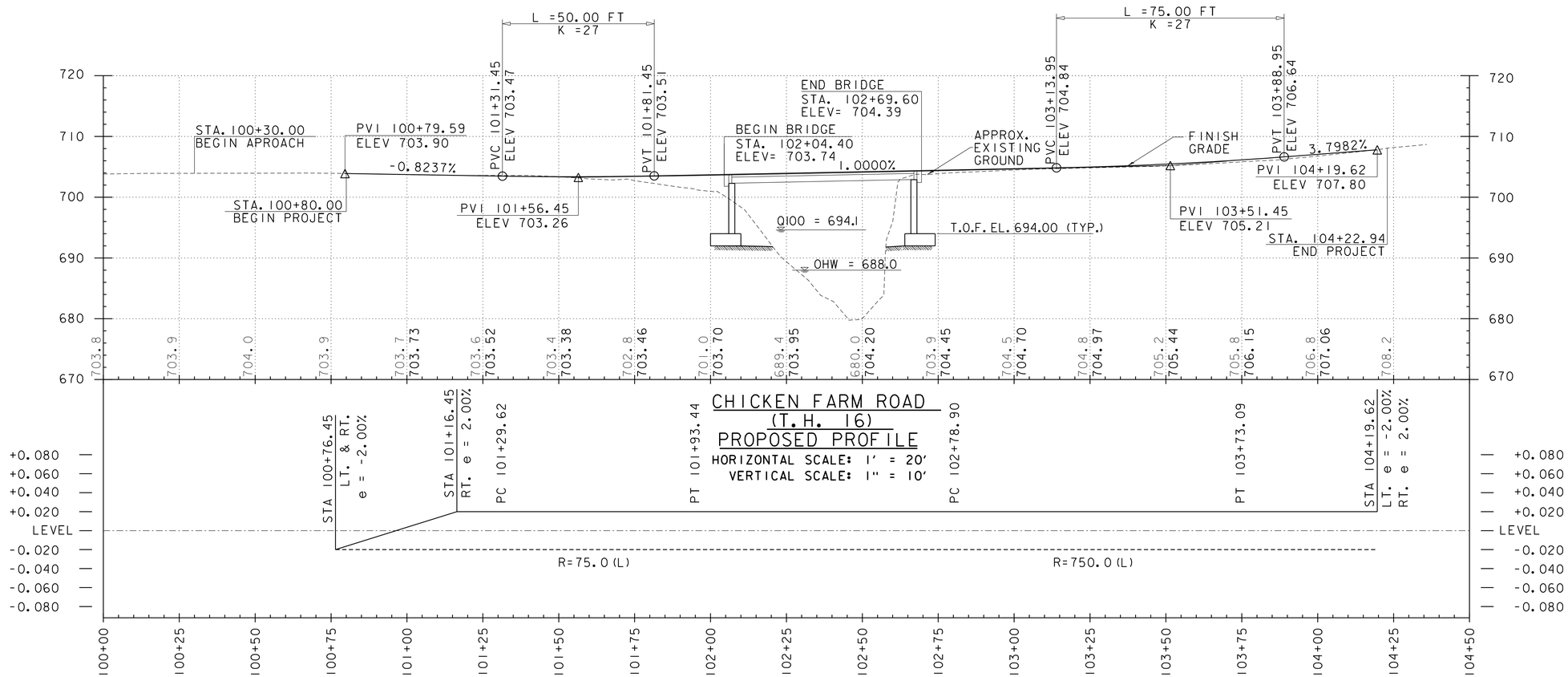

BANKING DIAGRAM

HORIZONTAL SCALE: 1' = 20'

NOTE:

ELEVATIONS SHOWN TO THE NEAREST TENTHS ARE EXISTING GROUND ALONG PROPOSED CENTERLINE.

ELEVATIONS SHOW TO THE NEAREST HUNDREDTHS ARE FINISHED GRADE ALONG PROPOSED CENTERLINE.

Stantec

PROJECT NAME: CORINTH	
PROJECT NUMBER: BRO 1447(29)	
FILE NAME: ...\drawing\z01j292_xs.dgn	PLOT DATE: 8/4/2014
PROJECT LEADER: G. BOGUE	DRAWN BY: E. ALLING
DESIGNED BY: M. CHENETTE	CHECKED BY: G. BOGUE
PROFILE SHEET - PRO 1	SHEET 13 OF 57

8/4/2014 12:13:26 PM V:\1953\active\195310795\transportation\drawing\z01j292_xs.dgn

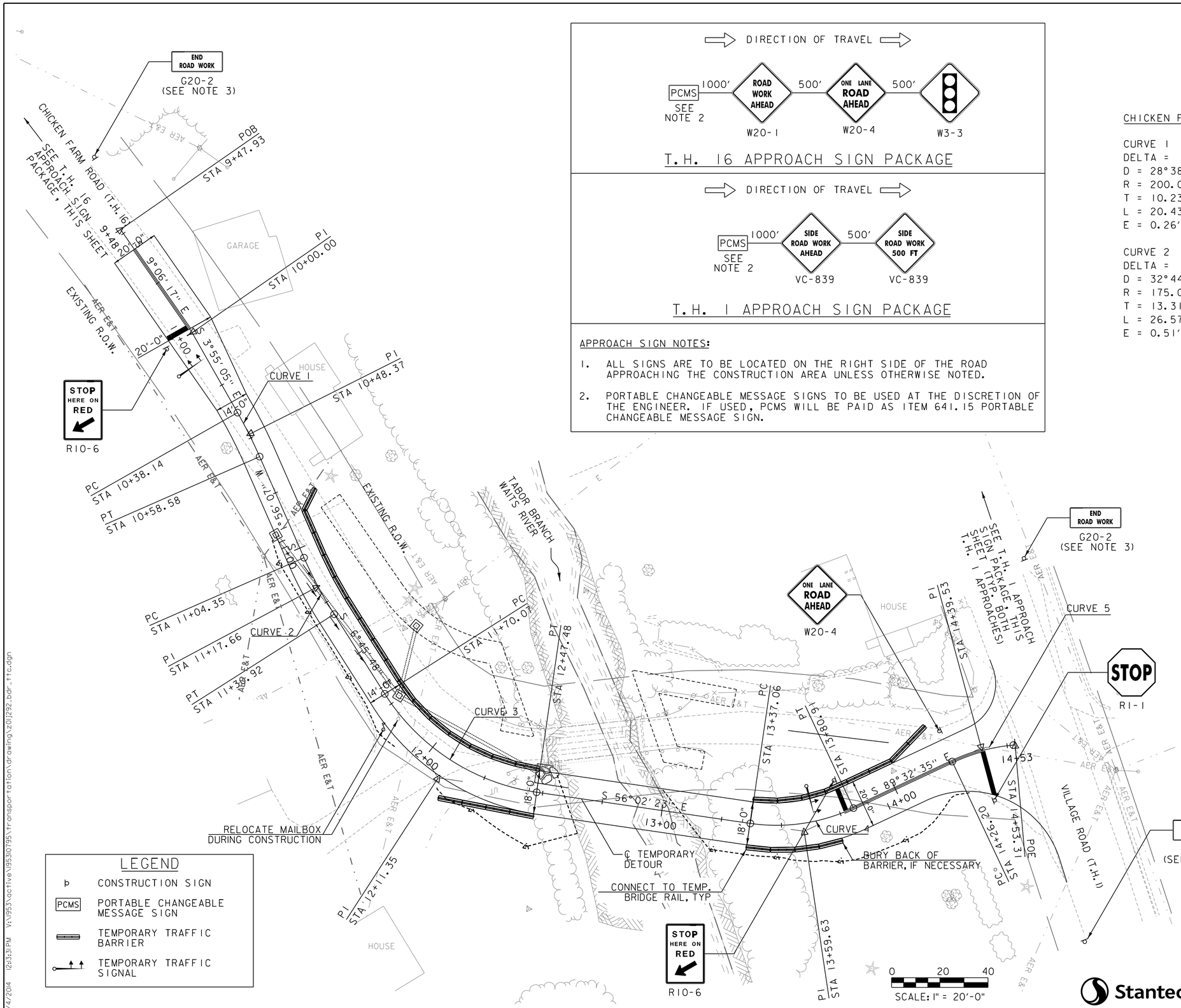

T.H. 16 APPROACH SIGN PACKAGE

T.H. 1 APPROACH SIGN PACKAGE

APPROACH SIGN NOTES:

1. ALL SIGNS ARE TO BE LOCATED ON THE RIGHT SIDE OF THE ROAD APPROACHING THE CONSTRUCTION AREA UNLESS OTHERWISE NOTED.
2. PORTABLE CHANGEABLE MESSAGE SIGNS TO BE USED AT THE DISCRETION OF THE ENGINEER. IF USED, PCMS WILL BE PAID AS ITEM 641.15 PORTABLE CHANGEABLE MESSAGE SIGN.

CHICKEN FARM ROAD (T.H. 16) DETOUR CURVE DATA

CURVE 1	CURVE 3
DELTA = 5°51'12"	DELTA = 49°16'35"
D = 28°38'52"	D = 63°39'43"
R = 200.00'	R = 90.00'
T = 10.23'	T = 41.28'
L = 20.43'	L = 77.40'
E = 0.26'	E = 9.01'
CURVE 2	**CURVE 4**
DELTA = 8°41'55"	DELTA = 33°30'13"
D = 32°44'26"	D = 76°23'40"
R = 175.00'	R = 75.00'
T = 13.31'	T = 22.57'
L = 26.57'	L = 43.86'
E = 0.51'	E = 3.32'

CURVE 5
DELTA = 20°09'23"
D = 76°23'40"
R = 75.00'
T = 13.33'
L = 26.38'
E = 1.18'

TRAFFIC CONTROL NOTES:

1. ALL TRAFFIC SIGNS SHALL CONFORM TO THE CURRENT EDITION OF THE MANUAL ON UNIFORM TRAFFIC CONTROL DEVICES (MUTCD).
2. "END ROAD WORK" SIGNS TO BE LOCATED 500' PAST END OF WORK IN THE THREE DIRECTIONS SHOWN ON THIS SHEET.
3. AT THE DISCRETION OF THE ENGINEER, TEMPORARY EDGE LINES MAY BE USED THROUGHOUT THE LENGTH OF THE SINGLE-LANE SECTION OF THE TEMPORARY DETOUR.

LEGEND

- CONSTRUCTION SIGN
- PCMS — PORTABLE CHANGEABLE MESSAGE SIGN
- TEMPORARY TRAFFIC BARRIER
- TEMPORARY TRAFFIC SIGNAL

Stantec

PROJECT NAME: CORINTH	
PROJECT NUMBER: BRO 1447(29)	
FILE NAME: ...\drawing\z01j292_bdr_ttc.dgn	PLOT DATE: 8/4/2014
PROJECT LEADER: G. BOGUE	DRAWN BY: E. ALLING
DESIGNED BY: E. ALLING	CHECKED BY: T. LUTHER
TRAFFIC CONTROL SHEET – TCS 1	SHEET 14 OF 57

8/4/2014 12:13:31 PM V:\1953\active\195301795\transportation\drawing\z01j292_bdr_ttc.dgn

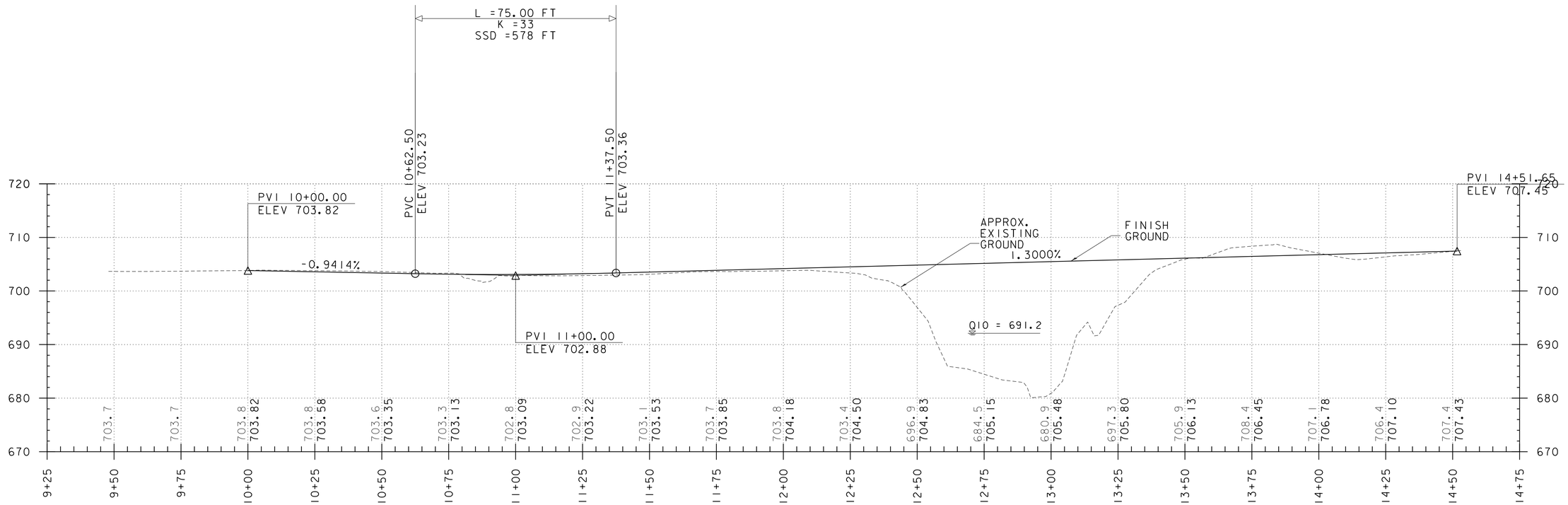

TEMPORARY DETOUR PROPOSED PROFILE

HORIZONTAL SCALE: 1' = 20' VERTICAL SCALE: 1" = 10'

NOTE:

ELEVATIONS SHOWN TO THE NEAREST TENTHS ARE EXISTING GROUND ALONG PROPOSED CENTERLINE.

ELEVATIONS SHOW TO THE NEAREST HUNDREDTHS ARE FINISHED GRADE ALONG PROPOSED CENTERLINE.

Stantec

PROJECT NAME: CORINTH	
PROJECT NUMBER: BRO 1447(29)	
FILE NAME: ...\drawing\z01j292_xs.dgn	PLOT DATE: 8/4/2014
PROJECT LEADER: G. BOGUE	DRAWN BY: T. LUTHER
DESIGNED BY: E. ALLING	CHECKED BY: G. BOGUE
DETOUR PROFILE SHEET – TPS 1	SHEET 15 OF 57

8/4/2014 12:13:32 PM V:\1953\active\195310795\transportation\drawing\z01j292_xs.dgn

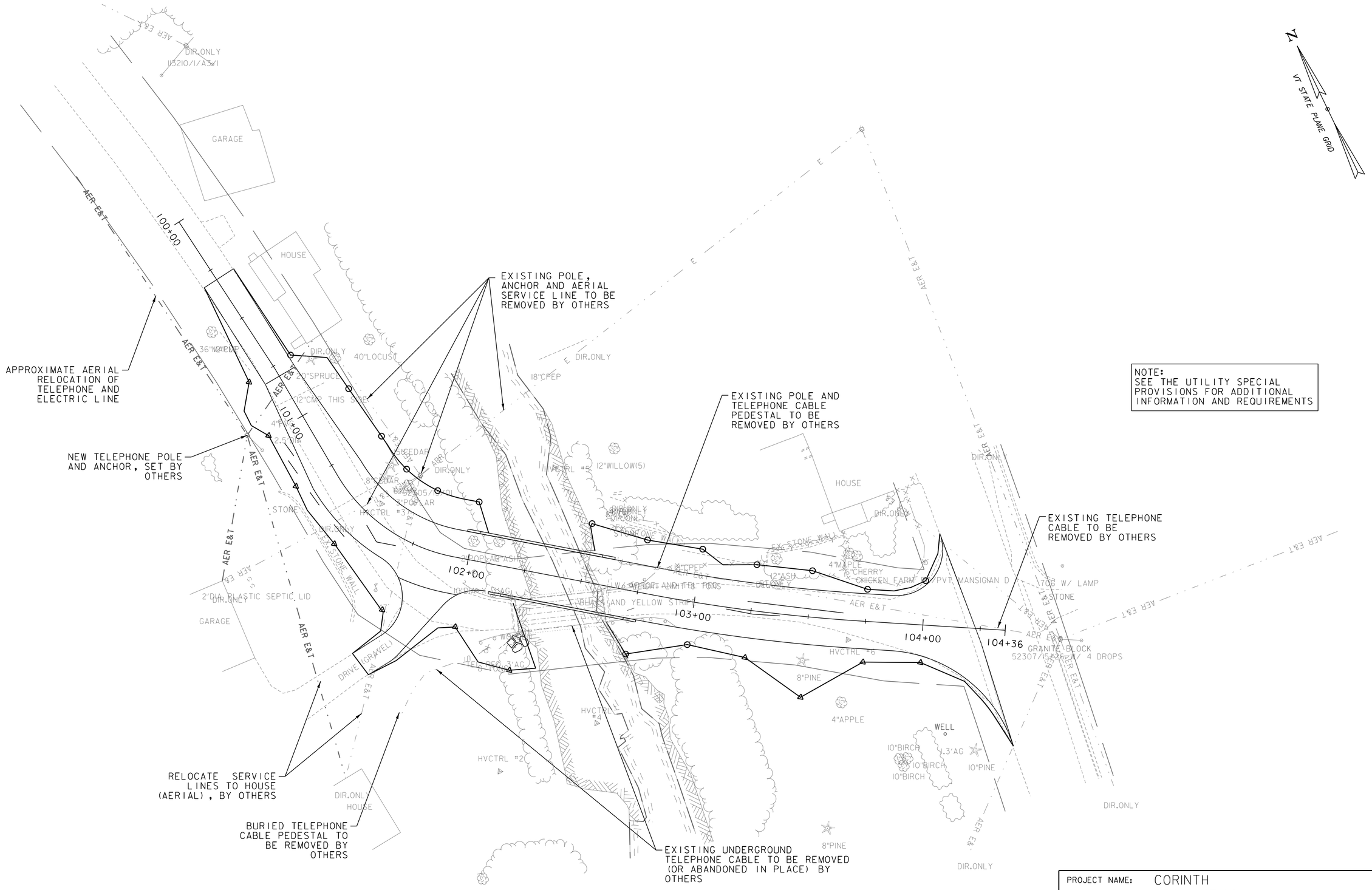

Stantec

PROJECT NAME: CORINTH	
PROJECT NUMBER: BRO 1447(29)	
FILE NAME: ...\drawing\z01j292_bdr_utl.dgn	PLOT DATE: 8/4/2014
PROJECT LEADER: G. BOGUE	DRAWN BY: E. ALLING
DESIGNED BY: M. CHENETTE	CHECKED BY: G. BOGUE
UTILITY LAYOUT SHEET – UTL 1	SHEET 16 OF 57

8/4/2014 12:13:37 PM V:\1953\active\195310795\transportation\drawing\z01j292_bdr_utl.dgn

ITEM 646.26 - 24 INCH STOP BAR

STA. 104+14, RT.

ITEM 646.21 - 4 INCH YELLOW LINE

STA. 103+60 - 104+25 (DOUBLE YELLOW CENTERLINE)

ITEM 675.50 - REMOVING SIGNS

AS SHOWN - (8)

ITEM 646.30 - LETTER OR SYMBOL

STA. 104+05, RT. - "STOP"

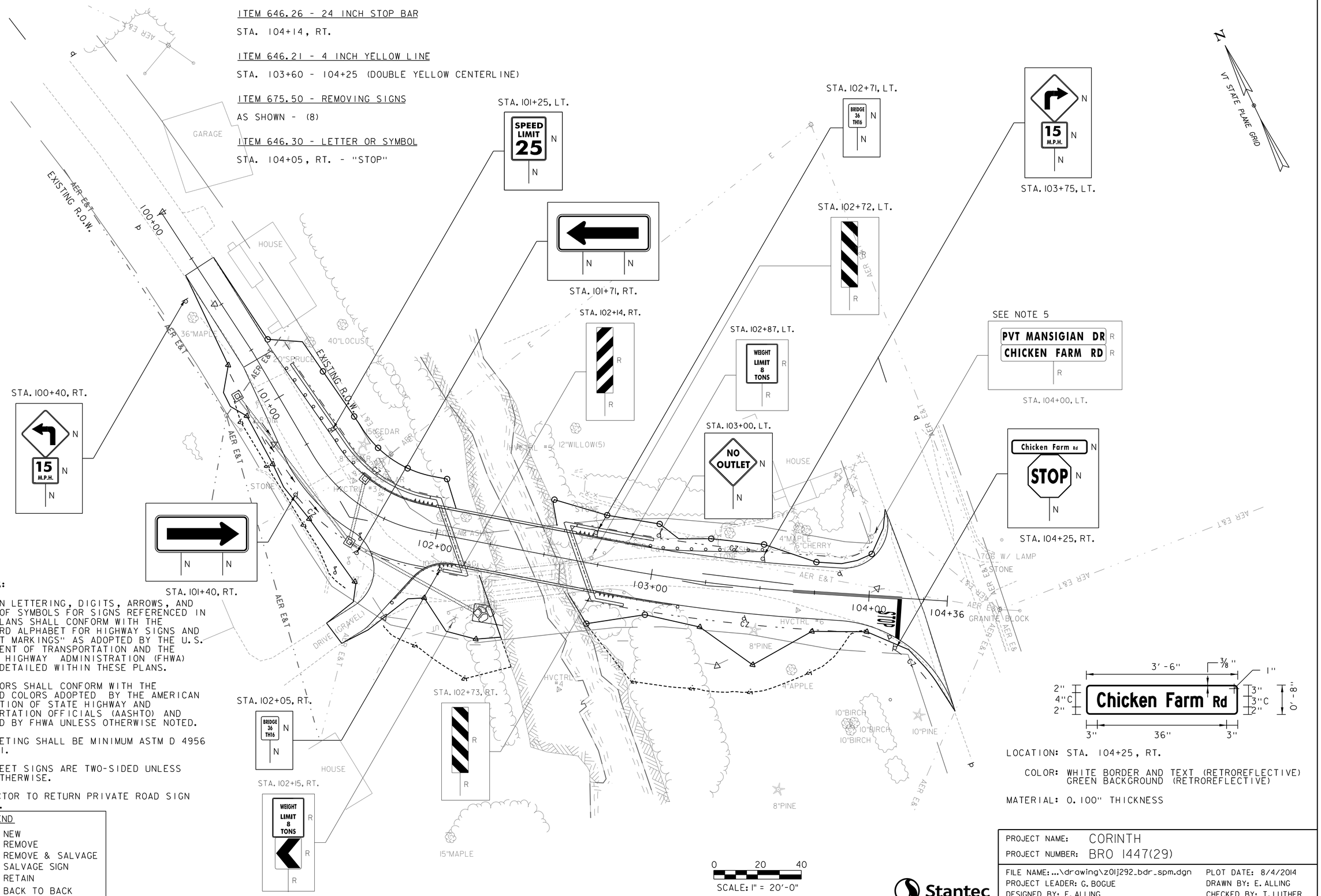

SIGN NOTES:

1. ALL SIGN LETTERING, DIGITS, ARROWS, AND DESIGN OF SYMBOLS FOR SIGNS REFERENCED IN THESE PLANS SHALL CONFORM WITH THE "STANDARD ALPHABET FOR HIGHWAY SIGNS AND PAVEMENT MARKINGS" AS ADOPTED BY THE U.S. DEPARTMENT OF TRANSPORTATION AND THE FEDERAL HIGHWAY ADMINISTRATION (FHWA) UNLESS DETAILED WITHIN THESE PLANS.
2. ALL COLORS SHALL CONFORM WITH THE STANDARD COLORS ADOPTED BY THE AMERICAN ASSOCIATION OF STATE HIGHWAY AND TRANSPORTATION OFFICIALS (AASHTO) AND APPROVED BY FHWA UNLESS OTHERWISE NOTED.
3. ALL SHEETING SHALL BE MINIMUM ASTM D 4956 TYPE III.
4. ALL STREET SIGNS ARE TWO-SIDED UNLESS NOTED OTHERWISE.
5. CONTRACTOR TO RETURN PRIVATE ROAD SIGN TO TOWN.

SIGN LEGEND

N	= NEW
R	= REMOVE
R&S	= REMOVE & SALVAGE
S	= SALVAGE SIGN
RET	= RETAIN
B-B	= BACK TO BACK

LOCATION: STA. 104+25, RT.

COLOR: WHITE BORDER AND TEXT (RETROREFLECTIVE)
GREEN BACKGROUND (RETROREFLECTIVE)

MATERIAL: 0.100" THICKNESS

PROJECT NAME: CORINTH	
PROJECT NUMBER: BRO 1447(29)	
FILE NAME: ...\drawing\z01j292_bdr_spm.dgn	PLOT DATE: 8/4/2014
PROJECT LEADER: G. BOGUE	DRAWN BY: E. ALLING
DESIGNED BY: E. ALLING	CHECKED BY: T. LUTHER
TRAFFIC SIGNS AND LINES LAYOUT - TSL 1	SHEET 17 OF 57

Stantec

8/4/2014 12:13:42 PM V:\1953\active\195310795\transportation\drawing\z01j292_bdr_spm.dgn

STATE OF VERMONT
AGENCY OF TRANSPORTATION

TRAFFIC SIGN SUMMARY SHEET

MILEMARKER, STATION, OR SIGN NUMBER	SIGN LEGEND	SIGN DIMENSIONS EA	WIDTH (in)	HEIGHT (in)	NEW & SALVAGED SIGNS "A"	"B"	SALV SIGN	SALV TIS	EXIST POST RETAIN	SALVAGE	NEW SIGN POSTS NO. OF POSTS	FLANGED CHANNEL lb/ft 1.12	2.0	3.0	SQUARE STEEL (in) lb/ft 1.75 (1.88)	2.0 (2.42)	2.5 (3.35)	ANCHOR	SLEEVE	TUBULAR ALUMINUM Ø (in) lb/ft 3.0 (1.3)	4.0 (1.7)	4.0 MOD (1.7)	TUBULAR STEEL Ø (in) FOUND-ATION	lb/ft 3.0 (7.6)	3.5 (9.0)	4.0 (10.8)	5.0 (14.6)	W-SHAPE STEEL FTG. SIZE 24"	30"	WEIGHT	POST SIZE	SIGN FRAME REQUIRED	REMARKS	SIGN DETAIL DETAIL IN SHSM BOOK	DETAIL ON SHEET NUMBER	STD. SHEET NUMBER
CHICKEN FARM ROAD T.H. 16																																				
100+40, RT		1 1	30 18	30 18	6.25 2.25						1					X		X															WI-1 WI3-1P	X X		
101+25, LT		1	24	30	5						1					X		X															R2-1	X		
101+40, RT		1	48	24	8						2					X		X															W1-6	X		
101+71, RT		1	48	24	8						2					X		X															W1-6	X		
102+05, RT		1	6	8	0.33						1				X			X															VD-701			T-42
102+71, LT		1	6	8	0.33						1				X			X															VD-701			T-42
103+00, LT		1	30	30	6.25						1						X	X															WI4-2	X		
103+75, LT		1 1	30 18	30 18	6.25 2.25						1					X		X															WI-1 WI3-1P	X X		
104+25, RT		1 1	42 30	8 30	2.33 6.25						1						X	X															D3-1 R1-1	X X	TSL 1	
												FT	FT	FT	FT 15.0	FT 95.5	FT 28.8		EA	LB	LB	LB		LB	LB	LB	LB								
TOTALS					SF 53.49	SF	EA.	SF				FT			FT 139.3					LB			EA.	LB				EA.	EA.	LB					

"SHSM"-STANDARD HIGHWAY SIGNS AND MARKINGS

FINAL POST LENGTHS ARE TO BE DETERMINED IN THE FIELD. POST SIZES ARE COMPUTED BASED ON INFORMATION FURNISHED ON THE STANDARD SHEETS AND THE VTRANS "SIGN POST DESIGN GUIDELINE."

TRAFFIC SIGN SUMMARY SHEET

PROJECT NAME: CORINTH
PROJECT NUMBER: BRO 1447(29)

FILE NAME: ...\drawing\z01j292_tss.dgn
PROJECT LEADER: G. BOGUE
DESIGNED BY: D. GROVER
TRAFFIC SIGN SUMMARY SHEET – TSS 1

PLOT DATE: 8/4/2014
DRAWN BY: D. GROVER
CHECKED BY: T. LUTHER
SHEET 18 OF 57

SOIL CLASSIFICATION

AASHTO

A1	Gravel and Sand
A3	Fine Sand
A2	Silty or Clayey Gravel and Sand
A4	Silty Soil - Low Compressibility
A5	Silty Soil - Highly Compressible
A6	Clayey Soil - Low Compressibility
A7	Clayey Soil - Highly Compressible

ROCK QUALITY DESIGNATION

R.Q.D. (%)	ROCK DESCRIPTION
<25	Very Poor
25 to 50	Poor
51 to 75	Fair
76 to 90	Good
>90	Excellent

SHEAR STRENGTH

UNDRAINED SHEAR STRENGTH IN P.S.F.	CONSISTENCY
<250	Very Soft
250-500	Soft
500-1000	Med. Stiff
1000-2000	Stiff
2000-4000	Very Stiff
>4000	Hard

CORRELATION GUIDE OF "N" TO DENSITY/CONSISTENCY

DENSITY (GRANULAR SOILS) N	DENSITY DESCRIPTIVE TERM	CONSISTENCY (COHESIVE SOILS) N	CONSISTENCY DESCRIPTIVE TERM
<5	Very Loose	<2	Very Soft
5-10	Loose	2-4	Soft
11-24	Med. Dense	5-8	Med. Stiff
25-50	Dense	9-15	Stiff
>50	Very Dense	16-30	Very Stiff
		31-60	Hard
		>60	Very Hard

COMMONLY USED SYMBOLS

▼	Water Elevation
⊗	Standard Penetration Boring
⊕	Auger Boring
⊙	Rod Sounding
S	Sample
N	Standard Penetration Test Blow Count Per Foot For: 2" O.D. Sampler 1 3/8" I.D. Sampler Hammer Weight Of 140 Lbs. Hammer Fall Of 30"
VS	Field Vane Shear Test
US	Undisturbed Soil Sample
B	Blast
DC	Diamond Core
MD	Mud Drill
WA	Wash Ahead
HSA	Hollow Stem Auger
AX	Core Size 1 1/8"
BX	Core Size 1 5/8"
NX	Core Size 2 1/8"
M	Double Tube Core Barrel Used
LL	Liquid Limit
PL	Plastic Limit
PI	Plasticity Index
NP	Non Plastic
w	Moisture Content (Dry Wgt. Basis)
D	Dry
M	Moist
MTW	Moist To Wet
W	Wet
Sat	Saturated
Bo	Boulder
Gr	Gravel
Sa	Sand
Si	Silt
Cl	Clay
HP	Hardpan
Le	Ledge
NLTD	No Ledge To Depth
CNPF	Can Not Penetrate Further
TLOB	Top of Ledge Or Boulder
NR	No Recovery
Rec.	Recovery
%Rec.	Percent Recovery
RQD	Rock Quality Designation
CBR	California Bearing Ratio
<	Less Than
>	Greater Than
R	Refusal (N > 100)
VTSPG	NAD83 - See Note 7

COLOR

blk	Black	pnk	Pink
bl	Blue	pu	Purple
brn	Brown	rd	Red
dk	Dark	tn	Tan
gry	Gray	wh	White
gn	Green	yel	Yellow
lt	Light	mltc	Multicolored
or	Orange		

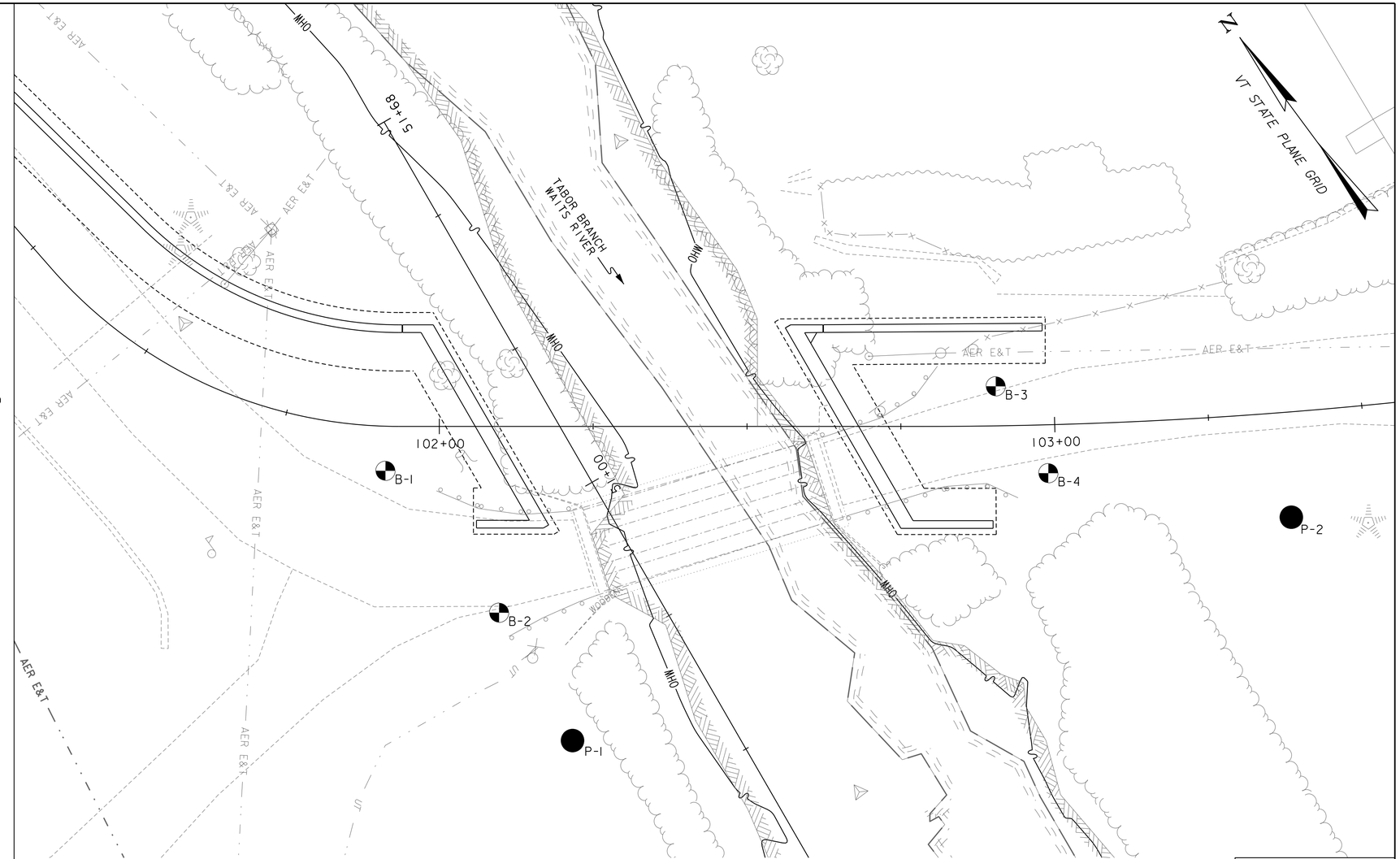

BORING LAYOUT

SCALE: 1" = 10'-0"

0 10 20

LEGEND:

- BRIDGE BORING
- PROBE

BORING CHART

BORING NUMBER	SURVEY STATION	OFFSET	GROUND ELEVATION
B-1	101+91.42	7.21' RT	702.7
B-2	102+09.71	30.25' RT	703.0
B-3	102+90.38	6.46' LT	704.2
B-4	102+98.75	7.83' RT	704.1
P-1	102+21.64	51.00' RT	702.0
P-2	103+37.46	17.00' RT	707.3

DEFINITIONS (AASHTO)

BEDROCK (LEDGE) - Rock in its native location of indefinite thickness.

BOULDER - A rock fragment with an average dimension > 12 inches.

COBBLE - Rock fragments with an average dimension between 3 and 12 inches.

GRAVEL - Rounded particles of rock < 3" and > 0.0787" (#10 sieve).

SAND - Particles of rock < 0.0787" (#10 sieve) and > 0.0029" (#200 sieve).

SILT - Soil < 0.0029" (#200 sieve), non or slightly plastic and exhibits no strength when air-dried.

CLAY - Fine grained soil, exhibits plasticity when moist and considerable strength when air-dried.

VARVED - Alternate layers of silt and clay.

HARDPAN - Extremely dense soil, cemented layer, not softened when wet.

MUCK - Soft organic soil (containing > 10% organic material.

MOISTURE CONTENT - Weight of water divided by dry weight of soil.

FLOWING SAND - Granular soil so saturated (loose) that it flows into drill casing during extraction of wash rod.

STRIKE - Angle from magnetic north to line of intersection of bed with a horizontal plane.

DIP - Inclination of bed with a horizontal plane.

GENERAL NOTES

1. The subsurface explorations shown herein were made in February 2013 by New Hampshire Boring.
2. Soil and rock classifications, properties and descriptions are based on engineering interpretation from available subsurface information by Stantec and may not necessarily reflect actual variations in subsurface conditions that may be encountered between individual boring or sample locations.
3. Observed water levels and/or conditions indicated are as recorded at the time of exploration and may vary according to the prevailing rainfall, methods of exploration and other factors.
4. Engineering judgment was exercised in preparing the subsurface information presented herein. Analysis and interpretation of subsurface data was performed and interpreted for Stantec design and estimating purposes. Presentation of the information in the Contract is intended to provide the Contractor access to the same data available to the Agency. The subsurface information is presented in good faith and is not intended as a substitute for personal investigation, independent interpretation, independent analysis or judgment by the Contractor.
5. Pictorial structure details shown on the boring plan layout or soils profile are for illustrative purposes only and may not accurately portray final contract details.
6. Terminology used on boring logs to describe the hardness, degree of weathering, and spacing of fractures, joints and other discontinuities in the bedrock is defined in the AASHTO Manual on Subsurface Investigations, 1988.
7. Northing and Easting coordinates are shown in Vermont State Plane Grid North American Datum 1983 in meters and survey feet.

Stantec

PROJECT NAME: CORINTH

PROJECT NUMBER: BRO 1447(29)

FILE NAME: ...\z01j292_bdr_bor layout.dgn
PROJECT LEADER: G. BOGUE
DESIGNED BY: M. CHENETTE
BORING INFORMATION SHEET

PLOT DATE: 8/4/2014
DRAWN BY: E. ALLING
CHECKED BY: G. BOGUE
SHEET 19 OF 57

8/4/2014 12:13:44 PM V:\1953\active\195310795\transportation\drawing\z01j292_bdr_bor layout.dgn

STATE OF VERMONT
AGENCY OF TRANSPORTATION
MATERIALS & RESEARCH SECTION
SUBSURFACE INFORMATION

BORING LOG

CORINTH
BRO 1447(29)
Bridge #36

Boring No.: **B-1**
Page No.: 1 of 1
Pin No.:
Checked By: TAD

Boring Crew: NH Boring, Derry, NH, Burke (Stantec)
Date Started: 2/22/13 Date Finished: 2/22/13
VTSPG NAD83: N 570298.60 ft E 1713251.31 ft
Station: 101+91.41 Offset: 7.21 RT
Ground Elevation: 702.7 ft

	Casing	Sampler
Type:	H.S.A.	SS
I.D.:	4.25 in	1.38 in
Hammer Wt:	N.A.	140
Hammer Fall:	N.A.	30
Hammer/Rod Type:	Safety/N	
Rig:	CME 750 <<SUB>><<SUB>> = 1	

Groundwater Observations

Date	Depth (ft)	Notes

ABUTMENT I
TOP OF FOOTING
EL. 694.00

Depth (ft)	Strata (1)	CLASSIFICATION OF MATERIALS (Description)	Run (Dip deg.)	Core Rec. % (RQD %)	Drill Rate minutes/ft	Blows/6" (N Value)	Moisture Content %	Gravel %	Sand %	Fines %
		Not Sampled, Soil was frozen topsoil								
		Visual Classification, Sa, brn, Moist, Rec. = 0.7 ft				16-9-7-7 (16)				
2.5		Visual Classification, SiSa, brn, Moist, Rec. = 0.7 ft								
		A-2-4, SiSa, brn, Moist, Rec. = 1.0 ft				13-15-13-9 (28)	15.7	9.2	63.8	27.0
5.0		Visual Classification, SiSa, Dk/brn, Moist, Rec. = 1.5 ft				2-2-1-1 (3)				
		A-2-4, SiSa, Dk/brn, Moist, Rec. = 0.5 ft					26.9	6.2	62.8	31.0
7.5		A-8, Peat, organic content = 18.4%, Dk/brn, Moist, Rec. = 0.8 ft				3-4-100/1 (R)	106.4			
		Visual Classification, SiSa, Dk/gry, Moist, Rec. = 0.1 ft				Top of Bedrock @ 8.1 ft				
		Probable weathered rock, 8.1 ft - 8.5 ft								
10.0		8.5 ft - 13.5 ft, Gry, Phyllite, Hard, Fresh, Fair rock, NXDC, Joints are low angle, closely spaced, smooth to rough, and tight. RMR = 44	1 (30)	95 (65)	7 5 6 6 7					
12.5										
15.0		13.5 ft - 18.5 ft, Gry, Phyllite, Hard, Fresh, Fair rock, NXDC, Joints are low angle, close to moderately close spaced, smooth, and tight. RMR = 51	2 (30)	97 (97)	6 6 7 7 5					
17.5										
		Hole stopped @ 18.5 ft								

Notes:
1. Stratification lines represent approximate boundary between material types. Transition may be gradual.
2. <<SUB>><<SUB>> is the hammer energy correction factor.
3. Water level readings have been made at times and under conditions stated. Fluctuations of groundwater may occur due to other factors than those present at the time measurements were made.

BORING LOG_VTRANS_CORINTHVT.GPJ VERMONT AOT.GDT 3/26/13

STATE OF VERMONT
AGENCY OF TRANSPORTATION
MATERIALS & RESEARCH SECTION
SUBSURFACE INFORMATION

BORING LOG

CORINTH
BRO 1447(29)
Bridge #36

Boring No.: **B-2**
Page No.: 1 of 1
Pin No.:
Checked By: TAD

Boring Crew: NH Boring, Derry, NH, Burke (Stantec)
Date Started: 2/21/13 Date Finished: 2/21/13
VTSPG NAD83: N 570269.09 ft E 1713252.43 ft
Station: 102+09.71 Offset: 30.25 RT
Ground Elevation: 703.0 ft

	Casing	Sampler
Type:	H.S.A.	SS
I.D.:	4.25 in	1.38 in
Hammer Wt:	N.A.	140
Hammer Fall:	N.A.	30
Hammer/Rod Type:	Safety/N	
Rig:	CME 750 <<SUB>><<SUB>> = 1	

Groundwater Observations

Date	Depth (ft)	Notes

ABUTMENT I
TOP OF FOOTING
EL. 694.00

Depth (ft)	Strata (1)	CLASSIFICATION OF MATERIALS (Description)	Blows/6" (N Value)	Moisture Content %	Gravel %	Sand %	Fines %
		Not Sampled, Frozen soil					
		Visual Classification, Sa, gry, Moist, Rec. = 1.7 ft	29-40-53-68 (93)				
2.5							
		Visual Classification, GrSa, gry, Moist, Rec. = 0.2 ft	29-21-22-24 (43)				
		Visual Classification, Peat, Dk/brn, Moist, Rec. = 0.8 ft					
5.0		Visual Classification, Peat, Dk/brn, Moist, Rec. = 0.2 ft	2-1-1-2 (2)				
7.5		Visual Classification, Peat, Dk/brn, Moist, Rec. = 0.5 ft	2-2-1-2 (3)				
10.0		A-8, Peat, organic content = 8.6%, Dk/brn, Moist, Rec. = 2.0 ft	1-2-1-2 (3)	58.3			
12.5		Visual Classification, Peat, Dk/brn, Moist, Rec. = 1.5 ft	3-3-4-8 (7)				
		A-1-b, SiSa, gry, Moist, Rec. = 0.3 ft		27.1	15.0	61.0	24.0
15.0		No Recovery, Rec. = 0.0 ft, 15.0 ft - 15.1 ft	100/1 (R)				
		Top of Bedrock @ 15.1 ft					
		Hole stopped @ 15.1 ft					
17.5							

Remarks:
Auger refusal on probable bedrock at 15.1 feet below ground surface.

Notes:
1. Stratification lines represent approximate boundary between material types. Transition may be gradual.
2. <<SUB>><<SUB>> is the hammer energy correction factor.
3. Water level readings have been made at times and under conditions stated. Fluctuations of groundwater may occur due to other factors than those present at the time measurements were made.

BORING LOG_VTRANS_CORINTHVT.GPJ VERMONT AOT.GDT 3/26/13

8/4/2014 12:13:44 PM V:\1953\active\195310795\transportation\drawing\z01j292_bor1.dgn

Stantec

PROJECT NAME: CORINTH
PROJECT NUMBER: BRO 1447(29)

FILE NAME: ...\drawing\z01j292_bor1.dgn
PROJECT LEADER: G. BOGUE
DESIGNED BY: M. CHENETTE
BORING LOG 1

PLOT DATE: 8/4/2014
DRAWN BY: J. SOTER
CHECKED BY: G. BOGUE
SHEET 20 OF 57

STATE OF VERMONT
AGENCY OF TRANSPORTATION
MATERIALS & RESEARCH SECTION
SUBSURFACE INFORMATION

BORING LOG

CORINTH
BRO 1447(29)
Bridge #36

Boring No.: **B-3**
Page No.: 1 of 1
Pin No.:
Checked By: TAD

Boring Crew: NH Boring, Derry, NH, Burke (Stantec)
Date Started: 2/22/13 Date Finished: 2/22/13
VTSPG NAD83: N 570250.62 ft E 1713339.17 ft
Station: 102+90.38 Offset: 6.46 LT
Ground Elevation: 704.2 ft

	Casing	Sampler
Type:	H.S.A.	SS
I.D.:	4.25 in	1.38 in
Hammer Wt:	N.A.	140
Hammer Fall:	N.A.	30
Hammer/Rod Type:	Safety/N	
Rig:	CME 750 <<SUB>><<SUB>> = 1	

Groundwater Observations

Date	Depth (ft)	Notes

Depth (ft)	Strata (1)	CLASSIFICATION OF MATERIALS (Description)	Blows/6" (N Value)	Moisture Content %	Gravel %	Sand %	Fines %
		Not Sampled, Frozen soil					
		Visual Classification, GrSa, brn, Moist, Rec. = 1.3 ft	27-53-76-59 (129)				
2.5							
		A-2-4, SiSa, brn, Moist, Rec. = 1.2 ft	37-23-36-33 (59)	24.4	7.0	66.0	27.0
5.0		Visual Classification, SiSa, brn, Moist, Rec. = 1.3 ft	4-3-3-5 (6)				
7.5		Visual Classification, GrSiSa, Dark brown, Moist, Rec. = 0.7 ft	7-9-13-22 (22)				
		Visual Classification, Sa, tan, Wet, Rec. = 1.5 ft	8-8-8-20 (16)				
10.0							
		Visual Classification, Sa, brn, Wet, Rec. = 0.2 ft	100/2 (R)				
12.5							
		Hole stopped @ 13.5 ft	Top of Bedrock @ 13.5 ft				
15.0		Remarks: Auger refusal on probable bedrock at 13.5 feet below ground surface.					
17.5							

ABUTMENT 2
TOP OF FOOTING
EL. 694.00

Notes:
1. Stratification lines represent approximate boundary between material types. Transition may be gradual.
<<SUB>><<SUB>> Is the hammer energy correction factor.
3. Water level readings have been made at times and under conditions stated. Fluctuations of groundwater may occur due to other factors than those present at the time measurements were made.

BORING LOG VTRANS_CORINTHVT.GPJ VERMONT AOT.GDT 3/26/13

STATE OF VERMONT
AGENCY OF TRANSPORTATION
MATERIALS & RESEARCH SECTION
SUBSURFACE INFORMATION

BORING LOG

CORINTH
BRO 1447(29)
Bridge #36

Boring No.: **B-4**
Page No.: 1 of 1
Pin No.:
Checked By: TAD

Boring Crew: NH Boring, Derry, NH, Burke (Stantec)
Date Started: 2/21/13 Date Finished: 2/21/13
VTSPG NAD83: N 570234.19 ft E 1713337.64 ft
Station: 102+98.75 Offset: 7.83 RT
Ground Elevation: 704.1 ft

	Casing	Sampler
Type:	H.S.A.	SS
I.D.:	4.25 in	1.38 in
Hammer Wt:	N.A.	140
Hammer Fall:	N.A.	30
Hammer/Rod Type:	Safety/N	
Rig:	CME 750 <<SUB>><<SUB>> = 1	

Groundwater Observations

Date	Depth (ft)	Notes

Depth (ft)	Strata (1)	CLASSIFICATION OF MATERIALS (Description)	Run (Dip deg.)	Core Rec. % (RQD %)	Drill Rate minutes/ft	Blows/6" (N Value)	Moisture Content %	Gravel %	Sand %	Fines %
		Not Sampled, Frozen soil								
		Visual Classification, SiSa, brn, Moist, Rec. = 1.5 ft				33-34-27-7 (61)				
2.5										
		A-2-4, SiSa, brn, Moist, Rec. = 0.7 ft				8-20-15-10 (35)	17.9	6.4	63.6	30.0
5.0		Visual Classification, GrSa, Dk/brn, Moist, Rec. = 0.3 ft				4-100/4 (R)				
		Probable weathered rock, Rec. = 0.2 ft, 5.5 ft - 6.0 ft								
		6.0 ft - 11.0 ft, Gry, Phyllite, Hard, Fresh, Fair rock, NXDC, Joints are low angle, closely spaced, smooth to rough, and tight. RMR = 64	1 (30)	90 (59)	6	Top of Bedrock @ 6.0 ft				
7.5					5					
					6					
					5					
10.0					6					
		11.0 ft - 16.0 ft, Gry, Phyllite, Hard, Fresh, Good rock, NXDC, Joints are low angle, moderately spaced, smooth, and tight. RMR = 47	2 (30)	97 (97)	7					
12.5					7					
					6					
					7					
15.0					7					
		Hole stopped @ 16.0 ft								
17.5										

ABUTMENT 2
TOP OF FOOTING
EL. 694.00

Notes:
1. Stratification lines represent approximate boundary between material types. Transition may be gradual.
<<SUB>><<SUB>> Is the hammer energy correction factor.
3. Water level readings have been made at times and under conditions stated. Fluctuations of groundwater may occur due to other factors than those present at the time measurements were made.

BORING LOG VTRANS_CORINTHVT.GPJ VERMONT AOT.GDT 3/26/13

Stantec

PROJECT NAME: CORINTH
PROJECT NUMBER: BRO 1447(29)

FILE NAME: ...\drawing\z01j292_bor2.dgn
PROJECT LEADER: G. BOGUE
DESIGNED BY: M. CHENETTE
BORING LOG 2

PLOT DATE: 8/4/2014
DRAWN BY: J. SOTER
CHECKED BY: G. BOGUE
SHEET 21 OF 57

8/4/2014 12:13:45 PM V:\1953\active\195310795\transportation\drawing\z01j292_bor2.dgn

STATE OF VERMONT
AGENCY OF TRANSPORTATION
MATERIALS & RESEARCH SECTION
SUBSURFACE INFORMATION

BORING LOG

CORINTH
BRO 1447(29)
Bridge #36

Boring No.: **P-1**
Page No.: 1 of 1
Pin No.:
Checked By: TAD

Boring Crew: NH Boring, Derry, NH, Burke (Stantec)
Date Started: 2/21/13 Date Finished: 2/21/13
VTSPG NAD83: N 570245.30 ft E 1713249.67 ft
Station: 102+21.64 Offset: 51.00 RT
Ground Elevation: 702.0 ft

	Casing	Sampler
Type:	H.S.A.	
I.D.:	4.25 in	
Hammer Wt:	N.A.	N.A.
Hammer Fall:	N.A.	N.A.
Hammer/Rod Type:		
Rig:	CME 750 <<SUB>><<SUB>> =	

Groundwater Observations

Date	Depth (ft)	Notes

Depth (ft)	Strata (1)	CLASSIFICATION OF MATERIALS (Description)	Blows/6" (N Value)	Moisture Content %	Gravel %	Sand %	Fines %
2.5							
5.0							
7.5							
10.0							
12.5							
15.0		Top of Bedrock @ 14.5 ft					
17.5		Remarks: Advanced auger probe to refusal on probable bedrock at 14.5 feet below the ground surface.					

Notes:
1. Stratification lines represent approximate boundary between material types. Transition may be gradual.
<<SUB>><<SUB>> is the hammer energy correction factor.
3. Water level readings have been made at times and under conditions stated. Fluctuations of groundwater may occur due to other factors than those present at the time measurements were made.

BORING LOG VTRANS_CORINTHVT.GPJ VERMONT AOT.GDT 3/26/13

STATE OF VERMONT
AGENCY OF TRANSPORTATION
MATERIALS & RESEARCH SECTION
SUBSURFACE INFORMATION

BORING LOG

CORINTH
BRO 1447(29)
Bridge #36

Boring No.: **P-2**
Page No.: 1 of 1
Pin No.:
Checked By: TAD

Boring Crew: NH Boring, Derry, NH, Burke (Stantec)
Date Started: 2/21/13 Date Finished: 2/21/13
VTSPG NAD83: N 570204.94 ft E 1713365.12 ft
Station: 103+37.46 Offset: 17.00 RT
Ground Elevation: 707.3 ft

	Casing	Sampler
Type:	H.S.A.	
I.D.:	4.25 in	
Hammer Wt:	N.A.	N.A.
Hammer Fall:	N.A.	N.A.
Hammer/Rod Type:		
Rig:	CME 750 <<SUB>><<SUB>> =	

Groundwater Observations

Date	Depth (ft)	Notes

Depth (ft)	Strata (1)	CLASSIFICATION OF MATERIALS (Description)	Blows/6" (N Value)	Moisture Content %	Gravel %	Sand %	Fines %
2.5							
5.0		Top of Bedrock @ 3.2 ft Remarks: Advanced auger probe to refusal on probable bedrock at 3.2 feet below the ground surface.					
7.5							
10.0							
12.5							
15.0							
17.5							

Notes:
1. Stratification lines represent approximate boundary between material types. Transition may be gradual.
<<SUB>><<SUB>> is the hammer energy correction factor.
3. Water level readings have been made at times and under conditions stated. Fluctuations of groundwater may occur due to other factors than those present at the time measurements were made.

BORING LOG VTRANS_CORINTHVT.GPJ VERMONT AOT.GDT 3/26/13

Stantec

PROJECT NAME: CORINTH
PROJECT NUMBER: BRO 1447(29)

FILE NAME: ...\drawing\z01j292_bor3.dgn
PROJECT LEADER: G. BOGUE
DESIGNED BY: M. CHENETTE
BORING LOG 3

PLOT DATE: 8/4/2014
DRAWN BY: J. SOTER
CHECKED BY: G. BOGUE
SHEET 22 OF 57

8/4/2014 12:13:46 PM V:\1953\active\195310795\transportation\drawing\z01j292_bor3.dgn

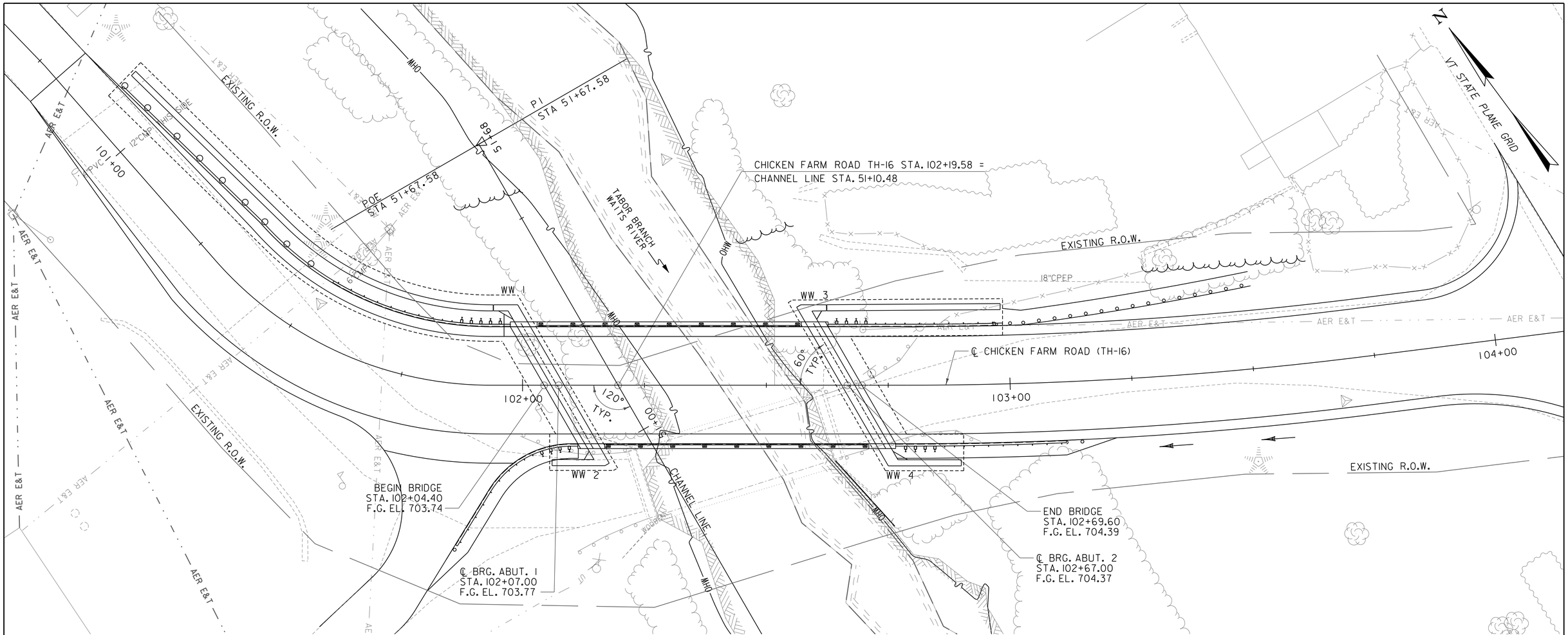

PLAN

SCALE: 1" = 10'-0"

0 10 20

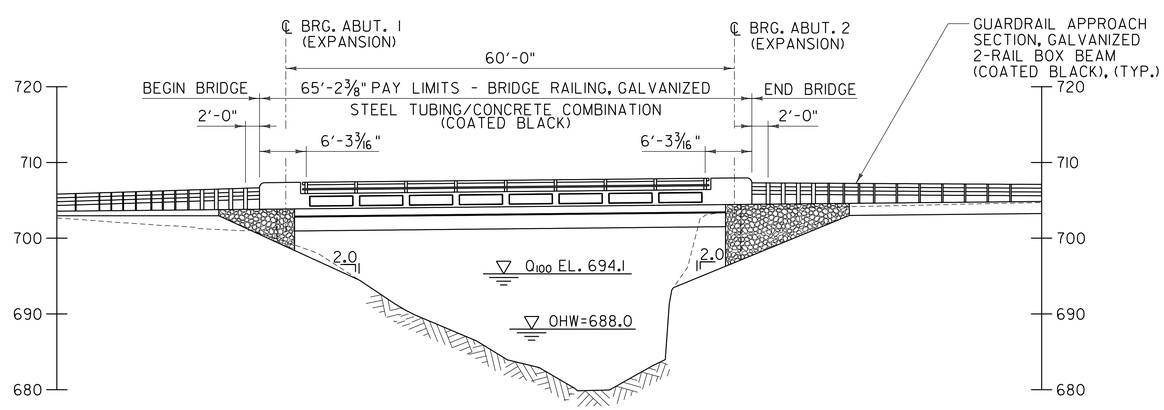

ELEVATION

SCALE: 1" = 10'-0"

0 10 20

Stantec

PROJECT NAME: CORINTH	
PROJECT NUMBER: BRO 1447(29)	
FILE NAME: ...\drawing\z01j292_bdr_pe.dgn	PLOT DATE: 8/4/2014
PROJECT LEADER: G. BOGUE	DRAWN BY: J. SOTER
DESIGNED BY: M. CHENETTE	CHECKED BY: G. BOGUE
PLAN AND ELEVATION	SHEET 23 OF 57

8/4/2014 12:13:47 PM V:\1953\active\195310795\transportation\drawing\z01j292_bdr_pe.dgn

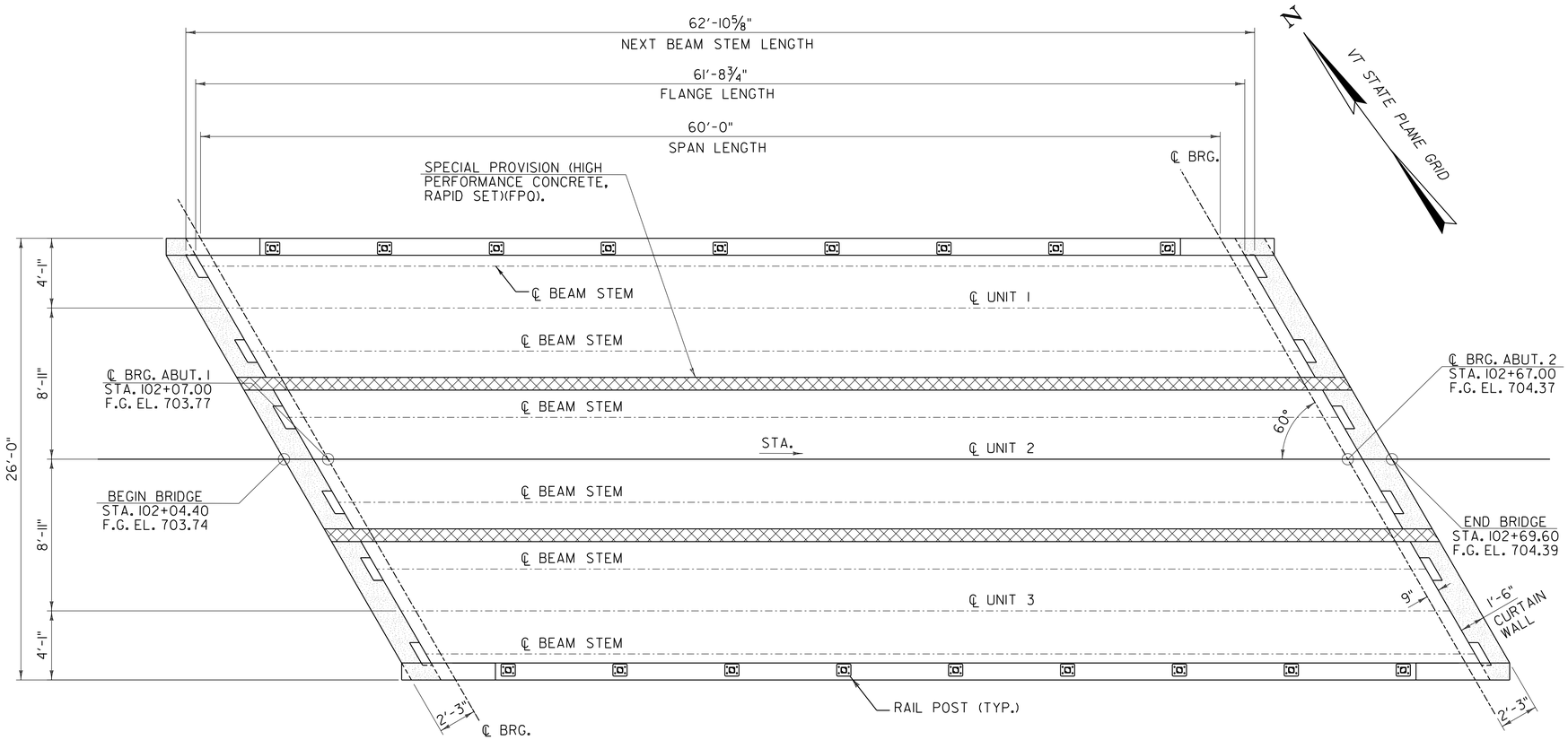

PLAN

SCALE: ¼" = 1'-0"

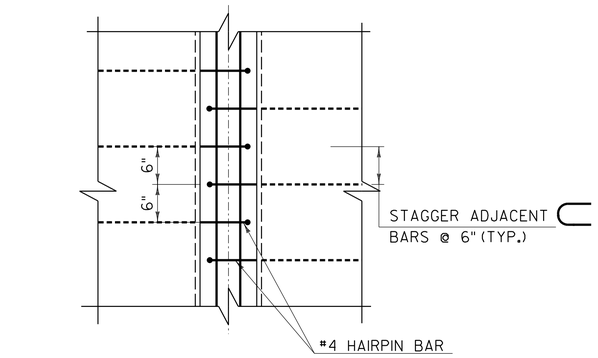

PLAN

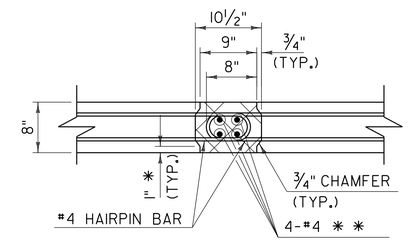

SECTION

FLANGE CONNECTION DETAILS

SCALE: 1" = 1'-0"

SPECIAL PROVISION (HIGH PERFORMANCE CONCRETE, RAPID SET)(FPQ).

✱ DIMENSIONS ARE TO KEY IN JOINT.

✱✱ FOUR #4 BARS SHALL BE PLACED AS SHOWN ALONG ENTIRE LENGTH OF JOINT. PAYMENT SHALL BE INCIDENTAL TO SPECIAL PROVISION (PRE-STRESSED CONCRETE NEXT D BEAMS)(NEXT 28D).

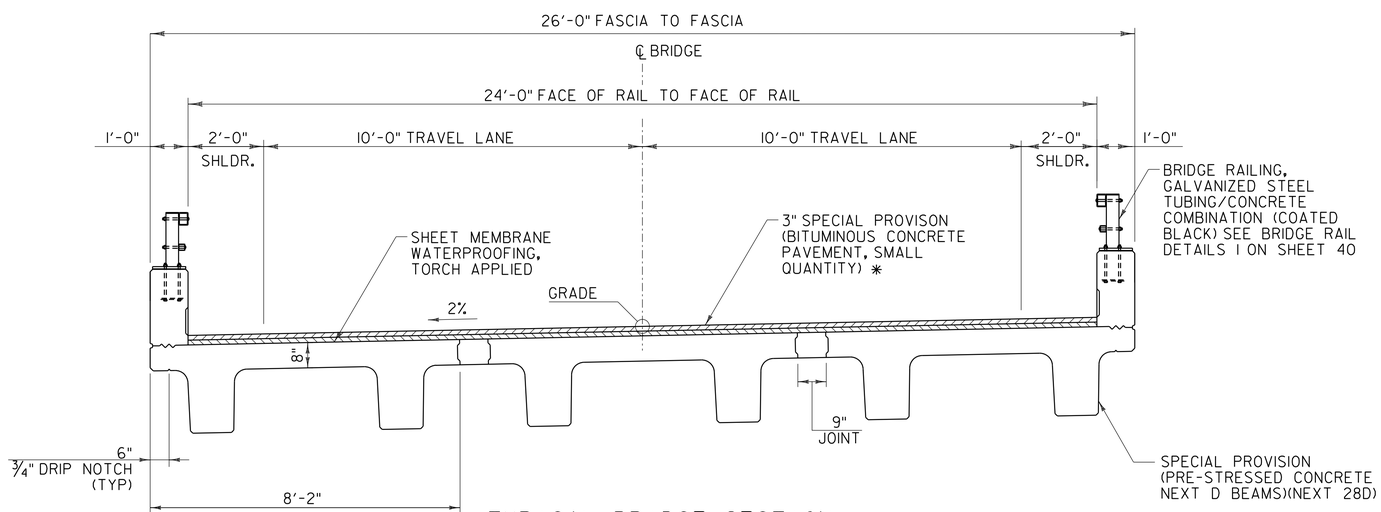

✱3" TYPE IVS (TWO 1½" LIFTS)

TYPICAL BRIDGE SECTION

SCALE: ½" = 1'-0"

Stantec

PROJECT NAME: CORINTH	
PROJECT NUMBER: BRO 1447(29)	
FILE NAME: ...\drawing\z01j292_framing.dgn	PLOT DATE: 8/4/2014
PROJECT LEADER: G. BOGUE	DRAWN BY: L. BUXTON
DESIGNED BY: G. BOGUE	CHECKED BY: T. KNIGHT
FRAMING PLAN	SHEET 24 OF 57

8/4/2014 12:13:49 PM V:\1953\active\195310795\transportation\drawing\z01j292_framing.dgn

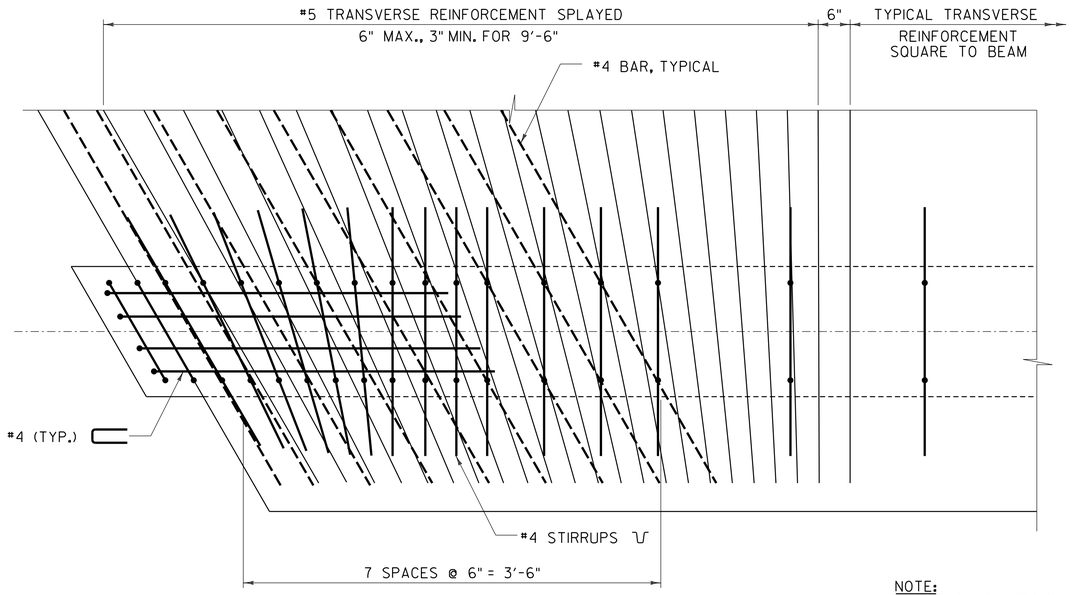

PLAN

NOTE:
LONGITUDINAL REINFORCEMENT
NOT SHOWN FOR CLARITY.

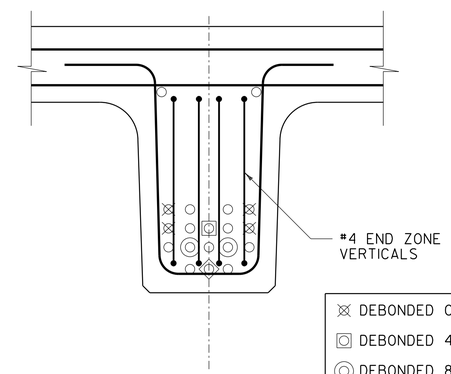

END SECTION
SCALE 1½" = 1'-0"

⊠ DEBONDED 0'-6"	OPTIONAL
▣ DEBONDED 4'	
◎ DEBONDED 8'	
◇ DEBONDED 12'	

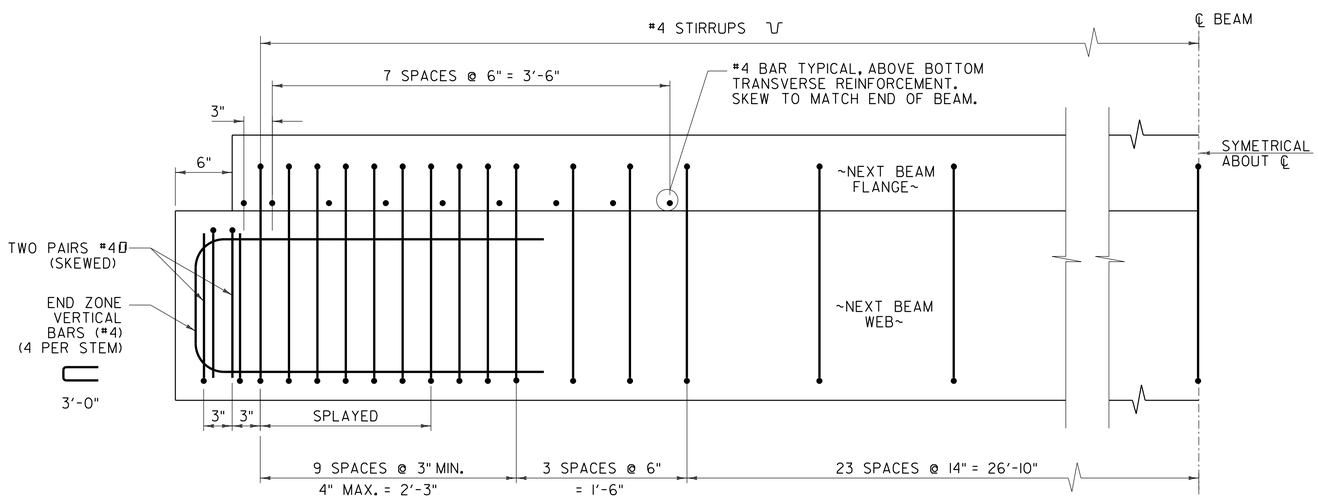

ELEVATION

ADDITIONAL END BEAM REINFORCEMENT
SCALE 1½" = 1'-0"

NOTE:
TYPICAL DECK REINFORCING AND NEXT BEAM
PRESTRESSING TENDONS NOT SHOWN FOR CLARITY

Stantec

PROJECT NAME: CORINTH	
PROJECT NUMBER: BRO 1447(29)	
FILE NAME: ...\z01j292_next_beam_dets.dgn	PLOT DATE: 8/4/2014
PROJECT LEADER: G. BOGUE	DRAWN BY: L. BUXTON
DESIGNED BY: G. BOGUE	CHECKED BY: T. KNIGHT
NEXT BEAM DETAILS 1	SHEET 25 OF 57

8/4/2014 12:13:50 PM V:\1953\active\195310795\transportation\drawing\z01j292_next_beam_dets.dgn

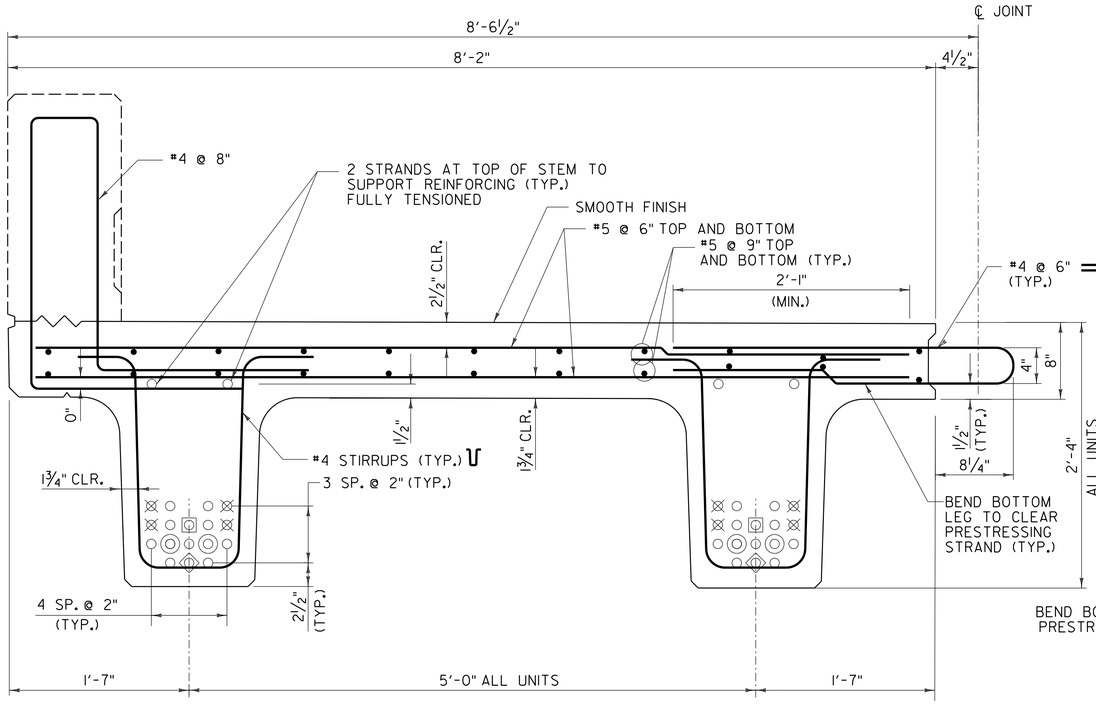

UNIT 1

TYPICAL BEAM REINFORCING

SCALE 1½" = 1'-0"

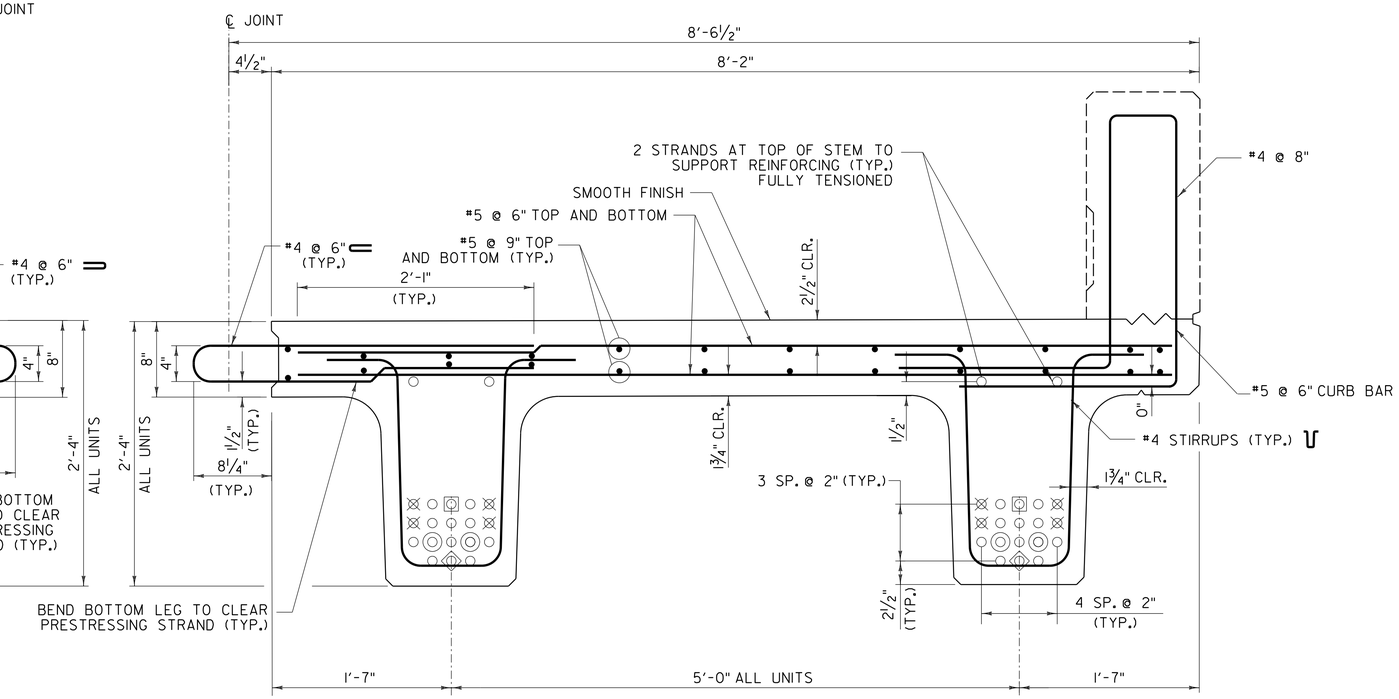

UNIT 3

TYPICAL BEAM REINFORCING

SCALE 1½" = 1'-0"

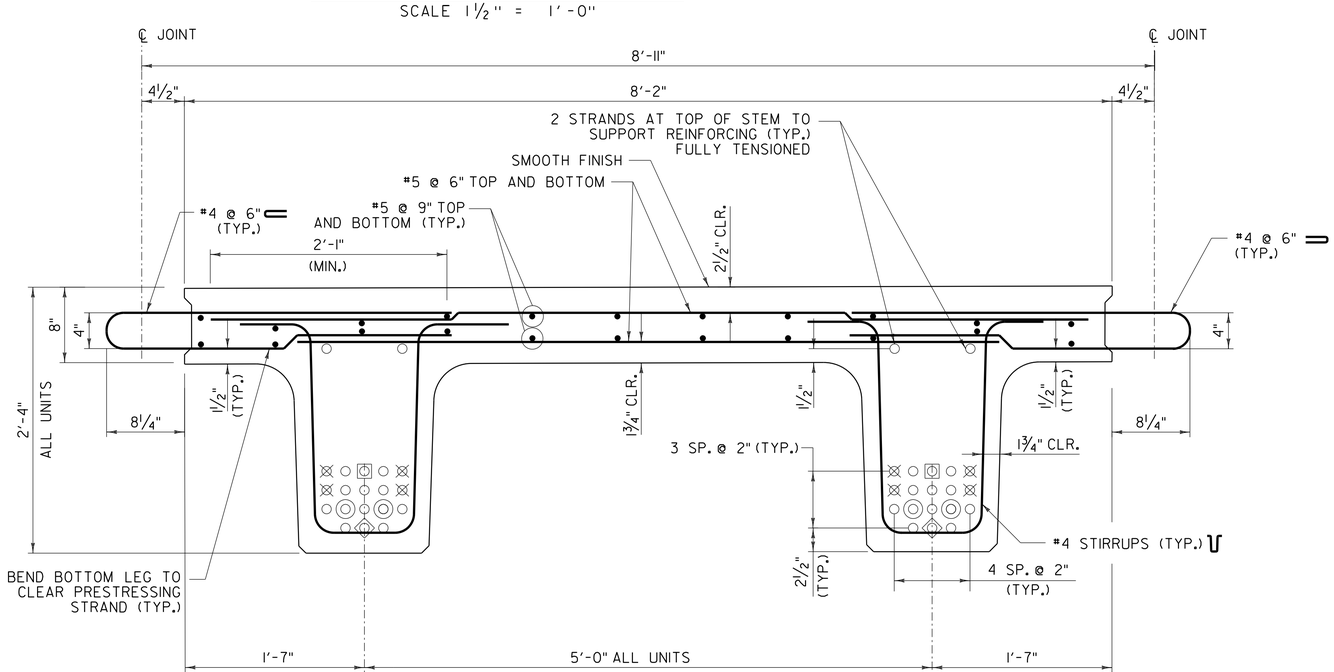

UNIT 2

TYPICAL BEAM REINFORCING

SCALE 1½" = 1'-0"

NOTES:

1. LEAVE SIX STRANDS 1'-6" LONG AT BOTH ENDS OF BEAM. SEE PRECAST CURTAIN WALL REINFORCING SECTION A-A ON SHEET 27.
2. REINFORCING STEEL SHALL MEET THE REQUIREMENTS OF SECTION 507 FOR LEVEL II REINFORCING STEEL.

Stantec

PROJECT NAME: CORINTH	
PROJECT NUMBER: BRO 1447(29)	
FILE NAME: ...\z01j292_next_beam_dets.dgn	PLOT DATE: 8/4/2014
PROJECT LEADER: G. BOGUE	DRAWN BY: L. BUXTON
DESIGNED BY: G. BOGUE	CHECKED BY: T. KNIGHT
NEXT BEAM DETAILS 2	SHEET 26 OF 57

8/4/2014 12:13:50 PM V:\1953\active\195310795\transportation\drawing\z01j292_next_beam_dets.dgn

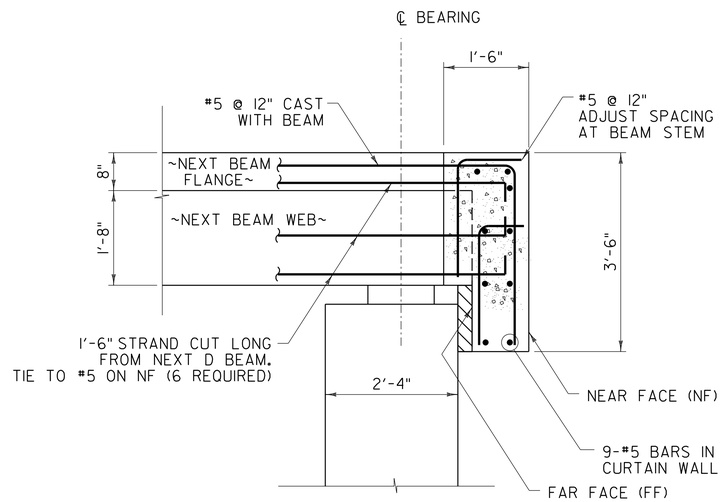

PRECAST CURTAIN WALL REINFORCING SECTION A-A

SCALE ¾" = 1'-0"

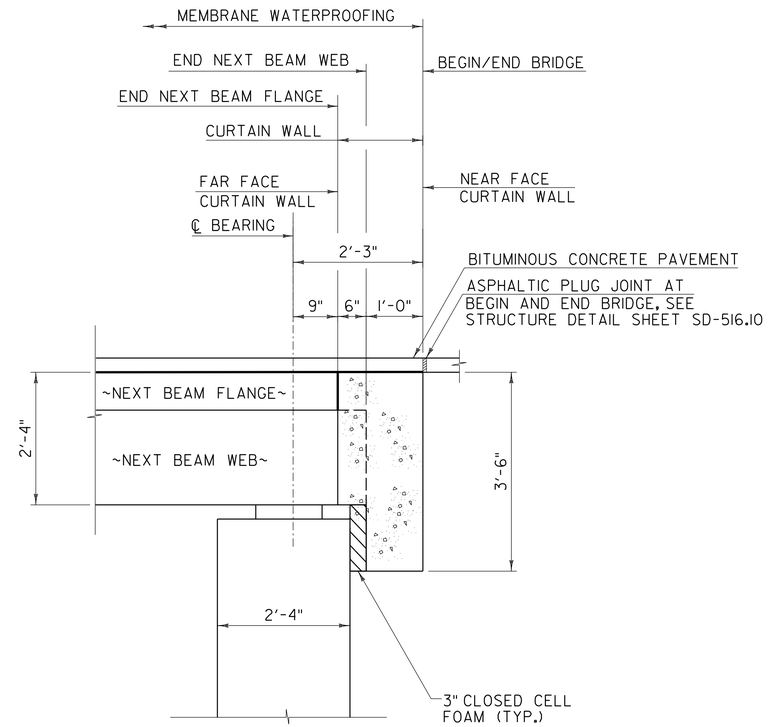

BRIDGE END DETAIL

SCALE ¾" = 1'-0"

NOTE:
FOR LOCATION OF SECTION A-A, REFER TO SHEET 28.

Stantec

PROJECT NAME: CORINTH	
PROJECT NUMBER: BRO 1447(29)	
FILE NAME: ...\z01j292_curtain_wall_dets.dgn	PLOT DATE: 8/4/2014
PROJECT LEADER: G. BOGUE	DRAWN BY: L. BUXTON
DESIGNED BY: G. BOGUE	CHECKED BY: T. KNIGHT
CURTAIN WALL DETAILS 1	SHEET 27 OF 57

8/4/2014 12:13:51 PM V:\1953\active\195310795\transportation\drawing\z01j292_curtain_wall_dets.dgn

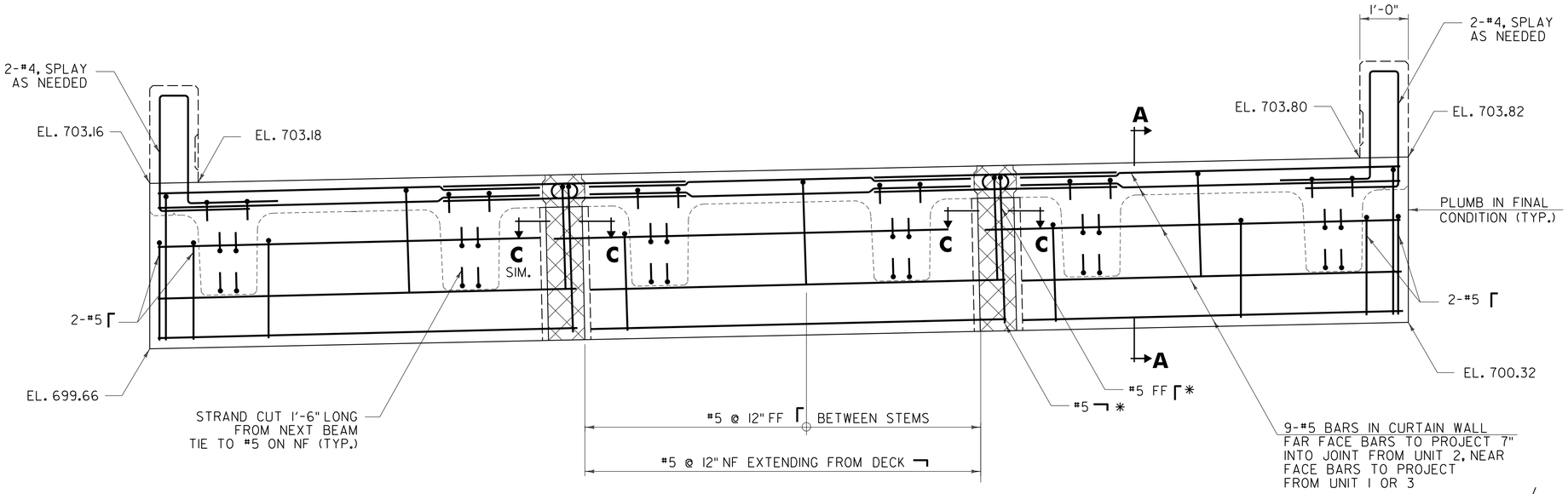

ABUTMENT 1 CURTAIN WALL ELEVATION

SCALE 3/4" = 1'-0"

* BARS FOR CLOSURE POUR INCIDENTAL TO PRECAST ITEM (TYP.)

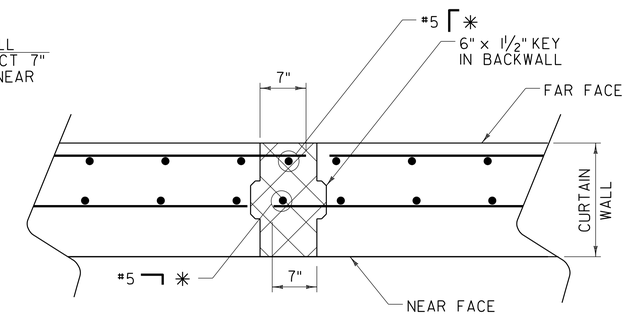

SECTION C-C

SCALE 1"=1'-0"

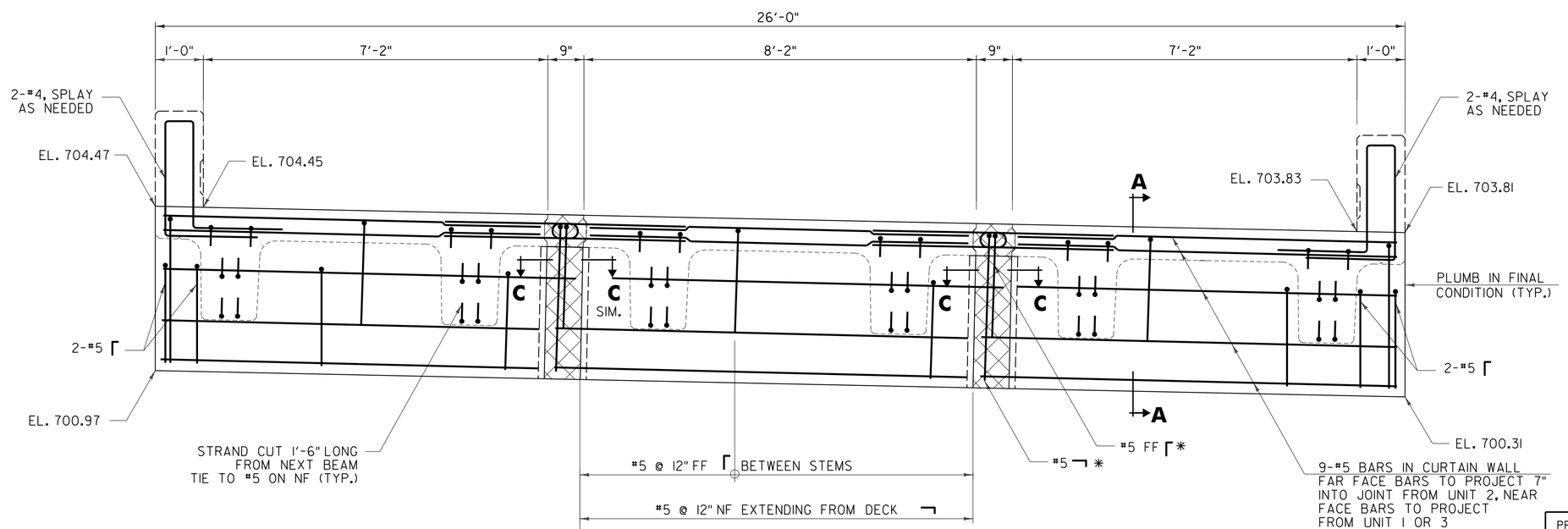

ABUTMENT 2 CURTAIN WALL ELEVATION

SCALE 3/4" = 1'-0"

* BARS FOR CLOSURE POUR INDICENTAL TO PRECAST ITEM (TYP.)

NOTE:
FOR SECTION A-A, REFER TO SHEET 27.

Stantec

PROJECT NAME: CORINTH	
PROJECT NUMBER: BRO 1447(29)	
FILE NAME: ...\z01j292_curtain_wall_dets.dgn	PLOT DATE: 8/4/2014
PROJECT LEADER: G. BOGUE	DRAWN BY: L. BUXTON
DESIGNED BY: G. BOGUE	CHECKED BY: T. KNIGHT
CURTAIN WALL DETAILS 2	SHEET 28 OF 57

8/4/2014 12:13:52 PM V:\1953\active\195310795\transportation\drawing\z01j292_curtain_wall_dets.dgn

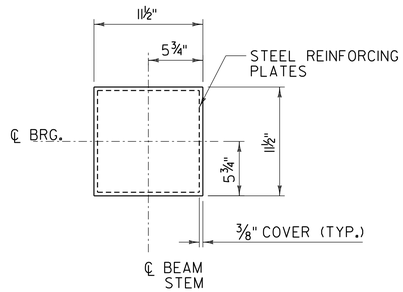

ELASTOMERIC BEARING PLAN

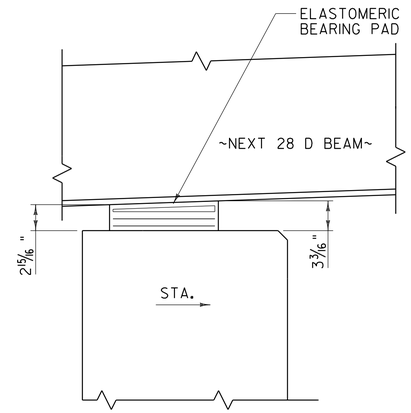

SIDE ELEVATION - ABUTMENT 1

BEARING NOTES:

1. BEARINGS SHALL CONFORM TO THE APPLICABLE SUBSECTIONS OF STANDARD SPECIFICATIONS SECTIONS 531 AND 731.

2. ALL REINFORCEMENT BETWEEN LAYERS OF ELASTOMER SHALL BE STEEL MEETING THE REQUIREMENTS OF SUBSECTION 714.02. ALL INTERNAL STEEL PLATES SHALL BE SAND BLASTED AND FREE OF COATING, RUST AND MILL SCALE. THE PLATES SHALL BE FREE OF SHARP EDGES AND BURRS.

3. THE BEARINGS ARE DESIGNED SO THAT THE SUPERSTRUCTURE MAY BE ERECTED WHEN THE BEAM TEMPERATURE IS WITHIN THE RANGE OF 20 DEGREES F AND 70 DEGREES F WITHOUT ADJUSTING THE BEARINGS FOR TEMPERATURE. IF THE BEAM TEMPERATURE IS OUTSIDE THIS RANGE, THE BEARINGS SHALL BE RESET AS DIRECTED BY THE RESIDENT.

4. STEEL REINFORCED ELASTOMERIC BEARINGS WERE DESIGNED PER METHOD = A.

5. THE ELASTOMER WAS DESIGNED WITH A SHEAR MODULUS OF 152 PSI +/- 15%.

6. ABUTMENT 1 AND 2 BEARINGS
   A. DESIGN DEAD LOAD REACTION = 34.87 KIPS/BEARING
   B. DESIGN LIVE LOAD REACTION = 37.68 KIPS/BEARING (NO IMPACT)
   C. ROTATION CAPACITY = 0.018 RADIANS
   D. LONGITUDINAL DESIGN TRANSLATION = 0.432"

7. ALL BEARINGS SHALL BE MARKED PRIOR TO SHIPPING. THE MARKS SHALL INCLUDE THE BEARING LOCATION ON THE BRIDGE, AND A DIRECTION ARROW THAT POINTS UP-STATION. ALL MARKS SHALL BE PERMANENT AND SHALL BE VISIBLE AFTER THE BEARING IS INSTALLED.

8. THE ELASTOMER SHALL BE NEOPRENE MEETING THE REQUIREMENTS OF SUBSECTION 731.03.

9. BEARING DESIGN SHALL BE PER THE AASHTO LRFD BRIDGE DESIGN SPECIFICATIONS 5TH EDITION AND ITS LATEST REVISIONS.

10. ALTERNATE CONFIGURATIONS FOR BEARINGS MAY BE SUBMITTED FOR APPROVAL. ANY ALTERNATE SUBMITTED SHALL BE DESIGNED AND CERTIFIED TO MEET THE DESIGN LOADS AND CRITERIA SHOWN ON THE PLANS.

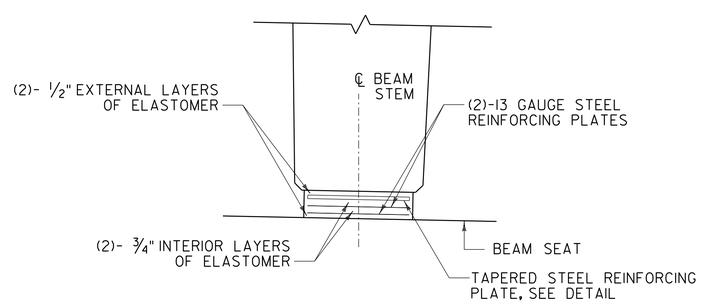

FRONT ELEVATION

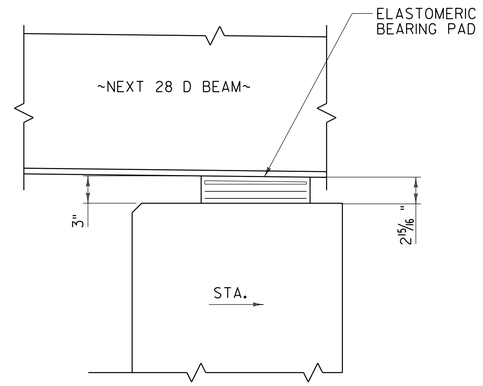

SIDE ELEVATION - ABUTMENT 2

ELASTOMERIC BEARING ASSEMBLY

SCALE 1½" = 1'-0"

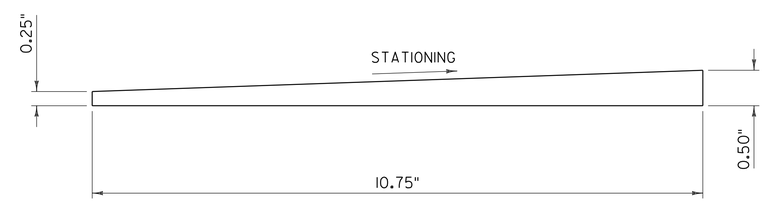

ABUTMENT 1 STEEL REINFORCING PLATE DETAIL

NOT TO SCALE

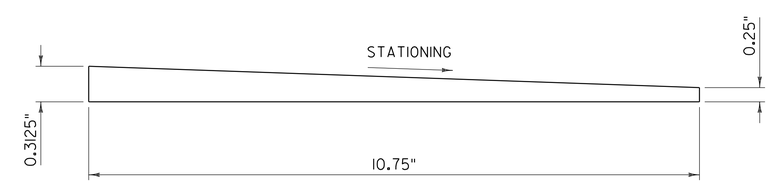

ABUTMENT 2 STEEL REINFORCING PLATE DETAIL

NOT TO SCALE

PROJECT NAME: CORINTH	
PROJECT NUMBER: BRO 1447(29)	
FILE NAME: ...\drawing\z01j292_brgs.dgn	PLOT DATE: 8/4/2014
PROJECT LEADER: G. BOGUE	DRAWN BY: L. BUXTON
DESIGNED BY: J. HUNGERFORD	CHECKED BY: G. BOGUE
BEARING DETAILS	SHEET 29 OF 57

Stantec

8/4/2014 12:13:53 PM V:\1953\active\195310795\transportation\drawing\z01j292_brgs.dgn

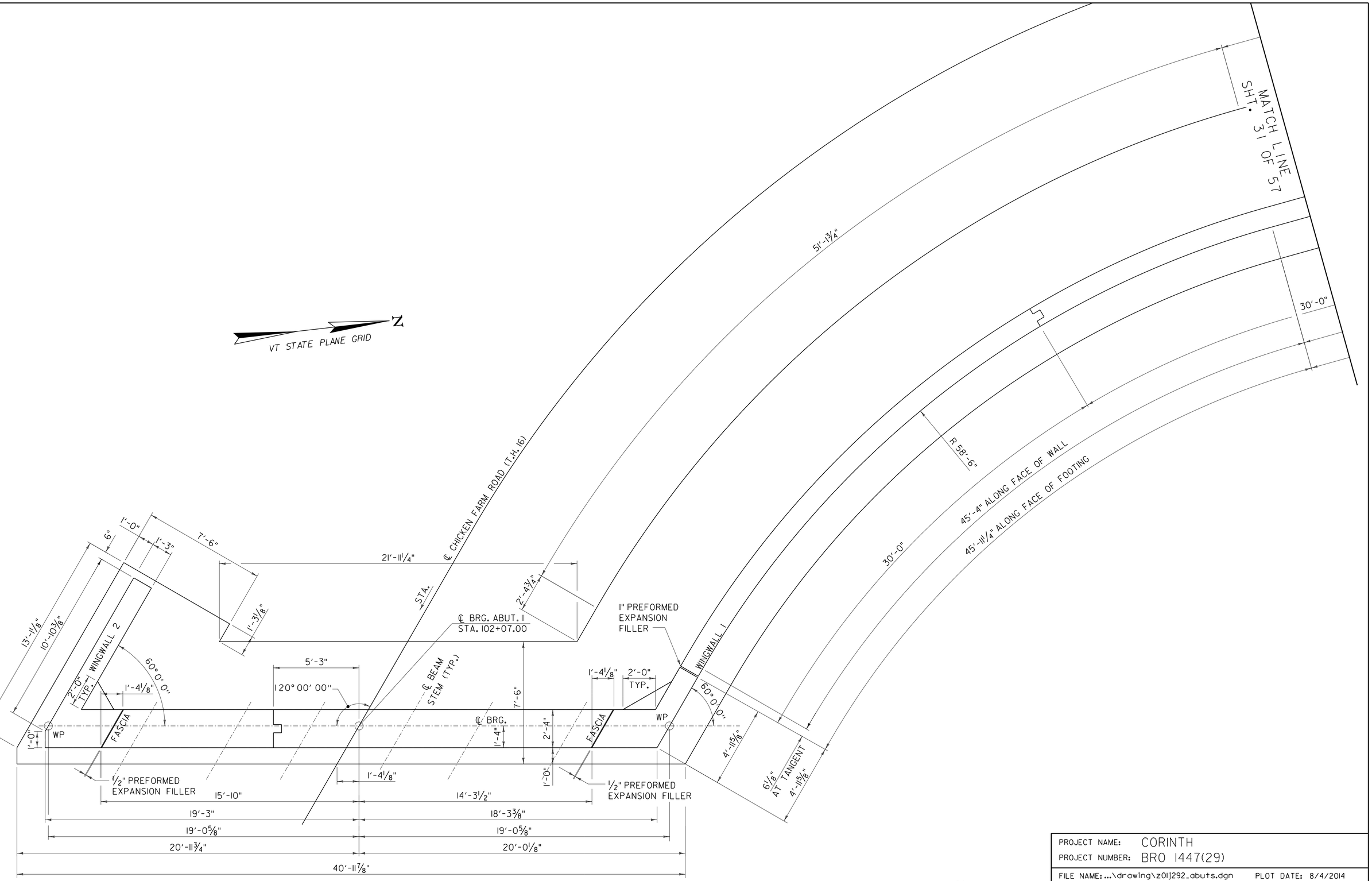

ABUTMENT 1 PLAN

SCALE 3/8" = 1'-0"

PROJECT NAME: CORINTH	
PROJECT NUMBER: BRO 1447(29)	
FILE NAME: ...\drawing\z01j292_abuts.dgn	PLOT DATE: 8/4/2014
PROJECT LEADER: G. BOGUE	DRAWN BY: L. BUXTON
DESIGNED BY: J. HUNGERFORD	CHECKED BY: G. BOGUE
ABUTMENT 1 MASONRY 1	SHEET 30 OF 57

Stantec

8/4/2014 12:13:56 PM V:\1953\active\195301795\transportation\drawing\z01j292_abuts.dgn

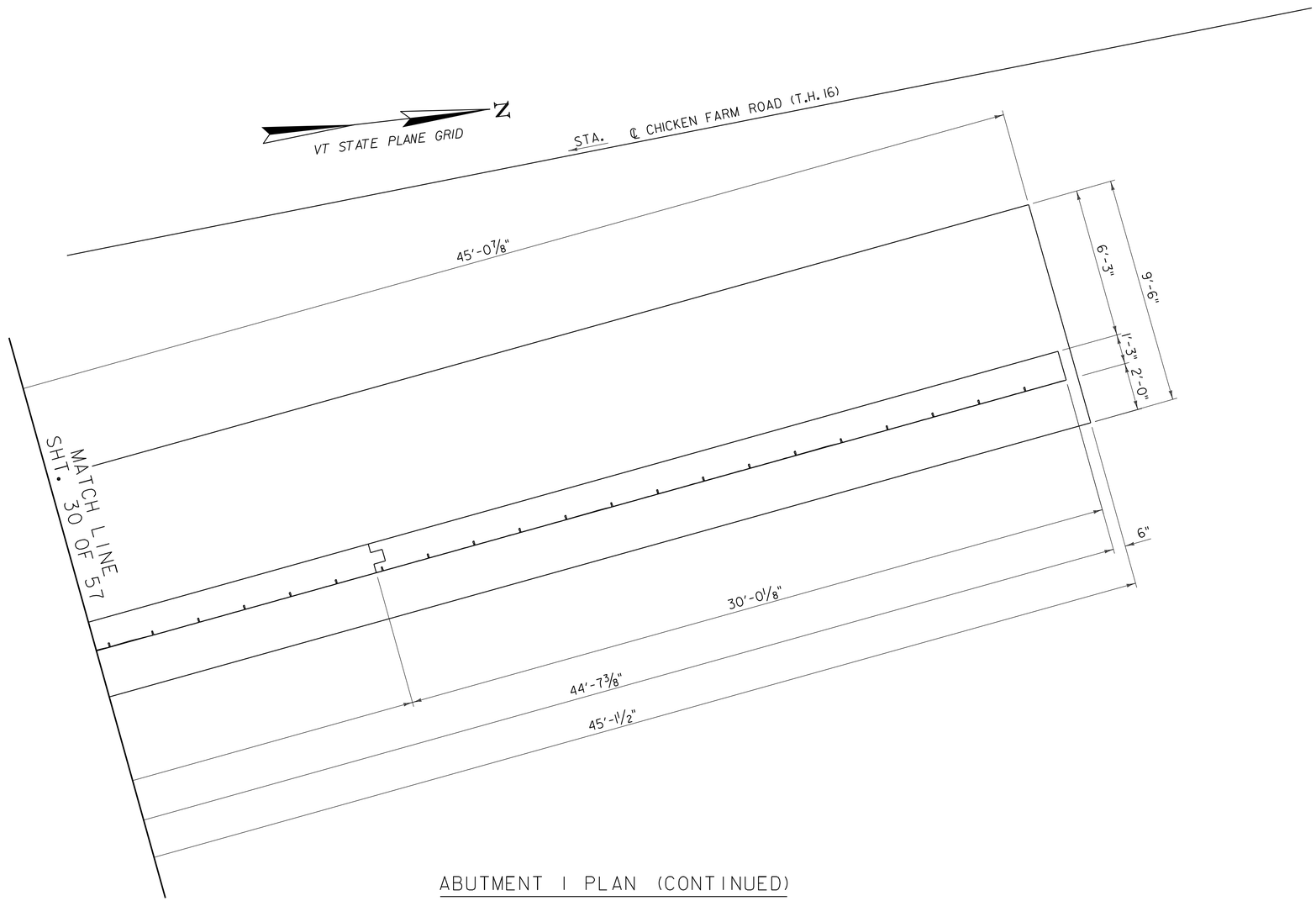

ABUTMENT 1 PLAN (CONTINUED)

SCALE 3/8" = 1'-0"

PROJECT NAME: CORINTH	
PROJECT NUMBER: BRO 1447(29)	
FILE NAME: ...\drawing\z01j292_abuts.dgn	PLOT DATE: 8/4/2014
PROJECT LEADER: G. BOGUE	DRAWN BY: L. BUXTON
DESIGNED BY: J. HUNGERFORD	CHECKED BY: G. BOGUE
ABUTMENT 1 MASONRY 2	SHEET 31 OF 57

Stantec

8/4/2014 12:13:58 PM V:\1953\active\195310795\transportation\drawing\z01j292_abuts.dgn

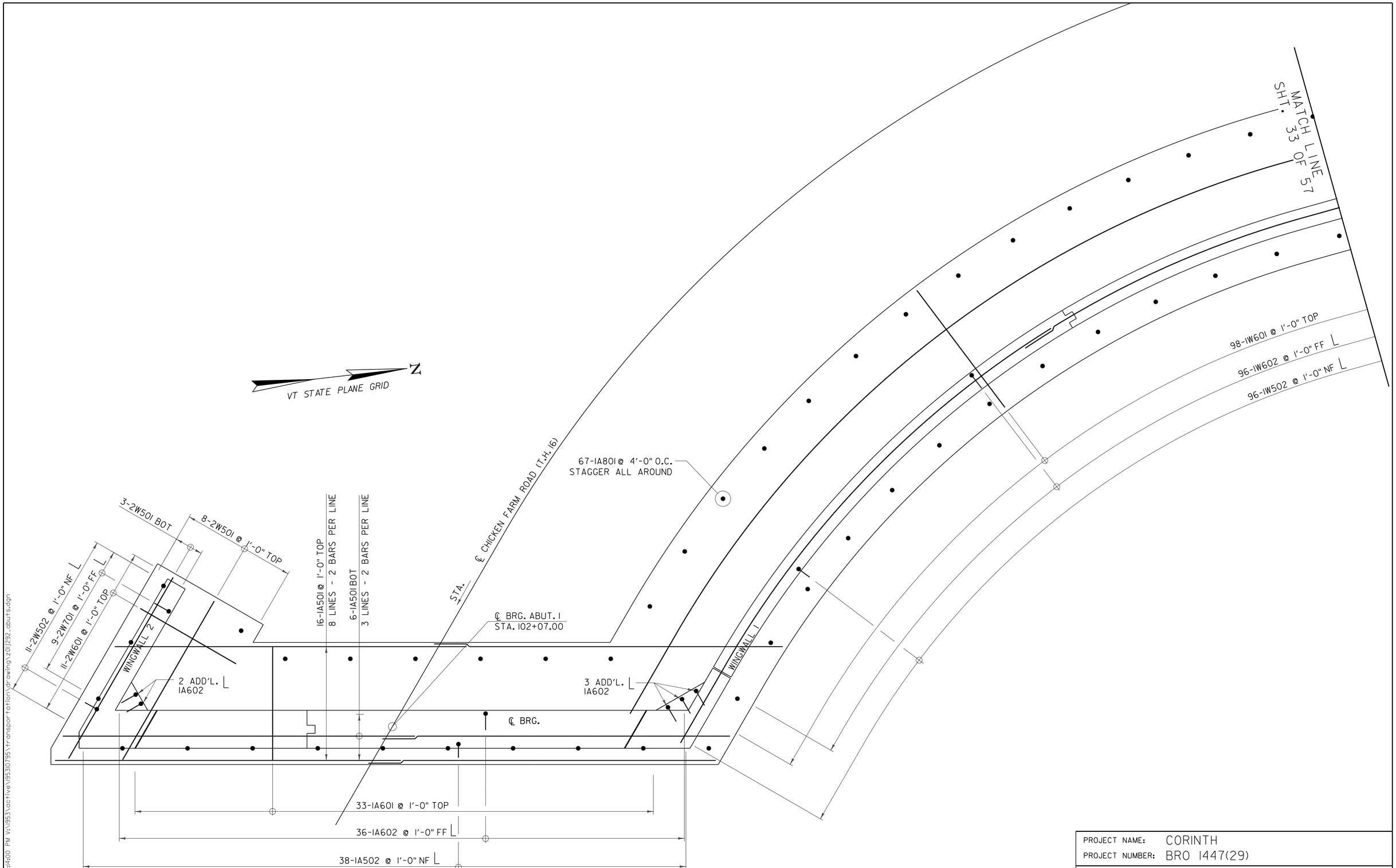

ABUTMENT 1 FOOTING REINFORCEMENT

SCALE 3/8" = 1'-0"

Stantec

PROJECT NAME: CORINTH	
PROJECT NUMBER: BRO 1447(29)	
FILE NAME: ...\drawing\z01j292_abuts.dgn	PLOT DATE: 8/4/2014
PROJECT LEADER: G. BOGUE	DRAWN BY: L. BUXTON
DESIGNED BY: J. HUNGERFORD	CHECKED BY: G. BOGUE
ABUTMENT 1 FOOTING REINFORCEMENT 1	SHEET 32 OF 57

8/4/2014 12:14:00 PM V:\1953\active\195310795\transportation\drawing\z01j292_abuts.dgn

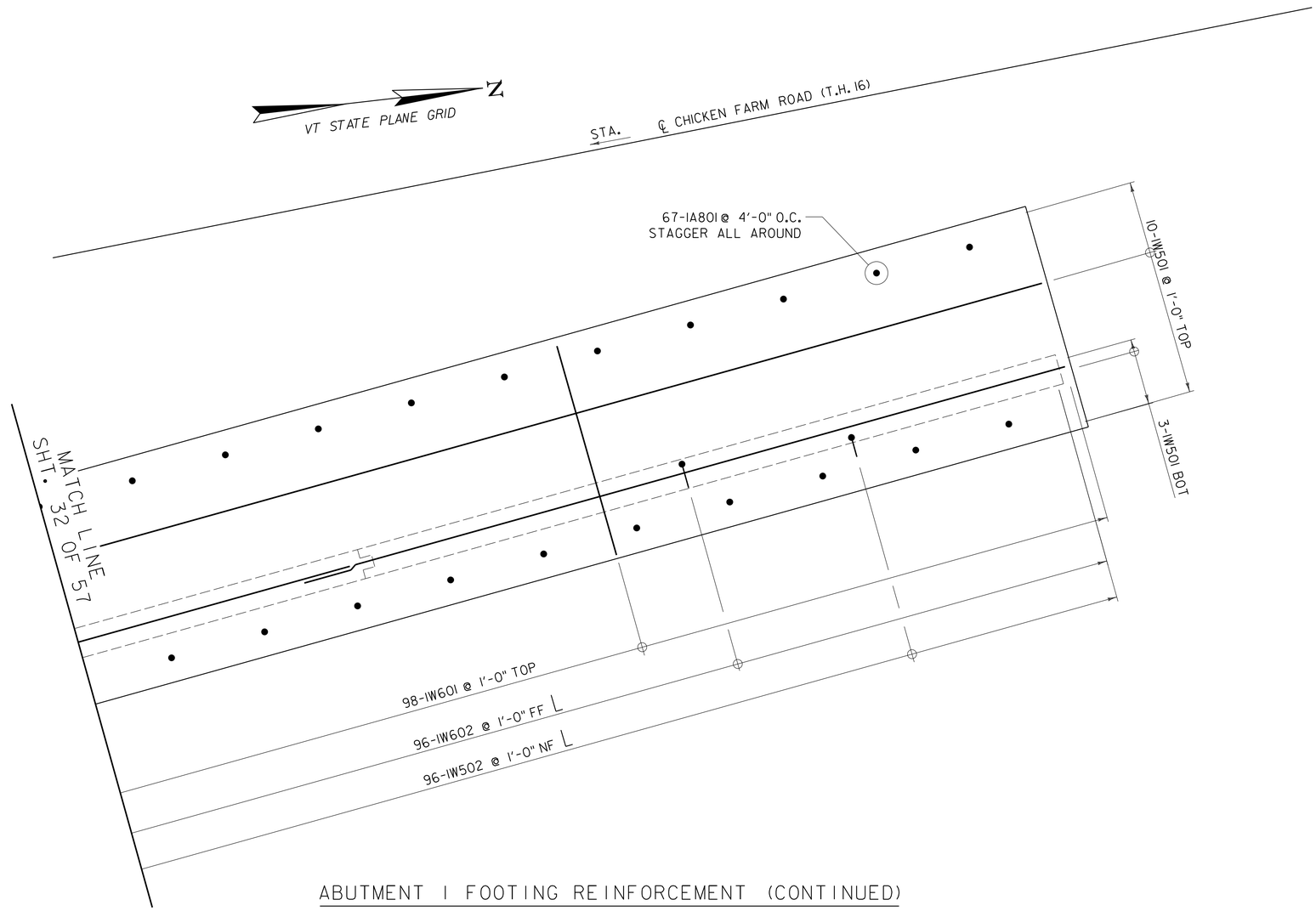

ABUTMENT 1 FOOTING REINFORCEMENT (CONTINUED)

SCALE 3/8" = 1'-0"

PROJECT NAME: CORINTH	
PROJECT NUMBER: BRO 1447(29)	
FILE NAME: ...\drawing\z01j292_abuts.dgn	PLOT DATE: 8/4/2014
PROJECT LEADER: G. BOGUE	DRAWN BY: L. BUXTON
DESIGNED BY: J. HUNGERFORD	CHECKED BY: G. BOGUE
ABUTMENT 1 FTG. REINFORCEMENT 2	SHEET 33 OF 57

Stantec

8/4/2014 12:14:02 PM V:\1953\active\195310795\transportation\drawing\z01j292_abuts.dgn

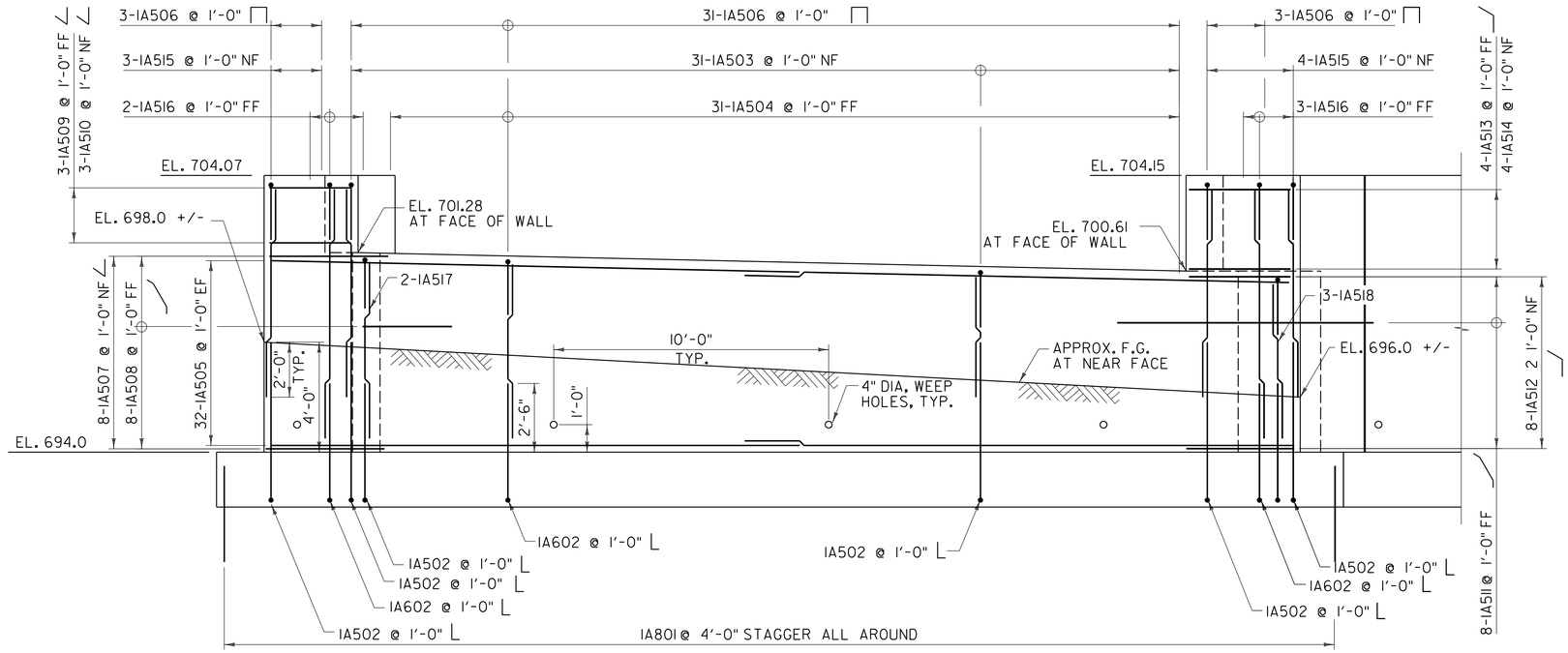

ABUTMENT 1 REINFORCEMENT

SCALE 3/8" = 1'-0"

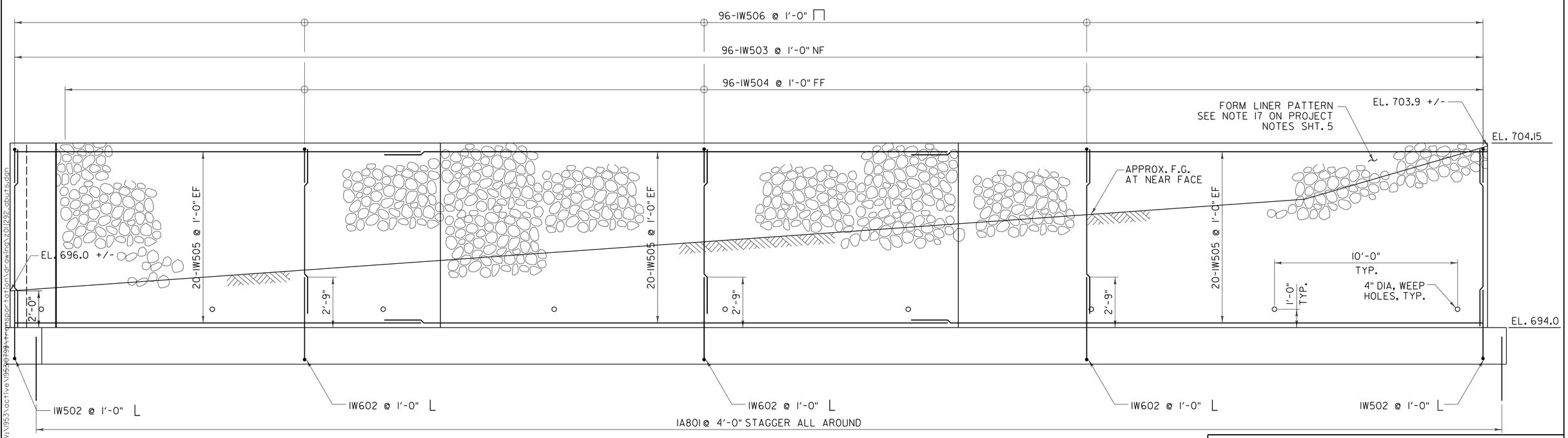

WINGWALL 1 ELEVATION (CURVED)

SCALE 3/8" = 1'-0"

Stantec

PROJECT NAME: CORINTH	
PROJECT NUMBER: BRO 1447(29)	
FILE NAME: ...\drawing\z01j292_abuts.dgn	PLOT DATE: 8/4/2014
PROJECT LEADER: G. BOGUE	DRAWN BY: L. BUXTON
DESIGNED BY: J. HUNGERFORD	CHECKED BY: G. BOGUE
ABUTMENT 1 & WW1 REINFORCEMENT	SHEET 34 OF 57

8/4/2014 12:14:04 PM V:\1513\active\156706001\transportation\drawing\z01j292_abuts.dgn

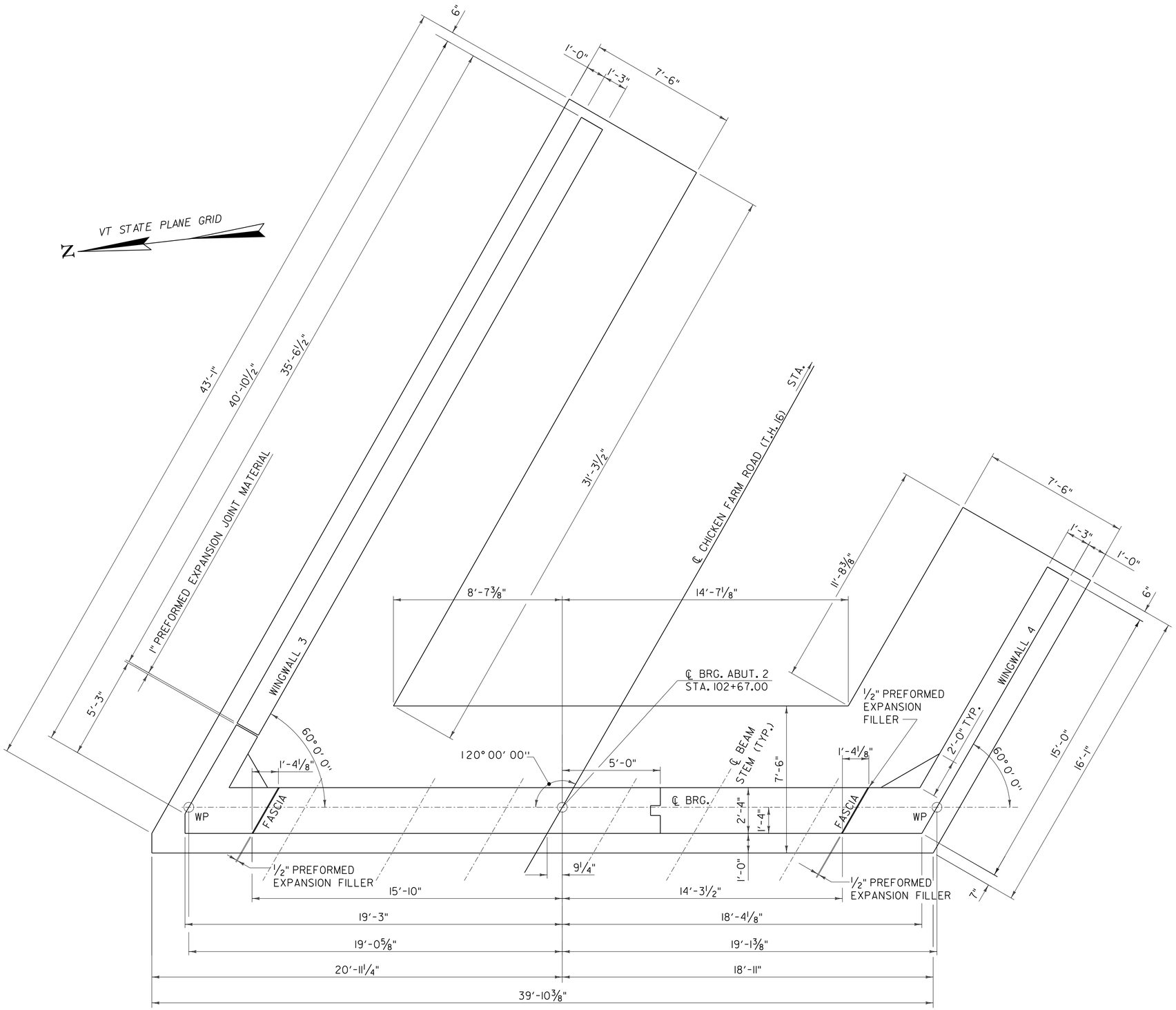

ABUTMENT 2 PLAN

SCALE ⅜" = 1'-0"

Stantec

PROJECT NAME: CORINTH	
PROJECT NUMBER: BRO 1447(29)	
FILE NAME: ...\drawing\z01j292_abuts.dgn	PLOT DATE: 8/4/2014
PROJECT LEADER: G. BOGUE	DRAWN BY: L. BUXTON
DESIGNED BY: J. HUNGERFORD	CHECKED BY: G. BOGUE
ABUTMENT 2 MASONRY	SHEET 35 OF 57

8/4/2014 12:14:06 PM V:\1953\active\195310795\transportation\drawing\z01j292_abuts.dgn

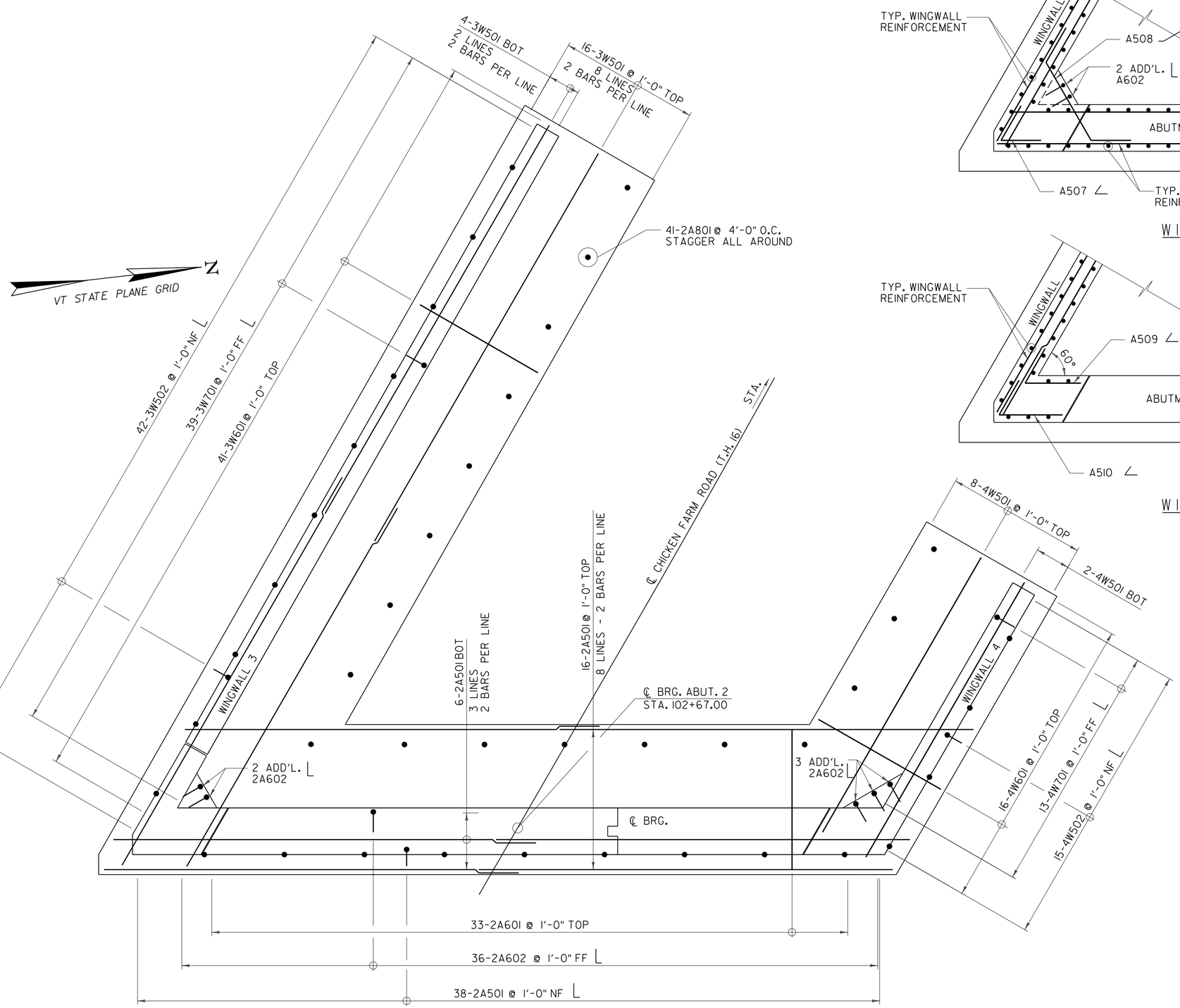

ABUTMENT 2 FOOTING REINFORCEMENT

SCALE 3/8" = 1'-0"

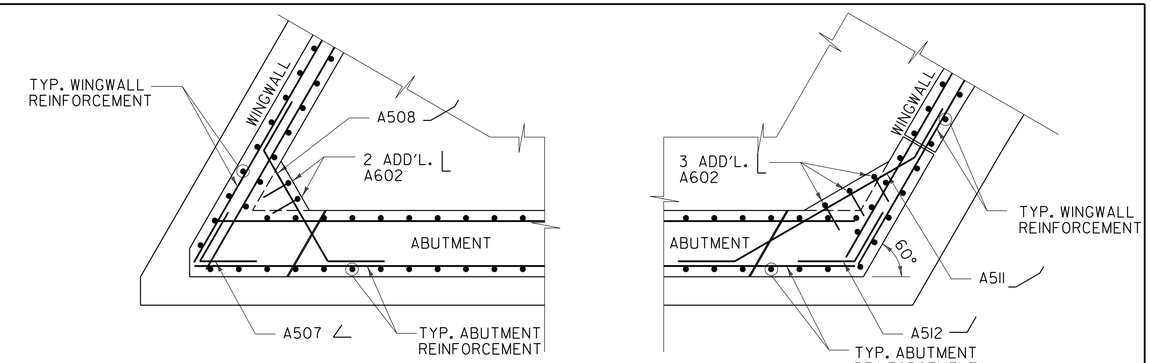

WINGWALL CORNER DETAIL
BELOW BRIDGE SEAT

SCALE 3/8" = 1'-0"

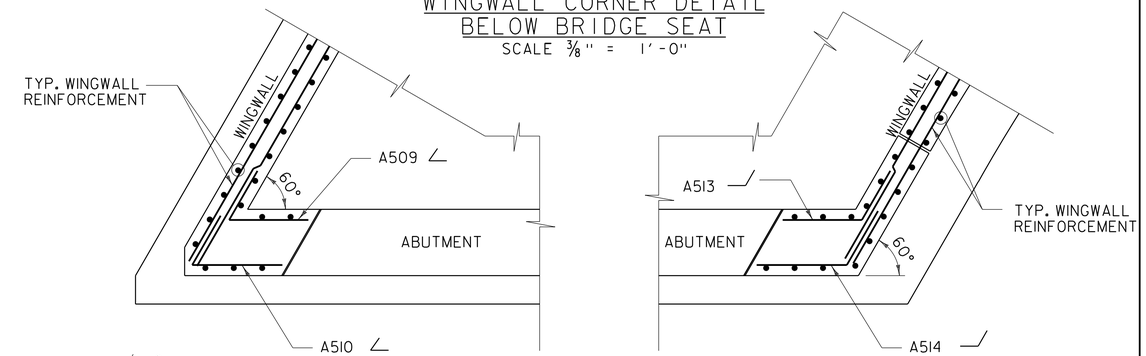

WINGWALL CORNER DETAIL
ABOVE BRIDGE SEAT

SCALE 3/8" = 1'-0"

PROJECT NAME: CORINTH	
PROJECT NUMBER: BRO 1447(29)	
FILE NAME: ...\drawing\z01j292_abuts.dgn	PLOT DATE: 8/4/2014
PROJECT LEADER: G. BOGUE	DRAWN BY: L. BUXTON
DESIGNED BY: J. HUNGERFORD	CHECKED BY: G. BOGUE
ABUTMENT 2 FOOTING REINFORCEMENT	SHEET 36 OF 57

Stantec

8/4/2014 12:14:08 PM V:\1953\active\195310795\transportation\drawing\z01j292_abuts.dgn

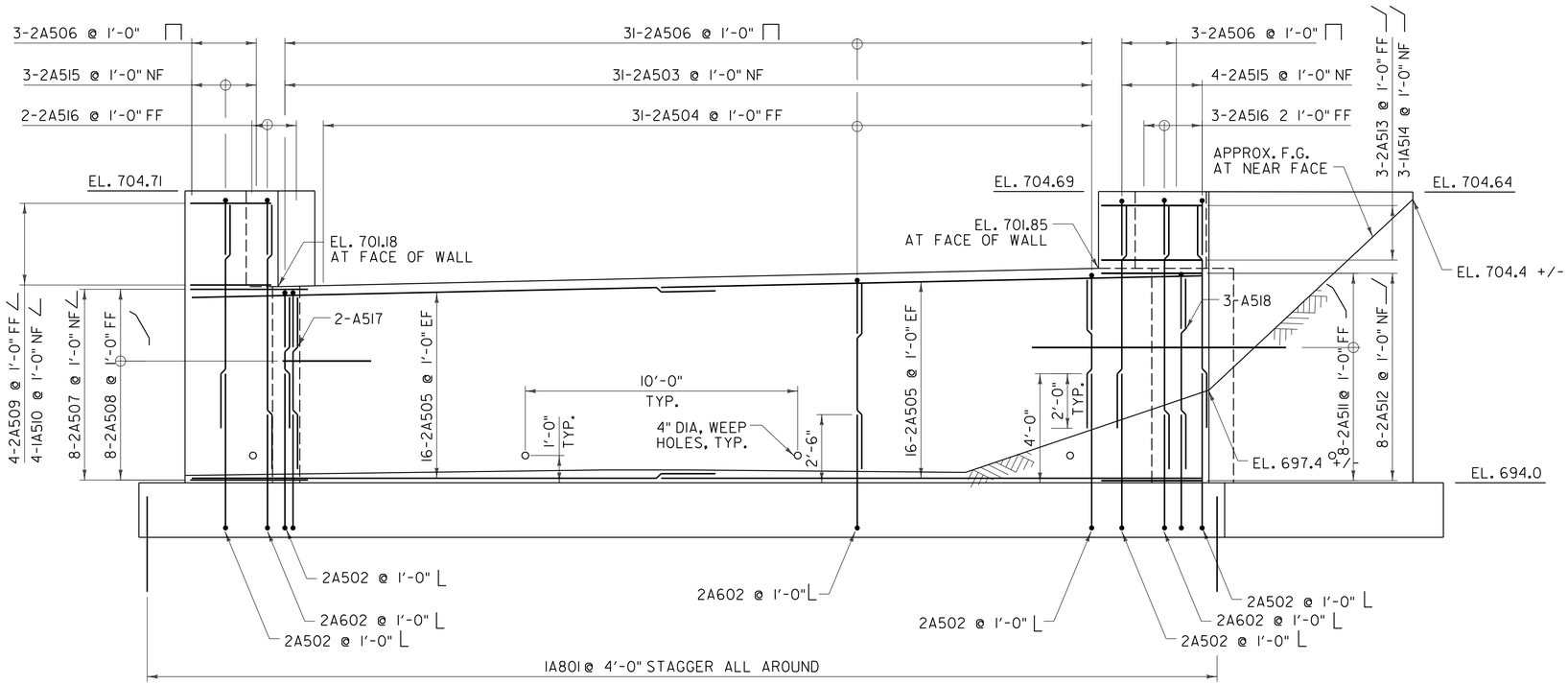

ABUTMENT 2 REINFORCEMENT

SCALE 3/8" = 1'-0"

PROJECT NAME: CORINTH	
PROJECT NUMBER: BRO 1447(29)	
FILE NAME: ...\drawing\z01j292_abuts.dgn	PLOT DATE: 8/4/2014
PROJECT LEADER: G. BOGUE	DRAWN BY: L. BUXTON
DESIGNED BY: J. HUNGERFORD	CHECKED BY: G. BOGUE
ABUTMENT 2 REINFORCEMENT	SHEET 37 OF 57

Stantec

8/4/2014 12:41:10 PM V:\1953\active\195310795\transportation\drawing\z01j292_abuts.dgn

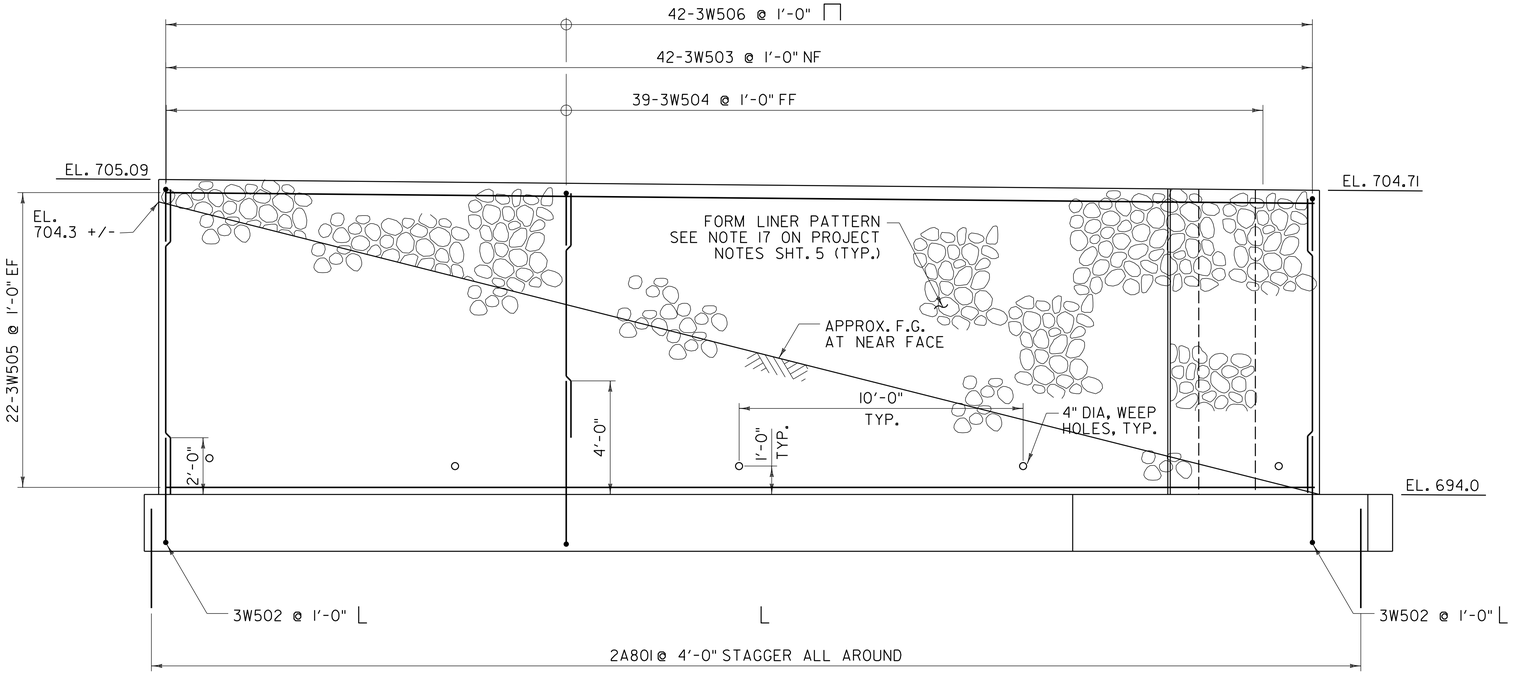

WINGWALL 3 ELEVATION

SCALE 3/8" = 1'-0"

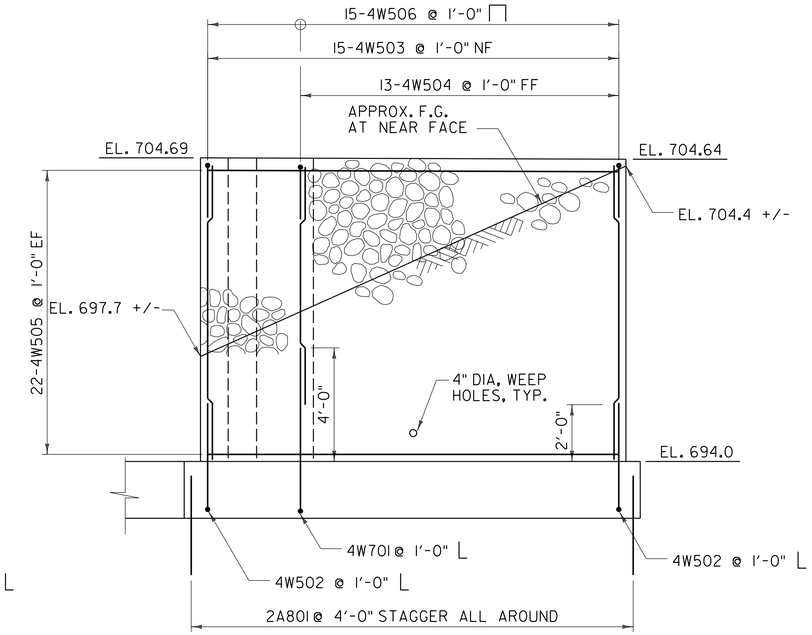

WINGWALL 4 ELEVATION

SCALE 3/8" = 1'-0"

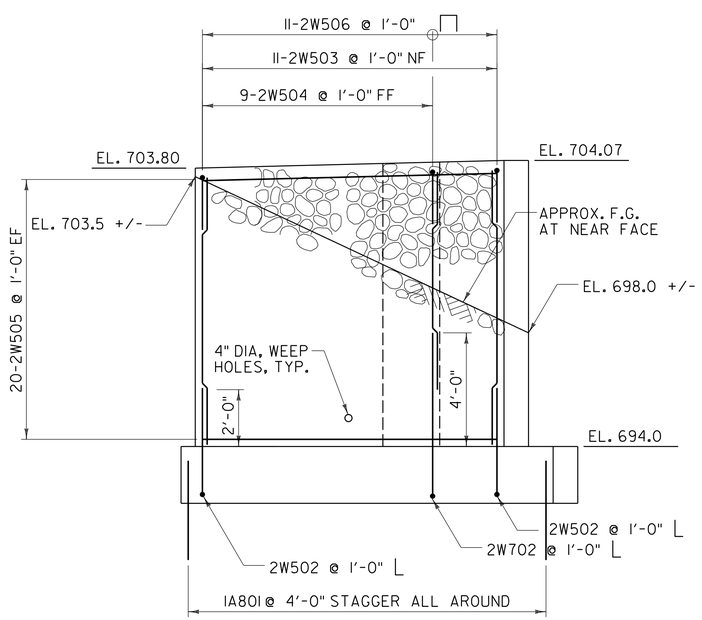

WINGWALL 2 ELEVATION

SCALE 3/8" = 1'-0"

Stantec

PROJECT NAME: CORINTH	
PROJECT NUMBER: BRO 1447(29)	
FILE NAME: ...\drawing\z01j292_abuts.dgn	PLOT DATE: 8/4/2014
PROJECT LEADER: G. BOGUE	DRAWN BY: L. BUXTON
DESIGNED BY: J. HUNGERFORD	CHECKED BY: G. BOGUE
WINGWALL 2, 3 & 4 REINFORCEMENT	SHEET 38 OF 57

8/4/2014 12:14:12 PM V:\1953\active\195310795\transportation\drawing\z01j292_abuts.dgn

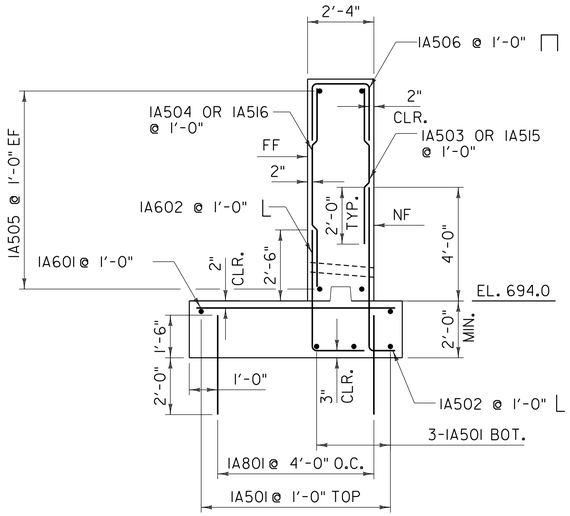

ABUTMENT No. 1 SECTION

SCALE: 3/8" = 1'-0"

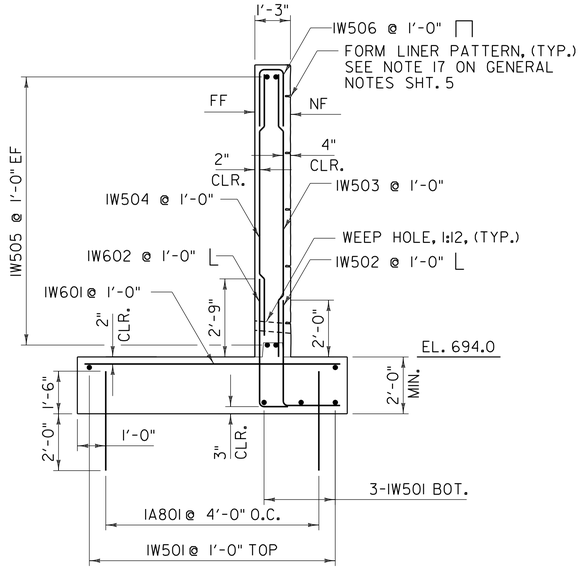

WINGWALL No. 1 SECTION

SCALE: 3/8" = 1'-0"

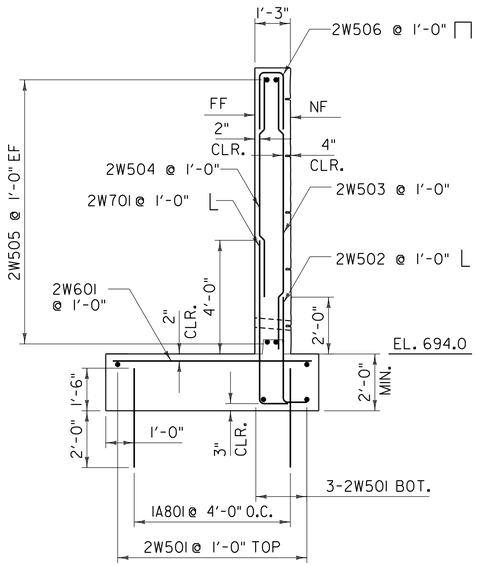

WINGWALL No. 2 SECTION

SCALE: 3/8" = 1'-0"

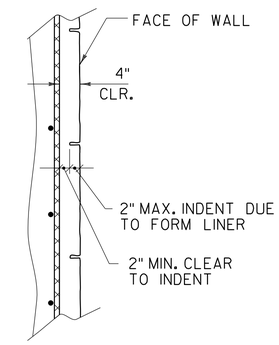

FORM LINER
CLEAR COVER DETAIL

NOT TO SCALE

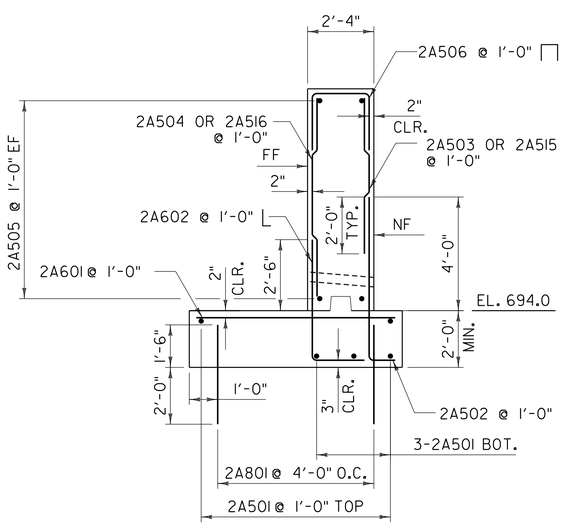

ABUTMENT No. 2 SECTION

SCALE: 3/8" = 1'-0"

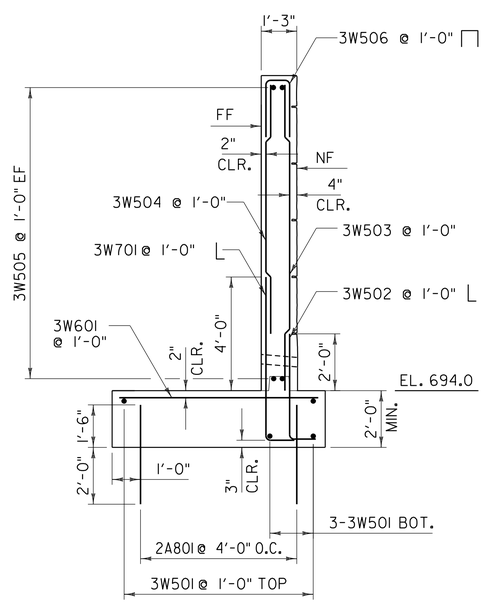

WINGWALL No. 3 SECTION

SCALE: 3/8" = 1'-0"

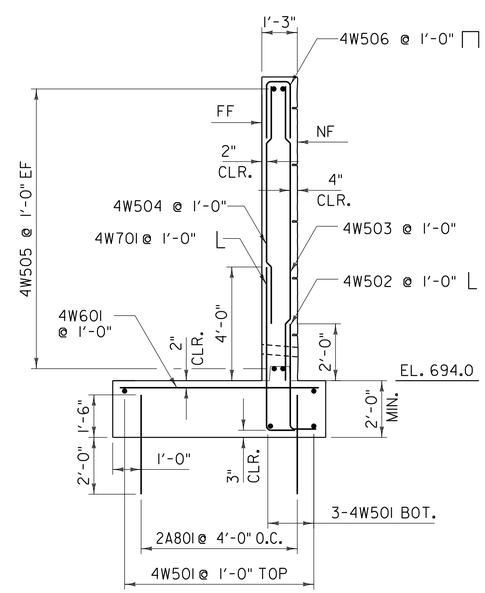

WINGWALL No. 4 SECTION

SCALE: 3/8" = 1'-0"

NOTE:
1A801 AND 2A801 ARE DOWELS INTO LEDGE.

NF = NEAR FACE
FF = FAR FACE
EF = EACH FACE
▲ = CUT TO FIT IN FIELD

3" CLEAR UNLESS OTHERWISE
SPECIFIED ON PLANS.

ALL LAPS ARE 2'-0" UNLESS
OTHERWISE SPECIFIED ON THE PLANS.

Stantec

PROJECT NAME: CORINTH	
PROJECT NUMBER: BRO 1447(29)	
FILE NAME: ...\drawing\z01j292_abuts.dgn	PLOT DATE: 8/26/2014
PROJECT LEADER: G. BOGUE	DRAWN BY: L. BUXTON
DESIGNED BY: J. HUNGERFORD	CHECKED BY: G. BOGUE
ABUTMENT & WINGWALL SECTIONS	SHEET 39 OF 57

8/26/2014 11:42:45 AM V:\1953\active\195310795\transportation\drawing\z01j292_abuts.dgn

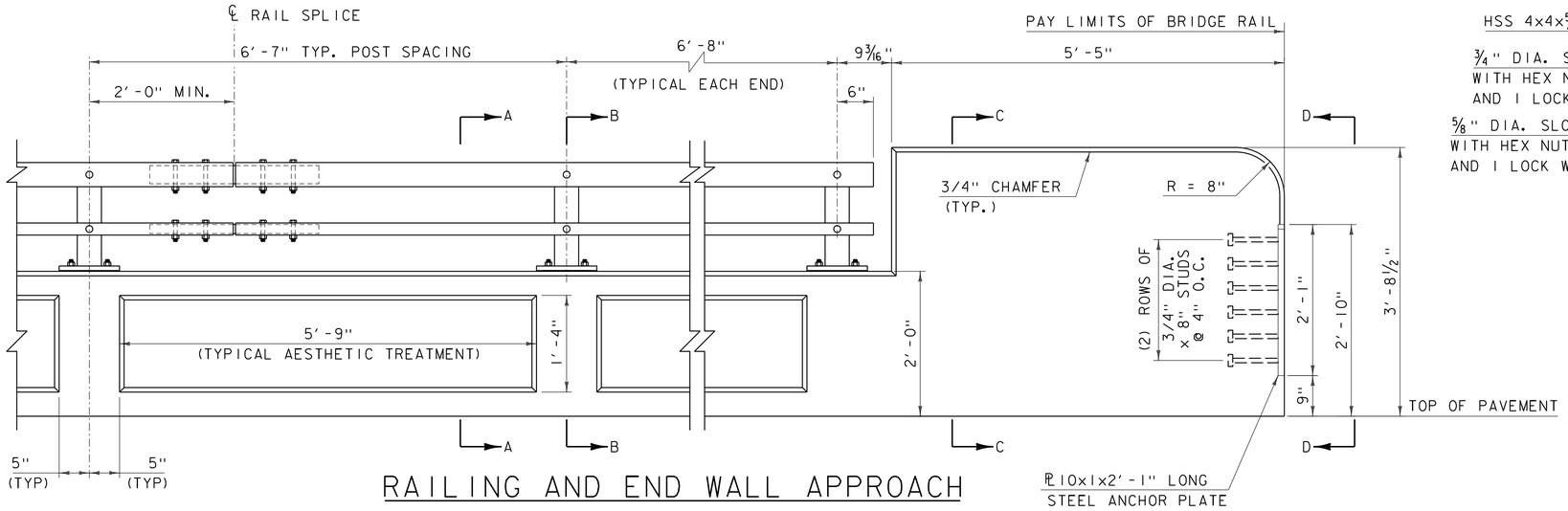

RAILING AND END WALL APPROACH

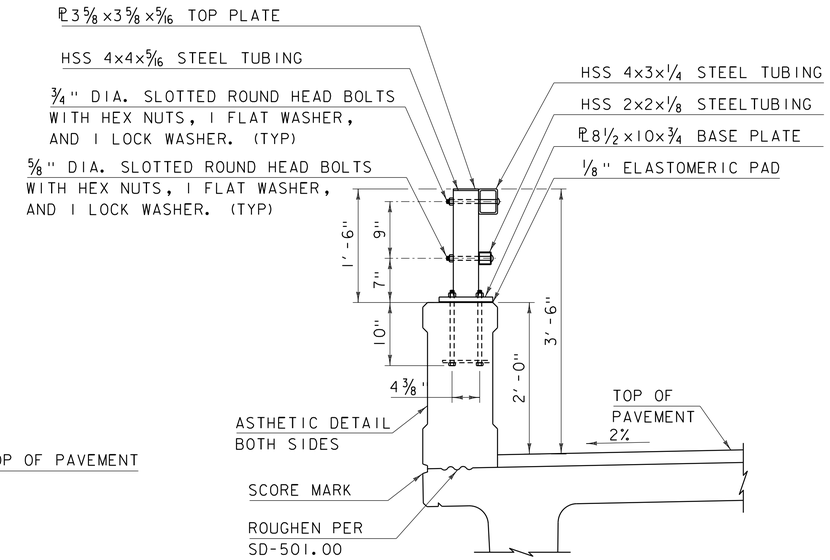

RAIL TYPICAL SECTION

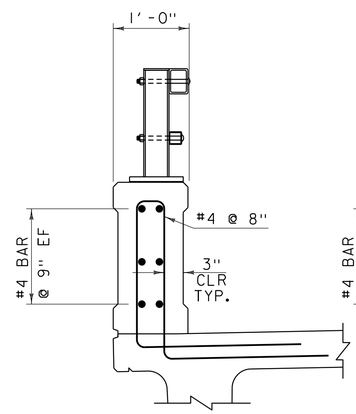

SECTION A-A

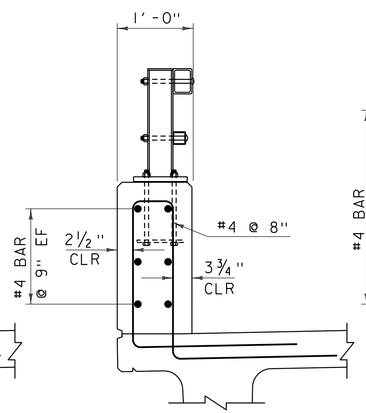

SECTION B-B

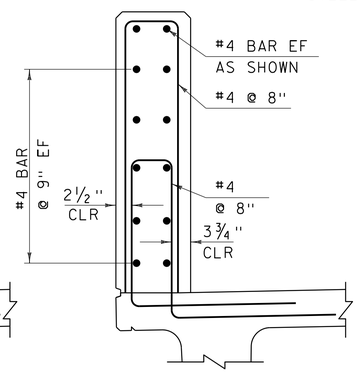

SECTION C-C

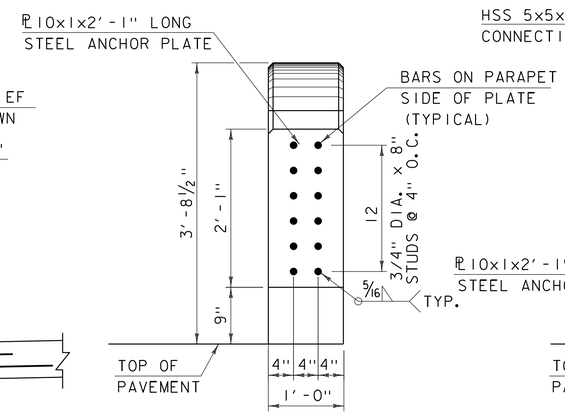

SHOWING EMBEDDED BAR

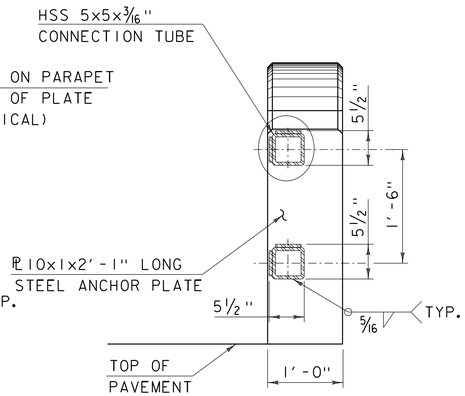

WITH HSS CONNECTOR TUBE

SECTION D-D

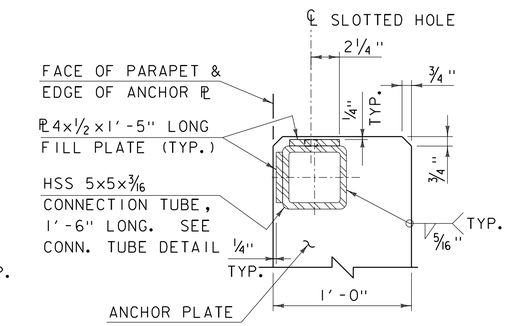

DETAIL B

NOTES:

1. BRIDGE RAIL SHALL HAVE A RUBBED FINISH IN ACCORDANCE WITH SECTION 501.
2. HOLES AND RECESSES ARE TO BE FORMED OR CORED, PERCUSSION DRILLING IS NOT ALLOWED.
3. ALL STEEL COMPONENTS SHALL BE COATED BLACK IN ACCORDANCE WITH ASTM D7803 FOLLOWING GALVANIZING.
4. SEE STANDARD DRAWINGS S-352A, S-352B AND S-352C FOR ADDITIONAL INFORMATION AND REQUIREMENTS.
5. AESTHETIC TREATMENT SHALL BE APPLIED TO BOTH SIDES OF THE RAIL.
6. CONCRETE FOR BRIDGE RAIL SHALL BE CONCRETE, HIGH PERFORMANCE CLASS A AND WILL BE PAID FOR UNDER CONTRACT ITEM 525.45. REINFORCING STEEL SHALL MEET THE REQUIREMENTS OF SECTION 507 FOR LEVEL 1 REINFORCING AND WILL BE INCLUDED IN THE UNIT PRICE BID FOR CONTRACT ITEM 525.45.

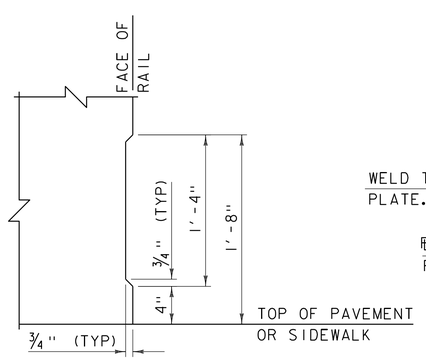

AESTHETIC TREATMENT DETAIL

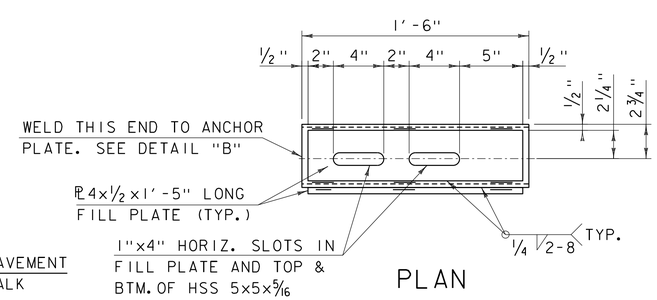

PLAN

CONNECTION TUBE DETAIL

NOTE:

NF = NEAR FACE
FF = FAR FACE
EF = EACH FACE
2'-2" BAR LAP UNLESS OTHERWISE SPECIFIED ON PLANS.

PROJECT NAME: CORINTH	
PROJECT NUMBER: BRO 1447(29)	
FILE NAME: ...\z01j292_br_app_raildets.dgn	PLOT DATE: 8/4/2014
PROJECT LEADER: G. BOGUE	DRAWN BY: E. ALLING
DESIGNED BY: M. CHENETTE	CHECKED BY: G. BOGUE
BRIDGE RAIL DETAILS 1	SHEET 40 OF 57

Stantec

8/4/2014

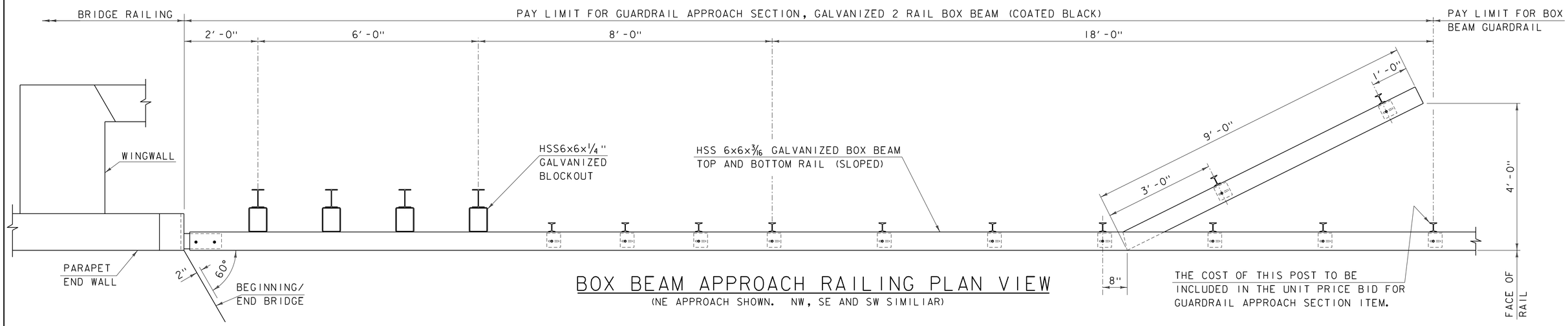

BOX BEAM APPROACH RAILING PLAN VIEW

(NE APPROACH SHOWN. NW, SE AND SW SIMILIAR)

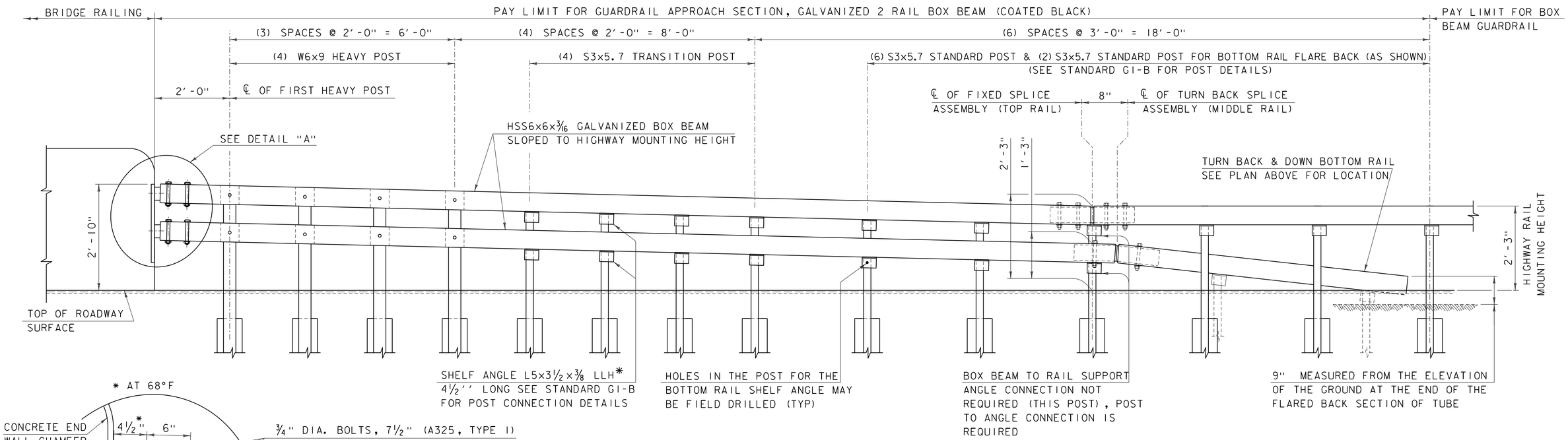

BOX BEAM APPROACH RAILING ELEVATION

*LONG LEG HORIZONTAL

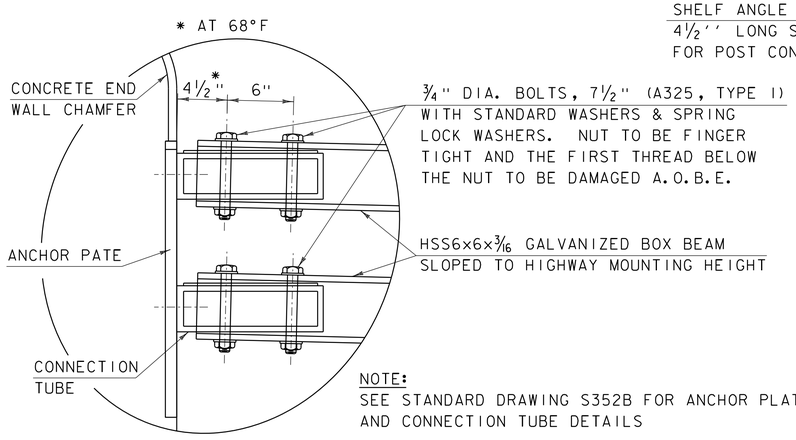

NOTE:
SEE STANDARD DRAWING S352B FOR ANCHOR PLATE AND CONNECTION TUBE DETAILS

DETAIL A

NOTE:
ALL STEEL COMPONENTS TO BE PAINTED BLACK

Stantec

PROJECT NAME: CORINTH	
PROJECT NUMBER: BRO 1447(29)	
FILE NAME: ...\z01j292_br_app_raildets.dgn	PLOT DATE: 8/4/2014
PROJECT LEADER: G. BOGUE	DRAWN BY: E. ALLING
DESIGNED BY: M. CHENETTE	CHECKED BY: G. BOGUE
APPROACH RAIL DETAILS	SHEET 41 OF 57

STATE OF VERMONT
AGENCY OF TRANSPORTATION

REINFORCING STEEL SCHEDULE

ITEM	EACH	SIZE	LENGTH	MARK	TYPE	A	B	C	D	E	F	G	H	J	K	R	O
ABUTMENT NO. 1																	
	22	5	21'- 6"	1A501	STR												
	38	5	6'- 8"	1A502	17		---	5'- 9"	0'- 11"								
	31	5	4'- 4"	1A503	STR												
	31	5	5'- 11"	1A504	STR												
	32	5	19'- 6"	1A505	STR												
	37	5	7'- 4"	1A506	S10		2'- 8"	2'- 0"	2'- 8"								
	8	5	4'- 0"	1A507	22		2'- 0"	2'- 0"	---				1'- 9"	---	1'- 0"	---	
	8	5	8'- 10"	1A508	22		2'- 0"	4'- 10"	2'- 0"				1'- 9"	1'- 9"	1'- 0"	1'- 0"	
	3	5	4'- 6"	1A509	22		2'- 0"	2'- 6"	---				1'- 9"	---	1'- 0"	---	
	3	5	5'- 4"	1A510	22		2'- 0"	3'- 4"	---				1'- 9"	---	1'- 0"	---	
	8	5	12'- 8"	1A511	22		2'- 0"	8'- 8"	2'- 0"				1'- 0"	1'- 0"	1'- 9"	1'- 9"	
	8	5	4'- 0"	1A512	22		2'- 0"	2'- 0"	---				1'- 10"	---	1'- 0"	---	
	4	5	4'- 9"	1A513	22		---	2'- 9"	2'- 0"				---	1'- 9"	---	1'- 0"	
	4	5	5'- 2"	1A514	22		---	3'- 2"	2'- 0"				---	1'- 9"	---	1'- 0"	
	7	5	7'- 10"	1A515	STR												
	5	5	9'- 5"	1A516	STR												
	2	5	6'- 7"	1A517	STR												
	3	5	5'- 11"	1A518	STR												
	33	6	7'- 0"	1A601	STR												
	41	6	6'- 1"	1A602	17		---	4'- 3"	1'- 10"								
	67	8	3'- 6"	1A801	STR												
ABUTMENT NO. 2																	
	22	5	21'- 0"	2A501	STR												
	38	5	6'- 8"	2A502	17		---	5'- 9"	0'- 11"								
	31	5	5'- 0"	2A503	STR												
	31	5	6'- 6"	2A504	STR												
	32	5	19'- 6"	2A505	STR												
	37	5	7'- 4"	2A506	S10		2'- 8"	2'- 0"	2'- 8"								
	8	5	4'- 0"	2A507	22		2'- 0"	2'- 0"	---				1'- 9"	---	1'- 0"	---	
	8	5	8'- 10"	2A508	22		2'- 0"	4'- 10"	2'- 0"				1'- 9"	1'- 9"	1'- 0"	1'- 0"	
	4	5	4'- 6"	2A509	22		2'- 0"	2'- 6"	---				1'- 9"	---	1'- 0"	---	
	4	5	5'- 4"	2A510	22		2'- 0"	3'- 4"	---				1'- 9"	---	1'- 9"	---	
	8	5	12'- 8"	2A511	22		2'- 0"	8'- 8"	2'- 0"				1'- 0"	1'- 0"	1'- 9"	1'- 9"	
	8	5	4'- 0"	2A512	22		2'- 0"	2'- 0"	---				1'- 10"	---	1'- 0"	---	
	3	5	4'- 9"	2A513	22		---	2'- 9"	2'- 0"				---	1'- 9"	---	1'- 0"	
	3	5	5'- 2"	2A514	22		---	3'- 2"	2'- 0"				---	1'- 9"	---	1'- 0"	
	7	5	8'- 6"	2A515	STR												
	5	5	10'- 0"	2A516	STR												
	2	5	6'- 6"	2A517	STR												
	3	5	7'- 2"	2A518	STR												
	33	6	7'- 0"	2A601	STR												
	41	6	6'- 1"	2A602	17		---	4'- 3"	1'- 10"								
	41	8	3'- 6"	2A801	STR												
WINGWALL NO. 1																	
	39	5	35'- 2"	1W501	STR												
	96	5	5'- 9"	1W502	17		---	3'- 9"	2'- 0"								
	96	5	9'- 10"	1W503	STR												
	96	5	9'- 2"	1W504	STR												
	60	5	33'- 5"	1W505	STR												
	96	5	4'- 9"	1W506	S10		2'- 0"	0'- 9"	2'- 0"								
	98	6	9'- 0"	1W601	STR												
	96	6	5'- 6"	1W602	17		---	4'- 6"	1'- 0"								
WINGWALL NO. 2																	
▲	10	5	13'- 4"	2W501	STR												
	11	5	4'- 8"	2W502	17		---	3'- 9"	1'- 0"								
	11	5	9'- 7"	2W503	STR												
	9	5	7'- 7"	2W504	STR												
	20	5	10'- 8"	2W505	STR												
	11	5	5'- 5"	2W506	S10		2'- 4"	0'- 9"	2'- 4"								
	11	6	7'- 0"	2W601	STR												
	9	7	6'- 11"	2W701	17		---	5'- 9"	1'- 2"								
WINGWALL NO. 3																	
	20	5	20'- 11"	3W501	STR												
	42	5	4'- 9"	3W502	17		---	3'- 9"	1'- 0"								
	42	5	10'- 6"	3W503	STR												
	39	5	8'- 6"	3W504	STR												
	22	5	40'- 8"	3W505	STR												
	42	5	5'- 7"	3W506	S10		2'- 5"	0'- 9"	2'- 5"								
▲	42	6	7'- 0"	3W601	STR												
	39	7	6'- 11"	3W701	17		---	5'- 9"	1'- 2"								
WINGWALL NO. 4																	
	10	5	15'- 7"	4W501	STR												
	15	5	4'- 9"	4W502	17		---	3'- 9"	1'- 0"								
	15	5	10'- 6"	4W503	STR												
	13	5	8'- 6"	4W504	STR												
	22	5	14'- 8"	4W505	STR												
	15	5	4'- 11"	4W506	S10		2'- 1"	0'- 9"	2'- 1"								
	16	6	7'- 0"	4W601	STR												
	13	7	6'- 11"	4W701	17		---	5'- 9"	1'- 2"								

~ NOTES ~

1. UNLESS OTHERWISE DESIGNATED, ALL BAR REINFORCEMENT FOR CONCRETE IN SIZES UP TO AND INCLUDING NO. 18 SHALL CONFORM TO THE REQUIREMENTS OF THE "SPECIFICATIONS FOR DEFORMED BILLET-STEEL BARS FOR CONCRETE REINFORCEMENT", AASHTO M 31 (ASTM A 615-SI). ALL BARS SHALL BE GRADE 60, UNLESS OTHERWISE DESIGNATED.
2. FOR TYPICAL BENDING DETAILS, RECOMMENDED PIN DIAMETER "D" OF BENDS AND HOOKS, AND OTHER STANDARD PRACTICE, SEE CURRENT CONCRETE REINFORCING STEEL INSTITUTE "MANUAL OF STANDARD PRACTICE".
3. BARS WHICH REQUIRE MORE ACCURATE BENDING THAN STANDARD PRACTICES SHOULD HAVE LIMITS INDICATED.
4. ALL DIMENSIONS ARE OUT TO OUT OF BAR EXCEPT "A" AND "G" ON STANDARD 180 DEGREE AND 135 DEGREE HOOKS.
5. "J" DIMENSION ON 180 DEGREE HOOKS TO BE SHOWN ONLY WHERE NECESSARY TO RESTRICT HOOK SIZE. OTHERWISE, STANDARD HOOKS ARE TO BE USED.
6. "H" DIMENSION ON STIRRUPS TO BE SHOWN ONLY WHEN NECESSARY TO MAINTAIN CLEARANCES.
7. WHERE SLOPE DIFFERS FROM 45 DEGREES, DIMENSIONS "H" AND "K" MUST BE SHOWN.
8. ▲ DENOTES BARS TO BE CUT IN FIELD.
9. ✳ DENOTES ONE EXTRA BAR ADDED FOR TESTING PURPOSES.
10. △ DENOTES TWO EXTRA BARS ADDED FOR TESTING PURPOSES.
11. E IN BAR MARK PREFIX DENOTES EPOXY COATED REINFORCING STEEL.

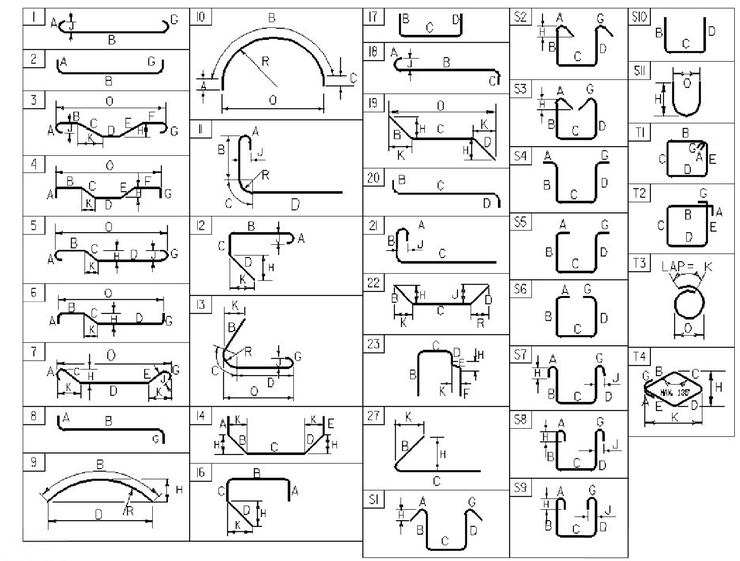

ASTM STANDARD REINFORCING BARS

BAR SIZE DESIGNATION	WEIGHT POUNDS PER FOOT	NOMINAL DIMENSIONS ROUND SECTION: DIAMETER INCHES	AREA INCHES 2	PERIMETER INCHES
#3	0.376	0.375	0.11	1.178
#4	0.668	0.500	0.20	1.571
#5	1.043	0.625	0.31	1.963
#6	1.502	0.750	0.44	2.356
#7	2.044	0.875	0.60	2.749
#8	2.670	1.000	0.79	3.142
#9	3.400	1.128	1.00	3.544
#10	4.303	1.270	1.27	3.990
#11	5.313	1.410	1.56	4.430
#14	7.65	1.693	2.25	5.32
#18	13.60	2.257	4.00	7.09

PROJECT NAME: CORINTH
PROJECT NUMBER: BRO 1447(29)

FILE NAME:
PROJECT MANAGER: M. Chenette
DESIGNED BY: M. Chenette
REINFORCING STEEL SCHEDULE

PLOT DATE: 7/7/2014
DRAWN BY: L. Buxton
CHECKED BY: J. Hungerford
SHEET 42 OF 57

BEGIN PROJECT
STA. 100+80.00

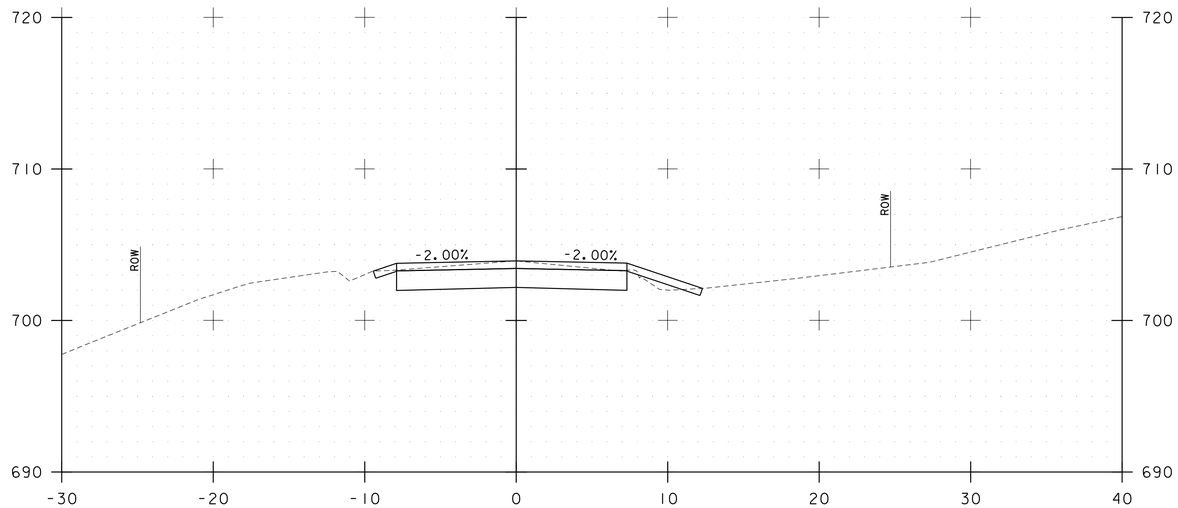

100+75.00

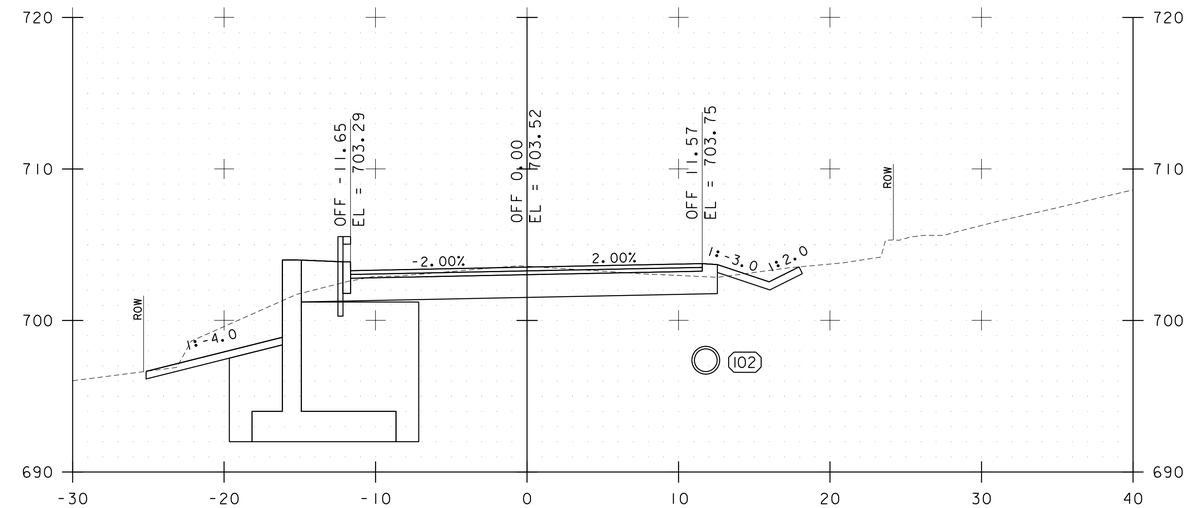

101+25.00

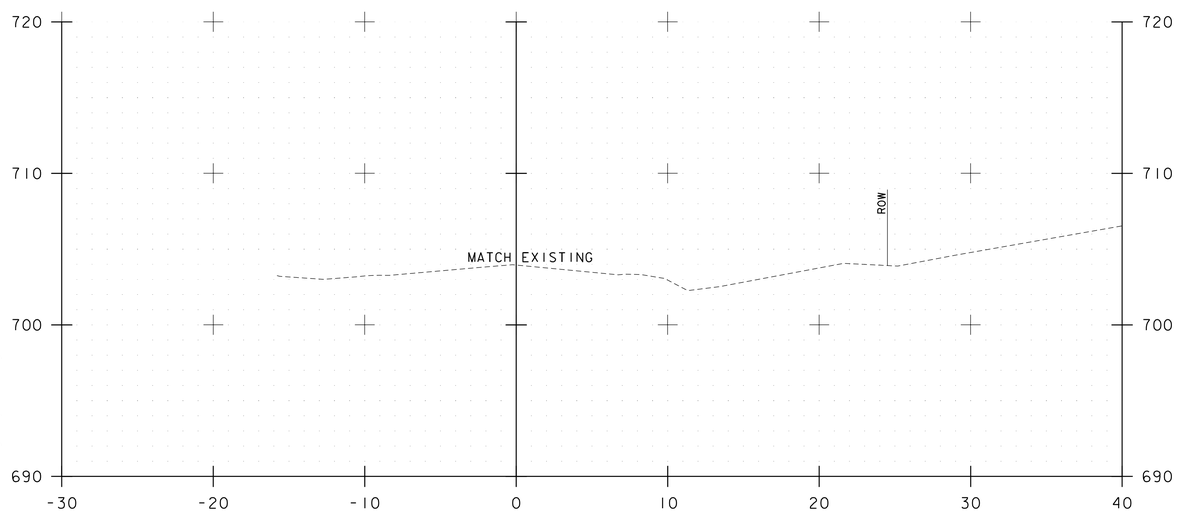

100+40.00

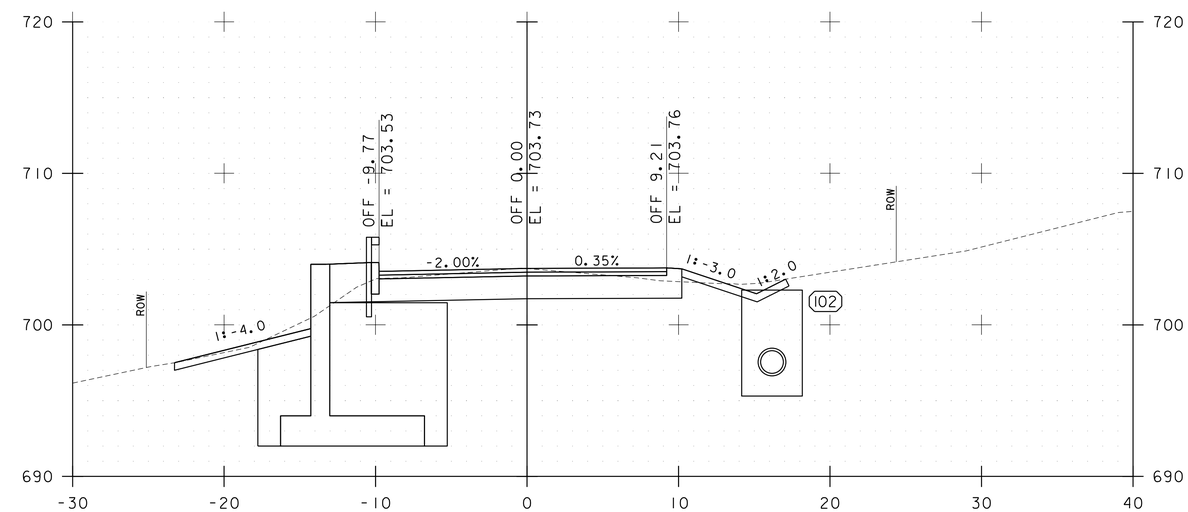

101+00.00

102 STA. 100+90, 16.2' RT
18" PIPE OPTION
INV EL. = 696.80'
DI INLET
GRATE EL. = 702.30'

BEGIN APPROACH
STA. 100+30.00

0 5 10
SCALE: 1"=5'

Stantec

STA. 100+40.00 TO STA. 101+25.00

PROJECT NAME: CORINTH
PROJECT NUMBER: BRO 1447(29)

FILE NAME: ...\drawing\z01j292_xs.dgn
PROJECT LEADER: G. BOGUE
DESIGNED BY: M. CHENETTE
ROADWAY CROSS SECTIONS – RXS 1

PLOT DATE: 8/4/2014
DRAWN BY: E. ALLING
CHECKED BY: G. BOGUE
SHEET 43 OF 57

8/4/2014 12:14:40 PM V:\1953\active\195310795\transportation\drawing\z01j292_xs.dgn

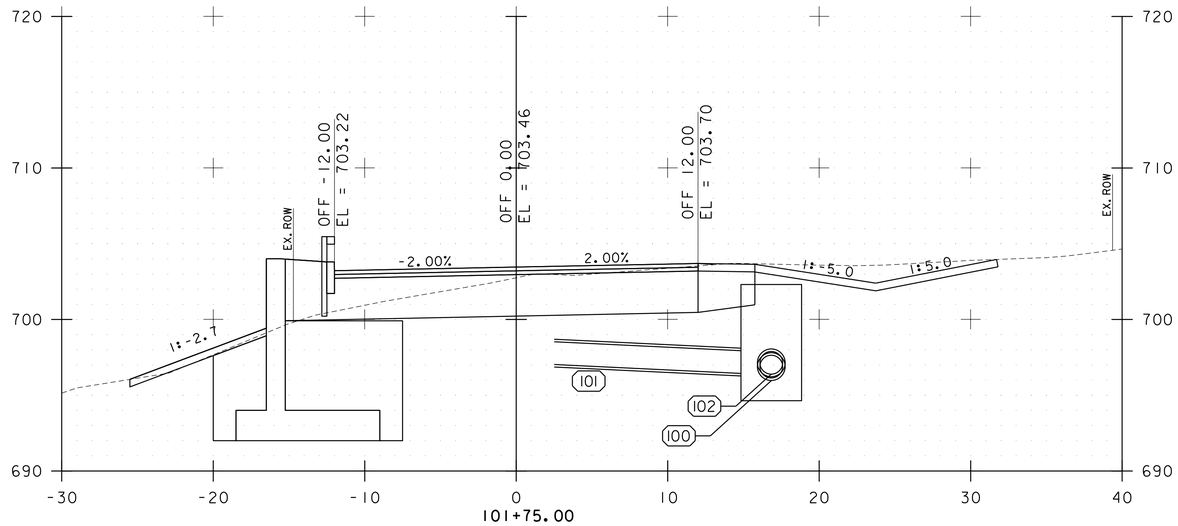

101+75.00

(100) STA. 101+67, 16.8' RT
18" PIPE OPTION
INV EL. = 696.14'
DI INLET
GRATE EL. = 702.31'

(101) STA. 101+67, 16.8' RT
18" PIPE OPTION
INV EL. = 696.39'

(102) STA. 101+67, 16.8' RT
18" PIPE OPTION
INV EL. = 696.39'

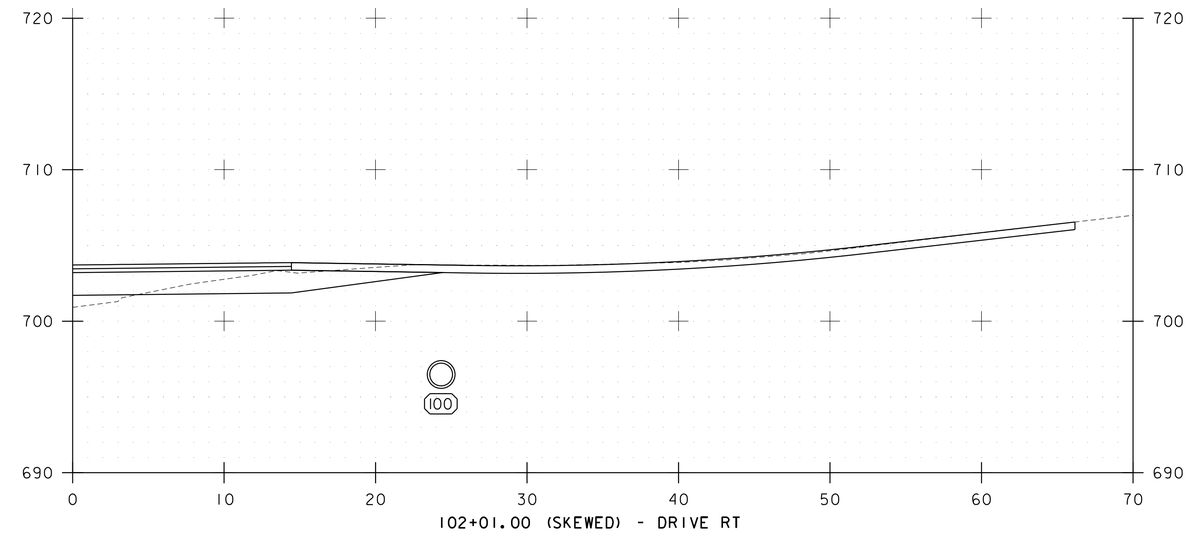

102+01.00 (SKEWED) - DRIVE RT

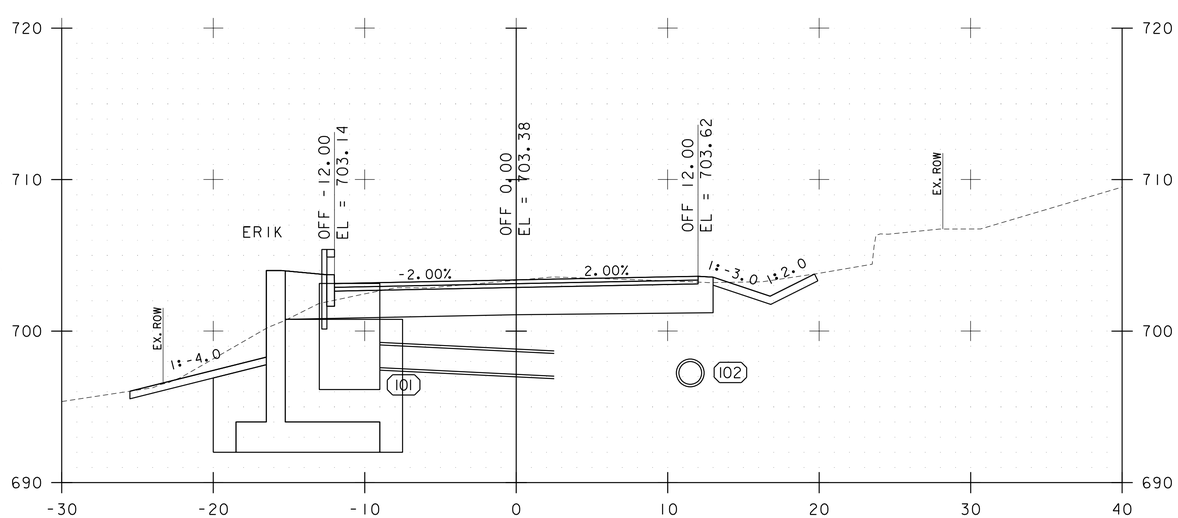

101+50.00

(101) STA. 101+57, 11.0' LT
18" PIPE OPTION
INV EL. = 696.80'
DI INLET
GRATE EL. = 703.14'
USE ECCENTRIC CONE TO
AVOID CONFLICT WITH
GUARDRAIL POSTS

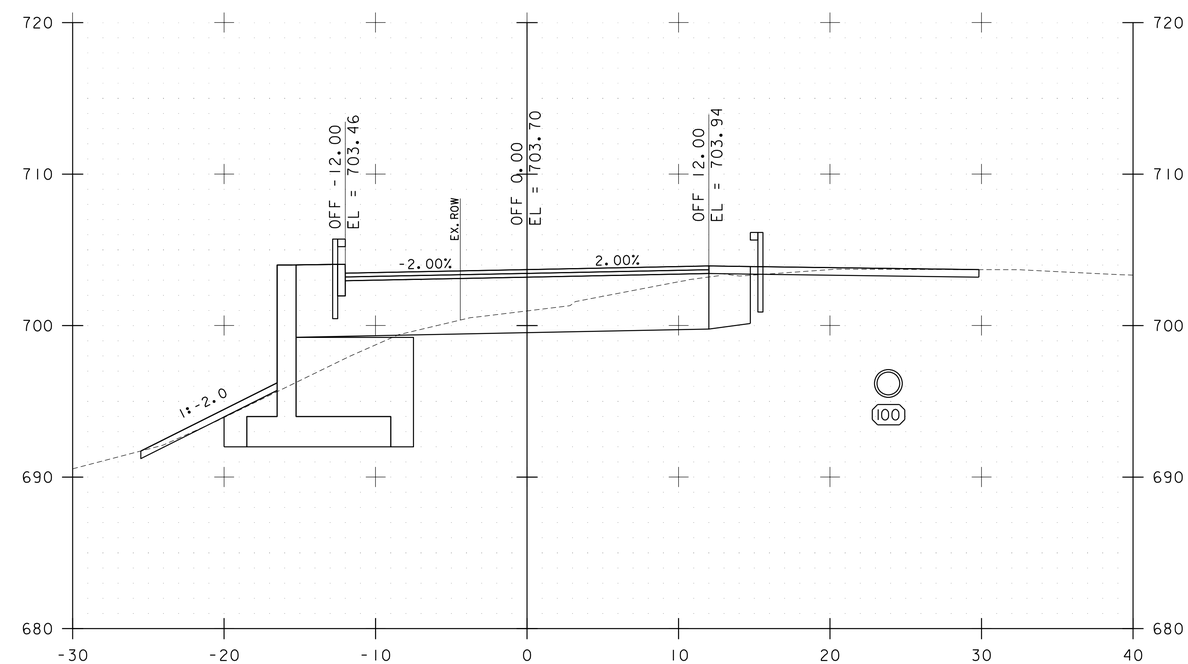

102+00.00

STA. 101+50.00 TO STA. 102+01.00

0 5 10
SCALE: 1"=5'

Stantec

PROJECT NAME: CORINTH	
PROJECT NUMBER: BRO 1447(29)	
FILE NAME: ...\drawing\z01j292_xs.dgn	PLOT DATE: 8/26/2014
PROJECT LEADER: G. BOGUE	DRAWN BY: E. ALLING
DESIGNED BY: M. CHENETTE	CHECKED BY: G. BOGUE
ROADWAY CROSS SECTIONS – RXS 2	SHEET 44 OF 57

8/26/2014 11:43:01 AM V:\1953\active\195310795\transportation\drawing\z01j292_xs.dgn

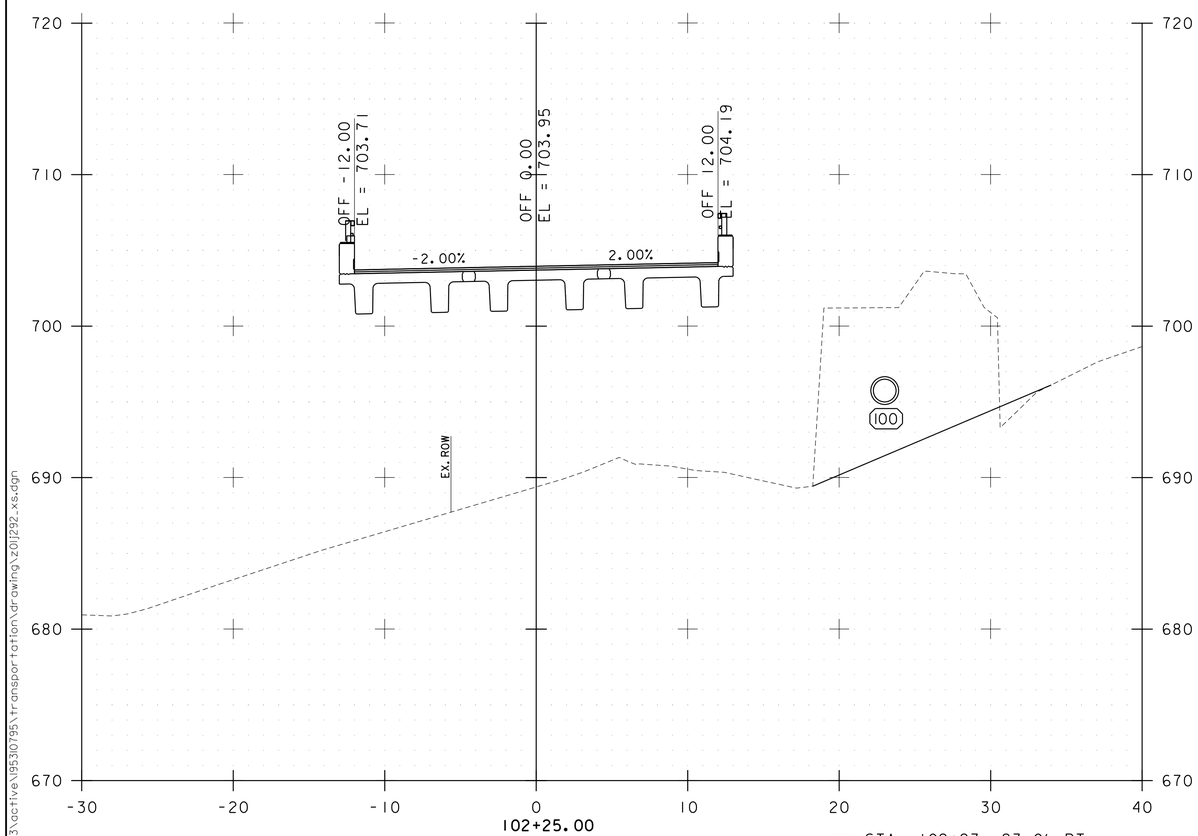

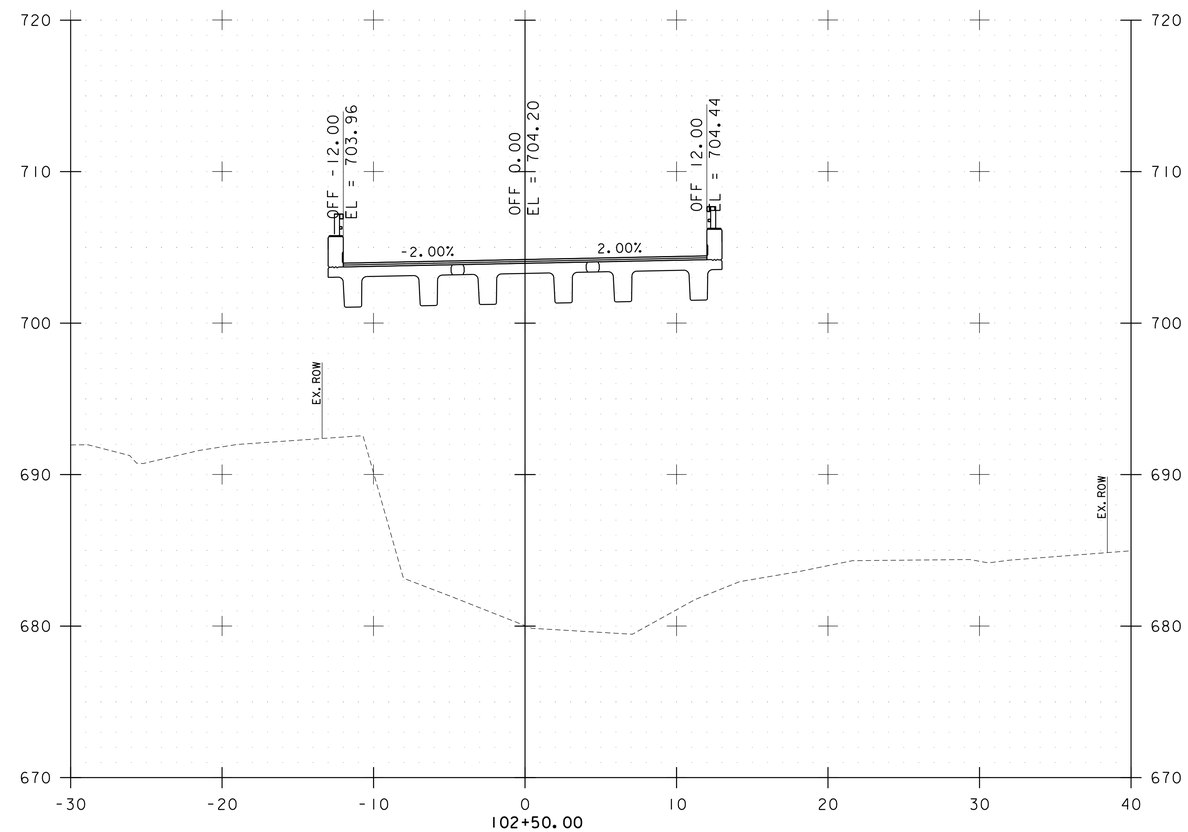

(100) STA. 102+23, 23.0' RT
18" PIPE OPTION
INV EL. = 695.14'

BEGIN BRIDGE
STA. 102+04.40

0 5 10
SCALE: 1"=5'

STA. 102+25.00 TO STA. 102+50.00

PROJECT NAME: CORINTH	
PROJECT NUMBER: BRO 1447(29)	
FILE NAME: ...\drawing\z01j292_xs.dgn	PLOT DATE: 8/4/2014
PROJECT LEADER: G. BOGUE	DRAWN BY: E. ALLING
DESIGNED BY: M. CHENETTE	CHECKED BY: G. BOGUE
ROADWAY CROSS SECTIONS – RXS 3	SHEET 45 OF 57

Stantec

8/4/2014 12:14:41 PM V:\1953\active\195301795\transportation\drawing\z01j292_xs.dgn

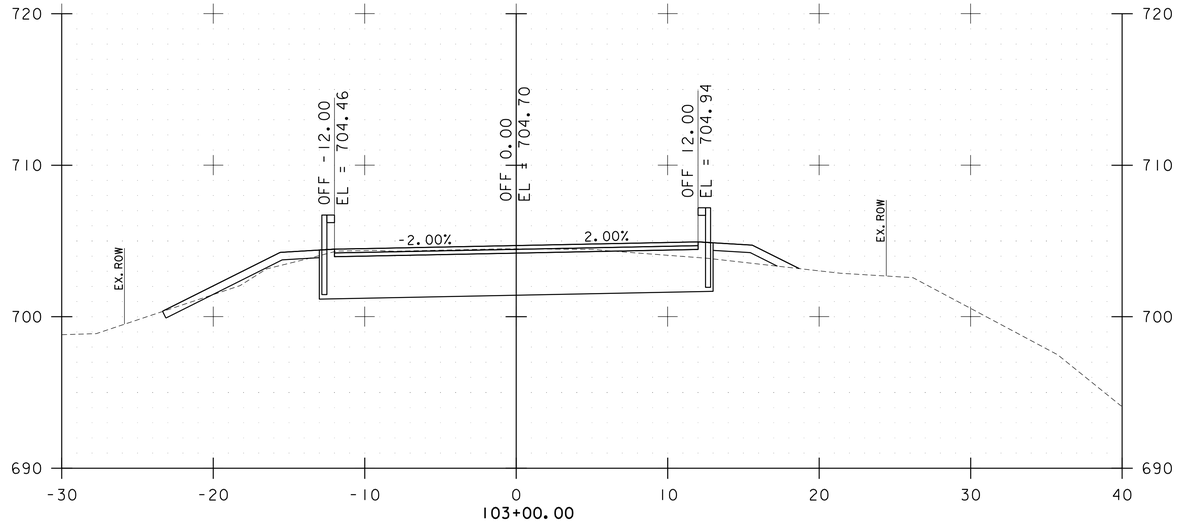

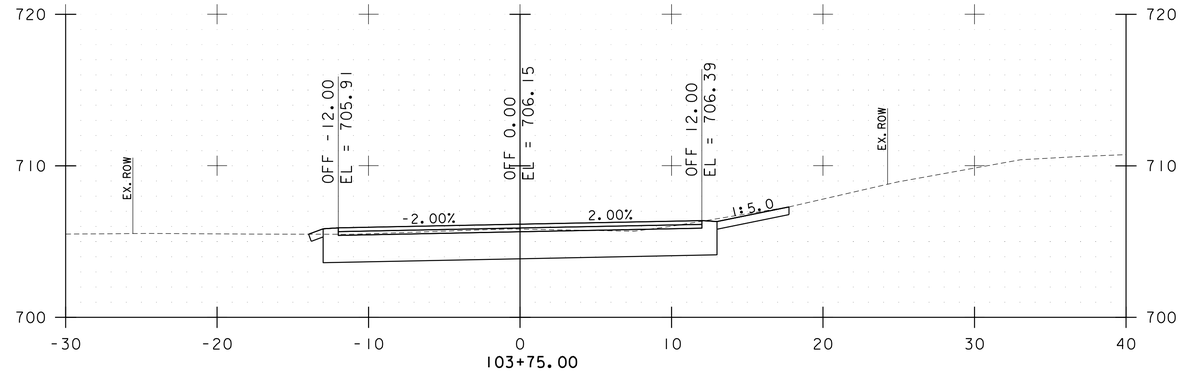

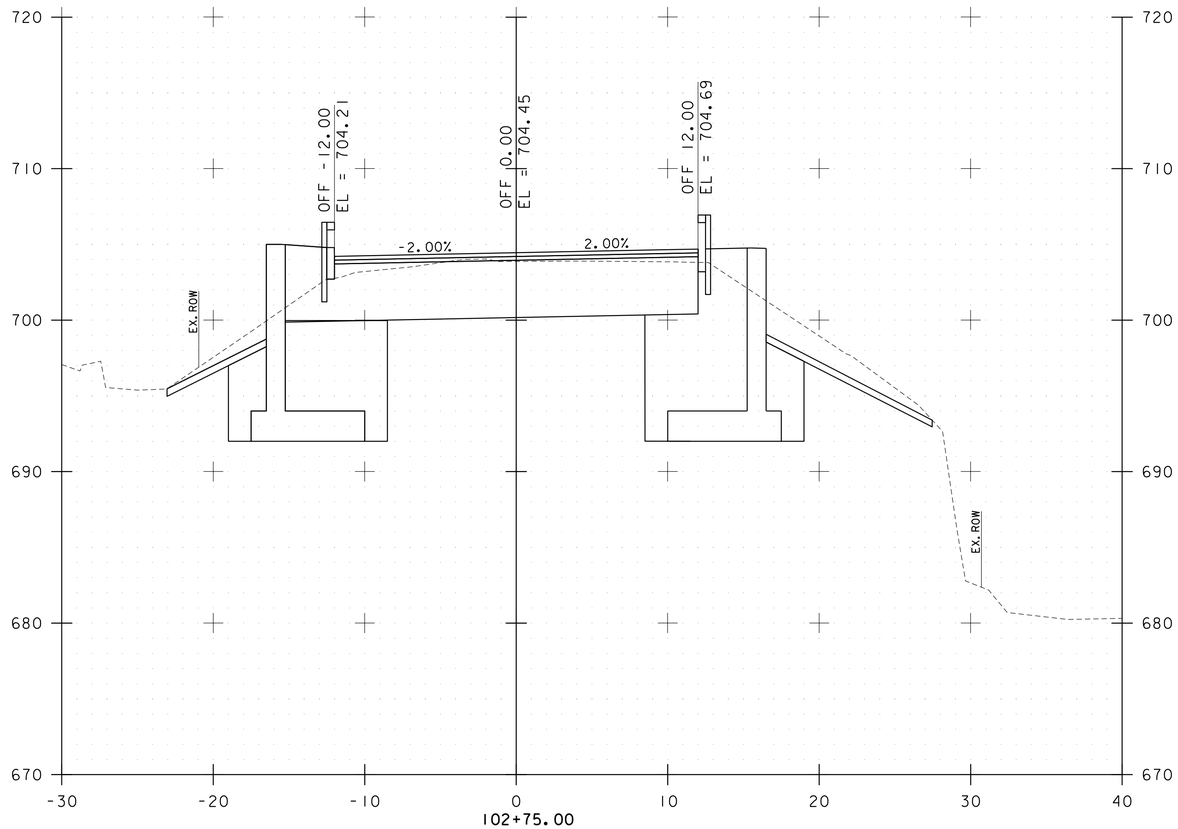

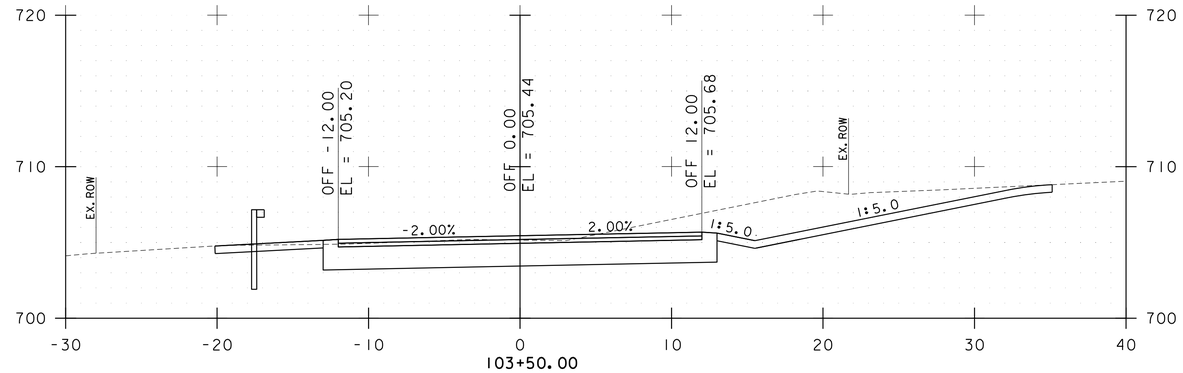

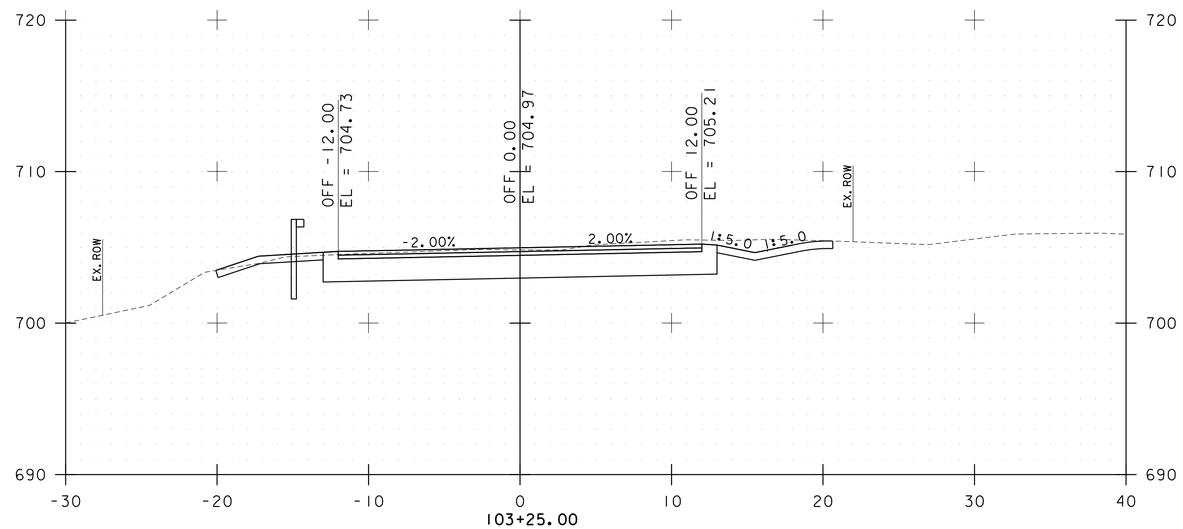

STA. 102+75.00 TO STA. 103+75.00

0 5 10
SCALE: 1"=5'

Stantec

PROJECT NAME: CORINTH	
PROJECT NUMBER: BRO 1447(29)	
FILE NAME: ...\drawing\z01j292_xs.dgn	PLOT DATE: 8/4/2014
PROJECT LEADER: G. BOGUE	DRAWN BY: E. ALLING
DESIGNED BY: M. CHENETTE	CHECKED BY: G. BOGUE
ROADWAY CROSS SECTIONS – RXS 4	SHEET 46 OF 57

8/4/2014 12:14:41 PM V:\1953\active\95310795\transportation\drawing\z01j292_xs.dgn

104+22.94
END PROJECT

MATCH EXISTING

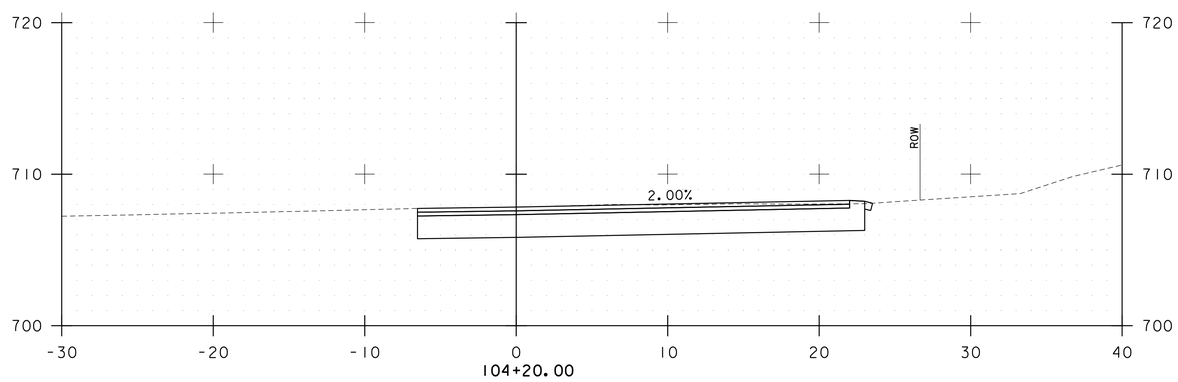

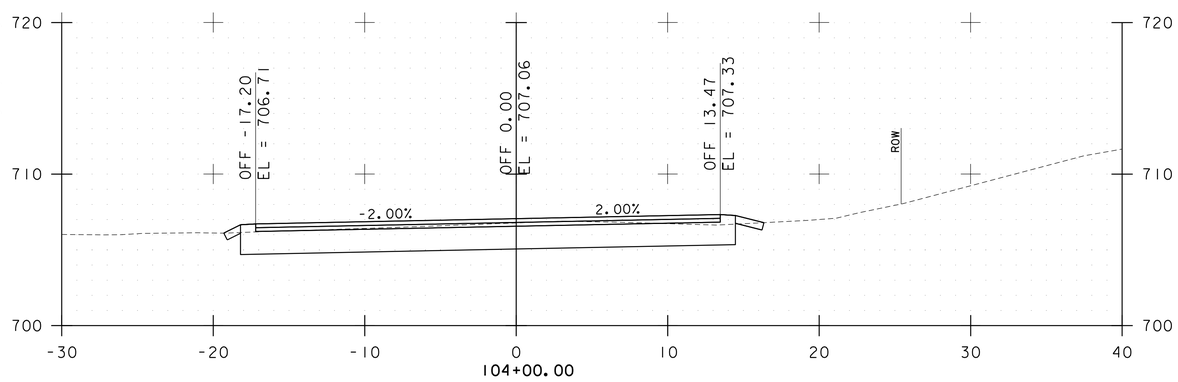

0 5 10
SCALE: 1"=5'

Stantec

STA. 104+00.00 TO STA. 104+20.00

PROJECT NAME: CORINTH
PROJECT NUMBER: BRO 1447(29)

FILE NAME: ...\drawing\z01j292_xs.dgn
PROJECT LEADER: G. BOGUE
DESIGNED BY: M. CHENETTE
ROADWAY CROSS SECTIONS – RXS 5

PLOT DATE: 8/4/2014
DRAWN BY: E. ALLING
CHECKED BY: G. BOGUE
SHEET 47 OF 57

8/4/2014 12:14:42 PM V:\1953\active\195310795\transportation\drawing\z01j292_xs.dgn

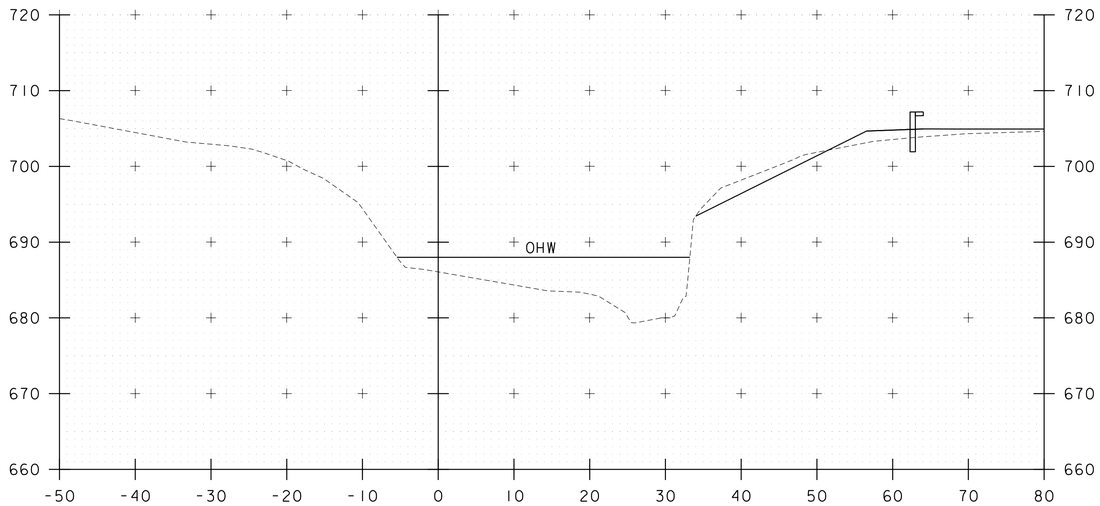

STA. 50+57 RT.
BEGIN UNCLASSIFIED CHANNEL EXCAVATION

50+60

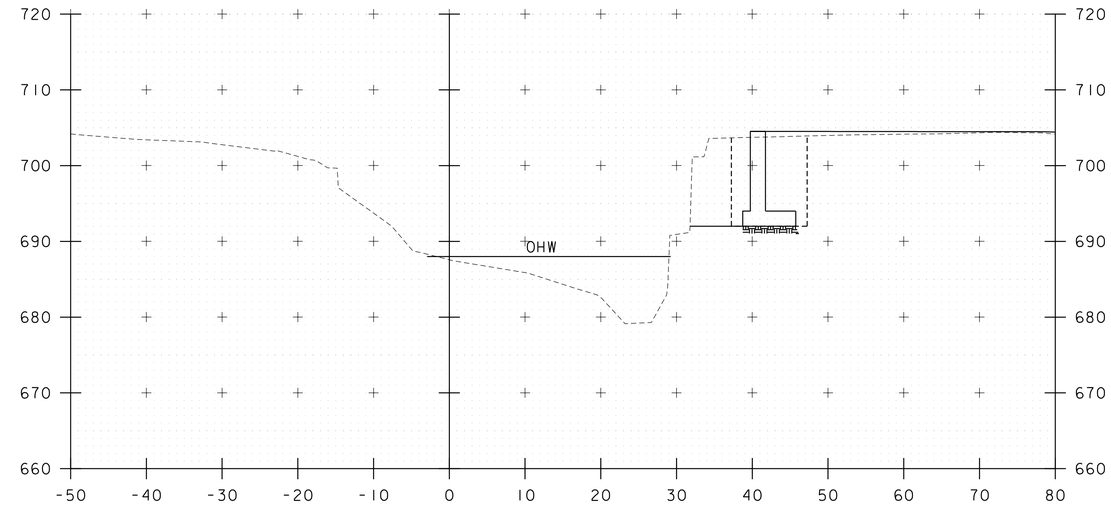

50+80

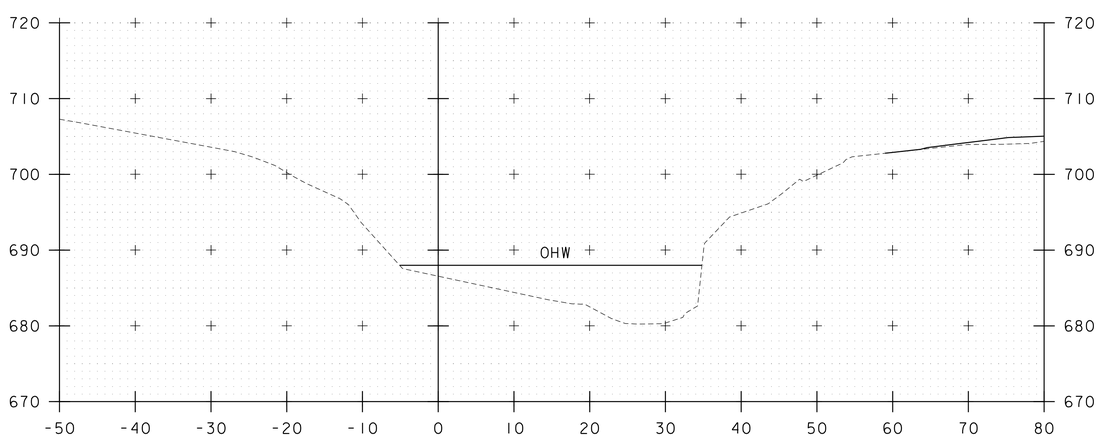

50+50

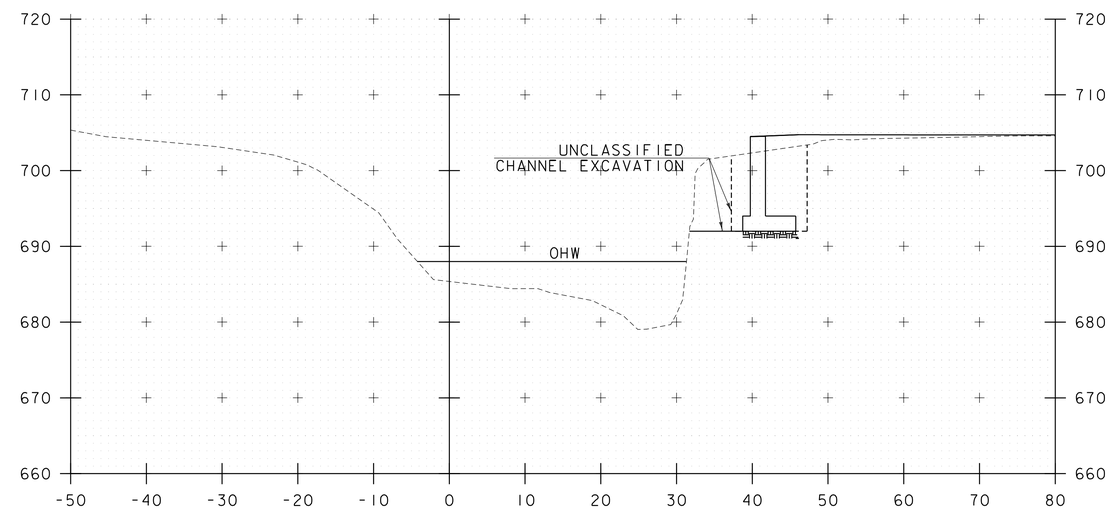

50+70

0 10 20
SCALE: 1"=10'

STA. 50+50 TO STA. 50+80

PROJECT NAME: CORINTH
PROJECT NUMBER: BRO 1447(29)

FILE NAME: ...\drawing\z01j292_xs_channel.dgn PLOT DATE: 8/4/2014
PROJECT LEADER: G. BOGUE DRAWN BY: E. ALLING
DESIGNED BY: M. CHENETTE CHECKED BY: G. BOGUE
CHANNEL CROSS SECTIONS – CXS 1 SHEET 48 OF 57

Stantec

8/4/2014 12:14:43 PM V:\1953\active\195310795\transportation\drawing\z01j292_xs_channel.dgn

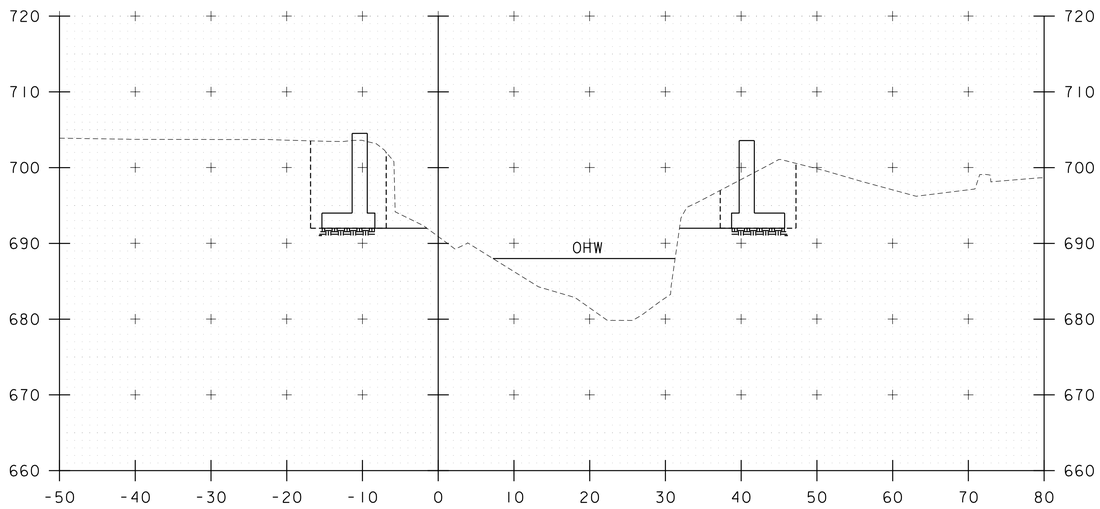

STA. 50+96 LT.
BEGIN UNCLASSIFIED CHANNEL EXCAVATION

STA. 51+08 RT.
END UNCLASSIFIED CHANNEL EXCAVATION

51+00

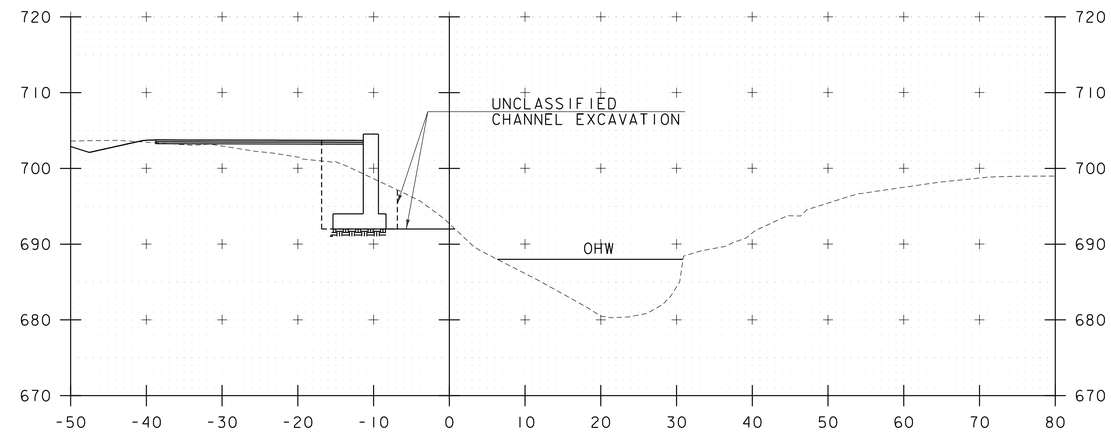

51+20

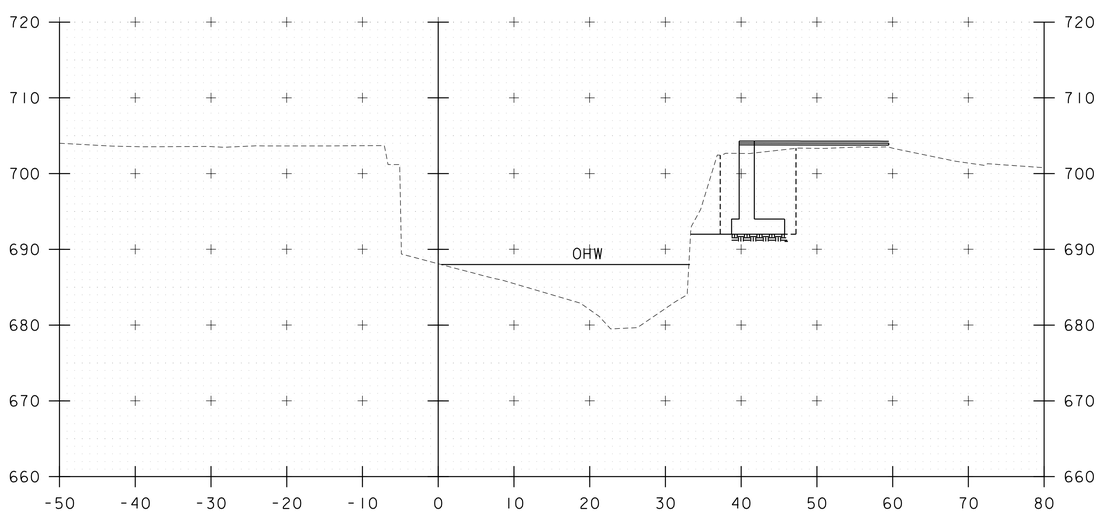

50+90

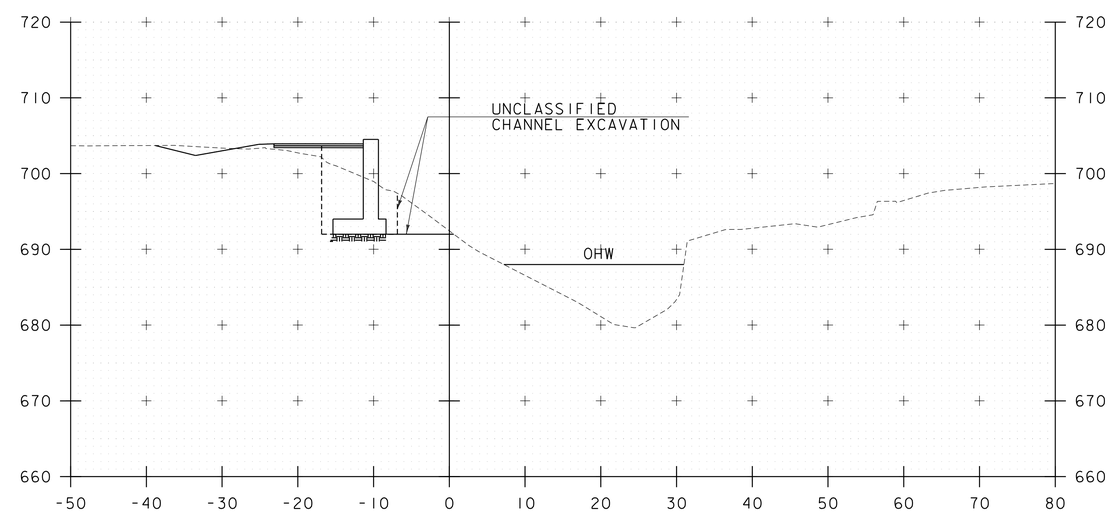

51+10

0 10 20
SCALE: 1"=10'

STA. 50+90 TO STA. 51+20

PROJECT NAME: CORINTH
PROJECT NUMBER: BRO 1447(29)

FILE NAME: ...\drawing\z01j292_xs_channel.dgn PLOT DATE: 8/4/2014
PROJECT LEADER: G. BOGUE DRAWN BY: E. ALLING
DESIGNED BY: M. CHENETTE CHECKED BY: G. BOGUE
CHANNEL CROSS SECTIONS – CXS 2 SHEET 49 OF 57

Stantec

8/4/2014 12:14:44 PM V:\1953\active\195310795\transportation\drawing\z01j292_xs_channel.dgn

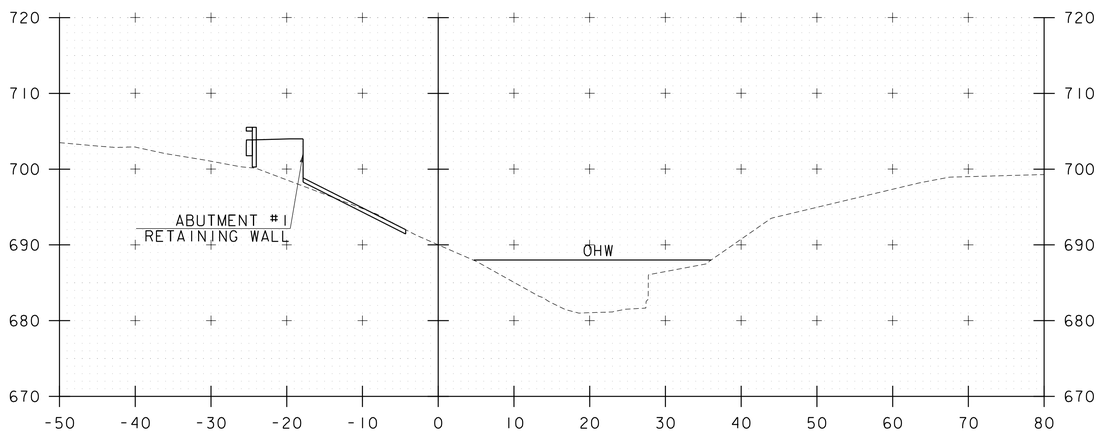

51+40

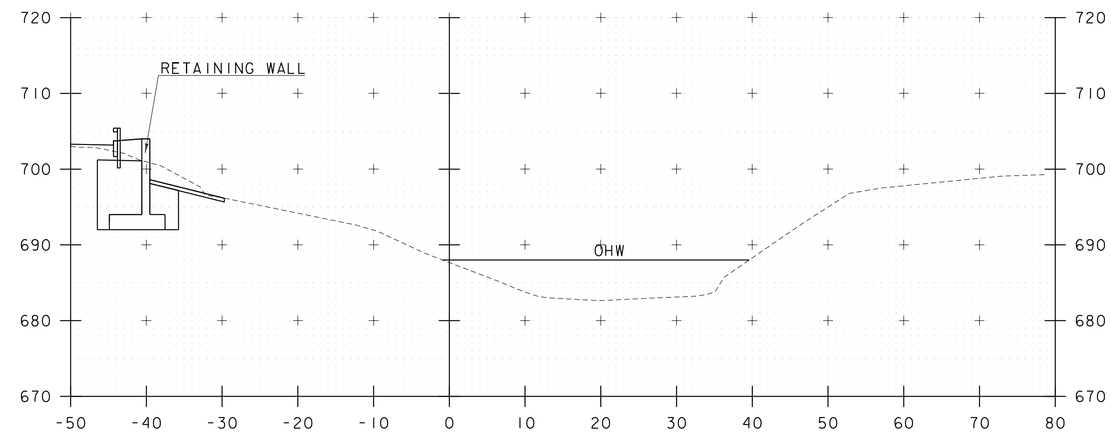

51+67

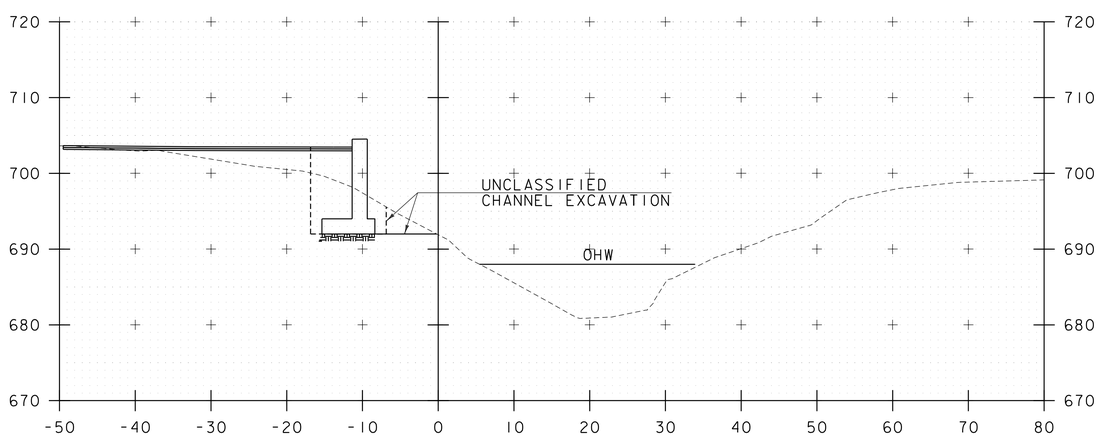

51+30

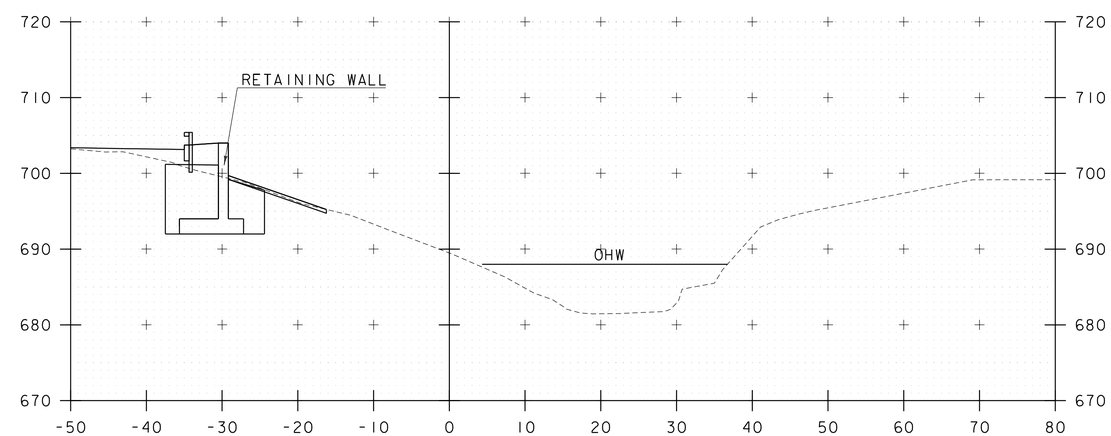

STA. 51+42.33 LT.
END UNCLASSIFIED CHANNEL EXCAVATION

51+50

0 10 20
SCALE: 1"=10'

Stantec

STA. 51+30 TO STA. 51+67

PROJECT NAME: CORINTH
PROJECT NUMBER: BRO 1447(29)

FILE NAME: ...\drawing\z01j292_xs_channel.dgn PLOT DATE: 8/4/2014
PROJECT LEADER: G. BOGUE DRAWN BY: E. ALLING
DESIGNED BY: M. CHENETTE CHECKED BY: G. BOGUE
CHANNEL CROSS SECTIONS – CXS 3 SHEET 50 OF 57

8/4/2014 12:14:44 PM V:\1953\active\195310795\transportation\drawing\z01j292_xs_channel.dgn

EPSC PLAN NARRATIVE

1.1 PROJECT DESCRIPTION

THIS PROJECT INVOLVES THE REPLACEMENT OF BRIDGE #36, RELATED ROADWAY APPROACH AND CHANNEL WORK AND INCIDENTALS. BRIDGE #36 WILL BE REPLACED WITH A PRECAST CONCRETE BRIDGE OVER TABOR BRANCH, ON NEW FOOTINGS AND ON A NEW ALIGNMENT. BRIDGE #36 IS LOCATED IN THE TOWN OF CORINTH, CHICKEN FARM ROAD (T.H. 16), AT THE INTERSECTION WITH EAST CORINTH ROAD (T.H. 1). THE LENGTH OF THE BRIDGE WILL BE INCREASED TO 65 FEET.

NOTE: AREA OF DISTURBANCE INCLUDES LIMITS OF EARTH DISTURBANCE WITHIN THE PROJECT AREA, AS WELL AS WASTE, BORROW AND STAGING AREAS, AND OTHER EARTH DISTURBING ACTIVITIES WITHIN OR DIRECTLY ADJACENT TO THE PROJECT LIMITS AS SHOWN ON THE ATTACHED EPSC PLAN.

TOTAL AREA OF DISTURBANCE AS SHOWN ON THE ATTACHED EPSC PLAN IS APPROXIMATELY 0.55 ACRES.

IT IS ANTICIPATED THAT THIS PROJECT WILL LAST ONE CONSTRUCTION SEASON.

1.2 SITE INVENTORY

1.2.1 TOPOGRAPHY

THE TOPOGRAPHY OF THE IMMEDIATE PROJECT AREA IS RELATIVELY FLAT AND FEATURES GRASSED LAWN AREAS, UNDERGROWTH ALONG BOTH BANKS OF TABOR BRANCH AND SMALL TO MEDIUM-SIZED TREES. EAST CORINTH ROAD AND TABOR BRANCH ROAD ARE WITHIN THE PROJECT SITE. THERE ARE THREE HOUSES ADJACENT TO THE SITE, AND SEVERAL ADDITIONAL HOUSES ALONG BOTH CHICKEN FARM AND EAST CORINTH ROADS.

1.2.2 DRAINAGE, WATERWAYS, BODIES OF WATER, AND PROXIMITY TO NATURAL OR MAN-MADE WATER FEATURES

THE TABOR BRANCH IS THE ONLY WATER SOURCE ON THE PROJECT SITE. THE TABOR BRANCH IS CLASSIFIED AS STRAIGHT AND NARROW, WITH A CONFINED CHANNEL THAT CUTS THROUGH LEDGE AT THE SITE. THE STREAM BED CONSISTS OF FINES, GRAVEL, COBBLES AND BOULDERS. DUE TO THE NATURE OF THE SURROUNDING TERRAIN THE PROJECT SITE COULD RECEIVE RUNOFF WATER FROM A FEW NEARBY SLOPES.

1.2.3 VEGETATION

THE VEGETATION IN THE PROJECT AREA CONSISTS OF OPEN GRASSED AREAS, HARDWOOD TREES AND UNDERGROWTH. THE IMPACT TO VEGETATION WILL BE LIMITED TO THE PROPOSED TOE OF SLOPE SHOWN ON THE PLANS. THE CHANNEL WILL NOT BE AFFECTED BY CONSTRUCTION. DISTURBED VEGETATION WILL BE REESTABLISHED WITH STANDARD SEED AND MULCH PRACTICES.

1.2.4 SOILS

ALL SOIL DATA CAME FROM THE U.S. DEPARTMENT OF AGRICULTURE SOIL CONSERVATION SERVICE FOR THE COUNTY OF FRANKLIN, VERMONT. SOILS ON THE PROJECT SITE ARE THE WESTERLY BANK FEATURES AGAWAM FINE SANDY LOAM, “K FACTOR” = 0.28 AND THE EASTERLY BANK CONSISTS OF WINDSOR LOAMY FINE SAND, “K FACTOR” = 0.17. THE AGAWAM FINE SANDY LOAM IS CONSIDERED MODERATELY ERODIBLE DUE TO K-VALUE WHILE THE WINDSOR LOAMY FINE SAND IS CONSIDERED TO HAVE LOW EROSION POTENTIAL.

NOTE: K-VALUES GENERALLY INDICATE THE FOLLOWING:
0.0-0.23 = LOW EROSION POTENTIAL
0.24-0.36 = MODERATE EROSION POTENTIAL
0.37 AND HIGHER = HIGH EROSION POTENTIAL

1.2.5 SENSITIVE RESOURCE AREAS

CRITICAL HABITATS: NO
HISTORICAL OR ARCHEOLOGICAL AREAS: EAST CORINTH HISTORIC DISTRICT
PRIME AGRICULTURAL LAND: NO
THREATENED AND ENDANGERED SPECIES: NO
WATER RESOURCE: TABOR BRANCH
WETLANDS: NO

1.3 RISK EVALUATION

THIS PROJECT DOES NOT FALL UNDER THE JURISDICTION OF GENERAL PERMIT 3-9020 FOR STORMWATER RUNOFF FROM CONSTRUCTION SITES. SHOULD CHANGES PRIOR TO OR DURING CONSTRUCTION RESULT IN ONE OR MORE ACRES OF EARTH DISTURBANCE OR SHOULD THE PROJECT BECOME PART OF A LARGER PLAN OF DEVELOPMENT, THE CONTRACTOR WILL BE RESPONSIBLE FOR ANY ADDITIONAL PERMITTING.

1.4 EROSION PREVENTION AND SEDIMENT CONTROL

THE EROSION CONTROL PLANS ARE MEANT AS A GUIDELINE FOR PREVENTING EROSION AND CONTROLLING SEDIMENT TRANSPORT. THE PRINCIPLES OUTLINED IN THIS NARRATIVE CONSIST OF APPLYING MEASURES THROUGHOUT CONSTRUCTION OF THE PROJECT IN ORDER TO MINIMIZE SEDIMENT TRANSPORT TO THE RECEIVING WATERS. THE MEASURES INCLUDE STABILIZATION AND STRUCTURAL PRACTICES, STORM WATER CONTROLS AND OTHER POLLUTION PREVENTION PRACTICES. THEY HAVE BEEN PROPOSED BY THE DESIGNER AS A BASIS FOR PROTECTING RESOURCES AND WILL NEED TO BE BUILT UPON BASED ON THE SPECIFIC MEANS AND METHODS OF THE CONTRACTOR. REFER TO THE LOW RISK SITE HANDBOOK AND APPROPRIATE DETAIL SHEETS FOR SPECIFIC GUIDANCE AND CONSTRUCTION DETAILING.

ALL MEASURES SHALL BE REGULARLY MAINTAINED AND SHALL BE CHECKED FOR SEDIMENT BUILD-UP. SEDIMENT SHALL BE DISPOSED OF AT AN APPROVED SITE WHERE IT WILL NOT BE SUBJECT TO EROSION.

1.4.1 MARK SITE BOUNDARIES

SITE BOUNDARIES AND AREAS CONSTRUCTION EQUIPMENT CAN ACCESS SHALL BE DELINEATED.

PROJECT DEMARCATION FENCING (PDF) SHALL BE USED TO PHYSICALLY MARK SITE BOUNDARIES.

1.4.2 LIMIT DISTURBANCE AREA

PREVENTING INITIAL SOIL EROSION BY MINIMIZING THE EXPOSED AREA IS MUCH MORE EFFECTIVE THAN TREATING ERODED SEDIMENT. EARTH DISTURBANCE CAN BE MINIMIZED THROUGH CONSTRUCTION PHASING BY ONLY OPENING UP EARTH AS NECESSARY. THIS CAN LIMIT THE AREA THAT WILL BE DISTURBED AND EXPOSED TO EROSION. EMPLOY TEMPORARY CONSTRUCTION STABILIZATION PRACTICES IN INCREMENTAL STAGES AS PHASES CHANGE. FOR PROJECTS WHICH FALL UNDER THE CONSTRUCTION GENERAL PERMIT, ONLY THE ACREAGE LISTED ON THE PERMIT AUTHORIZATION MAY BE EXPOSED AT ANY GIVEN TIME.

MAINTAINING VEGETATED BUFFERS ALONG STREAM BANKS, WETLANDS OR OTHER SENSITIVE AREAS IS A CRUCIAL EROSION AND SEDIMENT CONTROL MEASURE THAT SHOULD BE ESTABLISHED WHEREVER POSSIBLE.

1.4.3 SITE ENTRANCE/EXIT STABILIZATION

TRACKING OF SEDIMENT ONTO PUBLIC HIGHWAYS SHALL BE MINIMIZED TO REDUCE THE POTENTIAL FOR RUNOFF ENTERING RECEIVING WATERS. INSTALLATION SHALL COINCIDE WITH THE CONTRACTOR’S PROGRESS SCHEDULE.

STABILIZED CONSTRUCTION ENTRANCES SHALL BE INSTALLED AS PROPOSED ON THE EPSC PLAN AND ANYWHERE EQUIPMENT WILL BE GOING FROM AREAS OF EXPOSED SOILS TO PAVED SURFACES.

1.4.4 INSTALL SEDIMENT BARRIERS

SEDIMENT BARRIERS SHALL BE UTILIZED TO INTERCEPT RUNOFF AND ALLOW SUSPENDED SEDIMENT TO SETTLE OUT. THEY SHALL BE INSTALLED PRIOR TO ANY UP SLOPE WORK.

SILT FENCE AND INLET PROTECTION DEVICES SHALL BE USED AT THE LOCATIONS SHOWN ON THE EPSC PLAN.

1.4.5 DIVERT UPLAND RUNOFF

DIVERSIONARY MEASURES SHALL BE USED TO INTERCEPT RUNOFF FROM ABOVE THE CONSTRUCTION AND DIRECT IT AROUND THE DISTURBED AREA SO THAT CLEAN WATER DOES NOT BECOME MUDDIED WHILE TRAVELING OVER EXPOSED SOILS ON THE CONSTRUCITON SITE.

THE PROJECT AREA IS RELATIVELY FLAT WITH MINIMAL OFF-SITE RUNOFF FLOWING THROUGH THE SITE. THERFORE DIVERSION MEASURES WILL NOT BE NECESSARY.

1.4.6 SLOW DOWN CHANNELIZED RUNOFF

CHECK STRUCTURES SHALL BE UTILIZED TO REDUCE THE VELOCITY, AND THUS THE EROSIVE POTENTIAL, OF CONCENTRATED FLOW IN CHANNELS.

CHECK DAMS TO BE INSTALLED AT THE LOCATIONS SHOWN ON THE EPSC PLAN.

1.4.7 CONSTRUCT PERMANENT CONTROLS

THERE ARE NO PERMANENT STORMWATER TREATMENT DEVICES TO BE INSTALLED WITH THIS PROJECT.

1.4.8 STABILIZE EXPOSED SOILS DURING CONSTRUCTION

ALL AREAS OF DISTURBANCE MUST HAVE TEMPORARY STABILIZATION IN PLACE WITHIN 48 HOURS OF DISTURBANCE OR IN ACCORDANCE WITH THE CONSTRUCTION GENERAL PERMIT 3-9020 AUTHORIZATION.

SURFACE ROUGHENING OF ALL EXPOSED SLOPES, COMBINED WITH TEMPORARY MULCHING, SHALL BE UTILIZED ON A REGULAR BASIS. BIODEGRADABLE EROSION CONTROL MATTING OR AN EQUIVALENT SHALL BE USED TO STABILIZE ALL SLOPES STEEPER THAN 1:3.

THE FORECAST OF RAINFALL EVENTS SHALL TRIGGER IMMEDIATE PROTECTION OF EXPOSED SOILS.

1.4.9 WINTER STABILIZATION

VARIOUS MEASURES SPECIFIC TO WINTER MAY BE NECESSARY SHOULD THE PROJECT EXTEND INTO WINTER (OCTOBER 15 THROUGH APRIL 15). REFER TO THE LOW RISK SITE HANDBOOK FOR GUIDANCE.

1.4.10 STABILIZE SOIL AT FINAL GRADE

EXPOSED SOIL MUST BE STABILIZED WITHIN 48 HOURS OF REACHING FINAL GRADE.

SEED, MULCH, FERTILIZER AND LIME SHALL BE USED TO ESTABLISH PERMANENT VEGETATION. FOR SLOPES STEEPER THAN 1:3, BIODEGRADABLE EROSION CONTROL MATTING OR AN EQUIVALENT SHALL BE USED INSTEAD OF MULCH.

1.4.11 DE-WATERING ACTIVITIES

IT IS NOT ANTICIPATED THAT DEWATERING ACTIVITIES WILL BE REQUIRED.

1.4.12 INSPECT YOUR SITE

INSPECT THE PROJECT SITE BASED ON SPECIAL PROVISION REQUIREMENTS.

1.5 SEQUENCE AND STAGING

THIS SECTION WILL BE DEVELOPED BY THE CONTRACTOR USING THE GUIDANCE OUTLINED IN THE VTRANS EPSC PLAN CONTRACTOR CHECKLIST.

1.5.2 OFF-SITE ACTIVITIES

IN ADDITION TO THE CONTRACTOR CHECKLIST ANY ACTIVITIES OUTSIDE THE CONSTRUCTION LIMITS SHALL FOLLOW SUBSECTIONS 105.25- 105.29 OF THE STANDARD SPECIFICATIONS FOR CONSTRUCTION.

1.5.3 UPDATES

PROJECT NAME: CORINTH	
PROJECT NUMBER: BRO 1447(29)	
FILE NAME: ...\drawing\z01j292_bdr_ero.dgn	PLOT DATE: 8/26/2014
PROJECT LEADER: G. BOGUE	DRAWN BY: E. ALLING
DESIGNED BY: E. ALLING	CHECKED BY: T. LUTHER
EPSC CONSTRUCTION SITE PLAN – ECP 1	SHEET 52 OF 57

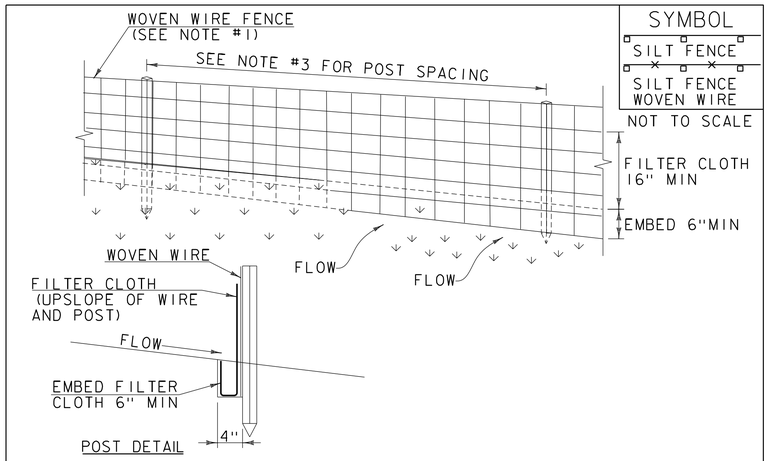

CONSTRUCTION SPECIFICATIONS

1. WOVEN WIRE REINFORCED FENCE IS REQUIRED WITHIN 100' UPSLOPE OF RECEIVING WATERS WHEN THE PROJECT FALLS UNDER A CONSTRUCTION STORMWATER PERMIT. WOVEN WIRE SHALL BE A MIN. 14 GAUGE WITH A 6" MAX. MESH OPENING.
2. FILTER CLOTH SHALL BE EITHER FILTER X, MIRAFI100X, STABILINKA T140N OR APPROVED EQUIVALENT.
3. POST SPACING FOR WIRE-BACKED FENCE SHALL BE 10' MAXIMUM. FOR FILTER-CLOTH FENCE, WHEN ELONGATION IS >50%, POST SPACING SHALL NOT EXCEED 4' AND WHEN ELONGATION IS <50%, POST SPACING SHALL NOT EXCEED 6'.
4. WOVEN WIRE FENCE IS TO BE FASTENED SECURELY TO FENCE POSTS WITH WIRE TIES. FILTER CLOTH IS TO BE FASTENED SECURELY TO WOVEN WIRE FENCE WITH TIES SPACED EVERY 24" AT TOP AND MID SECTION.
5. WHEN TWO SECTIONS OF FILTER CLOTH ADJOIN EACH OTHER THEY SHALL BE OVER-LAPPED BY 6" AND FOLDED.
6. MAINTENANCE SHALL BE PERFORMED AS NEEDED AND MATERIAL REMOVED WHEN SEDIMENT REACHES HALF OF FABRIC HEIGHT.

ADAPTED FROM DETAILS PROVIDED BY: NEW YORK STATE DEC
ORIGINALLY DEVELOPED BY USDA-NRCS
VERMONT DEPARTMENT OF ENVIRONMENTAL CONSERVATION

SILT FENCE

NOTES:
REFER TO "THE VERMONT STANDARDS & SPECIFICATIONS FOR EROSION PREVENTION & SEDIMENT CONTROL -2006- " FROM THE VT AGENCY OF NATURAL RESOURCES FOR ADDITIONAL GUIDANCE.

THIS WORK SHALL BE PERFORMED IN ACCORDANCE WITH SECTION 649 AND AS SHOWN IN THE PLANS FOR GEOTEXTILE FOR SILT FENCE (PAY ITEM 649.51) OR GEOTEXTILE FOR SILT FENCE, WOVEN WIRE REINFORCED (PAY ITEM 649.515).

REVISIONS	
MARCH 21, 2008	WHF
DECEMBER 11, 2008	WHF
JANUARY 13, 2009	WHF

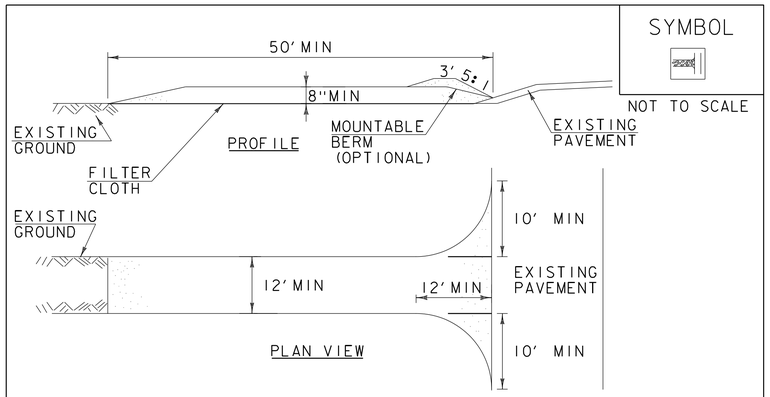

CONSTRUCTION SPECIFICATIONS

1. STONE SIZE- USE 1-4" STONE, RECLAIMED OR RECYCLED CONCRETE EQUIVALENT.
2. LENGTH- NOT LESS THAN 50' (EXCEPT ON A SINGLE RESIDENCE LOT WHERE A 30' MINIMUM LENGTH APPLIES).
3. THICKNESS- NOT LESS THAN 8".
4. WIDTH- 12' MINIMUM, BUT NOT LESS THAN THE FULL WIDTH AT POINTS WHERE INGRESS OR EGRESS OCCURS. 24' IF SINGLE ENTRANCE TO SITE.
5. GEOTEXTILE MUST BE PLACED OVER THE ENTIRE AREA PRIOR TO PLACING STONE.
6. SURFACE WATER- ALL SURFACE WATER FLOWING OR DIVERTED TOWARD CONSTRUCTION ENTRANCES SHALL BE PIPED BENEATH THE ENTRANCE. IF PIPING IS IMPRACTICAL, A MOUNTABLE BERM WITH 5:1 SLOPES WILL BE PERMITTED.
7. MAINTENANCE- THE ENTRANCE SHALL BE MAINTAINED IN A CONDITION WHICH WILL PREVENT TRACKING OR FLOWING OF SEDIMENT ONTO PUBLIC RIGHTS-OF-WAY, ALL SEDIMENT SPILLED, DROPPED, WASHED OR TRACKED ONTO PUBLIC RIGHTS-OF-WAY MUST BE REMOVED IMMEDIATELY.
8. WHEN WASHING IS REQUIRED, IT SHALL BE DONE ON AN AREA STABILIZED WITH STONE AND WHICH DRAINS INTO AN APPROVED SEDIMENT TRAPPING DEVICE.
9. PERIODIC INSPECTION AND NEEDED MAINTENANCE SHALL BE PROVIDED ACCORDING TO PERMIT REQUIREMENTS.

ADAPTED FROM DETAILS PROVIDED BY: NEW YORK STATE DEC
ORIGINALLY DEVELOPED BY USDA-NRCS
VERMONT DEPARTMENT OF ENVIRONMENTAL CONSERVATION

STABILIZED CONSTRUCTION ENTRANCE

NOTES:
REFER TO "THE VERMONT STANDARDS & SPECIFICATIONS FOR EROSION PREVENTION & SEDIMENT CONTROL -2006- " FROM THE VT AGENCY OF NATURAL RESOURCES FOR ADDITIONAL GUIDANCE.

THIS WORK SHALL BE PERFORMED IN ACCORDANCE WITH SECTION 653 FOR VEHICLE TRACKING PAD (PAY ITEM 653.35) OR AS SPECIFIED IN THE CONTRACT.

REVISIONS	
MARCH 24, 2008	WHF
JANUARY 13, 2009	WHF

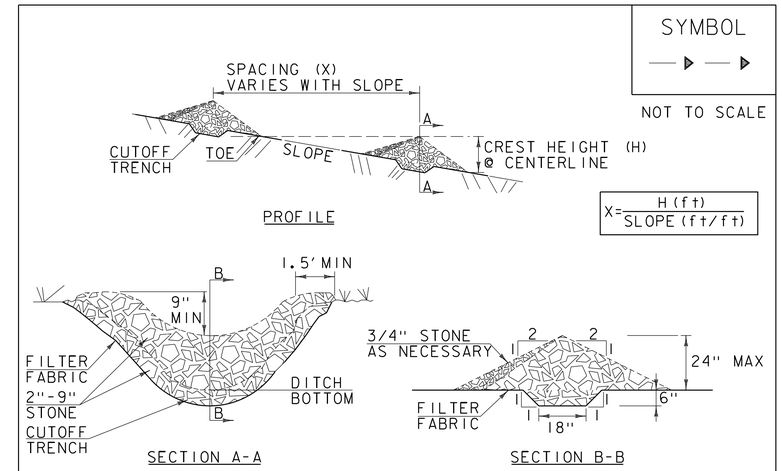

CONSTRUCTION SPECIFICATIONS

1. STONE WILL BE PLACED ON A FILTER FABRIC FOUNDATION.
2. CHECK DAMS SHALL BE SPACED SO THAT THE ELEVATION OF THE CREST OFTHE DOWNSTREAM DAM IS AT THE SAME ELEVATION AS THE TOE OF THE UPSTREAM DAM.
3. 3/4" FILTERING STONE MAY BE ADDED TO THE FACE OF THE CHECK DAM AS NECESSARY.
4. EXTEND THE STONE A MINIMUM OF 1.5' BEYOND THE DITCH BANKS TO PREVENT CUTTING AROUND THE DAM.
5. PROTECT CHANNEL DOWNSTREAM OF THE LOWEST CHECK DAM FROM SCOUR AND EROSION WITH STONE OR LINER AS APPROPRIATE.
6. ENSURE THAT CHANNEL APPURTENANCES SUCH AS CULVERT ENTRANCES BELOW CHECK DAMS ARE NOT SUBJECT TO DAMAGE OR BLOCKAGE FROM DISPLACED STONE.
7. MAXIMUM DRAINAGE AREA 2 ACRES.

ADAPTED FROM DETAILS PROVIDED BY: NEW YORK STATE DEC
ORIGINALLY DEVELOPED BY USDA-NRCS
VERMONT DEPARTMENT OF ENVIRONMENTAL CONSERVATION

CHECK DAM

NOTES:
REFER TO "THE VERMONT STANDARDS & SPECIFICATIONS FOR EROSION PREVENTION & SEDIMENT CONTROL -2006- " FROM THE VT AGENCY OF NATURAL RESOURCES FOR ADDITIONAL GUIDANCE.

THIS WORK SHALL BE PERFORMED IN ACCORDANCE WITH SECTION 653 FOR TEMPORARY STONE CHECK DAM, TYPE I (PAY ITEM 653.25)

REVISIONS	
MARCH 21, 2008	WHF
JANUARY 8, 2009	WHF

PROJECT NAME: CORINTH
PROJECT NUMBER: BRO 1447(29)

FILE NAME: ...\drawing\z01j292_typ.dgn
PROJECT LEADER: VTRANS
DESIGNED BY: VTRANS
EPSC DETAIL SHEET – ECD 1

PLOT DATE: 8/4/2014
DRAWN BY: VTRANS
CHECKED BY: VTRANS
SHEET 53 OF 57

8/4/2014 12:14:58 PM V:\1953\active\195307.95\transportation\drawing\z01j292_typ.dgn

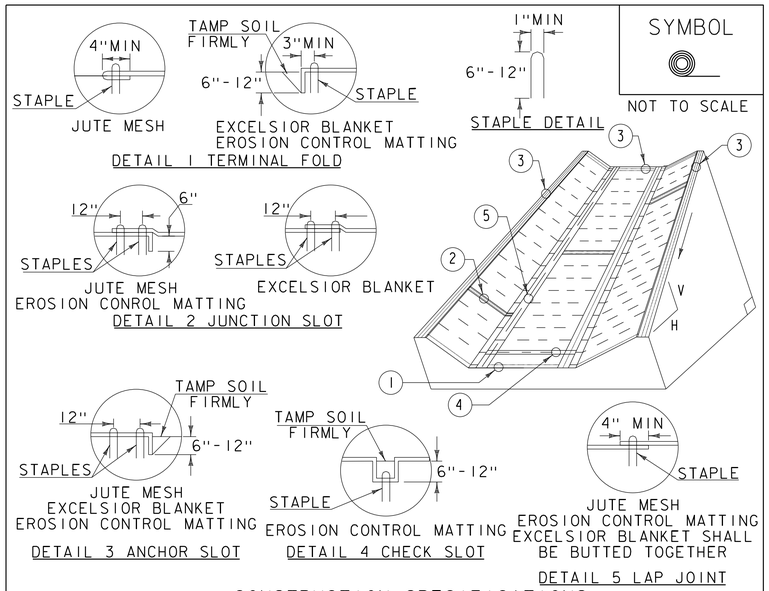

CONSTRUCTION SPECIFICATIONS

1. EROSION MATTING, CHECK SLOTS, SHALL BE SPACED IN DITCH CHANNEL SO THAT ONE OCCURS WITHIN EACH 50' ON SLOPES OF MORE THAN 4% AND LESS THAN 6%. ON SLOPES OF 6% OR MORE, THEY SHALL BE SPACED SO THAT ONE OCCURS WITHIN EACH 25'.
2. APPLY FERTILIZER, LIME SEED PRIOR TO PLACING MATTING.
3. STAPLES ARE TO BE PLACED ALTERNATELY, IN COLUMNS APPROXIMATELY 2' APART AND IN ROWS APPROXIMATELY 3' APART. APPROXIMATELY 175 STAPLES ARE REQUIRED PER 4'X225' ROLL OF MATERIAL AND 125 STAPLES ARE REQUIRED PER 4'X150' ROLL OF MATERIAL.
4. DISTURBED AREAS SHALL BE SMOOTHLY GRADED. EROSION CONTROL MATERIAL SHALL BE PLACED LOOSELY OVER GROUND SURFACE. DO NOT STRETCH.
5. ALL TERMINAL ENDS AND TRANSVERSE LAPS SHALL BE STAPLED AT APPROXIMATELY 12" INTERVALS.

ADAPTED FROM DETAILS PROVIDED BY: NEW YORK STATE DEC
ORIGINALLY DEVELOPED BY USDA-NRCS
VERMONT DEPARTMENT OF ENVIRONMENTAL CONSERVATION

ROLLED EROSION CONTROL PRODUCT (RECP) DITCH

NOTES:
REFER TO "THE VERMONT STANDARDS & SPECIFICATIONS FOR EROSION PREVENTION & SEDIMENT CONTROL -2006- " FROM THE VT AGENCY OF NATURAL RESOURCES FOR ADDITIONAL GUIDANCE.
THIS WORK SHALL BE PERFORMED IN ACCORDANCE WITH SECTION 653 AND AS SHOWN IN THE PLANS FOR TEMPORARY EROSION MATTING (PAY ITEM 653.20) OR PERMANENT EROSION MATTING (PAY ITEM 653.21).

REVISIONS	
MARCH 8, 2007	JMF
APRIL 16, 2007	WHF
JANUARY 13, 2009	WHF

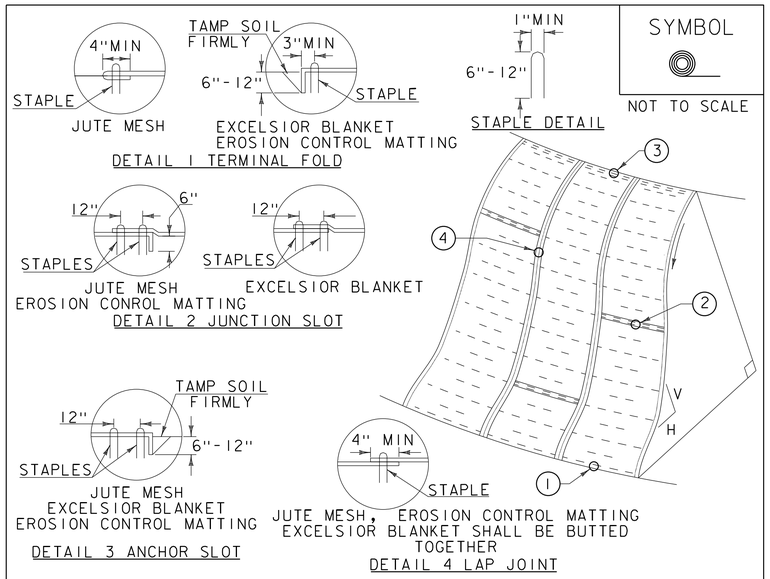

CONSTRUCTION SPECIFICATIONS

1. APPLY TO SLOPES GREATER THAN 3H:1V OR WHERE NECESSARY TO AID IN ESTABLISHING VEGETATION.
2. APPLY FERTILIZER, LIME SEED PRIOR TO PLACING MATTING.
3. STAPLES ARE TO BE PLACED ALTERNATELY, IN COLUMNS APPROXIMATELY 2' APART AND IN ROWS APPROXIMATELY 3' APART. APPROXIMATELY 175 STAPLES ARE REQUIRED PER 4'X225' ROLL OF MATERIAL AND 125 STAPLES ARE REQUIRED PER 4'X150' ROLL OF MATERIAL.
4. DISTURBED AREAS SHALL BE SMOOTHLY GRADED. EROSION CONTROL MATERIAL SHALL BE PLACED LOOSELY OVER GROUND SURFACE. DO NOT STRETCH.
5. ALL TERMINAL ENDS AND TRANSVERSE LAPS SHALL BE STAPLED AT APPROXIMATELY 12" INTERVALS.

ADAPTED FROM DETAILS PROVIDED BY: NEW YORK STATE DEC
ORIGINALLY DEVELOPED BY USDA-NRCS
VERMONT DEPARTMENT OF ENVIRONMENTAL CONSERVATION

ROLLED EROSION CONTROL PRODUCT (RECP) SIDE SLOPE

NOTES:
REFER TO "THE VERMONT STANDARDS & SPECIFICATIONS FOR EROSION PREVENTION & SEDIMENT CONTROL -2006- " FROM THE VT AGENCY OF NATURAL RESOURCES FOR ADDITIONAL GUIDANCE.
THIS WORK SHALL BE PERFORMED IN ACCORDANCE WITH SECTION 653 AND AS SHOWN IN THE PLANS FOR TEMPORARY EROSION MATTING (PAY ITEM 653.20) OR PERMANENT EROSION MATTING (PAY ITEM 653.21).

REVISIONS	
APRIL 16, 2007	JMF
JANUARY 13, 2009	WHF

VAOT RURAL AREA MIX

	LBS/AC				
% WEIGHT	BROADCAST	HYDROSEED	NAME	GERM %	PURITY %
37.5%	22.5	45	CREEPING RED FESCUE	85%	98%
37.5%	22.5	45	TALL FESCUE	90%	95%
5.0%	3	6	RED TOP	90%	95%
15.0%	9	18	BIRDSFOOT TREFOIL	85%	98%
5.0%	3	6	ANNUAL RYE GRASS	85%	95%
100%	60	120			

VAOT URBAN AREA MIX

	LBS/AC				
% WEIGHT	BROADCAST	HYDROSEED	NAME	GERM %	PURITY %
42.5%	34	68	CREEPING RED FESCUE	85%	98%
10.0%	8	16	PERENNIAL RYE GRASS	90%	95%
42.5%	34	68	KENTUCKY BLUE GRASS	85%	85%
5.0%	4	8	ANNUAL RYE GRASS	85%	95%
100%	80	160			

SOIL AMENDMENT GUIDANCE

FERTILIZER		LIME	
BROADCAST	HYDROSEED	BROADCAST	HYDROSEED
10-20-10	*FOLLOW*	PELLETIZED	*FOLLOW*
500 LBS/AC	*MANUFACTURER*	2 TONS/AC	*MANUFACTURER*

CONSTRUCTION GUIDANCE

1. RURAL SEED MIX: USE AS INDICATED IN THE PLANS AND/OR FOR ALL ESTABLISHED UPLAND (NON WETLAND) AREAS DISTURBED BY THE CONTRACTOR.
2. URBAN SEED MIX: USE AS INDICATED IN THE PLANS AND/OR FOR ALL ESTABLISHED LAWN AREAS DISTURBED BY THE CONTRACTOR.
3. ALL SEED MIXTURES: SHALL NOT HAVE A WEED CONTENT EXCEEDING 0.40% BY WEIGHT AND SHALL BE FREE OF ALL NOXIOUS SEED.
4. FERTILIZER AND LIMESTONE: SHALL FOLLOW RATES SHOWN ON PLAN OR AS DIRECTED BY THE ENGINEER
5. HAY MULCH: TO BE PLACED ON EARTH SLOPES AT THE RATE OF 2 TONS/ACRE, ACHIEVE 90% GROUND COVER OR AS DIRECTED BY THE ENGINEER.
6. TOPSOIL: TO BE USED WITH SEED AS INDICATED ON THE PLANS, OR AS DIRECTED BY THE ENGINEER.
7. HYDROSEEDING: ALTHOUGH GUIDANCE IS GIVEN ABOVE THE SITE CONDITIONS AND THE TYPE OF HYDROSEED WILL ULTIMATELY DICTATE THE AMOUNTS AND TYPES OF SOIL AMENDMENTS TO BE APPLIED
8. TURF ESTABLISHMENT: PLACING SEED, FERTILIZER, LIME AND MULCH PRIOR TO SEPTEMBER 15 AND AFTER APRIL 15 CAN BETTER ENSURE A VIGOROUS GROWTH OF GRASS.

ADAPTED FROM VTRANS TECHNICAL LANDSCAPE MANUAL FOR ROADWAYS AND TRANSPORTATION FACILITIES

TURF ESTABLISHMENT

REVISIONS	
JUNE 23, 2009	WHF
JANUARY 15, 2010	WHF
FEBRUARY 16, 2011	WHF

PROJECT NAME: CORINTH
PROJECT NUMBER: BRO 1447(29)

FILE NAME: ...\drawing\z01j292_typ.dgn
PROJECT LEADER: VTRANS
DESIGNED BY: VTRANS
EPSC DETAIL SHEET - ECD 2

PLOT DATE: 8/4/2014
DRAWN BY: VTRANS
CHECKED BY: VTRANS
SHEET 54 OF 57

8/4/2014 12:14:58 PM V:\1953\active\19530795\transportation\drawing\z01j292_typ.dgn

SYMBOL

NOT TO SCALE

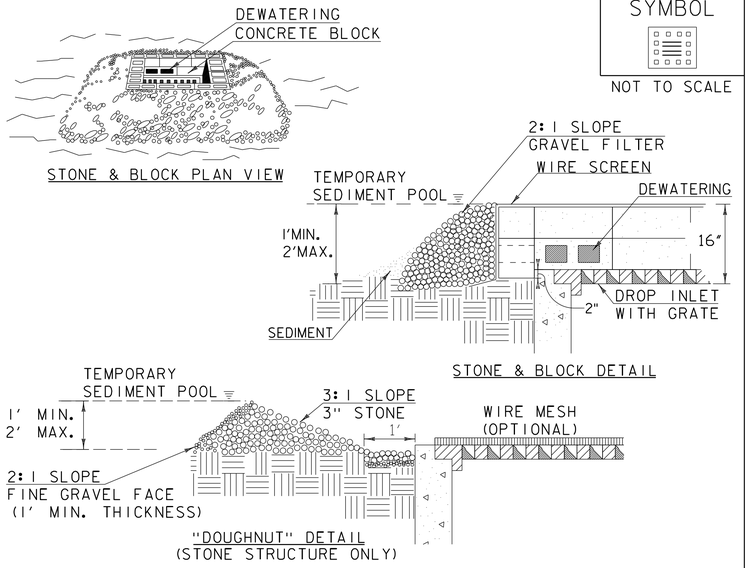

CONSTRUCTION SPECIFICATIONS

1. LAY ONE BLOCK ON EACH SIDE OF THE STRUCTURE ON ITS SIDE FOR DEWATERING. FOUNDATION SHALL BE 2" MINIMUM BELOW REST OF INLET AND BLOCKS SHALL BE PLACED AGAINST INLET FOR SUPPORT.
2. HARDWARE CLOTH OR ½" WIRE MESH SHALL BE PLACED OVER BLOCK OPENINGS TO SUPPORT STONE.
3. USE CLEAN STONE OR GRAVEL ½"- ¾" IN DIAMETER PLACED 2" BELOW TOP OF THE BLOCK ON A 2:1 SLOPE OR FLATTER.
4. FOR STONE STRUCTURES ONLY, A 1' THICK LAYER OF THE FILTER STONE WILL BE PLACED AGAINST THE 3" STONE AS SHOWN ON THE DRAWINGS.
5. MAXIMUM DRAINAGE AREA 1 ACRE

ADAPTED FROM DETAILS PROVIDED BY: NEW YORK STATE DEC
ORIGINALLY DEVELOPED BY USDA-NRCS
VERMONT DEPARTMENT OF ENVIRONMENTAL CONSERVATION

STONE & BLOCK DROP INLET PROTECTION

NOTES:
REFER TO "THE VERMONT STANDARDS & SPECIFICATIONS FOR EROSION PREVENTION & SEDIMENT CONTROL -2006- " FROM THE VT AGENCY OF NATURAL RESOURCES FOR ADDITIONAL GUIDANCE.

THIS WORK SHALL BE PERFORMED IN ACCORDANCE WITH SECTION 653 FOR INLET PROTECTION DEVICE, TYPE I(PAY ITEM 653.40).

REVISIONS	
MARCH 6, 2008	WHF
JANUARY 13, 2009	WHF

SYMBOL

NOT TO SCALE

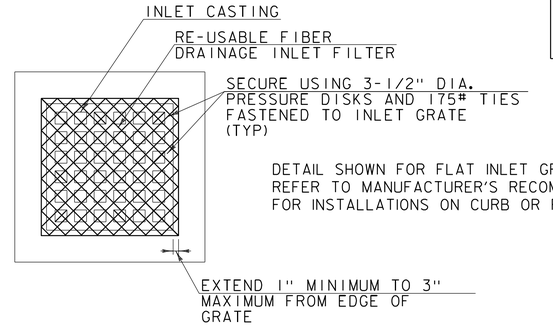

DETAIL SHOWN FOR FLAT INLET GRATES ONLY.
REFER TO MANUFACTURER'S RECOMMENDATIONS
FOR INSTALLATIONS ON CURB OR ROUND INLETS.

CONSTRUCTION SPECIFICATIONS

1. FILTERS SHALL RETAIN ALL CONSTRUCTION DEBRIS AND SHALL RETAIN OR OTHERWISE CONTROL MOST OF THE SEDIMENT PRODUCED BY CONSTRUCTION OPERATIONS.
2. IF CLOGGING OCCURS, INLETS SHALL BE ABLE TO BE EASILY UNCLOGGED BY BROOMING THE SIDES AND TOP OF THE FILTER.
3. INSTALLED FILTERS SHALL BE RESISTANT TO TRAFFIC DAMAGE, INCLUDING TRAFFIC BY STREET CLEANING MACHINES.
4. FILTER UNITS SHALL BE BIODEGRADABLE AND MAY OFTEN BE RE-USED.
5. INSTALL FILTER UNIT IN ACCORDANCE WITH MANUFACTURER'S RECOMMENDATIONS.
6. MINIMUM NUMBER OF ANCHORS PER FILTER UNIT: 7 FOR CURB INLETS, 8 FOR FLAT GRATES.
7. INSPECT ALL INSTALLED FILTER UNITS AFTER EVERY RAIN.
8. INSPECT ALL INSTALLED FILTER UNITS PRIOR TO INITIATING CONSTRUCTION ACTIVITIES FOR THE DAY IF RAIN PERSISTS OVERNIGHT.
9. IF, UPON VISUAL INSPECTION, 50% OR MORE OF FILTER FABRIC SURFACE AREA IS INUNDATED WITH SEDIMENT OR FILTER FABRIC IS CLOGGED, CONTRACTOR SHALL BROOM COLLECTED MATERIAL OFF FILTER UNIT SURFACES AND AWAY FROM EDGES.
10. REMOVE SEDIMENT AND DEBRIS COLLECTED AROUND FILTER UNITS. DISPOSE OF COLLECTED SEDIMENT AND DEBRIS OFF-SITE IN ACCORDANCE WITH THE VERMONT AGENCY OF NATURAL RESOURCES, SOLID WASTE MANAGEMENT RULES.

ORIGINALLY DEVELOPED BY STANTEC

INLET PROTECTION DEVICE, FILTER FIBER

NOTES:
THIS WORK SHALL BE PERFORMED IN ACCORDANCE WITH SECTION 900 FOR PAY ITEM 900.620 SPECIAL PROVISION (INLET PROTECTION DEVICE, FILTER FIBER).

PROJECT NAME: CORINTH
PROJECT NUMBER: BRO 1447(29)

FILE NAME: ...\drawing\z01j292_typ.dgn
PROJECT LEADER: VTRANS
DESIGNED BY: VTRANS
EPSC DETAIL SHEET – ECD 3

PLOT DATE: 8/4/2014
DRAWN BY: VTRANS
CHECKED BY: VTRANS
SHEET 55 OF 57

8/4/2014 12:15:01 PM V:\1953\active\195310795\transportation\drawing\z01j292_typ.dgn

STATE OF VERMONT
AGENCY OF TRANSPORTATION

RIGHT - OF - WAY DETAIL SHEET

TABLE OF PROPERTY ACQUISITION

PARCEL NO.	PROPERTY OWNER	ROW LAYOUT NO.	BEGINNING STATION	ENDING STATION	TAKE AREA±	REMAINDER AREA±	RIGHT TYPE	RIGHT T / P	RIGHT AREA ±	RECORDING DATA TITLE	RECORDING DATA DATE	RECORDING DATA TOWN / CITY	RECORDING DATA BOOK	RECORDING DATA PAGE	REMARKS
1	WILSON, CHRISTINE	1	101+26 LT	102+00 LT			SLOPE	T	35 SF						
			101+41.42 LT	102+36.08 LT			HWY	P	1,095 SF						
			100+76 LT	102+28 LT			CONST	T	1,010 SF						INCL. PDF & EC
2	LYDEM, WAYNE J. & MARGARET T.	1	102+28.11 LT	102+92.59 LT			HWY	P	450 SF						
			102+26 LT	102+89 LT			CONST	T	152 SF						INCL. EC, PDF & TEMP. CHECK DAM
			102+50 LT	102+58 LT			SLOPE	T	3 SF						
			102+88 LT	103+29 LT			REMOVE	T							FENCE
3	PARKER, LAURA A. & LEVY, ERIC J.	1	100+73 RT	101+24 RT			CONST	T	200 SF						INCL. EC & PDF
			101+67 RT	102+73 RT			DETOUR	T	2,075 SF						INCL. EC, PDF, TEMP. BRIDGE & TEMP. TRAFFIC BARRIER
			101+73 RT	101+86 RT			DRIVE	T	235 SF						
4	POLLI, SARAH;	1	102+58 RT	104+29 RT			DETOUR	T	4,490 SF						INCL. EC, PDF, TEMP. BRIDGE, TEMP TRAFFIC BARRIER &
	BARTON, JUDITH;														TEMP. CHECK DAM
	WILLIAMS, J. LARRY		103+26 RT	103+68 RT			SLOPE	T	300 SF						
			104+13 RT												MONITOR WELL W-1
5	GREEN MOUNTAIN POWER CORPORATION	1													UTILITY
6	TOPSHAM TELEPHONE COMPANY, INC.	1													UTILITY

TABLE OF REVISIONS

REVISION NO.	ROW SET SHEET #	DESCRIPTION	DATE
1	3, 4	PARCEL 2, LYDEM - ADD REMOVE (T)	11/21/13
		FOR FENCE.	
		COMPL. BY: MT CO 9845 APPR BY: RC	

APPROVED: RYAN CLOUTIER DATE: 10-29-13
CHIEF, PLANS & TITLES

PROJECT NAME: **CORINTH**
PROJECT NUMBER: **BRO 1447(29)**

FILE NAME: **r01j292detail.xls**
PROJECT LEADER: **D. LANDRY**
DESIGNED BY: **R. WHITE**
R.O.W. DETAIL SHEET #1

PLOT DATE: 21-NOV-2013
DRAWN BY: **M. TROTTIER**
CHECKED BY: **A. EGIZI**
SHEET 56 OF 57

ITEM 621.725 - GUARDRAIL APPROACH SECTION, GALVANIZED 3 RAIL BOX BEAM

STA. 101+52.9 - 101+97.5, LT.
STA. 101+88.4 - 102+11.4, RT.
STA. 102+62.5 - 102+97.7, LT.
STA. 102+76.4 - 103+11.0, RT.

ITEM 621.30 - BOX BEAM GUARDRAIL

STA. 100+89.7 - 101+52.9, LT.
STA. 102+97.7 - 103+51.0, LT.

ITEM 616.21 - VERTICAL GRANITE CURB

STA. 100+90.0 - 102+04.4, LT.
STA. 102+69.5 - 102+98.8, LT.

DRIVES

STA. 101+87.6, RT. (GRAVEL)

ITEM 201.15 - REMOVING MEDIUM TREES

STA. 101+41.6, LT.

ITEM 620.55 - REMOVAL OF EXISTING FENCE

STA. 102+88.5 - 103+28.8, LT.

ITEM 621.80 - REMOVAL AND DISPOSAL OF GUARDRAIL

STA. 101+99.6 - 102+21.4, LT.
STA. 102+11.3 - 102+25.6, RT.
STA. 102+62.1 - 102+81.0, LT.
STA. 102+66.1 - 102+93.8, RT.

(100) STA. 101+67 RT TO STA. 102+23 RT
NEW 18" X 64', PIPE OPTION 1
WITH DI @ INLET AND ES @ OUTLET

(101) STA. 101+56 LT TO STA. 101+67 RT
NEW 18" X 28', PIPE OPTION 1
WITH DI @ INLET AND ES @ OUTLET

(102) STA. 100+90 RT TO STA. 101+67 RT
NEW 18" X 80', PIPE OPTION 1
WITH DI @ INLET AND ES @ OUTLET

PIPE OPTION 1 = PCCSP, CAAP, RCP OR CPEP(SL)

CHICKEN FARM ROAD (T.H. 16) CURVE DATA

CURVE (1)	CURVE (2)
Δ = 48°45'20"	Δ = 7°11'44"
D = 76°23'40"	D = 7°38'22"
R = 75.00'	R = 750.00'
T = 33.99'	T = 47.16'
L = 63.82'	L = 94.19'
E = 7.34'	E = 1.48'

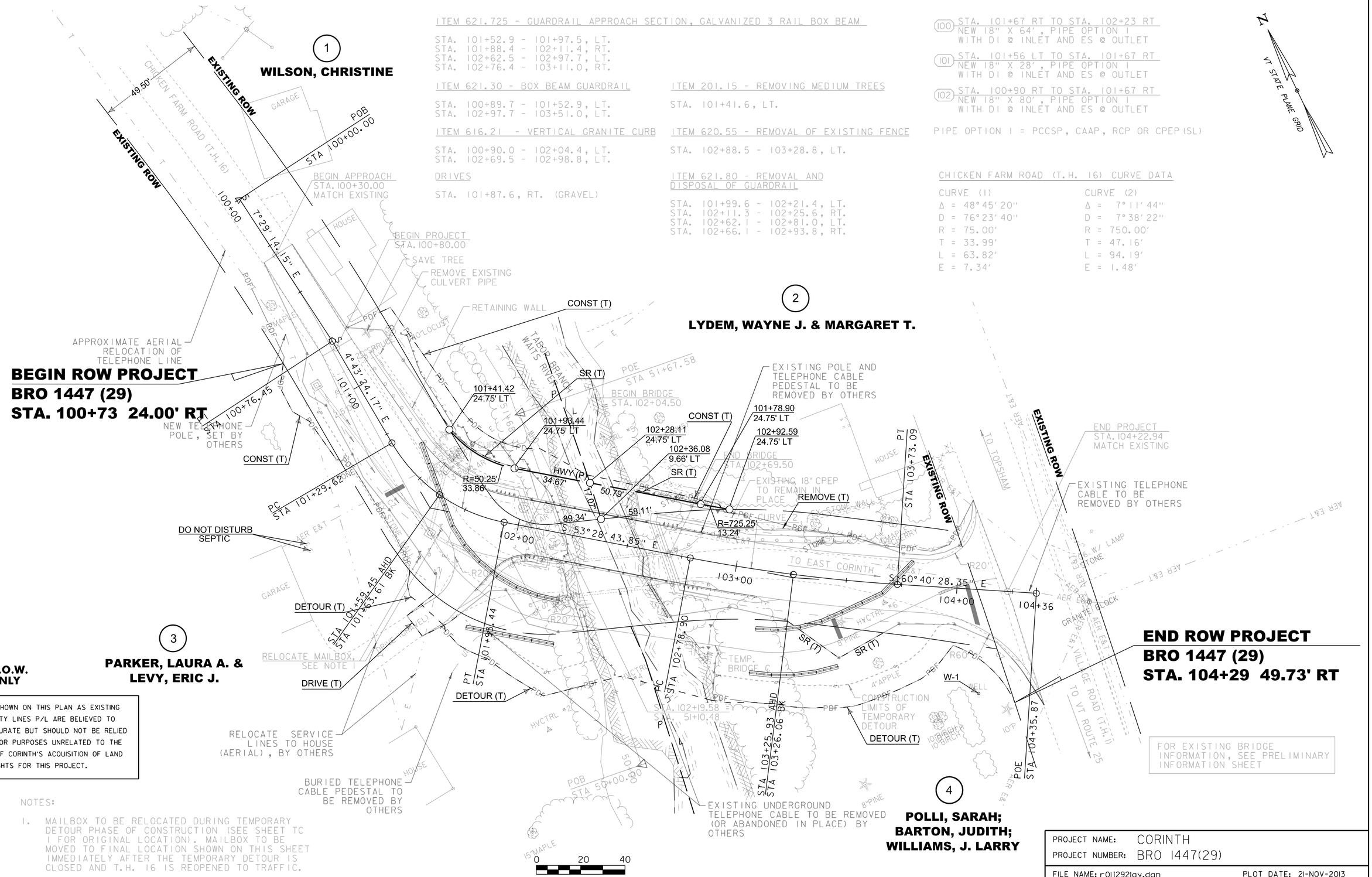

FOR R.O.W. USE ONLY

LINES SHOWN ON THIS PLAN AS EXISTING PROPERTY LINES P/L ARE BELIEVED TO BE ACCURATE BUT SHOULD NOT BE RELIED UPON FOR PURPOSES UNRELATED TO THE TOWN OF CORINTH'S ACQUISITION OF LAND AND RIGHTS FOR THIS PROJECT.

NOTES:

1. MAILBOX TO BE RELOCATED DURING TEMPORARY DETOUR PHASE OF CONSTRUCTION (SEE SHEET TC 1 FOR ORIGINAL LOCATION). MAILBOX TO BE MOVED TO FINAL LOCATION SHOWN ON THIS SHEET IMMEDIATELY AFTER THE TEMPORARY DETOUR IS CLOSED AND T.H. 16 IS REOPENED TO TRAFFIC.

PROJECT NAME: CORINTH	
PROJECT NUMBER: BRO 1447(29)	
FILE NAME: r01j292lay.dgn	PLOT DATE: 21-NOV-2013
PROJECT LEADER: D. LANDRY	DRAWN BY: A. EGIZI
DESIGNED BY: STANTEC	CHECKED BY: R. CLOUTIER
ROW LAYOUT SHEET 1 OF 1	SHEET 57 OF 57

CONCRETE GENERAL NOTES

1. ALL EXPOSED EDGES OF CONCRETE SHALL BE CHAMFERED 1" x 1"
2. REINFORCING STEEL SIZE AND SPACING SHOWN IN THE PLANS IS BASED ON 60 KSI STEEL, UNLESS NOTED OTHERWISE. WITH THE ENGINEER'S PERMISSION, BAR SIZE AND SPACING MAY BE MODIFIED ACCORDING TO THE LATEST AASHTO LRFD BRIDGE DESIGN SPECIFICATION AND STRUCTURES DESIGN MANUAL WHEN USING HIGHER STRENGTH STEEL.

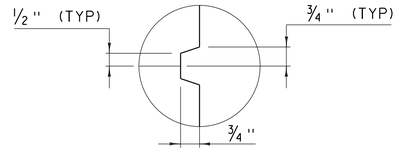

SCORE MARK DETAIL
(NOT TO SCALE)

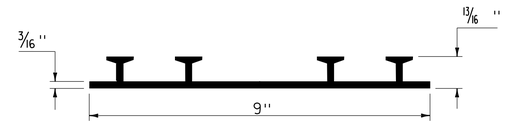

P.V.C. WATERSTOP FOR CONSTRUCTION JOINTS
(NOT TO SCALE)

PAYMENT FOR THE P.V.C. WATERSTOP SHALL BE INCIDENTAL TO THE UNIT BID PRICE FOR THE ADJACENT CONCRETE.

OTHER CONFIGURATIONS OF WATERSTOP MAY BE USED UPON APPROVAL OF THE ENGINEER.

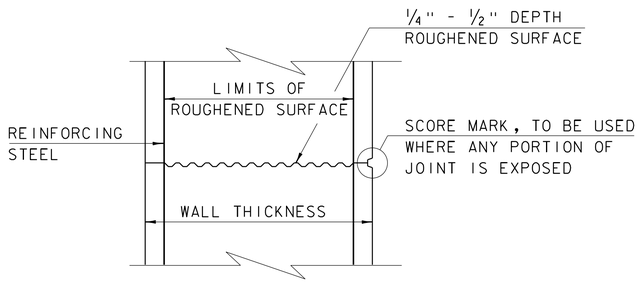

TYPICAL HORIZONTAL CONSTRUCTION JOINT
(NOT TO SCALE)

1. THE SURFACE OF THE CONCRETE CONSTRUCTION JOINTS SHALL BE CLEANED AND FREE OF LAITANCE.
2. IMMEDIATELY BEFORE NEW CONCRETE IS PLACED, ALL CONSTRUCTION JOINTS SHALL BE WETTED AND STANDING WATER REMOVED.

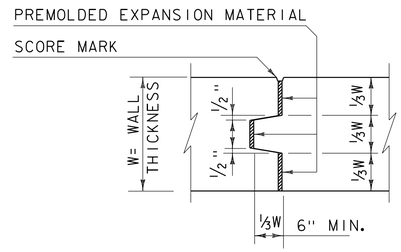

TYPICAL CONCRETE EXPANSION JOINT
(NOT TO SCALE)

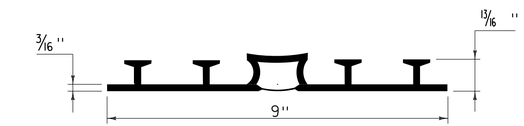

P.V.C. WATERSTOP FOR EXPANSION JOINTS
(NOT TO SCALE)

PAYMENT FOR THE P.V.C. WATERSTOP SHALL BE INCIDENTAL TO THE UNIT BID PRICE FOR THE ADJACENT CONCRETE.

OTHER CONFIGURATIONS OF WATERSTOP MAY BE USED UPON APPROVAL OF THE ENGINEER.

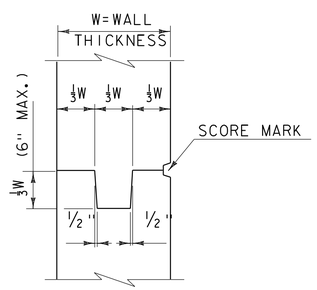

TYPICAL CONCRETE CONSTRUCTION JOINT
(NOT TO SCALE)

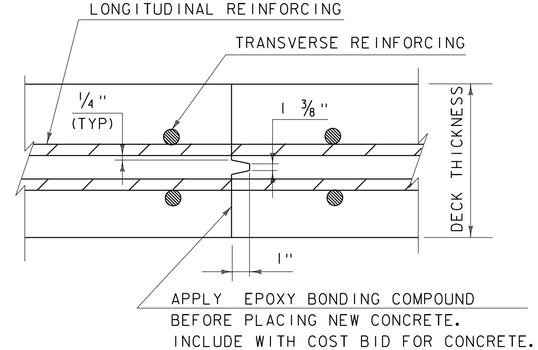

TRANSVERSE BRIDGE SLAB CONSTRUCTION JOINT DETAILS
(NOT TO SCALE)

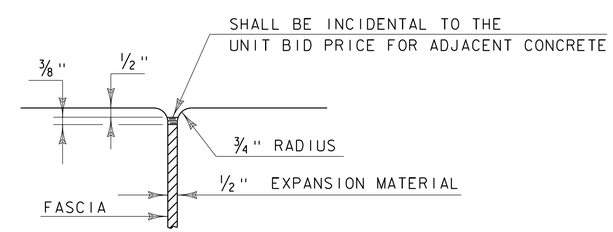

JOINT BETWEEN FASCIA AND WINGWALL
(NOT TO SCALE)

REVISIONS	
MAY 7, 2010	APPROVED FOR USE BY VAOT STRUCTURES SECTION
FEBRUARY 9, 2012	REBAR SUBSTITUTION ALLOWANCE ADDED TO CONCRETE GENERAL NOTES.

CONCRETE DETAILS AND NOTES

VERMONT AGENCY OF TRANSPORTATION
STRUCTURES SECTION

STRUCTURES DETAIL
SD-501.00

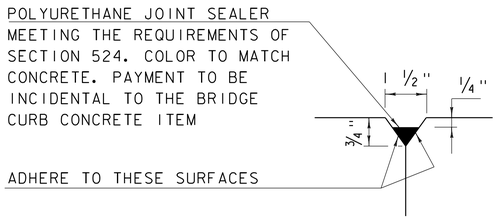

DETAIL "B"
(NOT TO SCALE)

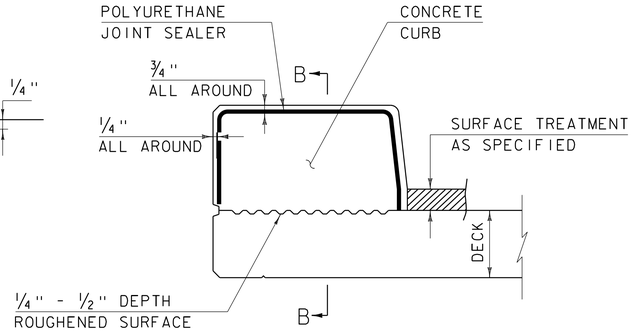

CONCRETE CURB JOINT SECTION
(NOT TO SCALE)

1. SEE TYPICAL HORIZONTAL CONSTRUCTION JOINT DETAIL FOR ADDITIONAL INFORMATION

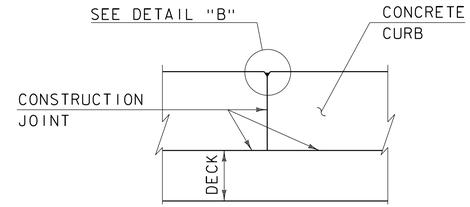

SECTION B - B
(NOT TO SCALE)

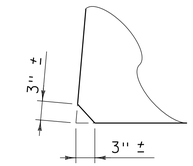

ACUTE ANGLE CLIP DETAIL
(NOT TO SCALE)

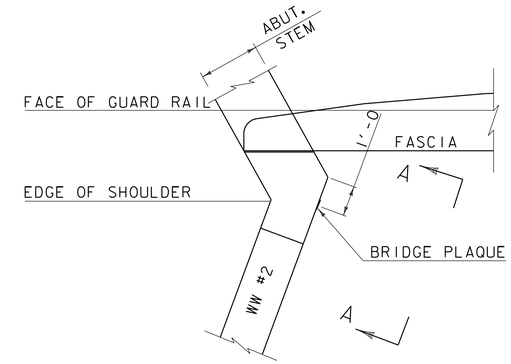

PLAN

CONCRETE CURB JOINT NOTES

1. CONCRETE CURBS MAY BE PLACED IN ONE CONTINUOUS OPERATION IF AN APPROVED SHRINKAGE REDUCING ADMIXTURE LISTED IN THE SPECIAL PROVISIONS IS USED WITH THE CONCRETE MIX DESIGN. PAYMENT FOR THE SHRINKAGE REDUCING ADMIXTURE WILL BE INCIDENTAL TO THE BRIDGE CURB CONCRETE ITEM.

2. IF THE CONTRACTOR CHOOSES NOT TO USE AN APPROVED SHRINKAGE REDUCING ADMIXTURE, THE CURBS SHALL BE CONSTRUCTED WITH CONSTRUCTION JOINTS SPACED AT A MAXIMUM OF 15'-0" CENTER TO CENTER AND 2'-0" MINIMUM FROM THE CENTER OF NEAREST BRIDGE RAILING POST.

3. ON MULTI-SPAN CONTINUOUS SUPERSTRUCTURES, REGARDLESS OF WHETHER APPROVED SHRINKAGE REDUCING ADMIXTURE IS USED, CURB JOINTS SHALL BE LOCATED OVER THE CENTERLINE OF PIERS AND 7'-0" EACH SIDE OF THE CENTERLINE OF EACH PIER.

4. WHEN CURB JOINTS ARE USED THE CURBS SHALL BE PLACED IN ALTERNATE SECTIONS WITH A MINIMUM OF 48 HOUR DELAY BETWEEN ADJACENT PLACEMENTS.

5. LONGITUDINAL REINFORCING SHALL BE CONTINUOUS THROUGH CURB CONSTRUCTION JOINTS. CURB STIRRUP BARS SHALL BE TURNED AS NECESSARY TO MAINTAIN COVER IN THE FLARED CURB ENDS.

6. THE JOINT SPACING AND DETAILS SHOWN SHALL APPLY TO SIDEWALKS WHEN SHOWN IN THE PLANS.

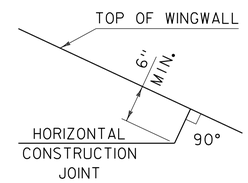

HORIZONTAL WINGWALL CONSTRUCTION JOINT
(NOT TO SCALE)

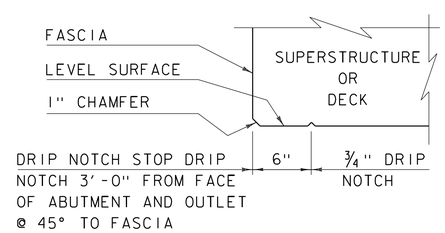

DRIP NOTCH DETAIL
(NOT TO SCALE)

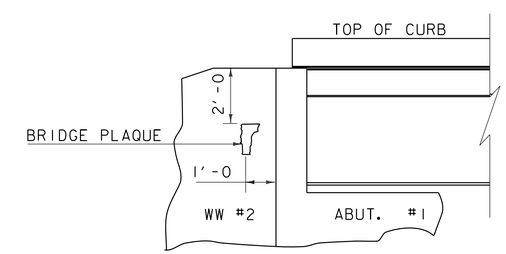

VIEW "A - A"

BRIDGE PLAQUE
(NOT TO SCALE)

THE BRIDGE PLAQUE WILL BE SUPPLIED BY THE AGENCY OF TRANSPORTATION AND SHALL BE INSTALLED BY THE CONTRACTOR AT ABUTMENT #1 ON THE RIGHT SIDE AS SHOWN OR AS DIRECTED BY THE ENGINEER.

PAYMENT FOR INSTALLATION OF THE BRIDGE PLAQUE SHALL BE INCIDENTAL TO THE ADJACENT CONCRETE.

REVISIONS

MAY 7, 2010	APPROVED FOR USE BY VAOT STRUCTURES SECTION
JUNE 4, 2010	MODIFIED AND ADDED TWO DETAILS
OCTOBER 10, 2012	MODIFIED HORZ. JOINT WINGWALL ADD 6" MIN. DIMENSION

CONCRETE DETAILS AND NOTES

VERMONT AGENCY OF TRANSPORTATION
STRUCTURES - SECTION

STRUCTURES DETAIL
SD-502.00

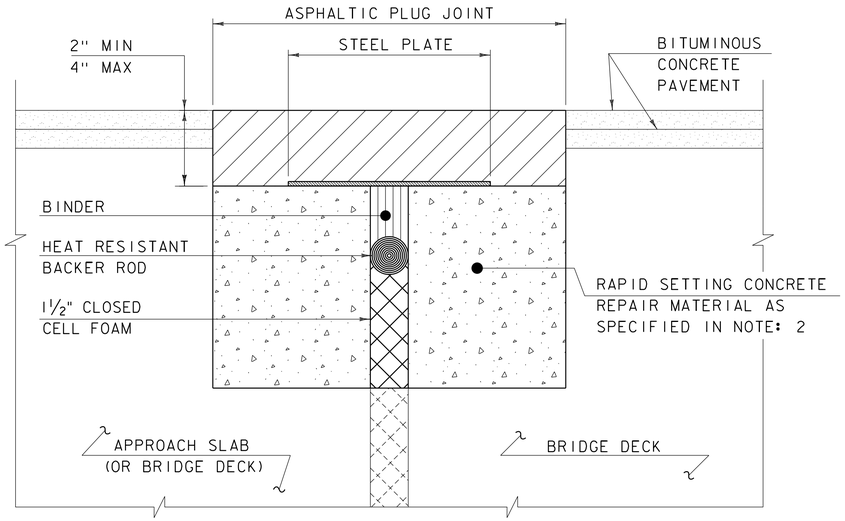

ASPHALTIC PLUG JOINT DETAIL - REHAB

NOTES:

1. THE CONTRACTOR SHALL REMOVE ALL ASPHALTIC PLUG JOINT MATERIAL AND DETERIORATED CONCRETE AS DIRECTED BY THE ENGINEER. REMOVAL OF THE FIRST 4 INCHES OF MATERIAL SHALL BE INCLUDED IN THE BID PRICE FOR ITEM 516.10 BRIDGE EXPANSION JOINT, ASPHALTIC PLUG. ANY REMOVAL OF MATERIAL GREATER THAN 4 INCHES SHALL BE INCLUDED IN THE BID PRICE OF ITEM 580.20 RAPID SETTING CONCRETE REPAIR MATERIAL WITH COARSE AGGREGATE.

2. THE CONTRACTOR SHALL REPLACE REMOVED MATERIAL THAT IS LESS THAN 4" FROM FINISHED GRADE WITH ASPHALTIC PLUG JOINT MATERIAL MEETING THE REQUIREMENTS OF SUBSECTION 707.15. ALL REMOVED MATERIAL THAT IS GREATER THAN 4 INCHES FROM FINISHED GRADE SHALL BE REPLACED WITH RAPID SETTING CONCRETE REPAIR MATERIAL WITH COARSE AGGREGATE MEETING THE REQUIREMENTS OF SUBSECTION 780.04.

3. REINFORCING STEEL NOT SHOWN FOR CLARITY.

4. PLACE 1/4" THICK BY 8" WIDE SECTIONS OF STEEL PLATE OVER THE CENTER OF THE MOVEMENT GAP. SECURE THE PLATES FROM MOVING BY INSERTING LOCATING PINS THROUGH THE PRE-STAMPED HOLES INTO BACKER ROD AND COVER WITH HOT BINDER. THE STEEL PLATES MAY BE OMITTED WHERE THE ENGINEER DETERMINES THAT THE APPROACH SLAB OR BRIDGE DECK WILL PROVIDE INADEQUATE SUPPORT AND WHERE VERTICAL MOVEMENT OF THE PLATES MIGHT OCCUR.

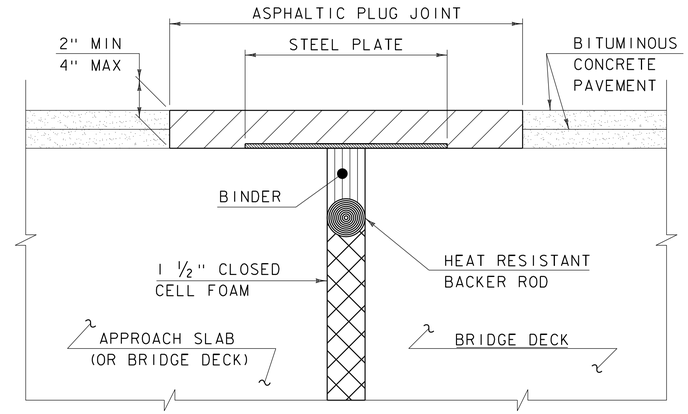

ASPHALTIC PLUG JOINT DETAIL "A" - NEW

NOTE:
PLACE 1/4" THICK BY 8" WIDE SECTIONS OF STEEL PLATE OVER THE CENTER OF THE MOVEMENT GAP. SECURE THE PLATES FROM MOVING BY INSERTING LOCATING PINS THROUGH THE PRE-STAMPED HOLES INTO BACKER ROD AND COVER WITH HOT BINDER.

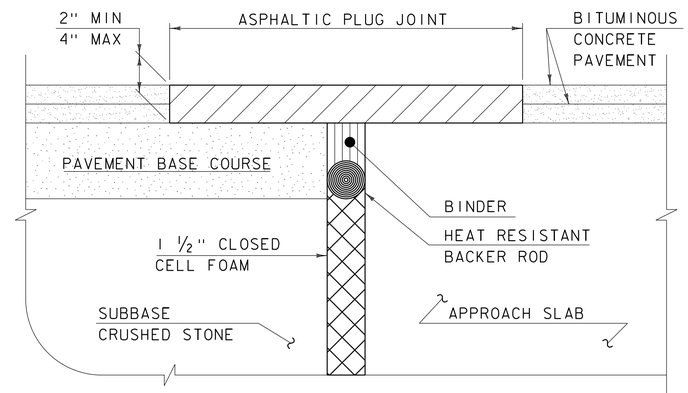

ASPHALTIC PLUG JOINT DETAIL "B" - NEW

ASPHALTIC PLUG JOINT NOTES

INSTALLATION:

1. LOCATE THE JOINT CENTRALLY OVER THE DECK OVERLAY EXPANSION GAP OR FIXED JOINT, MARKED OUT TO THE MANUFACTURER'S RECOMMENDED WIDTH.

2. REMOVE THE BITUMINOUS CONCRETE PAVEMENT FULL DEPTH AS SHOWN ON THE PLANS. THE PAVEMENT SHALL BE DRY AND SAW CUT TO THE LIMITS REQUIRED TO PLACE THE JOINT. A PNEUMATIC HAMMER AND CHISEL MAY BE USED ADJACENT TO THE CURB ONLY WHEN SAW CUTTING IS NOT POSSIBLE.

3. BLAST CLEAN THE JOINT AREA OF DEBRIS, ASPHALT AND SHEET MEMBRANE. THOROUGHLY DRY THE JOINT AREA WITH COMPRESSED AIR PRIOR TO APPLYING BINDER MATERIAL.

4. PLACE PROPERLY SIZED HEAT RESISTANT BACKER ROD IN THE MOVEMENT GAP ALLOWING FOR 1" +/- OF BINDER ABOVE THE ROD.

5. HEAT AND PLACE THE BINDER MATERIAL AS RECOMMENDED BY THE MANUFACTURER.

6. IMMEDIATELY AFTER TOP COATING, CAST AN ANTI-SKID MATERIAL OVER THE JOINT TO REDUCE THE RISK OF TRACKING.

WEATHER LIMITATIONS

APPLY BINDER MATERIAL ONLY WHEN THE FOLLOWING CONDITIONS PREVAIL OR AS RECOMMENDED BY THE MANUFACTURER:

1. THE AMBIENT AIR TEMPERATURE IS AT LEAST 10 DEG C (50 DEG F) AND RISING.

2. THE ROAD SURFACE IS DRY.

3. WEATHER CONDITIONS OR OTHER CONDITIONS ARE FAVORABLE AND ARE EXPECTED TO REMAIN SO FOR THE PERFORMANCE OF SATISFACTORY WORK.

DETAILS ON THIS SHEET ARE NOT TO SCALE.

REVISIONS	
MAY 7, 2010	APPROVED FOR USE BY VAOT STRUCTURES SECTION
AUGUST 29, 2011	ADD DETAIL "B" AND REV. NOTES

BRIDGE JOINT
ASPHALTIC PLUG

VERMONT AGENCY OF TRANSPORTATION
STRUCTURES - DIVISION

STRUCTURES DETAIL

SD-516.10

DETAIL A — RESIDENTIAL DRIVE

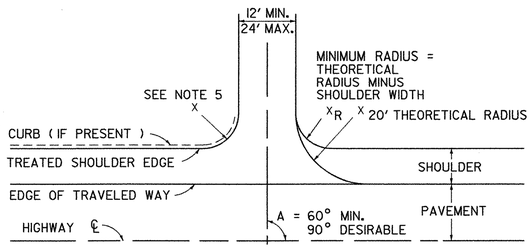

DETAIL B — DUAL COMMERCIAL DRIVE TO BE USED ONLY UNDER SPECIAL CONDITIONS

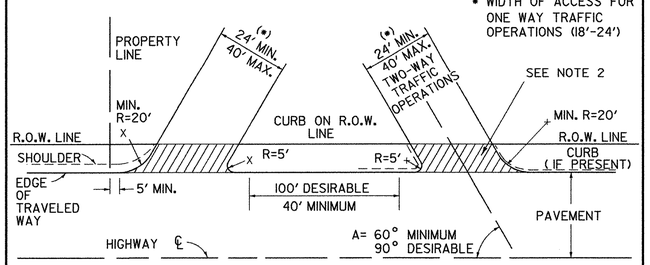

DETAIL C — TWO-WAY UNDIVIDED COMMERCIAL DRIVE FOR SINGLE STORES, BUSINESSES, SMALL HOUSING DEVELOPMENTS

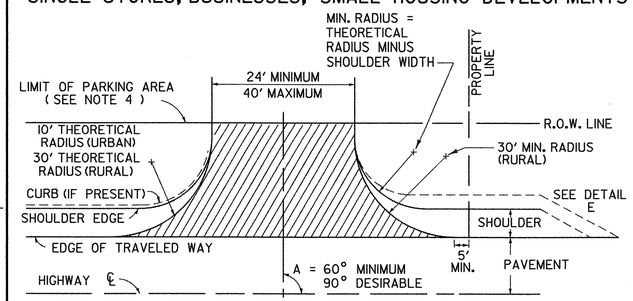

THIS DETAIL WILL ALSO APPLY TO COMMERCIAL SERVICE DRIVES, WHEN AUTHORIZED, HAVING A MAXIMUM WIDTH OF 20'. THE SERVICE DRIVE WILL HAVE A "SERVICE VEHICLES ONLY" SIGN PLACED AT THE HIGHWAY ROW LINE. SIGN SHALL BE 18"X 24" AS PRESCRIBED IN THE "STANDARD HIGHWAY SIGNS BOOK". A SUPPLEMENTAL PUBLICATION TO MUTCD.

DETAIL D — TWO-WAY COMMERCIAL DRIVE WITH DIVISIONAL ISLAND FOR SHOPPING CENTERS, LARGE HOUSING DEVELOPMENTS, INDUSTRIAL PLANTS AND SERVICE STATIONS

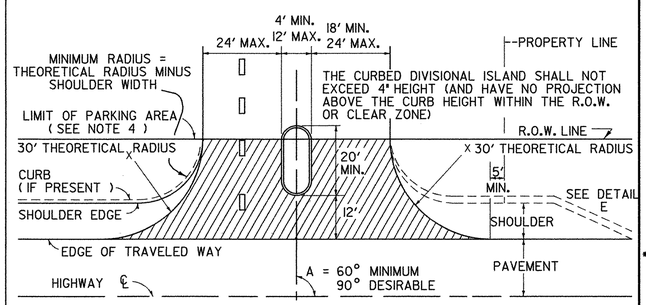

DETAIL E — RIGHT TURN LANE FOR COMMERCIAL DRIVE (UNSIGNALIZED INTERSECTIONS ONLY)

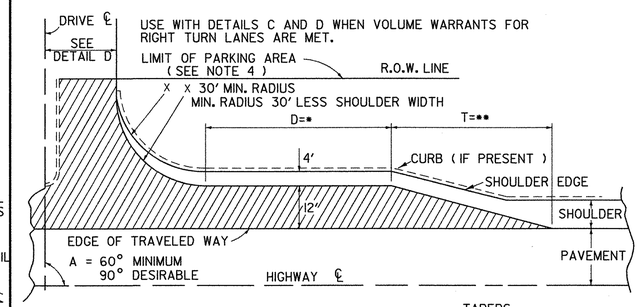

• STORAGE LENGTH IS VARIABLE DEPENDING ON TRAFFIC VOLUME AND MUST BE ADJUSTED TO PROVIDE PROPER DECELERATION LENGTH. REFER TO VAOT STANDARD E-192

TAPERS

SPEED (MPH)	30	35	40	50
••LENGTH (MIN)(FT)(T)	100	120	140	180
RATE	8:1	10:1	12:1	15:1

DETAIL F — MINIMUM HORIZONTAL SEPARATION BETWEEN DRIVEWAYS AND INTERSECTING SIDEROADS

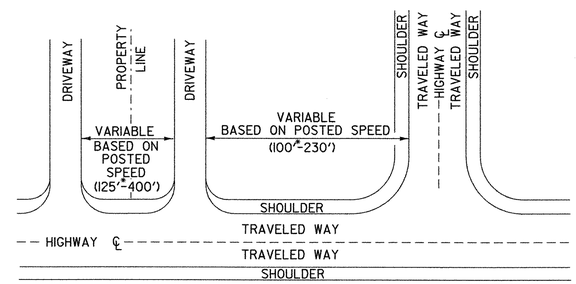

• MINIMUM UNLESS NO OTHER REASONABLE ACCESS IS AVAILABLE AND PRIOR APPROVAL IS GRANTED BY THE VAOT ITEMS SUCH AS TRAFFIC SIGNALS, HIGH TRAFFIC VOLUMES, OR FUNCTIONAL CLASS OF HIGHWAY SHOULD BE CONSIDERED WHEN DETERMINING APPROPRIATE SEPARATION DISTANCE. WHEN CURRENT RECOMMENDED SEPARATION DISTANCE CANNOT BE OBTAINED RESTRICTION OF TURNING MOVEMENTS MAY BE REQUIRED.

DETAIL G — PERSPECTIVE SKETCH OF DRIVE INTERSECTION SHOWING DEPRESSION

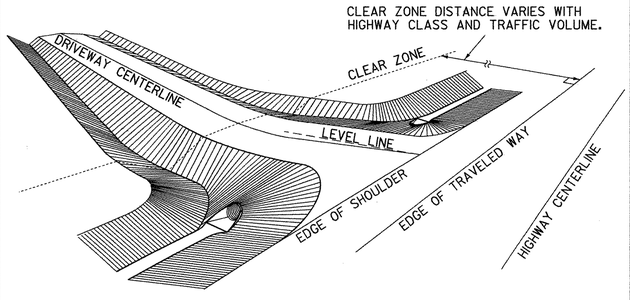

DETAIL H — PROFILE OF DRIVE INTERSECTION SHOWING 5" DEPRESSION (CUT SECTION)

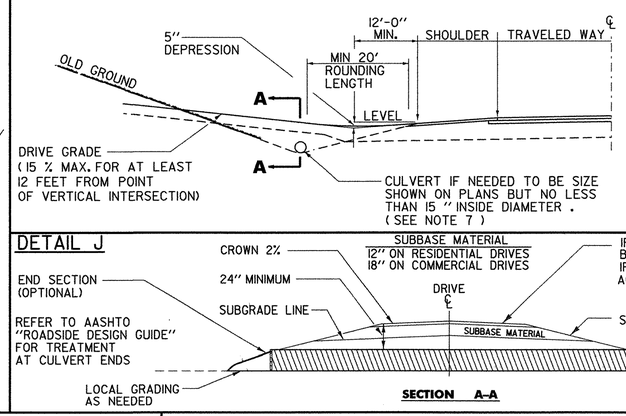

DETAIL I — PROFILE OF DRIVE INTERSECTION (FILL SECTION)

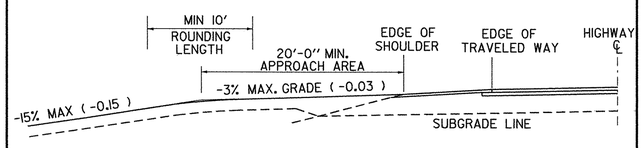

DETAIL J

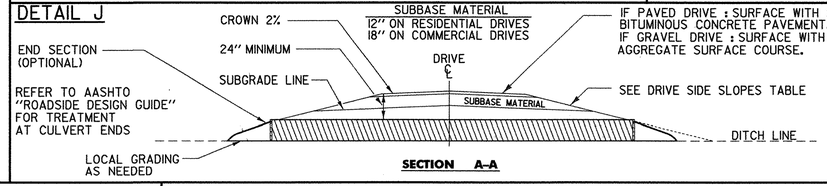

DRIVE SIDE SLOPES

LOCATION OF SLOPE	SLOPE RATE
V > 40 MPH	1:6 OR FLATTER
URBAN AREAS, OR V ≤ 40 MPH	1:4 DESIRABLE 1:2 ALLOWABLE
OUTSIDE CLEAR ZONE	1:2 OR FLATTER

NOTES:

1. THIS SHEET IS INTENDED FOR USE BY DESIGNERS ON HIGHWAY PROJECTS AND IN CONJUNCTION WITH A PERMIT FOR WORK WITHIN HIGHWAY RIGHTS OF WAY (FORM TA 210). ALL CONSTRUCTION REQUIRED BY THE PERMIT AND INDICATED ON THIS SHEET SHALL BE THE RESPONSIBILITY OF THE APPLICANT AND IS SUBJECT TO THE APPROVAL OF THE VT. AGENCY OF TRANSPORTATION. WHEN USED WITH THE PLANS FOR A HIGHWAY CONSTRUCTION PROJECT. THIS SHEET IS INTENDED TO BE A GUIDE FOR THE DESIGNER CONCERNING DRIVE WIDTHS, HORIZONTAL, VERTICAL AND GEOMETRIC CHARACTERISTICS.
2. ALL COMMERCIAL DRIVES SHALL BE PAVED FROM THE EDGE OF THE TRAVELED WAY TO THE HIGHWAY RIGHT-OF-WAY, TO THE FARTHEST POINT OF CURVATURE ON THE DRIVEWAY EDGE OR AS DIRECTED BY THE DISTRICT TRANSPORTATION ADMINISTRATOR. THIS PAVING IS INDICATED IN DETAILS (B THRU E) BY HATCHING.
3. DEPTH OF SUBBASE AND PAVEMENT TO BE THE SAME AS HIGHWAY OR AS SHOWN IN DETAIL J WITHIN THE LIMITS OF THE HIGHWAY RIGHT-OF-WAY.
4. VEHICULAR ACCESS FROM PARKING AREAS TO THE RIGHT-OF-WAY AT OTHER THAN APPROVED ACCESS POINTS WILL BE PREVENTED BY THE CONSTRUCTION OF CURBING OR OTHER SUITABLE PHYSICAL BARRIER.
5. IF CURB IS PRESENT, SEE APPROPRIATE CURB DETAIL STANDARD OR MATCH TOWN/CITY STANDARD CURB TREATMENT.
6. WHERE TRAFFIC VOLUME FOR A PROJECT IS SUBSTANTIAL THE AGENCY MAY REQUIRE SPECIAL LANES FOR TURNING, SIGNALS OR OTHER MODIFICATIONS. BASED ON TRAFFIC STUDIES THE AGENCY WILL DETERMINE SPECIFIC TREATMENT TO BE USED. ON DEVELOPER PROJECTS THE AGENCY WILL WORK WITH THE APPLICANT TO IMPLEMENT CHANGES TO THE STATE HIGHWAY.
7. CIRCULAR DRAINAGE CULVERTS UNDER DRIVES SHALL HAVE A MINIMUM INSIDE DIAMETER (I.D.) OF 15". PIPE ARCHES USED UNDER DRIVES SHALL HAVE A MINIMUM INSIDE CROSS-SECTIONAL AREA EQUIVALENT TO THAT PROVIDED BY A 15" CIRCULAR PIPE.
8. THE OFFSET BETWEEN THE PROPERTY LINE AND THE EDGE OF THE DRIVEWAY MAY BE GOVERNED BY LOCAL ZONING LAWS. DRIVEWAY WIDTH RESTRICTIONS SHOWN PERTAIN ONLY TO THE AREA WITHIN THE HIGHWAY R.O.W. OR THE END OF THE TURNING RADIUS WHICHEVER IS GREATEST.
9. DRIVEWAY GRADES STEEPER THAN THOSE SHOWN MAY BE ALLOWED AS LONG AS A 20' APPROACH AREA IS ACHIEVED FOR THE VEHICLE TO PAUSE BEFORE ENTERING THE HIGHWAY. (WHERE CURB & SIDEWALKS EXIST, SEE STANDARDS C-2A & C-2B)
10. INTERSECTION SIGHT DISTANCES, EQUAL TO OR GREATER THAN THOSE SHOWN BELOW, SHOULD BE PROVIDED IN BOTH DIRECTIONS FOR ALL DRIVES ENTERING ON PUBLIC HIGHWAYS, UNLESS OTHERWISE APPROVED BY THE AGENCY OF TRANSPORTATION. INTERSECTION SIGHT DISTANCE IS MEASURED FROM A POINT ON THE DRIVE AT LEAST 15 FEET FROM THE EDGE OF TRAVELED WAY OF THE ADJACENT ROADWAY AND MEASURED FROM A HEIGHT OF EYE OF 3.5 FEET ON THE DRIVE TO A HEIGHT OF 3.50 FEET ON THE ROADWAY.

SIGHT DISTANCE CHART

POSTED SPEED OR DESIGN SPEED (M.P.H.)	MINIMUM STOPPING SIGHT DISTANCE (FT)	MINIMUM INTERSECTION SIGHT DISTANCE • (FT)
25	155	280
30	200	335
35	250	390
40	305	445
45	360	500
50	425	555
55	495	610
60	570	665
65	645	720

THE ABOVE VALUES ARE TAKEN FROM THE 2004 AASHTO " A POLICY ON GEOMETRIC DESIGN OF HIGHWAYS & STREETS."

NOTE : ADVANCE WARNING SIGNS WILL BE REQUIRED IF OBTAINABLE INTERSECTION SIGHT DISTANCES ARE BELOW MINIMUM STOPPING SIGHT DISTANCES.

THE CHART IS ENTERED TO SELECT DESIGN VALUES BASED ON THE POSTED SPEED LIMIT IN MPH. VALUES FOR DESIGN ARE CALCULATED BASED ON THE DESIGN SPEED IN MPH.

• ASSUMES A GAP OF 7.5 SECONDS IN THE TRAFFIC STREAM ON THE HIGHWAY MAINLINE BASED ON THE HIGHWAY DESIGN SPEED IN MPH. THIS ALLOWS A STOPPED PASSENGER VEHICLE TO ENTER THE MAINLINE FROM THE DRIVE WITHOUT UNDULY INTERFERING WITH THE HIGHWAY OPERATIONS.

REVISIONS AND CORRECTIONS

DEC. 11, 1992 - THIS STANDARD SUPERCEDES B-71 (7/23/80R), B-71A (3/12/90), AND B-13 (12/14/71).
JUNE 1, 1994 - REISSUED, WITHOUT CHANGE, UNDER NEW SIGNATURES.
MAR. 10, 1995 - REISSUED, WITHOUT CHANGE, UNDER NEW SIGNATURES.
NOV. 16, 2000 - CHANGES MADE TO CONFORM WITH LANGUAGE AND DIMENSIONS IN ACCESS MANAGEMENT PROGRAM GUIDELINES.
FEB 1, 2004 - CHANGES MADE TO SIGHT DISTANCE CHART TO CONFORM WITH NEWEST AASHTO CRITERIA.
JULY 8, 2005 - CHANGE MADE TO OBJECT HEIGHT TO CONFORM WITH NEWEST AASHTO CRITERIA

APPROVED

DIRECTOR OF PROGRAM DEVELOPMENT

CHIEF OF UTILITIES AND PERMITS

FEDERAL HIGHWAY ADMINISTRATION

STANDARDS FOR RESIDENTIAL AND COMMERCIAL DRIVES

VERMONT AGENCY OF TRANSPORTATION

STANDARD B-71

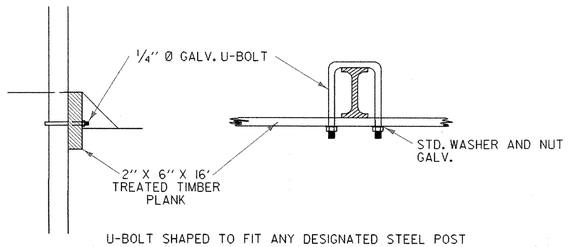

U-BOLT SHAPED TO FIT ANY DESIGNATED STEEL POST

WITH STEEL POSTS

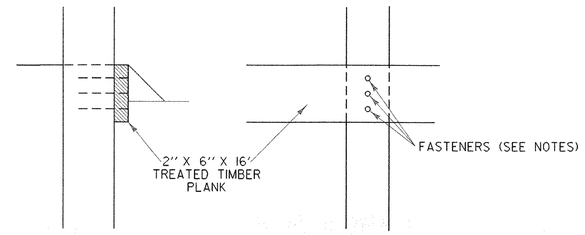

WITH WOOD POSTS (EXISTING CONDITION)

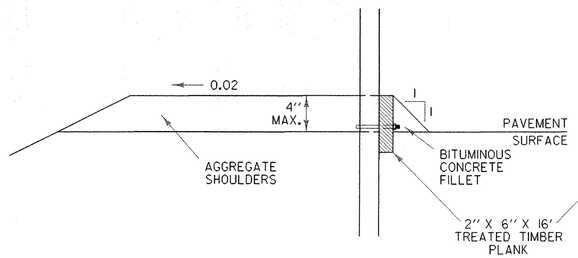

BITUMINOUS CONCRETE FILLET DETAIL

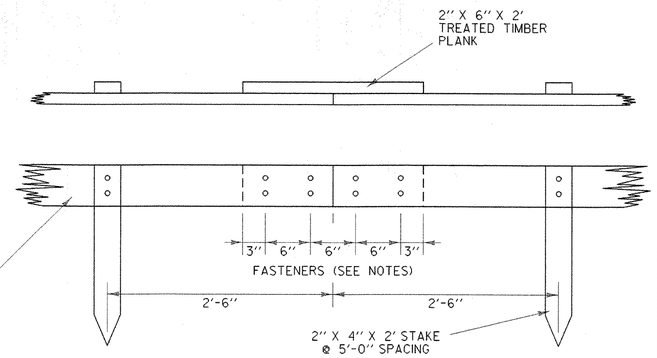

SPLICE DETAIL

TREATED TIMBER CURB

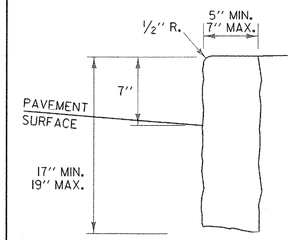

VERTICAL GRANITE CURB

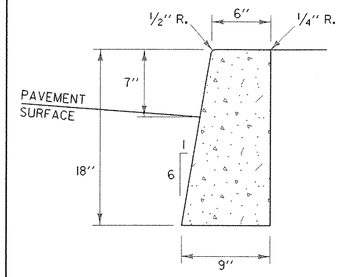

CAST IN PLACE CONCRETE CURB, TYPE B

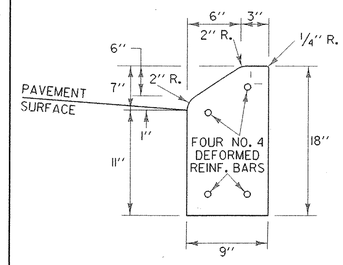

PRECAST REINFORCED CONCRETE CURB, TYPE A

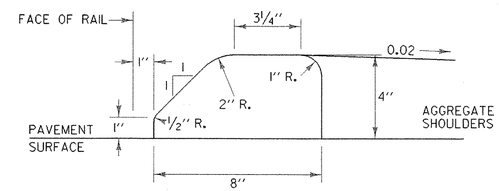

USE ONLY WITH STEEL BEAM GUARDRAIL

BITUMINOUS CONCRETE CURB, TYPE A

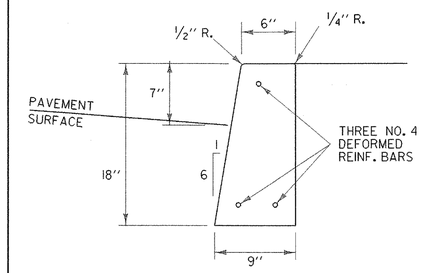

PRECAST REINFORCED CONCRETE CURB, TYPE B

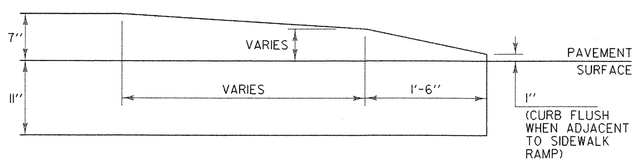

CONCRETE CURB END

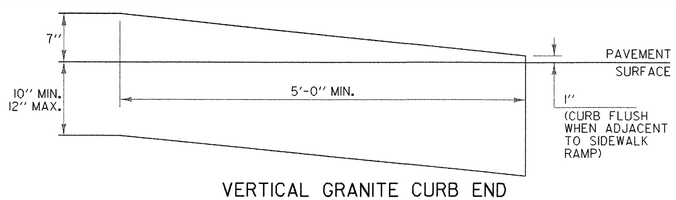

VERTICAL GRANITE CURB END

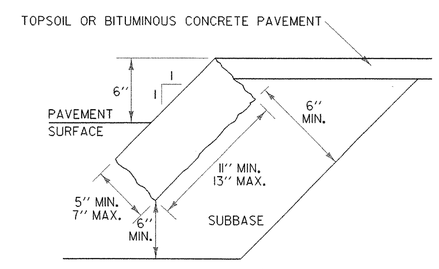

EDGING TO BE PLACED PRIOR TO PLACING TOP SURFACE COURSE.

GRANITE SLOPE EDGING

GENERAL NOTES:

1. HEIGHT OF REVEAL OF CURB SHALL NOT EXCEED FOUR INCHES WHERE DESIGN OR POSTED SPEED IS EQUAL TO OR GREATER THAN 40 MPH AND WHEN INSTALLED WITH GUARDRAIL (STANDARD SHAPE TO BE BURIED TO THIS DEPTH).
2. WHEN CONCRETE SIDEWALK IS CONSTRUCTED ADJACENT TO CONCRETE OR VERTICAL GRANITE CURB, ASPHALT TREATED FELT SHALL BE PLACED BETWEEN THE SIDEWALK AND CURB FOR THE TOTAL DEPTH OF THE SIDEWALK.
3. FASTENERS (20d NAILS OR SCREWS) SHALL BE CORROSION RESISTANT TO THE TREATED LUMBER.
4. FOR SPECIFICATIONS FOR EXPANSION/CONTRACTION JOINTS AND LENGTHS OF SECTIONS, SEE SECTION 616.
5. JOINTS BETWEEN CURB SECTIONS SHALL BE MORTARED IN CONFORMANCE WITH SECTION 616.
6. BITUMINOUS CONCRETE AND TREATED TIMBER CURB SHALL BE IN CONFORMANCE WITH SECTION 616.
7. TWO INCH MINIMUM CLEARANCE FROM FACE OF CONCRETE TO EDGE OF REINFORCING STEEL.

OTHER STDS. REQUIRED: **NONE**

REVISIONS AND CORRECTIONS

FEB. 11, 2008 - ORIGINAL APPROVAL DATE

APPROVED

Kevin S. Marshia
ROADWAY, TRAFFIC & SAFETY ENGINEER

Richard Theriault
DIRECTOR OF PROGRAM DEVELOPMENT

Mark D. Richter
FEDERAL HIGHWAY ADMINISTRATION

CURBING

VERMONT AGENCY OF TRANSPORTATION

STANDARD

C-10

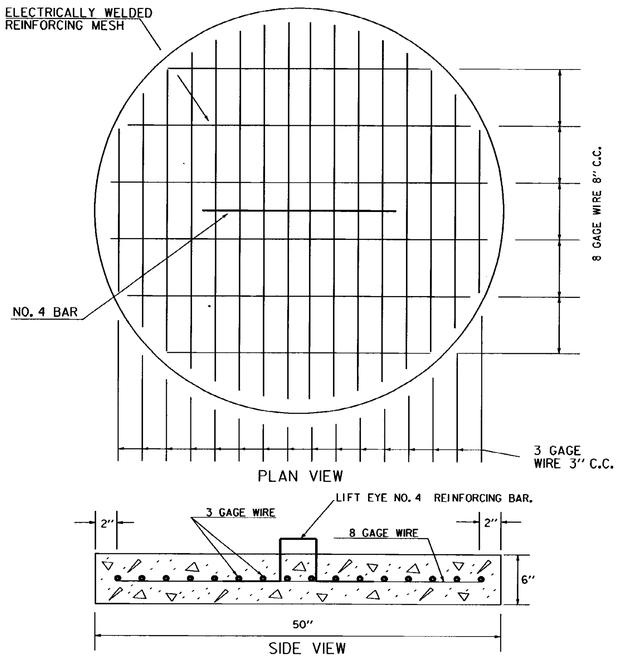

PRECAST REINFORCED CONCRETE BASE

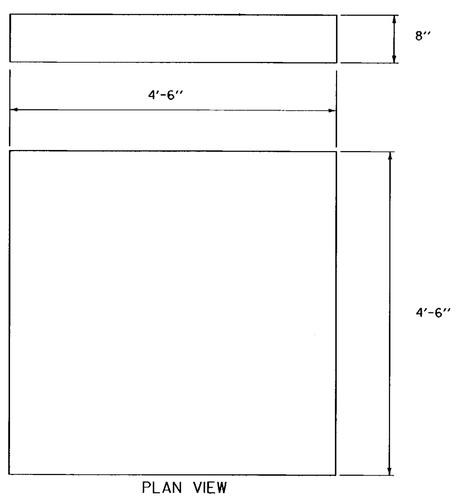

DROP INLET PIPE BASE CAST IN PLACE
(CONCRETE CONFORMING TO STRUCTURAL CONCRETE CLASS B)

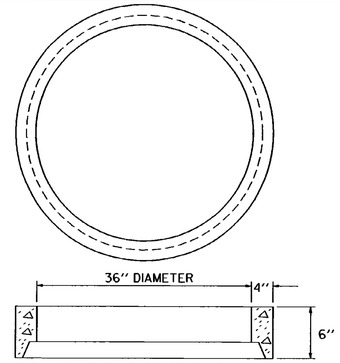

PRECAST REINFORCED CONCRETE PIPE RISER

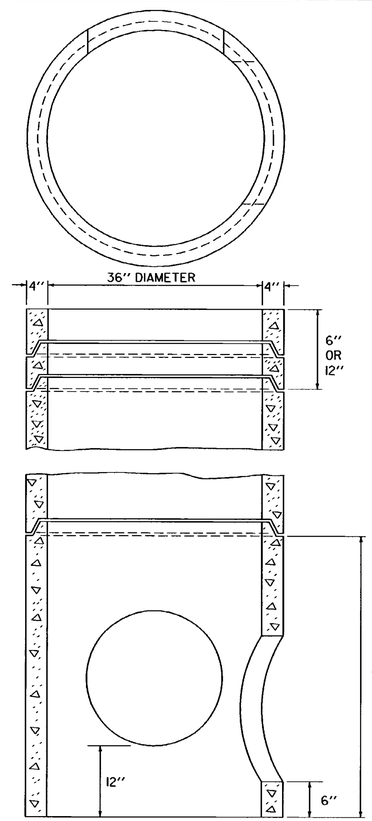

PIPE SECTIONS FOR DROP INLETS

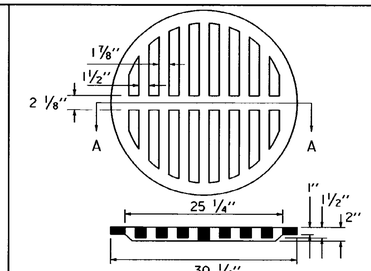

SECTION A-A
CAST IRON GRATE

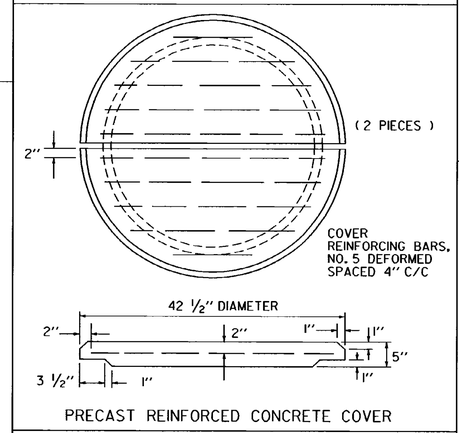

PRECAST REINFORCED CONCRETE COVER

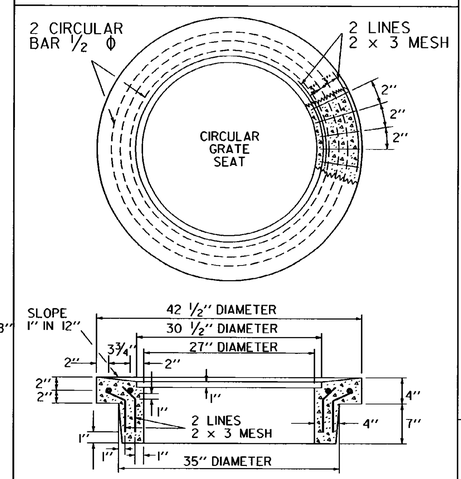

PRECAST REINFORCED CONCRETE RING FOR GRATE

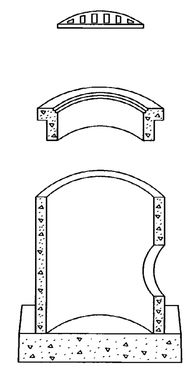

PRECAST REINFORCED CONCRETE PIPE DROP INLET WITH CAST IRON GRATE

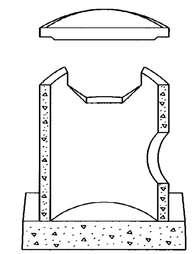

PRECAST REINFORCED CONCRETE PIPE DROP INLET WITH CONCRETE COVER

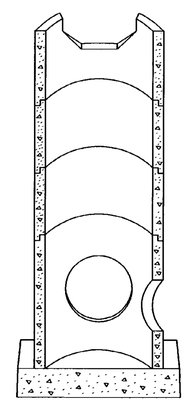

PRECAST REINFORCED CONCRETE PIPE DROP INLET WITH THROATED RISER

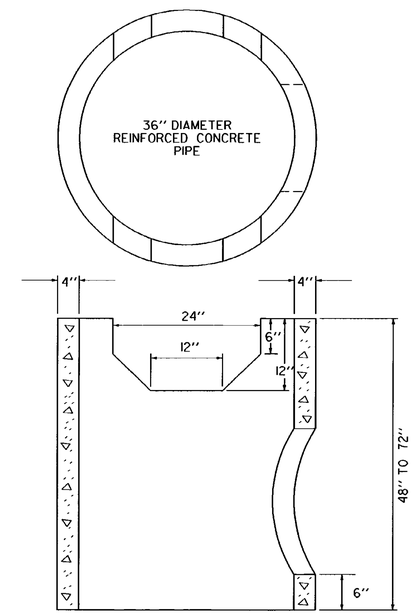

PRECAST REINFORCED CONCRETE PIPE DROP INLET WITH THROAT

NOTE :
THESE DROP INLETS SHOULD NOT BE USED IN AREAS OF VEHICULAR TRAFFIC OR IN BENCHES ON CUT SLOPES

REVISIONS AND CORRECTIONS

DEC. 6, 1971 - ORIGINAL APPROVAL DATE
JUNE 1, 1994 - REISSUED, WITHOUT CHANGE, UNDER NEW SIGNATURES.

APPROVED

APPROVED FOR THIS PROJECT AND/OR DESIGN IMPLEMENTATION. FHWA FINAL APPROVAL PENDING.

Gordon D. MacArthur P.E.
DIRECTOR OF ENGINEERING

Robert M. Murphy PE
DESIGN ENGINEER

PRECAST REINFORCED CONCRETE PIPE DROP INLET WITH CAST IRON GRATE

PRECAST REINFORCED CONCRETE PIPE DROP INLET WITH CONCRETE COVER

VERMONT AGENCY OF TRANSPORTATION

STANDARD

D-1

DETAILS OF CURB DRAINS

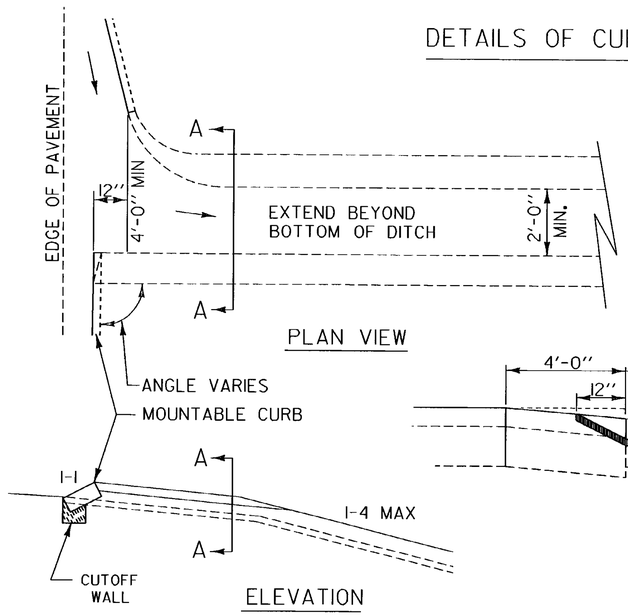

NOT TO BE USED ON ROADWAY GRADES EXCEEDING 2%

A 6'' DEPTH OF COARSE SAND OR GRAVEL SHALL BE USED TO REPLACE UNSUITABLE MATERIAL ENCOUNTERED BELOW SUBGRADE AT THE DIRECTION OF THE ENGINEER.

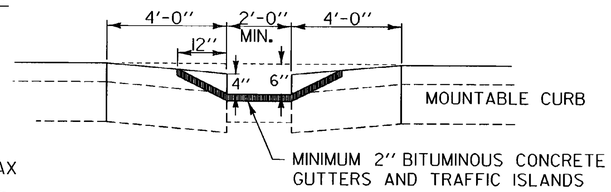

SECTION A-A

DROP INLET WITH GRATE IN TREATED GUTTER

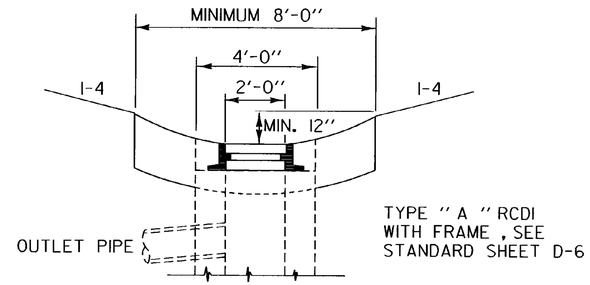

SODDING

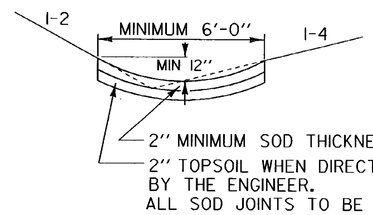

STONE FILL TYPE I
STONE FILL TYPE II

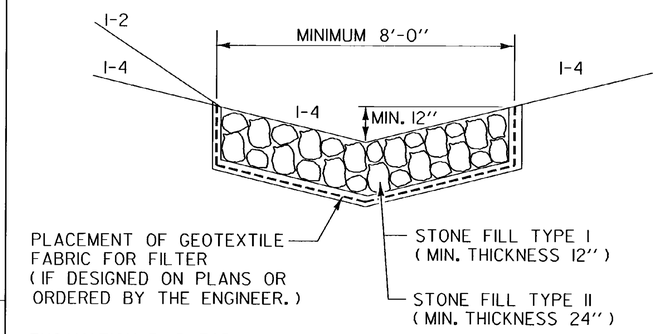

EXCAVATION PAID FOR
AS COMMON EXCAVATION.

BITUMINOUS CONCRETE GUTTERS AND TRAFFIC ISLANDS

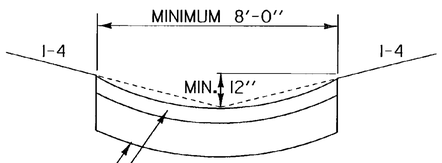

2'' BITUMINOUS CONCRETE APPLIED
IN TWO COURSES.

6'' DEPTH OF GRAVEL OR
SAND IF DIRECTED BY THE ENGINEER.

PORTLAND CEMENT CONCRETE GUTTER

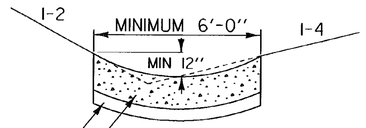

6'' STRUCTURAL CONCRETE

6'' DEPTH OF GRAVEL OR SAND IF
DIRECTED BY THE ENGINEER

ON ALL OVERLAPS , PLACE STAPLES
EVERY 18'', ALTERNATING ON BOTH SIDES
OF 6'' OVERLAP.

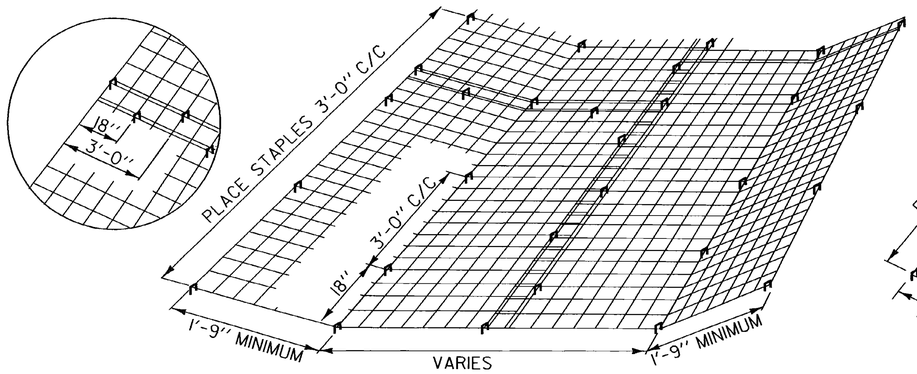

TYPICAL FLAT BOTTOM DITCH

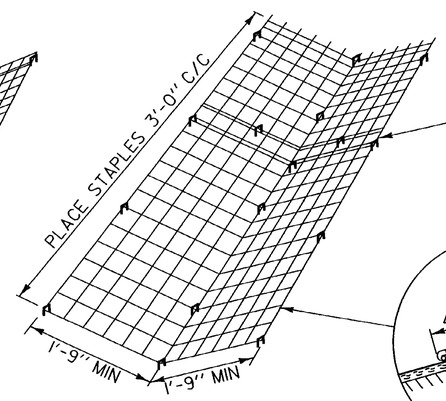

TYPICAL '' V '' DITCH

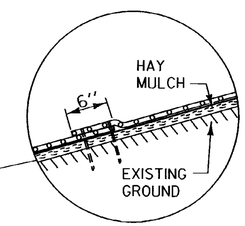

TYPICAL OVERLAP

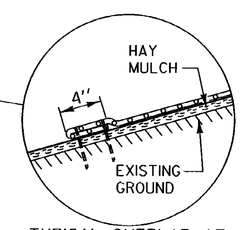

TYPICAL OVERLAP AT
ALL ENDS AND EDGES

DETAILS OF PLACING EROSION MATTING

REVISIONS AND CORRECTIONS

APR. 2, 1986 - ORIGINAL APPROVAL DATE

JUNE 1, 1994 - REISSUED, WITHOUT CHANGE, UNDER NEW SIGNATURES.

APPROVED

APPROVED FOR THIS PROJECT AND/OR DESIGN IMPLEMENTATION. FHWA FINAL APPROVAL PENDING.

DIRECTOR OF ENGINEERING

P.E.

DESIGN ENGINEER

TREATED GUTTERS

VERMONT AGENCY OF TRANSPORTATION

STANDARD

D - 3

REINFORCED CONCRETE DROP INLET TOP WITH VERTICAL CURB

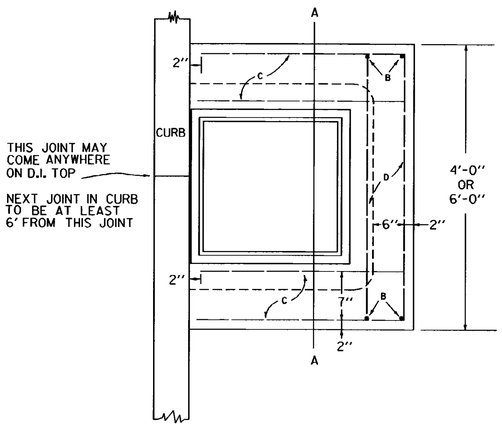

PLAN

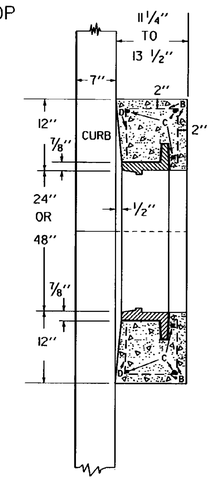

SECTION A-A

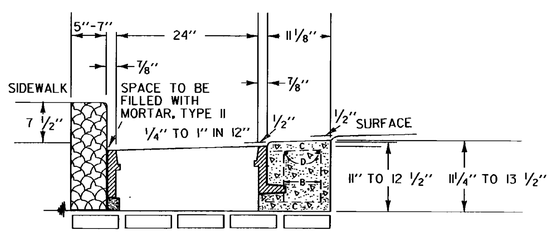

DEPTH OF CURB ACROSS D.I. TO BE 18" ± 1"

ELEVATION OF REINFORCED CONCRETE DROP INLET TOP WITH VERTICAL CURB

STEEL SCHEDULE FOR 4'-0" X 4'-0" D.I.

BAR	NO	LENGTH	
B	2	4'-8"	0'-6" 3'-8" 0'-6"
C	6	2'-9"	STRAIGHT
D	2	3'-8"	STRAIGHT

CONCRETE CLASS B 0.28 C.Y.
REINFORCING STEEL 35 LBS.

STEEL SCHEDULE FOR 4'-0" X 6'-0" D.I.

BAR	NO	LENGTH	
B	2	6'-8"	0'-6" 3'-8" 0'-6"
C	6	2'-9"	STRAIGHT
D	2	5'-8"	STRAIGHT

CONCRETE CLASS B 0.34 C.Y.
REINFORCING STEEL 43 LBS.

GENERAL NOTES

CONCRETE TO CONFORM TO STRUCTURAL CONCRETE, SECTION 501.

ALL REINFORCING STEEL TO BE No. 5 DEFORMED BARS.

THESE TOPS TO BE USED WITH BOTTOM SECTIONS SHOWN ON STANDARD SHEETS D-5, D-8, AND D-13.

ALL REINFORCING STEEL TO HAVE A 2" MINIMUM COVER

CAST IRON GRATE AND FRAME IN ACCORDANCE AND PAID FOR UNDER SECTION 604.

PRECAST COVER TO BE CONSTRUCTED AND INSTALLED AS SHOWN ON STANDARD SHEET D-8.

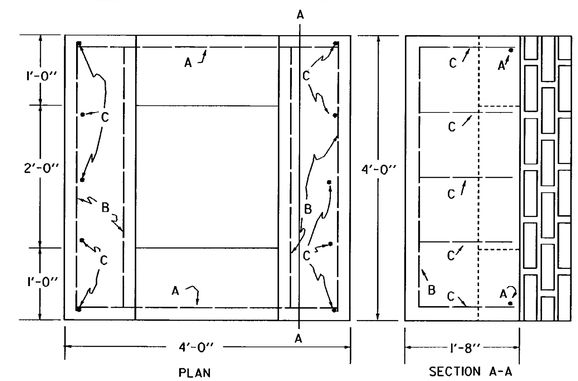

PLAN

SECTION A-A

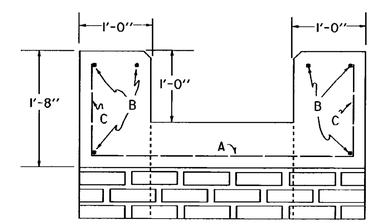

ELEVATION

CONCRETE THROAT ADAPTER

STEEL SCHEDULE

BAR	NO	LENGTH	TYPE
A	2	3' - 8"	STRAIGHT
B	6	3' - 8"	STRAIGHT
C	10	1' - 4"	STRAIGHT

ALL REINFORCING STEEL TO BE No. 5 DEFORMED BARS.

CONCRETE TO CONFORM TO STRUCTURAL CONCRETE SECTION 501.

CONCRETE CLASS B 0.59 C.Y.
(NOT INCLUDING COVER)
REINFORCING STEEL 45 LBS.

REVISIONS AND CORRECTIONS

DEC. 6, 1971 - ORIGINAL APPROVAL
JUNE 1, 1994 - REISSUED, WITHOUT CHANGE, UNDER NEW SIGNATURES.

APPROVED

APPROVED FOR THIS PROJECT AND/OR DESIGN IMPLEMENTATION. FHWA FINAL APPROVAL PENDING.

Gordon S. MacArthur, P.E.
DIRECTOR OF ENGINEERING

John M. Murphy, P.E.
DESIGN ENGINEER

REINFORCED CONCRETE DROP INLET WITH VERTICAL CURB

REINFORCED CONCRETE DROP INLET THROAT ADAPTER

VERMONT AGENCY OF TRANSPORTATION

STANDARD

D-9

STEEL GRATE

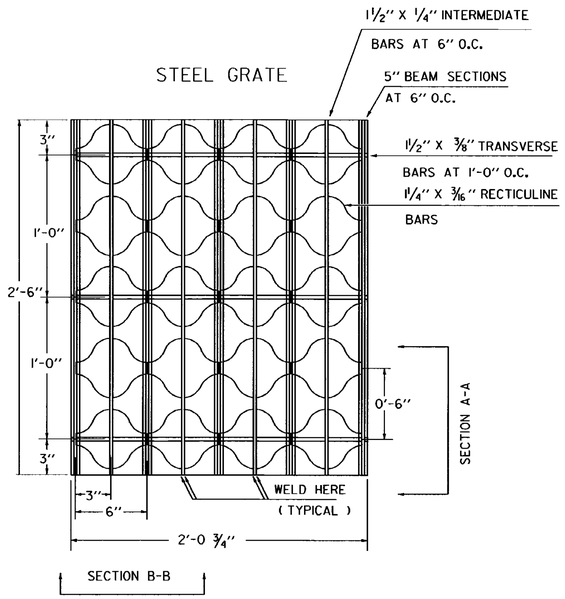

PLAN

GRATE SIZE SINGLE 24 3/4" X 30"
DOUBLE 24 3/4" X 54"

WEIGHT 95 LBS OR MORE
GRATES SHALL BE CAPABLE OF SUPPORTING H-20 (32,000 LB. AXLE LOAD) INCLUDING 30% IMPACT.

UNIT STRESSES (LBS PER SQ. IN.)		18,000	20,000
MAIN BAR PARALLEL TO TRAFFIC	H-20	49"	53"
MAIN BAR PERPENDICULAR TO TRAFFIC	H-20	39"	42"

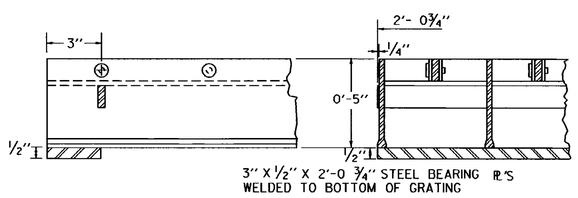

SECTION A-A SECTION B-B

CAST IRON COVER WITH FRAME

BAR	NO.	LENGTH	
B	4		8" 3'-8" 8"
C	6	3'-8"	STRAIGHT
D	4	3'-8"	STRAIGHT

ALL REINFORCING STEEL TO BE No. 5 DEFORMED BARS

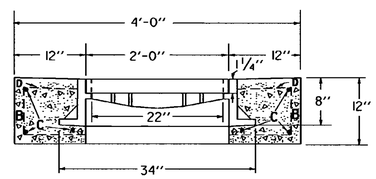

ELEVATION

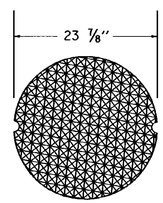

PLAN

GENERAL NOTES:

WEIGHT OF FRAME AND COVER = 425 LBS.

CAST IRON GRATE WITH FRAME

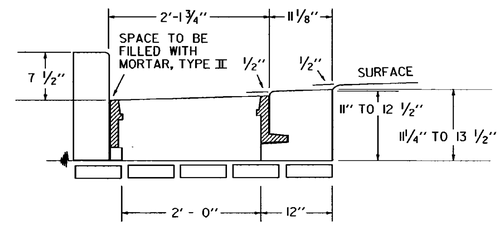

ELEVATION OF REINFORCED CONCRETE DROP INLET WITH VERTICAL GRANITE CURB AND 3 FLANGE CAST IRON FRAME FOR CAST IRON GRATE

SEE STANDARD D-9 FOR CONCRETE VOLUME, REINFORCING STEEL SCHEDULE, AND CURB JOINT DETAIL.

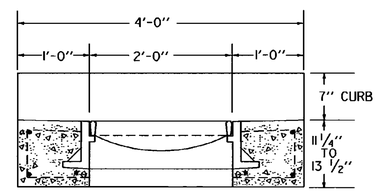

ELEVATION

WEIGHT OF 3 FLANGED FRAME AND GRATE

GRATE	220 LBS
FRAME	260 LBS
TOTAL	480 LBS

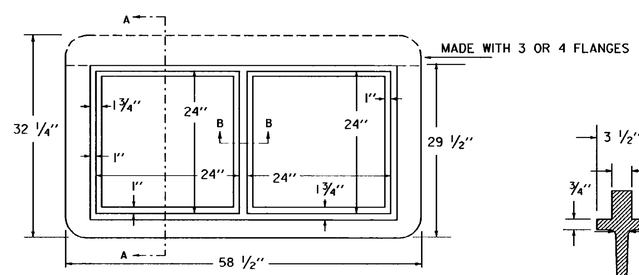

PLAN

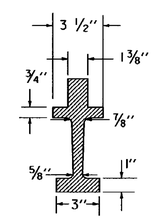

SECTION B-B

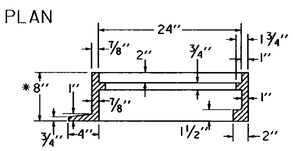

SECTION A-A

RECTANGULAR CAST IRON FRAME FOR TWO 24" SQUARE CAST IRON GRATES

CAST IRON GRATE, TYPE A

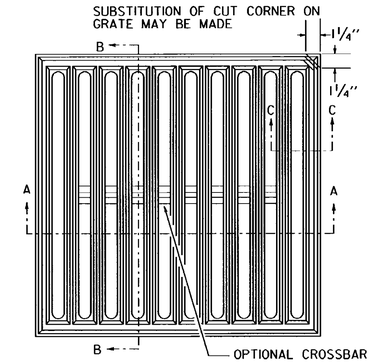

PLAN

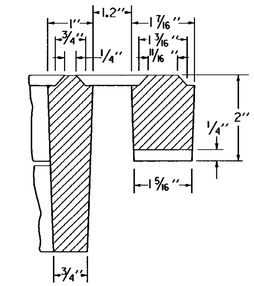

SECTION C-C

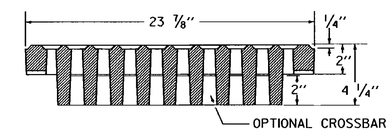

SECTION A-A

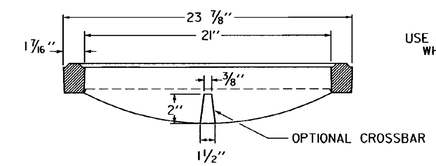

SECTION B-B

USE OF THE TYPE A GRATE IS PROHIBITED WHERE BICYCLE TRAFFIC IS EXPECTED

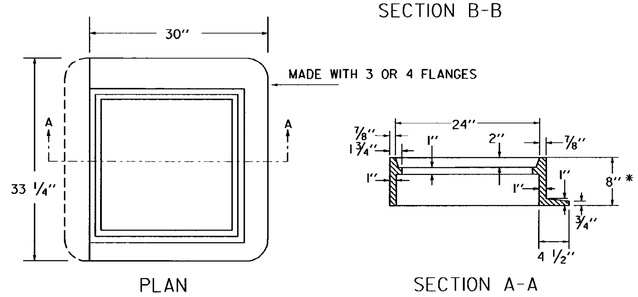

PLAN SECTION A-A

SQUARE CAST IRON FRAME FOR CAST IRON GRATE TYPE A

* NOTE: FRAME DEPTH TO BE "6" WHEN USED IN CONJUNCTION WITH DROP INLET DETAILED ON STANDARD D-6.

THIS FRAME TO BE PLACED IN DROP INLET TOP BEFORE CONCRETE IS POURED.

4 FLANGES UNLESS OTHERWISE INDICATED. FRAMES TO BE FURNISHED WITH 3 FLANGES WHEN USED IN CONJUNCTION WITH CURB OR AS DIRECTED BY THE ENGINEER.

REVISIONS AND CORRECTIONS

DEC. 6, 1971 - ORIGINAL APPROVAL
APR. 25, 1972 - CAST IRON COVER CHANGED FROM SQUARE TO CIRCULAR
SEPT. 4, 1980 - OPTIONAL CROSSBAR ADDED TO A GRATE; NOTE ADDED TO A GRATE FRAME DETAIL
AUG. 25, 1981 - NOTE ADDED RESTRICTING USE OF TYPE A GRATE
JUNE 1, 1994 - REISSUED, WITHOUT CHANGE, UNDER NEW SIGNATURES.

APPROVED

APPROVED FOR THIS PROJECT AND/OR DESIGN IMPLEMENTATION. FHWA FINAL APPROVAL PENDING.

Gordon S. MacArthur, P.E.
DIRECTOR OF ENGINEERING

Robert M. Murphy, PE
DESIGN ENGINEER

STEEL GRATE
CAST IRON GRATE TYPE A
CAST IRON COVER

VERMONT AGENCY OF TRANSPORTATION

STANDARD D-11

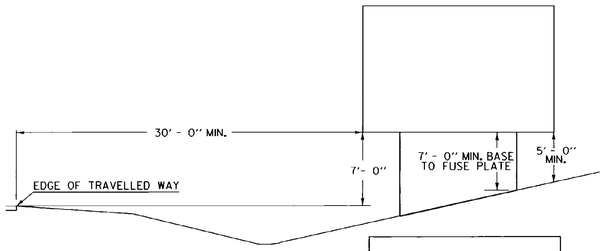

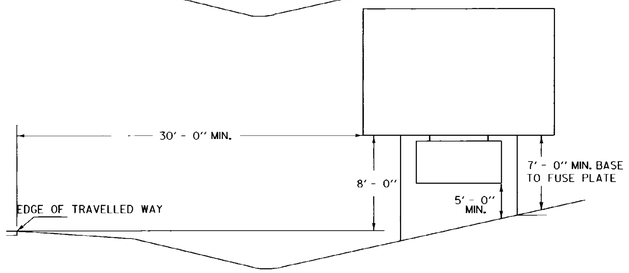

GUARDRAIL DEFLECTION CHART

(PER AASHTO - ROADSIDE DESIGN GUIDE - 1988)

TYPE		SPACING	DEFLEC.
Three Cable	w/Steel Posts	16'-0"	12 ft.
	w/Wooden Posts	12'-6"	12 ft.
W-Beam	w/WEAK Posts	12'-6"	7 ft.
	w/Strong Posts	6'-3"	3 ft.
Box Beam		6'-0"	5 ft.
Thrie Beam	w/Weak Posts	12'-6"	4 ft.
	w/Strong Posts	6'-3"	2 ft.

This chart lists the theoretical deflection distance upon impact of various guardrail with different type and post spacing.

WHEN PLACED BEHIND GUARDRAIL AND BEYOND THE DEFLECTION DISTANCE FOR THAT PARTICULAR RAIL, SIGN POSTS DO NOT HAVE TO BE PLACED ON YIELDING SUPPORTS. SIGN POSTS SHALL BE PLACED ON YIELDING SUPPORTS WHEN THEY CAN BE STRUCK BY AN ERRANT VEHICLE LEAVING THE ROADWAY AT AN ENCROACHMENT ANGLE OF APPROXIMATELY 15 DEGREES OR LESS.

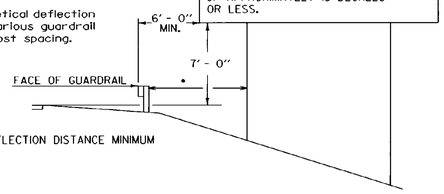

INSTALLATION DETAILS

NORMALLY SIGNS SHOULD BE MOUNTED AT 93° TO THE DIRECTION OF TRAFFIC. ON CURVED ALIGNMENT THE ANGLE OF PLACEMENT SHOULD BE DETERMINED BY THE PATH OF APPROACHING TRAFFIC RATHER THAN BY THE ROADSIDE EDGE AT THE POINT WHERE THE SIGN IS LOCATED.
WHEN INSTALLING OVERHEAD SIGNS, CANT THE SIGN FROM THE TOP TOWARD APPROACHING TRAFFIC AT A THREE DEGREE TILT ANGLE.

GUIDE SIGNS

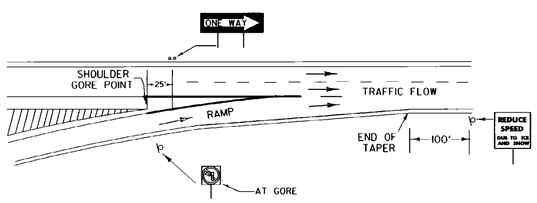

SIGN PLACEMENT AT END OF RAMP

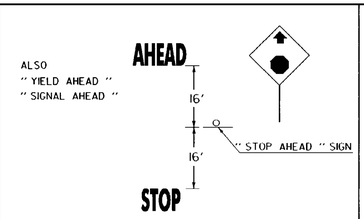

ALSO
" YIELD AHEAD "
" SIGNAL AHEAD "

WORD MARKING LAYOUT DETAIL

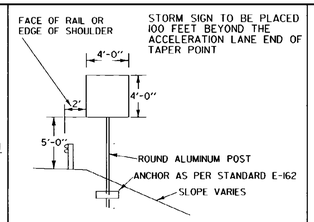

STORM SIGN TO BE PLACED 100 FEET BEYOND THE ACCELERATION LANE END OF TAPER POINT

STORM SIGN

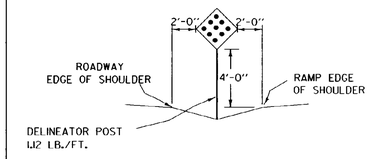

HAZARD MARKER

MATERIALS:
THE SIGN BASE MATERIAL USED FOR THIS SIGN MAY BE EITHER HIGH DENSITY 5/8" PLYWOOD OR 0.100" FLAT SHEET ALUMINUM.

COLORS:
THIS SIGN SHALL HAVE A REFLECTORIZED YELLOW BACKGROUND WITH BLACK PAINTED OR LETTERING FILM STRIPES.

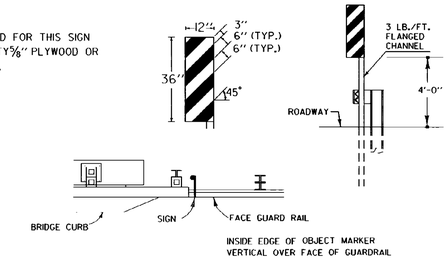

OBJECT MARKER

(TO BE USED WHEN FULL WIDTH SHOULDERS ARE NOT CARRIED ACROSS THE BRIDGE)

MARKERS MOUNTED ON THE LEFT SIDE SHALL HAVE THE DIAGONAL STRIPES SLOPING TOWARD CENTERLINE

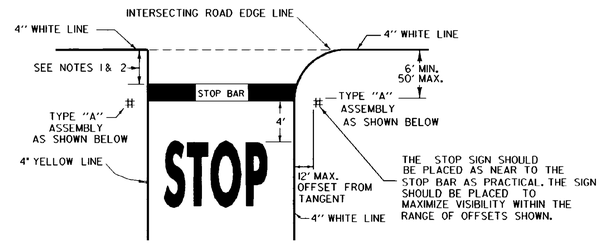

EXIT RAMP

SHOWN FOR ILLUSTRATION PURPOSES

NOTES:

1. THE STOP BAR SHOULD BE PLACED AT THE DESIRED STOPPING POINT. IN NO CASE MORE THAN 30' OR LESS THAN 4' FROM THE NEAREST EDGE OF THE INTERSECTING ROADWAY.
2. AT A SIGNALIZED INTERSECTION, DELETE WORDING " STOP " AND THE STOP SIGN AND PLACE STOP BAR A MINIMUM OF 40' FROM THE NEAREST SIGNAL HEAD FOR THE APPROACH.
3. EXCLUDE THE STOP BAR FOR A YIELD CONDITION.

PAVEMENT MARKING & STOP SIGN LOCATION DETAILS

FOR OFF RAMP

TYPE "A" ASSEMBLY IS WITH "STOP" SIGN
TYPE "B" ASSEMBLY IS WITH "YIELD" SIGN

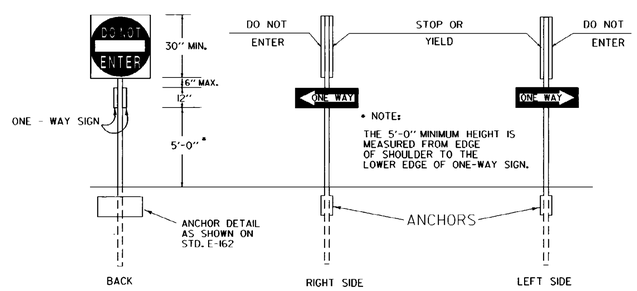

MOUNT ON - 3 LBS/FT FLANGED CHANNEL

(SEE BRACKET DETAIL AS SHOWN ON STD. E-160)

REGULATORY SIGN ASSEMBLY DETAIL

FOR OFF RAMP

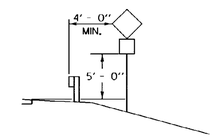

SIGN WITH SUPPLEMENTAL PLAQUE

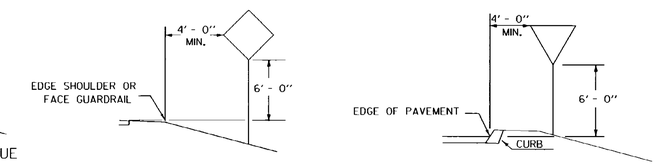

STANDARD SIGN PLACEMENT

RAMP

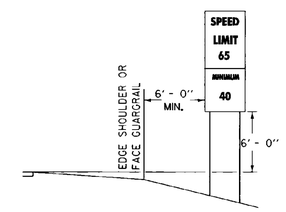

REGULATORY SIGN

SPEED LIMIT SIGN TO BE PLACED 1600 FEET BEYOND THE END OF THE ACCELERATION LANE TAPER POINT.

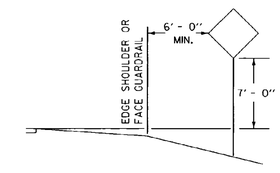

WARNING SIGN

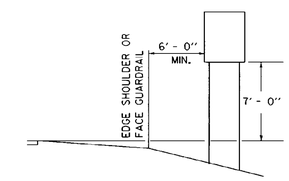

REGULATORY SIGN

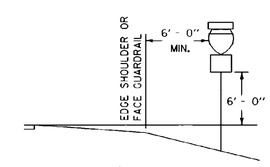

ROUTE MARKER

ROUTE REASSURANCE MARKER TO BE PLACED 600' BEYOND THE END OF THE ACCELERATION LANE TAPER POINT

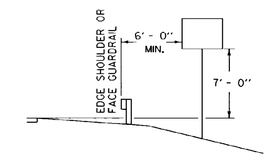

GUIDE SIGN

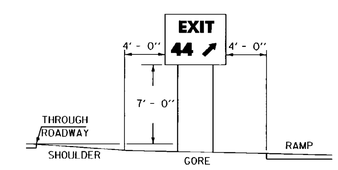

GORE SIGN

STANDARD SIGN PLACEMENT

MAINLINE

OTHER STDS. REQUIRED: E-160 E-161 E-162 E-163

REVISIONS AND CORRECTIONS

APR. 01, 1988 - DATE OF ORIGINAL ISSUE
JUNE 21, 1989 - FHWA - CHANGE TO 7' FUSE PLATE CLEARANCE
AUG. 08, 1995 - DELETED TWO RAIL ALUMINUM FROM DEFLECTION CHART AND MINOR NOTE REVISIONS

APPROVED FOR THIS PROJECT AND/OR DESIGN IMPLEMENTATION. FHWA FINAL APPROVAL PENDING.

APPROVED

Gordon B. MacArthur
DIRECTOR OF ENGINEERING

David A. Ross
TRAFFIC AND SAFETY ENGINEER

STANDARD SIGN PLACEMEMT EXPRESSWAY AND FREEWAY

/traf/std/stdel20.dgn : stdel20.i

VERMONT AGENCY OF TRANSPORTATION

STANDARD
E-120

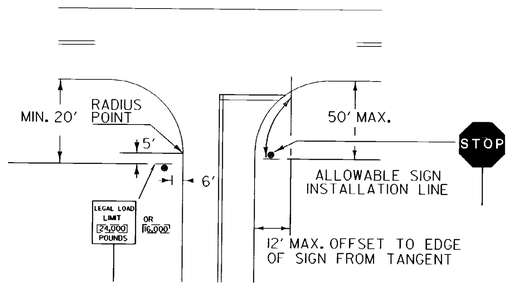

STOP SIGN SHALL BE PLACED ON DRIVERS RIGHT, MAINTAINING MAXIMUM VISIBLITY. CLEARANCE SHALL BE A MINIMUM OF 6' AND A MAXIMUM OF 50' FROM EDGE LINE OF INTERSECTING ROADWAY AND DOES NOT HAVE TO BE ADJACENT TO THE STOP BAR.

LEGAL LOAD LIMIT AND STOP SIGNS AT INTERSECTIONS WITH TOWN HIGHWAYS

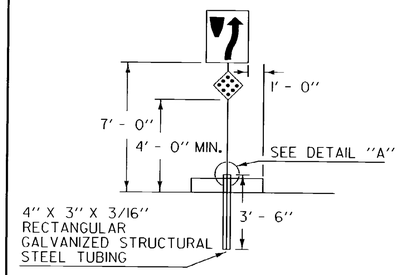

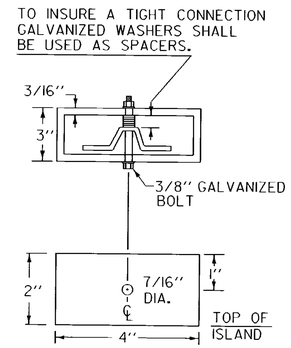

SLEEVE DETAIL "A"

SIGNS ON MEDIAN ISLANDS IN THE LINE OF TRAFFIC

INCREASE VERTICAL CLEARANCE TO 7' IN AREAS OF FREQUENT ROADSIDE PARKING OR PEDESTRIAN ACTIVITY

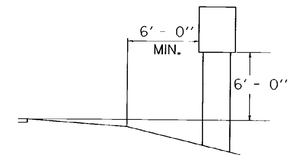

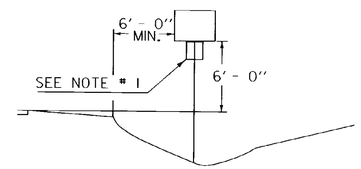

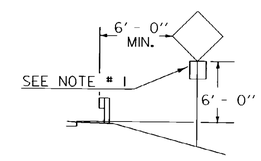

RURAL

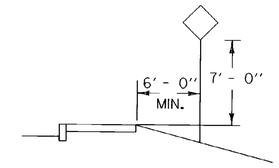

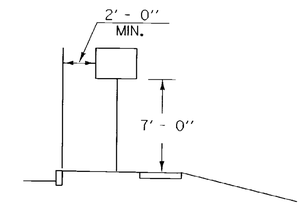

IF SUFFICIENT CLEARANCE IS NOT AVAILABLE BETWEEN CURB AND SIDEWALK MOUNT SIGN BEHIND SIDEWALK AS SHOWN AT TOP. CHECK FOR ADEQUATE R.O.W..

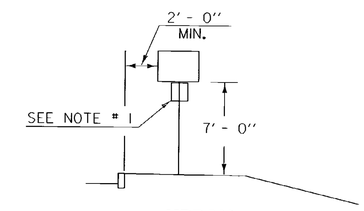

URBAN

NOTES:

1. IN BOTH RURAL AND URBAN LOCATIONS. IF A SECONDARY SIGN IS MOUNTED BELOW ANOTHER SIGN, THE MINIMUM CLEARANCE MAY BE REDUCED BY ONE FOOT.
2. IN RURAL AREAS WITH NO OR MINIMAL SHOULDER, THE LATERAL CLEARANCE TO THE EDGE OF A SIGN SHOULD BE A MINIMUM OF 12' FROM THE EDGE OF THE TRAVELED WAY.
3. ALSO SEE OTHER STANDARD SHEETS FOR MOUNTING CLEARANCE AND SPACING OF DESTINATION AND ROUTE MARKER ASSEMBLIES AND TOWN LINE SIGNS.

POST REFERENCE:

REFER TO THE DETAILS ON THE APPROPRIATE STANDARD DRAWING FOR INFORMATION CONCERNING THE PROPER MOUNTING OF SIGNS ON APPROPRIATE POSTS.

OTHER STDS. REQUIRED: **E-160** **E-161** **E-162** **E-163** **E-164**

REVISIONS AND CORRECTIONS

JAN. 23, 1995 - DATE OF ORIGINAL ISSUE

AUG. 08, 1995 - VARIOUS MINOR NOTE REVISIONS

APPROVED FOR THIS PROJECT AND/OR DESIGN IMPLEMENTATION. FHWA FINAL APPROVAL PENDING.

APPROVED

Gordon S. MacArthur
DIRECTOR OF ENGINEERING

David A. Ross
TRAFFIC AND SAFETY ENGINEER

STANDARD SIGN PLACEMENT CONVENTIONAL ROAD

/traf/std/stdel21.dgn : stdel21.i

VERMONT AGENCY OF TRANSPORTATION

STANDARD

E-121

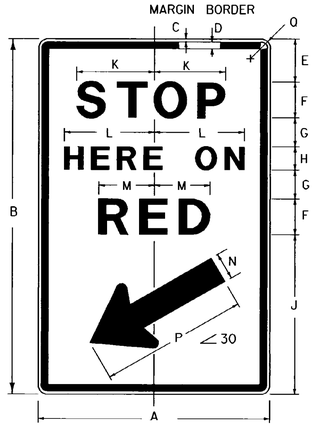

R10-6

SIGN	A	B	C	D	E	F	G	H
STD.	24	36	3/8	5/8	4	5D	2 1/2	3D
SPECIAL	36	48	5/8	7/8	6	6D	4	4D
	J	K	L	M	N	P	Q	
STD.	14	8 9/32	9 1/32	5 15/16	2 5/8	14 5/8	1 1/2	
SPECIAL	18	9 25/32	12 1/32	7 1/8	2 3/4	16	2 1/4	

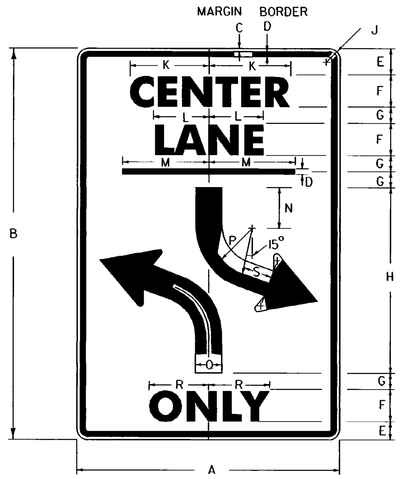

R3-9B

SIGN	DIMENSIONS (INCHES)									
	A	B	C	D	E	F	G	H	J	K
STD.	24	36	3/8	5/8	2 1/2	3E	1 1/2	16	1 1/2	8 7/16
SPECIAL	36	48	5/8	7/8	3 1/2	5E	1 1/2	20	2 1/4	14 1/16
	L		M	N	P	Q		R	S	
STD.	5 3/4		8	2 1/2	6	2		5 5/16	1 1/2	
SPECIAL	9 1/2		12	3	8	3		9 7/8	2	

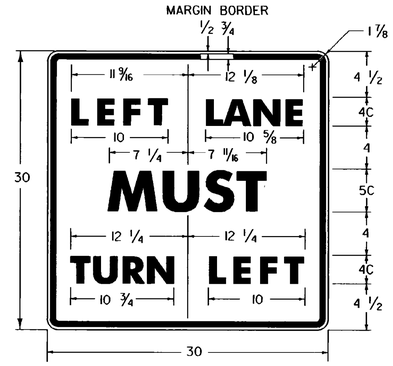

R3-7L

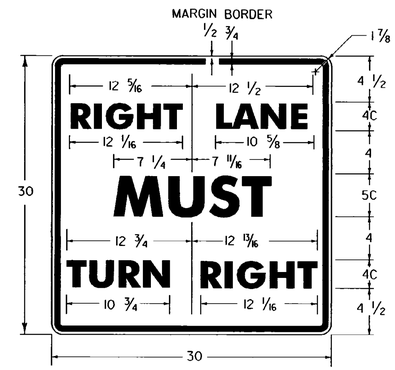

R3-7R

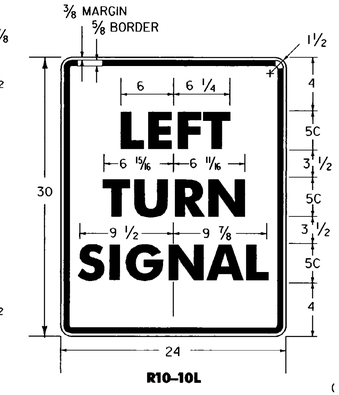

R10-10L

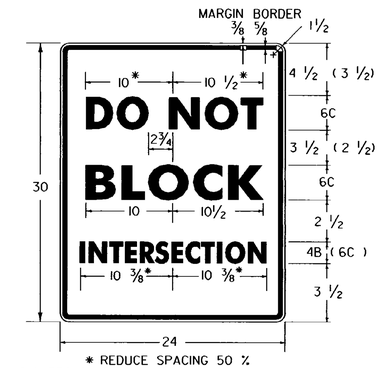

* REDUCE SPACING 50 %
( ) INDICATES DIMENSIONS FOR "DO NOT BLOCK DRIVE" SIGN

R10-7

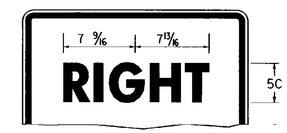

R10-10R

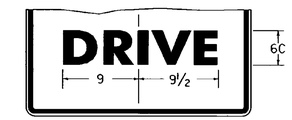

VR-656

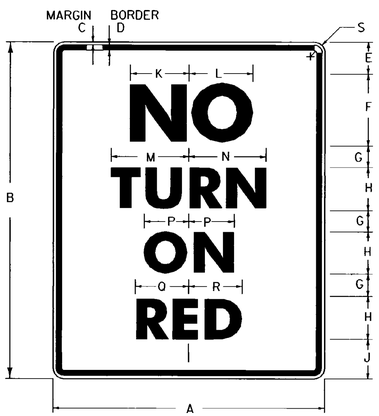

POST MOUNTING

R10-11A

SIGN	DIMENSIONS (INCHES)									
	A	B	C	D	E	F	G	H	J	K
STD.	24	30	3/8	5/8	3 1/4	5E	2 1/4	4D	3	4 13/16
SPECIAL	36	48	5/8	7/8	6	8E	3 1/2	6D	5 1/2	7 3/4
	L		M	N	P		Q		R	S
STD.	5 3/16		6 5/8	6 1/2	3 1/2		4 5/8		4 7/8	1 1/2
SPECIAL	8 1/4		10	9 3/4	5 1/4		6 7/8		7 3/8	2 1/4

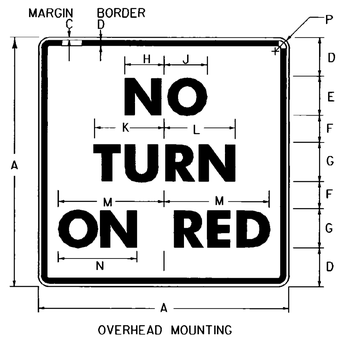

OVERHEAD MOUNTING

R10-11B

SIGN	DIMENSIONS (INCHES)													
	A	B	C	D	E	F	G	H	J	K	L	M	N	P
MIN.	18	3/8	5/8	2 3/4	3E	1 3/4	3D	2 15/16	3 1/16	5	4 7/8	7 1/8	5 1/4	1 1/2
STD.	24	3/8	5/8	3 1/2	4E	2 1/2	4D	3 7/8	4 1/8	6 5/8	6 1/2	9 1/2	6 1/2	1 1/2
SPECIAL	30	1/2	3/4	4 1/2	5E	3	5D	4 13/16	5 5/16	8 1/4	8 1/8	11 7/8	7 3/4	1 7/8

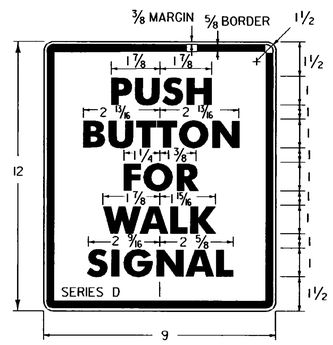

R10-4

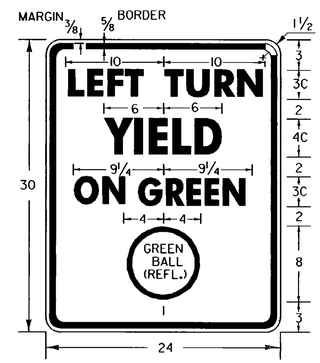

R10-12

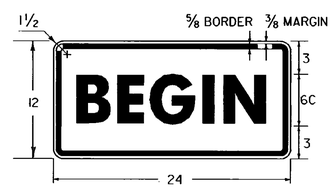

M4-11

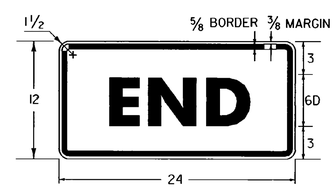

M4-6

GENERAL:

1. ALL DIMENSIONS IN INCHES.
2. SEE STANDARD E-144 FOR ARROWHEAD DETAILS.

COLORS:

THE REGULATORY SIGNS SHOWN ON THIS SHEET SHALL HAVE BLACK TEXT ON REFLECTORIZED WHITE BACKGROUND, UNLESS OTHERWISE NOTED. THE COLORS SHALL CONFORM WITH THE COLORS ADOPTED BY THE AMERICAN ASSOCIATION OF STATE HIGHWAY AND TRANSPORTATION OFFICIALS AND APPROVED BY THE DEPARTMENT OF TRANSPORTATION. FEDERAL HIGHWAY ADMINISTRATION.

MATERIALS:

THE SIGN BASE MATERIALS USED FOR REGULATORY SIGNS SHOWN ON THIS SHEET MAY BE ANY OF THE FOLLOWING OF THE MINIMUM THICKNESS NOTED.

	9'' X 12'' 18'' X 18''	24'' X 12'' 24'' X 24'' 24'' X 30'' 24'' X 36'' 30'' X 30''	36'' X 48''
FLAT SHEET ALUMINUM	0.060''	0.080''	0.100''
HIGH DENSITY OVERLAID PLYWOOD	1/2''	1/2''	5/8''
GALVANIZED FLAT SHEET STEEL	18 GAGE	16 GAGE	14 GAGE

THE REFLECTIVE MATERIAL FOR GROUND MOUNTED SIGNS SHALL BE AASHTO TYPE II OR III WHITE REFLECTIVE SHEETING APPLIED TO THE ENTIRE BACKGROUND OF THE SIGN. WHEN MOUNTED OVERHEAD, ALL SIGNS SHALL HAVE ENCAPSULATED LENS REFLECTIVE SHEETING APPLIED TO THE ENTIRE BACKGROUND OF THE SIGN. THE TEXT OF THE SIGNS MAY BE LETTERING FILM, SILK SCREENED OR HAND PAINTED. HAND PAINTING MUST BE COMPARABLE IN QUALITY TO THE RESULTS OBTAINED BY SILK SCREENING.

SPECIFICATIONS

REGULATORY SIGNS SHALL MEET THE VERMONT STANDARD SPECIFICATIONS FOR TRAFFIC SIGNS.

TEXT DESIGN:

LETTERS, DIGITS, ARROWS, SPACING AND TEXT DIMENSIONS SHALL CONFORM WITH THE ''STANDARD ALPHABET FOR HIGHWAY SIGNS AND PAVEMENT MARKINGS'' AND DESIGNS PRESCRIBED IN THE STANDARD HIGHWAY SIGNS AS SPECIFIED IN THE MANUAL ON UNIFORM TRAFFIC CONTROL DEVICES.

OTHER STDS. : E-144
REQUIRED

REVISIONS AND CORRECTIONS

OCT. 30, 1987 - DATE OF ORIGINAL ISSUE
SEPT. 20, 1995 - ADDED SIGN ID NUMBERS, MINOR NOTE REVISIONS, SHEET REALIGNMENT
AUG. 30, 1996 - MADE ERROR CORRECTIONS TO SIGN DETAILS R10-6 & R10-11B

APPROVED FOR THIS PROJECT AND/OR DESIGN IMPLEMENTATION. FHWA FINAL APPROVAL PENDING.

APPROVED

DIRECTOR OF ENGINEERING

TRAFFIC AND SAFETY ENGINEER

REGULATORY SIGN DETAILS

/traf/std/stdel40.dgn : stdel40.i

VERMONT AGENCY OF TRANSPORTATION

STANDARD
E-140

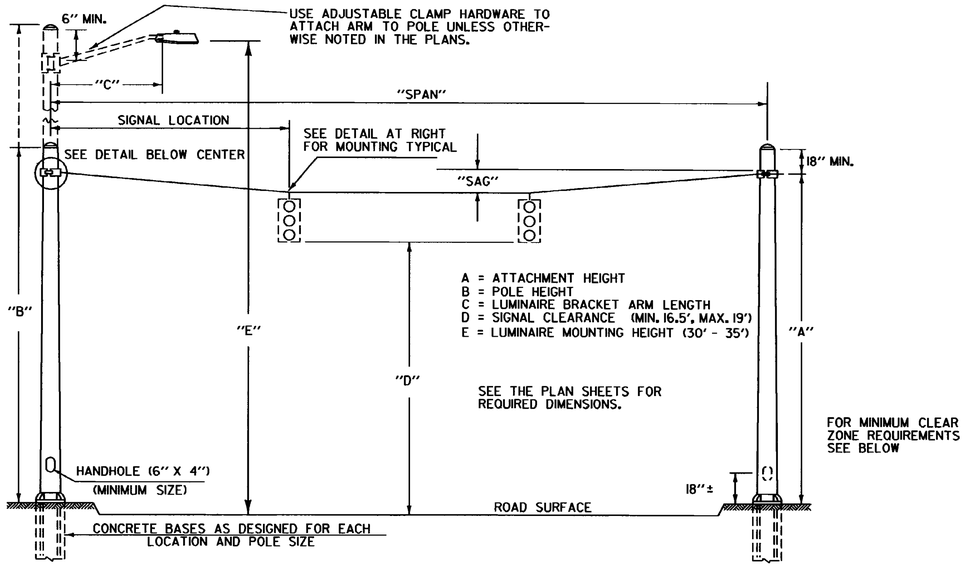

SPAN WIRE MOUNTED TRAFFIC SIGNALS WITH LUMINAIRES

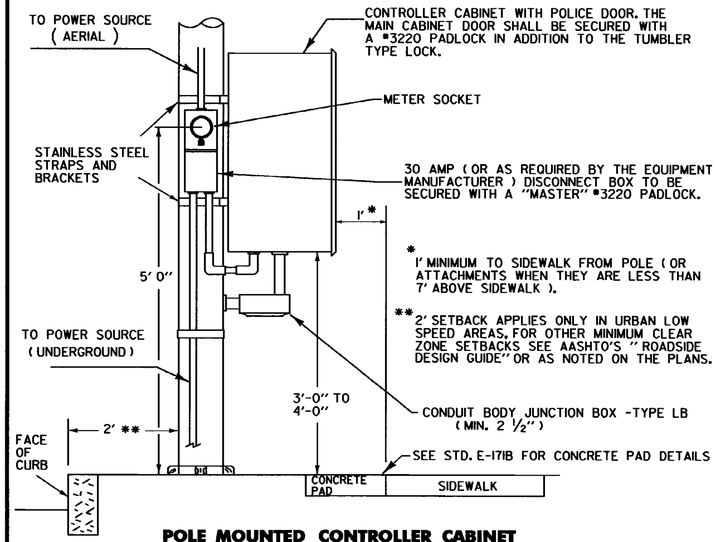

POLE MOUNTED CONTROLLER CABINET INSTALLATION TYPICAL

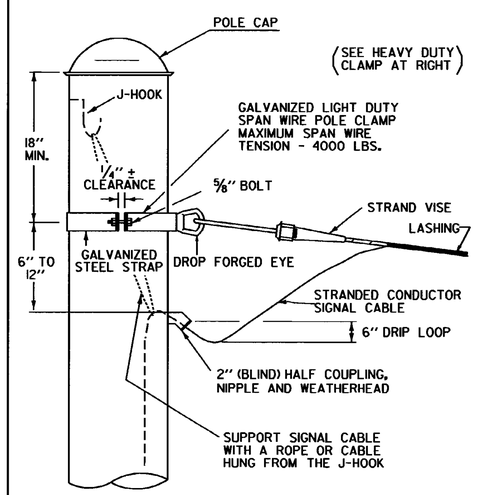

CABLE INSTALLATION TYPICAL WITH SPAN WIRE POLE CLAMP

(LIGHT DUTY GALVANIZED)

NOTES

1) ALL TRAFFIC SIGNAL EQUIPMENT SHALL MEET OR EXCEED ALL REQUIREMENTS OF THE LATEST REVISION OF THE NATIONAL ELECTRICAL MANUFACTURERS ASSOC. (NEMA) AND THE INTERNATIONAL MUNICIPAL SIGNAL ASSOC. (IMSA) STANDARDS FOR TRAFFIC CONTROL SYSTEMS.

2) ALL ELECTRICAL WIRE AND CABLE SHALL BE COPPER. ELECTRICAL SIGNAL CABLE FROM TRAFFIC SIGNAL CONTROLLER TO SIGNAL HEADS SHALL BE COMPOSED OF AWG # 12 (MIN) STRANDED CONDUCTORS, AND SHALL MEET IMSA WIRE AND CABLE SPECIFICATIONS.

3) ALL SIGNAL HEAD CABLES SHALL BE CONTINUOUS FROM THE CONTROLLER TO THE NEAREST SIGNAL HEAD TO WHICH THEY APPLY. THE CABLE SHALL ALSO BE CONTINUOUS FROM THE FIRST SIGNAL HEAD TO ANY ADDITIONAL HEADS WITH TERMINATION IN THE DISCONNECT HANGER.

4) THE PEDESTRIAN SIGNAL HEADS SHALL HAVE AUDIO SIGNALS TO INDICATE ALLOWABLE PEDESTRIAN MOVEMENT FOR THE VISUALLY IMPAIRED DURING THE PEDESTRIAN PHASE. THEY SHALL BE OF THE TYPE NORMALLY USED FOR SUCH AN INSTALLATION AND BE WIRED IN SUCH A WAY AS TO BE EASILY DEACTIVATED. AFTER THE AUDIO SIGNAL HAS BEEN INSTALLED AND FIELD TESTED IT SHALL BE DEACTIVATED, UNLESS AN EXCLUSIVE PEDESTRIAN PHASE IS OPERATING AT THE INTERSECTION. PEDESTRIAN PUSH BUTTONS SHALL BE INSTALLED AT EACH END OF EACH CROSSWALK WHERE ACTUATED PEDESTRIAN SIGNALS ARE INSTALLED OR AS SHOWN ON THE PLANS.

5) THE PEDESTRIAN HEADS SHALL HAVE TEXT ''WALK'', ''DONT WALK'', UNLESS OTHERWISE NOTED. THEY SHALL MEET THE LATEST REQUIREMENTS OF THE MANUAL ON UNIFORM TRAFFIC CONTROL DEVICES (MUTCD).

6) WHEN STREET LIGHTS ARE INSTALLED ON A TRAFFIC SIGNAL STRAIN POLE, AND THE STREET LIGHTING ITEM IS NOT PART OF THE CONTRACT, THE LUMINAIRES AND BRACKET ARMS ARE INCLUDED UNDER THE TRAFFIC CONTROL SIGNAL ITEM. THEY SHALL MEET ALL OF THE REQUIREMENTS OF SECTION 679 OF THE CURRENT VERMONT STANDARD SPECIFICATIONS FOR CONSTRUCTION.

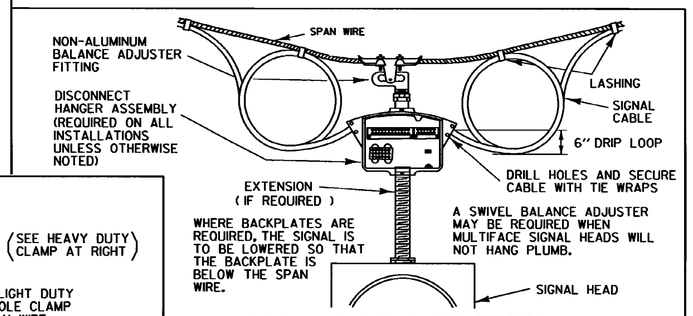

SPAN WIRE MOUNTING TYPICAL

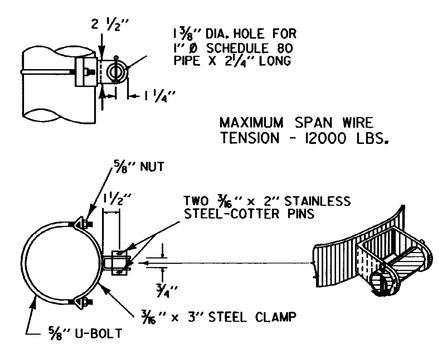

SPAN WIRE CLAMP

(HEAVY DUTY GALVANIZED)

7) SIGNAL TIMING IS APPROXIMATE AND IS NOT TO BE CONSIDERED FINAL. ALL NECESSARY HARDWARE TO CHANGE THE TIMING SHALL BE ON HAND WHEN THE SIGNALS ARE ACTIVATED. THE RESIDENT ENGINEER SHALL PERFORM CHECKS DURING THE AM AND PM PEAK PERIODS TO INSURE OPTIMUM SETTINGS. IF REQUIRED, APPROPRIATE TIMING CHANGES SHALL BE MADE TO ''FINE-TUNE'' THE CONTROLLER TO ITS BEST EFFICIENCY PRIOR TO COMPLETION OF THE PROJECT. TIMING CHANGES WILL BE APPROVED BY A REPRESENTATIVE OF THE V.A.O.T. TRAFFIC AND SAFETY DIVISION. TIMING ADJUSTMENTS SHALL BE SUBSIDIARY TO THE TRAFFIC CONTROL SIGNAL ITEM. MINOR TIMING CHANGES MADE TO ''FINE-TUNE'' THE CONTROLLER WILL NOT AFFECT THE RUNNING OF THE 30 DAY TEST PERIOD.

8) THE TRAFFIC SIGNAL STRAIN POLES SHALL BE BACK RAKED BEFORE THE WIRES AND SIGNALS ARE INSTALLED SO THAT THE POLES WILL BE PLUMB WHEN DEAD LOAD DEFLECTION DUE TO SPAN WIRE AND SIGNAL HEADS OCCURS. THE AMOUNT OF BACK RAKE SHALL BE AS SHOWN ON THE PLANS.

9) THE SIGNAL SYSTEM SHALL NOT OPERATE WITHOUT THE APPROPRIATE PAVEMENT MARKINGS AND RELATED SIGNING IN PLACE.

10) THE SIGNAL HEADS SHALL BE COVERED WITH AN OPAQUE COVERING UNTIL SUCH TIME AS THE SIGNAL SYSTEM IS FUNCTIONAL. AT NO TIME SHOULD THE HEADS BE VIEWED WITHOUT HAVING SOME FORM OF SIGNAL INDICATION, I.E. FLASHING OPERATION OR SEQUENCING AS PER PLAN.

11) THE CONFLICT MONITOR SHALL BE CAPABLE OF DETECTING A LACK OF RED, GREEN, YELLOW OR WALK SIGNAL AND SHALL BE CAPABLE OF STORING AT LEAST NINE PREVIOUS FAULTS FOR RECALL VIA A DISPLAY SCREEN.

12) THE VEHICLE DETECTOR AMPLIFIERS AND PHASE MODULES (WHERE APPROPRIATE) INSIDE THE CONTROLLER CABINET SHALL HAVE LABELS TO INDICATE WHICH PHASE AND MOVEMENT GOES WITH EACH. THE LABELS SHALL BE 1/2'' WIDE. THE LOOP DETECTOR LEAD-INS SHALL ALSO BE LABELED AT THE TERMINAL BOARD AS TO WHICH MOVEMENT AND LANE THEY ARE FROM. VEHICLE DETECTOR AMPLIFIERS SHALL BE OF A TYPE THAT FAIL IN THE ''ON'' POSITION.

13) TEST SWITCHES FOR EACH PHASE SHALL BE PLACED EITHER ON THE CABINET DOOR OR IN A CONVENIENT LOCATION ON THE SIDE WALL.

14) ALL DOOR MOUNTED SWITCHES AND BUTTONS SHALL BE PROTECTED FROM ACCIDENTAL BUMPING OR FROM COMING INTO CONTACT WITH OTHER EQUIPMENT WHEN THE DOOR IS CLOSED.

15) ALL SIGNALS SHALL BE WIRED SUCH THAT NO MORE THAN TWO THROUGH FACES (NORTH-SOUTH AND/OR EAST-WEST) ARE WIRED INTO ONE LOAD SWITCH EVEN THOUGH TWO APPROACHES ARE GREEN DURING THE SAME PHASE.

16) THE CONTRACTOR SHALL PROVIDE A MINIMUM OF TWO COPIES OF THE INSTRUCTION MANUALS FOR THE CONTROLLER, LOOP DETECTORS, CONFLICT MONITORS, AND ANY OTHER EQUIPMENT INCLUDED IN THE CABINET. ONE COPY IS TO BE KEPT IN THE CABINET AND THE OTHER GIVEN TO THE PARTY RESPONSIBLE FOR MAINTENANCE OF THE SIGNAL SYSTEM. ADDITIONAL COPIES TO BE PROVIDED AS CALLED FOR ON THE PLANS.

17) FOR PROGRAMMABLE SOLID STATE CONTROLLERS AND MASTERS, COPIES OF THE FINAL PROGRAM LISTINGS SHALL BE PROVIDED AND DISTRIBUTED AS DETAILED IN NOTE 16.

18) PHASING CHANGES, IF REQUESTED AND FEASIBLE, SHALL BE CONSIDERED AS PART OF THE CONTRACT. EXTRA COMPENSATION FOR THE CHANGES MAY BE AUTHORIZED FOLLOWING APPROVAL OF THE ESTIMATE.

19) TRAFFIC SIGNALS INSTALLED AT NEW LOCATIONS SHALL BE ACTIVATED ONLY UPON THE APPROVAL OF THE ENGINEER AND AFTER FLASHING FOR A MINIMUM OF 48 HRS.

20) IF THE PROJECT INVOLVES REPLACING OR IMPROVING AN EXISTING TRAFFIC SIGNAL, TRAFFIC SHALL BE CONTROLLED BY A UNIFORMED TRAFFIC OFFICER AT ANY TIME THE SIGNAL IS NOT SEQUENCING PER PLAN OR OPERATING ON FLASH. THE SWITCH FROM THE OLD TO THE NEW SIGNAL SHALL BE DONE DURING OFF-PEAK TRAFFIC AND IN SUCH A WAY AS TO MINIMIZE DOWN TIME.

21) TRAFFIC & PEDESTRIAN SIGNALS MOUNTED ON THE SIDE OF THE SIGNAL POLES MAY BE ATTACHED BY METHODS OTHER THAN THOSE SHOWN. SHOP DRAWINGS FOR THE ALTERNATE MOUNTING HARDWARE MUST BY SUBMITTED TO THE TRAFFIC DESIGN SECTION OF THE VAOT VIA THE RESIDENT ENGINEER FOR APPROVAL PRIOR TO CONSTRUCTION.

22) ALL RIGIDLY MOUNTED TRAFFIC AND PEDESTRIAN SIGNAL HEADS (POST TOP, SIDE OR ARM MOUNTED) SHALL BE HEAVY DUTY ALUMINUM, UNLESS OTHERWISE NOTED ON THE PLANS.

23) WHEN (FREE SWINGING) OPTICALLY PROGRAMMABLE SIGNAL HEADS ARE REQUIRED, THEY SHALL NOT BE INSTALLED ON THE SAME HANGER ASSEMBLY AS LIGHTER WEIGHT HEADS, UNLESS OTHERWISE NOTED ON THE PLANS. WHEN TWO HANGER ASSEMBLIES ARE INSTALLED CLOSE TOGETHER, THE BOTTOM OF THE SIGNALS SHALL BE CONNECTED BY A FLAT ARM ASSEMBLY TO PREVENT THE HEADS FROM HITTING EACH OTHER.

24) WHEN MASKING OF OPTICALLY PROGRAMMABLE SIGNAL HEADS IS REQUIRED, THE HEADS SHALL BE RIGIDLY MOUNTED OR TETHERED, AS SHOWN ON STD E-171B.

25) WHEN STREET LIGHTING AND SIGNALS ARE INSTALLED AT THE SAME LOCATION, THE POWER FOR EACH SHALL BE SEPARATED AT THE STANCHION OR SERVICE.

26) WHEN MORE THAN ONE SIGNAL IS POWERED FROM THE SAME SERVICE, EACH SHALL HAVE ITS OWN DISCONNECT AT THE STANCHION.

OTHER STDS. REQUIRED E - 171B, E - 175

REVISIONS AND CORRECTIONS

JUNE 21, 1989 - DATE OF ORIGINAL ISSUE
MAY 14, 1990 - FHWA COMMENTS
NOV. 17, 1993 - FHWA COMMENTS, NOTE REVISIONS AND POLE MOUNTING DETAIL MOVED TO E-171B
AUG. 9, 1995 - GENERAL REVISION OF NOTES & DETAILS

APPROVED FOR THIS PROJECT AND/OR DESIGN IMPLEMENTATION. FHWA FINAL APPROVAL PENDING.

APPROVED

Gordon S. MacCallum
DIRECTOR OF ENGINEERING

David A. Ross
TRAFFIC AND SAFETY ENGINEER

TRAFFIC CONTROL SIGNALS GENERAL NOTES & DETAILS

/traf/std/std171a.dgn - std171a.1

VERMONT AGENCY OF TRANSPORTATION

STANDARD
E-171A

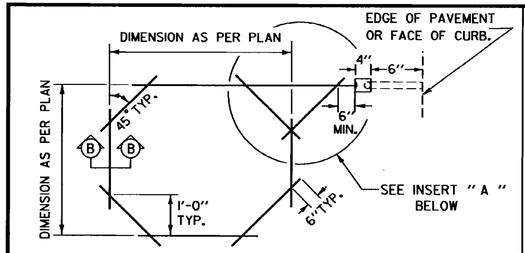

VEHICLE DETECTOR LOOP LAYOUT DETAIL

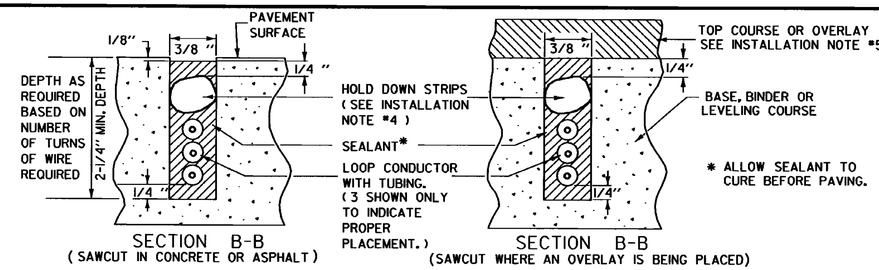

LOOP SAWCUT DETAIL

LONG LOOPS

LOOP INDUCTANCE DESIGN TABLE

LENGTH OF LOOP (FEET)	LOOP INDUCTANCE (MICROHENRIES) WIDTH OF LOOP 6 FEET 1 TURN	6 FEET 2 TURNS	6 FEET 3 TURNS	8 FEET 1 TURN	8 FEET 2 TURNS	8 FEET 3 TURNS
10	-	98	206	-	104	218
15	-	138	291	-	144	303
20	-	178	376	-	184	388
25	-	218	461	-	224	473
30	-	258	546	-	264	558
35	-	298	-	-	304	-
40	106	338	-	108	344	-
45	118	378	-	120	384	-
50	131	418	-	133	424	-
55	143	458	-	145	464	-
60	156	498	-	158	504	-
65	168	538	-	170	544	-
70	181	578	-	183	584	-

NOTE:

1. THE ABOVE INDUCTANCES ARE ESTIMATED VALUES USING THE FOLLOWING EQUATIONS.

   1 TURN = (PERIMETER X 0.5) + (LOOP LENGTH X 1.5)
   2 TURN = (PERIMETER X 1.5) + (LOOP LENGTH X 5.0)
   3 TURN = (PERIMETER X 3.0) + (LOOP LENGTH X 11.0)

2. SEE NOTES #1 & 3 UNDER THE RECTANGULAR LOOP TABLE.

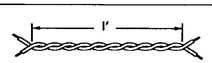

MINIMUM 5 TWISTS PER FOOT.
BOTH WIRES SHALL BE TWISTED

WIRE TWIST DETAIL

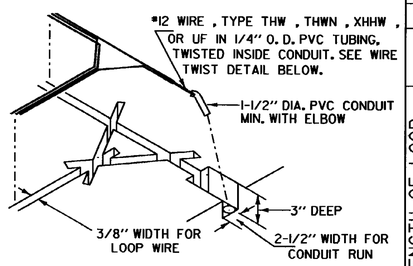

INSERT "A" LAYOUT DETAIL

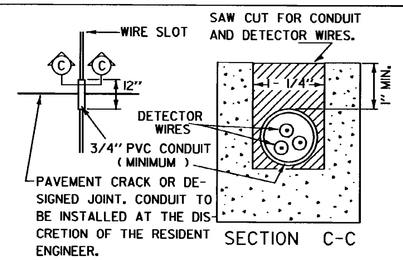

DETECTOR WIRE ACROSS CRACKS OR JOINTS

RECTANGULAR LOOPS

LOOP INDUCTANCE DESIGN TABLE

LENGTH OF LOOP (FEET)	WIDTH OF LOOP 4 FEET	6 FEET	8 FEET	10 FEET	LOOP PERIMETER (FT.)	LOOP INDUCTANCE (MICROHENRIES) 2 TURNS K=.42	3 TURNS K=.38	4 TURNS K=.36	5 TURNS K=.33
	8	6	-	-	24	40	82	138	198
	10	8	-	-	28	47	96	161	231
	12	10	8	-	32	54	109	184	264
	14	12	10	-	36	60	123	207	297
	16	14	12	10	40	67	137	230	330
	18	16	14	12	44	74	151	254	367
	20	18	16	14	48	81	164	277	396
	22	20	18	16	52	87	178	300	429
	24	22	20	18	56	94	192	323	462
	26	24	22	20	60	101	205	346	495
	28	26	24	22	64	108	219	369	-
	30	28	26	24	68	114	232	392	-
	32	30	28	26	72	121	246	415	-
	34	32	30	28	76	128	260	438	-
	37	35	33	31	82	138	280	472	-
	42	40	38	36	92	155	315	530	-

NOTE:

1. TO THE ABOVE LOOP INDUCTANCES, ADD 25 MICROHENRIES FOR EACH 100 FEET OF LEAD-IN CABLE FROM THE PAVEMENT LOOP TO THE CONTROLLER CABINET. LOOP LEAD-IN LENGTH SHALL NOT EXCEED 750 FEET.

2. THE FORMULA USED FOR THE TABLE ABOVE IS INDUCTANCE (L) = KPN^2.
   WHERE $K = \frac{5}{10+N}$, N = NO. OF TURNS, P = LOOP PERIMETER

3. WHEN LOOPS ARE CONNECTED IN SERIES (PREFERRED FOR SMALL LOOPS), THE TOTAL INDUCTANCE BECOMES THE SUM OF ALL INDUCTANCES. WHEN LOOPS ARE CONNECTED IN PARALLEL (PREFERRED FOR LONG LOOPS), THE COMBINED INDUCTANCE CAN BE CALCULATED FROM THE FOLLOWING EQUATION.

$$L_P = \left[\frac{1}{\frac{1}{L_1}+\frac{1}{L_2}+\frac{1}{L_3}\ldots\ldots}\right] + \text{LOOP LEAD-IN INDUCTANCES.}$$

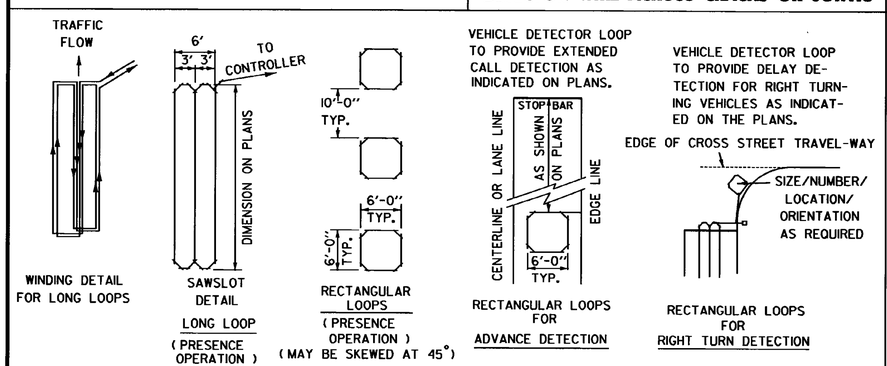

TYPICAL LOOP DESIGNS

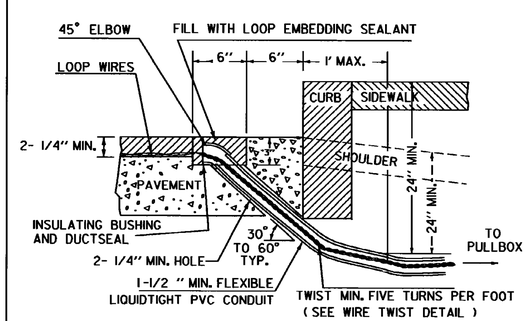

CONDUIT DETAIL FOR LOOP LEAD-IN TO CONTROLLER / PULL BOX

GENERAL NOTES

1. THE TERM "VEHICLE DETECTOR LOOP" SHALL REFER TO THE SENSOR EQUIPMENT EMBEDDED IN THE PAVEMENT WHICH SENSES VEHICLE PASSAGE OR PRESENCE. THE TERM "CABINET AMPLIFIER" SHALL REFER TO THE ELECTRICAL OR ELECTRONIC DEVICE LOCATED IN THE CONTROLLER CABINET WHICH RESPONDS DIRECTLY TO A VEHICLE ACTUATION AND INTERFACES WITH THE CONTROLLER.
2. WHEN THE DISTANCE FROM THE SAWCUT TO THE CONTROLLER EXCEEDS 25 FEET, SHIELDED CABLE SHALL BE USED TO EXTEND LOOP LEAD-INS FROM A JUNCTION BOX, PULLBOX OR POLE BASE TO THE CABINET. IT SHALL MEET THE REQUIREMENTS OF ISMA SPEC. NO. 50-2.
3. VEHICLE DETECTOR LOOP SHALL BE INSTALLED IN SUCH A WAY AS TO MAXIMIZE SENSITIVITY AND BE CAPABLE OF DETECTING MOTORCYCLES AND BICYCLES, WHILE ELIMINATING FALSE CALLS FROM VEHICLES IN ADJACENT LANES. LOOPS SHOULD BE DESIGNED SO THAT THE TOTAL INDUCTANCE [LOOP(S) PLUS LEAD-IN(S)] AT THE AMPLIFIER IS BETWEEN 100 AND 450 MICROHENRIES (200-300 PREFERRED). FOR SINGLE LOOPS, THE LOOP INDUCTANCE SHOULD BE AT LEAST TWICE THAT OF THE LEAD-IN. FOR MULTIPLE LOOPS, THE INDUCTANCE ON THE STREET SIDE OF THE SPLICE SHOULD BE AT LEAST TWICE THAT ON THE CONTROLLER SIDE.
4. THE LOOPS SHALL BE CENTERED IN THEIR RESPECTIVE LANES, UNLESS OTHERWISE NOTED.
5. ALL LOOPS SHALL OPERATE IN THE PRESENCE MODE WITH THE CONTROLLER SET TO LOCKING MEMORY FOR "LEFT-ONLY" OR "THRU-ONLY" LANES. ALL OTHER LANES SHALL UTILIZE NON-LOCKING MEMORY, UNLESS OTHERWISE NOTED.
6. ALL LOOPS IN "RIGHT TURN ONLY" LANES OR LOOP PLACED TO DETECT ONLY RIGHT TURNING VEHICLES SHALL HAVE DELAYED CALL LOOP AMPLIFIERS, UNLESS OTHERWISE NOTED.
7. ALL LOOP DETECTORS SHALL BE OF A TYPE THAT FAIL IN THE "ON" MODE.
8. ALL LOOP AND LEAD-IN WIRE SHALL BE #12 AWG. THE RESISTANCE OF #12 AWG IS 1.62 OHMS / 1000' AT 77° F.

INSTALLATION NOTES

1. ALL SPLICES SHALL BE MADE IN PULLBOXES, JUNCTION BOXES, OR POLE BASES. ALL SPLICES SHALL BE SOLDERED, USING ROSIN CORE SOLDER, AND THEN BE FULLY SEALED BY THE APPLICATION OF DUAL-WALL, HEAT-SHRINKABLE TUBING, UNLESS OTHERWISE NOTED. A MINIMUM OF 3' OF SLACK SHALL BE LEFT IN EACH CABLE IN EACH BOX OR BASE.
2. ALL LOOP WIRES SHALL BE INSTALLED IN PVC TUBING. THE TUBING ENDS SHALL BE SEALED USING LOOP SEALANT PRIOR TO INSTALLATION IN THE SAWCUT.
3. BEFORE LAYING IN THE LOOP WIRE, A ONE-QUARTER INCH BEAD OF SEALANT SHALL BE PLACED IN THE SAWCUT AND ALLOWED TO SET UP SUFFICIENTLY TO GIVE THE WIRE SOME SUPPORT. EACH WIRE SHALL BE EASED INTO THE SAWCUT WITH A BLUNT WOODEN STICK.
4. THE LOOP WIRES SHALL BE HELD IN PLACE DURING INSTALLATION BY SHORT STRIPS OF POLYETHYLENE FOAM SEALANT BACKERS. THE STRIPS SHALL BE ABOUT 2" LONG AND PLACED EVERY 2 FEET. THEY ARE TO REMAIN IN PLACE WHEN THE SLOT IS SEALED.
5. VEHICLE DETECTOR LOOPS SHALL BE PLACED IN SAWCUTS IN THE PAVEMENT COURSE IMMEDIATELY BELOW THE WEARING SURFACE AND PAVED OVER WHENEVER POSSIBLE. IF THE WEARING SURFACE IS MORE THAN 1-3/4" IN DEPTH, THE SAWCUT SHALL BE MADE AFTER THE WEARING SURFACE IS PLACED. IF PAVING IS NOT PART OF THE PROJECT, THE SAWCUT SHALL BE MADE IN EXISTING PAVEMENT.
6. WHEN LOOP WIRES ARE PLACED BELOW THE WEARING SURFACE, THE SEALANT SHALL BE PROPERLY CURED BEFORE THE FINAL PAVEMENT IS PLACED.
7. LOOP LEAD-INS FROM ADJACENT LOOPS ACTUATING DIFFERENT PHASES SHALL BE IN SEPARATE SAWCUTS AND CONDUITS TO THE PULLBOX OR POLE BASE.
8. LOOP LEAD-INS SHALL BE KEPT AT LEAST ONE FOOT AWAY FROM POWER WIRING, WHENEVER POSSIBLE.
9. ALL ELECTRICAL WORK AND MATERIALS SHALL MEET THE REQUIREMENTS OF THE NATIONAL ELECTRIC CODE.
10. LOOP WIRES FROM EACH LOOP AND/OR APPROACH SHALL BE COLOR CODED OR OTHERWISE IDENTIFIED AT EACH PULLBOX OR JUNCTION BOX, IN THE POLE BASE(S) AND AT THE TERMINAL BOARD IN THE CONTROLLER CABINET. FOLLOWING INSTALLATION, THE CONTRACTOR SHALL SUPPLY 2 COPIES OF A SCHEMATIC SHOWING THE FOLLOWING INFORMATION.
    1. NUMBER OF TURNS.
    2. DIMENSIONS FOR EACH LOOP.
    3. LOOP LEAD-IN ROUTING FROM THE SAWCUT TO THE CONTROLLER.
    4. TYPE OF CONNECTIONS AT EACH SPLICE (SERIES, PARALLEL OR SERIES-PARALLEL).

    ONE COPY SHALL BE LEFT IN THE CONTROLLER CABINET AND THE OTHER GIVEN TO THE TRAFFIC SHOP OR LOCAL OFFICIAL RESPONSIBLE FOR THE SIGNAL MAINTENANCE.

LOOP TESTING

DURING INSTALLATION OF THE LOOPS, THE CONTRACTOR SHALL MEASURE THE LOOP INDUCTANCE, LEAKAGE TO GROUND AND LOOP RESISTANCE IN THE PRESENCE OF THE RESIDENT ENGINEER. THE CONTRACTOR SHALL PROVIDE THE APPROPRIATE EQUIPMENT. THE INSTALLATION SHALL BE CONSIDERED ACCEPTABLE IF:

1. THE INDUCTANCE READING IS WITHIN 10% ± OF THE CALCULATED VALUE.
2. THE INSULATION TEST (LEAKAGE TO GROUND) IS ABOVE 5 MEGOHMS FOR EXISTING LOOPS AND 100 MEGOHMS FOR NEW LOOPS USING A 500 VOLT DC INPUT.
3. THE LOOP RESISTANCE IS WITHIN 25% ± OF THE CALCULATED VALUE.

IF THE READINGS FALL OUTSIDE THE ABOVE RANGES, CORRECTIVE MEASURES MAY BE REQUIRED AND THE ENGINEER SHALL NOTIFY THE TRAFFIC AND SAFETY DIVISION. THE COST OF TESTING THE LOOPS AND ANY NECESSARY CORRECTIONS SHALL BE SUBSIDIARY TO THE ITEM "VEHICLE DETECTOR LOOP". THE CALCULATED VALUES SHALL BE SHOWN ON THE PLANS. LOOP TESTING IS NOT REQUIRED FOR TEMPORARY LOOPS.

CONDUIT FILL DESIGN VALUES

AVAILABLE CONDUIT AREA: SIZE I.D.	SIZE O.D.	26 % FILL (IN²)
1"	1.315	0.23
1-1/4"	1.660	0.39
1-1/2"	1.900	0.53
2"	2.375	0.87
2-1/2"	2.875	1.24
3"	3.500	1.92
3-1/2"	4.000	2.57
4"	4.500	3.31

CONDUCTOR SIZE TABLE: NUMBER OF CONDUCTORS	CROSS SECTIONAL AREA (IN²) GAUGE #14	#12	#10	#8	#6
1	.021	.025	.031	.060	.082
2	.093	.129	CALCULATE AS REQUIRED		
5	.142	.200			
7	.170	.260			
9	.297	.413			
12	.317	.436			
16	.402	.601			
19	.425	.658			

OTHER STDS. REQUIRED NONE

REVISIONS AND CORRECTIONS

SEPT. 10, 1987 - DATE OF ORIGINAL ISSUE
NOV. 17 1993 - MAJOR NOTE & TABLE REVISIONS
AUG. 9, 1995 - REVISED INSTALLATION NOTES 5 & 6. TYP. LOOP DESIGN & MINOR CHANGES

APPROVED FOR THIS PROJECT AND/OR DESIGN IMPLEMENTATION. FHWA FINAL APPROVAL PENDING.

APPROVED

Gordon D. McArthur
DIRECTOR OF ENGINEERING

David A. Ross
TRAFFIC AND SAFETY ENGINEER

VEHICLE DETECTOR LOOP DETAILS

/traf/std/stdel72.dgn - stdel72.1

VERMONT AGENCY OF TRANSPORTATION

STANDARD E-172

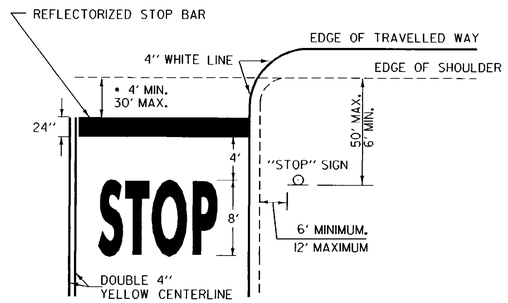

• THE "DESIRED STOPPING POINT" IS THE LOCATION BASED ON SITE CONDITIONS THAT BEST ALLOWS THE STOPPED VEHICLE TO VIEW THE APPROACHING TRAFFIC.

STOP BAR LAYOUT

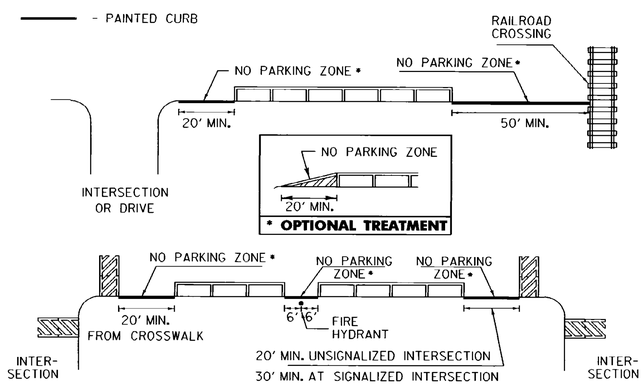

NO PARKING LAYOUT DETAILS

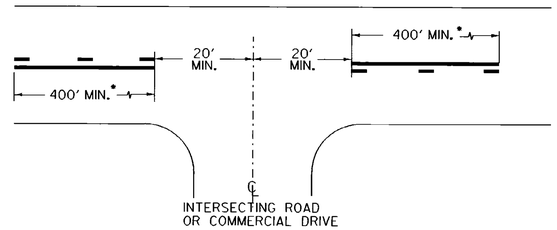

• THE SOLID LINE SHALL BE PAIRED WITH EITHER A SOLID OR DASHED LINE DEPENDING ON SIGHT DISTANCE AVAILABILITY IN THE OPPOSING DIRECTION. ADJUSTMENTS TO THE 40 FOOT CENTERLINE OPENING MAY BE MADE TO ACCOMMODATE SKEWED INTERSECTIONS.

CENTERLINE BREAKES:

A. AT ALL STATE HIGHWAYS AND TOWN HIGHWAYS, INCLUDING CLASS 4 TH'S. THAT HAVE STOP AND LEGAL LOAD LIMIT SIGNS INSTALLED

B. COMMERCIAL DRIVES:

1. WHERE A SEPERATE TURN LANE EXISTS ON THE MAIN LINE (LT. OR RT.)
2. SIGNIFICANT TRAFFIC VOLUMES EXISTS.
3. IF MOTORISTS NEED ASSISTANCE TO DEFINE ENTRANCE POINTS.

CENTERLINE LAYOUT

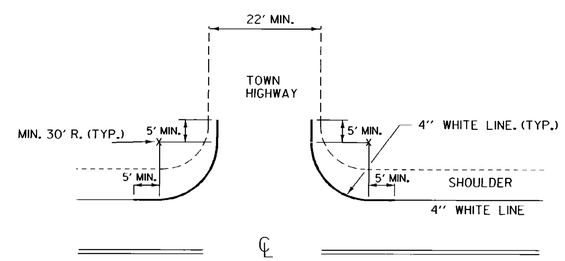

EDGELINES SHALL BE APPLIED TO ALL STATE HIGHWAYS AND SHOULD BE MAINTAINED AT A CONSTANT DISTANCE FROM THE CENTERLINE UNLESS PAVEMENT WIDTH INCREASES TO ALLOW WIDER LANES.

APPLY EDGELINE AS DETAILED ON ALL PAVED CLASS 1 & CLASS 2 TOWN HIGHWAYS AND ANY CLASS 3 TOWN HIGHWAY 22 FEET OR MORE IN WIDTH.

IF MIN. 30 FOOT RADIUS CANNOT BE OBTAINED, OR THE TOWN HIGHWAY IS NOT PAVED, BREAK THE EDGELINE USING AN 80 FOOT GAP AT INTERSECTION.

EDGELINE LAYOUTS

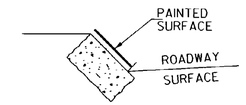

GRANITE SLOPE EDGING

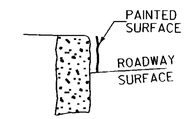

VERTICAL GRANITE CURB

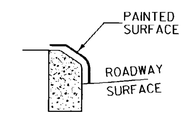

TYPE A (CONCRETE)

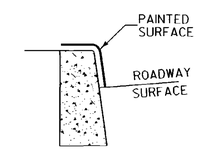

TYPE B (CONCRETE)

PAINTED CURB

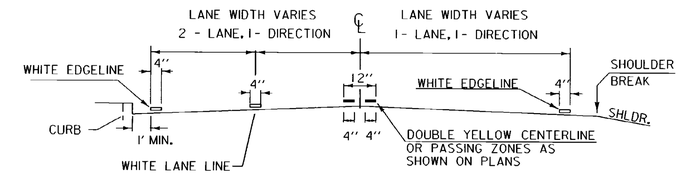

PAVEMENT MARKING PLACEMENT DETAIL

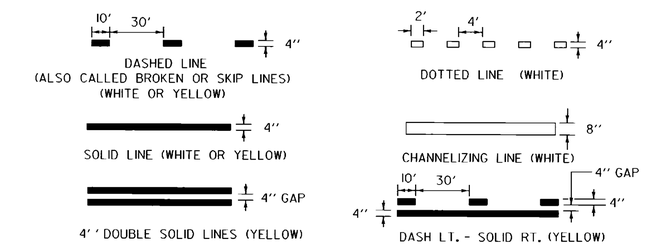

PAVEMENT MARKING LINE DETAILS

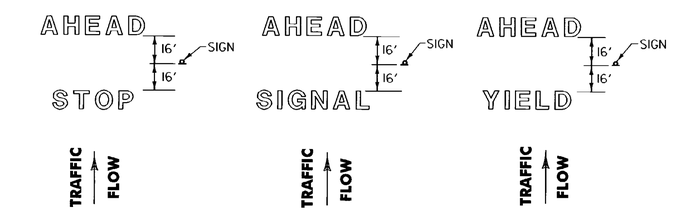

LETTER IN WORD MARKING SPACING DETAIL

NOTE: SINGLE WORDS CENTERED ON SIGN ie: SCHOOL OR YIELD

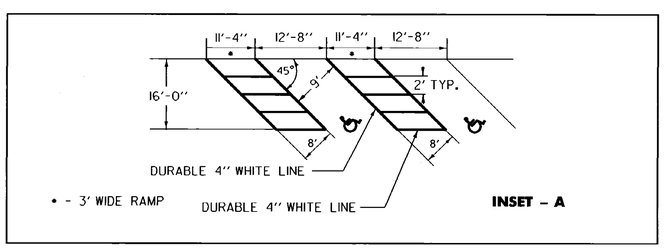

INSET - A

NOTE:

SEE STANDARD SHEET E-191 FOR HANDICAP SYMBOL POSITIONING AND DETAIL.

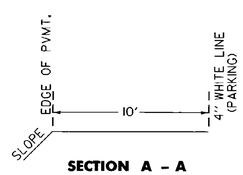

SECTION A - A

TRUCK PARKING DETAIL

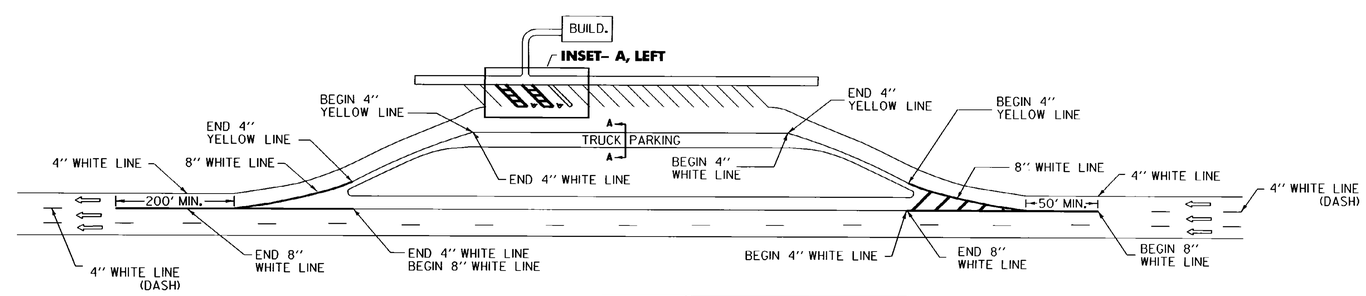

REST AREA PARKING DETAILS

THIS SHEET IS NOT TO SCALE

OTHER STDS. E - 191, E - 192 REQUIRED

REVISIONS AND CORRECTIONS

AUG. 18, 1995 - DATE OF ORIGINAL ISSUE

APPROVED FOR THIS PROJECT AND/OR DESIGN IMPLEMENTATION. FHWA FINAL APPROVAL PENDING.

APPROVED

DIRECTOR OF ENGINEERING

TRAFFIC AND SAFETY ENGINEER

PAVEMENT MARKING DETAILS

/traf/std/stdel93.dgn/stdel93.i

VERMONT AGENCY OF TRANSPORTATION

STANDARD

E-193

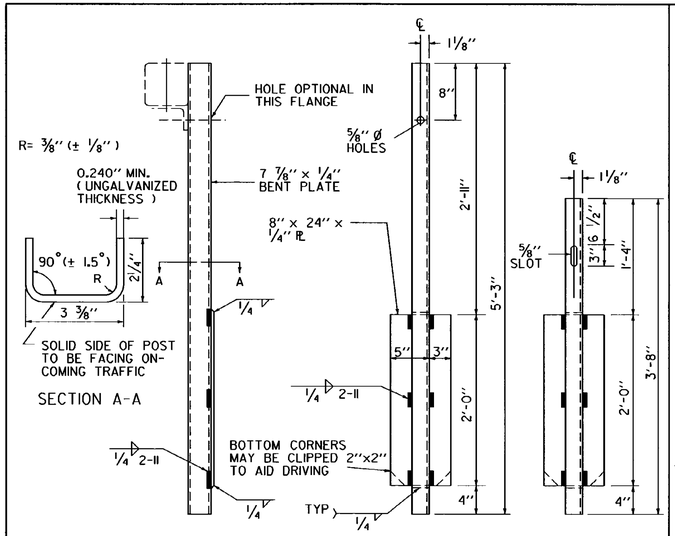

ALTERNATE POST (BENT PLATE)
(STD. HM-TF-13 P-49-76)

END POST DETAIL

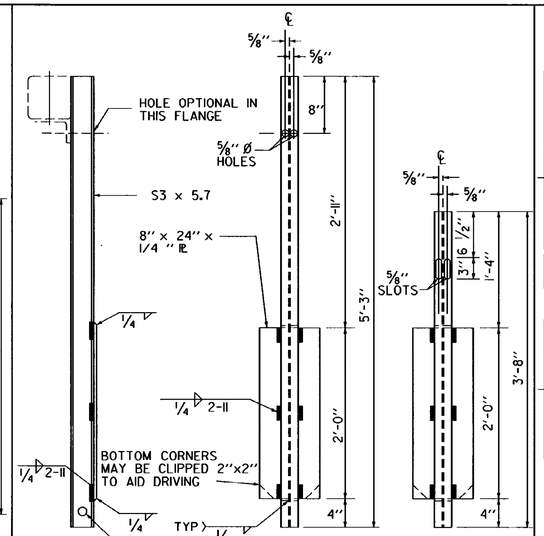

S3 X 5.7 POST
(STD. HM-TF-13 P-4-76)

END POST DETAIL

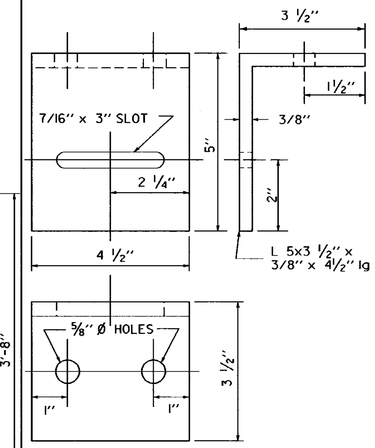

RAIL SUPPORT ANGLE
(STD. HM-TF-13 P-5-76)

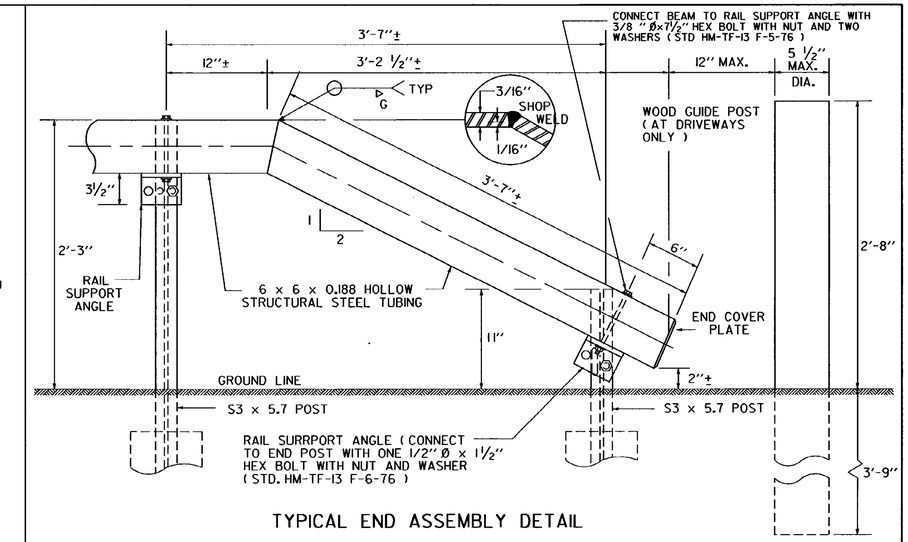

TYPICAL END ASSEMBLY DETAIL

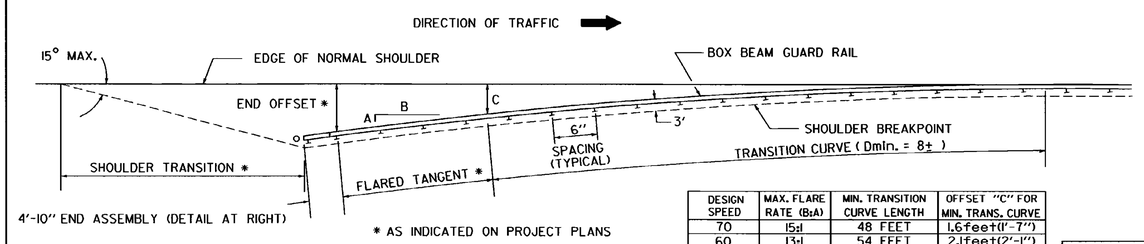

* AS INDICATED ON PROJECT PLANS

DESIGN SPEED	MAX. FLARE RATE (B:A)	MIN. TRANSITION CURVE LENGTH	OFFSET "C" FOR MIN. TRANS. CURVE
70	15:1	48 FEET	1.6feet(1'-7")
60	13:1	54 FEET	2.1feet(2'-1")
50	11:1	66 FEET	3.0feet(3'-0")
40	9:1	78 FEET	4.3feet(4'-4")

PLAN OF FLARED APPROACH

GENERAL NOTES

1. THE DESIRED APPROACH END OFFSET SHOULD BE AT LEAST 8' FROM THE EDGE OF NORMAL SHOULDER WHERE SPACE PERMITS; IN SPECIAL CASES, THE END OFFSET MAY BE REDUCED. IN NO CASE, HOWEVER, WILL THE END OFFSET BE LESS THAN 4'.
2. POST SPACING WILL BE 6'-0" C-C, EXCEPT IN THE VICINITY OF THE JUNCTION OF BOX BEAM GUARD RIAL AND BRIDGE RAILING, AND AT OTHER LOCATONS INDICATED ON THE PLANS. AT BRIDGE APPROACHES, THE 50' SECTION ADJACENT TO THE BRIDGE RAILING WILL HAVE A POST SPACING OF 4'-0" C-C.
3. FOR MATERIAL REQUIREMENTS AND CONSTRUCTION DETAILS SEE SPECIFICATIONS FOR BOX BEAM GUARD RAIL.
4. RAIL ALIGNMENT TO BE STRAIGHT AT SPLICES. NO LATERAL BENDS PERMITTED WITHIN THE SPLICE. THIS DOES NOT PRECLUDE THE SHOP FABRICATION OF BENT SPLICES.
5. THE LINE OF BOX BEAM GUARD RAIL WHEN COMPLETED SHALL PRESENT A SMOOTH AND PLEASING GRADE LINE IN BOTH HORIZONTAL AND VERTICAL PLANES.
6. ALL POSTS IN A GIVEN RUN TO BE OF THE SAME TYPE.

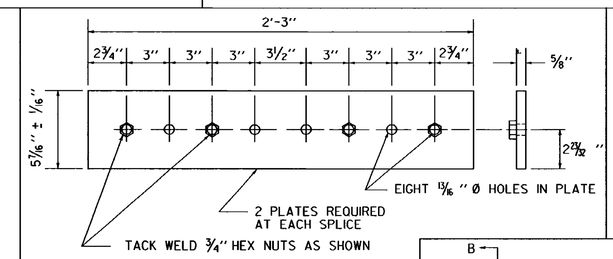

SPLICE PLATE DETAIL
(STD. HM-TF-13 RE-11-73)

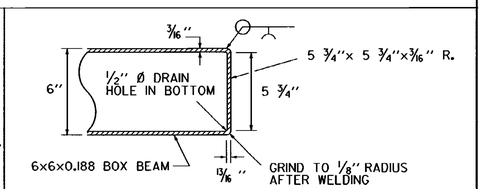

END COVER PLATE DETAIL

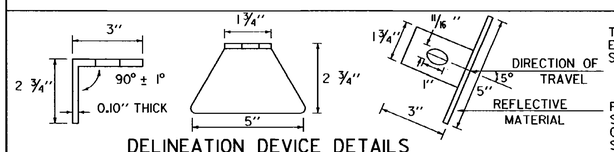

DELINEATION DEVICE DETAILS

THIS REFLECTORIZED ALUMINUM DELINEATION DEVICE IS TO BE ERECTED EVERY 36 FEET, AT SPLICES. DELINEATOR SHALL MEET SPECIFICAITON REQUIRMENTS FOR ASTM B209 ALLOY 5052-H32.

REFLECTIVE MATERIAL SHALL MEET THE REQUIREMENTS OF SUBSECTION 750.09 AND SHALL BE OF ENCAPSULATED LENS SILVER OR AMBER. AMBER IS TO BE INSTALLED ON THE LEFT OR MEDIAN SIDE OF INTERSTATE ROADWAYS OR RAMPS.

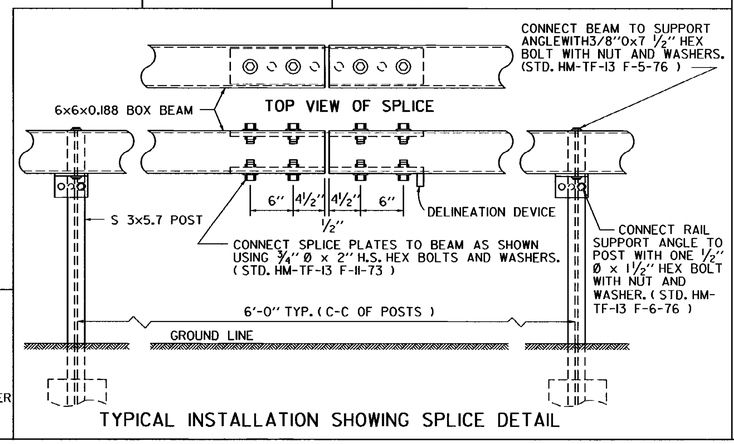

TYPICAL INSTALLATION SHOWING SPLICE DETAIL

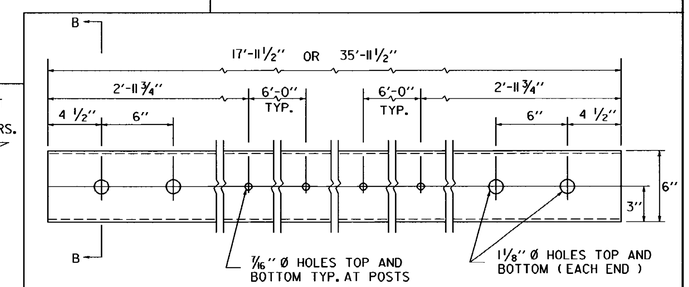

NOTES:

1. RAIL SECTIONS FOR TANGENT RUNS WILL BE EITHER 17'-11 1/2" OR 35'-11 1/2" IN LENGTH.
2. ON CURVES, CHORD LENGTHS WILL BE NO LESS THAN 12 FEET.
3. FOR CURVES GREATER THAN 8°, RAIL SECTIONS SHALL BE SHOPFORMED TO THE REQUIRED CURVATURE. PAYMENT OF SUCH SHOP WORK WILL BE CONSIDERED TO BE SUBSIDIARY TO BOX BEAM GUARD RAIL.
4. WELD OR GALVANIZING PROTRUSIONS WILL NOT BE PERMITTED ON TOP OR BOTTOM INSIDE WALLS IN SPLICE AREA.

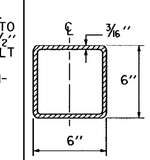

SECTION B-B

6x6x0.188 BOX BEAM RAIL ELEMENT
(STD. HM-TF-13 RE-10-76)

REVISIONS AND CORRECTIONS

OCT. 17, 1979- ORIGINAL APPROVAL DATE
JULY 23, 1980- CHANGED DIAMETER OF GUIDE POST
DEC. 16, 1980- INCREASED SHOULDER WIDENING FOR GUARD RAIL
JUNE 17, 1984- DELINEATOR DEVICE ADDED
DEC. 21, 1984- HEIGHT OF RAIL LOWERED FROM 2'-6" TO 2'-3"
OCT. 31, 1985- REVISED TO CONFORM TO 1986 SPECIFICATIONS
JUNE 1, 1994 - REISSUED, WITHOUT CHANGE, UNDER NEW SIGNATURES.

APPROVED

APPROVED FOR THIS PROJECT AND/OR DESIGN IMPLEMENTATION. FHWA FINAL APPROVAL PENDING.

Gordon B. MacArthur, P.E.
DIRECTOR OF ENGINEERING

Robert M. Murphy, P.E.
DESIGN ENGINEER

BOX BEAM GUARD RAIL

VERMONT AGENCY OF TRANSPORTATION

STANDARD
G-1b

NOTES

1. ONLY LIGHTWEIGHT MAILBOXES MADE OF LIGHT SHEET METAL OR PLASTIC SHALL BE USED. MAILBOXES SHALL MEET REQUIREMENTS AND APPROVAL OF THE U.S. POSTAL SERVICE.
2. AN ALTERNATE MAILBOX SUPPORT STRUCTURE DESIGN AND CONSTRUCTION MAY BE USED AS LONG AS PROVEN CRASHWORTHY AND MEETS GUIDELINES AS SET OUT IN AASHTO'S "GUIDE FOR ERECTING MAILBOXES ON HIGHWAYS". SUPPORT STRUCTURE SHALL ALSO MEET REQUIREMENTS OF THE U.S. POSTAL SERVICE.
3. MAILBOX TURNOUT SHALL MEET B-17 STANDARD AS SET OUT IN "STATE OF VERMONT AGENCY OF TRANSPORTATION DESIGN STANDARDS FOR ROAD AND BRIDGE CONSTRUCTION".
4. IF THE STANDARD TURNOUT OFFSET CANNOT BE ATTAINED DUE TO RIGHT-OF-WAY CONSTRAINTS OR OTHER REASONS THE TURNOUT SHALL BE MODIFIED AS DIRECTED BY THE ENGINEER.

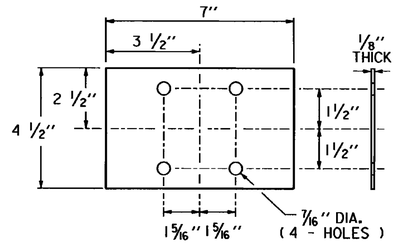

ANTI-TWIST DEVICE DETAIL FOR METAL PIPE

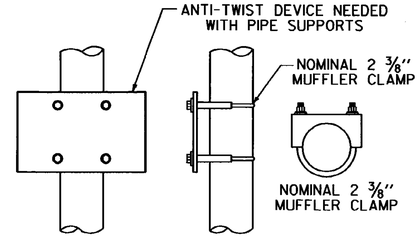

ANTI-TWIST DEVICE ASSEMBLY FOR METAL PIPES (USED FOR SINGLE AND MULTIPLE INSTALLATIONS)

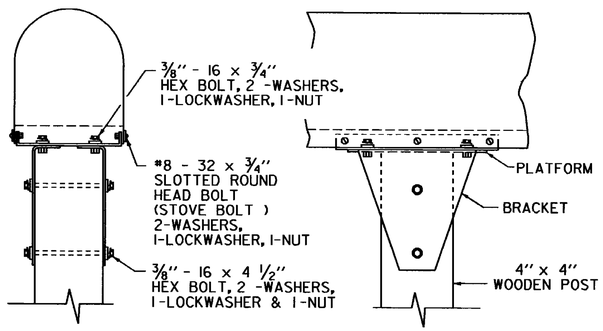

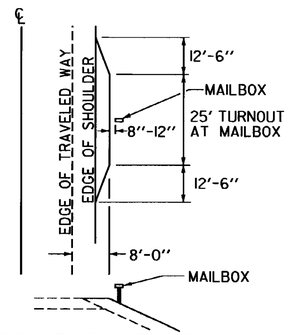

TURNOUT AT MAILBOX NOT NECESSARY IF SHOULDER WIDTH IS 8'-0" OR GREATER.

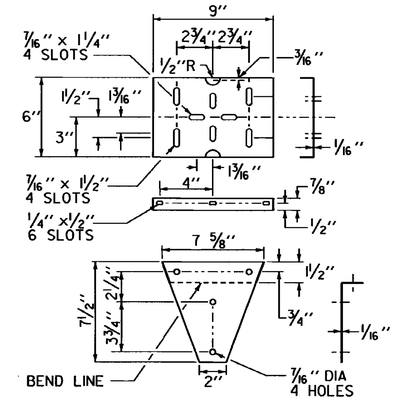

SINGLE MAILBOX SUPPORT

PLATFORM AND BRACKET DETAIL FOR METAL OR WOOD POSTS (USED FOR SINGLE AND MULTIPLE BOXES)

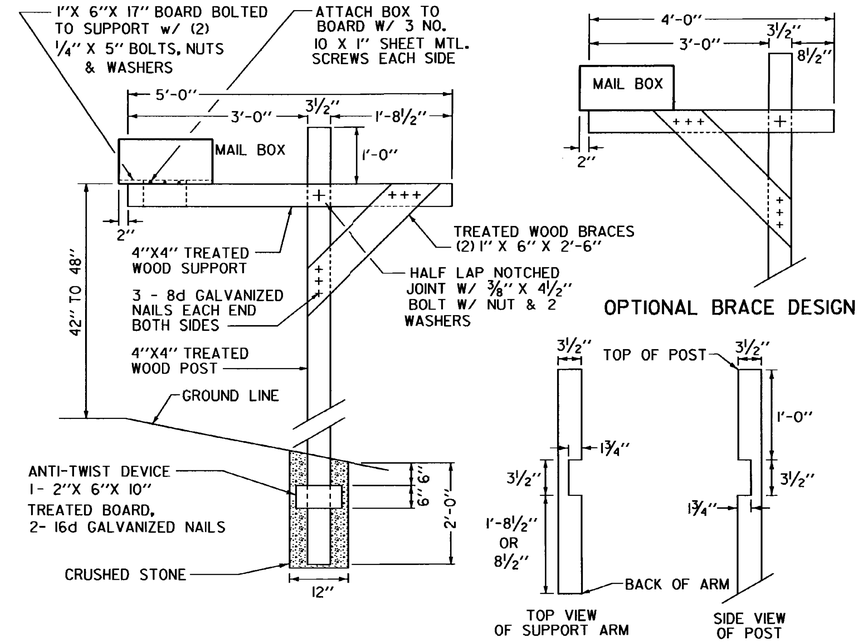

CANTILEVER TYPE MAILBOX SINGLE SUPPORT

NOTE: ALL WOOD DIMENSIONS ARE NOMINAL SIZE

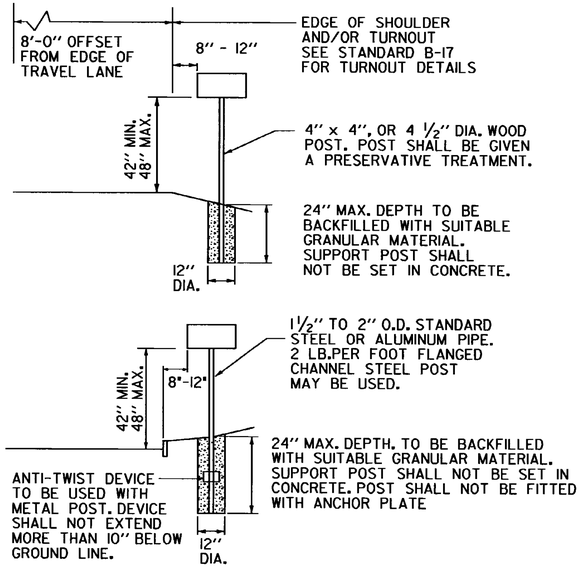

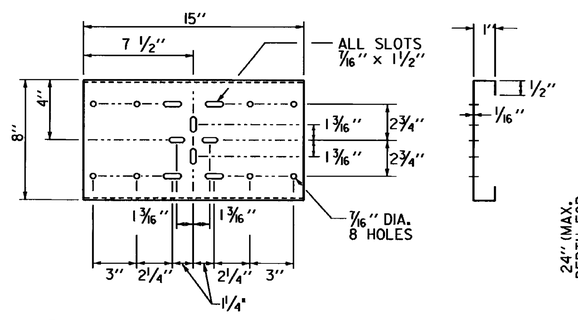

SHELF FOR TWO BOXES

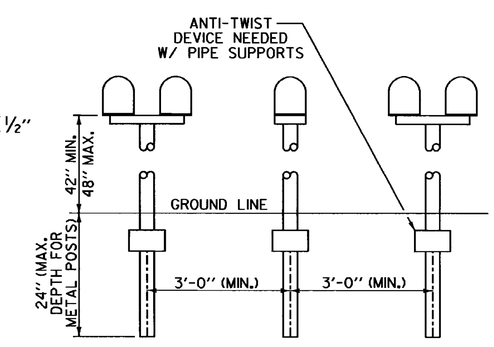

SPACING FOR MULTIPLE POST INSTALLATION

(APPLIES TO BOTH SINGLE AND MULTIPLE MAILBOX SUPPORTS)

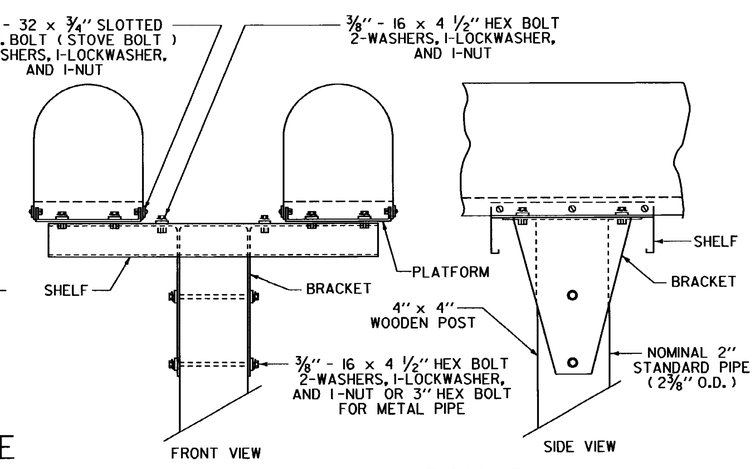

MULTIPLE MAILBOX SUPPORT

REVISIONS AND CORRECTIONS	
AUGUST 7, 1995	ORIGINAL APPROVAL

APPROVED

APPROVED FOR THIS PROJECT AND/OR DESIGN IMPLEMENTATION. FHWA FINAL APPROVAL PENDING.

DIRECTOR OF ENGINEERING

DESIGN ENGINEER

MAILBOX SUPPORT DETAIL
(SINGLE AND MULTIPLE SUPPORT)

VERMONT AGENCY OF TRANSPORTATION

STANDARD

J-3

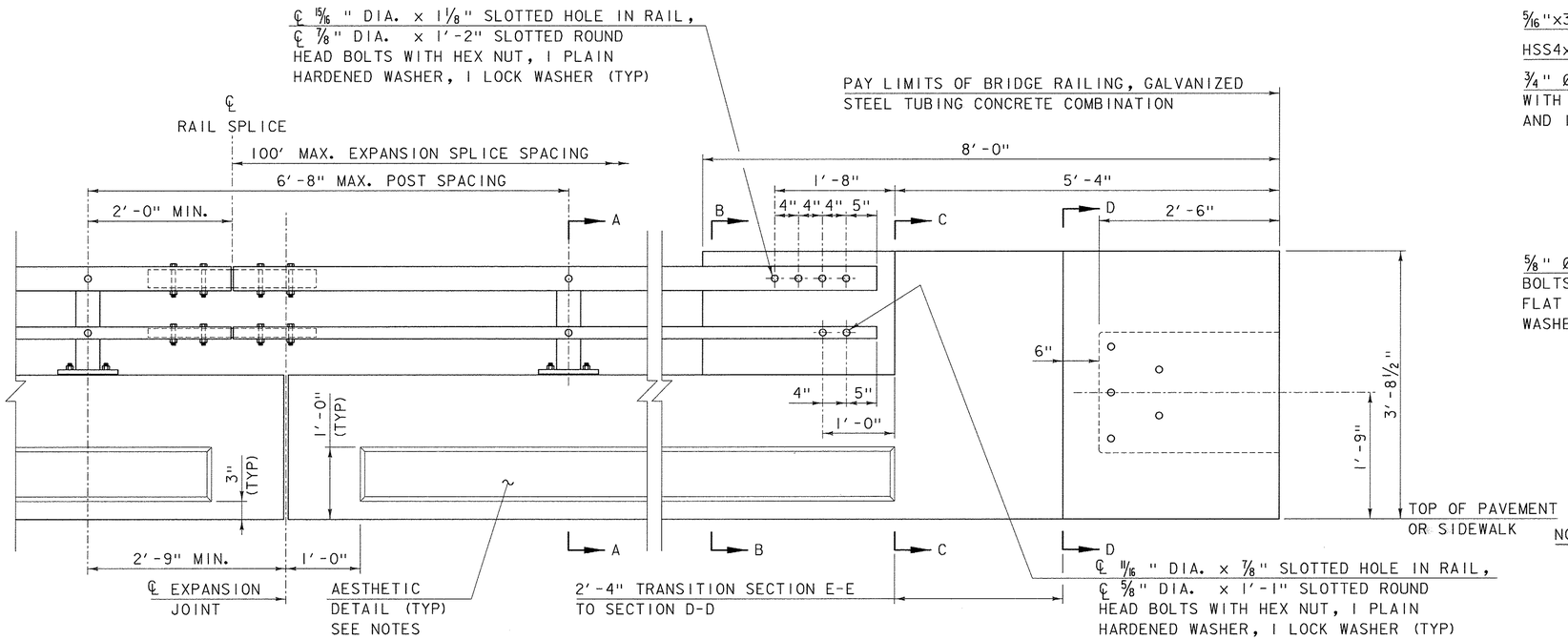

RAILING & END WALL APPROACH

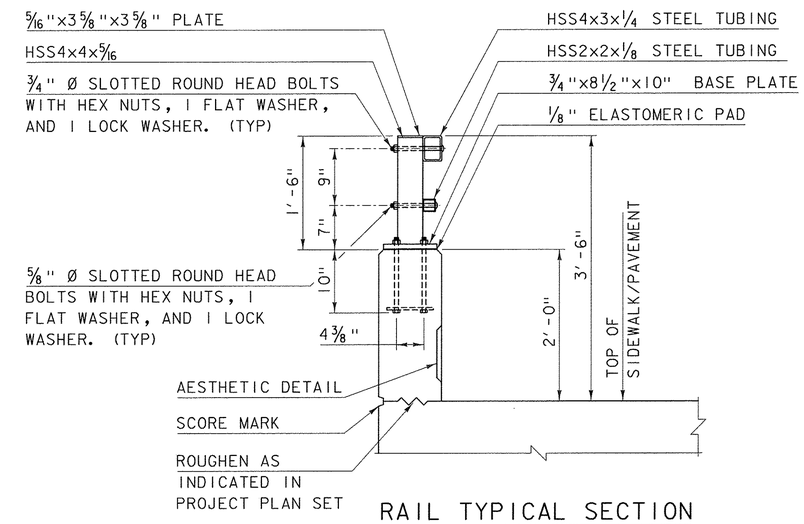

RAIL TYPICAL SECTION

NOTES:

1. ALL WORK AND MATERIALS SHALL CONFORM TO SECTION 525.
2. PRIOR TO GALVANIZING THE ASSEMBLED POST, GRIND ALL EDGES TO A MINIMUM RADIUS OF 1/16".
3. ALL POSTS SHALL BE SET NORMAL TO GRADE.
4. SECTIONS OF RAIL TUBE SHALL BE ATTACHED TO A MINIMUM OF TWO BRIDGE POSTS AND PREFERABLY TO AT LEAST 4 POSTS.
5. HOLES IN RAILS FOR TUBE ATTACHMENT MAY BE FIELD-DRILLED. HOLES SHALL BE COATED WITH AN APPROVED ZINC-RICH PAINT PRIOR TO INSTALLATION.
6. BOLTS SHALL BE TORQUED SNUG TIGHT (APPROXIMATELY 100 FT-LB).
7. RAIL TUBES SHALL BE ATTACHED USING 3/4" FULL DIAMETER BODY ASTM A 449 (TYPE I) ROUND HEAD BOLTS INSERTED THROUGH THE FACE OF THE TUBE.
8. SEE STANDARD DRAWING G-1 FOR DETAILS OF DELINEATORS. A DELINEATOR SHALL BE INSTALLED AT 30 FOOT SPACING OR THE NEAREST POST. WHITE IS TO BE INSTALLED ON THE DRIVER'S RIGHT. FOR ONE WAY BRIDGES, YELLOW IS TO BE INSTALLED ON THE DRIVER'S LEFT. PAYMENT FOR DELINEATORS SHALL BE INCIDENTAL TO OTHER ITEMS.
9. AESTHETIC TREATMENT TYPE SHALL BE APPLIED AS SPECIFIED IN THE CONTRACT PLANS. IF NONE IS SPECIFIED IT SHALL NOT BE USED. AESTHETIC TREATMENT DETAILED ON THIS SHEET MAY ALSO BE APPLIED ON THE FASCIA SIDE OF THE RAIL, IF SPECIFIED IN THE CONTRACT PLANS.
10. BRIDGE RAILING SHALL HAVE A RUBBED FINISH IN ACCORDANCE WITH SECTION 501.
11. THIS RAILING MEETS THE REQUIREMENTS FOR A NCHRP REPORT 350 TL-4 SERVICE LEVEL.

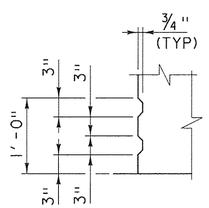

AESTHETIC DETAIL A

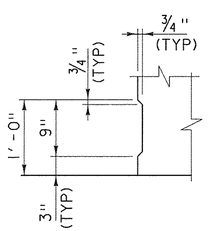

AESTHETIC DETAIL B

NOTE:
EF = EACH FACE
3" CLEAR, UNLESS OTHERWISE SPECIFIED ON THE PLANS.
2'-2" BAR LAP UNLESS OTHERWISE SPECIFIED ON THE PLANS.
*** MATCH SLOPE OF NEAREST TRANSVERSE STEEL

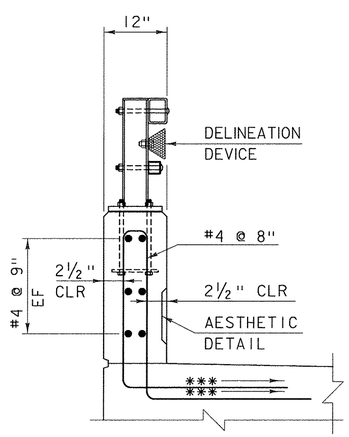

SECTION A-A

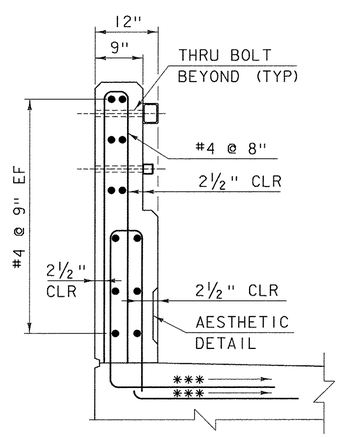

SECTION B-B

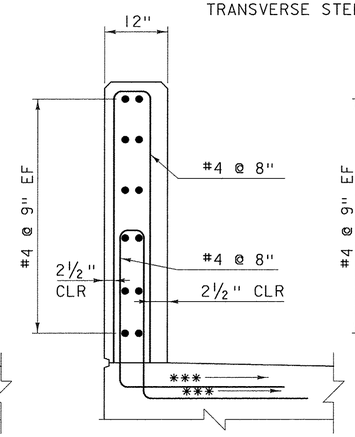

SECTION C-C

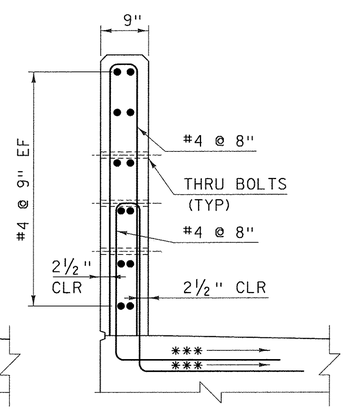

SECTION D-D

OTHER STDS. REQUIRED: G-1

REVISIONS AND CORRECTIONS

AUGUST 22, 2012 - ORIGINAL APPROVAL

APPROVED

Wm. Michael Hedges
STRUCTURES ENGINEER

Richard Tetreault
DIRECTOR OF PROGRAM DEVELOPMENT

Mark D. Richter
FEDERAL HIGHWAY ADMINISTRATION

BRIDGE RAILING, GALVANIZED STEEL TUBING / CONCRETE COMBINATION

VERMONT AGENCY OF TRANSPORTATION

STANDARD S-352A

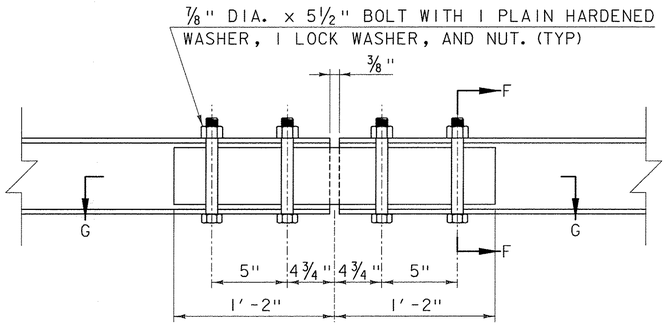

TOP RAIL FIXED SPLICE DETAIL

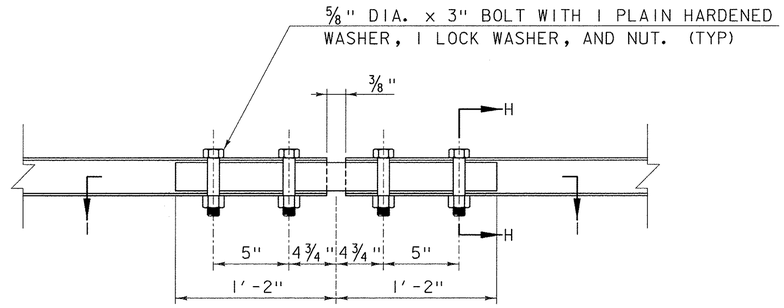

BOTTOM RAIL FIXED SPLICE DETAIL

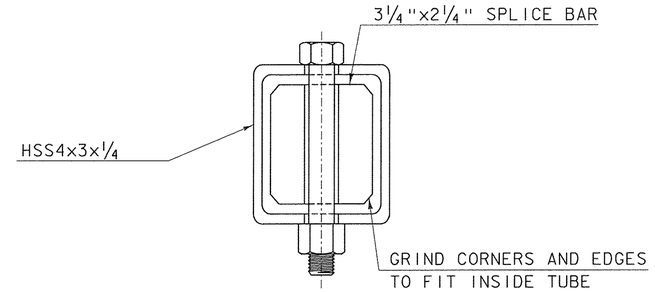

SECTION F-F

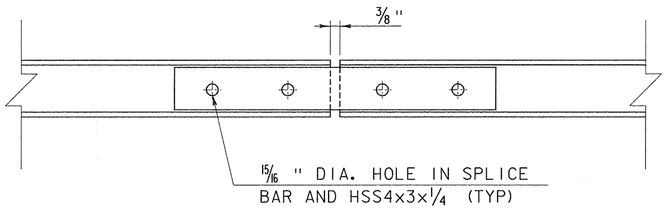

SECTION G-G

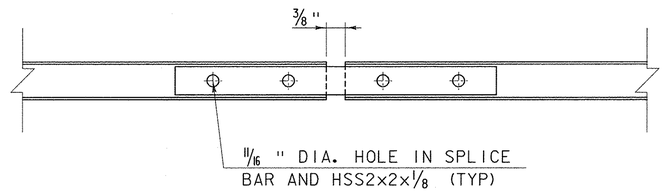

SECTION I-I

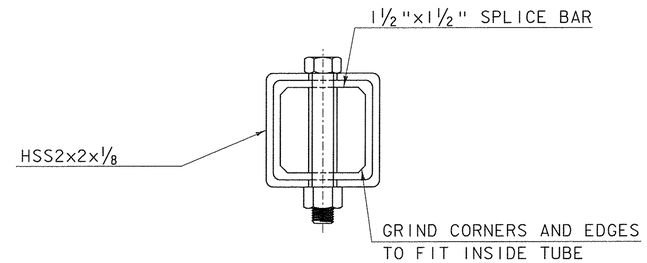

SECTION H-H

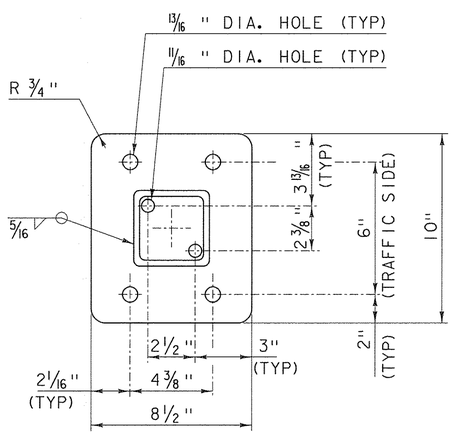

BASE PLATE

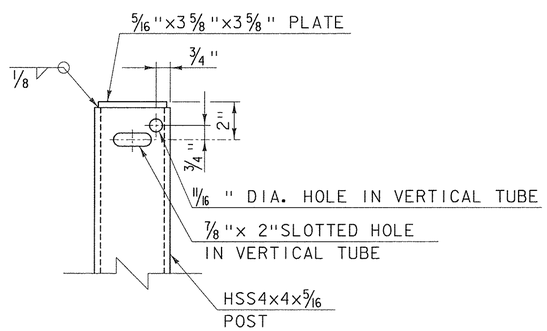

VERTICAL TUBE DETAIL
(FRONT VIEW)

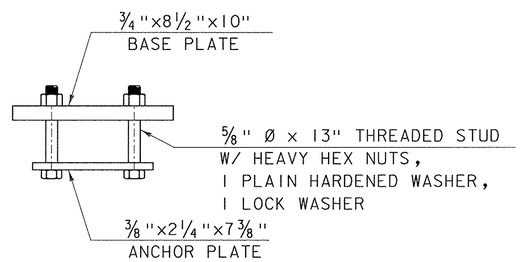

RAIL POST ANCHORAGE

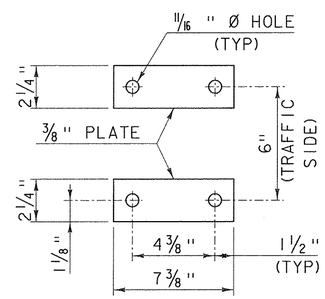

ANCHOR PLATES

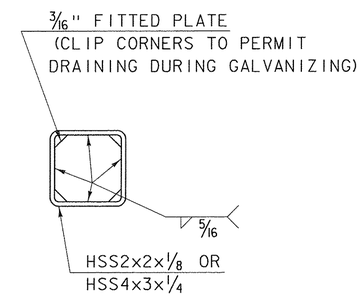

END OF RAIL DETAIL

OTHER STDS. REQUIRED: **G-1**

REVISIONS AND CORRECTIONS

AUGUST 22, 2012 - ORIGINAL APPROVAL

APPROVED

Wm. Michael Hedges
STRUCTURES ENGINEER

Richard Fetterman
DIRECTOR OF PROGRAM DEVELOPMENT

Mark D. Richter
FEDERAL HIGHWAY ADMINISTRATION

BRIDGE RAILING, GALVANIZED STEEL TUBING / CONCRETE COMBINATION

VERMONT AGENCY OF TRANSPORTATION

STANDARD
S-352B

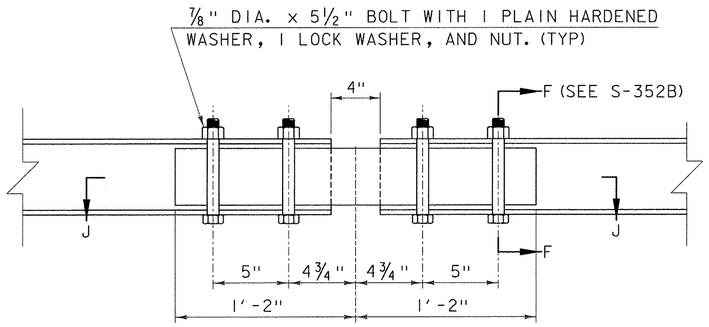

TOP RAIL EXPANSION SPLICE DETAIL

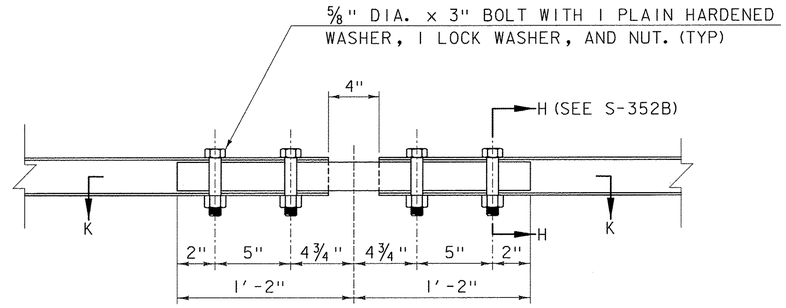

BOTTOM RAIL EXPANSION SPLICE DETAIL

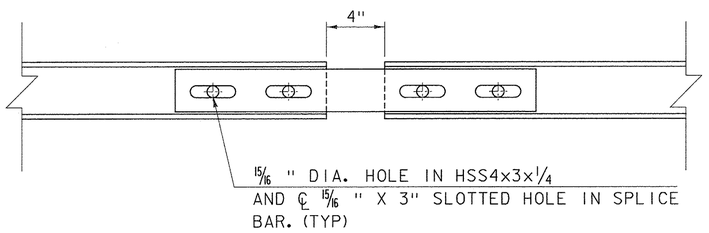

SECTION J-J

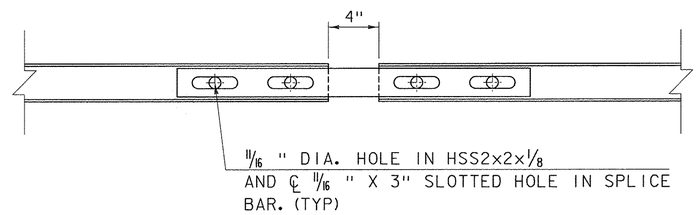

SECTION K-K

OTHER STDS. REQUIRED: G-1

REVISIONS AND CORRECTIONS

AUGUST 22, 2012 - ORIGINAL APPROVAL

APPROVED

STRUCTURES ENGINEER

DIRECTOR OF PROGRAM DEVELOPMENT

FEDERAL HIGHWAY ADMINISTRATION

BRIDGE RAILING, GALVANIZED STEEL TUBING / CONCRETE COMBINATION

VERMONT AGENCY OF TRANSPORTATION

STANDARD

S-352C

1. TRAFFIC CONTROL DEVICES NOT DETAILED IN THE VERMONT AGENCY OF TRANSPORTATION (VAOT) ''STANDARD DRAWINGS'' OR THE PROJECT PLANS SHALL BE IN ACCORDANCE WITH THE "MANUAL ON TRAFFIC CONTROL DEVICES" (MUTCD) AND THE ''STANDARD HIGHWAY SIGNS AND MARKINGS'' BOOK (SHSM) PUBLISHED BY THE FEDERAL HIGHWAY ADMINISTRATION (FHWA).

2. CONSTRUCTION SIGNS SHALL BE ERECTED BEFORE THE START OF ANY WORK AND SHALL BE COVERED UNTIL WORK COMMENCES, DURING PERIODS OF INACTIVITY OR UPON COMPLETION OF THE WORK. EACH SIGN SHALL BE ERECTED IN A NEAT AND WORKMANLIKE MANNER.

3. CONSTRUCTION SIGN COVERS SHALL CONSIST OF A PANEL, PAINTED FLAT BLACK, THE SAME SIZE AS THE SIGN IT COVERS. THE PANEL SHALL BE OF WOOD, PLYWOOD, HARDBOARD OR ANY MATERIAL SATISFACTORY TO THE ENGINEER. NO MATERIAL WILL BE APPROVED THAT WILL DETERIORATE BY EXPOSURE TO THE WEATHER DURING THE PROJECT. MOUNTING OF THE PANEL SHALL BE DONE IN SUCH A WAY AS NOT TO DAMAGE THE SIGN FACE MATERIAL.

4. SIGNS SHALL BE MAINTAINED IN A CLEAN AND LEGIBLE CONDITION SATISFACTORY TO THE ENGINEER. THEY SHALL BE KEPT PLUMB AND LEVEL, AND ALWAYS PRESENT A NEAT APPEARANCE. DAMAGED, DEFACED OR DIRTY SIGNS SHALL BE REPAIRED, CLEANED OR REPLACED AS ORDERED BY THE ENGINEER.

5. NO CROSS-BRACING OR BACK-BRACING TO KEEP POSTS PLUMB WILL BE ALLOWED. CONCRETE FOUNDATIONS, COLLARS OR SOIL BEARING PLATES ARE NOT PERMITTED. CONSTRUCTION SIGNS SHALL BE PLACED ON TWO POSTS.

6. CONSTRUCTION SIGNS INSTALLED ON POSTS SHALL BE SET SECURELY IN THE GROUND. THE BOTTOM OF A SIGN SHALL BE AT LEAST FIVE FEET ABOVE THE EDGE OF PAVEMENT AND THE NEAREST EDGE OF A SIGN SHALL BE AT LEAST SIX FEET OUTSIDE THE SHOULDER POINT, FOUR FEET OUTSIDE GUARDRAIL, OR TWO FEET OUTSIDE CURBING OR SIDEWALK. THE INSTALLATION OF SIGNS SHALL BE SUBJECT TO APPROVAL OF THE ENGINEER. IN URBAN AREAS, THE BOTTOM OF THE SIGN SHALL BE AT LEAST SEVEN FEET ABOVE THE SIDEWALK OR EDGE OF PAVEMENT, WHICHEVER IS HIGHER.

7. PORTABLE SIGNS SHALL BE PLACED ON THE EDGE OF ROADWAY AND A MINIMUM OF ONE FOOT ABOVE THE TRAVELED WAY. ALL VEGETATION THAT INTERFERES WITH VISIBILITY OF THE SIGNS SHALL BE REMOVED. WHEN PLACED BEHIND GUARDRAIL, THE BOTTOM OF THE SIGN FACE SHALL BE ABOVE THE TOP OF THE GUARDRAIL.

8. SIGNS SHALL BE REMOVED UPON COMPLETION OF THE WORK AT THE DISCRETION OF THE ENGINEER.

9. ROLL UP CONSTRUCTION SIGNS SHALL HAVE RETROREFLECTIVE SHEETING EQUAL TO OR EXCEEDING THE "AMERICAN ASSOCIATION OF STATE HIGHWAY AND TRANSPORTATION OFFICIALS" (AASHTO) M 268 ["AMERICAN SOCIETY FOR TESTING AND MATERIALS" (ASTM) D 4956] TYPE VI AND TYPE VII UNLESS OTHERWISE NOTED.

10. SOLID SUBSTRATE CONSTRUCTION SIGNS SHALL HAVE RETROREFLECTIVE SHEETING EQUAL TO OR EXCEEDING THE "AMERICAN ASSOCIATION OF STATE HIGHWAY AND TRANSPORTATION OFFICIALS" (AASHTO) M 268 ["AMERICAN SOCIETY FOR TESTING AND MATERIALS" (ASTM) D 4956] TYPE VIII OR IX REQUIREMENTS UNLESS OTHERWISE NOTED.

11. WHERE CONSTRUCTION SIGN INSTALLATIONS ARE NOT PROTECTED BY GUARDRAIL OR OTHER APPROVED TRAFFIC BARRIERS, ALL SIGN STANDS AND POST INSTALLATIONS SHALL MEET "NATIONAL COOPERATIVE HIGHWAY RESEARCH PROGRAM" (NCHRP) REPORT 350 OR THE AASHTO "MANUAL FOR ASSESSING SAFETY HARDWARE" (MASH). THE APPROPRIATE RESOURCE SHALL BE DETERMINED AS DESCRIBED IN THE MASH PUBLICATION. NO SIGN POSTS SHALL EXTEND OVER THE TOP OF THE SIGN INSTALLED ON SAID POSTS. WHEN ANCHORS ARE INSTALLED, STUBS SHALL NOT BE GREATER THAN FOUR INCHES ABOVE EXISTING GROUND.

12. ROADWAY AND SHOULDER WIDTHS DEPICTED ON THE STANDARD DRAWINGS MAY VARY.

13. THESE STANDARD DRAWINGS ARE INTENDED TO SERVE AS VTRANS STANDARD OPERATING PROCEDURE. IT IS NOTED THAT COMPONENT PARTS OF A TEMPORARY TRAFFIC CONTROL WORK ZONE MAY BE MODIFIED DUE TO FIELD CONDITIONS, AT THE DISCRETION OF THE ENGINEER.

OTHER STDS. REQUIRED: **NONE**

REVISIONS AND CORRECTIONS

AUG. 6, 2012 - ORIGINAL APPROVAL DATE

APPROVED

HIGHWAY SAFETY & DESIGN ENGINEER

DIRECTOR OF PROGRAM DEVELOPMENT

Mark D. Richter

FEDERAL HIGHWAY ADMINISTRATION

TRAFFIC CONTROL GENERAL NOTES

VERMONT AGENCY OF TRANSPORTATION

STANDARD

T-1

LEGEND

(A) ROAD WORK AHEAD — W20-1

(B) ROAD WORK 500 FT — W20-1

(C) SIDE ROAD WORK AHEAD — VC-869

(D) SIDE ROAD WORK 500 FT — VC-869

(E) SIDE ROAD WORK LEFT — VC-869

(F) SIDE ROAD WORK RIGHT — VC-869

(G) ROAD WORK NEXT XX MILES — G20-1

(H) END ROAD WORK — G20-2

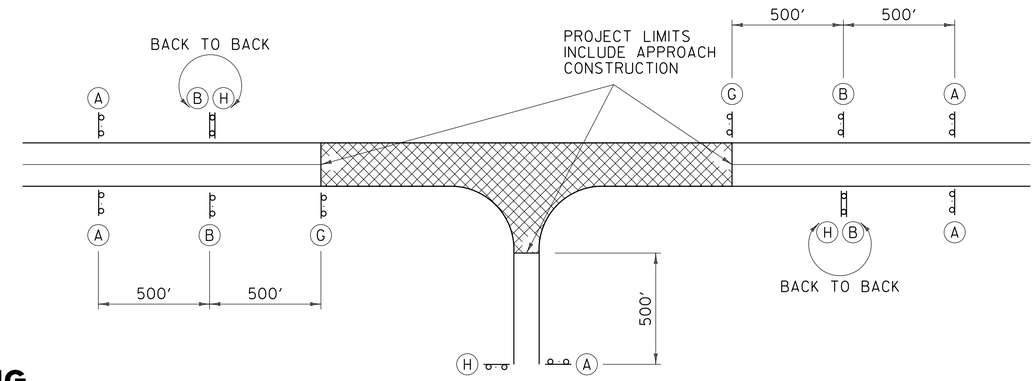

TYPICAL APPROACH SIGNING

FIELD CONDITIONS MAY DICTATE THE ACTUAL PLACEMENT.

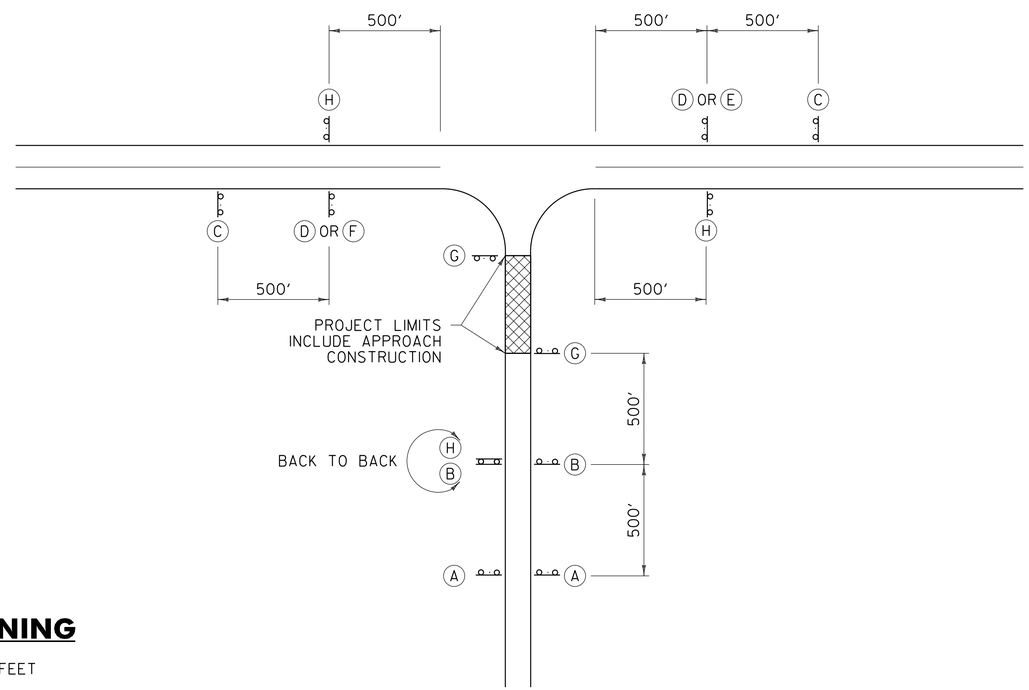

SIDE ROAD APPROACH SIGNING

TO BE USED WHEN CONSTRUCTION IS UP TO 1000 FEET FROM THE INTERSECTION. FIELD CONDITIONS MAY DICTATE THE ACTUAL PLACEMENT.

GENERAL NOTES:

1. SIGNS SHOWN ON THIS SHEET ARE INTENDED FOR USE IN PROVIDING ADVANCE WARNING AND INFORMATION ON CONSTRUCTION PROJECTS OVER WHICH TRAFFIC WILL BE MAINTAINED. WHEN ADDITIONAL APPROACH SIGNS OR OTHER TYPES OF ADVANCE SIGNING OR CONTROL ARE NECESSARY, THE PLANS AND/OR THE SPECIFICATIONS FOR THAT PROJECT WILL GIVE THE DETAILS OF THE SIGNS AND DEVICES REQUIRED. FOR ON-PROJECT CONSTRUCTION SIGNS, REFER TO APPROPRIATE STANDARD SHEETS.
2. THE "ROAD WORK NEXT XX MILES" SIGN (G20-1) SHALL BE INSTALLED IN ADVANCE OF TEMPORARY TRAFFIC CONTROL ZONES THAT ARE MORE THAN TWO MILES IN LENGTH OR AS DIRECTED BY THE ENGINEER. DISTANCES SHALL BE STATED TO THE NEAREST WHOLE MILE.
3. SIGNS SHALL BE LOCATED AS DETAILED ON THIS SHEET OR AS OTHERWISE SHOWN ON THE PLANS. THEY SHALL APPEAR AT EACH END OF THE HIGHWAY UNDER CONSTRUCTION AND ON ALL INTERSECTING PUBLIC HIGHWAYS. THE ENGINEER SHALL DETERMINE THE EXACT LOCATIONS.

OTHER STDS. REQUIRED: **T–1, T–28**

REVISIONS AND CORRECTIONS

AUG. 6, 2012 - ORIGINAL APPROVAL DATE

APPROVED

HIGHWAY SAFETY & DESIGN ENGINEER

DIRECTOR OF PROGRAM DEVELOPMENT

Mark D. Richter

FEDERAL HIGHWAY ADMINISTRATION

CONVENTIONAL ROADS CONSTRUCTION APPROACH SIGNING

VERMONT AGENCY OF TRANSPORTATION

STANDARD

T-10

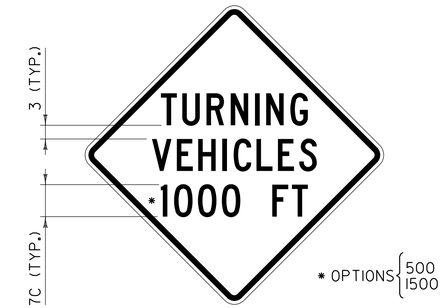

VC–001

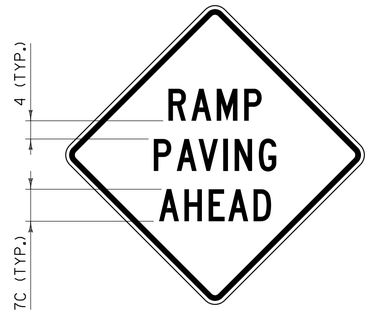

VC–003

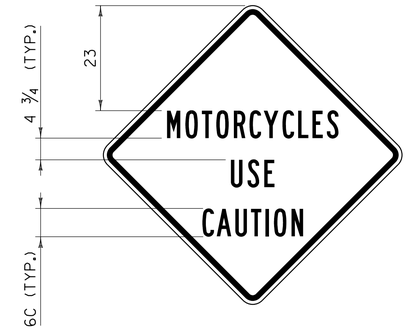

VC–004

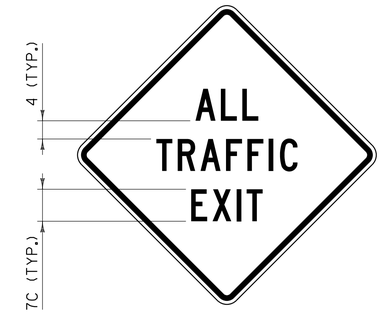

VC–008

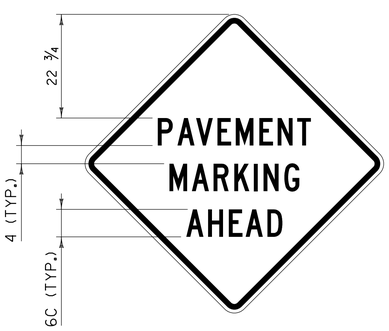

VC–813

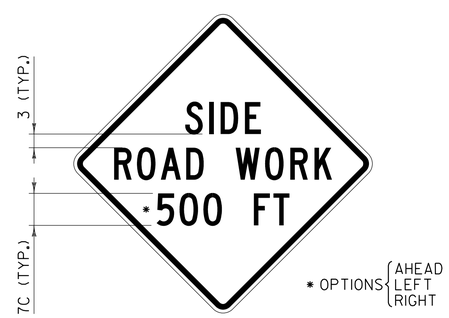

VC–869

VC–874

GENERAL NOTES:

1. COLORS FOR SIGNS SHALL BE BLACK LEGEND AND BORDER ON FLUORESCENT ORANGE BACKGROUND.
2. CONSTRUCTION SIGNS SHALL BE 48 INCH BY 48 INCH. IF SOLID SUBSTRATE SIGNS ARE USED, SIGNS SHALL HAVE CORNERS ROUNDED TO A THREE INCH RADIUS.
3. SIGNS SHALL HAVE 1 1/4 INCH WIDE BORDERS THAT ARE INDENTED 3/4 INCH FROM THE EDGE OF THE SIGN.
4. SIGNS SHALL HAVE THE LEGEND CENTERED HORIZONTALLY AND VERTICALLY ON THE SIGN UNLESS OTHERWISE INDICATED.
5. ALL DIMENSIONS SHOWN IN INCHES.

OTHER STDS. REQUIRED: **T–1**

REVISIONS AND CORRECTIONS

AUG. 6, 2012 - ORIGINAL APPROVAL DATE

APPROVED

HIGHWAY SAFETY & DESIGN ENGINEER

DIRECTOR OF PROGRAM DEVELOPMENT

Mark D. Richter

FEDERAL HIGHWAY ADMINISTRATION

CONSTRUCTION SIGN DETAILS

VERMONT AGENCY OF TRANSPORTATION

STANDARD

T - 28

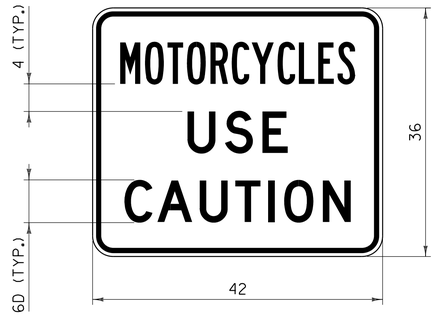

VC–004P

NOTES:

1. CORNERS SHALL BE ROUNDED TO A THREE INCH RADIUS.
2. THE BORDER SHALL BE ¾ INCH WIDE WITH A ½ INCH INDENT FROM THE EDGE OF THE SIGN.
3. "MOTORCYCLES" SHALL HAVE A SPECIFIED WIDTH OF 34 INCHES.
4. "USE" SHALL HAVE A SPECIFIED WIDTH OF 14 ½ INCHES.
5. "CAUTION" SHALL HAVE A SPECIFIED WIDTH OF 32 ¾ INCHES.
6. SIGN SHALL ONLY BE INSTALLED AS A SUPPLEMENTAL TO A PARENT WARNING SIGN AND SHALL NOT BE INSTALLED BY ITSELF.

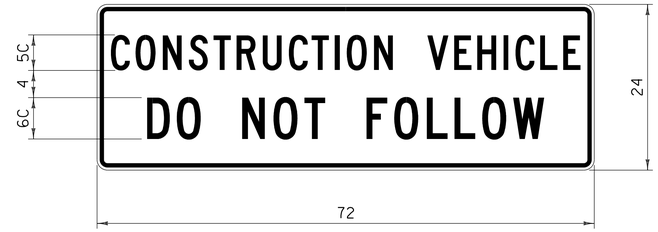

VC–007

NOTES:

1. CORNERS SHALL BE ROUNDED TO A 1½ INCH RADIUS.
2. THE BORDER SHALL BE ⅝ INCH WIDE WITH A ⅜ INCH INDENT FROM THE EDGE OF THE SIGN.
3. "CONSTRUCTION VEHICLE" SHALL HAVE A SPECIFIED WIDTH OF 68 INCHES.
4. "DO NOT FOLLOW" SHALL HAVE A SPECIFIED WIDTH OF 57 ½ INCHES.
5. SIGN SHALL BE MOUNTED IN A CONSPICUOUS LOCATION ON THE REAR OF THE CONSTRUCTION VEHICLE.
6. THE SIGN SHALL BE MOUNTED AS NOT TO INTERFERE WITH THE VISIBILITY OF DIRECTIONAL SIGNALS OR TAIL LIGHTS AS REQUIRED BY LAW.
7. SIGN SHALL BE COVERED OR REMOVED WHEN NOT IN USE.

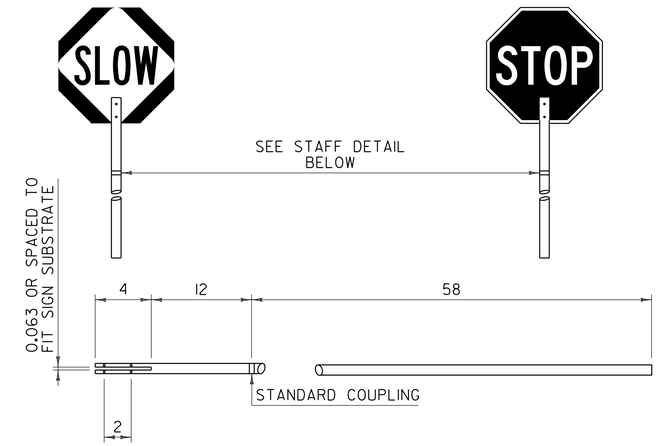

STOP–SLOW PADDLE & STAFF DETAIL

NOTES:

1. REFER TO THE "STANDARD HIGHWAY SIGNS AND MARKINGS" BOOK (SHSM) "TEMPORARY TRAFFIC CONTROL - WARNING SIGNS" FOR THE STOP-SLOW PADDLE DESIGN.
2. COLORS FOR THE SLOW SIDE OF THE PADDLE SHALL BE BLACK LEGEND AND BORDER ON A FLUORESCENT ORANGE DIAMOND WITH RETROREFLECTIVE SHEETING EQUAL TO OR EXCEEDING AASHTO M 268 [ASTM D 4956] TYPE VII, VIII OR IX REQUIREMENTS.
3. COLORS FOR THE STOP SIDE OF THE PADDLE SHALL BE WHITE RETROREFLECTIVE LEGEND AND BORDER ON A RED RETROREFLECTIVE OCTAGON. BOTH COLORS SHALL HAVE RETROREFLECTIVE SHEETING EQUAL TO OR EXCEEDING AASHTO M 268 [ASTM D 4956] TYPE III.
4. SIGN SUBSTRATE MATERIALS SHALL BE ALUMINUM, ACRYLONITRILE BUTADIENE STYRENE (ABS) PLASTIC OR EQUIVALENT.
5. THE STAFF MAY BE RIGID ABS PLASTIC OR WOOD WITH A ONE TO 1½ INCH DIAMETER.
6. SIGNS SHALL BE MAINTAINED IN A CLEAN AND LEGIBLE CONDITION SATISFACTORY TO THE ENGINEER. THEY SHALL BE COMPLETELY VISIBLE TO APPROACHING TRAFFIC AT ALL TIMES. THEY SHALL BE KEPT PLUMB AND LEVEL, AND ALWAYS PRESENT A NEAT APPEARANCE. DAMAGED, DEFACED OR DIRTY SIGNS SHALL BE REPAIRED, CLEANED OR REPLACED AS ORDERED BY THE ENGINEER.

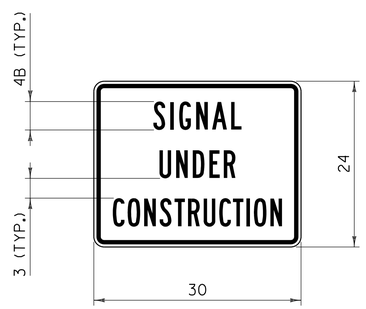

VC–820

NOTES:

1. CORNERS SHALL BE ROUNDED TO A 1½ INCH RADIUS.
2. THE BORDER SHALL BE ⅝ INCH WIDE WITH A ⅜ INCH INDENT FROM THE EDGE OF THE SIGN.
3. "SIGNAL" SHALL HAVE A SPECIFIED WIDTH OF 12 ¾ INCHES.
4. "UNDER" SHALL HAVE A SPECIFIED WIDTH OF 11 INCHES.
5. "CONSTRUCTION" SHALL HAVE A SPECIFIED WIDTH OF 24 ½ INCHES.
6. SIGN SHALL ONLY BE INSTALLED AS A SUPPLEMENTAL TO A PARENT WARNING SIGN AND SHALL NOT BE INSTALLED BY ITSELF.

GENERAL NOTES:

1. ALL LEGEND SHALL BE CENTERED VERTICALLY AND HORIZONTALLY UNLESS OTHERWISE NOTED.
2. COLORS FOR SIGNS SHALL BE BLACK LEGEND AND BORDER ON FLUORESCENT ORANGE BACKGROUND UNLESS OTHERWISE NOTED.
3. ALL DIMENSIONS IN INCHES.

OTHER STDS. REQUIRED: **T–1**

REVISIONS AND CORRECTIONS

AUG. 6, 2012 - ORIGINAL APPROVAL DATE

APPROVED

HIGHWAY SAFETY & DESIGN ENGINEER

DIRECTOR OF PROGRAM DEVELOPMENT

Mark D. Richter

FEDERAL HIGHWAY ADMINISTRATION

CONSTRUCTION SIGN DETAILS

VERMONT AGENCY OF TRANSPORTATION

STANDARD

T-30

DROP-OFF ADJACENT TO TRAVELED WAY

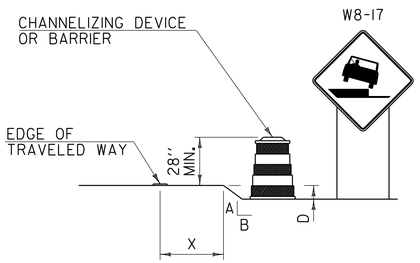

TYPE 1

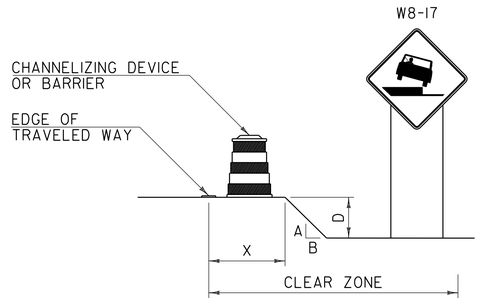

TYPE 2

NOTES:

1. CHANNELIZING DEVICES OR BARRIER SHOULD BE PLACED TO MAXIMIZE THE WIDTH OF THE TRAVELED WAY.
2. SEE CHART "A" FOR SPECIFIC REQUIREMENTS.
3. IF THE DROP-OFF REQUIRES CHANNELIZING DEVICES TO REMAIN IN PLACE OVERNIGHT, THEN "SHOULDER DROP-OFF SYMBOL" (W8-17) SIGNS SHOULD BE INSTALLED.

DROP-OFF BETWEEN ADJACENT TRAVELED LANES

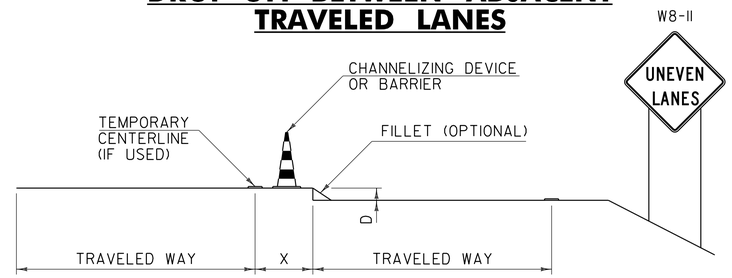

NOTES:

1. WHENEVER A LONGITUDINAL DROP-OFF BETWEEN ADJACENT TRAVELED LANES IS TO BE LEFT OVERNIGHT, THEN "UNEVEN LANES" (W8-11) SIGNS AND CHANNELIZING DEVICES SHOULD BE INSTALLED.
2. IF REQUIRED, THE CHANNELIZING DEVICES USED SHOULD BE THOSE WHICH MAXIMIZE THE WIDTH OF THE TRAVELED LANE (I.E. CONES, VERTICAL PANELS OR TUBULAR MARKERS).
3. A BITUMINOUS CONCRETE FILLET WITH A 1.5:1 SLOPE MAY BE USED IN PLACE OF CHANNELIZING DEVICES, HOWEVER THE "UNEVEN LANES" (W8-11) SIGNS SHOULD STILL BE INSTALLED.
4. SEE CHART "A" FOR SPECIFIC REQUIREMENTS.

DROP-OFF BEYOND SHOULDER OR CURB

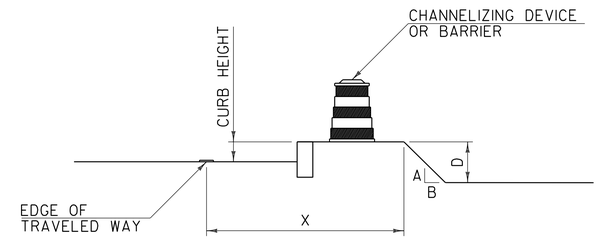

NOTES:

1. USE CHART "A" FOR VERTICAL CURBS UNDER SIX INCHES, MOUNTABLE CURBS OR ROADWAYS WITH A POSTED SPEED ABOVE 40 MPH.
2. USE CHART "B" FOR VERTICAL CURBS SIX INCHES OR GREATER.

CHART "A"
ALL SPEEDS WITH NO CURB OR MOUNTABLE CURB

X (FEET)	DROP (D) (INCHES)	A:B SLOPE	RECOMMENDED DEVICE
0 TO 4'	LESS THAN 2"	ANY	NONE
	2" TO 6"	1:1.5 OR FLATTER	NONE
		STEEPER THAN 1:1.5	CHANNELIZING DEVICE
	GREATER THAN 6"	1:3 OR FLATTER	NONE
		STEEPER THAN 1:3	BARRIER
4' TO 10'	LESS THAN 6"	ANY	NONE
	6" TO 12"	1:3 OR FLATTER	NONE
		STEEPER THAN 1:3	BARRIER
	GREATER THAN 12"	1:3 OR FLATTER	NONE
		STEEPER THAN 1:3	BARRIER
10' TO CZ	LESS THAN OR EQUAL TO 12"	ANY	NONE
	GREATER THAN 12"	1:3 OR FLATTER	NONE
		STEEPER THAN 1:3	BARRIER

NOTES:

1. THE MINIMUM CLEAR ZONE FOR FREEWAYS IS TO BE DETERMINED PER THE CURRENT AASHTO ROADSIDE DESIGN GUIDE. ALL OTHER HIGHWAYS WILL BE DETERMINED PER THE CURRENT "VERMONT STATE STANDARDS" BOOK.
2. CHANNELIZING DEVICES MAY BE USED INSTEAD OF BARRIER FOR SHORT TERM OPERATIONS.
3. ON BORDERLINE CONDITIONS, THE ENGINEER SHOULD DETERMINE WHICH TREATMENT IS ADEQUATE FOR THE EXISTING CONDITIONS.

CHART "B"
40 MPH OR LESS WITH VERTICAL CURB

X (FEET)	DROP (D) (INCHES)	DEVICE REQUIRED
0-10'	LESS THAN OR EQUAL TO 12"	NONE
0-10'	GREATER THAN 12"	CHANNELIZING DEVICE
GREATER THAN 10'	ANY	NONE

GENERAL NOTES:

1. THESE CONDITIONS AND TREATMENTS ARE ONLY PART OF THE TRAFFIC CONTROL SYSTEM AND SHOULD BE USED IN ADDITION TO THE PROPER WORK ZONE SIGNING.
2. THE FOLLOWING ARE "MANUAL ON UNIFORM TRAFFIC CONTROL DEVICES" (MUTCD) COMPLIANT CHANNELIZING DEVICES:

   A. VERTICAL PANEL
   B. TYPE I OR TYPE II BARRICADE
   C. PLASTIC DRUM
   D. CONE - WHERE APPLICABLE
   E. TUBULAR MARKERS

   IF CHANNELIZING DEVICES ARE REQUIRED TO STAY IN PLACE DURING NIGHTTIME HOURS, THEY SHALL BE STABILIZED WHILE UNATTENDED IN ACCORDANCE WITH THE MUTCD.
3. WHERE BARRIER IS NECESSARY, THE BARRIER SHALL BE TAPERED BEYOND THE CLEAR ZONE. WHEN THE BARRIER CANNOT BE TAPERED BEYOND THE CLEAR ZONE, A MUTCD COMPLIANT END TREATMENT SHALL BE USED. BARRIER AND END TREATMENT SHALL MEET "NATIONAL COOPERATIVE HIGHWAY RESEARCH PROGRAM" (NCHRP) REPORT 350 OR THE "AMERICAN ASSOCIATION OF STATE HIGHWAY AND TRANSPORTATION OFFICIALS" (AASHTO) "MANUAL FOR ASSESSING SAFETY HARDWARE" (MASH). THE APPROPRIATE RESOURCE SHALL BE DETERMINED AS DESCRIBED IN THE MASH PUBLICATION.
4. CHANNELIZING DEVICE SPACING ALONG A LONGITUDINAL DROP-OFF (TANGENT) SHALL BE AS FOLLOWS:

   TANGENT - CHANNELIZING DEVICES SHALL BE SPACED "2S" ("S" IS EQUAL TO THE POSTED SPEED LIMIT IN FEET) APART.
5. "LOW SHOULDER" (W8-9) AND "SHOULDER DROP-OFF SYMBOL" (W8-17) SIGNS, WHEN USED, SHOULD BEGIN PRIOR TO THE DROP-OFF CONDITION AND SHOULD BE REPEATED EVERY 1500 FEET.

OTHER STDS. REQUIRED: **T-1**

REVISIONS AND CORRECTIONS

AUG. 6, 2012 - ORIGINAL APPROVAL DATE

APPROVED

HIGHWAY SAFETY & DESIGN ENGINEER

DIRECTOR OF PROGRAM DEVELOPMENT

Mark D. Richter

FEDERAL HIGHWAY ADMINISTRATION

CONSTRUCTION ZONE LONGITUDINAL DROP-OFFS

VERMONT AGENCY OF TRANSPORTATION

STANDARD

T-35

DROP-OFF ADJACENT TO TRAVELED WAY

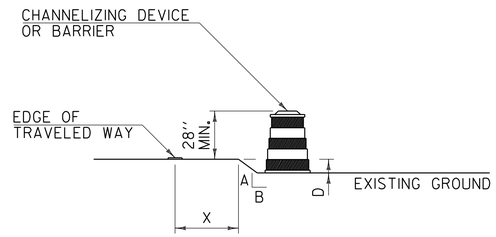

NOTES:

1. CHANNELIZING DEVICES SHOULD BE PLACED TO MAXIMIZE THE WIDTH OF THE TRAVELED WAY.
2. SEE CHART "A" FOR SPECIFIC REQUIREMENTS.
3. IF THE DROP-OFF REQUIRES CHANNELIZING DEVICES TO REMAIN IN PLACE OVERNIGHT, THEN "LOW SHOULDER" (W8-9) OR "SHOULDER DROP-OFF SYMBOL" (W8-17) SIGNS SHOULD BE INSTALLED.

DROP-OFF BETWEEN ADJACENT TRAVELED LANES

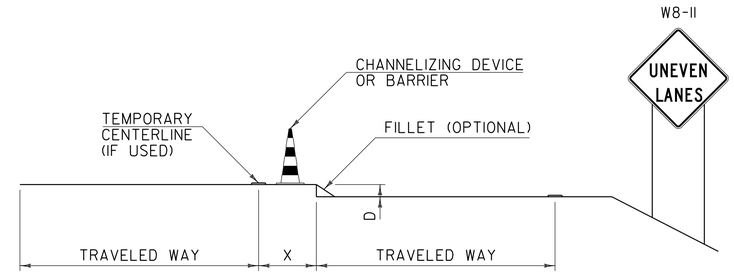

NOTES:

1. WHENEVER A LONGITUDINAL DROP-OFF BETWEEN ADJACENT TRAVELED LANES IS TO BE LEFT OVERNIGHT, THEN "UNEVEN LANES" (W8-11) SIGNS AND CHANNELIZING DEVICES SHOULD BE INSTALLED.
2. IF REQUIRED, THE CHANNELIZING DEVICES USED SHALL BE THOSE WHICH MAXIMIZE THE WIDTH OF THE TRAVELED LANE (I.E. CONES, VERTICAL PANELS OR TUBULAR MARKERS).
3. A BITUMINOUS CONCRETE FILLET WITH A 1.5:1 SLOPE MAY BE USED IN PLACE OF CHANNELIZING DEVICES, HOWEVER THE "UNEVEN LANES" (W8-11) SIGNS SHOULD STILL BE INSTALLED.
4. SEE CHART "A" FOR SPECIFIC REQUIREMENTS.

CHART "A"
ALL SPEEDS WITH NO CURB

X (FEET)	DROP (D) (INCHES)	A:B SLOPE	DEVICE REQUIRED
0 TO 4'	LESS THAN 2"	ANY	NONE
	2" TO 6"	1:1.5 OR FLATTER	NONE
		STEEPER THAN 1:1.5	CHANNELIZING DEVICE
	GREATER THAN 6"	1:3 OR FLATTER	NONE
		STEEPER THAN 1:3	BARRIER
4' TO 10'	LESS THAN 6"	ANY	NONE
	6" TO 12"	1:3 OR FLATTER	NONE
		STEEPER THAN 1:3	BARRIER

NOTE:

1. ON BORDERLINE CONDITIONS, THE ENGINEER SHOULD DETERMINE WHICH TREATMENT IS ADEQUATE FOR THE EXISTING CONDITIONS.

GENERAL NOTES:

1. THESE CONDITIONS AND TREATMENTS ARE ONLY PART OF THE TRAFFIC CONTROL SYSTEM AND SHOULD BE USED IN ADDITION TO THE PROPER WORK ZONE SIGNING.
2. THE FOLLOWING ARE "MANUAL ON UNIFORM TRAFFIC CONTROL DEVICES" (MUTCD) COMPLIANT CHANNELIZING DEVICES:

   A. VERTICAL PANEL
   B. TYPE I OR TYPE II BARRICADE
   C. PLASTIC DRUM
   D. CONE - WHERE APPLICABLE
   E. TUBULAR MARKERS

   IF CHANNELIZING DEVICES ARE REQUIRED TO STAY IN PLACE DURING NIGHTTIME HOURS, THEY SHALL BE STABILIZED WHILE UNATTENDED IN ACCORDANCE WITH THE MUTCD.
3. WHERE BARRIER IS NECESSARY, THE BARRIER SHALL BE TAPERED BEYOND THE CLEAR ZONE. WHEN THE BARRIER CANNOT BE TAPERED BEYOND THE CLEAR ZONE, A MUTCD COMPLIANT END TREATMENT SHALL BE USED. BARRIER AND END TREATMENT SHALL MEET "NATIONAL COOPERATIVE HIGHWAY RESEARCH PROGRAM" (NCHRP) REPORT 350 OR THE "AMERICAN ASSOCIATION OF STATE HIGHWAY AND TRANSPORTATION OFFICIALS" (AASHTO) "MANUAL FOR ASSESSING SAFETY HARDWARE" (MASH). THE APPROPRIATE RESOURCE SHALL BE DETERMINED AS DESCRIBED IN THE MASH PUBLICATION.
4. CHANNELIZING DEVICE SPACING ALONG A LONGITUDINAL DROP-OFF (TANGENT) SHALL BE AS FOLLOWS:

   TANGENT - CHANNELIZING DEVICES SHALL BE SPACED "2S" ("S" IS EQUAL TO THE POSTED SPEED LIMIT IN FEET) APART.
5. "LOW SHOULDER" (W8-9) AND "SHOULDER DROP-OFF SYMBOL" (W8-17) SIGNS, WHEN USED, SHOULD BEGIN PRIOR TO THE DROP-OFF CONDITION AND SHOULD BE REPEATED EVERY 1500 FEET.

OTHER STDS. REQUIRED: T-1

REVISIONS AND CORRECTIONS

AUG. 6, 2012 - ORIGINAL APPROVAL DATE

APPROVED

HIGHWAY SAFETY & DESIGN ENGINEER

DIRECTOR OF PROGRAM DEVELOPMENT

Mark D. Richter

FEDERAL HIGHWAY ADMINISTRATION

CONSTRUCTION ZONE LONGITUDINAL DROP-OFFS FOR PAVING

VERMONT AGENCY OF TRANSPORTATION

STANDARD

T-36

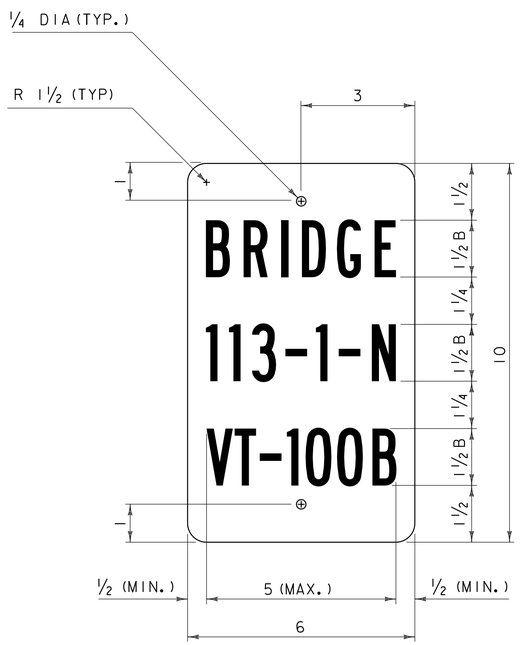

VD-701

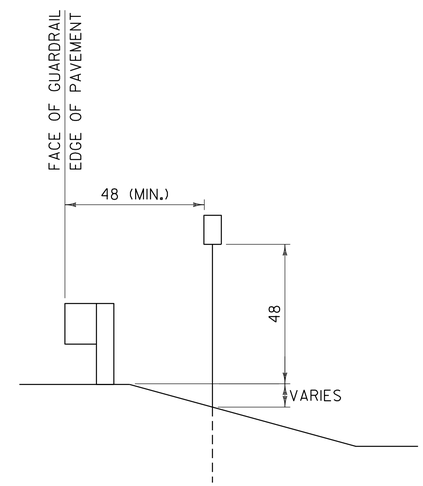

VD-701 INSTALLATION DETAIL

GENERAL NOTES:

1. BRIDGE NUMBER PLAQUES ARE TO BE INSTALLED ALONG THE FEDERAL AID HIGHWAY SYSTEM INCLUDING ALL STATE HIGHWAYS AND TOWN HIGHWAYS ON THE FEDERAL AID HIGHWAY SYSTEM.
2. BRIDGE NUMBER PLAQUES SHALL BE LOCATED ON BOTH BRIDGE APPROACHES AT THE NEAREST VISIBLE LOCATION.
3. THE SIGN BASE MATERIAL SHALL BE 0.063 INCH FLAT SHEET ALUMINUM.
4. THE SIGN SHALL BE WHITE RETROREFLECTIVE LEGEND ON A GREEN RETROREFLECTIVE BACKGROUND, BOTH SHALL HAVE RETROREFLECTIVE SHEETING EQUAL TO OR EXCEEDING "AMERICAN ASSOCIATION OF STATE HIGHWAY AND TRANSPORTATION OFFICIALS" (AASHTO) M 268 ["AMERICAN SOCIETY FOR TESTING AND MATERIALS" (ASTM) D 4956] TYPE III.
5. THE SECOND LINE OF TEXT INDICATES THE BRIDGE NUMBER. THE BRIDGE NUMBER CAN BE OBTAINED USING THE VERMONT AGENCY OF TRANSPORTATION (VAOT) ROUTE LOGS OR BY CONSULTING WITH THE VAOT STRUCTURES SECTION.
6. THE THIRD LINE OF TEXT INDICATES THE STATE ROUTE NUMBER. IN ALL CASES THIS WILL BE DEPICTED USING THE LETTER ABBREVIATION, FOLLOWED BY A HYPHEN, FOLLOWED BY THE ROUTE NUMBER. FOR EXAMPLE US ROUTE 2 WOULD BE IDENTIFIED USING US-2.
7. THE SECOND AND THIRD LINES OF TEXT SHALL BE CENTERED HORIZONTALLY AND SHALL BE AS DEFINED IN THE PLANS.
8. A SINGLE 14 GAGE, 1.75 INCH SQUARE STEEL POST AND 12 GAGE, TWO INCH SQUARE ANCHOR SHALL BE USED FOR INSTALLATION. THE ANCHOR SHALL BE A MINIMUM OF 30 INCHES IN LENGTH.
9. ALL DIMENSIONS SHOWN IN INCHES.

OTHER STDS. REQUIRED: **T-45**

REVISIONS AND CORRECTIONS

APRIL 9, 2014 - ORIGINAL APPROVAL DATE

APPROVED

HIGHWAY SAFETY & DESIGN ENGINEER

DIRECTOR OF PROGRAM DEVELOPMENT

Mark D. Richter

FEDERAL HIGHWAY ADMINISTRATION

BRIDGE NUMBER PLAQUE

VERMONT AGENCY OF TRANSPORTATION

STANDARD

T-42

POST AND ANCHOR SELECTION CHART

POST SIZE (IN.)	POST THICKNESS (IN.)	POST WEIGHT (LBS/FT.)	POST GAGE	SECTION MODULUS ($IN.^3$)	ONE POST SV	TWO POST SV	THREE POST SV	POSTS PERMITTED IN 8' PATH	ANCHOR SIZE (IN.)	ANCHOR GAGE	MINIMUM ANCHOR LENGTH
1.75	.083	1.88	14	0.222	45	90	135	TWO	2.00	12	30
2.00	.109	2.42	12	0.393	80	160	240	TWO	2.25	12	48
2.50	.109	3.35	12	0.673	137	274	411	ONE	3.00	7	48

NOTES:

1. ALL SIGN POSTS SHALL HAVE 7/16 INCH HOLES EVERY ONE INCH ON CENTER (ALL FOUR SIDES).
2. THE NUMBER OF SIGN POSTS PERMITTED WITHIN AN EIGHT FOOT PATH ASSUMES THAT THE SIGN ASSEMBLY IS NOT PROTECTED BY GUARDRAIL OR IS LOCATED WITHIN A GUARDRAIL'S DEFLECTION DISTANCE DETERMINED PER THE CURRENT "AMERICAN ASSOCIATION OF STATE HIGHWAY AND TRANSPORTATION OFFICIALS" (AASHTO) ROADSIDE DESIGN GUIDE. ADDITIONAL POSTS MAY BE INSTALLED USING SLIP BASES THAT MEET "NATIONAL COOPERATIVE HIGHWAY RESEARCH PROGRAM" (NCHRP) REPORT 350 OR THE AASHTO "MANUAL FOR ASSESSING SAFETY HARDWARE" (MASH). THE APPROPRIATE RESOURCE SHALL BE DETERMINED AS DESCRIBED IN THE MASH PUBLICATION.
3. TO USE THE SELECTION VALUE (SV) COLUMNS IN THE TABLE ABOVE, MULTIPLY A SIGN'S SURFACE AREA IN SQUARE FEET (H x L) BY THE SIGN'S HEIGHT IN FEET MEASURED FROM THE GROUND TO THE CENTROID OF THE SIGN ASSEMBLY (h). THIS RESULT MUST BE LESS THAN OR EQUAL TO THE CORRESPONDING SELECTION VALUE. NOTE THAT FOR SIGNS WITH MULTIPLE POSTS, THE LARGEST HEIGHT DIMENSION SHALL BE USED TO CALCULATE THE POST SELECTION VALUE.
4. THE DESIGN CRITERIA UTILIZED IN SIGN POST AND ANCHOR SELECTION IS AS FOLLOWS: WIND SPEED OF 70 MPH (10 YEAR MEAN RECURRENCE INTERVAL), WIND PRESSURE OF 19 PSF, STEEL MINIMUM YIELD OF 55,000 PSI, AND AN ALLOWABLE STRESS OF 1.4 (0.60 FY).

CORNER BOLT INSTALLATION DETAIL

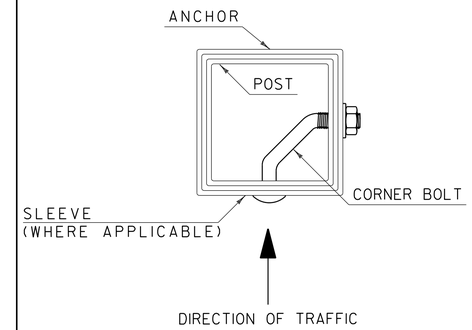

NOTES:

1. CORNER BOLTS SHALL BE 5/16 INCH DIAMETER WITH 18 THREADS PER INCH AND DIMENSIONS SHALL BE DETERMINED BASED ON THE OUTERMOST DIMENSION OF THE SLEEVE, ANCHOR OR POST. THREAD EXPOSURE MUST EXCEED THE CORRESPONDING NUT WIDTH. THE CORNER BOLT AND CORRESPONDING HARDWARE SHALL BE ZINC PLATED, MEETING OR EXCEEDING THE REQUIREMENTS OF THE "AMERICAN SOCIETY FOR TESTING AND MATERIALS" (ASTM) A307.

SLEEVE /ANCHOR INSTALLATION DETAIL

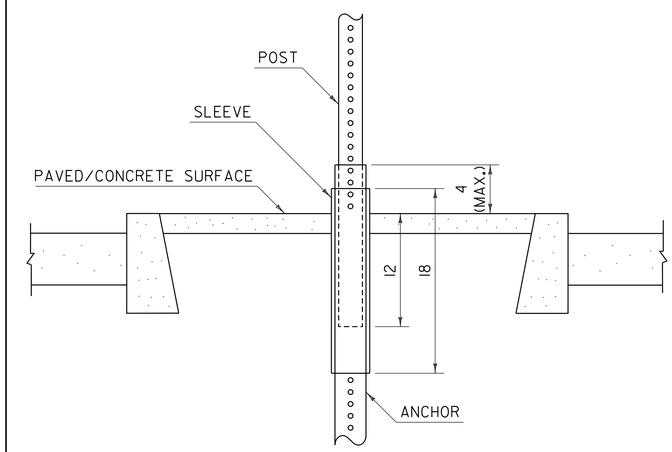

NOTES:

1. A SLEEVE SHALL BE INSTALLED FOR SIGN INSTALLATIONS IN CONCRETE OR PAVEMENT.
2. THE SLEEVE SHALL BE 18 INCHES MINIMUM IN LENGTH.
3. THREE INCH SLEEVES THAT DO NOT HAVE HOLES WILL REQUIRE THAT 7/16 INCH HOLES ARE DRILLED TO FACILITATE CONNECTIONS.
4. REFER TO CURRENT EDITION OF THE "VERMONT AGENCY OF TRANSPORTATION STANDARD SPECIFICATIONS FOR CONSTRUCTION" FOR MATERIAL REQUIREMENTS.

POST SPACING DETAILS

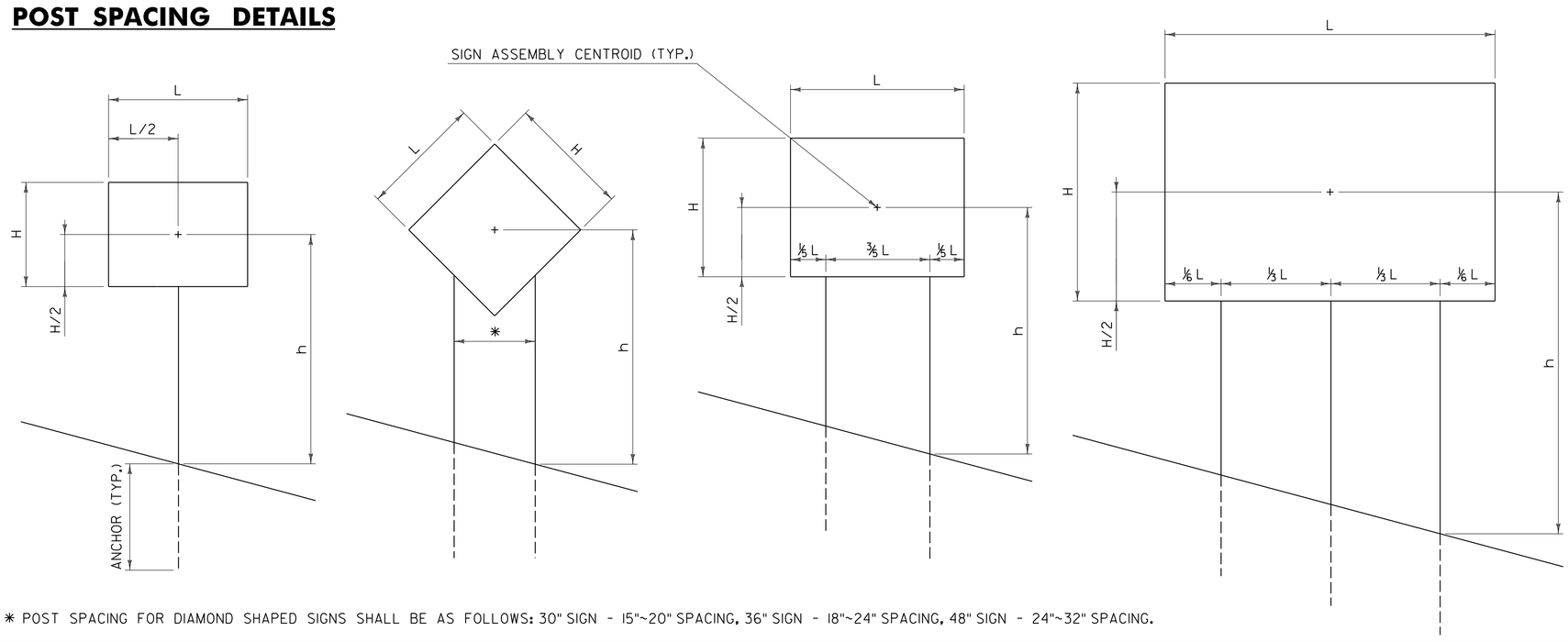

* POST SPACING FOR DIAMOND SHAPED SIGNS SHALL BE AS FOLLOWS: 30" SIGN - 15"~20" SPACING, 36" SIGN - 18"~24" SPACING, 48" SIGN - 24"~32" SPACING.

GENERAL NOTES:

1. ALL SQUARE TUBE STEEL POSTS AND ANCHORS SHALL BE FORMED INTO A SIZE AND SHAPE IN SUCH A MANNER THAT NEITHER FLASH NOR WELD SHALL INTERFERE WITH THE TELESCOPING PROPERTIES, NOR DAMAGE THE GALVANIZING.
2. ANCHORS MAY BE DRIVEN OR SET INTO A DUG HOLE AND BACKFILLED. IF DRIVEN, A DRIVING CAP SHALL BE USED. THE DUG HOLE INSTALLATION METHOD SHALL BE UTILIZED IN AREAS WITH POOR SOIL CONDITIONS OR AS DIRECTED BY THE ENGINEER. BACKFILL SHALL BE COMPACTED AS DIRECTED BY THE ENGINEER.
3. THE TOPS OF SIGN POSTS SHALL BE AT OR NEAR THE TOP OF SIGN. THE POST SHALL NOT EXTEND ABOVE THE TOP OF SIGN.
4. SIGN POSTS SHALL BE INSTALLED A MINIMUM OF ONE FOOT BELOW GROUND, INSIDE THE ANCHOR. THE LENGTH OF ANCHOR EXPOSED ABOVE GROUND SHALL NOT EXCEED FOUR INCHES.
5. ALL DIMENSIONS SHOWN IN INCHES.

OTHER STDS. REQUIRED: **NONE**

REVISIONS AND CORRECTIONS

JAN. 2, 2013 - ORIGINAL APPROVAL DATE

APPROVED

HIGHWAY SAFETY & DESIGN ENGINEER

DIRECTOR OF PROGRAM DEVELOPMENT

Mark D. Richter

FEDERAL HIGHWAY ADMINISTRATION

SQUARE TUBE SIGN POST AND ANCHOR

VERMONT AGENCY OF TRANSPORTATION

STANDARD

T-45