Casco Bay Steel Structures, Inc.

WELDING PROCEDURE SPECIFICATION

Material specification: ASTM - Gr 50 - 50W NOTE - 1
Welding process: Submerged ARC welding
Manual or machine: Machine
Position of welding: Flat - Horizontal
Filler metal specification: AWS A5-23
Filler metal classification: F8A2-ENi1K-Ni1-H8
Flux: Lincoln 960-, Elec-LA 75
Shielding gas: NA Flow rate: NA
Single or multiple pass: Single & Multiple
Single or multiple arc: Single
Welding current: DC
Polarity: DCEN
Welding progression: See Detail
Root treatment: Grind - Wire Brush - Area Free of Slag - RUST Moisture
Preheat and interpass temperature: See Table
Postheat temperature: NA
Heat Input Min 40.9 KJ/in Max 64.2 KJ/in P.Q.R #2 - 58.4 KJ/in

VTrans Received JWC
CK'D ____ OK'd BY ____
DEC 12 2013
Resubmit ____ APPROVED BY ____ DATE 12/17/13

Minimum Preheat and Interpass Temperature, °C [°F]

Welding Process (Base Metal)	To 20 mm [3/4 in] Incl.	Thickness of Thickest Part at Point of Welding, mm [in]: Over 20 mm [3/4 in] to 40 mm [1-1/2 in] Incl.	Over 40 mm [1-1/2 in] to 65 mm [2-1/2 in] Incl.	Over 65 mm [2-1/2 in]
SAW; GMAW; FCAW; SMAW (M270M [M270] [A 709M (A 709)] Gr. 250 [36], 345 [50], 345W [50W], HPS 345W [HPS 50W])	10 [50]	20 [70]	65 [150]	110 [225]
SAW; GMAW; FCAW; SMAW (M270M [M270] [A 709M (A 709)] Gr. HPS 485W [HPS 70W], 690 [100], 690W [100W])[a]	10 [50]	50 [125]	80 [175]	110 [225]

VERMONT AOT
CAVENDISH VT RTE 131
OVER TWENTYMILE STREAM
PROJ # ER BRF 0146 (13)
CBSS JOB. No. 541

WELDING PROCEDURE

Max. Interpass - 450°F

Pass no.	Electrode size	Welding current: Amperes	Volts	Travel speed
		365	32	12 IPM
	3/32	320 TO 350	30 TO 33	11 TO 14

Sec 5-13
AWS D1-5 Joint detail Fillet

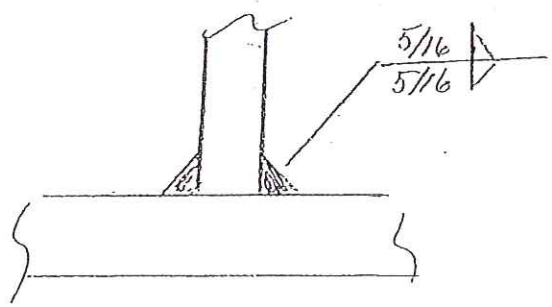

NOTE-1
use for welding Gr5-50W To GrHPS7

This procedure may vary due to fabrication sequence, fit-up, pass size, etc., within the limitation of variables given in applicable A.W.S. codes or contract specifications

Procedure no. 250 ST of VT
Revision no. ____

Contractor: Casco Bay Steel
Authorized By: Paul E. Fondale
Date: April 13 - 2012

Casco Bay Steel Structures Inc.
75 Spring Hill Road
Saco, Maine 04072
Phone: (207) 282-7360 Fax: (207) 282-1179

WELDING PROCEDURE SPECIFICATION

Material specification ASTM 709 Gr 36-50-50W (250-345-345W)
Welding process Submerged Arc welding - AUTO (SAW)
Manual or machine Machine
Position of welding Flat (1 sa. c.)
Filler metal specification AWS A5-17, AWS A5-23
Filler metal classification F8A2-EN1K-N1 Lincoln
Flux 960 Flux - Lincolnweld - LA-75 Electrode
Shielding gas NA Flow rate NA
Single or multiple pass both
Single or multiple arc single
Welding current Direct
Polarity Reverse Electrode Positive
Welding progression
Root treatment Meet AWS Specification
Preheat and interpass temperature To 3/4 (19) 50°F (10°C), 3/4" (19°) 1½ (38) - 70°F (20°C)
Postheat temperature NA
Heat Input Min 41.65 Max 65.45 PQR # 1-59.5

VTrans Received JWC
DEC 12 2013
APPROVED 12/17/13
VERMONT AOT
CAVENDISH Vt RTE 131
OVER TWENTYMILE STREAM
PROJ # ER BRF 0146 (13)
CBSS JOB. No. 541

WELDING PROCEDURE

(Metric)

Pass no.	Electrode size	Welding current Amperes	Welding current Volts	Travel speed
	5/32	605 544.5 To 665.5	29.5 27.4 To 31.56	18 15.3 To 20.7
	3.9	605 544.5 To 665.5	29.5 27.4 To 31.56	457.2 388.6 To 525.8

Joint detail AWS D1-5 B-L1-S*, B-L1a-S

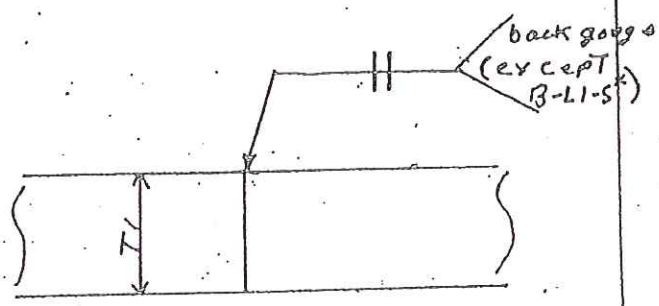

T1 = 3/8 (9.5) B-L1-S
T1 = 5/8 (15.895) B-L1a-S

*Evidence of C.U.P. is req.

This procedure may vary due to fabrication sequence, fit-up, pass size, etc., within the limitation of variables given in applicable A.W.S. codes or contract specifications

Procedure no. 203
Revision no.
Form III-2

Contractor Casco Bay Steel
Authorized By Paul E. Goodale
Date 3/12/12

WELDING PROCEDURE SPECIFICATION

Material specification ASTM - Gr 50 - 50W
Welding process Submerged Arc welding
Manual or machine Machine
Position of welding Flat + Horizontal
Filler metal specification A 5 - 23
Filler metal classification F8A2-ENi1-Ni1-H8
Flux Lincoln 960 - Elec. LA 75
Shielding gas NA Flow rate NA
Single or multiple pass Single - multiple
Single or multiple arc Single
Welding current Alternating
Polarity AC
Welding progression See Detaile
Root treatment Grind - Wire brush - Area Free of Slag - Rust - Moisture
Preheat and interpass temperature See Table
Postheat temperature NA
Heat Input Min 47.1 KJ/in Max 74.0 KJ/in PQR - PW1 - 67.3 KJ/in

Power Wave
VTrans
Received
CK'D OK'd BY JWC
DEC 12 2013
Resubmit APPROVED
BY DATE 12/17/13

Minimum Preheat and Interpass Temperature, °C [°F]

Welding Process (Base Metal)	To 20 mm [3/4 in] Incl.	Thickness of Thickest Part at Point of Welding, mm [in]: Over 20 mm [3/4 in] to 40 mm [1-1/2 in] Incl.	Over 40 mm [1-1/2 in] to 65 mm [2-1/2 in] Incl.	Over 65 mm [2-1/2 in]
SAW; GMAW; FCAW; SMAW (M270M [M270] [A 709M (A 709)] Gr. 250 [36], 345 [50], 345W [50W], HPS 345W [HPS 50W])	10 [50]	20 [70]	65 [150]	110 [225]
SAW; GMAW; FCAW; SMAW (M270M [M270] [A 709M (A 709)] Gr. HPS 485W [HPS 70W], 690 [100], 690W [100W])*	10 [50]	50 [125]	80 [175]	110 [225]

VERMONT AOT
CAVENDISH V+ RTE 131
OVER TWENTYMILE STREAM
PROJ # ER BRF 0146 (13)
CBSS JOB. No. 541

WELDING PROCEDURE

Max Interpass - 480°F

Pass no.	Electrode size	Welding current: Amperes	Volts	Travel speed
		827	38	28 IPM
AS Req.	5/32	744 TO 910	35 TO 41	24 TO 32

Sec 5.13
AWS D1-5 Joint detail BL1a-S

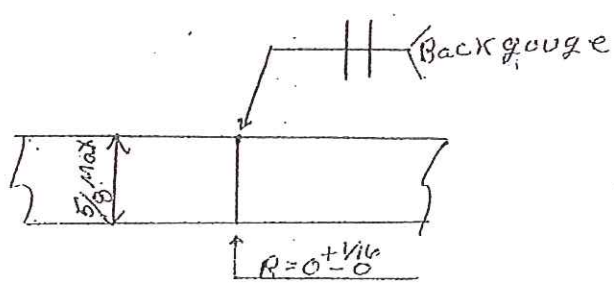

This procedure may vary due to fabrication sequence, fit-up, pass size, etc., within the limitation of variables given in applicable A.W.S. codes or contract specifications

Procedure no. PW202C - ST of VT
Revision no.

Contractor Casco Bay Steel
Authorized By Paul E. Toodale
Date April-13-2012

Casco Bay Steel Structures, Inc.

WELDING PROCEDURE SPECIFICATION

Material specification: ASTM - Gr 50 - 50W
Welding process: Submerged Arc welding — Powerwave
Manual or machine: Machine
Position of welding: Flat + Horizontal
Filler metal specification: A 5 - 23
Filler metal classification: F8A2-EN1-N1-H8
Flux: Lincoln 960 - Elec. LA 75
Shielding gas: NA — Flow rate: NA
Single or multiple pass: Single - Multiple
Single or multiple arc: Single
Welding current: Alternating
Polarity: AC
Welding progression: See Detail
Root treatment: Grind - wire brush - Area Free of Slag - Rust - Moisture
Preheat and interpass temperature: See Table
Posfheat temperature: NA
Heat Input Min 47.1 KJ/in Max 74.0 KJ/in — PQR - PW1 - 67.3 KJ/in

Vtrans Received JWC
CKD ____ OK'd BY ____
DEC 12 2013
Resubmit BY ____ APPROVED DATE 12/17/13

Minimum Preheat and Interpass Temperature, °C [°F]

Welding Process (Base Metal)	To 20 mm [3/4 in] Incl.	Over 20 mm [3/4 in] to 40 mm [1-1/2 in] Incl.	Over 40 mm [1-1/2 in] to 65 mm [2-1/2 in] Incl.	Over 65 mm [2-1/2 in]
		Thickness of Thickest Part at Point of Welding, mm [in]		
SAW; GMAW; FCAW; SMAW (M270M [M270] [A 709M (A 709)] Gr. 250 [36], 345 [50], 345W [50W], HPS 345W [HPS 50W])	10 [50]	20 [70]	65 [150]	110 [225]
SAW; GMAW; FCAW; SMAW (M270M [M270] [A 709M (A 709)] Gr. HPS 485W [HPS 70W], 690 [100], 690W [100W])*	10 [50]	50 [125]	80 [175]	110 [225]

VERMONT AOT
CAVENDISH Vt RTE 131
OVER TWENTYMILE STREAM
PROJ # ER BRF 0146 (13)
CBSS JOB. No. 541

WELDING PROCEDURE Max Interpass 460°F

Pass no.	Electrode size	Welding current Amperes	Welding current Volts	Travel speed
AS Req.	5/32	827	38	28 IPM
		744 TO 910	35 TO 41	24 TO 32

See 5.13
AWS D1-5 Joint detail BL2c-S

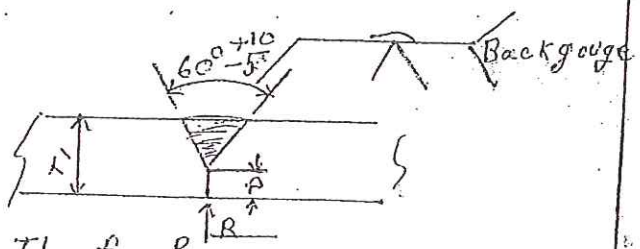

T	A	R
1/2 To 1"	1/4 Min	0
1 To 1 1/2	3/8 Min	0
1 1/2 To 2"	1/2 Min	0

This procedure may vary due to fabrication sequence, fit-up, pass size, etc., within the limitation of variables given in applicable A.W.S. codes or contract specifications

Procedure no. PW 202B ST. of VT
Revision no. ____

Contractor: Casco Bay Steel
Authorized By: Paul E. Woodale
Date: April-13-2012

WELDING PROCEDURE SPECIFICATION

Material specification: ASTM Gr 50 + 50W
Welding process: Submerged ARC Welding
Manual or machine: Machine
Position of welding: Flat + Horizontal
Filler metal specification: AWS A5-23
Filler metal classification: F8A2-ENi1K-Ni1-H8
Flux: Lincoln 960-Elec LA-75
Shielding gas: NA Flow rate: NA
Single or multiple pass: Single & Multiple
Single or multiple arc: Single
Welding current: DC
Polarity: DCEP
Welding progression: See Detail
Root treatment: Grind-Wire Brush-Area Free of Slag-Rust & Moisture
Preheat and interpass temperature: See Table
Postheat temperature: NA
Heat Input Min 51.3 KJ/in Max 73.4 KJ/in PQR-1 = 64.1 KJ/in

Vtrans Received JWC
CK'D ____ OK'd BY ____
DEC 12 2013
Resubmit BY ____ APPROVED DATE 12/17/13

Minimum Preheat and Interpass Temperature, °C [°F]

Welding Process (Base Metal)	To 20 mm [3/4 in] Incl.	Over 20 mm [3/4 in] to 40 mm [1-1/2 in] Incl.	Over 40 mm [1-1/2 in] to 65 mm [2-1/2 in] Incl.	Over 65 mm [2-1/2 in]
		Thickness of Thickest Part at Point of Welding, mm [in]		
SAW; GMAW; FCAW; SMAW (M270M [M270] [A 709M (A 709)] Gr. 250 [36], 345 [50], 345W [50W], HPS 345W [HPS 50W])	10 [50]	20 [70]	65 [150]	110 [225]
SAW; GMAW; FCAW; SMAW (M270M [M270] [A 709M (A 709)] Gr. HPS 485W [HPS 70W], 690 [100], 690W [100W])*	10 [50]	50 [125]	80 [175]	110 [225]

VERMONT AOT
CAVENDISH Vt RTE 131
OVER TWENTYMILE STREAM
PROJ # ER BRF 0146 (13)
CBSS JOB. No. 541

WELDING PROCEDURE

Max InterPass - 430°F

Pass no.	Electrode size	Welding current: Amperes	Welding current: Volts	Travel speed
		620	31	18 IPM
	5/32	570 TO 650	29 TO 33	15 TO 20

Sec 5.13
AWS D1-5 Joint detail BL-2c-S

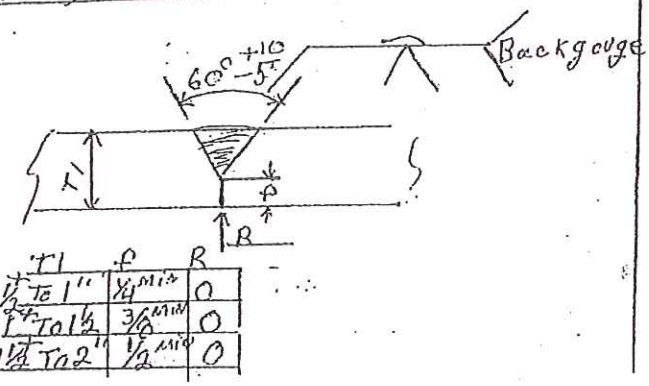

T	f	R
1/2 To 1"	1/4 Min	0
1" To 1 1/2	3/8 Min	0
1 1/2 To 2"	1/2 Min	0

This procedure may vary due to fabrication sequence, fit-up, pass size, etc., within the limitation of variables given in applicable A.W.S. codes or contract specifications

Procedure no 202B ST of VT
Revision no ____

Contractor: Cresco Bay Steel
Authorized By: Paul E. Gentili
Date: April-13-2012

Casco Bay Steel Structures, Inc.

WELDING PROCEDURE SPECIFICATION

Material specification: ASTM Gr 50 + 50W
Welding process: Submerged ARC Welding
Manual or machine: Machine
Position of welding: Flat + Horizontal
Filler metal specification: AWS A5-23
Filler metal classification: F8A2-EN1K-N1-H8
Flux: Lincoln 960-Elec LA-75
Shielding gas: N/A Flow rate: NA
Single or multiple pass: Single & Multiple
Single or multiple arc: Single
Welding current: DC
Polarity: DCEP
Welding progression: See Detail
Root treatment: Grind-Wire Brush-Area Free of Slag-Rust & Moisture
Preheat and interpass temperature: See Table
Posttheat temperature: N/A
Heat Input Min 51.3 KJ/in Max 73.4 KJ/in PQR-1-64.1 KJ/in

VTrans Received JWC
CK'D ____ CK'D BY ____
DEC 12 2013
Resubmit ____ APPROVED ____
BY ____ DATE 12/17/13

Minimum Preheat and Interpass Temperature, °C [°F]

Welding Process (Base Metal)	To 20 mm [3/4 in] Incl.	Over 20 mm [3/4 in] to 40 mm [1-1/2 in] Incl.	Over 40 mm [1-1/2 in] to 65 mm [2-1/2 in] Incl.	Over 65 mm [2-1/2 in]
		Thickness of Thickest Part at Point of Welding, mm [in]		
SAW; GMAW; FCAW; SMAW (M270M [M270] [A 709M (A 709)] Gr. 250 [36], 345 [50], 345W [50W], HPS 345W [HPS 50W])	10 [50]	20 [70]	65 [150]	110 [225]
SAW; GMAW; FCAW; SMAW (M270M [M270] [A 709M (A 709)] Gr. HPS 485W [HPS 70W], 690 [100], 690W [100W])'	10 [50]	50 [125]	80 [175]	110 [225]

VERMONT AOT
CAVENDISH VT RTE 131
OVER TWENTYMILE STREAM
PROJ # ER BRF 0146 (13)
CBSS JOB. NO. 541

WELDING PROCEDURE

Pass no.	Electrode size	Welding current: Amperes	Welding current: Volts	Travel speed
		620	31	18 IPM
	5/32	570 TO 650	29 TO 33	15 TO 20

See 5.13
AWS D1-5 Joint detail: Fillet

2F

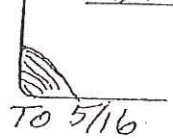

To 5/16

1F

To 1/2

This procedure may vary due to fabrication sequence, fit-up, pass size, etc., within the limitation of variables given in applicable A.W.S. codes or contract specifications

Procedure no. 201 - ST OF VT.
Revision no. ____
Contractor: Casco Bay Steel
Authorized By: Paul E. Gordeli
Date: April-13-2012

Casco Bay Steel Structures, Inc.

WELDING PROCEDURE SPECIFICATION

Material specification ASTM Gr 50-50W
Welding process Shielded Metal ARC
Manual or machine Manual
Position of welding Flat, Horizontal
Filler metal specification ANSI/AWS A5.1-A5-5
Filler metal classification E7018 - E8018 C1/C3
Flux NA
Shielding gas NA Flow rate NA
Single or multiple pass single & multiple
Single or multiple arc Single
Welding current AC/DC
Polarity Straight & Reverse
Welding progression See Detail
Root treatment Grind-Wire brush-Area Free of Slag-Rust-Moisture
Preheat and interpass temperature
Postheat temperature NA
Heat Input Min NA Max NA

VTrans Received CK'D OK'd BY JWC
DEC 12 2013
Resubmit BY APPROVED DATE 12/17/13

Minimum Preheat and Interpass Temperature, °C [°F]

Welding Process (Base Metal)	To 20 mm [3/4 in] Incl.	Thickness of Thickest Part at Point of Welding, mm [in]: Over 20 mm [3/4 in] to 40 mm [1-1/2 in] Incl.	Over 40 mm [1-1/2 in] to 65 mm [2-1/2 in] Incl.	Over 65 mm [2-1/2 in]
SAW; GMAW; FCAW; SMAW (M270M [M270] [A 709M (A 709)] Gr. 250 [36], 345 [50], 345W [50W], HPS 345W [HPS 50W])	10 [50]	20 [70]	65 [150]	110 [225]

VERMONT AOT
CAVENDISH Vt RTE 131
OVER TWENTYMILE STREAM
PROJ # ER BRF 0146 (13)
CBSS JOB. No. 541

WELDING PROCEDURE

Pass no.	Electrode size	Welding current: Amperes	Volts	Travel speed	AWS D1-5 Joint detail Fillet
	7018				2F
AS	1/8	70 To 170	22-26		
	5/32	120 To 225	22-26	AS	
ReQ	3/16	170 To 300	24-27	ReQ	3/16 To 5/16
	8018				1F
	1/8	90 To 160	22-26		
	5/32	120 To 225	22-26		
	3/16	180 To 290	24-27		3/16 To 3/8

This procedure may vary due to fabrication sequence, fit-up, pass size, etc., within the limitation of variables given in applicable A.W.S. codes or contract specifications

Procedure no. 401
Revision no.

Contractor Casco Bay Steel
Authorized By [signature]
Date April 13 - 2012