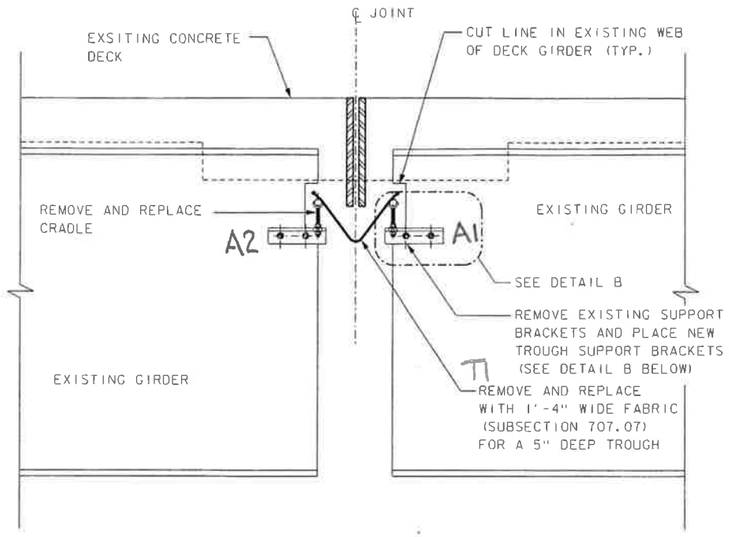

TYPICAL SECTION AT EXISTING DIAPER DRAIN

SCALE: 1" = 1'-0"

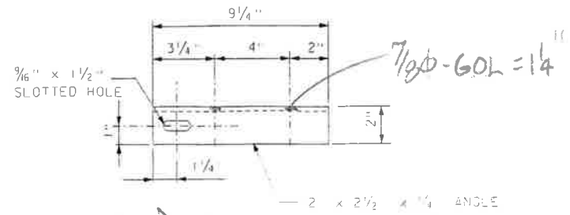

(15)~A1 - AS SHOWN

(15)~A2 - OPP HAND

(A36 - GALV)

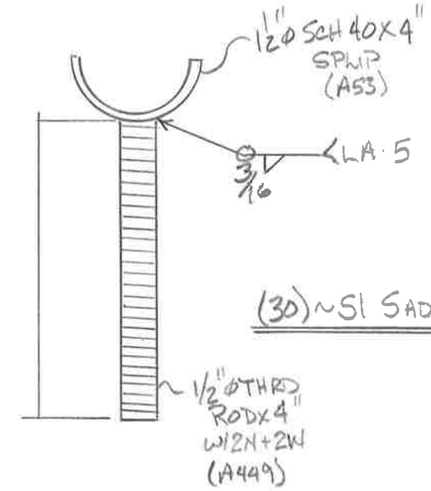

(30)~S1 SADDLES

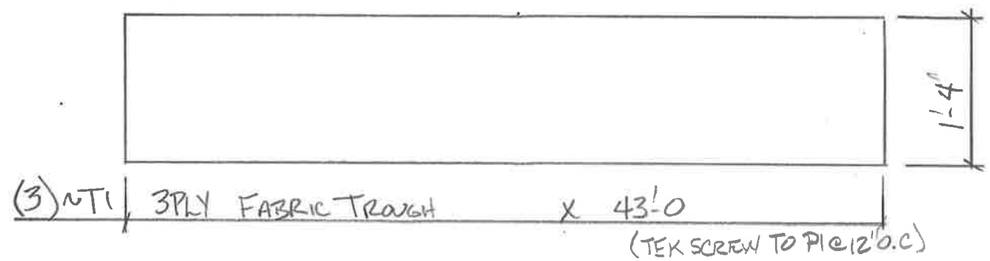

(3)~T1 | 3PLY FABRIC TROUGH x 43'-0

(TEK SCREW TO P1 @ 12" O.C)

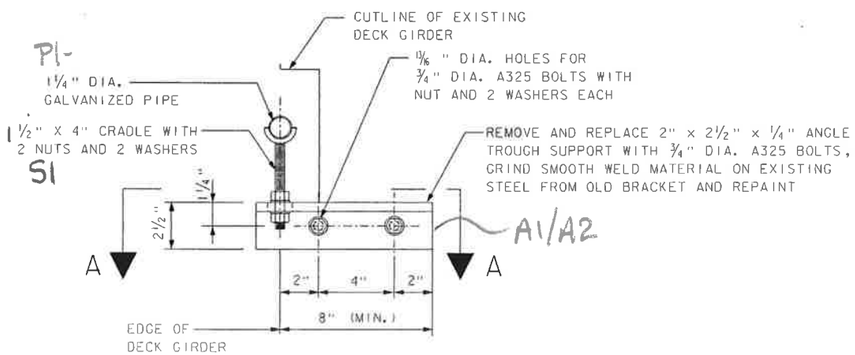

DETAIL B

3" = 1'-0"

DIAPER DRAIN REPAIR DETAILS

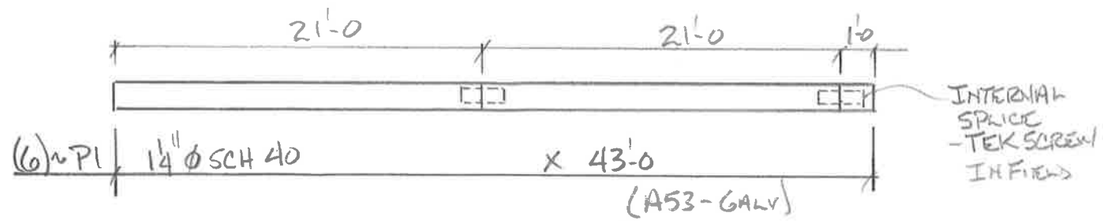

(6)~P1 | 1¼"Φ SCH 40 x 43'-0

(A53 - GALV)

FIELD BOLTS

-(60)~3/4 X 2" A325 BOLT W/N+W

-(280)~#12 TEK SCREW X 3/4"

Vermont Agency of Transportation

Revised Bridge 2 Trough Shop Drawings.pdf

RECEIVED

ON: June 8, 2015

and Checked for

CONFORMANCE

BY: mark sargent DATE: 7/1/2015

REV. NO.	DATE	DESCRIPTION
1	6/14	WELD

HOLES: 13/16"Φ (U.N.O.) DATE:

PAINT: GALV A123

DRAIN TROUGHS

DATE SUB.	PROJECT	CASTLETON BF BRNT (15) BR. #2
	LOCATION	
	ARCHITECT	
DATE APP.	ENGINEER	
DATE DIST.	CUSTOMER	MODERN PROTECTIVE COATING

MERRIMACK

MISCELLANEOUS IRON STRUCTURAL STEEL FABRICATORS

MERRIMACK SHEET METAL
119 HALL ST.
CONCORD, N.H., 03301
TEL. (603) 224-7766
FAX. (603) 224-7925

DR BY JD

REV BY RC

JOB NO. 6117

DWG NO. T1