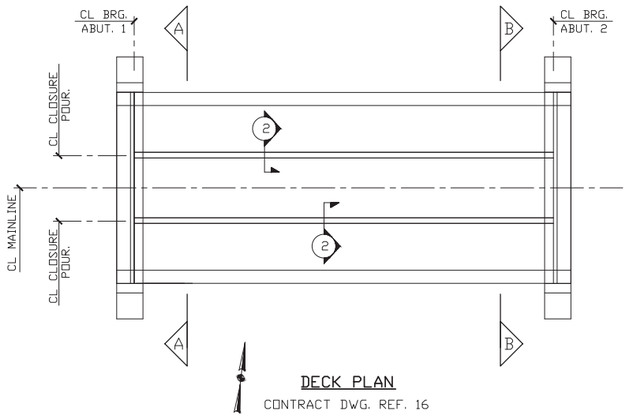

DECK PLAN
CONTRACT DWG. REF. 16

Release Number:						BAR LIST ⚠1										
Bar Mark	Qty	Size	Total Length	Type	'A'	'B'	'C'	'D'	'E'	'F'	'G'	'H'	'J'	'K'	'O'	'R'
5CZ01	54	#5	6'-2"	17		1'-7"	3'-0"	1'-7"								
5CZ02	16	#5	3'-3"	T2		0'-9 1/2"	1'-4 1/2"	0'-7"	0'-6"							
6CZ01	104	#6	4'-0"	17		2'-0"	2'-0"									

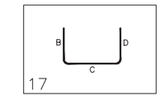

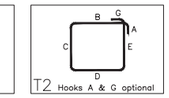

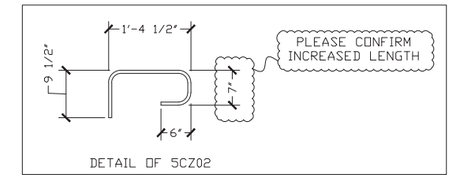

DETAIL OF 5CZ02

⚠1 BAR MARKS MAY CHANGE, DUE TO REVISIONS

LEGEND:
CONT.-CONTINUOUS
TRANS.-TRANSVERSE
DWLS.-DOWELS
VERTS.-VERTICAL
HORIZ.-HORIZONTAL
T&B -TOP & BOTTOM
I.F.-INNER FACE
O.F.-OUTER FACE
E.E.-EACH END
E.F.-EACH FACE
N.F.-NEAR FACE
F.F.-FAR FACE
E.W.-EACH WAY
O.C.-ON CENTER
L.W.-LONG WAY
S.W.-SHORT WAY

FOR APPROVAL

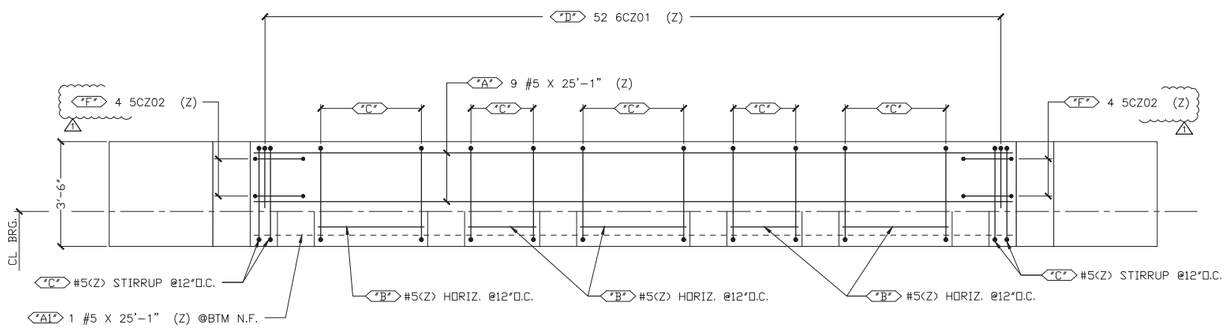

ABUTMENT #1 & #2 PLAN
CONTRACT DWG. REF. 19 & 21

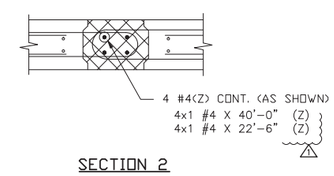

SECTION 2
(2 THUS)
CONTRACT DWG. REF. 17

⚠2

LAP CHART	
#4	2'-2" (U.N.)
#5	2'-7" (U.N.)
#6	3'-5" (U.N.)

ALL REINF. BARS
LEVEL II - DUAL COATED

ELEVATIONS & DIMENSIONS SHOWN ON THIS DWG. ARE FOR REINF. DETAILING PURPOSES ONLY AND ARE NOT INTENDED FOR DIMENSIONAL CONSTRUCTION.

DUAL COATED REINF. BARS ASTM A615 GRADE 60, MARKED (Z)

VERIFICATION OF UNCLEAR INFORMATION MAY BE REQUESTED ON THIS DRAWING. SHOULD VERIFICATION BE LEFT UN-ADDRESSED IT WILL REMAIN AS SHOWN AND ASSUME TO BE CORRECT.

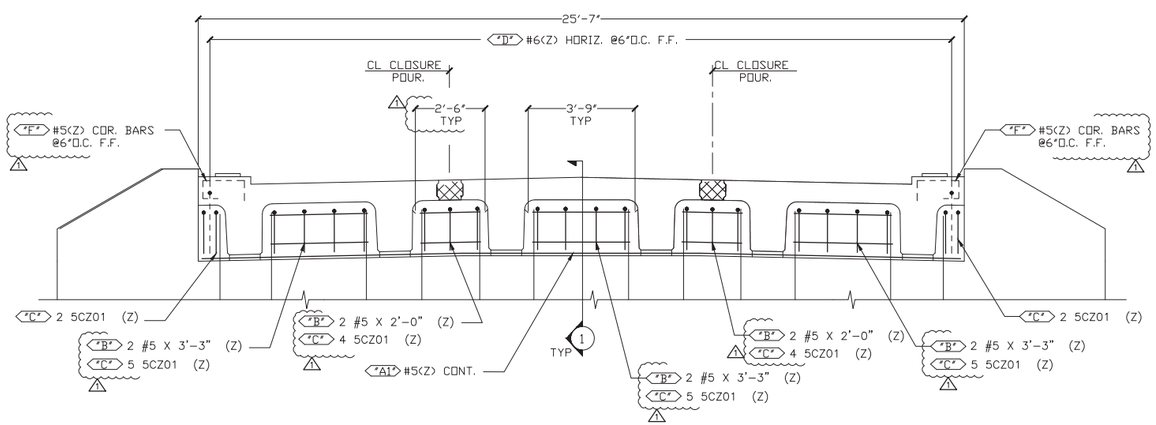

ABUTMENT #1 - ELEVATION A-A
ABUTMENT #2 - ELEVATION B-B
(PILE CAVITIES NOT SHOWN FOR CLARITY)
CONTRACT DWG. REF. 19 & 21

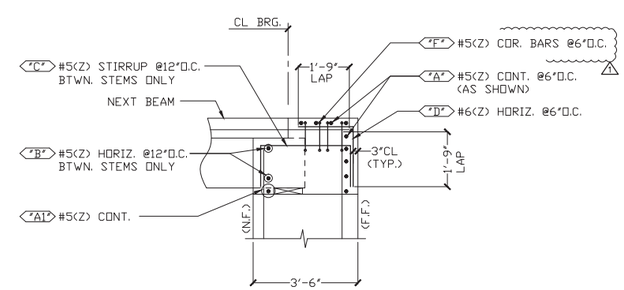

SECTION 1
CONTRACT DWG. REF. 19 & 21

Vermont Agency of Transportation
RECEIVED
Cambridge MPO-VAQ/RPC-TRPC Closure Pour Submittal 2-27-2015.pdf
CK'D BY JS OK'D BY GL
February 27, 2015
RESUBMIT NO Approved
BY KH DATE 3-2-2015

6			
5			
4			
3			
2	2/27/15	⚠1	REVISED PER APPROVAL
1	1/29/15	–	FOR APPROVAL
	DATE	REV.#	SENT FOR

DIMENSION
DIMENSION FABRICATORS INC.
2000 7TH STREET
SCOTIA, N.Y. 12302
PH: (518) 374-1936
FAX (518) 374-4830
www.dimensionfabricators.com

STRUCTURE	VTAOT CAMBRIDGE BRO 1448(39)
LOCATION	CAMBRIDGE, VERMONT
ARCHITECT	
ENGINEER	
CUSTOMER	BLOW & COTE, INC.

DRAWN BY	DATE	DFI #
KRIS J	1/23/15	9127

DRAWING COVERS	DRAWING #
CLOSURE POURS	C