STATE OF VERMONT
AGENCY OF TRANSPORTATION

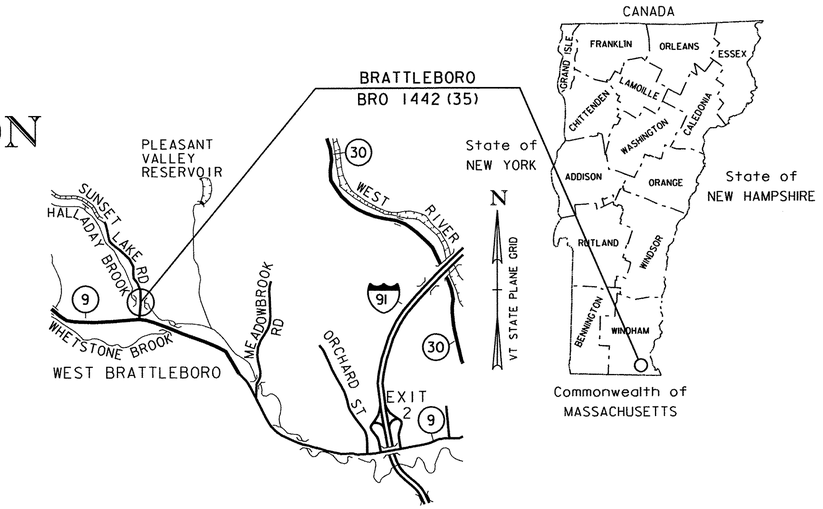

LOCATION MAP
NOT TO SCALE

PROPOSED IMPROVEMENT
BRIDGE PROJECT
TOWN OF BRATTLEBORO
COUNTY OF WINDHAM
TH 12, CLASS III (LOCAL ROAD), BRIDGE NO. 7

PROJECT LOCATION: LOCATED IN THE COUNTY OF WINDHAM, TOWN OF BRATTLEBORO, ON SUNSET LAKE ROAD (TH 12); BRIDGE NO. 7 OVER HALLADAY BROOK, APPROXIMATELY 0.20 MILES NORTH OF THE INTERSECTION OF VT 9 AND SUNSET LAKE RD (TH 12).

PROJECT DESCRIPTION: WORK TO BE PERFORMED UNDER THIS PROJECT INCLUDES REMOVAL AND REPLACEMENT OF BRIDGE NO. 7, ON THE EXISTING ALIGNMENT, WITH ASSOCIATED ROADWAY AND CHANNEL WORK.

LENGTH OF ROADWAY: 272.17 FEET
LENGTH OF BRIDGE: 47.83 FEET
LENGTH OF PROJECT: 320.00 FEET

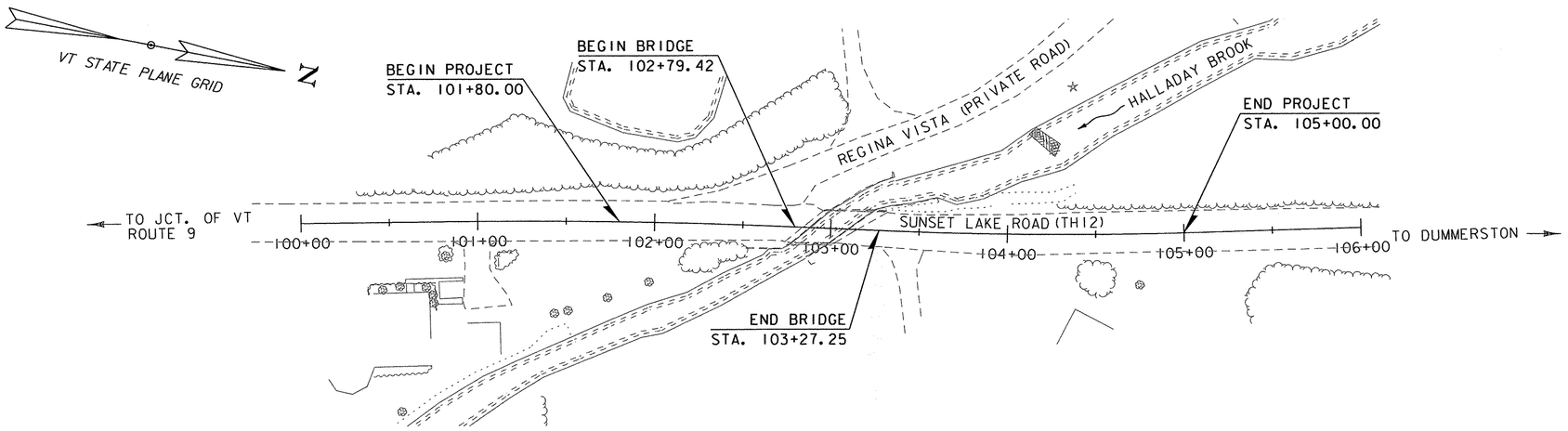

SCALE 1" = 40'-0"
40 0 40

THESE PLANS ARE SUBJECT TO SUCH ENGINEERING CHANGES AS MAY BE REQUIRED BY THE FEDERAL HIGHWAY ADMINISTRATION OR THE DIRECTOR OF PROGRAM DEVELOPMENT.

CONSTRUCTION IS TO BE CARRIED ON IN ACCORDANCE WITH THESE PLANS AND THE STANDARD SPECIFICATIONS FOR CONSTRUCTION DATED 2011, AS APPROVED BY THE FEDERAL HIGHWAY ADMINISTRATION ON JULY 20, 2011 FOR USE ON THIS PROJECT, INCLUDING ALL SUBSEQUENT REVISIONS AND SUCH REVISED SPECIFICATIONS AND SPECIAL PROVISIONS AS ARE INCORPORATED IN THESE PLANS.

STATE OF VERMONT
STATE E. BURGESS
10-14-2013
No. 7686
Structural I
LICENSED PROFESSIONAL ENGINEER

QUALITY ASSURANCE PROGRAM : LEVEL 2

SURVEYED BY : VHB
SURVEYED DATE : NOV 2010

DATUM
VERTICAL NAVD 88
HORIZONTAL NAD 83 (07)

VHB Vanasse Hangen Brustlin, Inc.

DIRECTOR OF PROGRAM DEVELOPMENT
APPROVED Kevin J. Marshia DATE 10/15/13

PROJECT MANAGER : TODD A. SUMNER, P.E.

PROJECT NAME : BRATTLEBORO
PROJECT NUMBER : BRO 1442 (35)

SHEET 1 OF 68 SHEETS

VHB 57428

STATE OF VERMONT
AGENCY OF TRANSPORTATION

PRELIMINARY INFORMATION SHEET (BRIDGE)

Version 11.06.15

LRFD

INDEX OF SHEETS

PLAN SHEETS

1	TITLE SHEET
2	PRELIMINARY INFORMATION SHEET
3	TYPICAL BRIDGE SECTION
4	TYPICAL ROADWAY SECTIONS
5	TYPICAL EARTHWORK SECTIONS
6 - 7	PROJECT NOTES
8 - 9	QUANTITY SHEETS
10	BRIDGE QUANTITY SHEET
11	CONVENTIONAL SYMBOLOGY LEGEND
12	TIE SHEET
13	ALIGNMENT LAYOUT SHEET
14	LAYOUT SHEET
15	PROFILE SHEET
16 - 18	TRAFFIC CONTROL PLANS
19	PLANTING PLAN
20	PLANTING AREA 1 PLAN AND SCHEDULE
21	PLANTING AREA 2 PLAN AND SCHEDULE
22	PLANTING DETAILS
23	TRAFFIC SIGNS & LINE STRIPING SHEET
24	TRAFFIC SIGN SUMMARY SHEET
25	BORING INFORMATION SHEET
26 - 28	BORING LOGS
29	PLAN AND ELEVATION
30	FRAMING PLAN
31 - 32	NON-VOIDED SLAB DETAILS TYPE I
33 - 34	NON-VOIDED SLAB DETAILS TYPE II
35 - 36	NON- VOIDED SLAB DETAILS TYPE III
37	PRESTRESSED BEAM DETAILS
38	OVERLAY REINFORCING DETAILS
39	BEARING DETAILS
40	APPROACH SLAB DETAILS
41	ABUTMENT NO. 1 PLAN & ELEVATION
42	WINGWALL NO. 1 ELEVATION & DETAILS
43	WINGWALL NO. 2 ELEVATION & DETAILS
44	ABUTMENT NO. 1 FOOTING PLAN
45	ABUTMENT NO. 2 PLAN & ELEVATION
46	WINGWALL NO. 3 ELEVATION & DETAILS
47	WINGWALL NO. 4 ELEVATION & DETAILS
48	ABUTMENT NO. 2 FOOTING PLAN
49 - 50	REINFORCING STEEL SCHEDULES
51	BRIDGE RAIL DETAILS
52	BRIDGE RAIL LAYOUT SHEET
53 - 56	ROADWAY CROSS SECTIONS
57 - 59	CHANNEL CROSS SECTIONS
60	EPSC NARRATIVE
61	EPSC EXISTING CONDITIONS PLAN
62	EPSC CONSTRUCTION CONDITIONS PLAN
63	EPSC FINAL CONDITIONS PLAN
64 - 66	EROSION CONTROL DETAILS
67	R.O.W. DETAIL SHEET #1
68	ROW LAYOUT SHEET 1 OF 1

STANDARDS LIST

E-121	STANDARD SIGN PLACEMENT - CONVENTIONAL ROAD	08-08-1995
G-1	STEEL BEAM GUARDRAIL DETAILS (POST, DELINEATOR, TYPICALS)	01-03-2000
G-1D	STEEL BEAM GUARDRAIL DETAILS (END TERMINAL, ANCHOR, MEDIAN)	01-03-2000
S-367B	GUARDRAIL APPROACH SECTION, GALVANIZED HD STEEL BEAM	05-24-2012
T-1	TRAFFIC CONTROL GENERAL NOTES	08-06-2012
T-10	CONVENTIONAL ROADS CONSTRUCTION APPROACH SIGNING	08-06-2012
T-30	CONSTRUCTION SIGN DETAILS	08-06-2012
T-35	CONSTRUCTION ZONE LONGITUDINAL DROP-OFFS	08-06-2012
T-36	CONSTRUCTION ZONE LONGITUDINAL DROP-OFFS FOR PAVING	08-06-2012

STRUCTURES DETAILS

SD-501.00	CONCRETE DETAILS AND NOTES	05-10-2010
SD-502.00	CONCRETE DETAILS AND NOTES	06-04-2010
SD-516.10	BRIDGE JOINT ASPHALTIC PLUG	05-07-2010

FINAL HYDRAULIC REPORT

HYDROLOGIC DATA

Date: 5/31/2013

DRAINAGE AREA : 5.5 sq. mi.
CHARACTER OF TERRAIN : Hilly to mountainous, mostly forested
STREAM CHARACTERISTICS : Sinuous, slightly incised with minimal floodplain
NATURE OF STREAMBED : Gravel, cobbles, boulders and ledge

PEAK FLOW DATA

Q 2.33 =	300 cfs	Q 50 =	1100 cfs
Q 10 =	650 cfs	Q 100 =	1275 cfs
Q 25 =	900 cfs	Q 500 =	1785 cfs

DATE OF FLOOD OF RECORD: 1927
ESTIMATED DISCHARGE: Unknown
WATER SURFACE ELEV.: Unknown
NATURAL STREAM VELOCITY : @ Q25 = 5.8 fps
ICE CONDITIONS : Moderate
DEBRIS: Moderate
DOES THE STREAM REACH MAXIMUM HIGHWATER ELEV. RAPIDLY? Yes
IS ORDINARY RISE RAPID? Yes
IS STAGE AFFECTED BY UPSTREAM OR DOWNSTREAM CONDITIONS? No
IF YES, DESCRIBE:

WATERSHED STORAGE: < 1 %
HEADWATERS:
UNIFORM: X
IMMEDIATELY ABOVE SITE:

EXISTING STRUCTURE INFORMATION

STRUCTURE TYPE: Single span concrete encased steel beam bridge
YEAR BUILT: 1920
CLEAR SPAN(NORMAL TO STREAM): 11'-6"
VERTICAL CLEARANCE ABOVE STREAMBED: 5'-0"
WATERWAY OF FULL OPENING: 54.5 sq. ft.
DISPOSITION OF STRUCTURE: Remove and replace structure
TYPE OF MATERIAL UNDER SUBSTRUCTURE: See borings

WATER SURFACE ELEVATIONS AT:

Q2.33 =	538.1 ft	VELOCITY =	9.1 fps
Q10 =	542.1 ft	"	9.5 fps
Q25 =	542.6 ft	"	9.7 fps
Q50 =	542.7 ft	"	10.8 fps
Q100 =	543.1 ft	"	8.5 fps

LONG TERM STREAMBED CHANGES: None noted

IS THE ROADWAY OVERTOPPED BELOW Q100: Yes
FREQUENCY: Q10
RELIEF ELEVATION: 539.6
DISCHARGE OVER ROAD @Q100: 182 cfs

UPSTREAM STRUCTURE

TOWN: Brattleboro
DISTANCE: 8450 ft
HIGHWAY # : TH 4 (Halladay Brook Road)
STRUCTURE #: 16
CLEAR SPAN: 20'
CLEAR HEIGHT: 9'
YEAR BUILT: 2005
FULL WATERWAY:
STRUCTURE TYPE: Single span concrete slab

DOWNSTREAM STRUCTURE

TOWN: Brattleboro
DISTANCE: 1340'
HIGHWAY # : Private Road (Winding Hill Road)
STRUCTURE #: Private
CLEAR SPAN:
CLEAR HEIGHT:
YEAR BUILT:
FULL WATERWAY:
STRUCTURE TYPE:

PROPOSED STRUCTURE

STRUCTURE TYPE: Single span precast, prestressed concrete non-voided slab bridge

CLEAR SPAN(NORMAL TO STREAM): 25'-0"
VERTICAL CLEARANCE ABOVE STREAMBED: 6'-0"
WATERWAY OF FULL OPENING: 129.4 sq. ft.

WATER SURFACE ELEVATIONS AT:

Q2.33 =	536.3 ft	VELOCITY=	8.4 fps
Q10 =	537.9 ft	"	9.8 fps
Q25 =	538.8 ft	"	10.5 fps
Q50 =	539.5 ft	"	11.2 fps
Q100 =	541.2 ft	"	9.3 fps

IS THE ROADWAY OVERTOPPED BELOW Q100: No
FREQUENCY: Above Q100
RELIEF ELEVATION: 541.1 ft
DISCHARGE OVER ROAD @Q100: None

AVERAGE LOW ELEVATION OF SUPERSTRUCTURE: 539.2 ft
VERTICAL CLEARANCE: @ Q25 = 0.4 ft

SCOUR: Footings are bearing on bedrock

REQUIRED CHANNEL PROTECTION: Stone Fill, Type III

PERMIT INFORMATION

AVERAGE DAILY FLOW:	10 cfs	DEPTH OR ELEVATION:
ORDINARY LOW WATER:	2 cfs	0.5 ft
ORDINARY HIGH WATER:	80 cfs	2.0 ft

TEMPORARY BRIDGE REQUIREMENTS

STRUCTURE TYPE: Single span bridge*
CLEAR SPAN (NORMAL TO STREAM): 44'-0"
VERTICAL CLEARANCE ABOVE STREAMBED: 4'-0"
WATERWAY AREA OF FULL OPENING: 176 sq. ft.

ADDITIONAL INFORMATION

*The temporary bridge may be in place through the winter.

TRAFFIC MAINTENANCE NOTES

1. MAINTAIN ONE-WAY ALTERNATING TRAFFIC ON A TEMPORARY BRIDGE.
2. TRAFFIC SIGNALS ARE NECESSARY.
3. SIDEWALKS ARE NOT NECESSARY
4. THE APPROACHES FOR THE TEMPORARY BRIDGE SHALL BE PAVED.

DESIGN VALUES

1. DESIGN LIVE LOAD		HL-93
2. FUTURE PAVEMENT	d_p:	3.0 INCH
3. DESIGN SPAN	L:	45.00 FT
4. MIN. MID-SPAN POS. CAMBER @ RELEASE (PRESTRESSED UNITS)	Δ:	SEE NOTES
5. PRESTRESSING STRAND (0.60 INCH DIAMETER - LOW RELAX)	f_y:	270 KSI
6. PRESTRESSED CONCRETE STRENGTH	f'_c:	6.0 KSI
7. PRESTRESSED CONCRETE RELEASE STRENGTH	f'_{ci}:	4.8 KSI
8. CONCRETE, HIGH PERFORMANCE CLASS AA	f'_c:	4.0 KSI
9. CONCRETE, HIGH PERFORMANCE CLASS A	f'_c:	4.0 KSI
10. CONCRETE, HIGH PERFORMANCE CLASS B	f'_c:	3.5 KSI
11. CONCRETE, CLASS C	f'_c:	- - -
12. REINFORCING STEEL	f_y:	60 KSI
13. STRUCTURAL STEEL AASHTO M270	f_y:	- - -
14. SOIL UNIT WEIGHT	γ:	0.140 KCF
15. NOMINAL BEARING RESISTANCE OF SOIL	q_n:	- - -
16. SOIL BEARING RESISTANCE FACTOR (REFER TO AASHTO LRFD)	ϕ:	- - -
17. NOMINAL BEARING RESISTANCE OF ROCK	q_n:	70.0 KSF
18. ROCK BEARING RESISTANCE FACTOR (REFER TO AASHTO LRFD)	ϕ:	0.45
19. NOMINAL AXIAL PILE RESISTANCE	q_p:	- - -
20. PILE YIELD STRENGTH ASTM A572	f_y:	- - -
21. PILE SIZE		- - -
22. EST. PILE LENGTH	L_p:	
23. PILE RESISTANCE FACTOR	ϕ:	- - -
24. LATERAL PILE DEFLECTION	Δ:	- - -
25. BASIC WIND SPEED	V_{3s}:	- - -
26. MINIMUM GROUND SNOW LOAD	p_g:	- - -
27. SEISMIC DATA PGA: - - -	S_s:	- - -
	S_1:	- - -

LRFR LOAD RATING FACTORS

LOADING LEVELS	TRUCK						
	H-20	HL-93	3S2	6 AXLE	3A. STR.	4A. STR.	5A. SEMI
TONNAGE	20	36	36	66	30	34.5	38
INVENTORY	2.59	1.27					
POSTING							
OPERATING	3.84	1.91	3.39	1.41	2.38	2	2.48
COMMENTS:							

AS BUILT "REBAR" DETAIL

LEVEL I	LEVEL II	LEVEL III
TYPE:	TYPE:	TYPE:
GRADE:	GRADE:	GRADE:

TRAFFIC DATA

YEAR	ADT	DHV	% D	% T	ADTT
2012	460	50	76	2.1	10
2032	490	55	76	3.6	20

20 year ESAL for flexible pavement from 2012 to 2032 : 40000
40 year ESAL for flexible pavement from 2012 to 2052 : 93000
Design Speed : 25 mph

TEMPORARY BRIDGE PROFILE ALONG TEMP CL

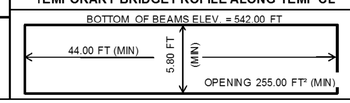

VHB Vanasse Hangen Brustlin, Inc.

PROJECT NAME: **BRATTLEBORO**
PROJECT NUMBER: **BRO 1442(35)**

FILE NAME:	z10j062pi.dgn	PLOT DATE:	10/14/2013
PROJECT LEADER:	S.E. BURBANK	DRAWN BY:	E.A. FIALA
DESIGNED BY:	VHB	CHECKED BY:	S.E. BURBANK
PRELIMINARY INFORMATION SHEET		SHEET	2 OF 68

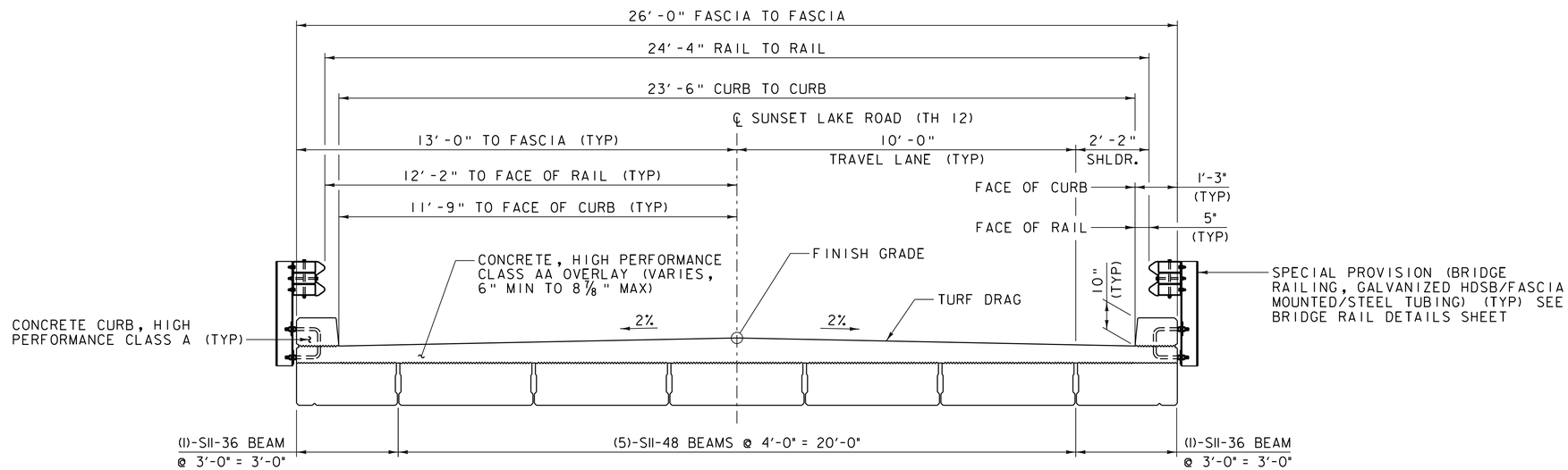

TYPICAL BRIDGE SECTION

SCALE 1/2" = 1'-0"

Vanasse Hangen Brustlin, Inc.

PROJECT NAME: BRATTLEBORO	
PROJECT NUMBER: BRO 1442(35)	
FILE NAME: z10j062typ.dgn	PLOT DATE: 10/14/2013
PROJECT LEADER: S.E. BURBANK	DRAWN BY: B.J. MASSE
DESIGNED BY: S.E BURBANK	CHECKED BY: S.E. BURBANK
TYPICAL BRIDGE SECTION	SHEET 3 OF 68

VHB 57428

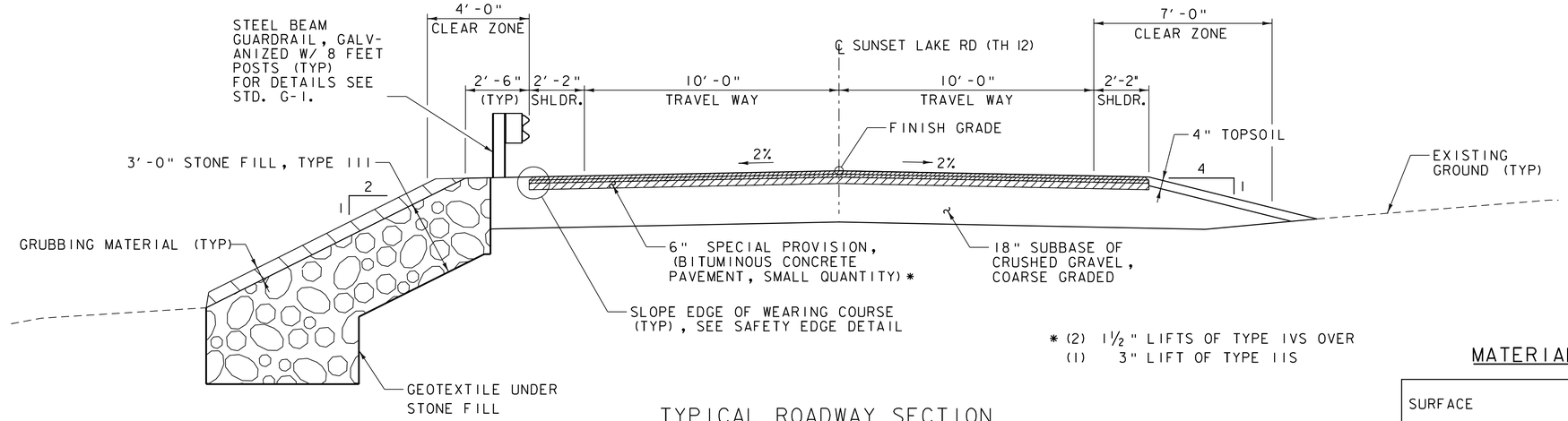

* (2) 1½" LIFTS OF TYPE IVS OVER
(1) 3" LIFT OF TYPE IIS

TYPICAL ROADWAY SECTION

SCALE ⅜" = 1'-0"

MATERIAL TOLERANCES

SURFACE	
- PAVEMENT (TOTAL THICKNESS)	+/- ¼"
- SUBBASE	+/- 1"

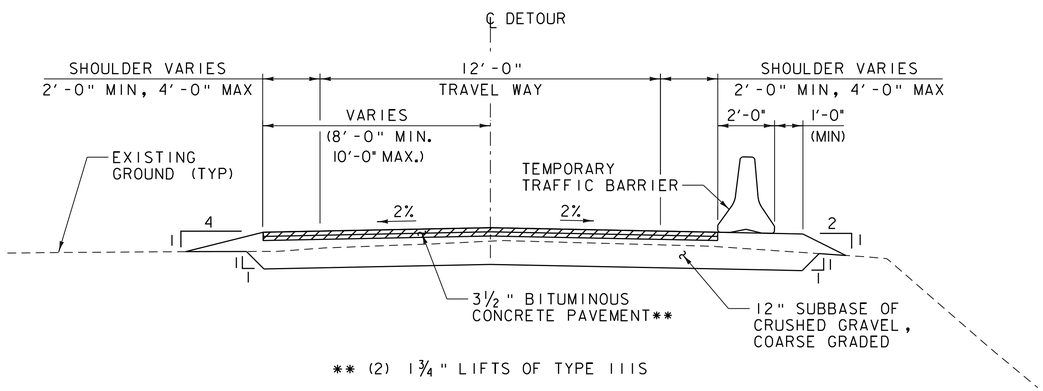

** (2) 1¾" LIFTS OF TYPE IIIS

NOTE: ALL WORK ASSOCIATED WITH THE INSTALLATION AND REMOVAL OF THE DETOUR WILL BE INCLUDED IN THE UNIT PRICE BID FOR CONTRACT ITEM 528.10.

TYPICAL ONE-WAY DETOUR ROADWAY SECTION

SCALE ⅜" = 1'-0"

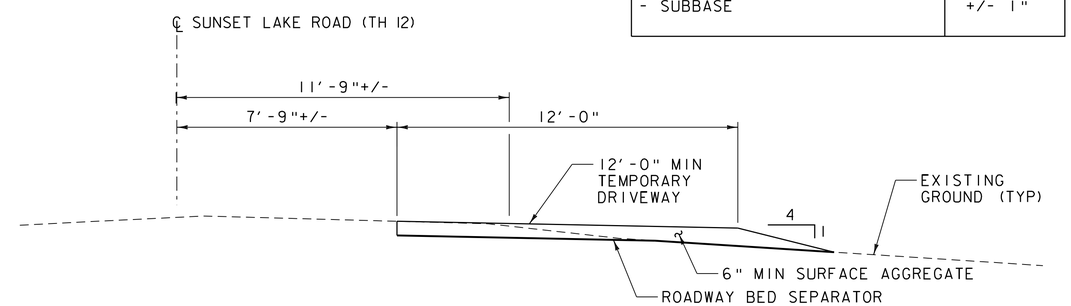

NOTE: ALL WORK ASSOCIATED WITH THE INSTALLATION AND REMOVAL OF THE TEMPORARY DRIVEWAY WILL BE INCLUDED IN THE UNIT PRICE BID FOR CONTRACT ITEM 528.10.

TYPICAL TEMPORARY DRIVEWAY SECTION

SCALE ⅜" = 1'-0"

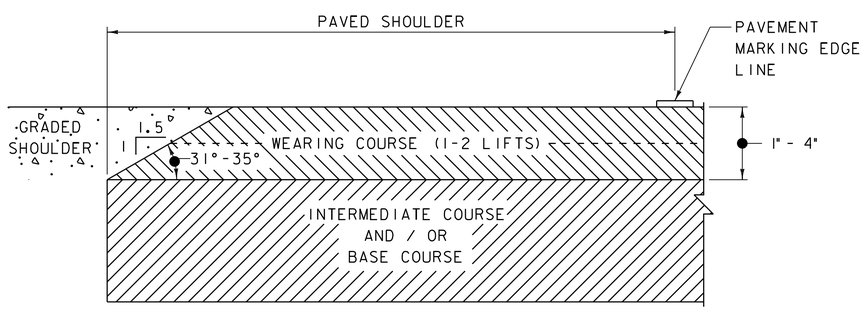

NOTE: COST FOR FORMING AND COMPACTING SAFETY EDGE SHALL BE INCIDENTAL TO ITEM 900.680, "SPECIAL PROVISION (BITUMINOUS CONCRETE PAVEMENT, SMALL QUANTITY)".

SAFTEY EDGE DETAIL

NOT TO SCALE

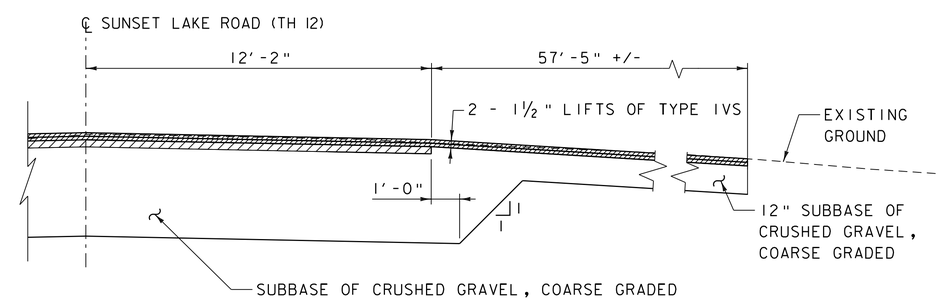

NOTE: SEE TYPICAL ROADWAY SECTION FOR INFORMATION NOT SHOWN.

TYPICAL DRIVEWAY SECTION

SCALE ⅜" = 1'-0"

VHB Vanasse Hangen Brustlin, Inc.

PROJECT NAME: BRATTLEBORO	
PROJECT NUMBER: BRO 1442(35)	
FILE NAME: z10j062typ.dgn	PLOT DATE: 10/14/2013
PROJECT LEADER: S.E. BURBANK	DRAWN BY: B.J. MASSE
DESIGNED BY: S.E BURBANK	CHECKED BY: S.E. BURBANK
TYPICAL ROADWAY SECTIONS	SHEET 4 OF 68

VHB 57428

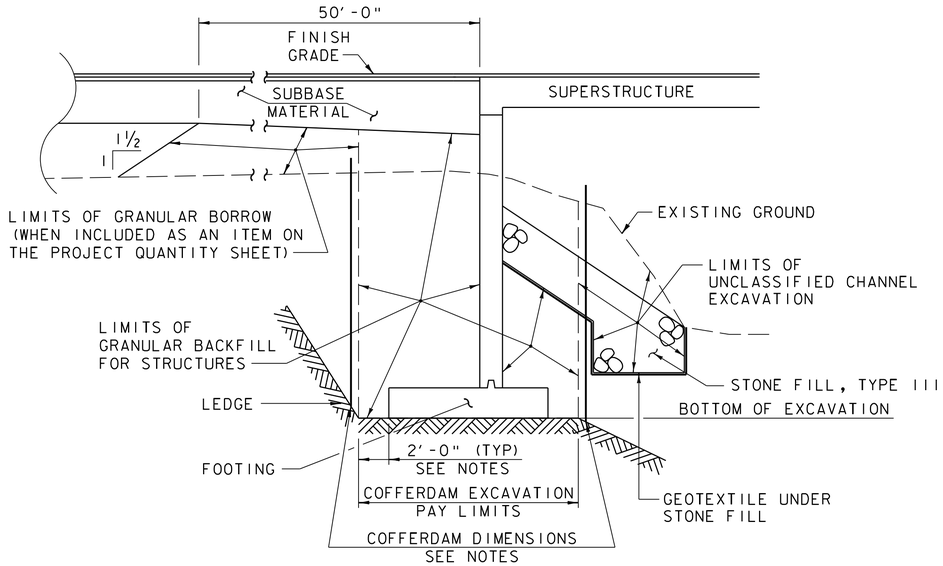

COFFERDAM AND EARTHWORK SECTION

(NOT TO SCALE)

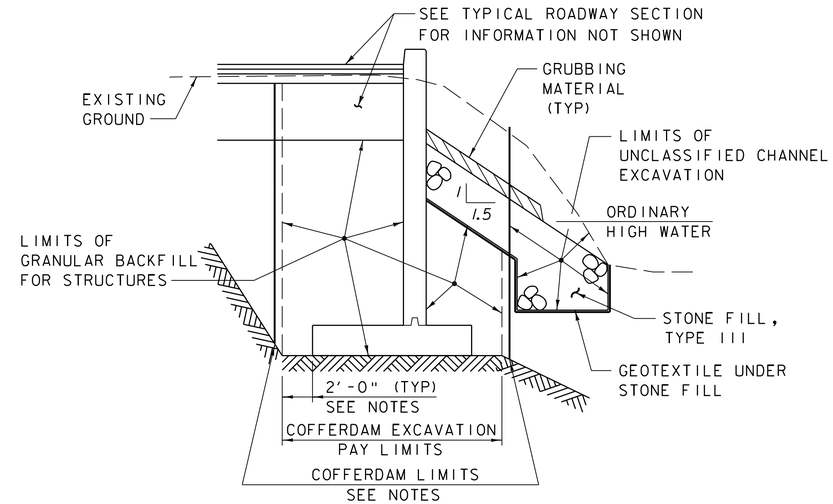

TYPICAL WINGWALL SECTION

(NOT TO SCALE)

COFFERDAM NOTES

1. COFFERDAM DIMENSIONS TO BE DETERMINED BY THE CONTRACTOR.
2. THE PAY LIMITS OF EITHER "COFFERDAM EXCAVATION, EARTH" OR "COFFERDAM EXCAVATION, ROCK" SHALL BE 2'-0" OUTSIDE THE PERIMETER OF THE FOOTING AND FROM BOTTOM OF EXCAVATION UP TO THE EXISTING GROUND OR BOTTOM OF SUBBASE, WHICHEVER IS LOWER.
3. IF A COFFERDAM IS CONSTRUCTED WHICH IS LARGER THAN THE INDICATED COFFERDAM EXCAVATION PAY LIMITS, PAYMENT FOR ALL UNCLASSIFIED CHANNEL EXCAVATION, INCLUDING THAT PORTION WHICH IS INSIDE THE COFFERDAM BUT OUTSIDE THE COFFERDAM PAY LIMITS, WILL BE MADE AT THE CONTRACT UNIT PRICE FOR UNCLASSIFIED CHANNEL EXCAVATION. NO MEASUREMENT AND PAYMENT WILL BE MADE FOR COFFERDAM EXCAVATION AND GRANULAR BACKFILL FOR STRUCTURES OUTSIDE THE PAY LIMITS DEFINED IN NOTE 2.

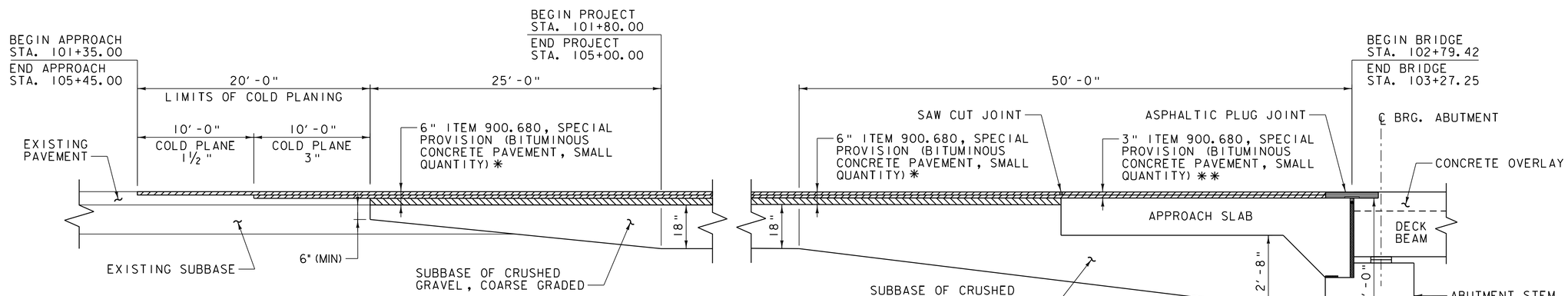

* (2) 1 1/2" LIFTS OF TYPE IVS OVER (1) 3" LIFT OF TYPE IIS

** (2) 1 1/2" LIFTS OF TYPE IVS

NOTE: EMULSIFIED ASPHALT IS TO BE APPLIED AT A RATE OF 0.040 GAL/SY BETWEEN ALL LIFTS OF BITUMINOUS CONCRETE PAVEMENT, ON ALL COLD PLANED SURFACES, AND ON THE APPROACH SLAB PRIOR TO PLACING THE FIRST LIFT OF PAVEMENT, AS DIRECTED BY THE ENGINEER.

TYPICAL APPROACH SECTION

NOT TO SCALE

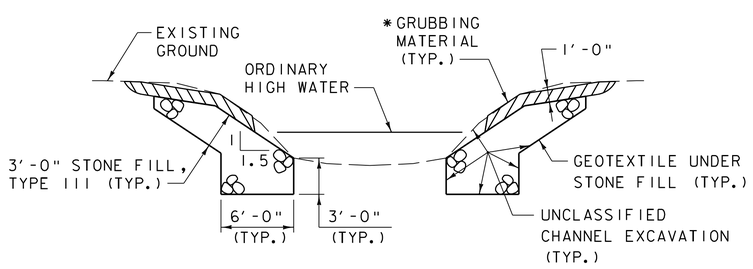

TYPICAL CHANNEL SECTION

(NOT TO SCALE)

*GRUBBING MATERIAL SHALL NOT BE PLACED ON THE STONE FILL IN THE AREA UNDER THE BRIDGE. WHENEVER CHANNEL SLOPE INTERSECTS ROADWAY SUBBASE, GRUBBING MATERIAL SHALL BEGIN AT THE BOTTOM OF SUBBASE.

VHB Vanasse Hangen Brustlin, Inc.

PROJECT NAME: BRATTLEBORO	
PROJECT NUMBER: BRO 1442(35)	
FILE NAME: z10j062typ.dgn	PLOT DATE: 10/14/2013
PROJECT LEADER: S.E. BURBANK	DRAWN BY: B.J. MASSE
DESIGNED BY: S.E BURBANK	CHECKED BY: S.E. BURBANK
TYPICAL EARTHWORK SECTIONS	SHEET 5 OF 68

VHB 57428

PROJECT NOTES

GENERAL

1. ALL MATERIALS AND CONSTRUCTION SHALL CONFORM TO THE STATE OF VERMONT AGENCY OF TRANSPORTATION STANDARD SPECIFICATIONS FOR CONSTRUCTION, DATED 2011, AND ITS LATEST REVISIONS, AND THE AASHTO LRFD BRIDGE DESIGN SPECIFICATIONS, 5TH EDITION, AND ITS LATEST REVISIONS.

2. THE BRIDGE IS DESIGNED FOR HL-93 LIVE LOAD WITH A 3.0 INCH ALLOWANCE FOR FUTURE PAVEMENT.

3. SALVAGED SIGNS NOT REUSED SHALL REMAIN THE PROPERTY OF THE TOWN OF BRATTLEBORO. THE CONTRACTOR SHALL DELIVER THE SIGNS TO THE TOWN AT THE DEPT. OF PUBLIC WORKS GARAGE LOCATED AT 211 FAIRGROUND ROAD.

4. ALL DIMENSIONS ARE HORIZONTAL OR VERTICAL AND ARE GIVEN AT 68 DEGREES FAHRENHEIT UNLESS NOTED OTHERWISE.

5. THE LIMITS OF THE COFFERDAM ARE TO BE DETERMINED BY THE CONTRACTOR.

6. ITEM 529.15 “REMOVAL OF STRUCTURE” IS FOR THE COMPLETE REMOVAL AND DISPOSAL OF THE EXISTING BRIDGE SUBSTRUCTURE AND SUPERSTRUCTURE, INCLUDING ALL BRIDGE RAIL, BEARINGS AND ANCHOR BOLTS, WHERE THE REMOVAL IS OUTSIDE OF THE AREAS COVERED BY ANY OF THE EXCAVATION ITEMS.

7. THE EXISTING BRIDGE CONTAINS STRUCTURAL STEEL ENCASED IN CONCRETE. THE STRUCTURAL STEEL MAY BE PAINTED WITH A MATERIAL THAT MAY CONTAIN LEAD. THE CONTRACTOR SHALL FOLLOW ALL APPLICABLE REGULATIONS WHEN HANDLING AND WORKING WITH THIS STEEL. THE REMOVED STRUCTURAL STEEL IS THE PROPERTY OF THE CONTRACTOR. THE CONTRACTOR SHALL INDEMNIFY AND HOLD THE STATE, ITS OFFICERS, AND EMPLOYEES HARMLESS CONCERNING THE CONTRACTOR’S USE OR DISPOSITION OF THE REMOVED EXISTING STRUCTURAL STEEL.

8. REMOVAL OF EXISTING BRIDGE PAVEMENT SHALL BE PAID AS ITEM 529.10, “REMOVAL OF BRIDGE PAVEMENT”.

9. THE CONTRACTOR SHALL VERIFY THE LOCATION OF ALL BURIED AND AERIAL UTILITIES AND POLES PRIOR TO STARTING WORK. SOME UTILITIES HAVE BEEN RELOCATED DURING THE PREPARATION OF THESE PLANS AND THE CONTRACTOR WILL NEED TO COORDINATE WITH ALL UTILITY OWNERS TO CONFIRM ACTUAL LOCATIONS PRIOR TO CONSTRUCTION. SEE THE UTILITY SPECIAL PROVISIONS FOR ADDITIONAL INFORMATION AND REQUIREMENTS.

EARTHWORK AND RELATED ITEMS

10. TEMPORARY CONSTRUCTION FILLS WITHIN THE WATERCOURSE FOR ANY PURPOSE SHALL CONSIST OF CLEAN STONE FILL ONLY. NO OTHER FILLING IN THE STREAM SHALL OCCUR WITHOUT THE APPROVAL OF THE STREAM ALTERATION ENGINEER.

11. A COFFERDAM IS REQUIRED FOR THE CONSTRUCTION OF THE ABUTMENTS. REFER TO THE “TYPICAL EARTHWORKS SECTIONS” FOR COFFERDAM NOTES.

12. STONE FILL, TYPE III SHALL BE PLACED IN FRONT OF THE ABUTMENTS BEFORE THE NEW BEAMS ARE SET, AS SHOWN ON THE PLANS.

13. ANY TEMPORARY MEANS OF SUPPORTING EXCAVATION NECESSARY TO MAINTAIN TRAFFIC SHALL BE INCIDENTAL TO ITEM 528.10, “ONE-WAY TEMPORARY BRIDGE”, AND SHALL MEET THE REQUIREMENTS OF SECTION 204. ASSOCIATED CONSTRUCTION DRAWINGS SHALL BE SUBMITTED IN ACCORDANCE WITH SECTION 105.

14. THE HEIGHT OF THE FILL BEHIND ABUTMENTS SHALL BE LIMITED TO THE BRIDGE SEAT ELEVATION UNTIL THE OVERLAY HAS BEEN POURED AND THE CURING PERIOD IS UP.

15. THE AREA DISTURBED BY THE TEMPORARY DETOUR SHALL BE RESTORED TO ITS ORIGINAL GRADE AND VEGETATED IF NECESSARY. ALL COSTS WILL BE INCIDENTAL TO ITEM 528.10, “ONE-WAY TEMPORARY BRIDGE”.

16. NEW TREES WILL BE PLANTED AT THE SITE WHERE TREES WERE REMOVED FOR THE TEMPORARY DETOUR AND WILL FOLLOW THE PLANTING SCHEDULE INCLUDED IN THE PLANS.

TRAFFIC MAINTENANCE DURING CONSTRUCTION

17. THE CONTRACTOR SHALL IMPLEMENT THE ROAD CLOSURE, TRAFFIC CONTROL, AND DETOUR AS SHOWN ON THE PLANS.

18. THE CONTRACTOR SHALL NOTIFY THE TOWN A MINIMUM OF TWO (2) WEEKS PRIOR TO CLOSING THE ROAD AND IMPLEMENTING THE DETOUR.

19. DURING CONSTRUCTION, TRAFFIC SHALL BE MAINTAINED ON A ONE-WAY TEMPORARY BRIDGE LOCATED UPSTREAM OF THE NEW STRUCTURE. THE TEMPORARY BRIDGE AND DETOUR SHALL BE PAVED. CONSTRUCTION AND MAINTENANCE OF THE TEMPORARY BRIDGE AND ITS APPROACHES SHALL BE PAID FOR UNDER ITEM 528.10, “ONE-WAY TEMPORARY BRIDGE”.

20. FULL ACCESS TO ALL SIDE ROADS AND DRIVES WITHIN THE PROJECT LIMITS SHALL BE MAINTAINED AT ALL TIMES. THIS WORK SHALL BE CONSIDERED INCIDENTAL TO ITEM 641.10, “TRAFFIC CONTROL”.

21. UNLESS COVERED UNDER INDIVIDUAL PAY ITEMS OR NOTED OTHERWISE, ALL COSTS FOR WORK SHOWN ON THE TRAFFIC CONTROL SHEETS AND FOR TEMPORARY TRAFFIC CONTROL DEVICES WILL BE CONSIDERED TO BE INCLUDED IN THE CONTRACT LUMP SUM PRICE FOR TRAFFIC CONTROL, ITEM 641.10, "TRAFFIC CONTROL". THIS INCLUDES, BUT IS NOT LIMITED TO, THE FOLLOWING ITEMS:

    RETROREFLECTIVE DRUMS
    PORTABLE TRAFFIC LIGHTS
    PORTABLE LUMINAIRE
    TYPE III BARRICADES
    ENERGY ABSORPTION ATTENUATOR
    SIGNS
    SIGN POSTS

    ENERGY ABSORPTION ATTENUATOR(S) SHALL BE FURNISHED IN ACCORDANCE WITH SECTION 621.

22. ALL SIGNS SHALL BE IN ACCORDANCE WITH THE CURRENT EDITIONS OF THE "MANUAL ON UNIFORM TRAFFIC CONTROL DEVICES" (MUTCD) AND THE "STANDARD HIGHWAY SIGNS AND MARKINGS" BOOK (SHSM) PUBLISHED BY THE FEDERAL HIGHWAY ADMINISTRATION (FHWA).

23. ALL TEMPORARY PORTABLE TRAFFIC CONTROL SIGNALS AND PORTABLE LIGHT TOWERS SHALL BE IN ACCORDANCE WITH SECTION 678 AND THE CURRENT EDITION OF THE “MANUAL ON UNIFORM TRAFFIC CONTROL DEVICES” (MUTCD).

24. SIGNAL TIMING/TIMING ADJUSTMENTS REQUESTED BY THE ENGINEER SHALL BE ACCOMPLISHED WITHIN 24 HOURS AFTER BEING REQUESTED. PAYMENT SHALL BE INCIDENTAL TO ITEM 641.10 “TRAFFIC CONTROL”. THE CONTRACTOR, AT THE DIRECTION OF THE ENGINEER, SHALL MAKE SEVERAL TRIAL RUNS TO DETERMINE THE PROPER ALL-RED CLEARANCE INTERVAL.

CONCRETE

25. CONCRETE FOR THE OVERLAY SHALL BE ITEM 501.32, “CONCRETE, HIGH PERFORMANCE, CLASS AA”. CONCRETE FOR THE CURBS SHALL BE ITEM 501.33, “CONCRETE, HIGH PERFORMANCE, CLASS A”. SUBSTRUCTURE CONCRETE SHALL BE ITEM 501.34, “CONCRETE, HIGH PERFORMANCE CLASS B”, UNLESS OTHERWISE NOTED.

26. THE KEY IN CONCRETE CONSTRUCTION JOINTS SHALL BE MONOLITHIC AND CONTINUOUS FOR THE FULL LENGTH OF THE JOINT.

27. ALL EXPOSED EDGES OF CONCRETE SHALL BE CHAMFERED 1” BY 1”.

28. JOINTS AND SCORE MARKS IN CONCRETE SHALL BE CONSTRUCTED AS INDICATED ON THE PLANS OR AS DIRECTED BY THE ENGINEER.

29. ALL REINFORCING STEEL SHALL BE DETAILED AND FABRICATED USING PROCEDURES AND TOLERANCES IN ACCORDANCE WITH APPLICABLE PUBLICATIONS OF THE CONCRETE REINFORCING STEEL INSTITUTE (CRSI).

30. REINFORCING STEEL PLACEMENT TOLERANCES SHALL BE:

    SPACING ± 1”
    CLEARANCE ± ¼”

31. MINIMUM COVER FOR REINFORCING STEEL SHALL BE 2” ALONG THE BACK FACES OF WALLS AGAINST EARTH AND 3" ELSEWHERE, UNLESS OTHERWISE NOTED.

32. NO CONCRETE IN THE ABUTMENTS OR WINGWALLS SHALL BE PLACED ABOVE THE BRIDGE SEAT ELEVATIONS UNTIL THE BEAMS OR SLABS HAVE BEEN PROFILED AND THE FINISHED GRADE OF THE DECK HAS BEEN DETERMINED.

33. RELATIVE TO GRADE, ALL DECK POURS SHALL BEGIN FROM THE LOW ELEVATION END AND PROCEED TOWARDS THE HIGH ELEVATION END.

34. SURFACES OF BRIDGE SEATS UNDER BEARING DEVICES SHALL BE LEVEL IN THE LONGITUDINAL DIRECTION (FROM THE APPROACH SLAB SEAT TO THE FRONT FACE OF THE ABUTMENT). ALL OTHER AREAS SHALL BE SLOPED DOWN 1/2 INCH PER FOOT FROM THE APPROACH SLAB SEAT TOWARD THE NEAREST OUTSIDE FACE OF THE SUBSTRUCTURE UNIT, SUCH AS TO PREVENT PONDING ON THE BRIDGE SEAT AREA. THE ENTIRE BRIDGE SEAT SURFACE SHALL BE SMOOTH STEEL TROWEL FINISHED.

35. WATER REPELLENT, SILANE, SHALL BE APPLIED TO ALL EXPOSED CONCRETE SURFACES EXCEPT THE UNDERSIDE OF THE DECK BETWEEN THE DRIP NOTCHES.

36. ½” SACRIFICIAL WEARING SURFACE HAS BEEN ADDED TO THE TOP OF THE CONCRETE OVERLAY. SEE SECTION 501 FOR DETAILS ON PROVIDING TEXTURING.

37. ALL SUPERSTRUCTURE REINFORCING STEEL SHALL MEET THE REQUIREMENTS OF SECTION 507 FOR LEVEL II REINFORCEMENT. REINFORCEMENT FOR OVERLAY SHALL BE PAID FOR UNDER ITEM 507.12, “REINFORCING STEEL, LEVEL II”. REINFORCEMENT FOR PRESTRESSED CONCRETE NON-VOIDED SLABS SHALL BE PAID FOR UNDER ITEM 900.640, “SPECIAL PROVISION (PRESTRESSED CONCRETE NON-VOIDED SLABS)”. REINFORCING FOR THE SUBSTRUCTURE SHALL BE PAID FOR UNDER ITEM 507.11, “REINFORCING STEEL, LEVEL I” AND ITEM 507.12, REINFORCING STEEL, LEVEL II”. CUTTING AND REPAIRING DAMAGED AREAS OF COATED REINFORCING STEEL SHALL BE PERFORMED IN ACCORDANCE WITH SUBSECTION 507.

SUBSTRUCTURE ON LEDGE

38. FOOTINGS AND SUB-FOOTINGS SHALL BE FOUNDED ON LEDGE WHICH HAS BEEN CLEANED OF ALL LOOSE ROCK AND DEBRIS TO ENSURE THAT SUBSTRUCTURES ARE PLACED ON COMPETENT ROCK.

39. UPON COMPLETION OF THE EXCAVATION FOR SUBSTRUCTURES FOUNDED ON BEDROCK AND PRIOR TO PLACING FORMWORK, THE ENGINEER SHALL NOTIFY THE PROJECT MANAGER AND THE VTRANS STATE GEOLOGIST. THE GEOLOGIST WILL DETERMINE IF THE BEDROCK IS COMPETENT TO OBTAIN THE NOMINAL BEARING RESISTANCE AS SHOWN ON THE PLANS. THE CONTRACTOR SHALL NOTIFY THE GEOLOGIST 72 HOURS PRIOR TO WHEN THE ANALYSIS WILL BE NEEDED.

40. LEDGE THAT IS EXCAVATED FOR PLACEMENT OF FOOTINGS SHALL BE EXCAVATED TO PROVIDE A LEVEL SURFACE OR AS DIRECTED BY THE ENGINEER.

41. A MAXIMUM OF 6” OVER BREAKAGE WILL BE REPLACED WITH “HIGH PERFORMANCE CLASS B CONCRETE”. OVER BREAKAGE BEYOND 6” SHALL BE REPLACED WITH HIGH PERFORMANCE CLASS B CONCRETE” AT THE EXPENSE OF THE CONTRACTOR.

42. THE LIMITS OF THE SUBFOOTING SHALL BE 1’-0” OUTSIDE THE LIMITS OF THE FOOTING.

43. THE SUBSTRUCTURE UNITS HAVE BEEN DESIGNED FOR THE TOP OF FOOTING ELEVATIONS SHOWN ON THE PLANS. IF THE LEDGE ELEVATION IS GREATER THAN 1’-0” BELOW THE DESIGN BOTTOM OF FOOTING, A SUBFOOTING SHALL BE POURED SO THAT THE DESIGN TOP OF FOOTING IS AT THE REQUIRED ELEVATION.

44. FOR ALL SUBSTRUCTURES, WHERE LEDGE IS WITHIN ONE FOOT FROM THE BOTTOM OF THE FOOTING AS DESIGNED, THE FOOTING MAY BE POURED TO THE TOP OF THE LEDGE USING “CONCRETE, HIGH PERFORMANCE CLASS B”.

45. FOR ALL SUBSTRUCTURE UNITS WHERE LEDGE IS BELOW TOP OF FOOTING BY LESS THAN THE DEPTH OF FOOTING DETAILED IN THE PLANS, THE LEDGE SHALL BE EXCAVATED DOWN TO THE INDICATED BOTTOM OF FOOTING FOR THE FULL WIDTH (TOE TO HEEL) OF THE CONFIGURATION.

46. IF LEDGE IS ABOVE THE DESIGN TOP OF FOOTING, THE FOOTING MAY BE RAISED. BEFORE ANY UPWARD ADJUSTMENT IS MADE IN FOOTING ELEVATION, THE PROJECT MANAGER SHALL BE CONTACTED AND PROVIDED WITH A LEDGE PROFILE. NO FURTHER WORK SHALL BE DONE UNTIL APPROVAL OF THE CONFIGURATION IS RECEIVED.

47. #8 DOWELS SHALL BE DRILLED AND GROUTED INTO THE LEDGE AS SHOWN ON THE PLANS. THE DOWELS SHALL HAVE A MINIMUM 2’-0” EMBEDMENT INTO THE LEDGE AND SHALL EXTEND INTO THE FOOTING A MINIMUM OF 1’-6”. IN AREAS WHERE A SUBFOOTING IS REQUIRED #8 DOWELS WILL ALSO BE USED AT THE INTERFACE BETWEEN SUBFOOTING AND FOOTING. THE DRILLING AND GROUTING SHALL BE PAID FOR UNDER THE ITEM 507.16, “DRILLING AND GROUTING DOWELS”.

48. PRIOR TO ANY COLD WEATHER CONCRETE PLACEMENT AS DEFINED IN SECTION 501, THE CONTRACTOR SHALL SUBMIT A PLAN TO THE ENGINEER FOR APPROVAL. THE PLAN AT A MINIMUM SHALL PROVIDE METHODS FOR INSULATING, CURING, AND HEATING, TEMPERATURE MONITORING, AND ANY WEATHER RESTRICTIONS FOR CONCRETE PLACEMENT. THE PLAN SHALL BE SPECIFIC TO THE LOCATION OF THE PLACEMENT AND BE SUBMITTED A MINIMUM OF 14 DAYS PRIOR TO THE ANTICIPATED PLACEMENT DATE. COLD WEATHER CONCRETE SHALL NOT BE PLACED PRIOR TO APPROVAL OF THE PLAN.

PRESTRESSED NON-VOIDED SLABS

49. PRESTRESSED CONCRETE NON-VOIDED SLABS SHALL BE PAID FOR UNDER ITEM 900.640, “SPECIAL PROVISION (PRESTRESSED CONCRETE NON-VOIDED SLABS)(18”x36”)” OR ITEM 900.640, “SPECIAL PROVISION (PRESTRESSED CONCRETE NON-VOIDED SLABS)(18”x48”)”.

50. ITEM 900.640, “SPECIAL PROVISION (PRESTRESSED CONCRETE NON-VOIDED SLAB)” SHALL: 1
    A. CONFORM TO SECTION 510 “PRESTRESSED CONCRETE”.
    B. HAVE THE ENDS OF THE STRANDS RECESSED AND GROUTED ACCORDING TO STANDARD PRACTICE.
    C. INCLUDE COLD POURED JOINT FILLER AND TRANSVERSE TENDONS.
    D. GALVANIZE TRANSVERSE THREADED STEEL ROD PLATES AND ANCHOR NUTS AFTER FABRICATION ACCORDING TO AASHTO M 232M/M 232.

51. ITEM 510.24, “GROUTING SHEAR KEYS”: FILL THE JOINTS BETWEEN THE BEAMS WITH MORTAR, TYPE IV, AS DESCRIBED IN SUBSECTION 510.13.

REV.	DESCRIPTION	DATE
1	PRESTRESSED NON-VOIDED SLAB NOTES	11/20/2013

PROJECT NAME: BRATTLEBORO
PROJECT NUMBER: BRO 1442(35)

Vanasse Hangen Brustlin, Inc.

FILE NAME: z10j062pn.dgn
PROJECT LEADER: S.E. BURBANK
DESIGNED BY: S.E. BURBANK
PROJECT NOTES (1 OF 2)

PLOT DATE: 11/20/2013
DRAWN BY: E.A. FIALA
CHECKED BY: S.E. BURBANK
SHEET 6 OF 68

PROJECT NOTES CONT'D...

52. DESIGN VALUES:
    A. CONCRETE: F'c = 6 ksi AND Fc = 4.8 ksi
    B. LIVE LOAD: AASHTO HL-93
    C. PRESTRESSING STRANDS: 0.6" DIAMETER, 270 KSI, LOW-RELAXATION 7-WIRE STRANDS PULLED TO 75% OF THEIR YIELD STRENGTH
    D. POST-TENSIONING STRANDS: 1" DIAMETER, 150 KSI, THREADED STEEL ROD.
    E. THERE SHALL BE ONE (1) THREADED STEEL ROD PER POST-TENSION DUCT.
    F. THREADED STEEL RODS SHALL BE COVERED WITH CORROSION INHIBITOR GREASE FOR THE LENGTH OF THE STRAND. TIES SHALL BE TENSIONED TO 47 KIPS FOR EACH 1" DIAMETER THREADED STEEL ROD.
    G. SERVICE LOADS (INT & EXT):

MEMBER MOMENT	189.8 & 142.4 K-FT
SUPERIMPOSED DEAD LOAD MOMENT	142.5 & 101.0 K-FT
LIVE LOAD & IMPACT MOMENT	197.8 & 165.7 K-FT
DEAD LOAD REACTION	27.2 & 18.5 K
LIVE LOAD & IMPACT REACTION	41.7 K & 63.6 K
TOTAL REACTION	68.9 & 82.1 K
RELEASE CAMBER	1.033 & 0.925 IN
ERECTION CAMBER	1.095 & 0.990 IN

53. THE FABRICATOR MAY, WITH THE APPROVAL OF THE PROJECT MANAGER, ALTER THE DESIGN AS DETAILED TO MEET THE PLANT'S PRESTRESSING OPERATION AND MATERIAL REQUIREMENTS. ALTERNATE STRAND, TRANSVERSE TIE AND CROSS-SLOPE CONFIGURATIONS MAY BE SUBMITTED TO THE ENGINEER FOR APPROVAL. ANY DESIGN CHANGES SHALL MEET ALL OF THE APPLICABLE DESIGN CRITERIA AND SHALL BE STAMPED AND SIGNED BY A PROFESSIONAL ENGINEER LICENSED IN THE STATE OF VERMONT.

54. THE PRECASTER SHALL SANDBLAST SHEAR KEY FACES PRIOR TO DELIVERY.

55. ALL TIES AND STIRRUPS IN THE NON-VOIDED SLABS SHALL MEET THE REQUIREMENTS OF SECTION 507 FOR LEVEL II REINFORCEMENT. PAYMENT WILL BE INCLUDED IN THE UNIT PRICE BID FOR CONTRACT ITEM 900.640, "SPECIAL PROVISION (PRESTRESSED CONCRETE NON-VOIDED SLABS)".

56. THE CONTRACTOR IS RESPONSIBLE FOR DESIGN OF ALL LIFTING POINTS, POST TENSIONING ELEMENTS IN THE ANCHORAGE ZONE AND ADDITIONAL REINFORCEMENT IN THE ANCHORAGE ZONE (REQUIRED FOR SPLITTING, BURSTING SPALLING, ETC.) INCLUDING THE LOCAL ZONE (REGION IMMEDIATELY SURROUNDING THE POST TENSIONING DEVICE). THE CONTRACTOR IS RESPONSIBLE FOR CONSIDERATION OF ADDITIONAL STRESSES DUE TO HANDLING. DESIGN MUST CONFORM TO AASHTO LRFD SPECIFICATIONS.

PROPOSED CONSTRUCTION SEQUENCE FOR PRESTRESSED NON-VOIDED SLABS

57. LAY OUT WORKING LINES:
    A. LAY OUT WORKING LINES FOR THE ENTIRE BRIDGE WIDTH ON THE BEAM SEAT.
    B. MEASURE ALL WORKING LINES FROM A COMMON WORKING POINT.
    C. BASE THE WORKING LINES ON THE NOMINAL BEAM WIDTHS.

58. VERIFY BEAM SEAT ELEVATIONS:
    A. MEASURE ELEVATIONS AT BEAM SEATS.
    B. IF SEATS ARE HIGH OR LOW, TAKE CORRECTIVE ACTION.
    C. INSTALL BEARINGS.

59. ERECT BEAMS STARTING AT THE LOWER EXTERIOR BEAM, PLACING ONE BEAM AT A TIME:
    A. PLACE BEAMS TO FIT WITHIN THE WORKING LINES.
    B. PRIOR TO INSTALLING INTERIOR BEAMS IN EACH PHASE OF CONSTRUCTION, INSTALL ANCHORED END OF THREADED STEEL ROD WITH ENOUGH ROD TO PASS THROUGH THE NEXT BEAM TO BE PLACED IN THE FOLLOWING PHASE OF CONSTRUCTION.
    C. AS WORK PROGRESSES, INSTALL HARDWOOD WEDGES BETWEEN ADJACENT BEAMS TO MAINTAIN PROPER JOINT OPENING (A MINIMUM OF ONE WEDGE AT EACH POST TENSIONING DUCT).
    D. DRILL ANCHOR BOLT HOLES.
    E. PLACE ANCHOR BOLTS.

60. INSTALL BACKER ROD: PLACE FILLER BELOW THE KEYWAY BOTTOM, AS SHOWN ON THE PLANS.

61. INSTALL THREADED STEEL RODS:
    A. FEED THREADED STEEL RODS THROUGH DUCTS.
    B. VERIFY THAT HARDWOOD WEDGES ARE IN PLACE AS REQUIRED TO PREVENT SLIPPAGE OF BEAMS.
    C. USING A CALIBRATED JACK, POST-TENSION THE THREADED STEEL RODS TO APPROXIMATELY 5 KIPS TO SEAT THE ANCHOR NUT.

62. GROUT SHEAR KEYS:
    A. CLEAN JOINTS WITH AN OIL FREE AIR-BLAST IMMEDIATELY BEFORE GROUT PLACEMENT. VERIFY THAT THE BACKER ROD IS STILL IN PLACE.
    B. FOLLOW MANUFACTURER'S RECOMMENDATIONS FOR ADDITIONAL JOINT PREPARATION AND GROUT PLACEMENT.
    C. CAREFULLY ROD JOINTS TO ELIMINATE ANY POSSIBILITY OF VOIDS.

63. POST-TENSION THREADED STEEL RODS:
    A. GROUT SHALL ATTAIN A MINIMUM COMPRESSIVE STRENGTH OF 1500 PSI, BASED ON THE MANUFACTURER'S RECOMMENDATIONS, PRIOR TO STRESSING. THE GROUT NEED NOT BE CURED FOR THREE DAYS PRIOR TO THE COMMENCING OF POST-TENSIONING.
    B. PROVIDE APPROPRIATE CUBE MOLDS AS DESCRIBED IN AASHTO T106 FOR 3 SETS OF 3 DAY CUBES, 3 SETS OF 28 DAY CUBES AND AT A MINIMUM OF 3 MORE CUBES TO TEST FOR THE 1500 PSI MINIMUM COMPRESSIVE STRENGTH.
    C. POST-TENSION THREADED STEEL RODS TO 47 KIPS USING A CALIBRATED JACK OPERATED BY QUALIFIED PERSONNEL.

64. FOR EACH BEAM, REPEAT THE SEQUENCE SPECIFIED IN NOTES 59-63.

65. END DETAILS:
    A. GROUT ANCHOR BOLTS INTO THE SLEEVES IN THE PRESTRESSED UNITS AT THE FIXED ENDS. BEFORE THE GROUT CURES, PLACE THE WASHER PLATE, AND INSTALL THE NUT ON TOP AND TIGHTEN.
    B. PLACE THE COLD POURED JOINT SEALER IN THE SLEEVES IN THE PRESTRESSED UNITS AT THE EXPANSION ENDS. PLACE THE WASHER PLATE AND INSTALL THE NUT ON TOP. HAND TIGHTEN AND THEN LOOSEN ½ TURN.
    C. GROUT OVER THE NUT AND BOLT IN THE ANCHOR BOLT BLOCK OUT ON THE FIXED ENDS. FILL THE ANCHOR BOLT BLOCK OUTS ON THE EXPANSION ENDS WITH COLD POURED JOINT SEALER.

66. FINISH WORK: REMOVE WEDGES, AND PATCH SURFACE AND FASCIA BEAMS AT TRANSVERSE TENDONS.

Vanasse Hangen Brustlin, Inc.

REV.	DESCRIPTION	DATE
1	POST TENSIONING NOTES	11/20/2013

PROJECT NAME: BRATTLEBORO
PROJECT NUMBER: BRO 1442(35)

FILE NAME: z10j062pn.dgn
PROJECT LEADER: S.E. BURBANK
DESIGNED BY: S.E. BURBANK
PROJECT NOTES (2 OF 2)
PLOT DATE: 11/20/2013
DRAWN BY: E.A. FIALA
CHECKED BY: S.E. BURBANK
SHEET 7 OF 68

STATE OF VERMONT
AGENCY OF TRANSPORTATION

QUANTITY SHEET 1

SUMMARY OF ESTIMATED QUANTITIES					TOTALS		DESCRIPTIONS			
ROADWAY	LANDSCAPING	EROSION CONTROL	BRIDGE	FULL C.E. ITEMS	GRAND TOTAL	FINAL	UNIT	ITEMS	ITEM NUMBER	ROUND
1					1		LS	CLEARING AND GRUBBING, INCLUDING INDIVIDUAL TREES AND STUMPS	201.10	
630					630		CY	COMMON EXCAVATION	203.15	
			420		420		CY	UNCLASSIFIED CHANNEL EXCAVATION	203.27	
1					1		CY	TRENCH EXCAVATION OF EARTH, EXPLORATORY (N.A.B.I.)	204.22	
			820		820		CY	GRANULAR BACKFILL FOR STRUCTURES	204.30	
			1070		1070		CY	COFFERDAM EXCAVATION, EARTH	208.30	
			365		365		CY	COFFERDAM EXCAVATION, ROCK	208.35	
			1		1		LS	COFFERDAM (ABUTMENT NO. 1)	208.40	
			1		1		LS	COFFERDAM (ABUTMENT NO. 2)	208.40	
175					175		SY	COLD PLANING, BITUMINOUS PAVEMENT	210.10	
550					550		CY	SUBBASE OF CRUSHED GRAVEL, COARSE GRADED	301.25	
7					7		CWT	EMULSIFIED ASPHALT	404.65	
1					1		LU	PRICE ADJUSTMENT, ASPHALT CEMENT (N.A.B.I.)	406.50	
			25		25		CY	CONCRETE, HIGH PERFORMANCE CLASS AA	501.32	
			5		5		CY	CONCRETE, HIGH PERFORMANCE CLASS A	501.33	
			330		330		CY	CONCRETE, HIGH PERFORMANCE CLASS B	501.34	
			30280		30280		LB	REINFORCING STEEL, LEVEL I	507.11	
			13345		13345		LB	REINFORCING STEEL, LEVEL II	507.12	
			100		100		LF	DRILLING AND GROUTING DOWELS	507.16	
			290		290		LF	GROUTING SHEAR KEYS	510.24	
			16		16		GAL	WATER REPELLENT, SILANE	514.10	
			68		68		LF	BRIDGE EXPANSION JOINT, ASPHALTIC PLUG	516.10	
			69		69		LF	JOINT SEALER, HOT POURED	524.11	
			1		1		LS	ONE-WAY TEMPORARY BRIDGE (880 SF - EST.)	528.10	
			55		55		SY	REMOVAL OF BRIDGE PAVEMENT	529.10	
			1		1		EACH	REMOVAL OF STRUCTURE (653 SF - EST.)	529.15	
			28		28		EACH	BEARING DEVICE ASSEMBLY, STEEL REINFORCED ELASTOMERIC PAD	531.17	
20					20		MGAL	DUST CONTROL WITH WATER	609.10	
			410		410		CY	STONE FILL, TYPE III	613.12	
1					1		EACH	RELOCATE MAILBOX, SINGLE SUPPORT	617.10	
1					1		EACH	RELOCATE MAILBOX, MULTIPLE SUPPORT	617.12	
58					58		LF	STEEL BEAM GUARDRAIL, GALVANIZED	621.20	
113					113		LF	STEEL BEAM GUARDRAIL, GALVANIZED W/8 FEET POSTS	621.205	
4					4		EACH	ANCHOR FOR STEEL BEAM RAIL	621.60	
4					4		EACH	GUARDRAIL APPROACH SECTION, GALV HD STEEL BEAM W/ 8FT POSTS	621.738	
180					180		LF	REMOVAL AND DISPOSAL OF GUARDRAIL	621.80	
100					100		HR	FLAGGERS	630.15	
				1	1		LS	FIELD OFFICE, ENGINEERS	631.10	
				1	1		LS	TESTING EQUIPMENT, CONCRETE	631.16	
				1	1		LS	TESTING EQUIPMENT, BITUMINOUS	631.17	

DETAILED SUMMARY OF QUANTITIES

QUANTITIES	UNIT	ITEMS
		EARTHWORKS SUMMARY
86	CY	FILL REQUIRED (75 CY *1.15)
		FILL AVAILABLE
504	CY	COMMON EXCAVATION (630 CY * 0.80)
315	CY	UNCLASSIFIED CHANNEL EXCAVATION (420 CY * 0.75)
803	CY	COFFERDAM EXCAVATION EARTH (1070 CY * 0.75)
181	CY	COFFERDAM EXCAVATION ROCK (365 CY * 0.495)
1802	CY	SUBTOTAL
0	CY	ROUNDING
1802	CY	TOTAL
1802	CY	FILL AVAILABLE
86	CY	FILL REQUIRED
0	CY	BORROW
1716	CY	WASTE
		COMMON EXCAVATION
576	CY	MAINLINE
54	CY	DRIVES
0	CY	ROUNDING
630	CY	TOTAL
		SUBBASE OF CRUSHED GRAVEL, COARSE GRADED
490	CY	MAINLINE
60	CY	DRIVES
0	CY	ROUNDING
550	CY	TOTAL

Vanasse Hangen Brustlin, Inc.

PROJECT NAME: BRATTLEBORO
PROJECT NUMBER: BRO 1442(35)

FILE NAME: z10J062qs.dgn
PROJECT LEADER: S.E. BURBANK
DESIGNED BY: E.A. FIALA
QUANTITY SHEET #1

PLOT DATE: 11/12/2013
DRAWN BY: A.J. GOUDREAU
CHECKED BY: S.E. BURBANK
SHEET 8 OF 68

STATE OF VERMONT
AGENCY OF TRANSPORTATION

QUANTITY SHEET 2

SUMMARY OF ESTIMATED QUANTITIES					TOTALS		DESCRIPTIONS			
ROADWAY	LANDSCAPING	EROSION CONTROL	BRIDGE	FULL C.E. ITEMS	GRAND TOTAL	FINAL	UNIT	ITEMS	ITEM NUMBER	ROUND
				3000	3000		DL	FIELD OFFICE TELEPHONE (N.A.B.I.)	631.26	
1					1		LS	MOBILIZATION/DEMOBILIZATION	635.11	
1					1		LS	TRAFFIC CONTROL	641.10	
			1010		1010		SY	GEOTEXTILE UNDER STONE FILL	649.31	
		300			300		SY	GEOTEXTILE FOR SILT FENCE	649.51	
		300			300		SY	GEOTEXTILE FOR FILTER CURTAIN	649.61	
		10			10		LB	SEED	651.15	
		70			70		LB	FERTILIZER	651.18	
		0.3			0.3		TON	AGRICULTURAL LIMESTONE	651.20	
		0.3			0.3		TON	HAY MULCH	651.25	
		40			40		CY	TOPSOIL	651.35	
		300			300		SY	GRUBBING MATERIAL	651.40	
		1			1		LS	EPSC PLAN	652.10	
		80			80		HR	MONITORING EPSC PLAN	652.20	
		1			1		LU	MAINTENANCE OF EPSC PLAN (N.A.B.I.)	652.30	
		110			110		SY	TEMPORARY EROSION MATTING	653.20	
		15			15		CY	TEMPORARY STONE CHECK DAM, TYPE I	653.25	
		30			30		CY	VEHICLE TRACKING PAD	653.35	
		70			70		LF	BARRIER FENCE	653.50	
		650			650		LF	PROJECT DEMARCATION FENCE	653.55	
	7				7		EACH	DECIDUOUS TREES (ACER RUBRUM) (B&B) (2.5" - 3" DIA.)	656.30	
	6				6		EACH	DECIDUOUS TREES (ACER SACCHARINUM) (B&B) (2" - 2.5" DIA.)	656.30	
	58				58		EACH	DECIDUOUS SHRUBS (CORNUS SERICEA) (B&B) (36" - 48" HT.)	656.35	
	7.2				7.2		MGAL	LANDSCAPE WATERING	656.65	
	65				65		CY	LANDSCAPE BACKFILL, TRUCK MEASUREMENT	656.80	
	1				1		LS	TREE PROTECTION	656.85	
12					12		SF	TRAFFIC SIGNS, TYPE A	675.20	
30					30		LF	SQUARE TUBE SIGN POST AND ANCHOR	675.341	
11					11		EACH	REMOVING SIGNS	675.50	
1					1		EACH	ERECTING SALVAGED SIGNS	675.60	
			200		200		LF	SPECIAL PROVISION (BRIDGE RAILING, GALVANIZED HDSB/FASCIA MOUNTED/STEEL TUBING)	900.640	
175					175		LF	SPECIAL PROVISION (FABRIC SCREENING FENCE)	900.640	
			96		96		LF	SPECIAL PROVISION (PRESTRESSED CONCRETE NON-VOIDED SLABS)(18"x36")	900.640	
			240		240		LF	SPECIAL PROVISION (PRESTRESSED CONCRETE NON-VOIDED SLABS)(18"x48")	900.640	
1					1		LU	SPECIAL PROVISION (MAT DENSITY PAY ADJUSTMENT, SMALL QUANTITY) (N.A.B.I.)	900.650	
1					1		LU	SPECIAL PROVISION (MIXTURE PAY ADJUSTMENT) (N.A.B.I.)	900.650	
310					310		TON	SPECIAL PROVISION (BITUMINOUS CONCRETE PAVEMENT, SMALL QUANTITY)	900.680	

DETAILED SUMMARY OF QUANTITIES

QUANTITIES	UNIT	ITEMS
		SPECIAL PROVISION
		(BITUMINOUS CONCRETE PAVEMENT, SMALL QUANTITY)
148	TONS	TYPE IVS - WEARING COURSE
130	TONS	TYPE IIS - BASE COURSE
278	TONS	TOTAL
		DRIVES
12	TONS	STA. 102+55, LT
20	TONS	STA. 103+60, RT
32	TONS	TOTAL
310	TONS	**TOTAL BIT. CONCRETE PAVEMENT, SMALL QUANTITY**

Vanasse Hangen Brustlin, Inc.

PROJECT NAME: BRATTLEBORO
PROJECT NUMBER: BRO 1442(35)

FILE NAME: z10J062qs.dgn
PROJECT LEADER: S.E. BURBANK
DESIGNED BY: E.A. FIALA
QUANTITY SHEET #2

PLOT DATE: 11/12/2013
DRAWN BY: A.J. GOUDREAU
CHECKED BY: S.E. BURBANK
SHEET 9 OF 68

STATE OF VERMONT
AGENCY OF TRANSPORTATION

BRIDGE QUANTITY SHEET 1

SUMMARY OF BRIDGE QUANTITIES																		TOTALS	DESCRIPTIONS			
								TEMPORARY BRIDGE		APP SLAB 1		ABUTMENT 1		SUPER-STURCTURE		ABUTMENT 2		APP SLAB 2	BRIDGE TOTAL	UNIT	ITEMS	ITEM NUMBER
												180				240			420	CY	UNCLASSIFIED CHANNEL EXCAVATION	203.27
												450				370			820	CY	GRANULAR BACKFILL FOR STRUCTURES	204.30
												545				525			1070	CY	COFFERDAM EXCAVATION, EARTH	208.30
												185				180			365	CY	COFFERDAM EXCAVATION, ROCK	208.35
												1							1	LS	COFFERDAM (ABUTMENT NO. 1)	208.40
																1			1	LS	COFFERDAM (ABUTMENT NO. 2)	208.40
														25					25	CY	CONCRETE, HIGH PERFORMANCE CLASS AA	501.32
														5					5	CY	CONCRETE, HIGH PERFORMANCE CLASS A	501.33
										35		130				130		35	330	CY	CONCRETE, HIGH PERFORMANCE CLASS B	501.34
												16660				13620			30280	LB	REINFORCING STEEL, LEVEL I	507.11
										3570		945		2835		2485		3510	13345	LB	REINFORCING STEEL, LEVEL II	507.12
												42				58			100	LF	DRILLING AND GROUTING DOWELS	507.16
														290					290	LF	GROUTING SHEAR KEYS	510.24
												2.5		9.5		4			16	GAL	WATER REPELLENT, SILANE	514.10
														68					68	LF	BRIDGE EXPANSION JOINT, ASPHALTIC PLUG	516.10
										34.5								34.5	69	LF	JOINT SEALER, HOT POURED	524.11
																1			1	LS	ONE-WAY TEMPORARY BRIDGE (880 SF - EST.)	528.10
														55					55	SY	REMOVAL OF BRIDGE PAVEMENT	529.10
														1					1	EACH	REMOVAL OF STRUCTURE (653 SF - EST.)	529.15
												14				14			28	EACH	BEARING DEVICE ASSEMBLY, STEEL REINFORCED ELASTOMERIC PAD	531.17
												175				235			410	CY	STONE FILL, TYPE III	613.12
												418				592			1010	SY	GEOTEXTILE UNDER STONE FILL	649.31
														200					200	LF	SPECIAL PROVISION (BRIDGE RAILING, GALVANIZED HDSB/FASCIA MOUNTED/STEEL TUBING)	900.640
														96					96	LF	SPECIAL PROVISION (PRESTRESSED CONCRETE NON-VOIDED SLABS)(18"x36")	900.640
														240					240	LF	SPECIAL PROVISION (PRESTRESSED CONCRETE NON-VOIDED SLABS)(18"x48")	900.640

DETAILED SUMMARY OF QUANTITIES

QUANTITIES	UNIT	ITEMS

Vanasse Hangen Brustlin, Inc.

PROJECT NAME: BRATTLEBORO
PROJECT NUMBER: BRO 1442(35)

FILE NAME: z10J062qs.dgn
PROJECT LEADER: S.E. BURBANK
DESIGNED BY: E.A. FIALA
BRIDGE QUANTITY SHEET #1

PLOT DATE: 11/12/2013
DRAWN BY: A.J. GOUDREAU
CHECKED BY: S.E. BURBANK
SHEET 10 OF 68

VHB 57428

GENERAL INFORMATION

SYMBOLOGY LEGEND NOTE

THE SYMBOLOGY ON THIS SHEET IS INTENDED TO COVER STANDARD CONVENTIONAL SYMBOLOGY. THE SYMBOLOGY IS USED FOR EXISTING & PROPOSED FEATURES WITH HEAVIER LINEWEIGHT, IN COMBINATION WITH PROJECT ANNOTATION, AS NOTED ON PROJECT PLAN SHEETS. THIS LEGEND SHEET COVERS THE BASICS. SYMBOLOGY ON PLANS MAY VARY, PLAN ANNOTATIONS AND NOTES SHOULD BE USED TO CLARIFY AS NEEDED.

R.O.W. ABBREVIATIONS (CODES) & SYMBOLS

POINT	CODE	DESCRIPTION
	CH	CHANNEL EASEMENT
	CONST	CONSTRUCTION EASEMENT
	CUL	CULVERT EASEMENT
	D&C	DISCONNECT & CONNECT
	DIT	DITCH EASEMENT
	DR	DRAINAGE EASEMENT
	DRIVE	DRIVEWAY EASEMENT
	EC	EROSION CONTROL
	I&M	INSTALL & MAINTAIN EASEMENT
	LAND	LANDSCAPE EASEMENT
	SR	SLOPE RIGHT
	UE	UTILITY EASEMENT
	(P)	PERMANENT EASEMENT
	(T)	TEMPORARY EASEMENT
■	BNDNS	BOUND SET
⊡	BNDNS	BOUND TO BE SET
●	IPNS	IRON PIN SET
◎	IPNS	IRON PIN TO BE SET
⊠	CALC	CALCULATED ROW POINT
[DISTANCE]		DISTANCE CARRIED ON NEXT SHEET

COMMON TOPOGRAPHIC POINT SYMBOLS

POINT	CODE	DESCRIPTION
	APL	BOUND APPARENT LOCATION
	BM	BENCH MARK
	BND	BOUND
	CB	CATCH BASIN
	COMB	COMBINATION POLE
	DITHR	DROP INLET THROATED DNC
	EL	ELECTRIC POWER POLE
	FPOLE	FLAGPOLE
	GASFIL	GAS FILLER
	GP	GUIDE POST
	GSO	GAS SHUT OFF
	GUY	GUY POLE
	GUYW	GUY WIRE
	GV	GATE VALUE
	H	TREE HARDWOOD
	HCTRL	CONTROL HORIZONTAL
	HVCTRL	CONTROL HORIZ. & VERTICAL
	HYD	HYDRANT
	IP	IRON PIN
	IPIPE	IRON PIPE
	LI	LIGHT - STREET OR YARD
	MB	MAILBOX
	MH	MANHOLE (MH)
	MM	MILE MARKER
	PM	PARKING METER
	PMK	PROJECT MARKER
	POST	POST STONE/WOOD
	RRSIG	RAILROAD SIGNAL
	RRSL	RAILROAD SWITCH LEVER
	S	TREE SOFTWOOD
	SAT	SATELLITE DISH
	SHRUB	SHRUB
	SIGN	SIGN
	STUMP	STUMP
	TEL	TELEPHONE POLE
	TIE	TIE
	TSIGN	SIGN W/DOUBLE POST
	VCTRL	CONTROL VERTICAL
	WELL	WELL
	WSO	WATER SHUT OFF

THESE ARE COMMON VAOT SURVEY POINT SYMBOLS FOR EXISTING FEATURES, ALSO USED FOR PROPOSED FEATURES WITH HEAVIER LINEWEIGHT, IN COMBINATION WITH PROPOSED ANNOTATION.

PROPOSED GEOMETRY CODES

CODE	DESCRIPTION
PC	POINT OF CURVATURE
PI	POINT OF INTERSECTION
CC	CENTER OF CURVE
PT	POINT OF TANGENCY
PCC	POINT OF COMPOUND CURVE
PRC	POINT OF REVERSE CURVE
POB	POINT OF BEGINNING
POE	POINT OF ENDING
STA	STATION PREFIX
AH	AHEAD STATION SUFFIX
BK	BACK STATION SUFFIX
D	CURVE DEGREE OF (100FT)
R	CURVE RADUIS OF
T	CURVE TANGENT LENGTH
L	CURVE LENGTH OF
E	CURVE EXTERNAL DISTANCE

UTILITY SYMBOLOGY

UNDERGROUND UTILITIES

UT	TELEPHONE
UE	ELECTRIC
UC	CABLE (TV)
UEC	ELECTRIC+CABLE
UET	ELECTRIC+TELEPHONE
UCT	CABLE+TELEPHONE
UECT	ELECTRIC+CABLE+TELEP.
G	GAS LINE
W	WATER LINE
S	SANITARY SEWER (SEPTIC)

ABOVE GROUND UTILITIES (AERIAL)

T	TELEPHONE
E	ELECTRIC
C	CABLE (TV)
EC	ELECTRIC+CABLE
ET	ELECTRIC+TELEPHONE
AER E&T	ELECTRIC+TELEPHONE
CT	CABLE+TELEPHONE
ECT	ELECTRIC+CABLE+TELEP.
	UTILITY POLE GUY WIRE

PROJECT CONSTRUCTION SYMBOLOGY

PROJECT DESIGN & LAYOUT SYMBOLOGY

CZ	CLEAR ZONE
	PLAN LAYOUT MATCHLINE

PROJECT CONSTRUCTION FEATURES

	TOP OF CUT SLOPE
	TOE OF FILL SLOPE
	STONE FILL
	BOTTOM OF DITCH ℄
	CULVERT PROPOSED
	STRUCTURE SUBSURFACE
PDF	PROJECT DEMARCATION FENCE
BF	BARRIER FENCE
	TREE PROTECTION ZONE (TPZ)
	STRIPING LINE REMOVAL
	SHEET PILES

CONVENTIONAL BOUNDARY SYMBOLOGY

BOUNDARY LINES

TOWN LINE	TOWN BOUNDARY LINE
COUNTY LINE	COUNTY BOUNDARY LINE
STATE LINE	STATE BOUNDARY LINE
	PROPOSED STATE R.O.W. (LIMITED ACCESS)
	PROPOSED STATE R.O.W.
	STATE ROW (LIMITED ACCESS)
	STATE ROW
	TOWN ROW
	PERMANENT EASEMENT LINE (P)
	TEMPORARY EASEMENT LINE (T)
	SURVEY LINE
P/L	PROPERTY LINE (P/L)
SR	SLOPE RIGHTS
6f	6F PROPERTY BOUNDARY
4f	4F PROPERTY BOUNDARY
HAZ	HAZARDOUS WASTE

EPSC LAYOUT PLAN SYMBOLOGY

EPSC MEASURES

	FILTER CURTAIN
	SILT FENCE
	SILT FENCE WOVEN WIRE
	CHECK DAM
	DISTURBED AREAS REQUIRING RE-VEGETATION
	EROSION MATTING

ENVIRONMENTAL RESOURCES

	WETLAND BOUNDARY
	RIPARIAN BUFFER ZONE
	WETLAND BUFFER ZONE
	SOIL TYPE BOUNDARY
T&E	THREATENED & ENDANGERED SPECIES
HAZ	HAZARDOUS WASTE AREA
AG	AGRICULTURAL LAND
HABITAT	FISH & WILDLIFE HABITAT
FLOOD PLAIN	FLOOD PLAIN
OHW	ORDINARY HIGH WATER (OHW)
	STORM WATER
	USDA FOREST SERVICE LANDS
	WILDLIFE HABITAT SUIT/CONN

ARCHEOLOGICAL & HISTORIC

ARCH	ARCHEOLOGICAL BOUNDARY
HISTORIC DIST	HISTORIC DISTRICT BOUNDARY
HISTORIC	HISTORIC AREA
H	HISTORIC STRUCTURE

CONVENTIONAL TOPOGRAPHIC SYMBOLOGY

EXISTING FEATURES

	ROAD EDGE PAVEMENT
	ROAD EDGE GRAVEL
	DRIVEWAY EDGE
	DITCH
	FOUNDATION
	FENCE (EXISTING)
	FENCE WOOD POST
	FENCE STEEL POST
	GARDEN
	ROAD GUARDRAIL
	RAILROAD TRACKS
	CULVERT (EXISTING)
	STONE WALL
	WALL
	WOOD LINE
	BRUSH LINE
	HEDGE
	BODY OF WATER EDGE
	LEDGE EXPOSED

VHB Vanasse Hangen Brustlin, Inc.

PROJECT NAME:	BRATTLEBORO
PROJECT NUMBER:	BRO 1442(35)

FILE NAME: z10J062LegendSheet.dgn	PLOT DATE: 10/14/2013
PROJECT LEADER: S.E. BURBANK	DRAWN BY: E.A. FIALA
DESIGNED BY: VTRANS	CHECKED BY: S.E. BURBANK
CONVENTIONAL SYMBOLOGY LEGEND	SHEET 11 OF 68

GPS CONTROL POINTS

HVCTRL #2

MAG NAIL SET

NORTH = 135124.4650
EAST = 1607422.7270
ELEV. = 541.0500

GENERAL LOCATION, WEST BRATTLEBORO, VT. FROM THE INTERSECTION OF VT ROUTE 9 AND SUNSET LAKE ROAD (T.H. 12), PROCEED NORTH ON SUNSET LAKE ROAD (T.H. 12) FOR 0.2 MI (0.3 KM) TO THE SOUTHWEST CORNER OF BRIDGE 7 OVER HALLADAY BROOK AND THE MARK ON THE LEFT. THE MARK IS SET IN THE PAVEMENT. SEE TRAVERSE TIES BELOW FOR TIE DISTANCES.

VCTRL #106

B 14 RESET 1988

NORTH = 134276.6160
EAST = 1608361.3210
ELEV. = 522.7390

GENERAL LOCATION, BRATTLEBORO, VT., ABOUT 3.5 MI (5.6 KM) WEST OF BRATTLEBORO, ABOUT 13 MI (20.9 KM) EAST OF WILMINGTON, AND ABOUT 9.5 MI (15.3 KM) NORTH OF THE MASSACHUSETTS/VERMONT STATE LINE. TO REACH FROM THE EAST END OF THE VT ROUTE 9 BRIDGE OVER I-91 IN BRATTLEBORO GO WEST ALONG VT ROUTE 9 FOR 2.6 MI (4.2 KM) TO THE INTERSECTION OF WESTGATE DRIVE LEFT AND WINDING HILL ROAD RIGHT. TURN RIGHT AND GO NORTH ALONG WINDING HILL ROAD FOR 0.1 MI (0.2 KM) TO THE SOUTH END OF THE BRIDGE OVER HALLADAY BROOK AND THE MARK ON THE LEFT, SET IN THE TOP OF THE WINGWALL AT THE SOUTHWEST CORNER OF THE BRIDGE. THE MARK IS A STATE OF VERMONT SURVEY MARK AND IS 18.4 FT (5.6 M) WEST OF AND ABOUT 1.6 FT (0.5 M) LOWER THAN THE CENTERLINE OF WINDING HILL ROAD, 78.1 FT (23.8 M) EAST OF POLE NO.7-0-27/7-0/3/3, 99.1 FT (30.2 M) NORTH OF POLE NO.2A (WITH LUMEN), AND 18.0 FT (5.5 M) NORTHEAST OF A WATER METER MANHOLE.

TRAVERSE TIES

HVCTRL #1

NORTH = 135346.2320
EAST = 1607405.2530
ELEV. = 544.4800

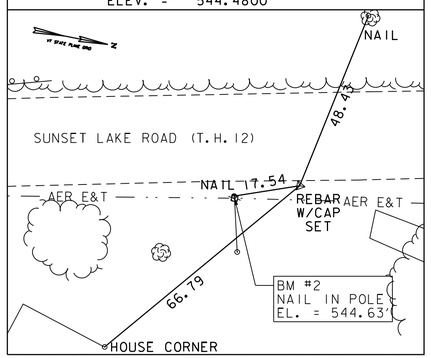

HVCTRL #2

NORTH = 135124.4650
EAST = 1607422.7270
ELEV. = 541.0500

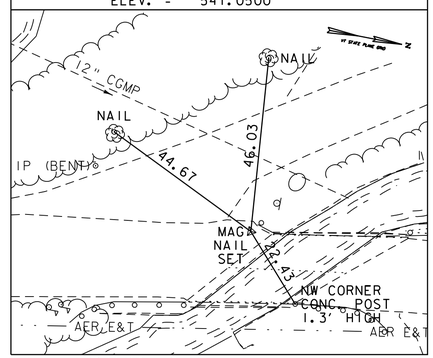

HVCTRL #3

NORTH = 134957.9520
EAST = 1607472.1130
ELEV. = 538.8600

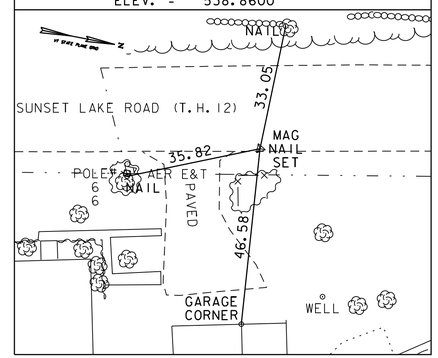

HVCTRL #4

NORTH = 135243.2470
EAST = 1607321.9680
ELEV. = 546.6300

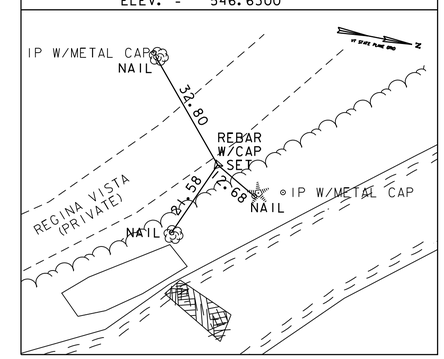

• Main Traverse Completed 11/15/10 by T.J.Gaudet and B.M.Klinefelter

DATUM

VERTICAL NAVD 88

HORIZONTAL NAD 83 (07)

Vanasse Hangen Brustlin, Inc.

PROJECT NAME: BRATTLEBORO
PROJECT NUMBER: BRO 1442(35)

FILE NAME: z10j062ti.dgn
PROJECT LEADER: S.E. BURBANK
DESIGNED BY: B.M. KLINEFELTER
TIE SHEET

PLOT DATE: 10/14/2013
DRAWN BY: B.M. KLINEFELTER
CHECKED BY: J.W. GOLEK
SHEET 12 OF 68

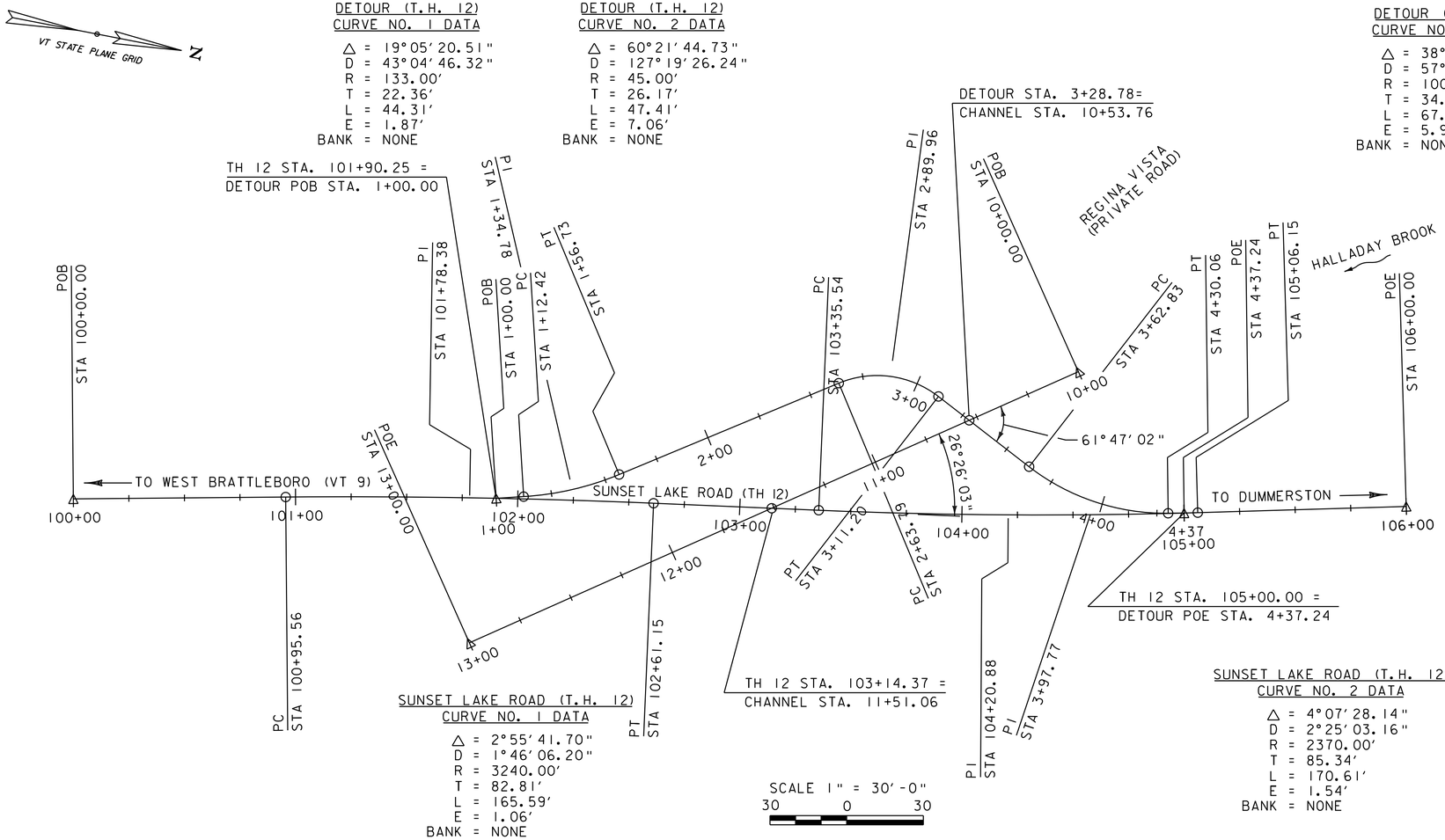

SUNSET LAKE ROAD (T.H. 12)
CURVE NO. 1 DATA

△ = 2°55'41.70"
D = 1°46'06.20"
R = 3240.00'
T = 82.81'
L = 165.59'
E = 1.06'
BANK = NONE

SUNSET LAKE ROAD (T.H. 12)
CURVE NO. 2 DATA

△ = 4°07'28.14"
D = 2°25'03.16"
R = 2370.00'
T = 85.34'
L = 170.61'
E = 1.54'
BANK = NONE

MAINLINE ALIGNMENT

Horizontal Alignment Name: TH 12 Proposed

	STATION	NORTHING	EASTING
Element: Linear			
POB (24)	100+00.00	134840.8468	1607485.0762
PC (25)	100+95.56	134934.4914	1607466.0249
Tangent Direction:	N 11°29'58.03" W		
Tangent Length:	95.56		
Element: Circular			
PC (25)	100+95.56	134934.4914	1607466.0249
PI	101+78.38	135015.6414	1607449.5155
CC (26)		135580.4132	1610640.9871
PT (27)	102+61.15	135097.5289	1607437.1733
Radius:	3240.00		
Delta:	2°55'41.70" Right		
Degree of Curvature:	1°46'06.20"		
Length:	165.59		
Tangent:	82.81		
Chord:	165.57		
Middle Ordinate:	1.06		
External:	1.06		
Tangent Direction:	N 11°29'58.03" W		
Radial Direction:	N 78°30'01.97" E		
Chord Direction:	N 10°02'07.18" W		
Radial Direction:	N 81°25'43.67" E		
Tangent Direction:	N 8°34'16.33" W		
Element: Linear			
PT (27)	102+61.15	135097.5289	1607437.1733
PC (28)	103+35.54	135171.0912	1607426.0859
Tangent Direction:	N 8°34'16.33" W		
Tangent Length:	74.39		
Element: Circular			
PC (28)	103+35.54	135171.0912	1607426.0859
PI	104+20.88	135255.4781	1607413.3669
CC (30)		134817.8702	1605082.5554
PT (31)	105+06.15	135338.7317	1607394.6115
Radius:	2370.00		
Delta:	4°07'28.14" Left		
Degree of Curvature:	2°25'03.16"		
Length:	170.61		
Tangent:	85.34		
Chord:	170.57		
Middle Ordinate:	1.53		
External:	1.54		
Tangent Direction:	N 8°34'16.33" W		
Radial Direction:	N 81°25'43.67" E		
Chord Direction:	N 10°38'00.40" W		
Radial Direction:	N 77°18'15.52" E		
Tangent Direction:	N 12°41'44.48" W		
Element: Linear			
PT (31)	105+06.15	135338.7317	1607394.6115
POE (29)	106+00.00	135430.2829	1607373.9868
Tangent Direction:	N 12°41'44.48" W		
Tangent Length:	93.85		

DETOUR ALIGNMENT

Horizontal Alignment Name: Detour

	STATION	NORTHING	EASTING
Element: Linear			
POB (13)	1+00.00	135027.5412	1607448.5065
PC (14)	1+12.42	135039.5643	1607445.3982
Tangent Direction:	N 14°29'41.61" W		
Tangent Length:	12.42		
Element: Circular			
PC (14)	1+12.42	135039.5643	1607445.3982
PI	1+34.78	135061.2153	1607439.8010
CC (15)		135006.2752	1607316.6316
PT (39)	1+56.73	135079.8452	1607427.4308
Radius:	133.00		
Delta:	19°05'20.51" Left		
Degree of Curvature (Arc):	43°04'46.32"		
Length:	44.31		
Tangent:	22.36		
Chord:	44.11		
Middle Ordinate:	1.84		
External:	1.87		
Tangent Direction:	N 14°29'41.61" W		
Radial Direction:	N 75°30'18.39" E		
Chord Direction:	N 24°02'21.87" W		
Radial Direction:	N 56°24'57.88" E		
Tangent Direction:	N 33°35'02.12" W		

Horizontal Alignment Name: Detour Proposed (Continued)

	STATION	NORTHING	EASTING
Element: Linear			
PT (39)	1+56.73	135079.8452	1607427.4308
PC (36)	2+63.79	135169.0338	1607368.2101
Tangent Direction:	N 33°35'02.12" W		
Tangent Length:	107.06		
Element: Circular			
PC (36)	2+63.79	135169.0338	1607368.2101
PI	2+89.96	135190.8362	1607353.7335
CC (37)		135193.9259	1607405.6985
PT (38)	3+11.20	135214.2004	1607365.5246
Radius:	45.00		
Delta:	60°21'44.73" Right		
Degree of Curvature (Arc):	127°19'26.24"		
Length:	47.41		
Tangent:	26.17		
Chord:	45.25		
Middle Ordinate:	6.10		
External:	7.06		
Tangent Direction:	N 33°35'02.12" W		
Radial Direction:	N 56°24'57.88" E		
Chord Direction:	N 3°24'09.76" W		
Radial Direction:	S 63°13'17.40" E		
Tangent Direction:	N 26°46'42.60" E		
Element: Linear			
PT (38)	3+11.20	135214.2004	1607365.5246
PC (21)	3+62.83	135260.2927	1607388.7858
Tangent Direction:	N 26°46'42.60" E		
Tangent Length:	51.63		

Horizontal Alignment Name: Detour Proposed (Continued)

	STATION	NORTHING	EASTING
Element: Circular			
PC (21)	3+62.83	135260.2927	1607388.7858
PI	3+97.77	135291.4903	1607404.5301
CC (22)		135305.3469	1607299.5103
PT (23)	4+30.06	135325.7039	1607397.4163
Radius:	100.00		
Delta:	38°31'27.38" Left		
Degree of Curvature (Arc):	57°17'44.81"		
Length:	67.24		
Tangent:	34.95		
Chord:	65.98		
Middle Ordinate:	5.60		
External:	5.93		
Tangent Direction:	N 26°46'42.60" E		
Radial Direction:	S 63°13'17.40" E		
Chord Direction:	N 7°30'58.91" E		
Radial Direction:	N 78°15'15.22" E		
Tangent Direction:	N 11°44'44.78" W		
Element: Linear			
PT (23)	4+30.06	135325.7039	1607397.4163
POE (35)	4+37.24	135332.7293	1607395.9556
Tangent Direction:	N 11°44'44.78" W		
Tangent Length:	7.18		

DATUM

VERTICAL	NAVD 88
HORIZONTAL	NAD 83 (07)

VHB Vanasse Hangen Brustlin, Inc.

PROJECT NAME: BRATTLEBORO
PROJECT NUMBER: BRO 1442(35)

FILE NAME: z10J062alg layout.dgn
PROJECT LEADER: S.E. BURBANK
DESIGNED BY: J.W. GOLEK
ALIGNMENT LAYOUT SHEET

PLOT DATE: 10/14/2013
DRAWN BY: J.W. GOLEK
CHECKED BY: S.E. BURBANK
SHEET 13 OF 68

VT STATE PLANE GRID

N

CONSTRUCT 11.5' PAVED APRON
STA. 102+69, LT - 41.5' WIDE

CONSTRUCT 12' PAVED DRIVE
STA. 103+59, RT - 12' WIDE

REMOVAL AND DISPOSAL OF GUARDRAIL
STA. 102+43 - 102+73, RT
STA. 102+92 - 102+96, LT
STA. 103+03 - 103+27, RT
STA. 103+31 - 104+46, LT

COLD PLANING, BITUMINOUS PAVEMENT
STA. 101+35 - 101+55, LT & RT
STA. 105+25 - 105+45, LT & RT

SPECIAL PROVISION (BRIDGE RAILING, GALVANIZED HDSB/FASCIA MOUNTED/STEEL TUBING)
STA. 102+43 - 103+25, RT
STA. 102+88 - 104+08, LT

STEEL BEAM GUARDRAIL, GALV.
STA. 102+00 - 102+12, RT
STA. 103+20, 38.4' LT - 103+34, 44.5' LT
STA. 103+25 - 103+36, RT
STA. 104+63 - 104+76, LT

GUARDRAIL APPROACH SECTION, GALVANIZED HD STEEL BEAM W/8 FEET POSTS
STA. 102+18 - 102+43, RT
STA. 102+92, 24.58' LT - 102+88, LT
STA. 104+08 - 104+33, LT

RELOCATE MAILBOX, MULTIPLE SUPPORT
STA. 102+39, RT

RELOCATE MAILBOX, SINGLE SUPPORT
STA. 103+83, RT

STEEL BEAM GUARDRAIL, GALVANIZED W/8 FEET POSTS
STA. 102+12 - 102+18, RT
STA. 102+92, 24.58' LT - 103+20, 38.4' LT
STA. 104+33 - 104+63, LT

ANCHOR FOR STEEL BEAM RAIL
STA. 102+06, RT
STA. 103+25, 40.75' LT
STA. 103+30, RT
STA. 104+69, LT

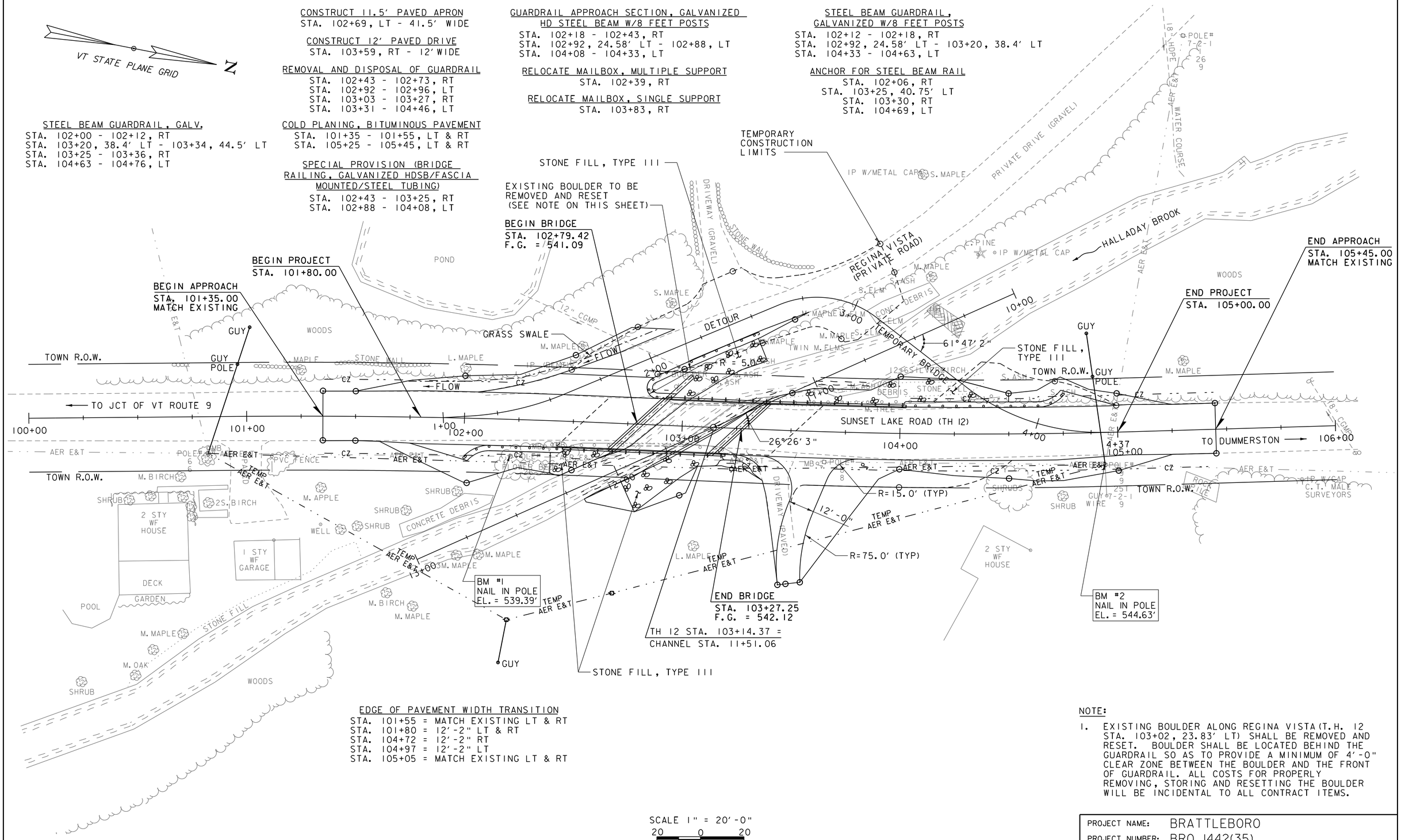

EDGE OF PAVEMENT WIDTH TRANSITION
STA. 101+55 = MATCH EXISTING LT & RT
STA. 101+80 = 12'-2" LT & RT
STA. 104+72 = 12'-2" RT
STA. 104+97 = 12'-2" LT
STA. 105+05 = MATCH EXISTING LT & RT

SCALE 1" = 20'-0"
20 0 20

NOTE:

1. EXISTING BOULDER ALONG REGINA VISTA (T.H. 12 STA. 103+02, 23.83' LT) SHALL BE REMOVED AND RESET. BOULDER SHALL BE LOCATED BEHIND THE GUARDRAIL SO AS TO PROVIDE A MINIMUM OF 4'-0" CLEAR ZONE BETWEEN THE BOULDER AND THE FRONT OF GUARDRAIL. ALL COSTS FOR PROPERLY REMOVING, STORING AND RESETTING THE BOULDER WILL BE INCIDENTAL TO ALL CONTRACT ITEMS.

VHB Vanasse Hangen Brustlin, Inc.

PROJECT NAME: BRATTLEBORO	
PROJECT NUMBER: BRO 1442(35)	
FILE NAME: z10j062bdr_nul.dgn	PLOT DATE: 10/14/2013
PROJECT LEADER: S.E. BURBANK	DRAWN BY: E.A. FIALA
DESIGNED BY: S.E. BURBANK	CHECKED BY: S.E. BURBANK
LAYOUT SHEET	SHEET 14 OF 68

VHB 57428

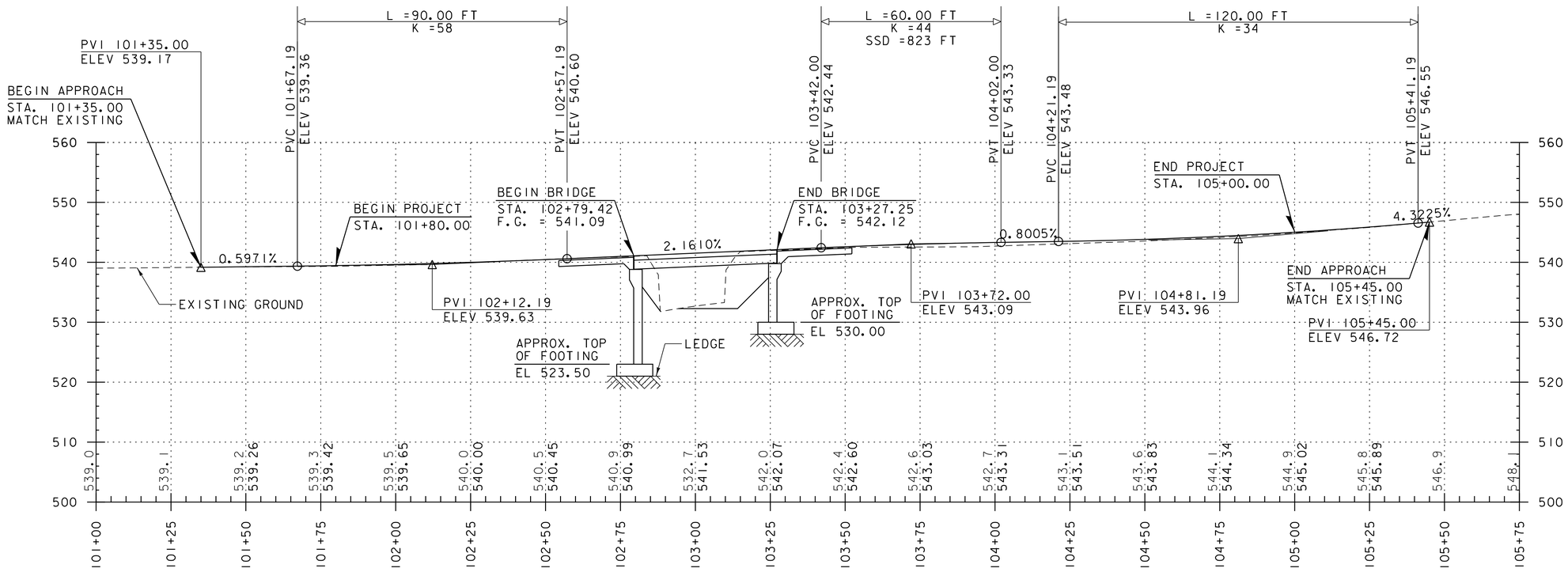

TH 12 PROFILE

SCALE 1" = 20' HORIZONTAL
1" = 10' VERTICAL

THE GRADES SHOWN TO THE NEAREST TENTH ARE THE ORIGINAL GROUND ELEVATIONS ALONG THE PROPOSED ALIGNMENT. THE GRADES SHOWN TO THE NEAREST HUNDREDTH ARE THE PROPOSED GRADES FOR THE NEW ALIGNMENT.

Vanasse Hangen Brustlin, Inc.

PROJECT NAME: BRATTLEBORO	
PROJECT NUMBER: BRO 1442(35)	
FILE NAME: z10j062pro.dgn	PLOT DATE: 10/14/2013
PROJECT LEADER: S.E. BURBANK	DRAWN BY: E.A. FIALA
DESIGNED BY: E.A. FIALA	CHECKED BY: S.E. BURBANK
PROFILE SHEET	SHEET 15 OF 68

VHB 57428

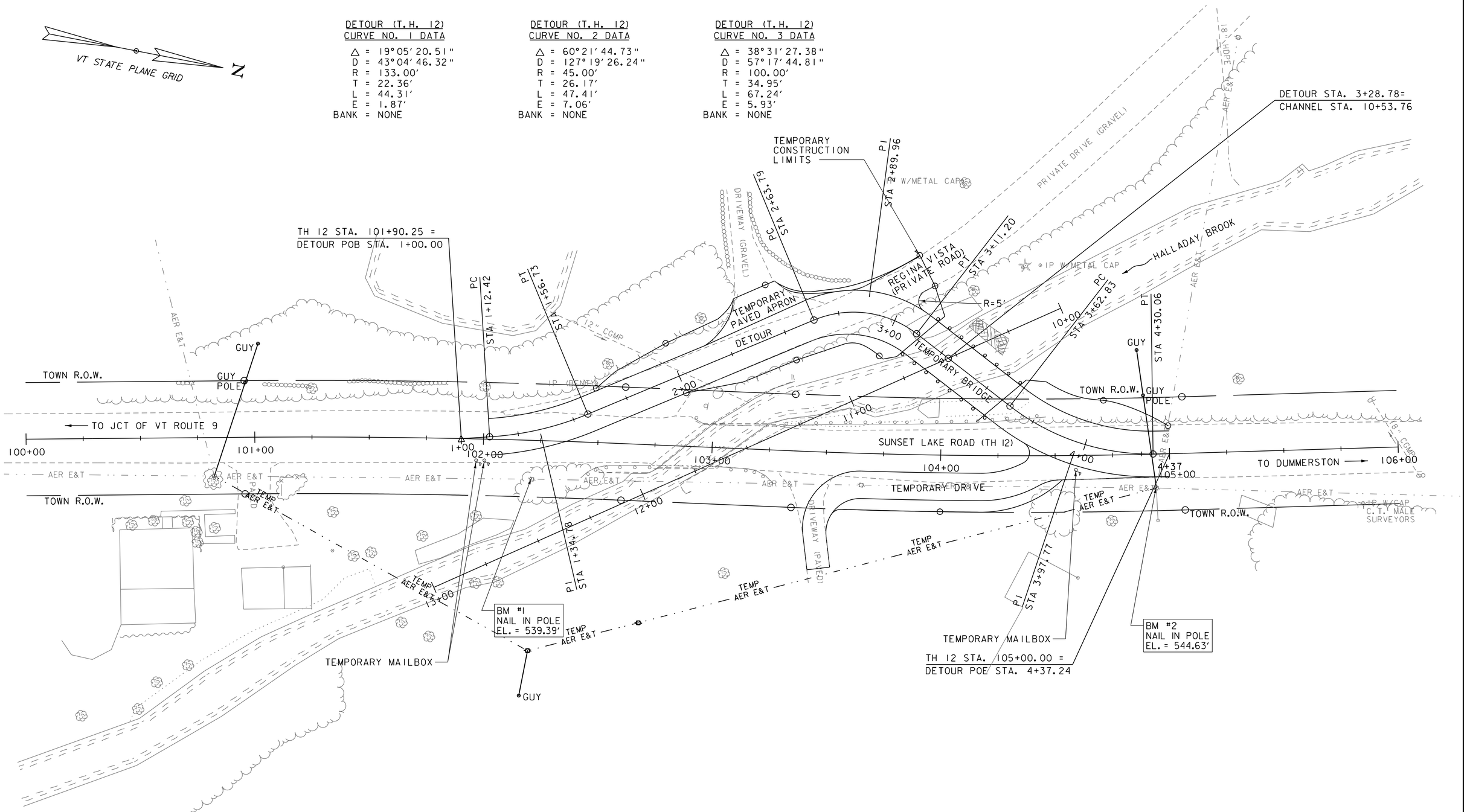

DETOUR (T.H. 12)
CURVE NO. 1 DATA

△ =	19°05′20.51″
D =	43°04′46.32″
R =	133.00′
T =	22.36′
L =	44.31′
E =	1.87′
BANK =	NONE

DETOUR (T.H. 12)
CURVE NO. 2 DATA

△ =	60°21′44.73″
D =	127°19′26.24″
R =	45.00′
T =	26.17′
L =	47.41′
E =	7.06′
BANK =	NONE

DETOUR (T.H. 12)
CURVE NO. 3 DATA

△ =	38°31′27.38″
D =	57°17′44.81″
R =	100.00′
T =	34.95′
L =	67.24′
E =	5.93′
BANK =	NONE

EDGE OF DETOUR PAVEMENT WIDTH TRANSITION

STA. 1+12.42	= 8′-0″	LT & RT
STA. 2+15.42	= 8′-0″	LT
STA. 2+59.66	= 8′-0″	RT
STA. 2+63.79	= 9′-5″	LT
STA. 3+11.20	= 10′-0″	LT
STA. 3+12.95	= 10′-0″	RT
STA. 4+37.22	= 10′-0″	LT & RT

SCALE 1" = 20′-0"
20 0 20

Vanasse Hangen Brustlin, Inc.

PROJECT NAME:	BRATTLEBORO
PROJECT NUMBER:	BRO 1442(35)

FILE NAME: z10j062tcpl.dgn	PLOT DATE: 10/14/2013
PROJECT LEADER: S.E. BURBANK	DRAWN BY: E.A. FIALA
DESIGNED BY: S.E. BURBANK	CHECKED BY: S.E. BURBANK
TRAFFIC CONTROL PLAN (1 OF 3)	SHEET 16 OF 68

VHB 57428

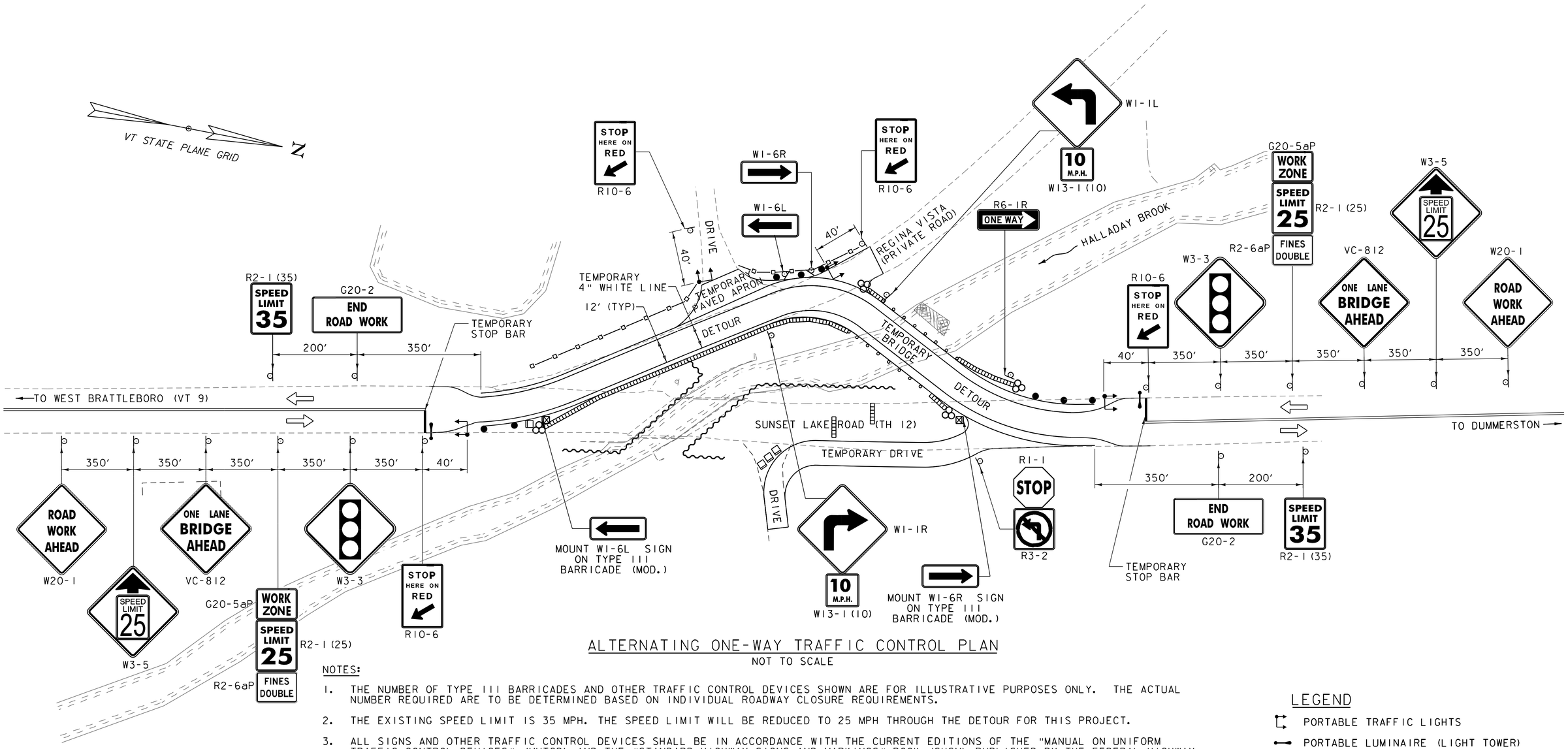

ALTERNATING ONE-WAY TRAFFIC CONTROL PLAN

NOT TO SCALE

NOTES:

1. THE NUMBER OF TYPE III BARRICADES AND OTHER TRAFFIC CONTROL DEVICES SHOWN ARE FOR ILLUSTRATIVE PURPOSES ONLY. THE ACTUAL NUMBER REQUIRED ARE TO BE DETERMINED BASED ON INDIVIDUAL ROADWAY CLOSURE REQUIREMENTS.
2. THE EXISTING SPEED LIMIT IS 35 MPH. THE SPEED LIMIT WILL BE REDUCED TO 25 MPH THROUGH THE DETOUR FOR THIS PROJECT.
3. ALL SIGNS AND OTHER TRAFFIC CONTROL DEVICES SHALL BE IN ACCORDANCE WITH THE CURRENT EDITIONS OF THE "MANUAL ON UNIFORM TRAFFIC CONTROL DEVICES" (MUTCD) AND THE "STANDARD HIGHWAY SIGNS AND MARKINGS" BOOK (SHSM) PUBLISHED BY THE FEDERAL HIGHWAY ADMINISTRATION (FHWA).
4. SOLID SUBSTRATE CONSTRUCTION SIGNS SHALL HAVE RETRO-REFLECTIVE SHEETING EQUAL TO OR EXCEEDING "AMERICAN SOCIETY FOR TESTING AND MATERIALS" (ASTM D 4956) TYPE VII, VIII, OR IX REQUIREMENTS, UNLESS OTHERWISE NOTED. SOLID SUBSTRATE REGULATORY SIGNS (WHITE BACKGROUND) SHALL HAVE RETRO-REFLECTIVE SHEETING EQUAL TO OR EXCEEDING ASTM D 4956 TYPE III.
5. SIGNS SHALL BE ERECTED BEFORE THE START OF ANY WORK AND SHALL BE COVERED UNTIL WORK COMMENCES. DURING PERIODS OF INACTIVITY OR UPON COMPLETION OF THE WORK, EACH SIGN SHALL BE ERECTED IN A NEAT AND WORKMANLIKE MANNER. SIGNS SHALL BE REMOVED UPON COMPLETION OF THE WORK AT THE DISCRETION OF THE ENGINEER.
6. FIXED SIGNS SHALL BE SET SECURELY IN THE GROUND. THE BOTTOM OF A SIGN SHALL BE AT LEAST SEVEN FEET ABOVE THE EDGE OF PAVEMENT.
7. DURING NON-WORK PERIODS, ALL EQUIPMENT SHALL BE MOVED TO A LOCATION OFF PAVED SHOULDERS AND OUTSIDE THE CLEAR ZONE, OR PROTECTED BY TEMPORARY TRAFFIC BARRIER OR GUARDRAIL.
8. AN ENERGY ABSORPTION ATTENUATOR RATED FOR 35 MPH SHALL BE LOCATED AT THE END OF THE BARRIER.
9. PAYMENT FOR ALL ON AND OFF-PROJECT SIGNING AND TRAFFIC CONTROL DEVICES, WITH THE EXCEPTION OF TEMPORARY TRAFFIC BARRIER, WILL BE INCLUDED IN THE UNIT PRICE BID FOR CONTRACT ITEM 641.10. PAYMENT FOR TEMPORARY TRAFFIC BARRIER WILL BE INCLUDED IN THE UNIT PRICE BID FOR CONTRACT ITEM 528.10.

LEGEND

- PORTABLE TRAFFIC LIGHTS
- PORTABLE LUMINAIRE (LIGHT TOWER)
- REFLECTIVE PLASTIC DRUM
- FLOW OF TRAFFIC
- TYPE III BARRICADE
- TYPE III BARRIDACE (MOD.)
- ENERGY ABSORPTION ATTENUATOR
- CONCRETE MEDIAN BARRIER
- SPECIAL PROVISION (FABRIC SCREENING FENCE) (SEE TCP 3 OF 3)

Vanasse Hangen Brustlin, Inc.

PROJECT NAME: BRATTLEBORO	
PROJECT NUMBER: BRO 1442(35)	
FILE NAME: z10j062tcp2.dgn	PLOT DATE: 10/14/2013
PROJECT LEADER: M.A. COLGAN	DRAWN BY: E.A. FIALA
DESIGNED BY: E.A. FIALA	CHECKED BY: S.E. BURBANK
TRAFFIC CONTROL PLAN (2 OF 3)	SHEET 17 OF 68

IDENTIFICATION NUMBER	SIZE OF SIGN WIDTH (IN)	SIZE OF SIGN HEIGHT (IN)	TEXT	NUMBER OF SIGNS REQ'D	AREA (SQ FT)	TOTAL AREA (SQ FT)	REMARKS
G20-2	48	24	END ROAD WORK	2	8.00	16.00	
G20-5aP	24	18	WORK ZONE	2	3.00	12.00	MOUNT ABOVE R2-125
R1-1	24	24	STOP	1	4.00	4.00	---
R2-1(25)	18	24	SPEED LIMIT 25	2	3.00	12.00	---
R2-1(35)	18	24	SPEED LIMIT 35	2	3.00	6.00	---
R2-6aP	18	24	FINES DOUBLE	2	3.00	6.00	MOUNT BELOW R2-1(25)
R3-2	24	24		1	4.00	4.00	---
R6-1R	36	18	ONE WAY	1	4.00	4.00	---
R10-6	24	36	STOP HERE ON RED	4	6.00	24.00	---
VC-812	36	36	ONE LANE BRIDGE AHEAD	2	9.00	18.00	MOUNT ON TWO POSTS
W1-1L	36	36		1	9.00	9.00	MOUNT ON TWO POSTS
W1-1R	36	36		1	9.00	9.00	MOUNT ON TWO POSTS
W1-6L	36	18		2	3.00	6.00	MOUNT ON TWO POSTS
W1-6R	36	18		2	3.00	6.00	MOUNT ON TWO POSTS

IDENTIFICATION NUMBER	SIZE OF SIGN WIDTH (IN)	SIZE OF SIGN HEIGHT (IN)	TEXT	NUMBER OF SIGNS REQ'D	AREA (SQ FT)	TOTAL AREA (SQ FT)	REMARKS
W3-3	36	36		2	9.00	18.00	MOUNT ON TWO POSTS
W3-5	36	36	SPEED LIMIT 25	2	9.00	18.00	MOUNT ON TWO POSTS
W13-1(10)	18	18	10 M.P.H.	2	2.25	4.5	MOUNT BELOW W1-1L OR W1-1R
W20-1	36	36	ROAD WORK AHEAD	2	9.00	18.00	MOUNT ON TWO POSTS

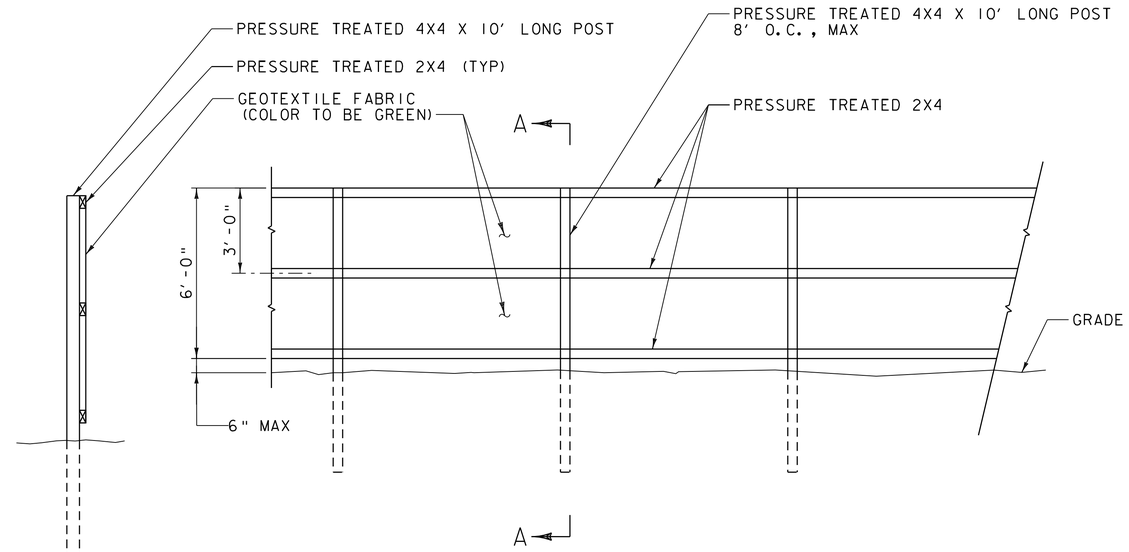

SECTION A-A
NOT TO SCALE

FABRIC SCREENING FENCE
NOT TO SCALE

NOTES:

1. SEE EPSC CONSTRUCTION CONDITIONS PLAN AND TRAFFIC CONTROL PLAN (2 OF 3) FOR LOCATION OF FABRIC SCREENING FENCE.
2. ALL COSTS ASSOCIATED WITH CONSTRUCTING, INSTALLING, MAINTAINING, AND REMOVING THE FABRIC SCREENING FENCE SHALL BE INCLUDED IN THE UNIT PRICE BID FOR ITEM 900.640, "SPECIAL PROVISION (FABRIC SCREENING FENCE)".

Vanasse Hangen Brustlin, Inc.

PROJECT NAME: BRATTLEBORO
PROJECT NUMBER: BRO 1442(35)

FILE NAME: z10j062tcp3.dgn
PROJECT LEADER: M.A. COLGAN
DESIGNED BY: E.A. FIALA
TRAFFIC CONTROL PLAN (3 OF 3)

PLOT DATE: 10/14/2013
DRAWN BY: E.A. FIALA
CHECKED BY: S.E. BURBANK
SHEET 18 OF 68

VHB 57428

VT STATE PLANE GRID

N

DRIVEWAY (GRAVEL)

REGINA VISTA (PRIVATE ROAD)

PLANTING AREA 1 (SEE PLANTING AREA 1 PLAN AND SCHEDULE)

HALLADAY BROOK

DETOUR

3+00

SAVE (M. ELM)

SAVE (M. MAPLE)

PLANTING AREA 2 (SEE PLANTING AREA 2 PLAN AND SCHEDULE)

2+00

SAVE (S. ASH)

TOWN R.O.W.

SUNSET LAKE ROAD (TH 12)

4+00

103+00

104+00

105+00

4+37

DRIVEWAY (PAVED)

TOWN R.O.W.

LEGEND

M. = MEDIUM TREE
S. = SMALL TREE

SCALE 1" = 10'-0"

10 0 10

Vanasse Hangen Brustlin, Inc.

PROJECT NAME:	BRATTLEBORO
PROJECT NUMBER:	BRO 1442(35)

FILE NAME: z10j062plnt.dgn	PLOT DATE: 10/14/2013
PROJECT LEADER: S.E. BURBANK	DRAWN BY: D.A. GINGRAS
DESIGNED BY: P.B. WERTS	CHECKED BY: S.E. BURBANK
PLANTING PLAN	SHEET 19 OF 68

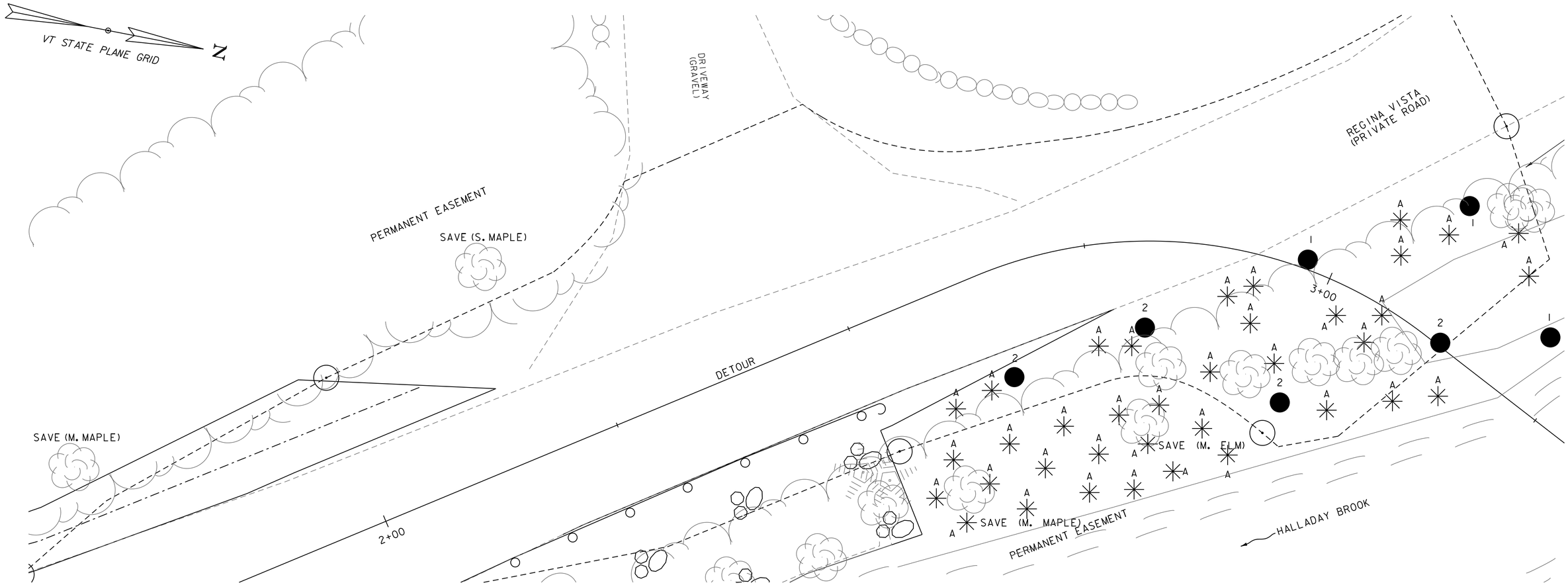

Trees				
Planting Plan Code	Common Name	Scientific Name	Total Number of Trees	Planting Stock Size
1	Red Maple	*Acer rubrum*	3	2.5"-3" (dia)
2	Silver Maple	*Acer saccharinum*	4	2"-2.5" (dia)

- TOTAL NUMBER OF TREES IN PLANTING AREA I

Shrubs				
Planting Plan Code	Common Name	Scientific Name	Total Number of Shrubs	Size of Stock (Height)
A	Red-Osier Dogwood	*Cornus Sericea*	37	36"-48"

- TOTAL NUMBER OF SHRUBS IN PLANTING AREA I

LEGEND

—TREE

—SHRUB

SCALE 1" = 5'-0"

5 0 5

Vanasse Hangen Brustlin, Inc.

PROJECT NAME: BRATTLEBORO
PROJECT NUMBER: BRO 1442(35)

FILE NAME: z10j062plnt_schl.dgn
PROJECT LEADER: S.E. BURBANK
DESIGNED BY: P.B. WERTS
PLANTING AREA I PLAN AND SCHEDULE

PLOT DATE: 10/14/2013
DRAWN BY: D.A. GINGRAS
CHECKED BY: S.E. BURBANK
SHEET 20 OF 68

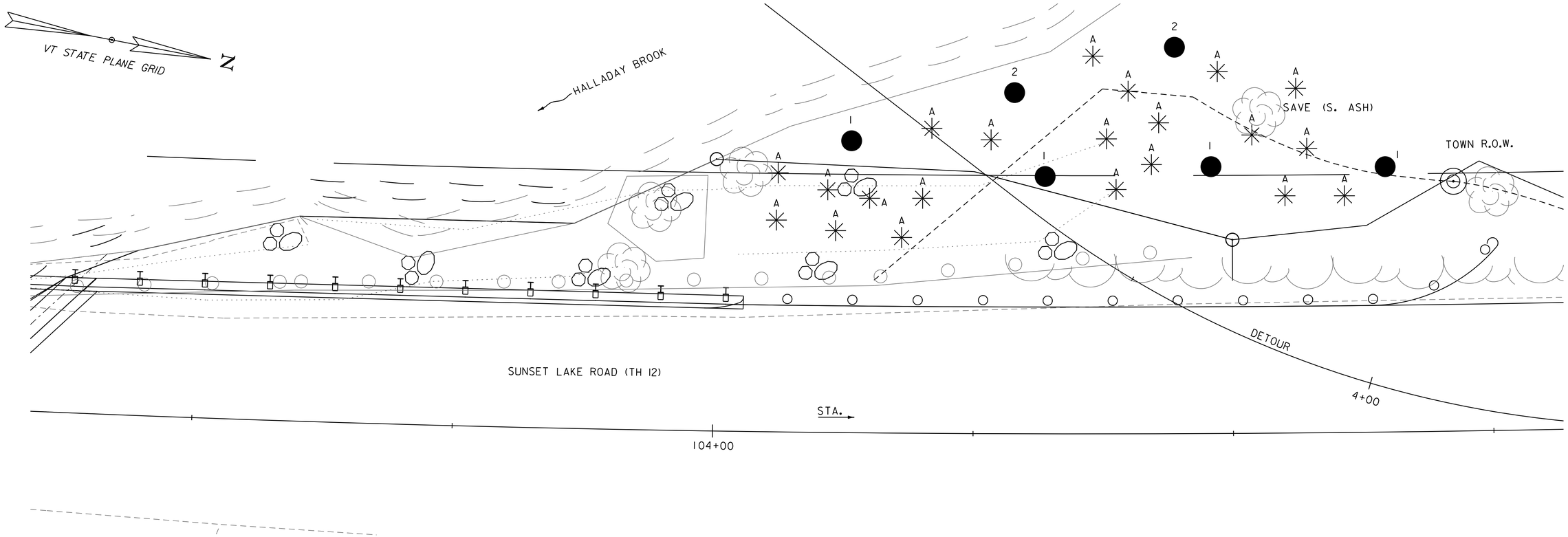

Trees				
Planting Plan Code	Common Name	Scientific Name	Total Number of Trees	Planting Stock Size
1	Red Maple	*Acer rubrum*	4	2.5"-3" (dia)
2	Silver Maple	*Acer saccharinum*	2	2"-2.5" (dia)

- TOTAL NUMBER OF TREES IN PLANTING AREA 2

Shrubs				
Planting Plan Code	Common Name	Scientific Name	Total Number of Shrubs	Size of Stock (Height)
A	Red-Osier Dogwood	*Cornus Sericea*	21	36"-48"

- TOTAL NUMBER OF SHRUBS IN PLANTING AREA 2

LEGEND

— TREE

— SHRUB

SCALE 1" = 5'-0"

5 0 5

Vanasse Hangen Brustlin, Inc.

PROJECT NAME: BRATTLEBORO
PROJECT NUMBER: BRO 1442(35)

FILE NAME: z10j062plnt_sch2.dgn
PROJECT LEADER: S.E. BURBANK
DESIGNED BY: P.B. WERTS
PLANTING AREA 2 PLAN AND SCHEDULE

PLOT DATE: 10/14/2013
DRAWN BY: D.A. GINGRAS
CHECKED BY: S.E. BURBANK
SHEET 21 OF 68

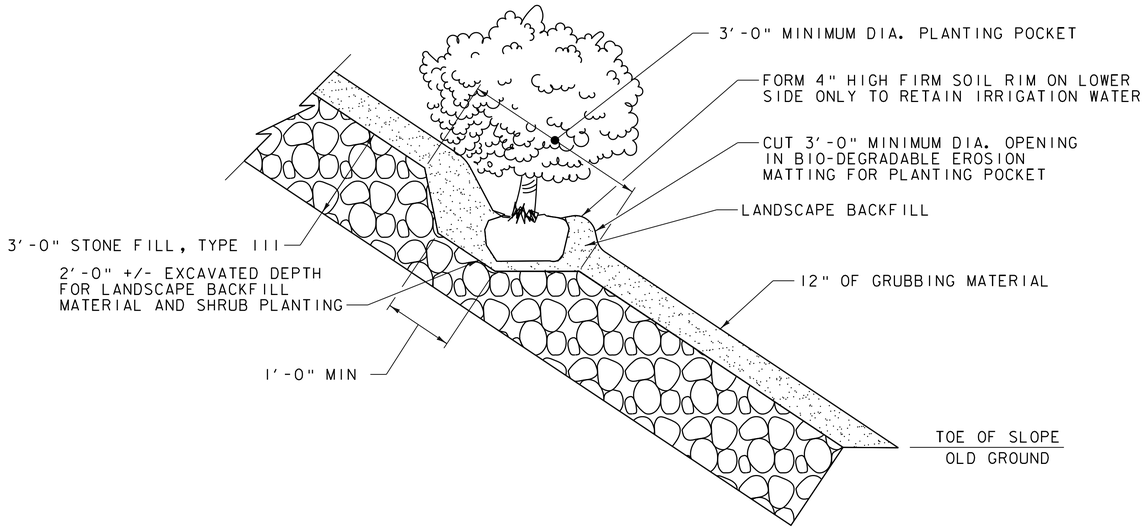

SHRUB PLANTING POCKET CROSS-SECTION IN "GRUBBING" MATERIAL OVER STONE FILL

NOT TO SCALE

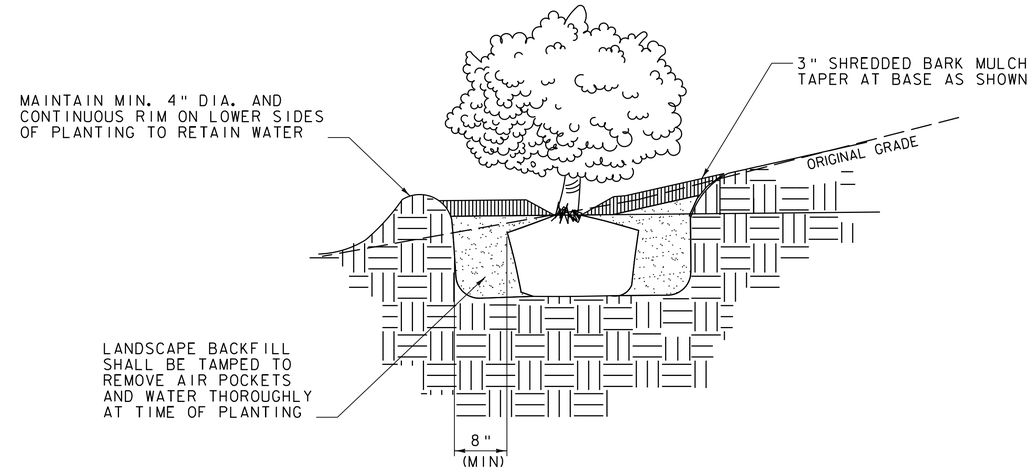

SHRUB PLANTING ON SLOPES DETAIL

NOT TO SCALE

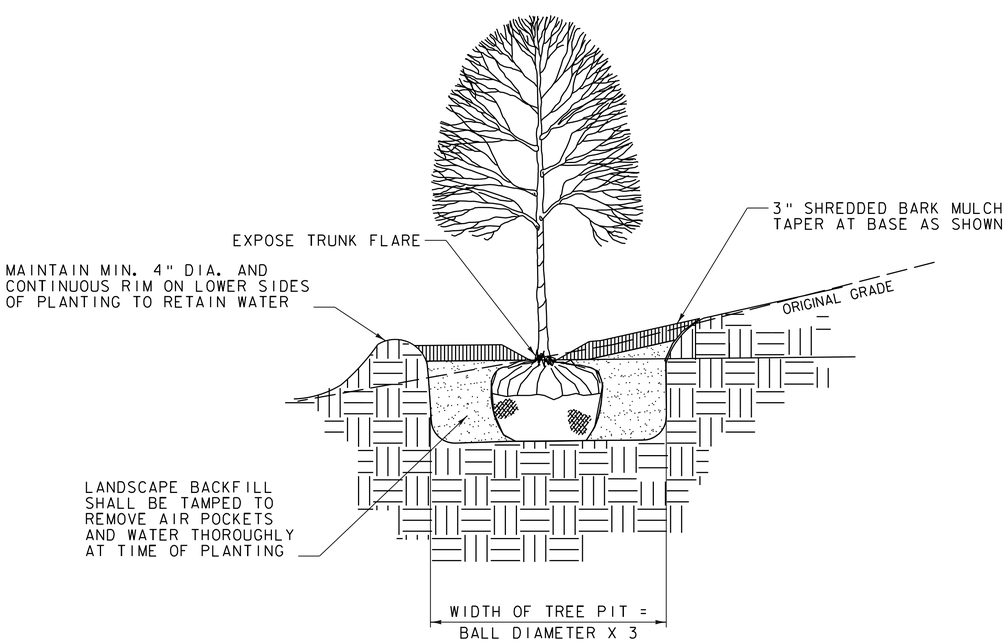

TREE PLANTING ON SLOPES DETAIL

NOT TO SCALE

LANDSCAPE NOTES:

1. ALL PLANTING LOCATIONS SHALL BE STAKED OUT PRIOR TO PLANTING. THE ENGINEER IN CONSULTATION WITH THE AGENCY'S CONSULTANT FIELD NATURALIST MAY ADJUST THE STAKES AS NEEDED PRIOR TO INSTALLATION. ADJUSTMENTS TO THE PLANTING DESIGN AND LAYOUT MAY BE REQUIRED BASED UPON ACTUAL FIELD CONDITIONS.
2. ALL LANDSCAPE CONSTRUCTION ACTIVITIES SHALL BE CONFINED TO WITHIN THE LIMITS OF DISTURBANCE AS IDENTIFIED ON THE PLANS OR AS OTHERWISE DIRECTED BY THE ENGINEER.
3. LANDSCAPE BACKFILL SHALL CONSIST OF ONE HALF SCREENED TOPSOIL, ONE QUARTER COMPOST, AND ONE QUARTER NATIVE MATERIAL AS APPROVED BY THE ENGINEER. TAMP TO REMOVE AIR POCKETS AND WATER THOROUGHLY IMMEDIATELY AFTER PLANTING. TREES TO RECEIVE A MINIMUM OF 10 GALLONS AT EACH WATERING, TWICE WEEKLY DURING THE ESTABLISHMENT PERIOD. SHRUBS TO RECEIVE A MINIMUM OF 5 GALLONS AT EACH WATERING, TWICE WEEKLY DURING THE ESTABLISHMENT PERIOD. UNSUITABLE NATIVE MATERIAL SHALL BE REPLACED WITH IMPORTED APPROVED TOPSOIL AS DIRECTED BY ENGINEER.
4. MYCORRHIZA SHALL BE APPLIED TO ALL TREE AND SHRUB PLANTINGS PER MANUFACTURER'S INSTRUCTION AND FURNISHED IN ACCORDANCE WITH SUBSECTION 755.07.
5. A 3-4" LAYER OF BARK MULCH AROUND PLANTINGS SHALL BE AGED, DOUBLE SHREDDED AND IN ITS NATURAL UNDYED STATE. EXTEND MULCH LAYER 6" BEYOND PLANT PIT TO PREVENT DRYING AIR FROM REACHING ROOT BALL. TAPER MULCH TO BASE OF TRUNK FLARE AS WELL. AVOID STOCKPILING MULCH FOR LONG PERIODS TO PREVENT ANAEROBIC CONDITION AND BUILD UP OF TOXINS.
6. ALL TREES SHALL BE GROWN AS TREE FORMS AND TRAINED IN THE NURSERY TO A SINGLE STRAIGHT TRUNK.
7. SIDE SLOPE PLANTING IN STONE FILL: DIG INDIVIDUAL 3' DIA. PLANTING POCKETS, ONE FOR EACH SHRUB AS LOCATED ON THE PLANTING PLANS.
8. LANDSCAPE BACKFILL SHALL BE PLACED FOR TREES AT TIME OF FINAL GRADING SO TREES CAN BE PLANTED AT A LATER DATE AND MATERIAL WILL BE IN PLACE.
9. PLACE TREE IN HOLE SO THAT MAIN ORDER ROOTS ARE AT OR SLIGHTLY ABOVE FINISHED GRADE. REMOVE ALL EXCESS SOIL ON TOP OF THE ROOT FLARE AND ABOVE MAIN ORDER ROOTS. AVOID PLANTING TOO DEEP. ONCE IN THE PLANTING HOLE, REMOVE TWINE AND BURLAP FROM TOP ½ OF BALL; IF SYNTHETIC, REMOVE COMPLETELY. CUT WIRE BASKETS AND REMOVE ENTIRE SIDES.

VHB Vanasse Hangen Brustlin, Inc.

PROJECT NAME: BRATTLEBORO	
PROJECT NUMBER: BRO 1442(35)	
FILE NAME: z10j062details_plants.dgn	PLOT DATE: 10/14/2013
PROJECT LEADER: S.E. BURBANK	DRAWN BY: E.A. FIALA
DESIGNED BY: E.A. FIALA	CHECKED BY: S.E. BURBANK
PLANTING DETAILS	SHEET 22 OF 68

VHB 57428

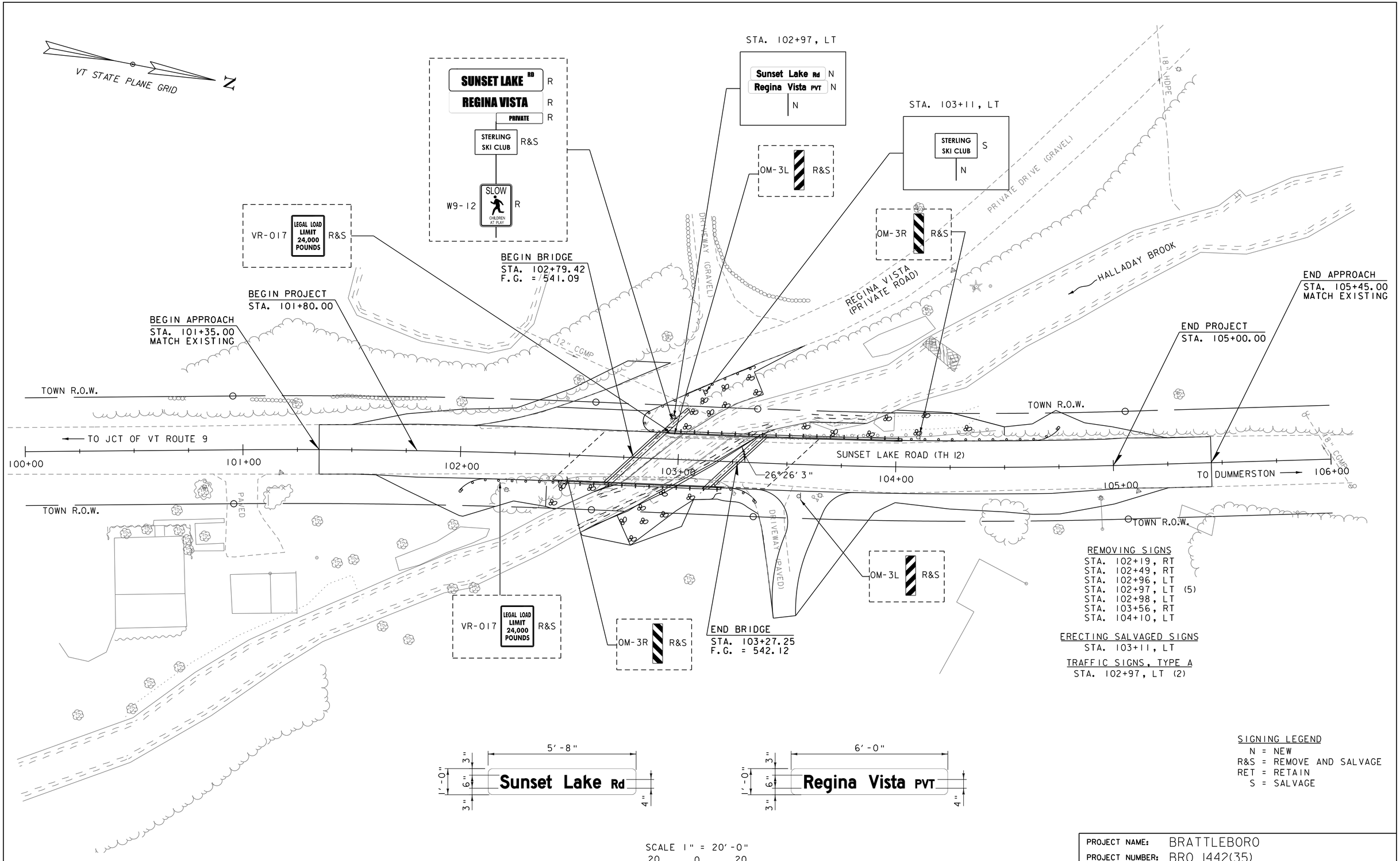

Vanasse Hangen Brustlin, Inc.

PROJECT NAME: BRATTLEBORO	
PROJECT NUMBER: BRO 1442(35)	
FILE NAME: z10j062tsl.dgn	PLOT DATE: 10/14/2013
PROJECT LEADER: S.E. BURBANK	DRAWN BY: J.L. LEMIEUX
DESIGNED BY: S.E. BURBANK	CHECKED BY: S.E. BURBANK
TRAFFIC SIGNS & LINE STRIPING SHEET	SHEET 23 OF 68

VHB 57428

STATE OF VERMONT
AGENCY OF TRANSPORTATION

TRAFFIC SIGN SUMMARY SHEET

MILE MARKER, STATION, OR SIGN NUMBER	SIGN LEGEND	SIGN DIMENSIONS EA	SIGN DIMENSIONS WIDTH (IN)	SIGN DIMENSIONS HEIGHT (IN)	NEW & SALVAGED SIGNS "A"	NEW & SALVAGED SIGNS "B"	NEW & SALVAGED SIGNS SALV SIGN	NEW & SALVAGED SIGNS SALV TIS	EXIST POST RETAIN	EXIST POST SALVAGE	NEW SIGN POSTS NO. OF POSTS	FLANGED CHANNEL LB/FT 1.12	FLANGED CHANNEL LB/FT 2.0	FLANGED CHANNEL LB/FT 3.0	SQUARE STEEL (IN) LB/FT 1.75	SQUARE STEEL (IN) LB/FT 2.0	SQUARE STEEL (IN) LB/FT 2.5	ANCHOR	SLEEVE	TUBULAR ALUMINUM Ø (IN) LB/FT 3.0	TUBULAR ALUMINUM Ø (IN) LB/FT 4.0	TUBULAR ALUMINUM Ø (IN) LB/FT 4.0 MOD	FOUND-ATION	TUBULAR STEEL Ø (IN) LB/FT 3.0	TUBULAR STEEL Ø (IN) LB/FT 3.5	TUBULAR STEEL Ø (IN) LB/FT 4.0	TUBULAR STEEL Ø (IN) LB/FT 5.0	W-SHAPE STEEL FTG. SIZE 24"	W-SHAPE STEEL FTG. SIZE 30"	W-SHAPE STEEL WEIGHT	W-SHAPE STEEL POST SIZE	SIGN FRAME REQUIRED	REMARKS	SIGN DETAIL DETAIL ON SHEET NUMBER	SIGN DETAIL STD. SHEET NUMBER
											OPTION ITEMS																									
SUNSET LAKE RD (T.H. 12)																																				
102+97, LT 102+97, LT	Sunset Lake Rd Regina Vista PVT	1 1	68 72	12 12	5.67 6.00						1					X		X															STEET SIGNS SHALL HAVE GREEN BACKGROUND WITH WHITE LETTERING	23	
103+11, LT	STERLING SKI CLUB	1					X				1					X		X																		

SOIL CLASSIFICATION

AASHTO

A1	Gravel and Sand
A3	Fine Sand
A2	Silty or Clayey Gravel and Sand
A4	Silty Soil - Low Compressibility
A5	Silty Soil - Highly Compressible
A6	Clayey Soil - Low Compressibility
A7	Clayey Soil - Highly Compressible

ROCK QUALITY DESIGNATION

R.Q.D. (%)	ROCK DESCRIPTION
<25	Very Poor
25 to 50	Poor
51 to 75	Fair
76 to 90	Good
>90	Excellent

SHEAR STRENGTH

UNDRAINED SHEAR STRENGTH IN P.S.F.	CONSISTENCY
<250	Very Soft
250-500	Soft
500-1000	Med. Stiff
1000-2000	Stiff
2000-4000	Very Stiff
>4000	Hard

CORRELATION GUIDE OF "N" TO DENSITY/CONSISTENCY

DENSITY (GRANULAR SOILS) N	DESCRIPTIVE TERM	CONSISTENCY (COHESIVE SOILS) N	DESCRIPTIVE TERM
<5	Very Loose	<2	Very Soft
5-10	Loose	2-4	Soft
11-24	Med. Dense	5-8	Med. Stiff
25-50	Dense	9-15	Stiff
>50	Very Dense	16-30	Very Stiff
		31-60	Hard
		>60	Very Hard

COMMONLY USED SYMBOLS

▼	Water Elevation
⊗	Standard Penetration Boring
⊕	Auger Boring
⊙	Rod Sounding
S	Sample
N	Standard Penetration Test Blow Count Per Foot For: 2" O.D. Sampler 1 3/8" I.D. Sampler Hammer Weight Of 140 Lbs. Hammer Fall Of 30"
VS	Field Vane Shear Test
US	Undisturbed Soil Sample
B	Blast
DC	Diamond Core
MD	Mud Drill
WA	Wash Ahead
HSA	Hollow Stem Auger
AX	Core Size 1 1/8"
BX	Core Size 1 5/8"
NX	Core Size 2 1/8"
M	Double Tube Core Barrel Used
LL	Liquid Limit
PL	Plastic Limit
PI	Plasticity Index
NP	Non Plastic
w	Moisture Content (Dry Wgt. Basis)
D	Dry
M	Moist
MTW	Moist To Wet
W	Wet
Sat	Saturated
Bo	Boulder
Gr	Gravel
Sa	Sand
Si	Silt
Cl	Clay
HP	Hardpan
Le	Ledge
NLTD	No Ledge To Depth
CNPF	Can Not Penetrate Further
TLOB	Top of Ledge Or Boulder
NR	No Recovery
Rec.	Recovery
%Rec.	Percent Recovery
RQD	Rock Quality Designation
CBR	California Bearing Ratio
<	Less Than
>	Greater Than
R	Refusal (N > 100)
VTSPG	NAD83 - See Note 7

COLOR

blk	Black	pnk	Pink
bl	Blue	pu	Purple
brn	Brown	rd	Red
dk	Dark	tn	Tan
gry	Gray	wh	White
gn	Green	yel	Yellow
lt	Light	mltc	Multicolored
or	Orange		

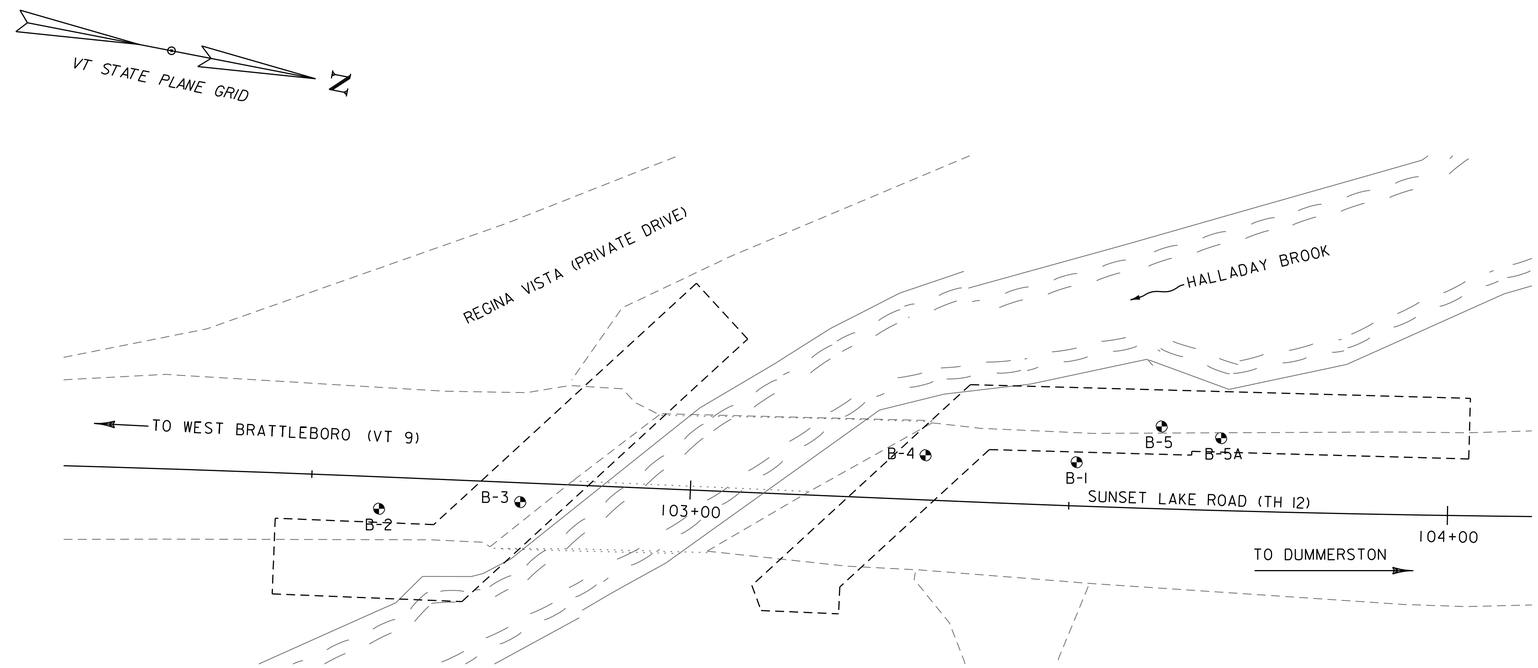

BORING CHART

HOLE NO.	SURV. STATION	OFFSET	GROUND ELEV.	ELEV. TLOB
B-1	103+50.31	5.78 LT	N/A	N/A
B-2	102+59.04	4.22 RT	N/A	N/A
B-3	102+77.63	2.54 RT	540.0	521.0
B-4	103+30.82	5.89 LT	541.0	528.0
B-5	103+61.93	10.87 LT	541.0	532.8
B-5A	103+69.87	9.57 LT	N/A	N/A

BORING LAYOUT

SCALE 1" = 10'-0"
10 0 10

DEFINITIONS (AASHTO)

BEDROCK (LEDGE) - Rock in its native location of indefinite thickness.

BOULDER - A rock fragment with an average dimension > 12 inches.

COBBLE - Rock fragments with an average dimension between 3 and 12 inches.

GRAVEL - Rounded particles of rock < 3" and > 0.0787" (#10 sieve).

SAND - Particles of rock < 0.0787" (#10 sieve) and > 0.0029" (#200 sieve).

SILT - Soil < 0.0029" (#200 sieve), non or slightly plastic and exhibits no strength when air-dried.

CLAY - Fine grained soil, exhibits plasticity when moist and considerable strength when air-dried.

VARVED - Alternate layers of silt and clay.

HARDPAN - Extremely dense soil, cemented layer, not softened when wet.

MUCK - Soft organic soil (containing > 10% organic material.

MOISTURE CONTENT - Weight of water divided by dry weight of soil.

FLOWING SAND - Granular soil so saturated (loose) that it flows into drill casing during extraction of wash rod.

STRIKE - Angle from magnetic north to line of intersection of bed with a horizontal plane.

DIP - Inclination of bed with a horizontal plane.

GENERAL NOTES

1. The subsurface explorations shown herein were made between in Febuary, 2004 by Mikes Boring and Coring and November, 2011 by the Agency.
2. Soil and rock classifications, properties and descriptions are based on engineering interpretation from available subsurface information by Mikes Coring and Boring and the Agency. and may not necessarily reflect actual variations in subsurface conditions that may be encountered between individual boring or sample locations.
3. Observed water levels and/or conditions indicated are as recorded at the time of exploration and may vary according to the prevailing rainfall, methods of exploration and other factors.
4. Engineering judgment was exercised in preparing the subsurface information presented herein. Analysis and interpretation of subsurface data was performed and interpreted for Agency design and estimating purposes. Presentation of the information in the Contract is intended to provide the Contractor access to the same data available to the Agency. The subsurface information is presented in good faith and is not intended as a substitute for personal investigation, independent interpretation, independent analysis or judgment by the Contractor.
5. Pictorial structure details shown on the boring plan layout or soils profile are for illustrative purposes only and may not accurately portray final contract details.
6. Terminology used on boring logs to describe the hardness, degree of weathering, and spacing of fractures, joints and other discontinuities in the bedrock is defined in the AASHTO Manual on Subsurface Investigations, 1988.
7. Northing and Easting coordinates are shown in Vermont State Plane Grid North American Datum 1983 in survey feet.

Vanasse Hangen Brustlin, Inc.

PROJECT NAME:	BRATTLEBORO
PROJECT NUMBER:	BRO 1442(35)

FILE NAME: z10j062bor.dgn	PLOT DATE: 10/14/2013
PROJECT LEADER: M.A. COLGAN	DRAWN BY: E.A. FIALA
DESIGNED BY: S.E. BURBANK	CHECKED BY: S.E. BURBANK
BORING INFORMATION SHEET	SHEET 25 OF 68

MIKE'S BORING & CORING
PO Box 75 • East Barre, Vermont 05649 • 802 476-5073

TO: Brian Austin DuBois and King, Inc. P.O. Box 339 Randolph, VT 05060-0339	PROJECT NAME: Brattleboro Bridge LOCATION: Brattleboro, VT MBC JOB #: 05001	SHEET: 1 DATE: 2-7-04 HOLE #: B-1 LINE & STA. OFFSET:

Ground Water Observations *Not measurable* at 0 hrs	Augers-Size I.D. 3.25" Split Spoon 2" Hammer Wt. 140# Hammer Fall 30"	Surface Elevation: Date Started: 2-7-04 Date Completed: 2-7-04 Boring Foreman: Michael McGinley Inspector: Soils Engineer:

LOCATION OF BORING: As marked

Sample Depths From/To (Feet)	Type of Sample	Blows per 6" on Sampler	Moisture Density or Consist.	Strata Change Elev.	Soil Identification	Sample No.	Sample Pen. Inches	Sample Rec. Inches
5'-7'	D	13/9/13/20	Damp		Sand and gravel	1	24	5
9'-11'	D	44/45/28/100 for 3"	Wet		Sand, gravel and rock	2	21	8
					Set up to core			
11'9"-12'9"	C	11:15-11:23						
12'9"-13'9"	C	11:23-11:27						
13'9"-14'9"	C	11:27-11:30						
14'9"-15'9"	C	11:31-11:36						
15'9"-16'9"	C	11:36-11:40						

Ground Surface to 9' Used 3.25" augers: Then S.S. to 11' set up to core

Earth Borings	11'
Rock Coring	5'
Samples:	2
HOLE NUMBER	B-1

MIKE'S BORING & CORING
PO Box 75 • East Barre, Vermont 05649 • 802 476-5073

TO: Brian Austin DuBois and King, Inc. P.O. Box 339 Randolph, VT 05060-0339	PROJECT NAME: Brattleboro Bridge LOCATION: Brattleboro, VT MBC JOB #: 05001	SHEET: 2 DATE: 2-4-04 HOLE #: B-2 LINE & STA. OFFSET:

Ground Water Observations *Not measurable* at 0 hrs	Augers-Size I.D. 3.25" Split Spoon 2" Hammer Wt. 140# Hammer Fall 30"	Surface Elevation: Date Started: 2-4-04 Date Completed: 2-7-04 Boring Foreman: Michael McGinley Inspector: Soils Engineer:

LOCATION OF BORING: As marked

Sample Depths From/To (Feet)	Type of Sample	Blows per 6" on Sampler	Moisture Density or Consist.	Strata Change Elev.	Soil Identification	Sample No.	Sample Pen. Inches	Sample Rec. Inches
5'-7'	D	51/25/31/7	Damp		Sand and stones	1	24	6
10'-12'	D	100 for 4"	Wet	8'	Auger refusal at 8' end of split spoon wet sand rock	2	20	18
15'-17'	D	77/100 for 4"	Wet		Sand and rock	3	10	10
					Set up to core			
13'-14'	C	12:05=12:15						
14'-15'	C	12:15-12:20						
15'-16'	C	12:00-12:24						
16'-17'	C	12:32-12:40						
17'-18'	C	12:40-12:46						
18'-19'	C	12:46-12:55						
19'-20'	C	12:55-1:00						
20'-21'	C	1:00-1:-06						
21'-22'	C	1:-06-1:13						
22'-23'	C	1:13-1:19						

Ground Surface to 15" Used 3.25" augers: Then S.S. to 17' set up to core

Earth Borings	17'
Rock Coring	10'
Samples:	3
HOLE NUMBER	B-2

MIKE'S BORING & CORING P.O. Box 75 East Barre, VT 05649	To: Brian Austin DuBois and King, Inc. P.O. Box 339 Randolph, VT 05060-0339

Date	1-5-05
Job Name/Site	Brattleboro Bridge
Job Number	05001
Crew	Mike and Roland
Inspector	Aaron

HOLE #	OFFSET	STATIC LEVEL	SOILS	AUGER REFUSAL (Feet)	DEPTH (Feet)
P-1	N/A	10'	4" asphalt into medium sand, gravel and cobbles	13'	13'
P-2	N/A	N/A	4" asphalt into medium sand, gravel and cobbles	12'	12'

TOTAL FOOTAGE: 25'
AUGERS USED: Solid

VHB Vanasse Hangen Brustlin, Inc.

PROJECT NAME: BRATTLEBORO	
PROJECT NUMBER: BRO 1442(35)	
FILE NAME: z10j062borlogs.dgn	PLOT DATE: 10/14/2013
PROJECT LEADER: S.E. BURBANK	DRAWN BY: E.A. FIALA
DESIGNED BY: MIKE'S BORING & CORING	CHECKED BY: S.E. BURBANK
BORING LOGS (1 OF 3)	SHEET 26 OF 68

VHB 57428

STATE OF VERMONT
AGENCY OF TRANSPORTATION
MATERIALS & RESEARCH SECTION
SUBSURFACE INFORMATION

BORING LOG

Brattleboro Bridge Replacement
23275.1001.32000

Boring No.: **B-3**
Page No.: 1 of 2
Pin No.: BRO 1442(35)
Checked By: JACM

Boring Crew: S. Clavette, K. Owens
Date Started: 11/15/11 Date Finished: 11/15/11
VTSPG NAD83: N 135114.20 ft E 1607437.23 ft
Station: 102+77.63 Offset: 2.54 FT
Ground Elevation: 540.0 ft

	Casing	Sampler
Type:	WASH BORE	SS
I.D.:	4. in	1.25 in
Hammer Wt:	300 lb	140 lb.
Hammer Fall:	30 in.	30 in.
Hammer/Rod Type:	Safety	
Rig:	B53 Mobile	C_E = 1.0

Groundwater Observations		
Date	Depth (ft)	Notes
11/15/11	6.5	

ABUTMENT NO. 1
TOP OF FOOTING
EL=523.5

Depth (ft)	Strata (1)	CLASSIFICATION OF MATERIALS (Description)	Run (Dip deg.)	Core Rec. % (RQD %)	Drill Rate minutes/ft	Blows/6" (N Value)	Moisture Content %	Gravel %	Sand %	Fines %
		ASPHALT PAVEMENT, 0.0 ft - 0.5 ft								
		(FILL), f.m.c. SAND, little silt, little f.c. gravel, compact, gray - light brown, moist, Rec. = 1.0 ft				27-23-14-10 (37)				
2.5		(FILL), Similar Soil, medium compact, Rec. = 0.9 ft				9-5-9-14 (14)				
		(FILL), f.m. SAND, Some Silt, little f.c. gravel, medium compact, dark brown, moist								
5.0		(FILL), f.c. GRAVEL, Some f.m.c. Sand, little silt, loose, light brown, moist, Rec. = 0.5 ft				9-9-8-5 (17)				
		(SM), f.m.c. SAND, Some Silt, little f.c. gravel, trace organics, loose, brown, wet, Rec. = 1.2 ft				2-1-6-4 (7)	20.7	39.9	45.3	14.8
7.5		(SP), f.m.c. SAND, Some f.c. Gravel, trace silt, trace organics, loose, brown, wet								
		(SP), Similar Soil, no organics, very compact, light brown, wet, Rec. = 0.7 ft				28-87-42-35 (>100)				
10.0		(SP), grades to Some f.c. Gravel, light brown, wet, Rec. = 0.6 ft				38-42-34-41 (76)				
12.5		(Completely Weathered Bedrock), SILT, Some f.c. Gravel, little f.m.c. sand, very compact, black - gray - brown, moist, Rec. = 0.7 ft				56-48-48-51 (96)				
15.0		(Completely Weathered Bedrock), f.c. GRAVEL, f.m.c. SAND, little silt, very compact, light brown - gray - white, moist, Rec. = 1.2 ft				64-73-66-82 (>100)	9.5	44.4	39.4	16.2
17.5		(Completely Weathered Bedrock), C. Gravel, little silt, trace f.m.c. sand, very compact, gray - orange, moist, Rec. = 0.1 ft				100/1" (>100)				
		19.0 ft - 24.0 ft, Gneiss, hard, slightly to moderately weathered, very close fractures, gray, Poor rock, NXDC	R-1 (?)	100 (32)	0.15	Top of Bedrock @ 19.0 ft				

Notes:
1. Stratification lines represent approximate boundary between material types. Transition may be gradual.
2. N Values have not been corrected for hammer energy. C_E is the hammer energy correction factor.
3. Water level readings have been made at times and under conditions stated. Fluctuations of groundwater may occur due to other factors than those present at the time measurements were made.

BORING LOG 23275_BRO1442(35)_BORINGS_CHA STYLE.GPJ VERMONT AOT GDT 12/6/11

STATE OF VERMONT
AGENCY OF TRANSPORTATION
MATERIALS & RESEARCH SECTION
SUBSURFACE INFORMATION

BORING LOG

Brattleboro Bridge Replacement
23275.1001.32000

Boring No.: **B-3**
Page No.: 2 of 2
Pin No.: BRO 1442(35)
Checked By: JACM

Boring Crew: S. Clavette, K. Owens
Date Started: 11/15/11 Date Finished: 11/15/11
VTSPG NAD83: N 135114.20 ft E 1607437.23 ft
Station: 102+77.63 Offset: 2.54 FT
Ground Elevation: 540.0 ft

	Casing	Sampler
Type:	WASH BORE	SS
I.D.:	4. in	1.25 in
Hammer Wt:	300 lb	140 lb.
Hammer Fall:	30 in.	30 in.
Hammer/Rod Type:	Safety	
Rig:	B53 Mobile	C_E = 1.0

Groundwater Observations		
Date	Depth (ft)	Notes
11/15/11	6.5	

Depth (ft)	Strata (1)	CLASSIFICATION OF MATERIALS (Description)	Run (Dip deg.)	Core Rec. % (RQD %)	Drill Rate minutes/ft	Blows/6" (N Value)	Moisture Content %	Gravel %	Sand %	Fines %
22.5										
25.0		24.0 ft - 29.0 ft, Gneiss, hard, moderately weathered, gray, Poor rock, NXDC	R-2 (?)	100 (57)	0.16					
27.5										
		Hole stopped @ 29.0 ft								
30.0										
32.5										
35.0										
37.5										

Remarks:
1.Casing driven through asphalt to obtain first sample.
2.Casing and spoon refusal at 16.5'. Top of rock estimated at 16.5'. Roller bit advanced to refusal at 19' to obtain competent rock information.
3.Boring backfilled with cuttings and bituminous cold patch.

Notes:
1. Stratification lines represent approximate boundary between material types. Transition may be gradual.
2. N Values have not been corrected for hammer energy. C_E is the hammer energy correction factor.
3. Water level readings have been made at times and under conditions stated. Fluctuations of groundwater may occur due to other factors than those present at the time measurements were made.

BORING LOG 23275_BRO1442(35)_BORINGS_CHA STYLE.GPJ VERMONT AOT GDT 12/6/11

STATE OF VERMONT
AGENCY OF TRANSPORTATION
MATERIALS & RESEARCH SECTION
SUBSURFACE INFORMATION

BORING LOG

Brattleboro Bridge Replacement
23275.1001.32000

Boring No.: **B-4**
Page No.: 1 of 2
Pin No.: BRO 1442(35)
Checked By: JACM

Boring Crew: S. Clavette, K. Owens
Date Started: 11/15/11 Date Finished: 11/16/11
VTSPG NAD83: N 135165.55 ft E 1607420.96 ft
Station: 103+30.82 Offset: -5.89 FT
Ground Elevation: 541.0 ft

	Casing	Sampler
Type:	WASH BORE	SS
I.D.:	4. in	1.25 in
Hammer Wt:	300 lb	140 lb.
Hammer Fall:	30 in.	30 in.
Hammer/Rod Type:	Safety	
Rig:	B53 Mobile	C_E = 1.0

Groundwater Observations		
Date	Depth (ft)	Notes
11/16/11	7.0	

ABUTMENT NO. 2
TOP OF FOOTING
EL=530.0

Depth (ft)	Strata (1)	CLASSIFICATION OF MATERIALS (Description)	Run (Dip deg.)	Core Rec. % (RQD %)	Drill Rate minutes/ft	Blows/6" (N Value)	Moisture Content %	Gravel %	Sand %	Fines %
		ASPHALT PAVEMENT, 0.0 ft - 0.5 ft								
		(FILL), f.m. SAND, little silt, trace f.c. gravel, medium compact, brown/gray, moist, Rec. = 1.0 ft				12-7-6-5 (13)				
2.5		(FILL), grades to Some Silt, little f.c. gravel, medium compact, brown/gray, moist, Rec. = 0.5 ft				5-3-12-14 (15)				
5.0		(FILL), f.c. GRAVEL, Some f.m.c. Sand, trace silt, medium compact, gray, moist, Rec. = 0.4 ft				7-5-18-17 (23)	7.1	59.6	30.7	9.7
		(FILL), Similar Soil, very compact, brown/gray, moist, Rec. = 0.5 ft				23-23-41-18 (64)				
7.5		(SM), f.m. SAND, little f. gravel, little silt, medium compact, brown, wet, Rec. = 0.3 ft				17-10-3-5 (13)				
10.0		(Completely Weathered Bedrock), f.m.c. SAND, little f.c. gravel, trace silt, brown/orange, moist, Rec. = 0.5 ft				27-46-100/5" (>100)				
12.5		13.0 ft - 13.7 ft, Gneiss, hard, moderately weathered, gray, Not competent NXDC	R-1 (?)	43 (0)	0.11	Top of Bedrock @ 13.0 ft				
15.0		14.0 ft - 19.0 ft, Gneiss, hard, moderately weathered, close fractures, gray, Good rock, NXDC	R-2 (?)	100 (88)	0.086					
17.5		19.0 ft - 24.0 ft, Gneiss, hard, slightly weathered, gray, Good rock, NXDC	R-3 (?)	92 (76)	0.1					

Notes:
1. Stratification lines represent approximate boundary between material types. Transition may be gradual.
2. N Values have not been corrected for hammer energy. C_E is the hammer energy correction factor.
3. Water level readings have been made at times and under conditions stated. Fluctuations of groundwater may occur due to other factors than those present at the time measurements were made.

BORING LOG 23275_BRO1442(35)_BORINGS_CHA STYLE.GPJ VERMONT AOT GDT 12/6/11

Vanasse Hangen Brustlin, Inc.

PROJECT NAME: BRATTLEBORO
PROJECT NUMBER: BRO 1442(35)

FILE NAME: z10j062borlogs.dgn
PROJECT LEADER: S.E. BURBANK
DESIGNED BY: VTRANS
BORING LOGS (2 OF 3)

PLOT DATE: 10/14/2013
DRAWN BY: E.A. FIALA
CHECKED BY: S.E. BURBANK
SHEET 27 OF 68

VHB 57428

STATE OF VERMONT
AGENCY OF TRANSPORTATION
MATERIALS & RESEARCH SECTION
SUBSURFACE INFORMATION

BORING LOG

Brattleboro Bridge Replacement
23275.1001.32000

Boring No.: **B-4**
Page No.: 2 of 2
Pin No.: BRO 1442(35)
Checked By: JACM

Boring Crew: S. Clavette, K. Owens
Date Started: 11/15/11 Date Finished: 11/16/11
VTSPG NAD83: N 135165.55 ft E 1607420.96 ft
Station: 103+30.82 Offset: -5.89 FT
Ground Elevation: 541.0 ft

	Casing	Sampler
Type:	WASH BORE	SS
I.D.:	4. in	1.25 in
Hammer Wt:	300 lb	140 lb.
Hammer Fall:	30 in.	30 in.
Hammer/Rod Type:	Safety	
Rig:	B53 Mobile	C_E = 1.0

Groundwater Observations		
Date	Depth (ft)	Notes
11/16/11	7.0	

Depth (ft)	Strata (1)	CLASSIFICATION OF MATERIALS (Description)	Run (Dip deg.)	Core Rec. % (RQD %)	Drill Rate minutes/ft	Blows/6" (N Value)	Moisture Content %	Gravel %	Sand %	Fines %
22.5										
		Hole stopped @ 24.0 ft								
25.0										
27.5										
30.0										
32.5										
35.0										
37.5										

Remarks:
1. Casing driven through asphalt to obtain first sample.
2. Coarse gravel fragment lodged in shoe of spoon at 8.5'.
3. Casing and spoon refusal at 13'. Core barrel jammed at 13.7'. Advanced roller bit to refusal at 14.0' to obtain competent rock information.
4.Boring backfilled with cuttings and bituminous cold patch.

Notes:
1. Stratification lines represent approximate boundary between material types. Transition may be gradual.
2. N Values have not been corrected for hammer energy. C_E is the hammer energy correction factor.
3. Water level readings have been made at times and under conditions stated. Fluctuations of groundwater may occur due to other factors than those present at the time measurements were made.

BORING LOG 23275_BRO144235_BORINGS_CHA STYLE.GPJ VERMONT AOT.GDT 12/6/11

STATE OF VERMONT
AGENCY OF TRANSPORTATION
MATERIALS & RESEARCH SECTION
SUBSURFACE INFORMATION

BORING LOG

Brattleboro Bridge Replacement
23275.1001.32000

Boring No.: **B-5**
Page No.: 1 of 1
Pin No.: BRO 1442(35)
Checked By: JACM

Boring Crew: S. Clavette, K. Owens
Date Started: 11/16/11 Date Finished: 11/16/11
VTSPG NAD83: N 135195.42 ft E 1607411.28 ft
Station: 103+61.93 Offset: -10.87 FT
Ground Elevation: 541.0 ft

	Casing	Sampler
Type:	H.S.A.	SS
I.D.:	2.5 in	1.25 in
Hammer Wt:	N.A.	140 lb.
Hammer Fall:	N.A.	30 in.
Hammer/Rod Type:	Safety	
Rig:	B53 Mobile	C_E = 1.0

Groundwater Observations		
Date	Depth (ft)	Notes
11/16/11		No water observed.

WINGWALL NO. 3
TOP OF FOOTING
EL=530.0

Depth (ft)	Strata (1)	CLASSIFICATION OF MATERIALS (Description)	Blows/6" (N Value)	Moisture Content %	Gravel %	Sand %	Fines %
		ASPHALT PAVEMENT, 0.0 ft - 0.5 ft					
		(FILL), f.m.c. SAND, Some f. Gravel, little silt, compact, light brown, moist, Rec. = 1.1 ft	20-19-16-13 (35)	5.1	34.8	48.8	16.4
2.5		(SM), f.m.c. SAND, little silt, trace organics, medium compact, brown, moist to wet, Rec. = 0.9 ft	11-12-10-7 (22)				
5.0		(Completely Weathered Bedrock), f.c. GRAVEL, little f.m.c. sand, trace silt, compact, brown/white, moist, Rec. = 0.2 ft	18-19-23-35 (42)				
7.5		(Completely Weathered Bedrock), f.m.c. SAND, little f.c. gravel, trace silt, very compact, light brown/white, moist, Rec. = 0.4 ft	52-52				
		Hole stopped @ 8.2 ft — Top of Bedrock @ 8.2 ft					
10.0							
12.5							
15.0							
17.5							

Remarks:
1. Auger through pavement to obtain first sample.
2. Auger refusal at 8.2'.
3. Offset 8' north to B-5A to verify depth of refusal on bedrock.
4.Boring backfilled with cuttings and bituminous cold patch.

Notes:
1. Stratification lines represent approximate boundary between material types. Transition may be gradual.
2. N Values have not been corrected for hammer energy. C_E is the hammer energy correction factor.
3. Water level readings have been made at times and under conditions stated. Fluctuations of groundwater may occur due to other factors than those present at the time measurements were made.

BORING LOG 23275_BRO144235_BORINGS_CHA STYLE.GPJ VERMONT AOT.GDT 12/6/11

STATE OF VERMONT
AGENCY OF TRANSPORTATION
MATERIALS & RESEARCH SECTION
SUBSURFACE INFORMATION

BORING LOG

Brattleboro Bridge Replacement
23275.1001.32000

Boring No.: **B-5A**
Page No.: 1 of 1
Pin No.: BRO 1442(35)
Checked By: JACM

Boring Crew: S. Clavette, K. Owens
Date Started: 11/16/11 Date Finished: 11/16/11
VTSPG NAD83:
Station: 103+69.87 Offset: -9.57 FT
Ground Elevation:

	Casing	Sampler
Type:	H.S.A.	AUGER
I.D.:	2.5 in	1.25 in
Hammer Wt:	N.A.	N.A.
Hammer Fall:	N.A.	N.A.
Hammer/Rod Type:	Safety	
Rig:	B53 Mobile	C_E = 1.0

Groundwater Observations		
Date	Depth (ft)	Notes
11/16/11		No water observed.

WINGWALL NO. 3
TOP OF FOOTING
EL=534.0

Depth (ft)	Strata (1)	CLASSIFICATION OF MATERIALS (Description)	Blows/6" (N Value)	Moisture Content %	Gravel %	Sand %	Fines %
		0.0 ft - 6.6 ft					
2.5							
5.0							
		Hole stopped @ 6.6 ft — Top of Bedrock @ 6.6 ft					
7.5							
10.0							
12.5							
15.0							
17.5							

Remarks:
1. Offset 8' north of B-5 to verify depth of refusal on bedrock.
2. Auger without sample to termination depth.
3. Auger refusal at 6.6'.
4.Boring backfilled with cuttings and bituminous cold patch.

Notes:
1. Stratification lines represent approximate boundary between material types. Transition may be gradual.
2. N Values have not been corrected for hammer energy. C_E is the hammer energy correction factor.
3. Water level readings have been made at times and under conditions stated. Fluctuations of groundwater may occur due to other factors than those present at the time measurements were made.

BORING LOG 23275_BRO144235_BORINGS_CHA STYLE.GPJ VERMONT AOT.GDT 12/6/11

Vanasse Hangen Brustlin, Inc.

PROJECT NAME: BRATTLEBORO
PROJECT NUMBER: BRO 1442(35)

FILE NAME: z10j062borlogs.dgn
PROJECT LEADER: S.E. BURBANK
DESIGNED BY: VTRANS
BORING LOGS (3 OF 3)

PLOT DATE: 10/14/2013
DRAWN BY: E.A. FIALA
CHECKED BY: S.E. BURBANK
SHEET 28 OF 68

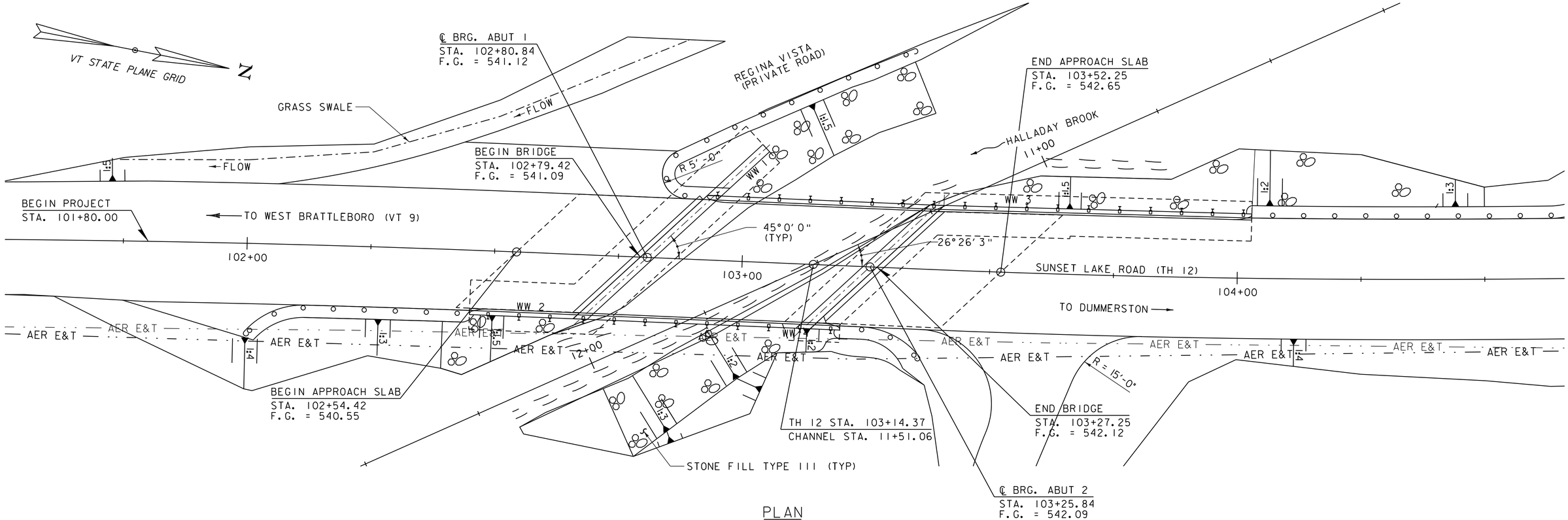

PLAN

SCALE 1" = 10'-0"

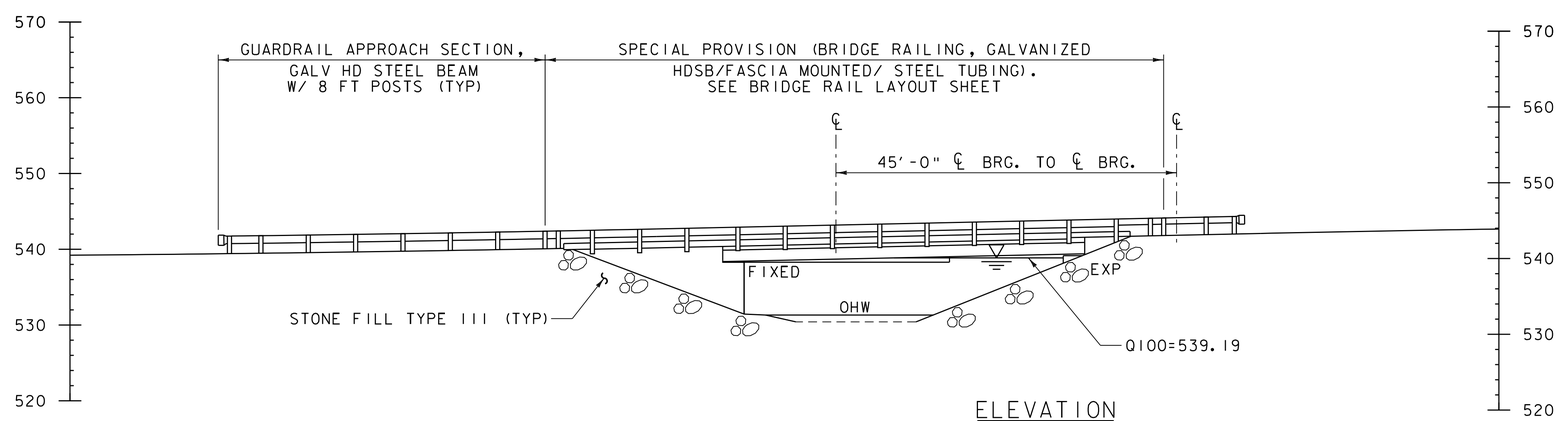

ELEVATION

SCALE 1" = 10'-0"

Vanasse Hangen Brustlin, Inc.

PROJECT NAME: BRATTLEBORO	
PROJECT NUMBER: BRO 1442(35)	
FILE NAME: z10j062pe.dgn	PLOT DATE: 10/14/2013
PROJECT LEADER: S.E. BURBANK	DRAWN BY: E.A. FIALA
DESIGNED BY: E.A. FIALA	CHECKED BY: S.E. BURBANK
PLAN AND ELEVATION	SHEET 29 OF 68

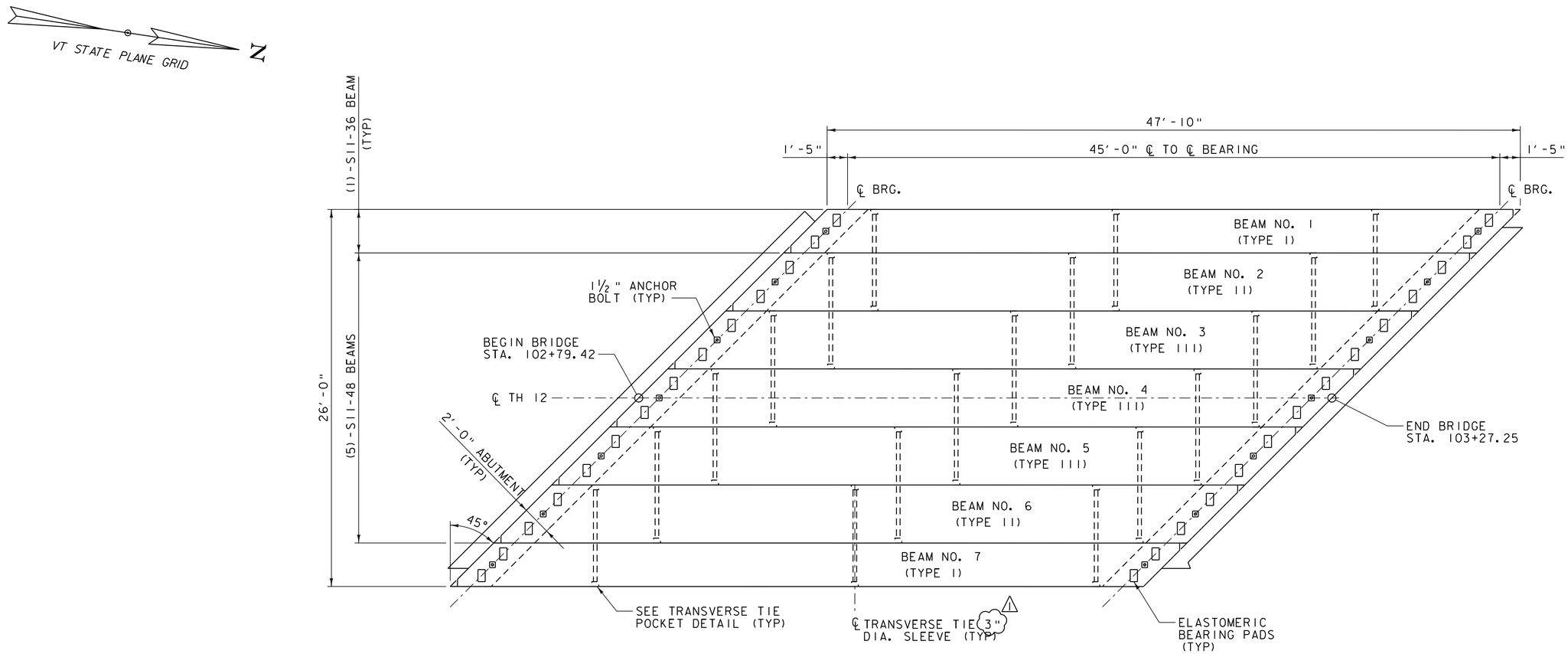

FRAMING PLAN FOR NON-VOIDED SLABS

SCALE ¼" = 1'-0"

REV.	DESCRIPTION	DATE
1	DIA. POST TENSIONING SLEEVE	11/20/2013

PROJECT NAME: BRATTLEBORO
PROJECT NUMBER: BRO 1442(35)

FILE NAME: z10j062sup.dgn
PROJECT LEADER: S.E. BURBANK
DESIGNED BY: E.A. FIALA
FRAMING PLAN

PLOT DATE: 11/20/2013
DRAWN BY: J.L. LEMIEUX
CHECKED BY: S.E. BURBANK
SHEET 30 OF 68

VHB Vanasse Hangen Brustlin, Inc.

VHB 57428

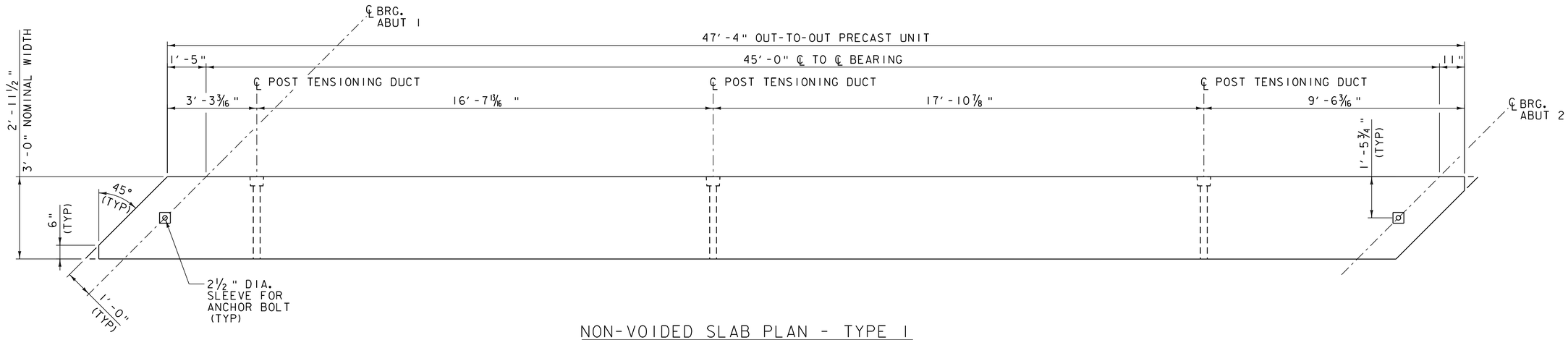

NON-VOIDED SLAB PLAN - TYPE I

BEAM NO. 1 (BEAM NO. 7 SAME BY 180° ROTATION)
SCALE 1/2" = 1'-0"

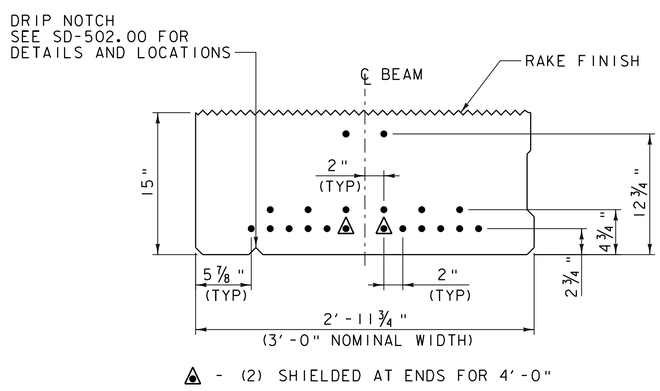

PRESTRESSED S11-36 BEAM
TYPICAL SECTION - STRAND LAYOUT

SCALE 1 1/2" = 1'-0"

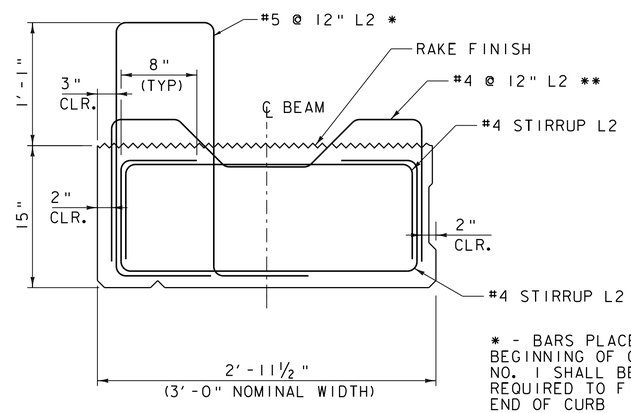

* - BARS PLACED AT BEGINNING OF CURB ON BEAM NO. 1 SHALL BE TURNED AS REQUIRED TO FIT FLARED END OF CURB

PRESTRESSED S11-36 BEAM
TYPICAL SECTION - REINFORCING

SCALE 1 1/2" = 1'-0"

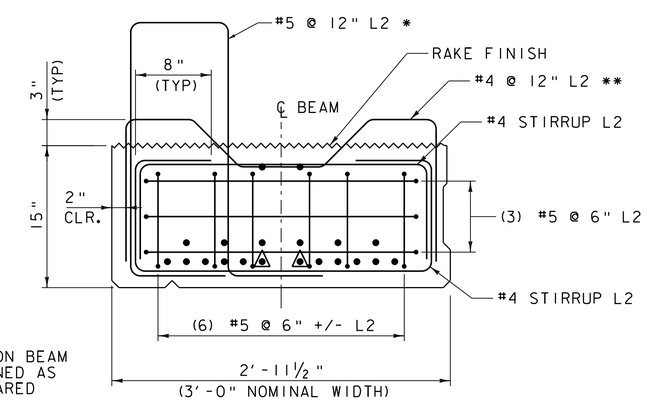

PRESTRESSED S11-36 BEAM
TYPICAL SECTION - END REINFORCEMENT

SCALE 1 1/2" = 1'-0"

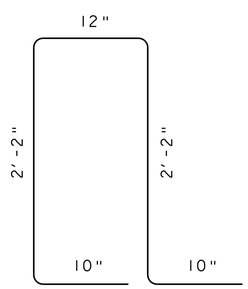

CURB BAR

SCALE 1 1/2" = 1'-0"

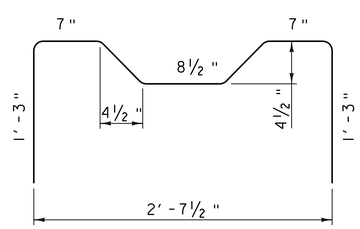

"M" BAR **

SCALE 1 1/2" = 1'-0"

** - FIRST "M" - BAR SHALL BE PARALLEL WITH END OF S11-36 BEAM, 2ND SHALL BE FLARED AND THIRD SHALL BE PERPENDICULAR WITH THE SIDES OF THE S11-36 BEAM. FIRST "M" - BAR SHALL BE LOCATED SO AS TO BE 3" CLEAR FROM THE ASPHALTIC PLUG JOINT. CONTRACTOR SHALL COORDINATE BETWEEN ASPHALTIC PLUG MANUFACTURER, INSTALLER AND NON-VOIDED SLAB FABRICATOR TO LOCATE "M" - BAR PROPERLY.

NOTES:

1. REINFORCING STEEL SHALL MEET THE REQUIREMENTS OF SECTION 507, LEVEL II.
2. SEE NEXT SHEET FOR END OF BEAM REINFORCING AND STIRRUP SPACING.

Vanasse Hangen Brustlin, Inc.

PROJECT NAME: BRATTLEBORO	
PROJECT NUMBER: BRO 1442(35)	
FILE NAME: z10j062sup01.dgn	PLOT DATE: 10/14/2013
PROJECT LEADER: S.E. BURBANK	DRAWN BY: E.A. FIALA
DESIGNED BY: B.M. KLINEFELTER	CHECKED BY: S.E. BURBANK
NON-VOIDED SLAB DETAILS TYPE I (1 OF 2)	SHEET 31 OF 68

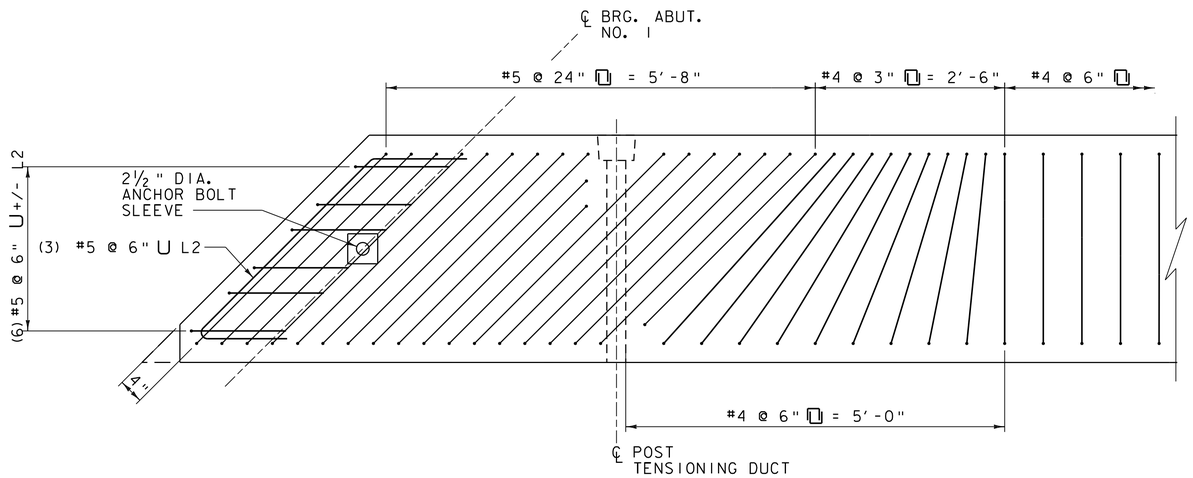

SOUTH END OF BEAM NO. 1 - REINFORCING
PLAN TYPE 1 NON-VOIDED SLAB

(NORTH END OF BEAM NO. 7 SAME BY 180° ROTATION)
SCALE 1" = 1'-0"

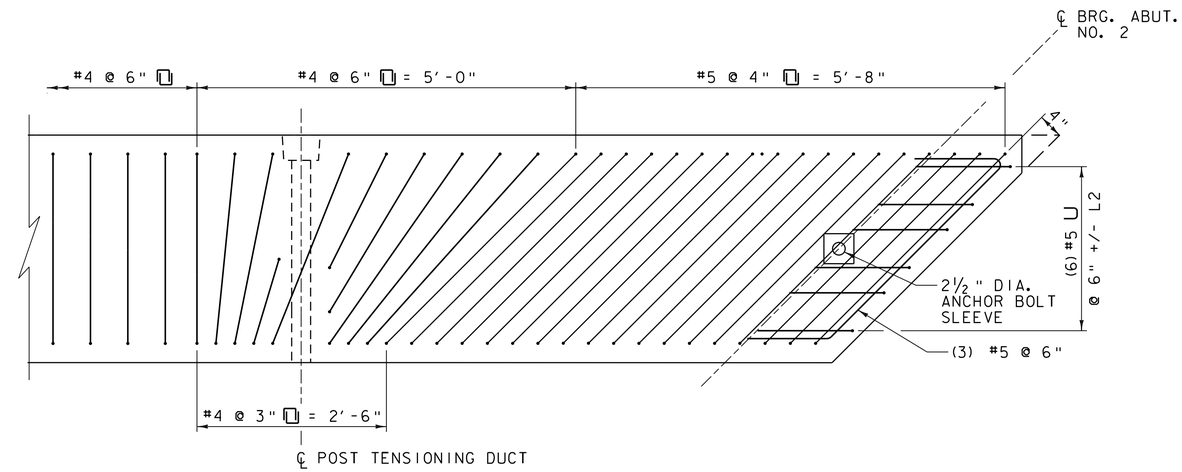

NORTH END OF BEAM NO. 1 - REINFORCING
PLAN TYPE 1 NON-VOIDED SLAB

(SOUTH END OF BEAM NO. 7 SAME BY 180° ROTATION)
SCALE 1" = 1'-0"

NOTES:

1. REINFORCING STEEL SHALL MEET WITH THE REQUIREMENTS OF SECTION 507, LEVEL 11.

Vanasse Hangen Brustlin, Inc.

PROJECT NAME: BRATTLEBORO	
PROJECT NUMBER: BRO 1442(35)	
FILE NAME: z10j062sup01.dgn	PLOT DATE: 10/14/2013
PROJECT LEADER: S.E. BURBANK	DRAWN BY: E.A. FIALA
DESIGNED BY: B.M. KLINEFELTER	CHECKED BY: S.E. BURBANK
NON-VOIDED SLAB DETAILS TYPE 1 (2 OF 2)	SHEET 32 OF 68

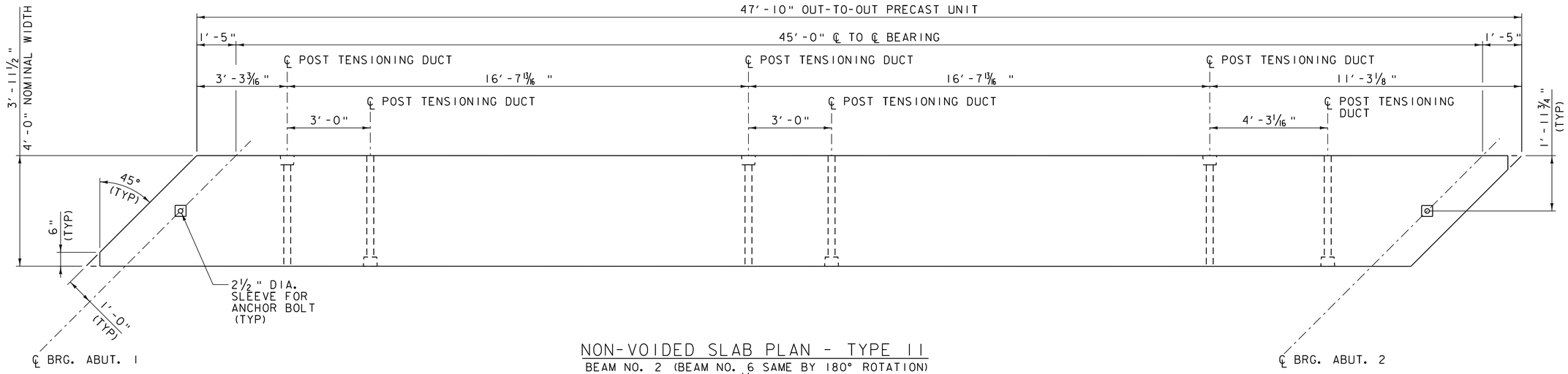

NON-VOIDED SLAB PLAN - TYPE II

BEAM NO. 2 (BEAM NO. 6 SAME BY 180° ROTATION)
SCALE ½" = 1'-0"

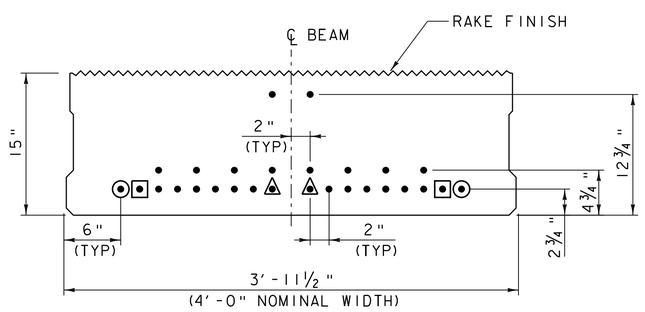

△ - (2) SHIELDED AT ENDS FOR 10'-0"

▣ - (2) SHIELDED AT ENDS FOR 12'-0"

⊙ - (2) SHIELDED AT ENDS FOR 14'-0"

PRESTRESSED SII-48 BEAM
TYPICAL SECTION - STRAND LAYOUT

SCALE 1½" = 1'-0"

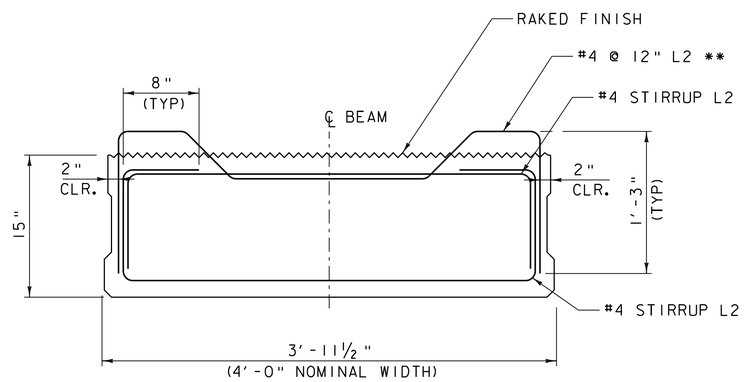

PRESTRESSED SII-48 BEAM
TYPICAL SECTION - REINFORCING

SCALE 1½" = 1'-0"

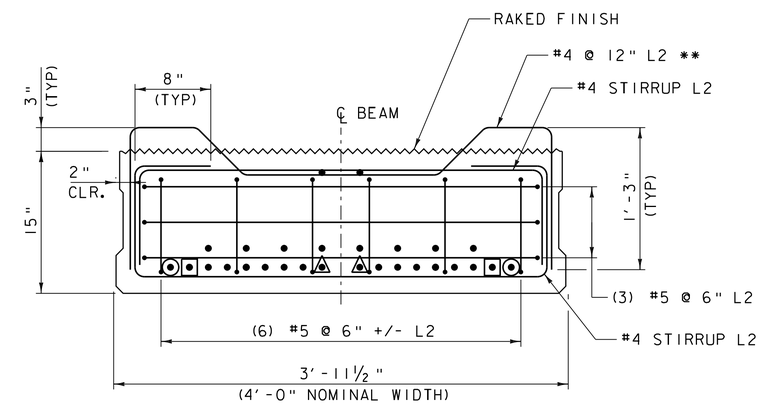

PRESTRESSED SII-48 BEAM
TYPICAL SECTION - END REINFORCING

SCALE 1½" = 1'-0"

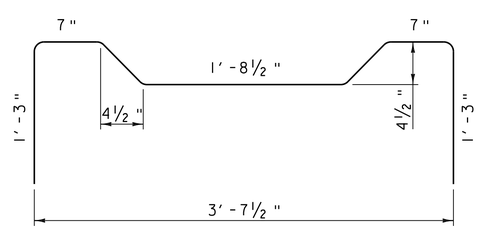

"M" BAR **

SCALE 1½" = 1'-0"

** - FIRST "M" - BAR SHALL BE PARALLEL WITH END OF SII-48 BEAM, 2ND SHALL BE FLARED AND THIRD SHALL BE PERPENDICULAR WITH THE SIDES OF THE SII-48 BEAM. FIRST "M" - BAR SHALL BE LOCATED SO AS TO BE 3" CLEAR FROM THE ASPHALTIC PLUG JOINT. CONTRACTOR SHALL COORDINATE BETWEEN ASPHALTIC PLUG MANUFACTURER, INSTALLER AND NON-VOIDED SLAB FABRICATOR TO LOCATE "M" - BAR PROPERLY.

NOTES:

1. REINFORCING STEEL SHALL MEET THE REQUIREMENTS OF SECTION 507, LEVEL II.
2. SEE NEXT SHEET FOR END OF BEAM REINFORCING AND STIRRUP SPACING.

Vanasse Hangen Brustlin, Inc.

PROJECT NAME: BRATTLEBORO	
PROJECT NUMBER: BRO 1442(35)	
FILE NAME: z10j062sup02.dgn	PLOT DATE: 10/14/2013
PROJECT LEADER: S.E. BURBANK	DRAWN BY: E.A. FIALA
DESIGNED BY: B.M. KLINEFELTER	CHECKED BY: S.E. BURBANK
NON-VOIDED SLAB DETAILS TYPE II (1 OF 2)	SHEET 33 OF 68

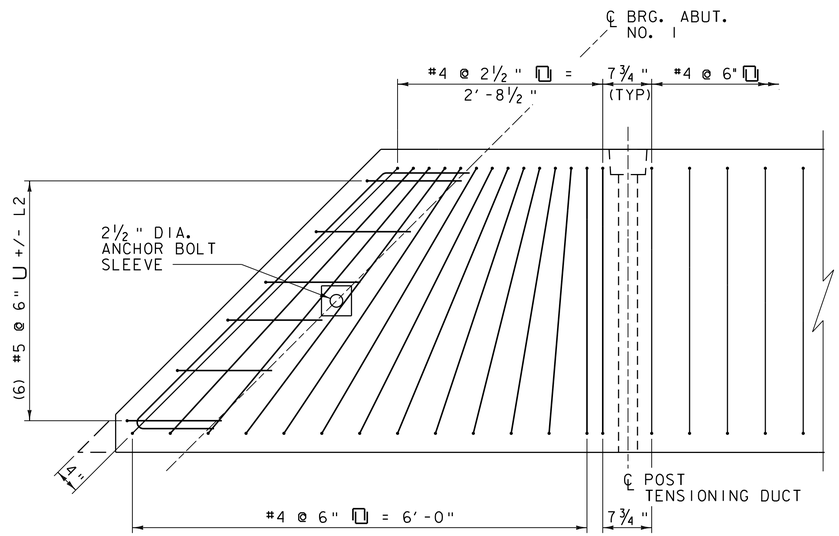

SOUTH END OF BEAM NO. 2 - REINFORCING
PLAN TYPE II NON-VOIDED SLAB
(NORTH END OF BEAM NO. 6 SAME BY 180° ROTATION)
SCALE 1" = 1'-0"

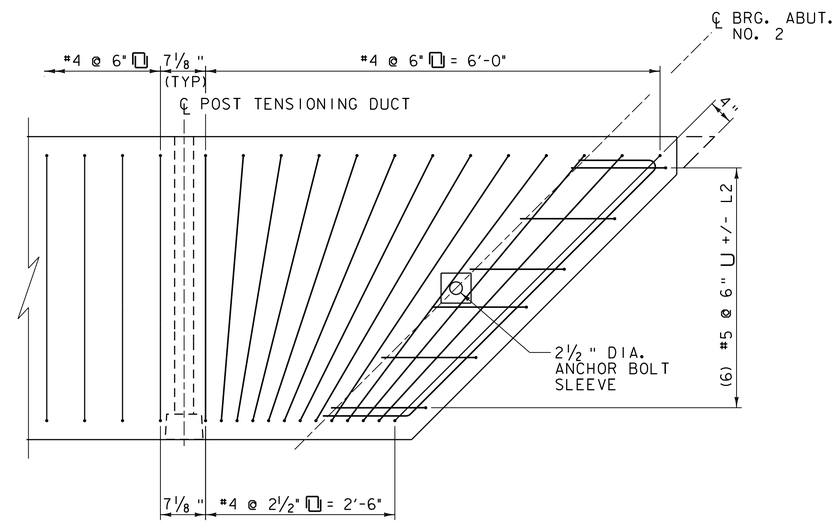

NORTH END OF BEAM NO. 2 - REINFORCING
PLAN TYPE II NON-VOIDED SLAB
(NORTH END OF BEAM NO. 6 SAME BY 180° ROTATION)
SCALE 1" = 1'-0"

NOTES:

1. REINFORCING STEEL SHALL MEET THE REQUIREMENTS OF SECTION 507, LEVEL II.

Vanasse Hangen Brustlin, Inc.

PROJECT NAME: BRATTLEBORO	
PROJECT NUMBER: BRO 1442(35)	
FILE NAME: z10j062sup02.dgn	PLOT DATE: 10/14/2013
PROJECT LEADER: S.E. BURBANK	DRAWN BY: E.A. FIALA
DESIGNED BY: B.M. KLINEFELTER	CHECKED BY: S.E. BURBANK
NON-VOIDED SLAB DETAILS TYPE II (2 OF 2)	SHEET 34 OF 68

VHB 57428

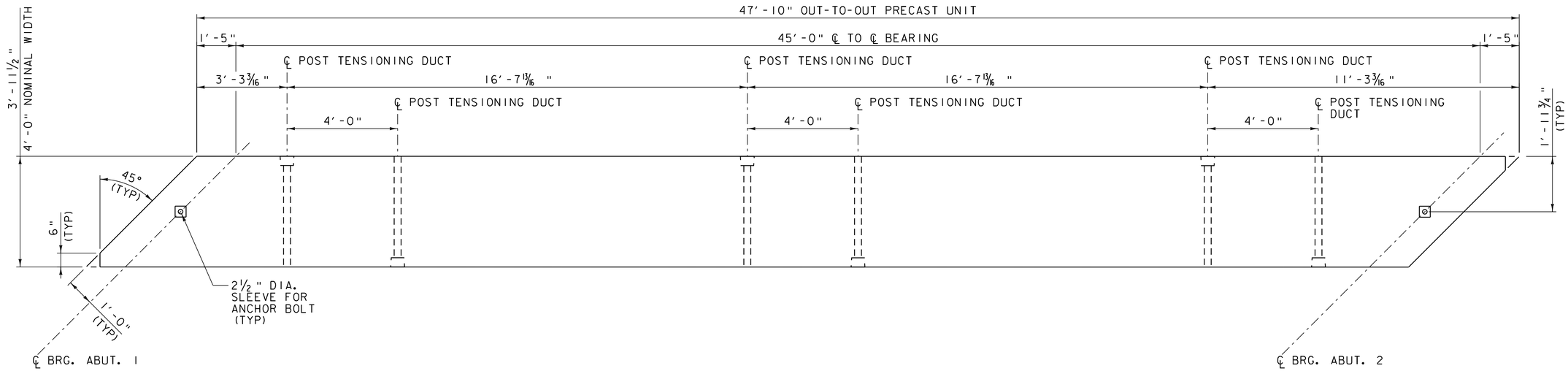

VOIDED SLAB PLAN - TYPE III

BEAM NO. 3, 4 AND 5
SCALE ½" = 1'-0"

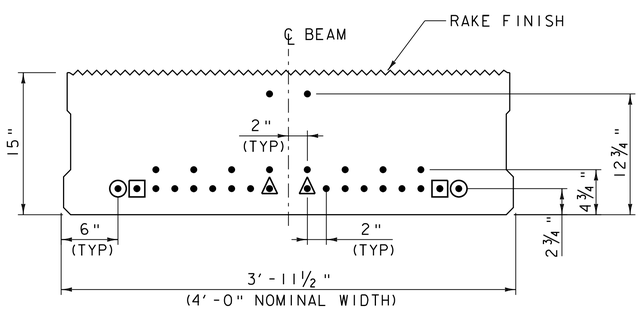

▲ - (2) SHIELDED AT ENDS FOR 10'-0"

▣ - (2) SHIELDED AT ENDS FOR 12'-0"

⊙ - (2) SHIELDED AT ENDS FOR 14'-0"

PRESTRESSED SII-48 BEAM TYPICAL SECTION - STRAND LAYOUT

SCALE 1½" = 1'-0"

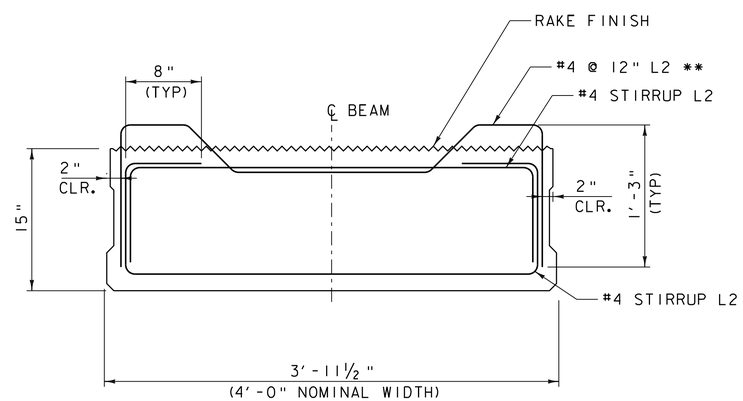

PRESTRESSED SII-48 BEAM TYPICAL SECTION - REINFORCING

SCALE 1½" = 1'-0"

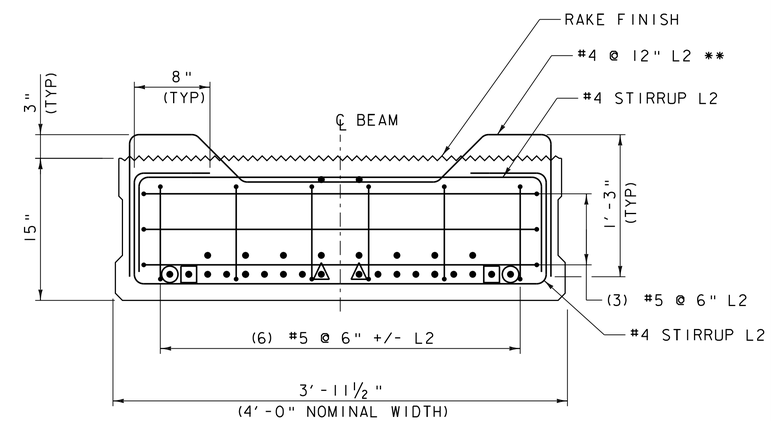

PRESTRESSED SII-48 BEAM TYPICAL SECTION - END REINFORCING

SCALE 1½" = 1'-0"

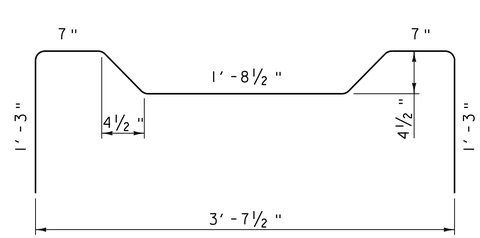

"M" BAR **

SCALE 1½" = 1'-0"

** - FIRST "M" - BAR SHALL BE PARALLEL WITH END OF SII-48 BEAM, 2ND SHALL BE FLARED AND THIRD SHALL BE PERPENDICULAR WITH THE SIDES OF THE SII-48 BEAM. FIRST "M" - BAR SHALL BE LOCATED SO AS TO BE 3" CLEAR FROM THE ASPHALTIC PLUG JOINT. CONTRACTOR SHALL COORDINATE BETWEEN ASPHALTIC PLUG MANUFACTURER, INSTALLER AND NON-VOIDED SLAB FABRICATOR TO LOCATE "M" - BAR PROPERLY.

NOTES:

1. REINFORCING STEEL SHALL MEET THE REQUIREMENTS OF SECTION 507, LEVEL II.
2. SEE NEXT SHEET FOR END OF BEAM REINFORCING AND STIRRUP SPACING.

VHB Vanasse Hangen Brustlin, Inc.

PROJECT NAME: BRATTLEBORO	
PROJECT NUMBER: BRO 1442(35)	
FILE NAME: z10j062sup03.dgn	PLOT DATE: 10/14/2013
PROJECT LEADER: S.E. BURBANK	DRAWN BY: E.A. FIALA
DESIGNED BY: B.M. KLINEFELTER	CHECKED BY: S.E. BURBANK
NON-VOIDED SLAB DETAILS TYPE III (1 OF 2)	SHEET 35 OF 68

VHB 57428

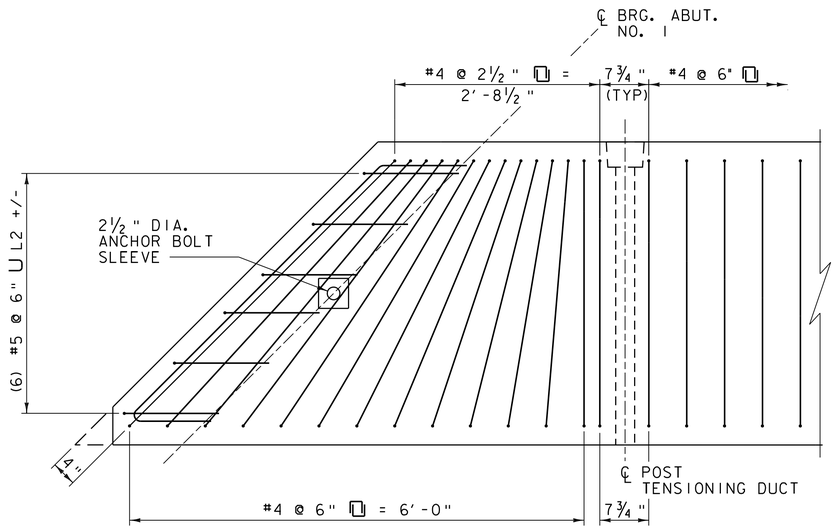

SOUTH END OF BEAM NO. 3, 4, & 5 -
REINFORCING PLAN TYPE III NON-VOIDED SLAB

SCALE 1" = 1'-0"

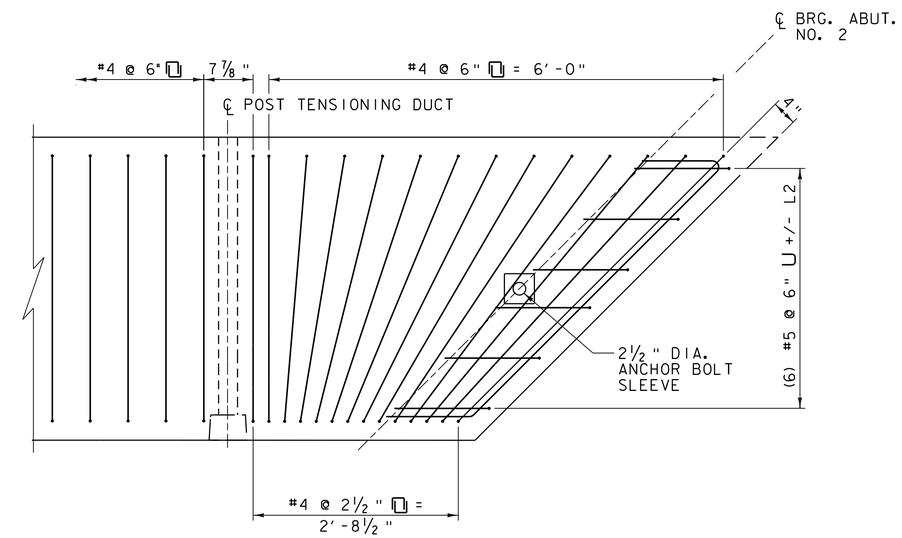

SOUTH END OF BEAM NO. 3, 4, & 5 -
REINFORCING PLAN TYPE III NON-VOIDED SLAB

SCALE 1" = 1'-0"

NOTES:

1. REINFORCING STEEL SHALL MEET THE REQUIREMENTS OF SECTION 507, LEVEL II.

Vanasse Hangen Brustlin, Inc.

PROJECT NAME: BRATTLEBORO	
PROJECT NUMBER: BRO 1442(35)	
FILE NAME: z10j062sup03.dgn	PLOT DATE: 10/14/2013
PROJECT LEADER: S.E. BURBANK	DRAWN BY: E.A. FIALA
DESIGNED BY: B.M. KLINEFELTER	CHECKED BY: S.E. BURBANK
NON-VOIDED SLAB DETAILS TYPE III (2 OF 2)	SHEET 36 OF 68

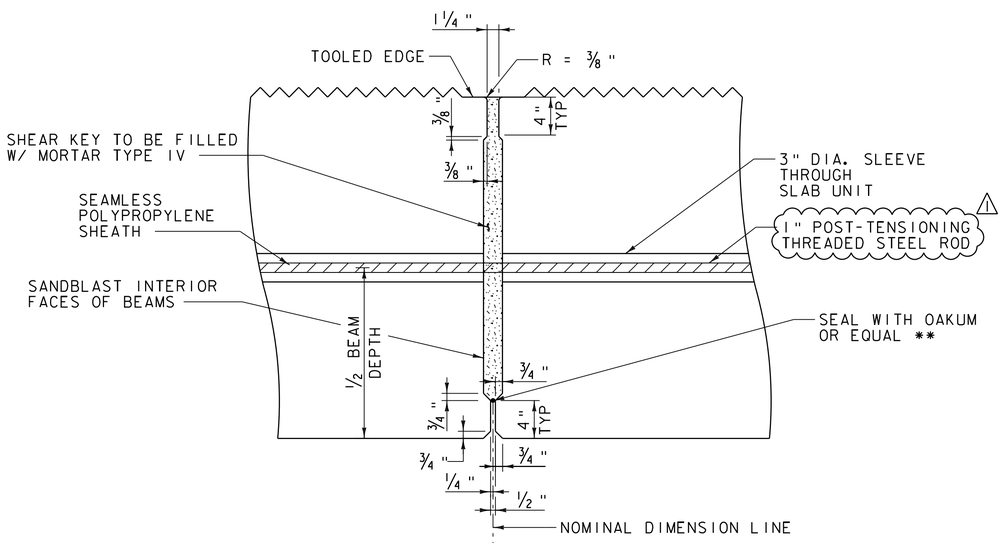

SHEAR KEY DETAIL @ POST-TENSIONING SLEEVE

SCALE 1 1/2 " = 1'-0"

** NOTE: INSTALL OAKUM AFTER UNITS HAVE BEEN PLACED

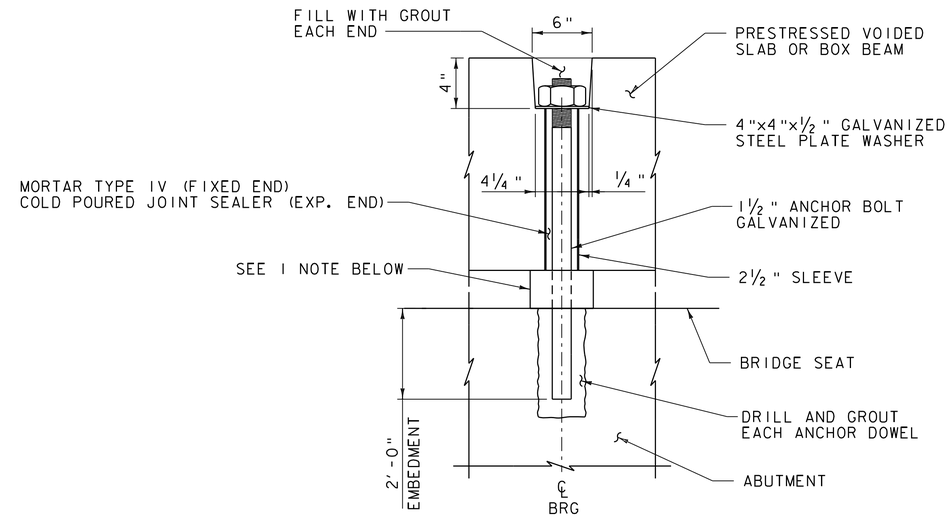

PRESTRESSED BEAM ANCHOR DETAIL

NOT TO SCALE

1. CONTRACTOR SHALL SUPPLY A SELF-ADHESIVE COMPRESSIBLE SEALER BETWEEN THE BOTTOM OF THE UNITS AND THE BRIDGE SEAT. THIS COMPRESSIBLE SEALER SHALL SURROUND THE 2 1/2 " DIA SLEEVE IN THE UNIT. THE PURPOSE OF THE SEALER IS TO FACILITATE PLACEMENT OF THE GROUT AROUND THE ANCHOR BOLTS.
2. GROUT ANCHOR BOLTS INTO THE SLEEVES. BEFORE THE GROUT CURES, PLACE THE WASHER PLATE AND INSTALL THE NUT ON TOP AND TIGHTEN.
3. PAYMENT FOR BEAM ANCHORAGE, INCLUDING ALL MATERIALS, LABOR, AND INCIDENTALS WILL BE INCLUDED IN THE UNIT PRICE BID FOR PRESTRESSED CONCRETE NON-VOIDED SLABS.

1

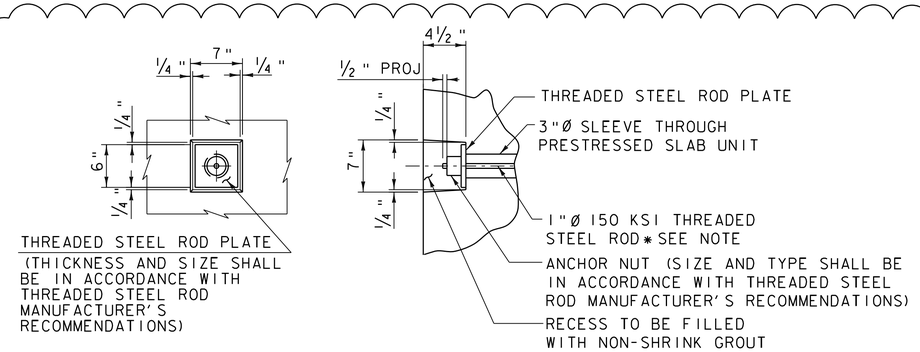

1"Ø THREADED STEEL ROD DETAIL

NOT TO SCALE

* THREADED STEEL RODS SHALL BE COVERED WITH CORROSION INHIBITER GREASE FOR THE LENGTH OF STRAND, EXCEPT AT ANCHORAGE LOCATIONS. TIES SHALL BE TENSIONED TO 47 KIPS.

REV.	DESCRIPTION	DATE
1	THREADED STEEL ROD DETAILS	11/20/2013

PROJECT NAME: BRATTLEBORO
PROJECT NUMBER: BRO 1442(35)

Vanasse Hangen Brustlin, Inc.

FILE NAME: z10j062reinf.dgn
PROJECT LEADER: S.E. BURBANK
DESIGNED BY: B.M. KLINEFELTER
PRESTRESSED BEAM DETAILS

PLOT DATE: 11/20/2013
DRAWN BY: J.L. LEMIEUX
CHECKED BY: S.E. BURBANK
SHEET 37 OF 68

VHB 57428

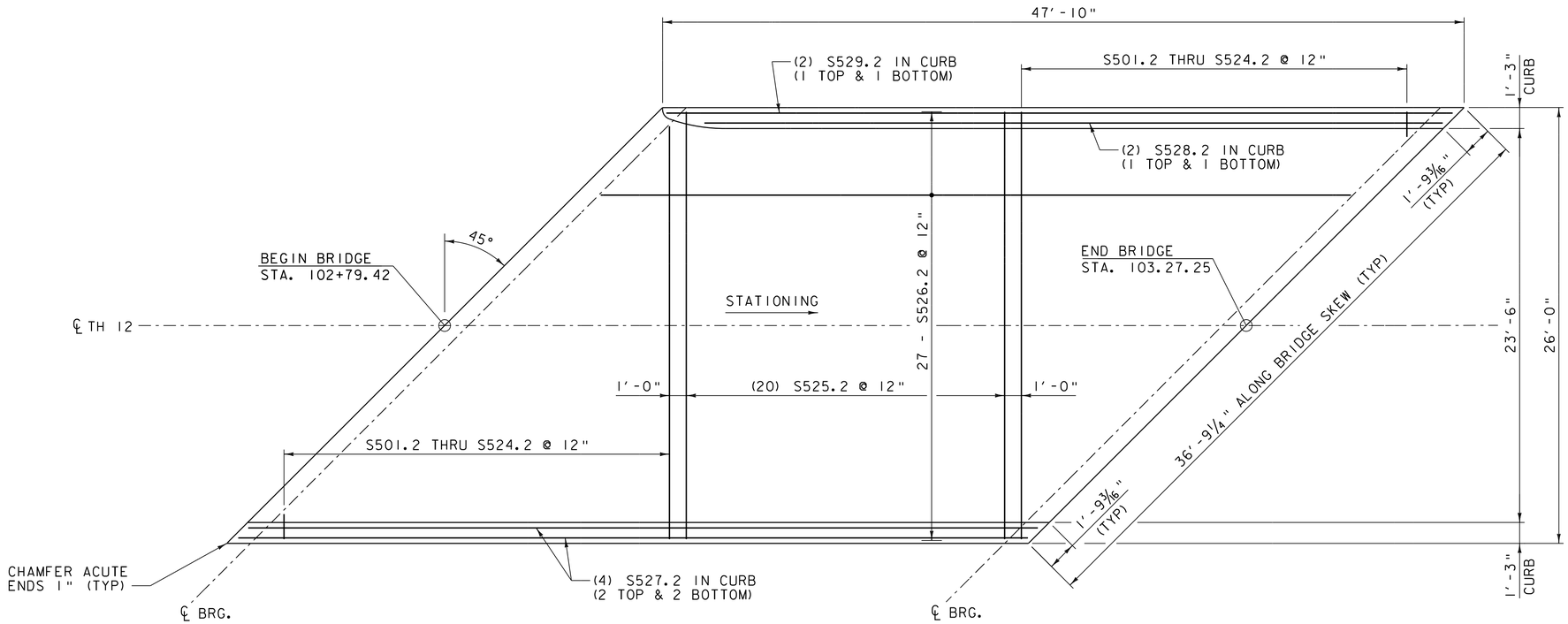

OVERLAY REINFORCING PLAN

SCALE 1/4" = 1'-0"

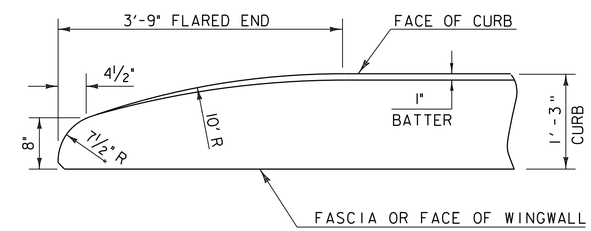

FLARED END DETAIL FOR 1'-3" CURB

CURB REINFORCING STIRRUP BARS SHALL BE TURNED AS REQUIRED TO FIT FLARED ENDS.

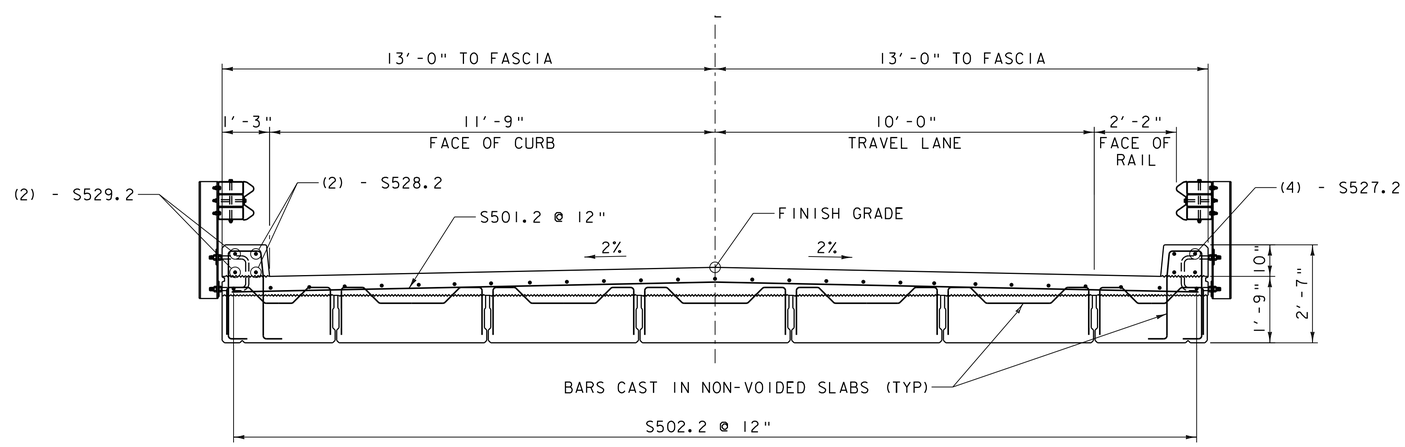

TYPICAL OVERLAY REINFORCEMENT

SCALE 1/2" = 1'-0"

NOTE:

NF = NEAR FACE
FF = FAR FACE
EF = EACH FACE
▲ = CUT TO FIT IN FIELD
3" CLEAR, UNLESS OTHERWISE SPECIFIED ON THE PLANS.
2'-2" BAR LAP UNLESS SPECIFIED ON THE PLANS.

Vanasse Hangen Brustlin, Inc.

PROJECT NAME: BRATTLEBORO	
PROJECT NUMBER: BRO 1442(35)	
FILE NAME: z10j062deck.dgn	PLOT DATE: 10/14/2013
PROJECT LEADER: S.E. BURBANK	DRAWN BY: J.L. LEMIEUX
DESIGNED BY: B.M. KLINEFELTER	CHECKED BY: S.E. BURBANK
OVERLAY REINFORCING DETAILS	SHEET 38 OF 68

VHB 57428

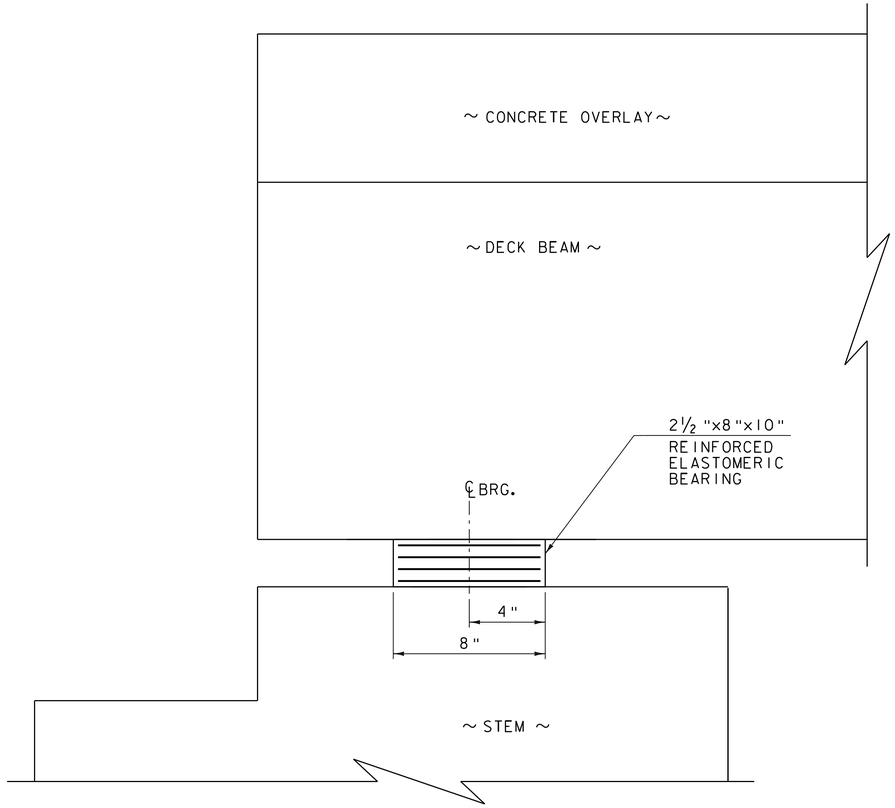

ELASTOMERIC BEARING
SIDE ELEVATION
SCALE 3" = 1'-0"

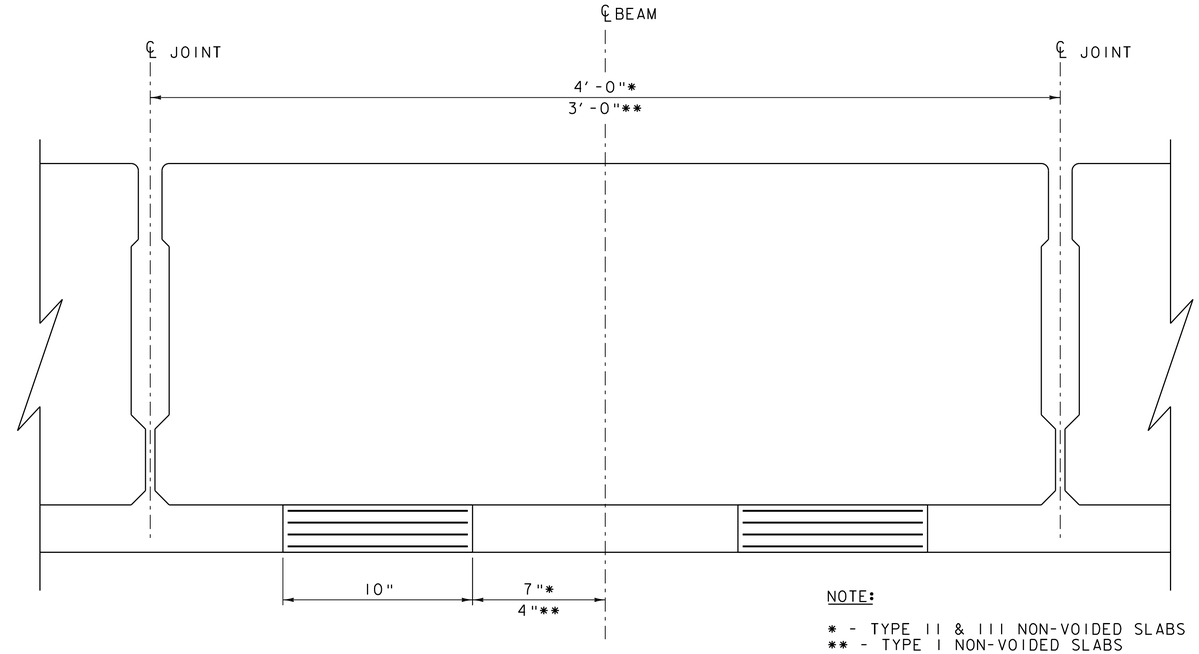

NOTE:

* - TYPE II & III NON-VOIDED SLABS
** - TYPE I NON-VOIDED SLABS

ELASTOMERIC BEARING
FRONT ELEVATION
SCALE 3" = 1'-0"

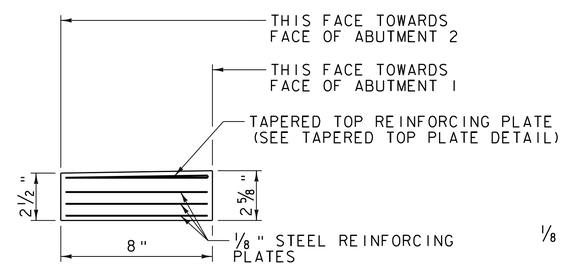

ELASTOMERIC BEARING SIDE VIEW
SCALE 3" = 1'-0"

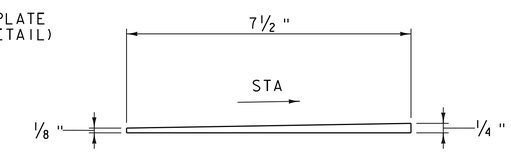

TAPERED TOP PLATE DETAIL
SCALE 6" = 1'-0"

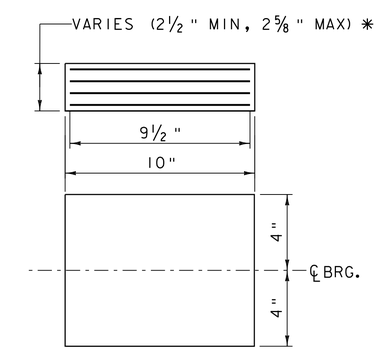

* (2) ¼" EXTERIOR LAYERS OF ELASTOMER
(3) ½" INTERIOR LAYERS OF ELASTOMER
(3) ⅛" STEEL REINFORCING PLATES
(1) TAPERED STEEL REINFORCING TOP PLATE (SEE DETAIL)

ELASTOMERIC BEARING
PLAN VIEW
SCALE 3" = 1'-0"

BEARING NOTES

1. BEARINGS SHALL CONFORM TO THE APPLICABLE SUBSECTIONS OF SECTIONS 531 AND 731.
2. THE BEARINGS, INCLUDING ANCHOR BOLTS, DRILLING AND GROUTING, AND WASHERS AND NUTS SHALL BE PAID FOR UNDER ITEM 531.17 "BEARING DEVICE ASSEMBLY, STEEL REINFORCED ELASTOMER PAD."
3. ALL PLATES, NUTS WASHERS AND ANCHOR BOLTS SHALL BE GALVANIZED OR METALIZED AS PER SUBSECTIONS 726.08 AND 726.09. AREAS OF GALVANIZING OR METALIZING DAMAGED BY FIELD WELDING OR HANDLING SHALL BE REPAIRED IN CONFORMANCE WITH SUBSECTIONS 726.08 AND 726.09.
4. ALL REINFORCEMENT BETWEEN LAYERS OF ELASTOMER SHALL BE STEEL, MEETING THE REQUIREMENTS OF SUBSECTION 714.02. ALL INTERNAL STEEL PLATES SHALL BE SAND BLASTED AND FREE OF COATINGS, RUST AND MILL SCALE. THE PLATES SHALL BE FREE OF SHARP EDGES AND BURRS.
5. ANCHOR BOLTS SHALL BE ASTM F1554, GRADE 55 AND MEET THE REQUIREMENTS OF SUBSECTION 714.08.
6. STEEL REINFORCED ELASTOMERIC BEARINGS SHALL HAVE A MINIMUM ¼" EDGE SEAL OF ELASTOMER INTEGRAL WITH BEARING OVER ALL INTERNAL PLATES.
7. THE ELASTOMER WAS DESIGNED USING METHOD A WITH A SHEAR MODULUS OF 100 PSI.
8. THE ELASTOMER SHALL MEET THE REQUIREMENTS OF LOW TEMPERATURE ZONE D, GRADE 4.
9. THE CONCRETE UNDER THE BEARING DEVICE SHALL BE LEVEL IN THE LONGITUDINAL DIRECTION
10. ALL DESIGNS DONE FOR THE BEARINGS SHALL BE PER THE AASHTO LRFD BRIDGE DESIGN SPECIFICATIONS 6TH EDITION AND ITS LATEST REVISIONS.
11. ALTERNATIVE CONFIGURATIONS FOR BEARINGS MAY BE SUBMITTED FOR APPROVAL. ANY ALTERNATE SUBMITTED SHALL BE DESIGNED AND CERTIFIED TO MEET THE DESIGN LOADS AND CRITERIA SHOWN ON THE PLANS.
12. BRIDGE SEAT ELEVATIONS MAY BE REVISED TO ACCOMMODATE AN ALTERNATIVE CONFIGURATION.
13. DESIGN CRITERIA:
    A.) HORIZONTAL CAPACITY SHALL BE A MINIMUM OF 15% VERTICAL LOAD IN ANY UNRESTRAINED DIRECTION.
    B.) DESIGN LOAD PER BEARING
        DL = 15 KIPS
        LL = 25 KIPS W/O IMPACT

Vanasse Hangen Brustlin, Inc.

PROJECT NAME: BRATTLEBORO	
PROJECT NUMBER: BRO 1442(35)	
FILE NAME: z10j062sup.dgn	PLOT DATE: 10/14/2013
PROJECT LEADER: S.E. BURBANK	DRAWN BY: J.L. LEMIEUX
DESIGNED BY: E.A. FIALA	CHECKED BY: S.E. BURBANK
BEARING DETAILS	SHEET 39 OF 68

VHB 57428

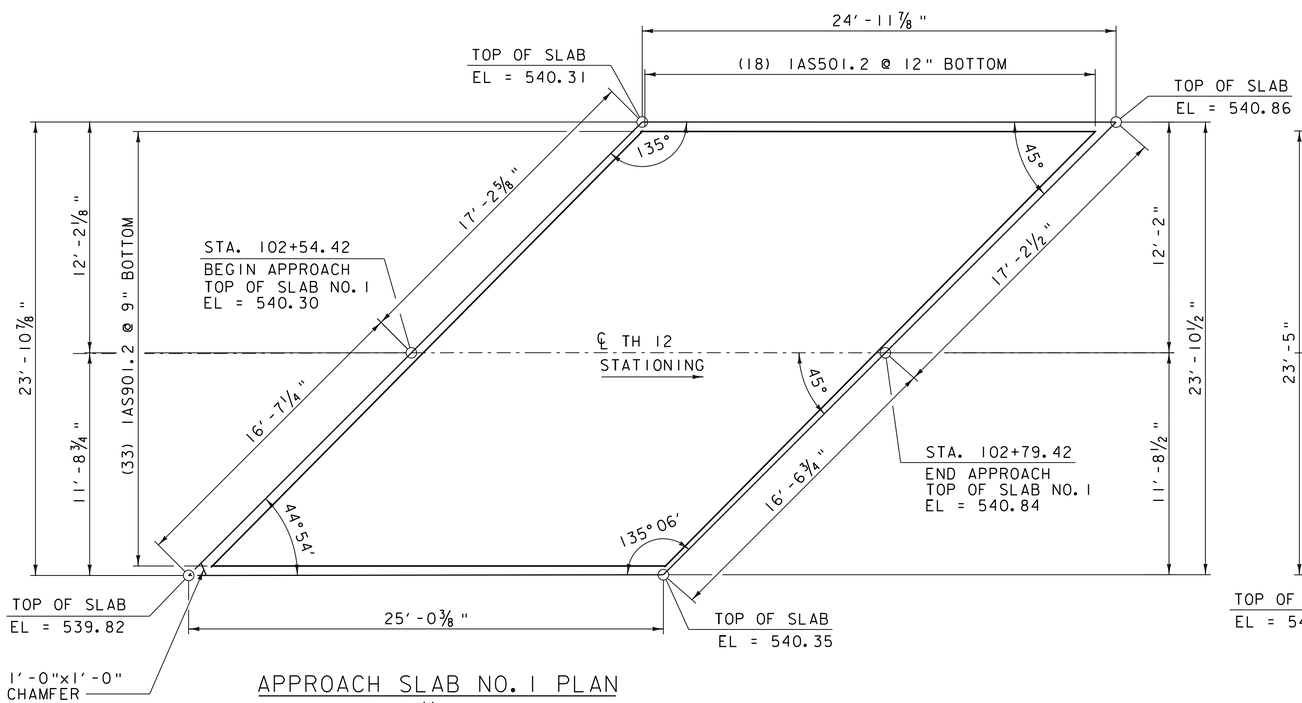

APPROACH SLAB NO. 1 PLAN

SCALE 1/4" = 1'-0"

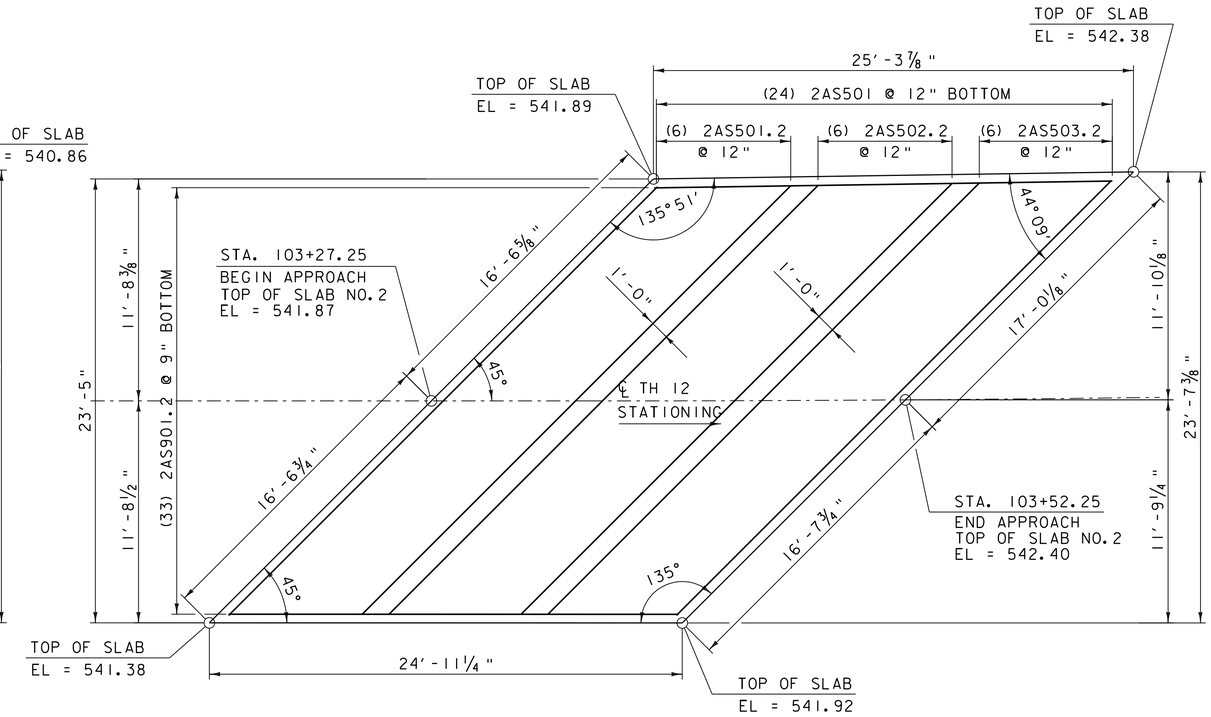

APPROACH SLAB NO. 2 PLAN

SCALE 1/4" = 1'-0"

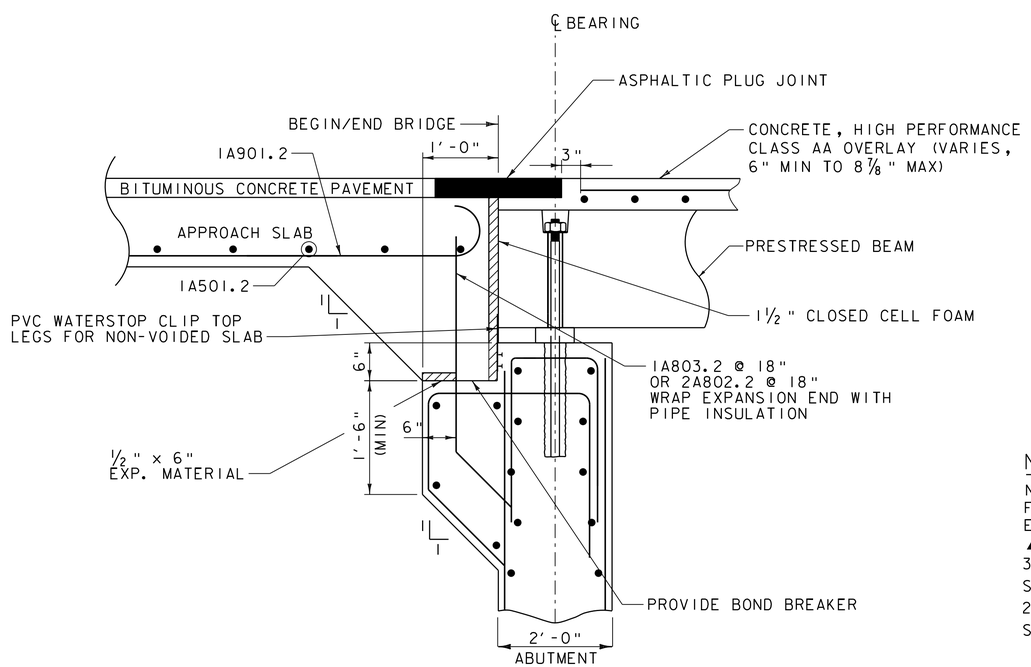

BRIDGE END DETAIL

NOT TO SCALE

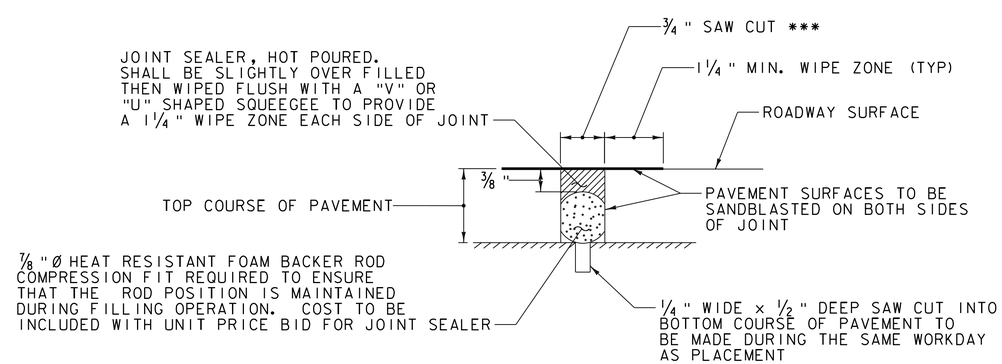

SAW CUT DETAIL

(NOT TO SCALE)

NOTE:

NF = NEAR FACE
FF = FAR FACE
EF = EACH FACE
▲ = CUT TO FIT IN FIELD
3" CLEAR, UNLESS OTHERWISE SPECIFIED ON THE PLANS.
2'-2" BAR LAP UNLESS OTHERWISE SPECIFIED ON THE PLANS.

*** JOINT IS TO BE LOCATED ACCURATELY BY STRING LINING, OR OTHER MEANS, PRIOR TO PAVING, SO THAT THE SAW CUTS WILL BE MADE DIRECTLY OVER THE END OF THE APPROACH SLAB. JOINT SHALL BE CUT DRY IN A SINGLE PASS AND BE SEALED WITHIN 24 HOURS OR PRIOR TO EXPOSURE TO TRAFFIC. JOINT SHALL BE CLEANED PRIOR TO APPLYING THE JOINT SEALER.

VHB Vanasse Hangen Brustlin, Inc.

PROJECT NAME: BRATTLEBORO	
PROJECT NUMBER: BRO 1442(35)	
FILE NAME: z10j062sup04.dgn	PLOT DATE: 10/14/2013
PROJECT LEADER: S.E. BURBANK	DRAWN BY: J.L. LEMIEUX
DESIGNED BY: S.E. BURBANK	CHECKED BY: S.E. BURBANK
APPROACH SLAB DETAILS	SHEET 40 OF 68

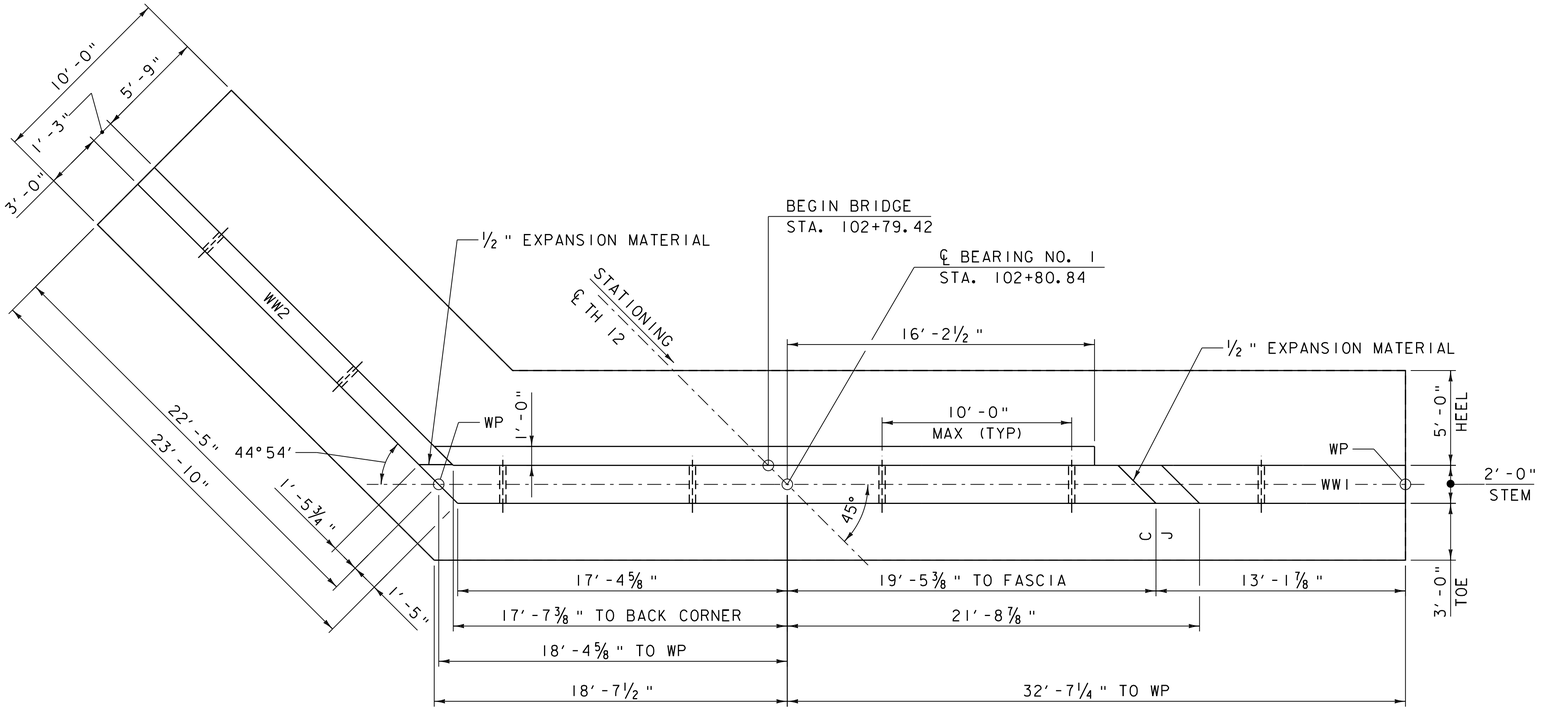

ABUTMENT NO. 1 PLAN VIEW

SCALE ¼" = 1'-0"

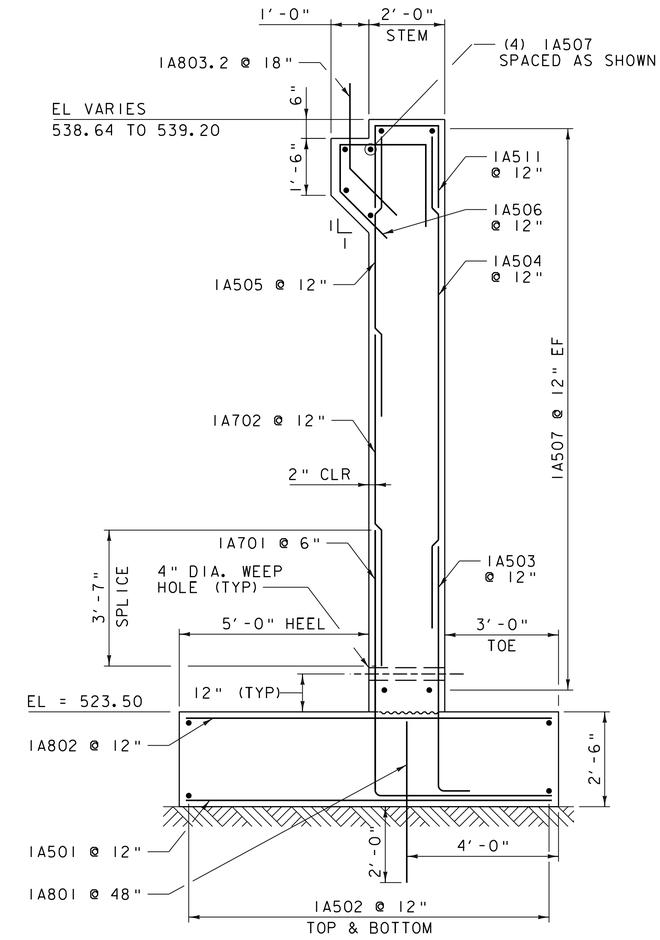

ABUTMENT NO. 1 TYPICAL

SCALE ½" = 1'-0"

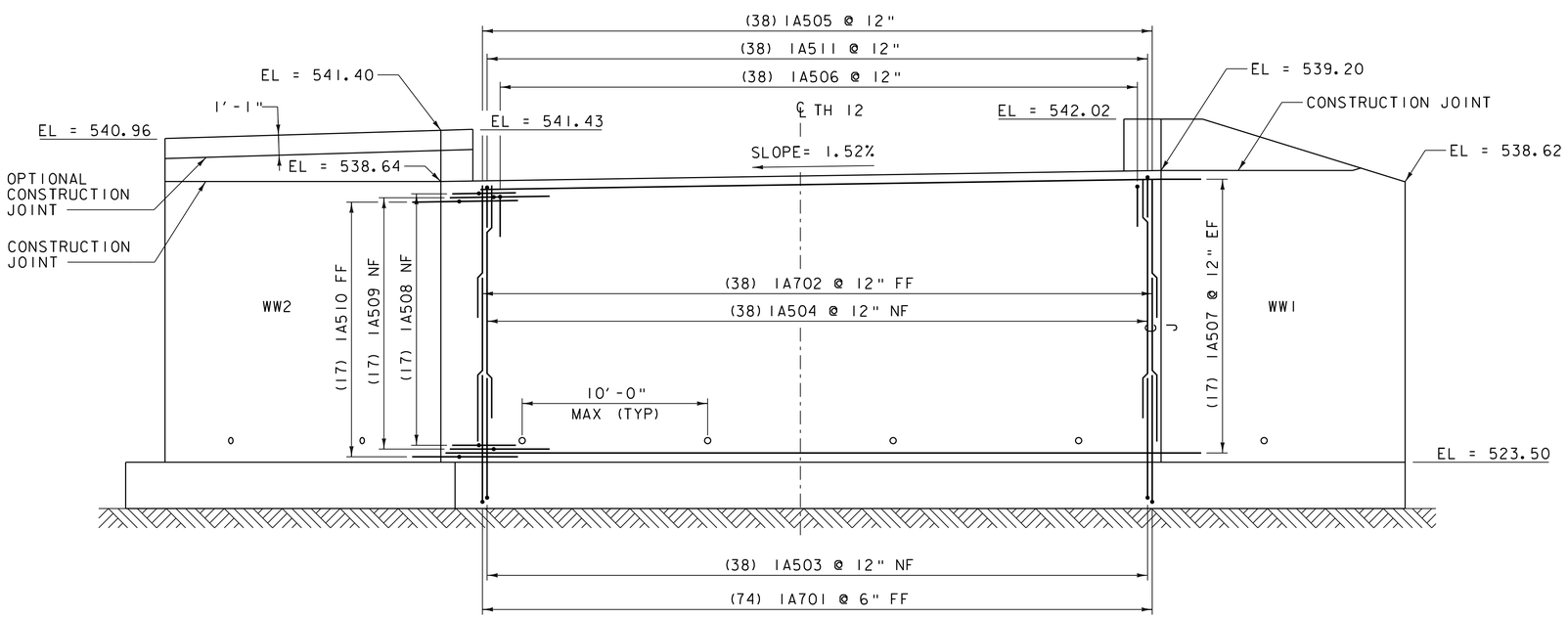

ABUTMENT NO. 1 ELEVATION

SCALE ¼" = 1'-0"

NOTE:

NF = NEAR FACE
FF = FAR FACE
EF = EACH FACE
▲ = CUT TO FIT IN FIELD

3" CLEAR, UNLESS OTHERWISE SPECIFIED ON THE PLANS.

2'-2" BAR LAP UNLESS SPECIFIED ON THE PLANS.

VHB Vanasse Hangen Brustlin, Inc.

PROJECT NAME: BRATTLEBORO	
PROJECT NUMBER: BRO 1442(35)	
FILE NAME: z10j062subl.dgn	PLOT DATE: 10/14/2013
PROJECT LEADER: S.E. BURBANK	DRAWN BY: D.A. GINGRAS
DESIGNED BY: C.J. HAKEY	CHECKED BY: S.E. BURBANK
ABUTMENT NO. 1 PLAN & ELEVATION	SHEET 41 OF 68

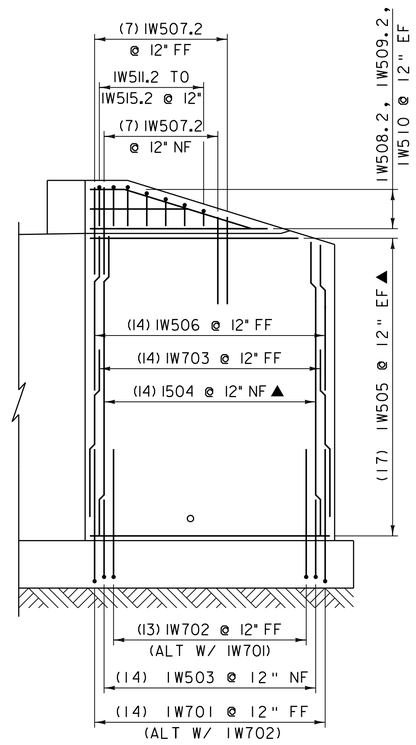

WW1 ELEVATION
SCALE 1/4" = 1'-0"

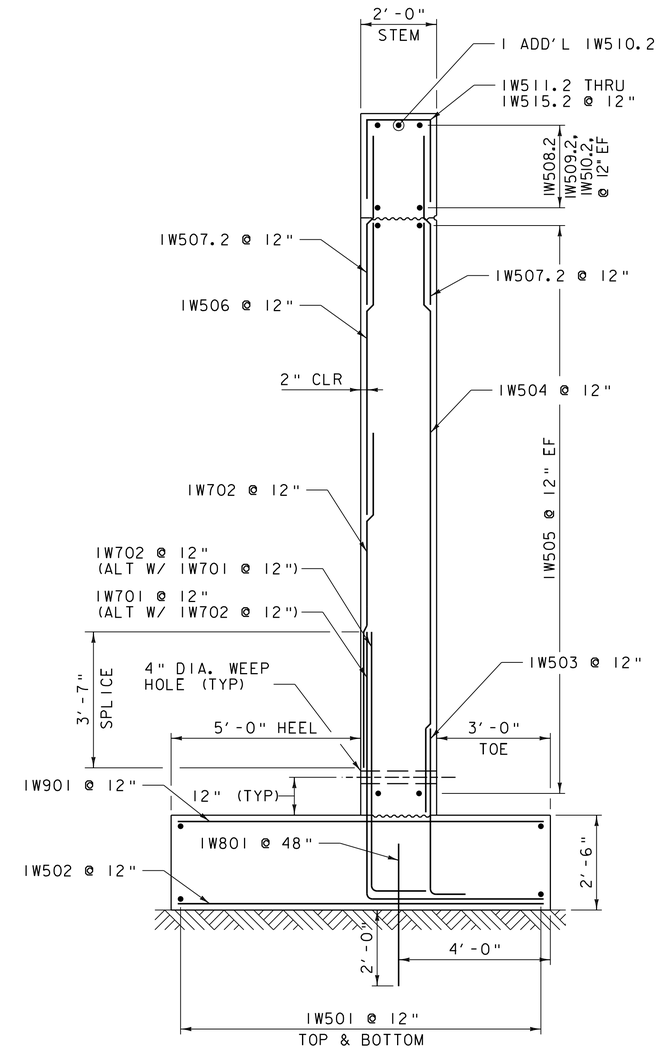

WINGWALL NO. 1 TYPICAL
SCALE 1/2" = 1'-0"

NOTE:

NF = NEAR FACE
FF = FAR FACE
EF = EACH FACE
▲ = CUT TO FIT IN FIELD

3" CLEAR, UNLESS OTHERWISE SPECIFIED ON THE PLANS.

2'-2" BAR LAP UNLESS SPECIFIED ON THE PLANS.

Vanasse Hangen Brustlin, Inc.

PROJECT NAME: BRATTLEBORO	
PROJECT NUMBER: BRO 1442(35)	
FILE NAME: z10j062subl.dgn	PLOT DATE: 10/14/2013
PROJECT LEADER: S.E. BURBANK	DRAWN BY: E.A. FIALA
DESIGNED BY: C.J. HAKEY	CHECKED BY: S.E. BURBANK
WINGWALL NO. 1 ELEVATION & DETAILS	SHEET 42 OF 68

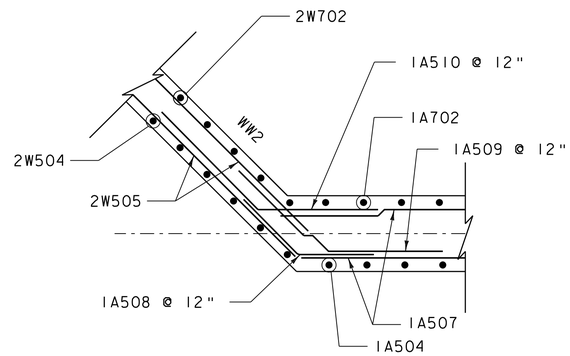

WINGWALL NO. 2 CORNER
DETAIL BELOW SEAT
SCALE ½" = 1'-0"

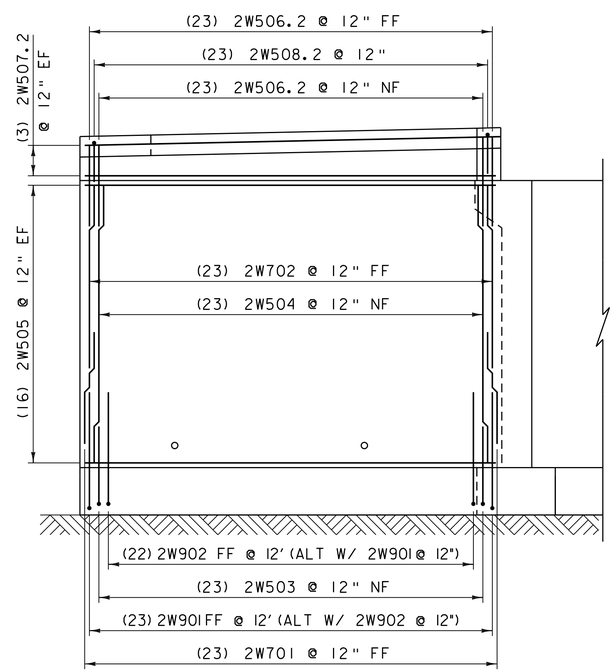

WW2 ELEVATION
SCALE ¼" = 1'-0"

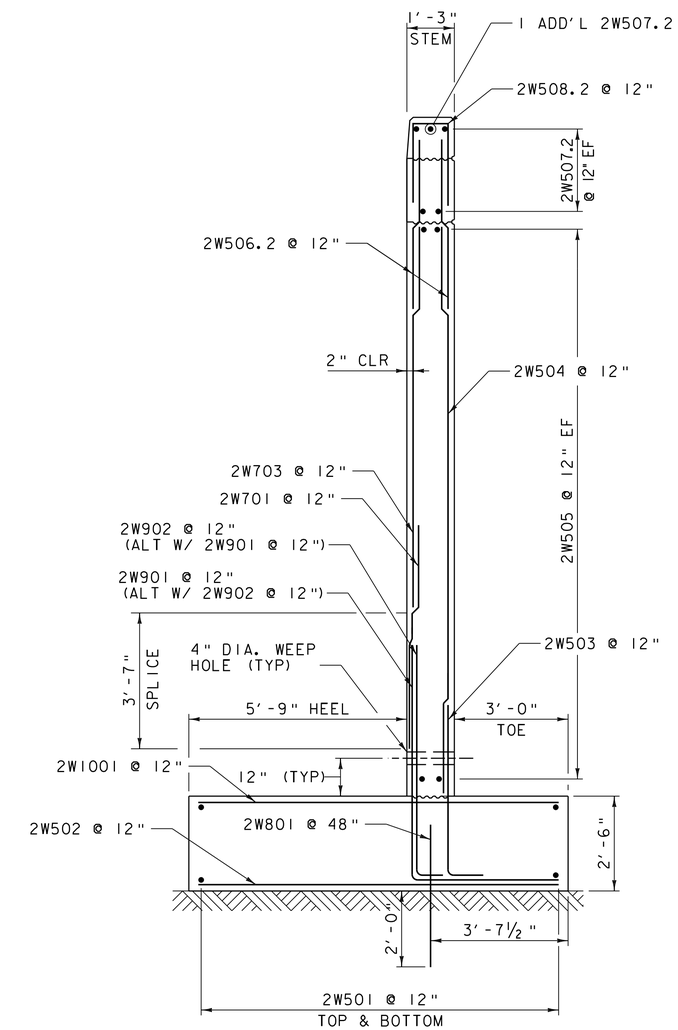

WINGWALL NO. 2 TYPICAL
SCALE ½" = 1'-0"

NOTE:

NF = NEAR FACE
FF = FAR FACE
EF = EACH FACE
▲ = CUT TO FIT IN FIELD

3" CLEAR, UNLESS OTHERWISE SPECIFIED ON THE PLANS.

2'-2" BAR LAP UNLESS SPECIFIED ON THE PLANS.

VHB Vanasse Hangen Brustlin, Inc.

PROJECT NAME: BRATTLEBORO	
PROJECT NUMBER: BRO 1442(35)	
FILE NAME: z10j062sub1.dgn	PLOT DATE: 10/14/2013
PROJECT LEADER: S.E. BURBANK	DRAWN BY: E.A. FIALA
DESIGNED BY: C.J. HAKEY	CHECKED BY: S.E. BURBANK
WINGWALL NO. 2 ELEVATION & DETAILS	SHEET 43 OF 68

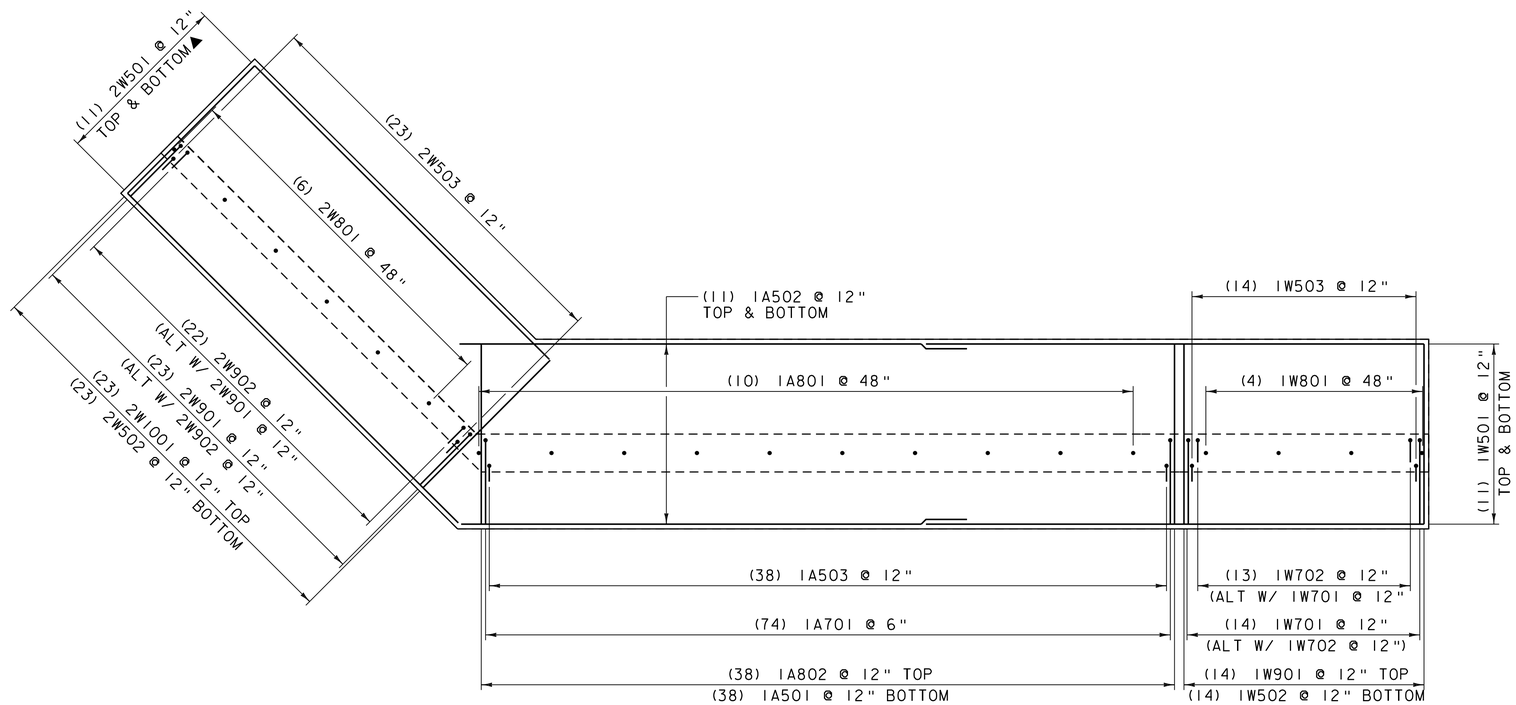

ABUTMENT NO. 1 FOOTING REINFORCING PLAN VIEW

SCALE 1/4" = 1'-0"

NOTE:

NF = NEAR FACE
FF = FAR FACE
EF = EACH FACE
▲ = CUT TO FIT IN FIELD

3" CLEAR, UNLESS OTHERWISE SPECIFIED ON THE PLANS.

2'-2" BAR LAP UNLESS SPECIFIED ON THE PLANS.

Vanasse Hangen Brustlin, Inc.

PROJECT NAME: BRATTLEBORO	
PROJECT NUMBER: BRO 1442(35)	
FILE NAME: z10j062subl.dgn	PLOT DATE: 10/14/2013
PROJECT LEADER: S.E. BURBANK	DRAWN BY: E.A. FIALA
DESIGNED BY: C.J. HAKEY	CHECKED BY: S.E. BURBANK
ABUTMENT NO. 1 FOOTING PLAN	SHEET 44 OF 68

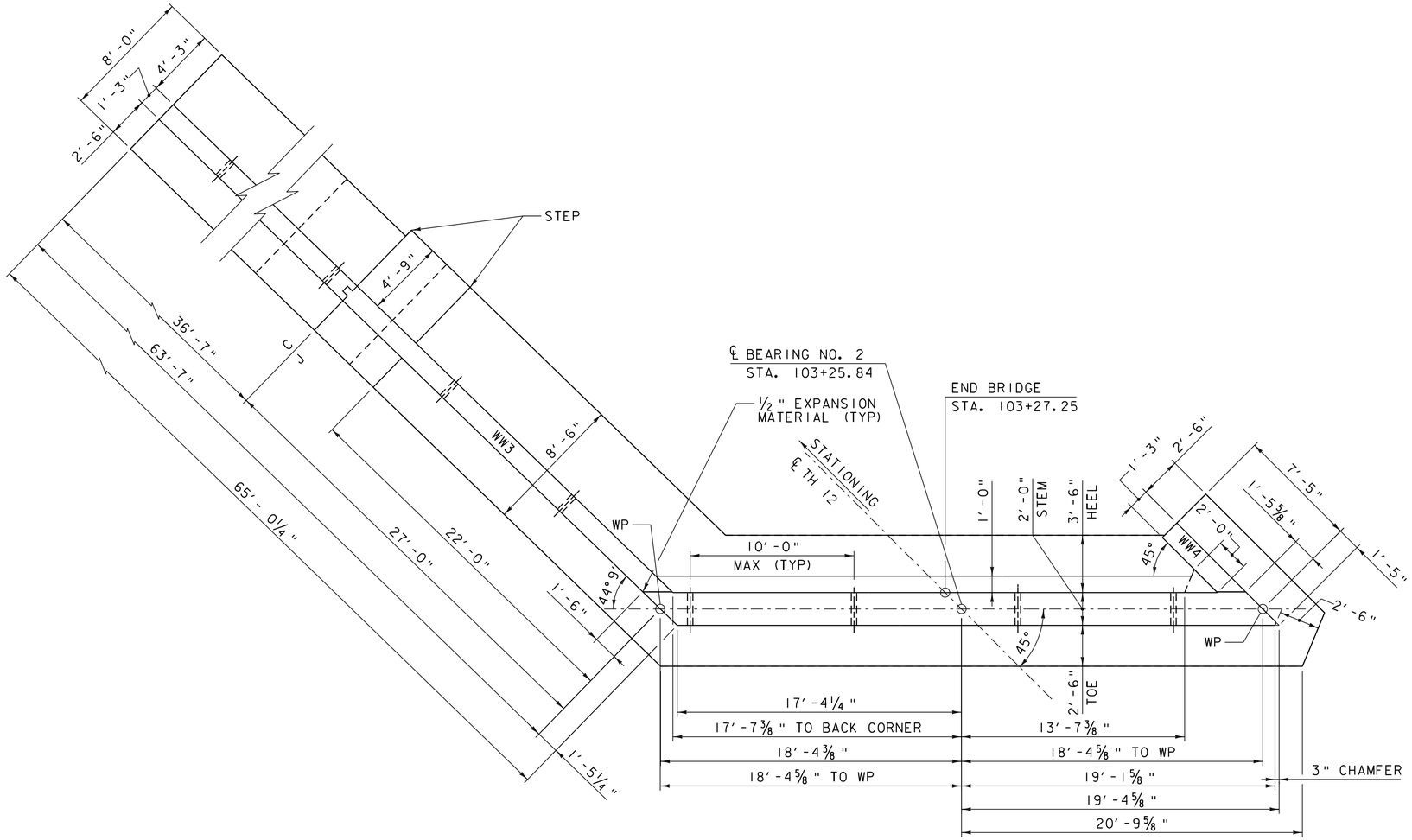

ABUTMENT NO. 2 PLAN VIEW

SCALE ¼" = 1'-0"

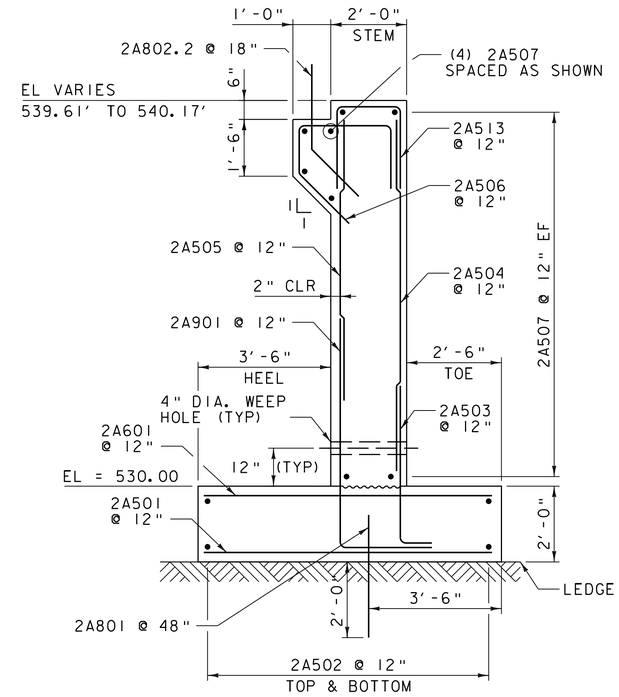

ABUTMENT NO. 2 TYPICAL

SCALE ½" = 1'-0"

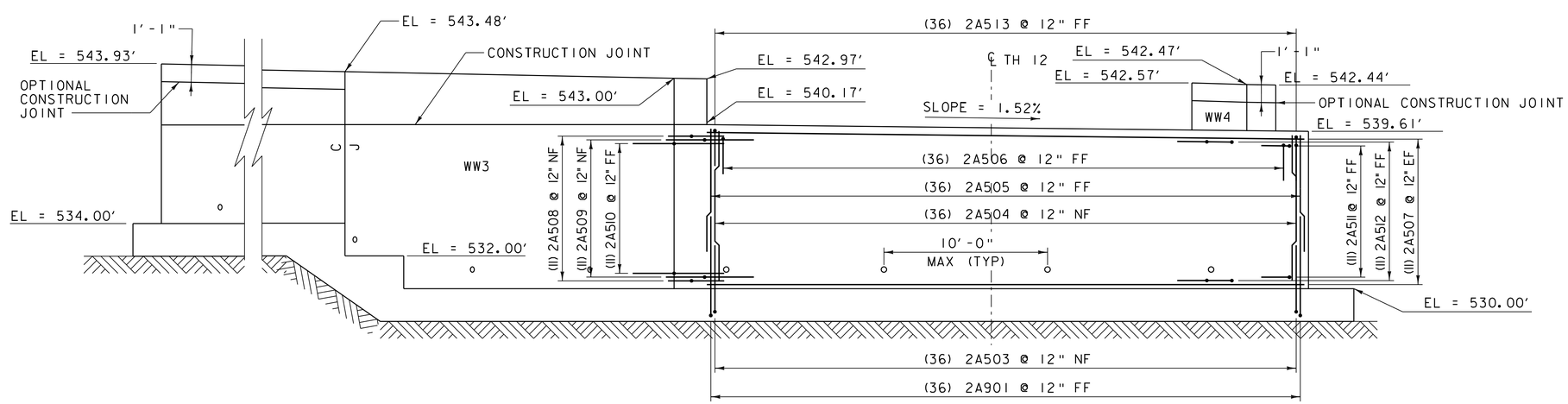

ABUTMENT NO. 2 ELEVATION

SCALE ¼" = 1'-0"

NOTE:

NF = NEAR FACE
FF = FAR FACE
EF = EACH FACE
▲ = CUT TO FIT IN FIELD

3" CLEAR, UNLESS OTHERWISE SPECIFIED ON THE PLANS.

2'-2" BAR LAP UNLESS SPECIFIED ON THE PLANS.

VHB Vanasse Hangen Brustlin, Inc.

PROJECT NAME: BRATTLEBORO	
PROJECT NUMBER: BRO 1442(35)	
FILE NAME: z10j062sub2.dgn	PLOT DATE: 10/14/2013
PROJECT LEADER: S.E. BURBANK	DRAWN BY: E.A. FIALA
DESIGNED BY: C.J. HAKEY	CHECKED BY: S.E. BURBANK
ABUTMENT NO. 2 PLAN & ELEVATION	SHEET 45 OF 68

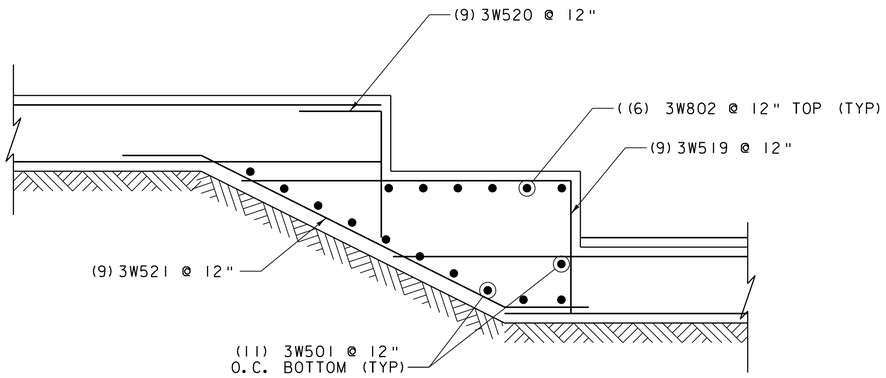

NOTE: FOR INFORMATION NOT SHOWN SEE WW3 ELEVATION AND WINGWALL NO. 3 TYPICAL SECTION B-B.

TYPICAL STEP FOOTING REBAR

SCALE ½" = 1'-0"

NOTE:

NF = NEAR FACE
FF = FAR FACE
EF = EACH FACE
▲ = CUT TO FIT IN FIELD

3" CLEAR, UNLESS OTHERWISE SPECIFIED ON THE PLANS.

2'-2" BAR LAP UNLESS SPECIFIED ON THE PLANS.

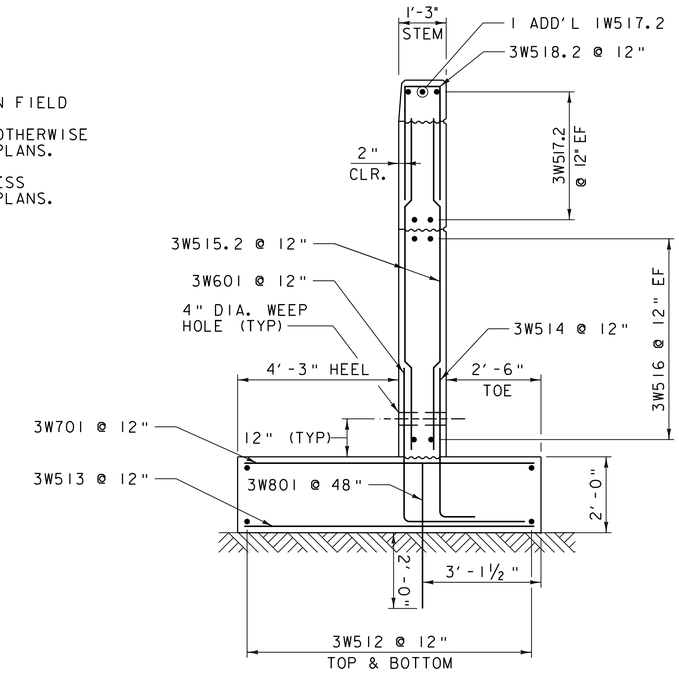

WINGWALL NO. 3 TYPICAL SECTION A-A

SCALE ½" = 1'-0"

SEE WINGWALL NO. 4 ELEVATION AND DETAILS SHEET FOR SECTION B-B.

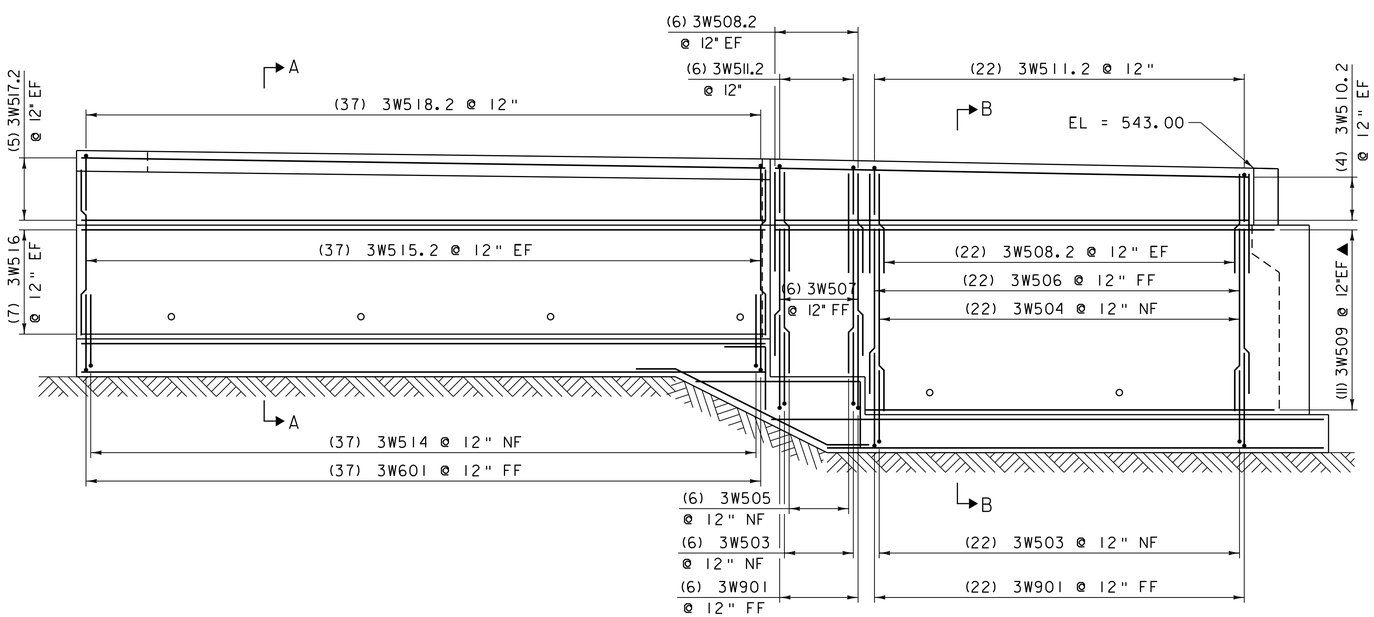

NOTE: SEE TYPICAL STEP FOOTING REBAR AND WINGWALL NO. 3 TYPICAL SECTION A-A AND B-B FOR DETAILS NOT SHOWN.

WW3 ELEVATION

SCALE ¼" = 1'-0"

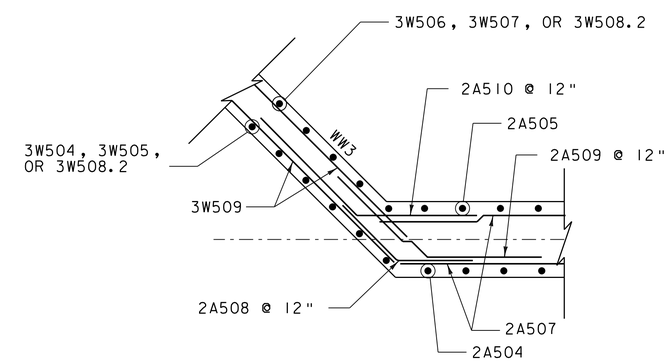

WINGWALL NO. 3 CORNER DETAIL BELOW SEAT

SCALE ½" = 1'-0"

Vanasse Hangen Brustlin, Inc.

PROJECT NAME: BRATTLEBORO	
PROJECT NUMBER: BRO 1442(35)	
FILE NAME: z10j062sub2.dgn	PLOT DATE: 10/14/2013
PROJECT LEADER: S.E. BURBANK	DRAWN BY: E.A. FIALA
DESIGNED BY: C.J. HAKEY	CHECKED BY: S.E. BURBANK
WINGWALL NO. 3 ELEVATION & DETAILS	SHEET 46 OF 68

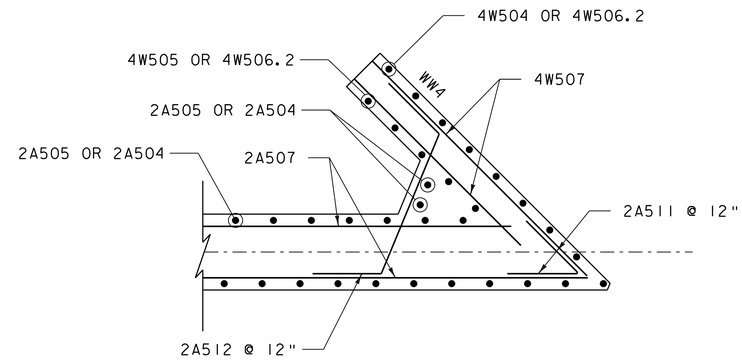

WINGWALL NO. 4 CORNER
DETAIL BELOW SEAT
SCALE ½" = 1'-0"

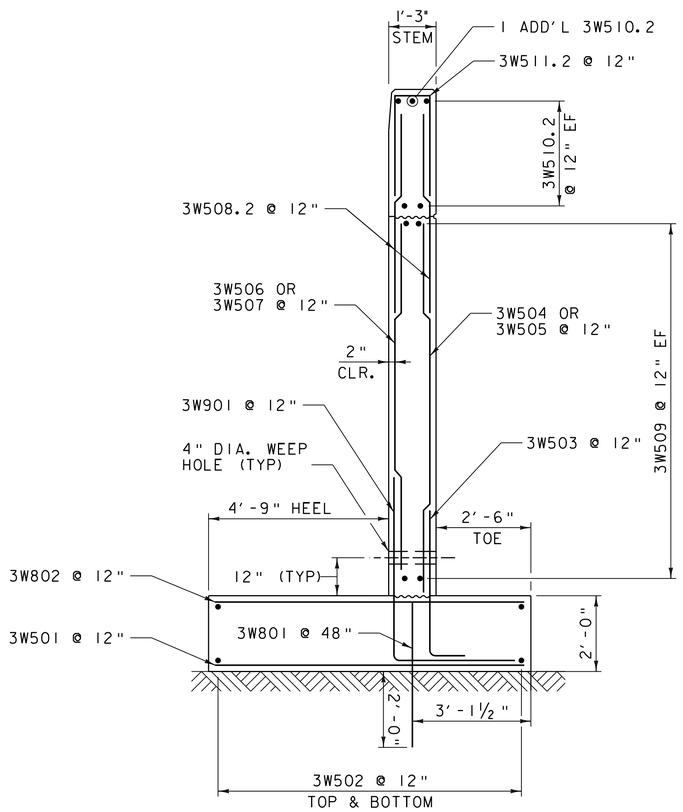

WINGWALL NO. 3
TYPICAL SECTION B-B
SCALE ½" = 1'-0"

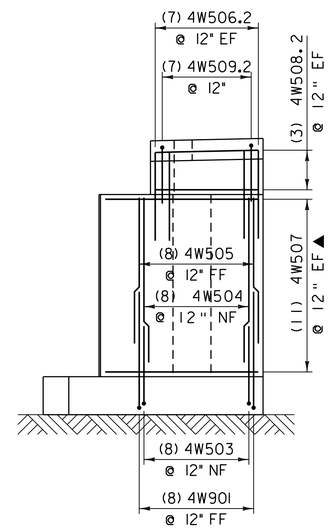

WW4 ELEVATION
SCALE ¼" = 1'-0"

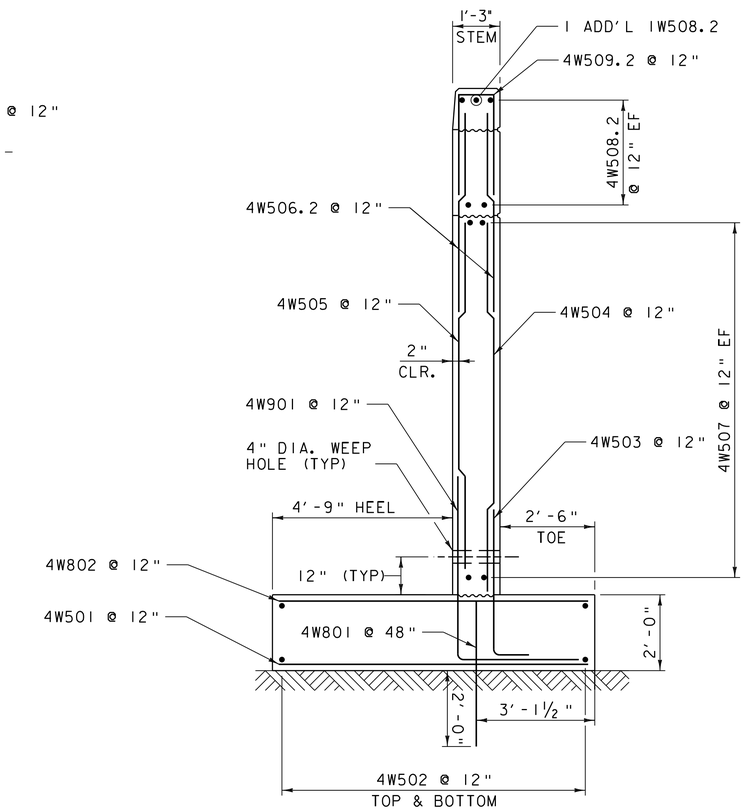

WINGWALL NO. 4 TYPICAL
SCALE ½" = 1'-0"

NOTE:

NF = NEAR FACE
FF = FAR FACE
EF = EACH FACE
▲ = CUT TO FIT IN FIELD

3" CLEAR, UNLESS OTHERWISE SPECIFIED ON THE PLANS.

2'-2" BAR LAP UNLESS SPECIFIED ON THE PLANS.

Vanasse Hangen Brustlin, Inc.

PROJECT NAME: BRATTLEBORO	
PROJECT NUMBER: BRO 1442(35)	
FILE NAME: z10j062sub2.dgn	PLOT DATE: 10/14/2013
PROJECT LEADER: S.E. BURBANK	DRAWN BY: E.A. FIALA
DESIGNED BY: C.J. HAKEY	CHECKED BY: S.E. BURBANK
WINGWALL NO. 4 ELEVATION & DETAILS	SHEET 47 OF 68

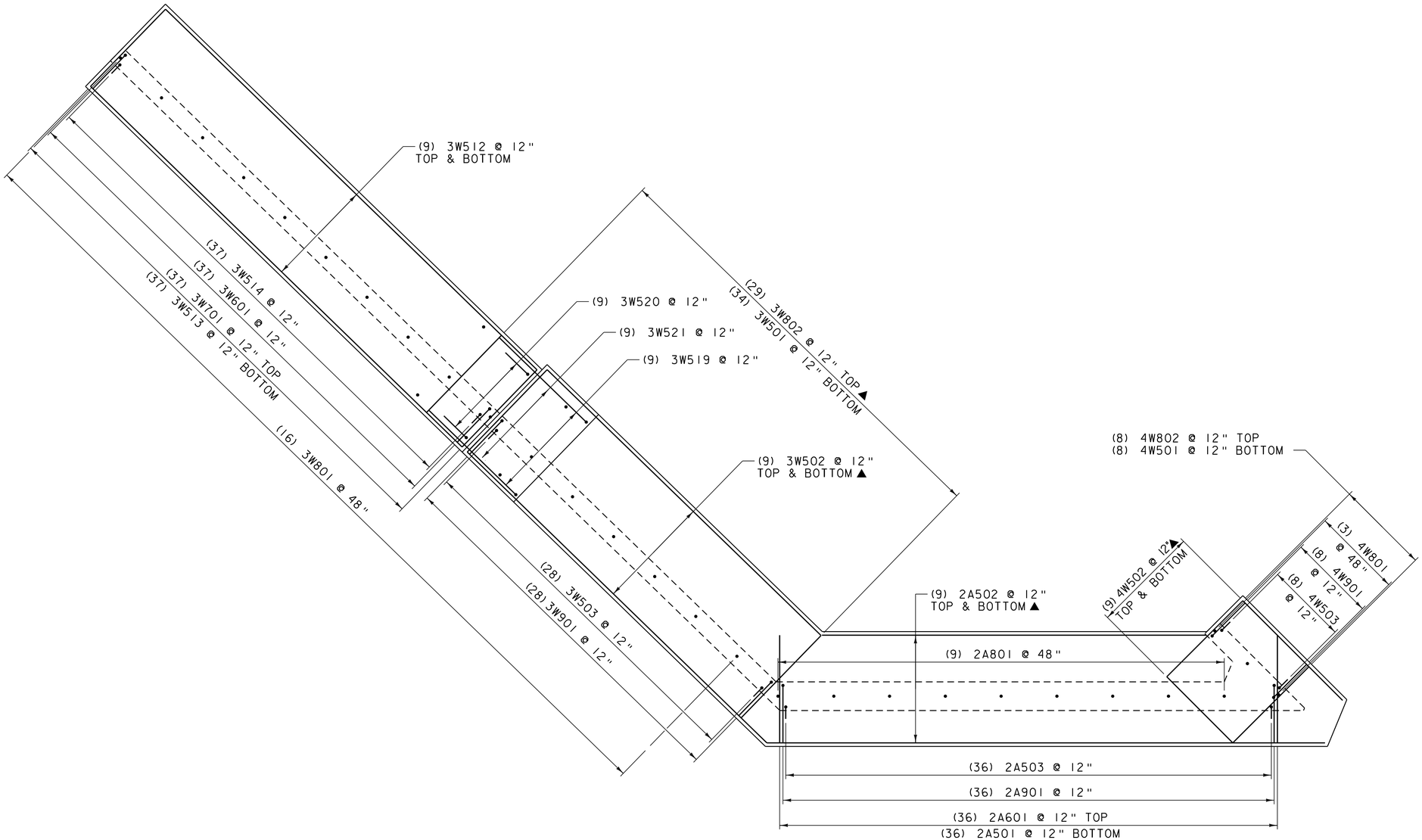

ABUTMENT NO. 2 FOOTING REINFORCING PLAN VIEW

SCALE 1/4" = 1'-0"

NOTE:

NF = NEAR FACE
FF = FAR FACE
EF = EACH FACE
▲ = CUT TO FIT IN FIELD

3" CLEAR, UNLESS OTHERWISE SPECIFIED ON THE PLANS.

2'-2" BAR LAP UNLESS SPECIFIED ON THE PLANS.

Vanasse Hangen Brustlin, Inc.

PROJECT NAME: BRATTLEBORO	
PROJECT NUMBER: BRO 1442(35)	
FILE NAME: z10j062sub2.dgn	PLOT DATE: 10/14/2013
PROJECT LEADER: S.E. BURBANK	DRAWN BY: E.A. FIALA
DESIGNED BY: C.J. HAKEY	CHECKED BY: S.E. BURBANK
ABUTMENT NO. 2 FOOTING PLAN	SHEET 48 OF 68

STATE OF VERMONT
AGENCY OF TRANSPORTATION

REINFORCING STEEL SCHEDULE

ITEM	EACH	SIZE	LENGTH	MARK	TYPE	A	B	C	D	E	F	G	H	J	K	R	O
	OVERLAY & CURB																
	2	5	1'- 6"	S501.2	STR												
	2	5	2'- 6"	S502.2	STR												
	2	5	3'- 6"	S503.2	STR												
	2	5	4'- 6"	S504.2	STR												
✳	3	5	5'- 6"	S505.2	STR												
	2	5	6'- 6"	S506.2	STR												
	2	5	7'- 6"	S507.2	STR												
	2	5	8'- 6"	S508.2	STR												
	2	5	9'- 6"	S509.2	STR												
	2	5	10'- 6"	S510.2	STR												
	2	5	11'- 6"	S511.2	STR												
	2	5	12'- 6"	S512.2	STR												
	2	5	13'- 6"	S513.2	STR												
	2	5	14'- 6"	S514.2	STR												
	2	5	15'- 6"	S515.2	STR												
	2	5	16'- 6"	S516.2	STR												
	2	5	17'- 6"	S517.2	STR												
	2	5	18'- 6"	S518.2	STR												
	2	5	19'- 6"	S519.2	STR												
	2	5	20'- 6"	S520.2	STR												
	2	5	21'- 6"	S521.2	STR												
	2	5	22'- 6"	S522.2	STR												
	2	5	23'- 6"	S523.2	STR												
	2	5	24'- 6"	S524.2	STR												
	20	5	25'- 6"	S525.2	STR												
	27	5	44'- 9"	S526.2	STR												
	4	5	47'- 1"	S527.2	STR												
	2	5	44'- 1"	S528.2	STR												
	2	5	46'- 9"	S529.2	STR												
	ABUTMENT NO. 1																
✳	39	5	9'- 6"	1A501	STR												
	22	5	26'- 8"	1A502	STR												
	38	5	7'- 4"	1A503	17		6'- 6"	0'- 10"	0'- 0"								
	38	5	12'- 10"	1A504	STR												
	38	5	7'- 8"	1A505	STR												
	38	5	7'- 3"	1A506	16	2'- 2"	2'- 6"	1'- 2"	1'- 5"				1'- 0"		1'- 0"		
	38	5	40'- 9"	1A507	STR												
	17	5	4'- 0"	1A508	22		2'- 0"	2'- 0"	0'- 0"				1'- 6"	0'- 0"	1'- 6"	0'- 0"	
	17	5	6'- 4"	1A509	22		3'- 0"	3'- 4"	0'- 0"				2'- 1"	0'- 0"	2'- 1"	0'- 0"	
	17	5	6'- 9"	1A510	22		3'- 7"	3'- 2"	0'- 0"				2'- 9"	0'- 0"	2'- 7"	0'- 0"	
	38	5	5'- 11"	1A510	17		2'- 2"	1'- 7"	2'- 2"								
	74	7	11'- 7"	1A701	17		7'- 0"	4'- 7"	0'- 0"								
✳	39	7	8'- 10"	1A702	STR												
	10	8	4'- 3"	1A801	STR												
✳	39	8	9'- 6"	1A802	STR												
	24	8	4'- 0"	1A803.2	14	2'- 3"	1'- 9"	0'- 0"	0'- 0"	0'- 0"			1'- 3"		1'- 3"		
	WINGWALL NO. 1																
	22	5	26'- 3"	1W501	STR												
	14	5	9'- 6"	1W502	STR												
	14	5	5'- 5"	1W503	17		4'- 5"	1'- 0"	0'- 0"								
▲	14	5	15'- 8"	1W504	STR												
▲	34	5	12'- 8"	1W505	STR												
	14	5	8'- 1"	1W506	STR												
	14	7	11'- 7"	1W701	17		7'- 1"	4'- 6"	0'- 0"								
	13	7	8'- 3"	1W702	17		7'- 1"	1'- 2"	0'- 0"								
✳	15	7	8'- 10"	1W703	STR												
	4	8	4'- 3"	1W801	STR												
✳	15	9	9'- 6"	1W901	STR												
	14	5	4'- 7"	1W507.2	STR												
	2	5	9'- 4"	1W508.2	STR												
	2	5	5'- 2"	1W509.2	STR												
	3	5	8'- 11"	1W510.2	19		0'- 0"	1'- 10"	7'- 1"				2'- 1"	6'- 8"		8'- 6"	
	3	5	5'- 10"	1W511.2	S10		2'- 2"	1'- 6"	2'- 2"								
	1	5	5'- 2"	1W512.2	S10		1'- 10"	1'- 6"	1'- 10"								
	1	5	4'- 8"	1W513.2	S10		1'- 7"	1'- 6"	1'- 7"								
	1	5	4'- 0"	1W514.2	S10		1'- 3"	1'- 6"	1'- 3"								
	1	5	3'- 6"	1W515.2	S10		1'- 0"	1'- 6"	1'- 0"								
	WINGWALL NO. 2																
	22	5	24'- 7"	2W501	STR												
▲	23	5	9'- 6"	2W502	STR												
	23	5	5'- 5"	2W503	17		4'- 6"	0'- 11"	0'- 0"								
	23	5	14'- 7"	2W504	STR												
	32	5	21'- 8"	2W505	STR												
	23	7	5'- 11"	2W701	STR												
	23	7	9'- 8"	2W702	STR												
	23	7	10'- 1"	2W703	STR												

ITEM	EACH	SIZE	LENGTH	MARK	TYPE	A	B	C	D	E	F	G	H	J	K	R	O
	6	8	4'- 3"	1W801	STR												
	23	9	7'- 8"	2W901	17		6'- 6"	1'- 2"	0'- 0"								
	22	9	9'- 9"	2W902	17		6'- 6"	3'- 3"	0'- 0"								
✳	24	10	9'- 6"	2W1001	STR												
	46	5	4'- 6"	2W506.2	STR												
✳	8	5	21'- 8"	2W507.2	STR												
	23	5	5'- 1"	2W508.2	S10		2'- 2"	0'- 9"	2'- 2"								
	APPROACH SLAB NO. 1																
	18	5	33'- 0"	1AS501.2	STR												
✳	34	9	25'- 6"	1AS901.2	1	1'- 3"	24'- 3"							0'- 11"			
	ABUTMENT NO. 2																
	36	5	7'- 6"	2A501	STR												
▲	18	5	38'- 10"	2A502	STR												
	36	5	5'- 0"	2A503	17		4'- 2"	0'- 10"	0'- 0"								
	36	5	9'- 1"	2A504	STR												
	36	5	7'- 8"	2A505	STR												
	36	5	7'- 3"	2A506	16	2'- 2"	2'- 6"	1'- 2"	1'- 5"				1'- 0"		1'- 0"		
	26	5	36'- 6"	2A507	STR												
	11	5	4'- 0"	2A508	22		2'- 0"	2'- 0"	0'- 0"				1'- 6"	0'- 0"	1'- 6"	0'- 0"	
	11	5	6'- 4"	2A509	22		3'- 0"	3'- 4"	0'- 0"				2'- 1"	0'- 0"	2'- 1"	0'- 0"	
	11	5	6'- 9"	2A510	22		3'- 7"	3'- 2"	0'- 0"				2'- 7"	0'- 0"	2'- 7"	0'- 0"	
	11	5	3'- 10"	2A511	27		1'- 11"	1'- 11"					1'- 5"		1'- 5"		
	11	5	7'- 8"	2A512	22		1'- 10"	4'- 0"	1'- 10"				1'- 9"	1'- 9"	0'- 9"	0'- 9"	
	36	5	5'- 11"	2A513	17		2'- 2"	1'- 7"	2'- 2"								
✳	37	6	7'- 6"	2A601	STR												
	9	8	3'- 9"	2A801	STR												
✳	37	9	8'- 5"	2A901	17		6'- 0"	2'- 5"	0'- 0"								
	22	8	4'- 0"	2A802.2	14	2'- 3"	1'- 9"	0'- 0"	0'- 0"	0'- 0"			1'- 3"		1'- 3"		
	WINGWALL NO. 3																
✳ ▲	35	5	8'- 0"	3W501	STR												
▲	18	5	29'- 1"	3W502	STR												
	28	5	4'- 9"	3W503	17		3'- 10"	0'- 11"	0'- 0"								
	22	5	9'- 6"	3W504	STR												
	6	5	7'- 6"	3W505	STR												
	22	5	8'- 8"	3W506	STR												
	6	5	6'- 8"	3W507	STR												
▲	22	5	26'- 4"	3W509	STR												
	18	5	36'- 0"	3W512	STR												
	37	5	7'- 6"	3W513	STR												
	37	5	4'- 10"	3W514	17		3'- 11"	0'- 11"	0'- 0"								
	14	5	36'- 0"	3W516	STR												
	9	5	12'- 2"	3W519	17		3'- 6"	8'- 8"	0'- 0"								
	9	5	5'- 6"	3W520	17		3'- 4"	2'- 2"	0'- 0"								
	9	5	13'- 4"	3W521	19		2'- 2"	9'- 0"	2'- 2"				0'- 11"		1'- 10"		12'- 9"
	37	6	7'- 4"	3W601	17		4'- 1"	3'- 3"	0'- 0"								
	37	7	7'- 6"	3W701	STR												
	16	8	3'- 9"	3W801	STR												
	29	8	8'- 0"	3W802	STR												
	56	9	8'- 1"	3W901	17		4'- 10"	3'- 3"	0'- 0"								
	56	5	5'- 3"	3W508.2	STR												
	9	5	25'- 0"	3W510.2	STR												
	28	5	6'- 1"	3W511.2	S10		2'- 8"	0'- 9"	2'- 8"								
	74	5	8'- 9"	3W515.2	STR												
	11	5	36'- 0"	3W517.2	STR												
	37	5	6'- 9"	3W518.2	S10		3'- 0"	0'- 9"	3'- 0"								
	WINGWALL NO. 4																
	8	5	8'- 0"	4W501	STR												
▲	18	5	9'- 10"	4W502	STR												
	8	5	4'- 9"	4W503	17		3'- 10"	0'- 11"	0'- 0"								
	8	5	9'- 8"	4W504	STR												
	8	5	9'- 2"	4W505	STR												
▲	22	5	8'- 0"	4W507	STR												
	3	8	3'- 9"	4W801	STR												
	8	8	8'- 0"	4W802	STR												
	8	9	8'- 1"	4W901	17		4'- 10"	3'- 3"	0'- 0"								
	14	5	5'- 3"	4W506.2	STR												
✳	8	5	5'- 5"	4W508.2	STR												
	7	5	6'- 9"	4W509.2	S10		3'- 0"	0'- 9"	3'- 0"								

~ NOTES ~

1. UNLESS OTHERWISE DESIGNATED, ALL BAR REINFORCEMENT FOR CONCRETE IN SIZES UP TO AND INCLUDING NO. 18 SHALL CONFORM TO THE REQUIREMENTS OF THE "SPECIFICATIONS FOR DEFORMED BILLET-STEEL BARS FOR CONCRETE REINFORCEMENT", AASHTO M 31 (ASTM A 615-SI). ALL BARS SHALL BE GRADE 60, UNLESS OTHERWISE DESIGNATED.
2. FOR TYPICAL BENDING DETAILS, RECOMMENDED PIN DIAMETER "D" OF BENDS AND HOOKS, AND OTHER STANDARD PRACTICE, SEE CURRENT CONCRETE REINFORCING STEEL INSTITUTE "MANUAL OF STANDARD PRACTICE".
3. BARS WHICH REQUIRE MORE ACCURATE BENDING THAN STANDARD PRACTICES SHOULD HAVE LIMITS INDICATED.
4. ALL DIMENSIONS ARE OUT TO OUT OF BAR EXCEPT "A" AND "G" ON STANDARD 180 DEGREE AND 135 DEGREE HOOKS.
5. "J" DIMENSION ON 180 DEGREE HOOKS TO BE SHOWN ONLY WHERE NECESSARY TO RESTRICT HOOK SIZE. OTHERWISE, STANDARD HOOKS ARE TO BE USED.
6. "H" DIMENSION ON STIRRUPS TO BE SHOWN ONLY WHEN NECESSARY TO MAINTAIN CLEARANCES.
7. WHERE SLOPE DIFFERS FROM 45 DEGREES, DIMENSIONS "H" AND "K" MUST BE SHOWN.
8. ▲ DENOTES BARS TO BE CUT IN FIELD.
9. ✳ DENOTES ONE EXTRA BAR ADDED FOR TESTING PURPOSES.
10. △ DENOTES TWO EXTRA BARS ADDED FOR TESTING PURPOSES.
11. E IN BAR MARK PREFIX DENOTES EPOXY COATED REINFORCING STEEL.

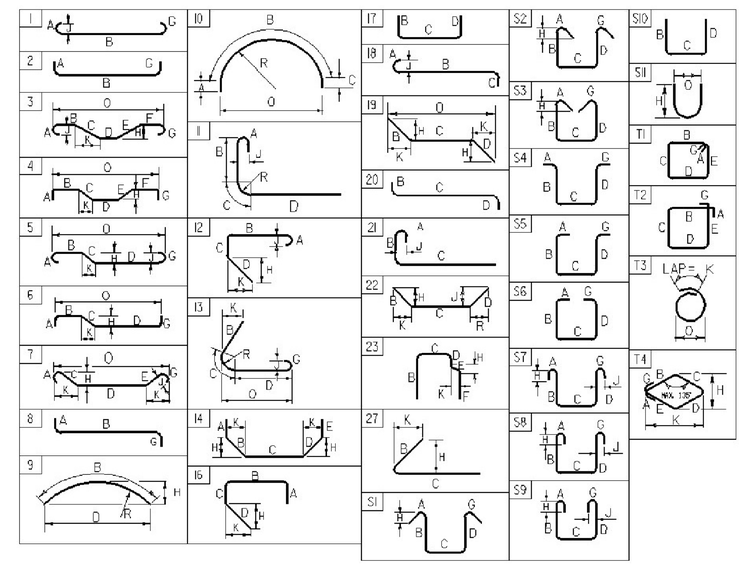

ASTM STANDARD REINFORCING BARS

BAR SIZE DESIGNATION	WEIGHT POUNDS PER FOOT	NOMINAL DIMENSIONS ROUND SECTION		
		DIAMETER INCHES	AREA INCHES ^{2}	PERIMETER INCHES
#3	0.376	0.375	0.11	1.178
#4	0.668	0.500	0.20	1.571
#5	1.043	0.625	0.31	1.963
#6	1.502	0.750	0.44	2.356
#7	2.044	0.875	0.60	2.749
#8	2.670	1.000	0.79	3.142
#9	3.400	1.128	1.00	3.544
#10	4.303	1.270	1.27	3.990
#11	5.313	1.410	1.56	4.430
#14	7.65	1.693	2.25	5.32
#18	13.60	2.257	4.00	7.09

THE REINFORCING STEEL MARKS IN THIS SCHEDULE INDICATE THE REQUIRED BAR CORROSION RESISTANCE LEVEL. CORROSION RESISTANCE LEVEL IS DENOTED WITH A .2 FOR LEVEL TWO SUFFIX OR .3 FOR LEVEL THREE SUFFIX. .1 FOR LEVEL ONE IS TO BE OMITTED. THE BAR MATERIAL TYPE AND BAR STEEL GRADE PROVIDED FOR EACH CORRIOSION LEVEL WILL BE RECORDED ON THE PLANSET PI SHEET FOR AS-BUILT RECORD PLAN ARCHIVES.

VHB Vanasse Hangen Brustlin, Inc.

PROJECT NAME: BRATTLEBORO
PROJECT NUMBER: BRO 1442 (35)

FILE NAME: z10j062rss.dgn
PROJECT MANAGER: S.E. BURBANK
DESIGNED BY: E.A FIALA
REINFORCING STEEL SCHEDULE (1 OF 2)
PLOT DATE: 6/5/2013
DRAWN BY: E.A FIALA
CHECKED BY: S.E. BURBANK
SHEET 49 OF 68

STATE OF VERMONT
AGENCY OF TRANSPORTATION

REINFORCING STEEL SCHEDULE

ITEM	EACH	SIZE	LENGTH	MARK	TYPE	A	B	C	D	E	F	G	H	J	K	R	O
APPROACH SLAB NO. 2																	
✳	7	5	32'- 5"	2AS501.2	STR												
	6	5	32'- 7"	2AS502.2	STR												
	6	5	32'- 9"	2AS503.2	STR												
	33	9	25'- 6"	2AS901.2	1	1'- 3"	24'- 3"							0'- 11"			

ITEM	EACH	SIZE	LENGTH	MARK	TYPE	A	B	C	D	E	F	G	H	J	K	R	O

~ NOTES ~

1. UNLESS OTHERWISE DESIGNATED, ALL BAR REINFORCEMENT FOR CONCRETE IN SIZES UP TO AND INCLUDING NO. 18 SHALL CONFORM TO THE REQUIREMENTS OF THE "SPECIFICATIONS FOR DEFORMED BILLET-STEEL BARS FOR CONCRETE REINFORCEMENT", AASHTO M 31 (ASTM A 615-SI). ALL BARS SHALL BE GRADE 60, UNLESS OTHERWISE DESIGNATED.
2. FOR TYPICAL BENDING DETAILS, RECOMMENDED PIN DIAMETER "D" OF BENDS AND HOOKS, AND OTHER STANDARD PRACTICE, SEE CURRENT CONCRETE REINFORCING STEEL INSTITUTE "MANUAL OF STANDARD PRACTICE".
3. BARS WHICH REQUIRE MORE ACCURATE BENDING THAN STANDARD PRACTICES SHOULD HAVE LIMITS INDICATED.
4. ALL DIMENSIONS ARE OUT TO OUT OF BAR EXCEPT "A" AND "G" ON STANDARD 180 DEGREE AND 135 DEGREE HOOKS.
5. "J" DIMENSION ON 180 DEGREE HOOKS TO BE SHOWN ONLY WHERE NECESSARY TO RESTRICT HOOK SIZE. OTHERWISE, STANDARD HOOKS ARE TO BE USED.
6. "H" DIMENSION ON STIRRUPS TO BE SHOWN ONLY WHEN NECESSARY TO MAINTAIN CLEARANCES.
7. WHERE SLOPE DIFFERS FROM 45 DEGREES, DIMENSIONS "H" AND "K" MUST BE SHOWN.
8. ▲ DENOTES BARS TO BE CUT IN FIELD.
9. ✳ DENOTES ONE EXTRA BAR ADDED FOR TESTING PURPOSES.
10. △ DENOTES TWO EXTRA BARS ADDED FOR TESTING PURPOSES.
11. E DENOTES EPOXY COATED REINFORCING STEEL.

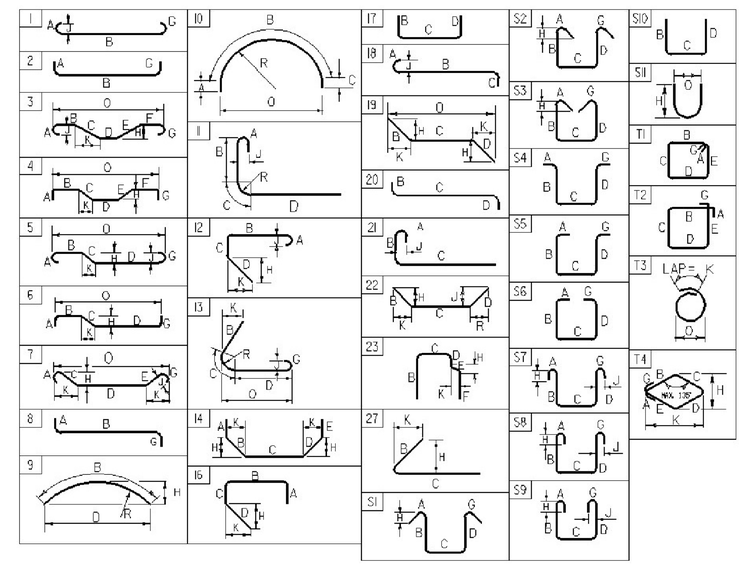

ASTM STANDARD REINFORCING BARS

BAR SIZE DESIGNATION	WEIGHT POUNDS PER FOOT	NOMINAL DIMENSIONS ROUND SECTION		
		DIAMETER INCHES	AREA INCHES ^{2}	PERIMETER INCHES
#3	0.376	0.375	0.11	1.178
#4	0.668	0.500	0.20	1.571
#5	1.043	0.625	0.31	1.963
#6	1.502	0.750	0.44	2.356
#7	2.044	0.875	0.60	2.749
#8	2.670	1.000	0.79	3.142
#9	3.400	1.128	1.00	3.544
#10	4.303	1.270	1.27	3.990
#11	5.313	1.410	1.56	4.430
#14	7.65	1.693	2.25	5.32
#18	13.60	2.257	4.00	7.09

THE REINFORCING STEEL MARKS IN THIS SCHEDULE INDICATE THE REQUIRED BAR CORROSION RESISTANCE LEVEL. CORROSION RESISTANCE LEVEL IS DENOTED WITH A .2 FOR LEVEL TWO SUFFIX OR .3 FOR LEVEL THREE SUFFIX. .1 FOR LEVEL ONE IS TO BE OMITTED. THE BAR MATERIAL TYPE AND BAR STEEL GRADE PROVIDED FOR EACH CORRIOSION LEVEL WILL BE RECORDED ON THE PLANSET P1 SHEET FOR AS-BUILT RECORD PLAN ARCHIVES.

VHB *Vanasse Hangen Brustlin, Inc.*

PROJECT NAME: **BRATTLEBORO**
PROJECT NUMBER: **BRO 1442 (35)**

FILE NAME: **z10j062rss.dgn** PLOT DATE: **6/5/2013**
PROJECT MANAGER: **S.E. BURBANK** DRAWN BY: **E.A FIALA**
DESIGNED BY: **E.A FIALA** CHECKED BY: **S.E. BURBANK**
REINFORCING STEEL SCHEDULE (2 OF 2) SHEET **50** OF **68**

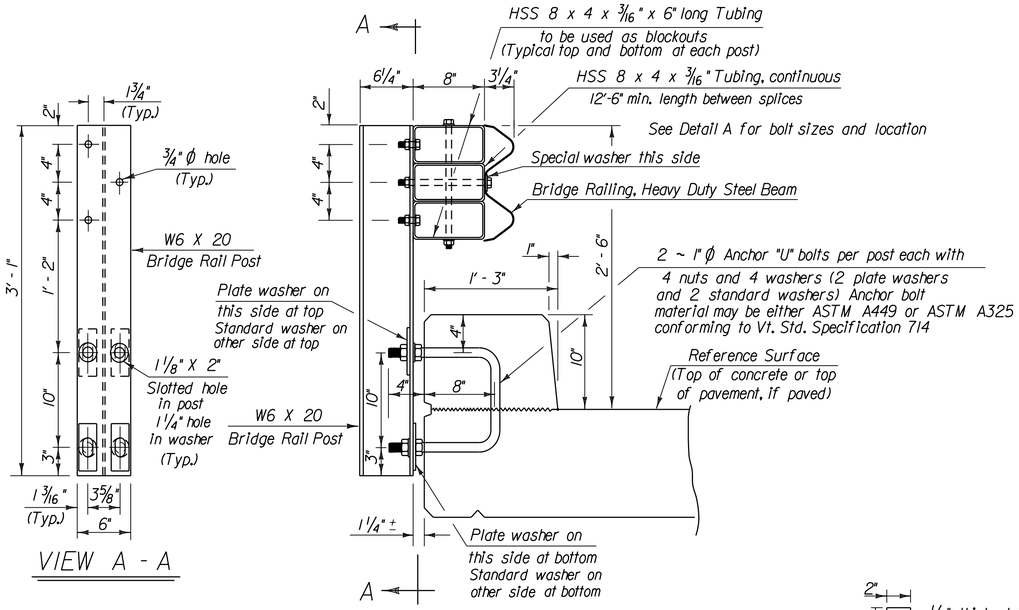

VIEW A - A

FASCIA MOUNTED WITH CURB

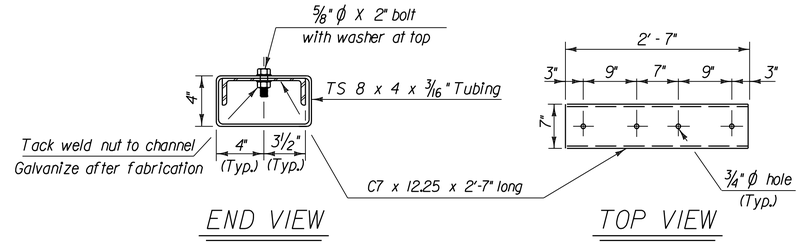

END VIEW

TOP VIEW

SPLICE BAR DETAILS

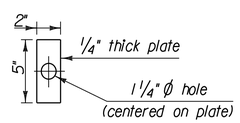

PLATE WASHER DETAIL

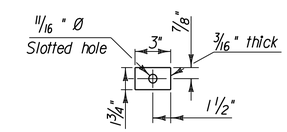

SPECIAL WASHER DETAIL

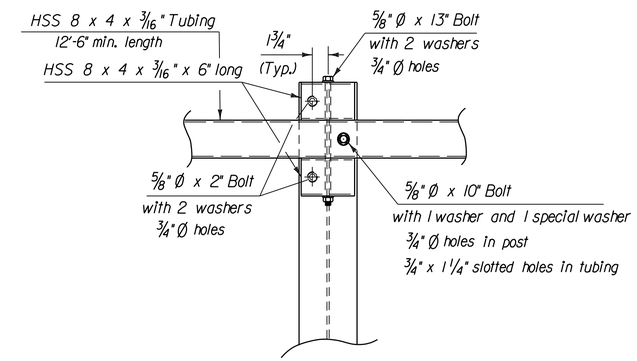

DETAIL A

Steel Beam Guard Rail Not Shown

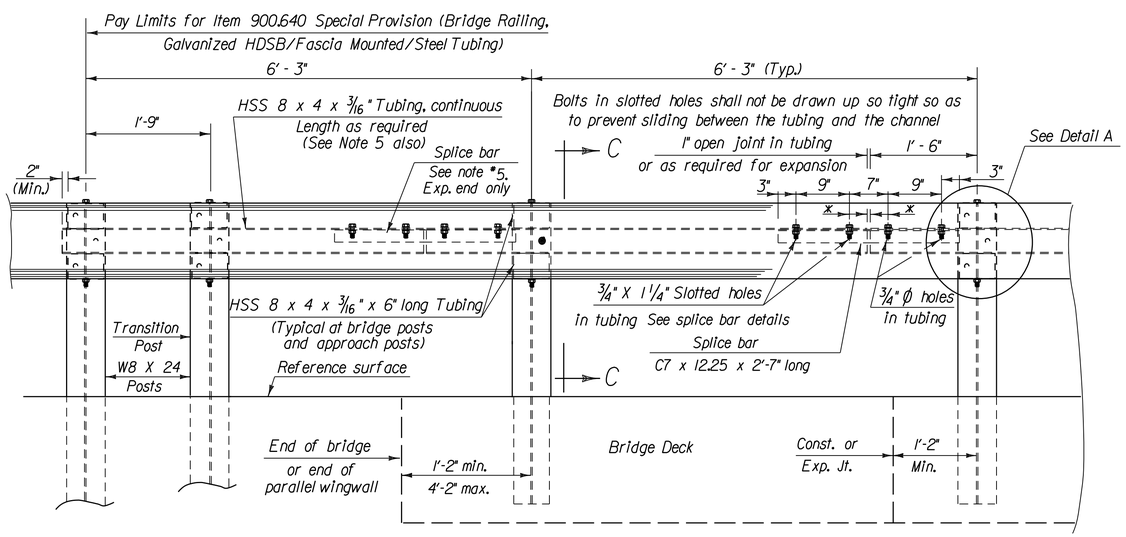

RAILING ELEVATION VIEW
(SHOWN LOOKING FROM ℄ WITHOUT CURB)

* 3/4" min. These dimensions will vary depending upon the total amount of expansion required

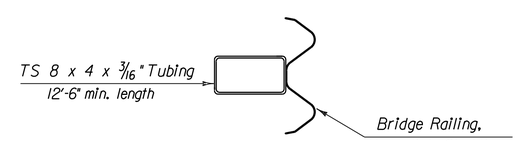

VIEW C - C

NOTES

1. ALL WORK AND MATERIALS SHALL CONFORM TO SECTION 525.
2. PRIOR TO GALVANIZING THE ASSEMBLED POST, GRIND ALL EDGES TO A MINIMUM RADIUS OF 1/16".
3. ALL POSTS SHALL BE SET NORMAL TO GRADE.
4. SPLICES FOR THE STEEL BEAM GUARDRAIL SHALL LAP IN THE DIRECTION OF TRAFFIC.
5. A RAILING JOINT SPLICE SHALL BE PROVIDED IN ANY RAIL BAY SPANNING THE END OF AN INTEGRAL ABUTMENT BRIDGE AND AT ALL SUPERSTRUCTURE EXPANSION JOINTS.
6. SEE STANDARD DRAWING G-1 FOR DETAILS OF DELINEATORS. A DELINEATOR SHALL BE LOCATED AT EVERY FIFTH POST. WHITE IS TO BE INSTALLED ON THE DRIVER'S RIGHT. FOR ONE WAY BRIDGES, YELLOW IS TO BE INSTALLED ON THE DRIVER'S LEFT.
7. FOR RADII LESS THAN 950 FEET, HSS 8x4 TUBES SHALL BE SHOP BENT TO FIT THE APPLICABLE CURVE.
8. HOLES IN RAIL FOR RAIL TUBE ATTACHMENT MAY BE FIELD DRILLED. HOLES SHALL BE COATED WITH AN APPROVED ZINC-RICH PAINT PRIOR TO INSTALLATION.
9. SEE STANDARDS G-1 AND G-1d FOR ADDITIONAL DETAILS CONCERNING GUARDRAIL.

Vanasse Hangen Brustlin, Inc.

PROJECT NAME: BRATTLEBORO	
PROJECT NUMBER: BRO 1442(35)	
FILE NAME: z10j062brail.dgn	PLOT DATE: 10/14/2013
PROJECT LEADER: S.E. BURBANK	DRAWN BY: VTRANS/VHB
DESIGNED BY: E.A. FIALA	CHECKED BY: S.E. BURBANK
BRIDGE RAIL DETAILS	SHEET 51 OF 68

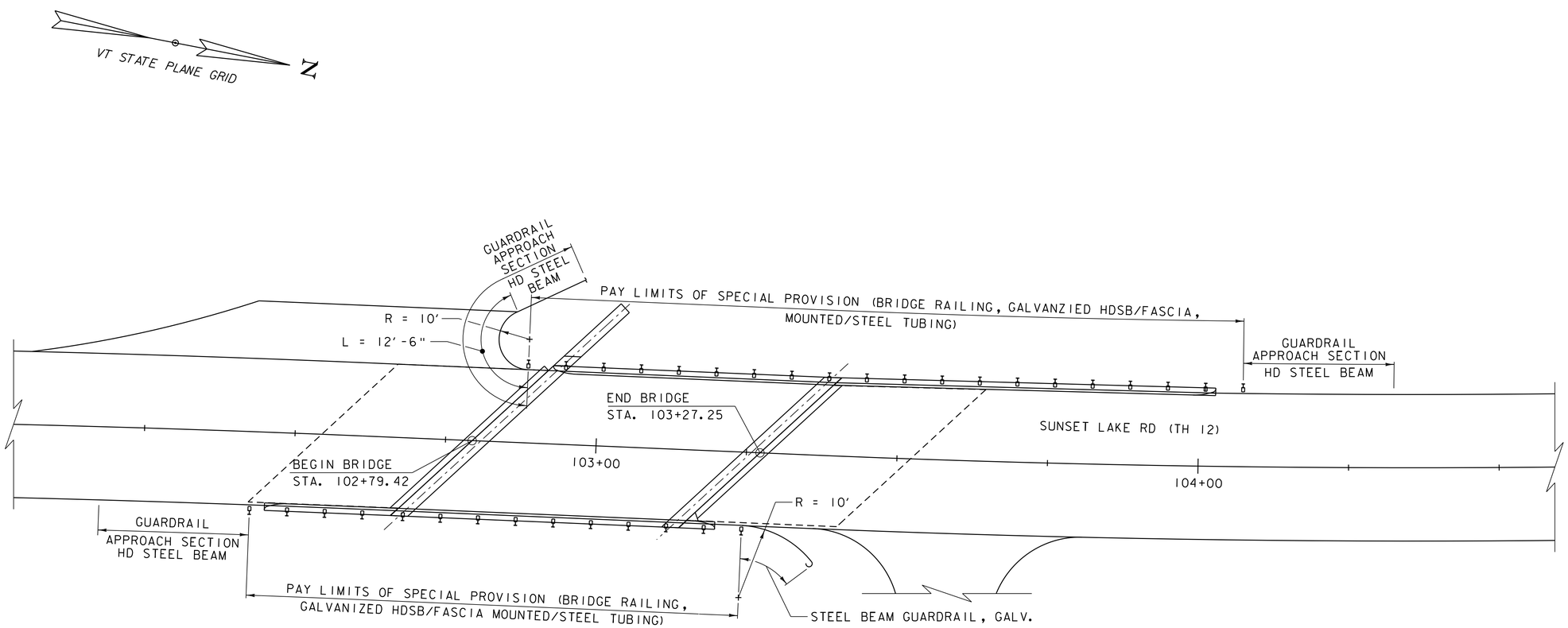

BRIDGE RAIL LAYOUT

SCALE 1/8" = 1'-0"

NOTE: SEE VTRANS STD S-367B FOR APPROACH RAILING SPACING.

Vanasse Hangen Brustlin, Inc.

PROJECT NAME: BRATTLEBORO	
PROJECT NUMBER: BRO 1442(35)	
FILE NAME: z10j062brail.dgn	PLOT DATE: 10/14/2013
PROJECT LEADER: S.E. BURBANK	DRAWN BY: E.A. FIALA
DESIGNED BY: E.A. FIALA	CHECKED BY: S.E. BURBANK
BRIDGE RAIL LAYOUT SHEET	SHEET 52 OF 68

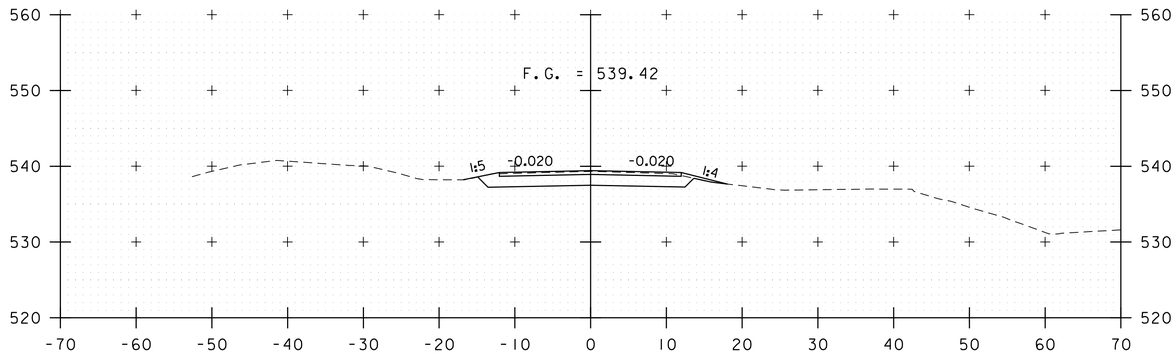

101+75

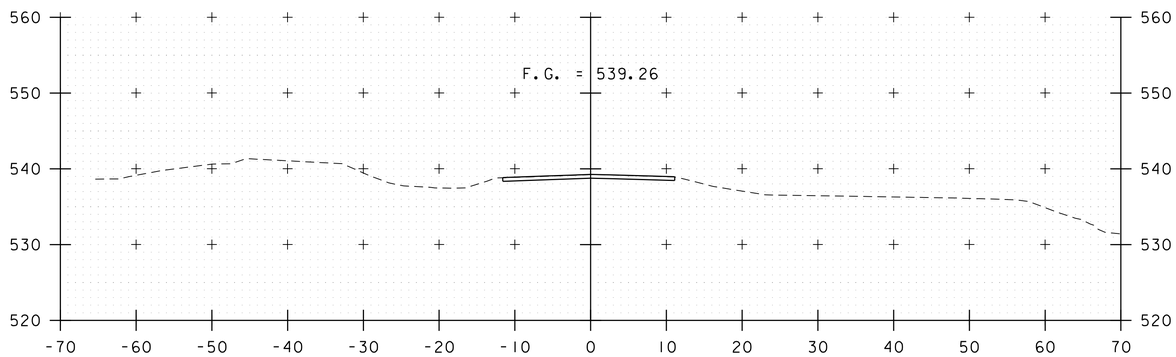

101+50

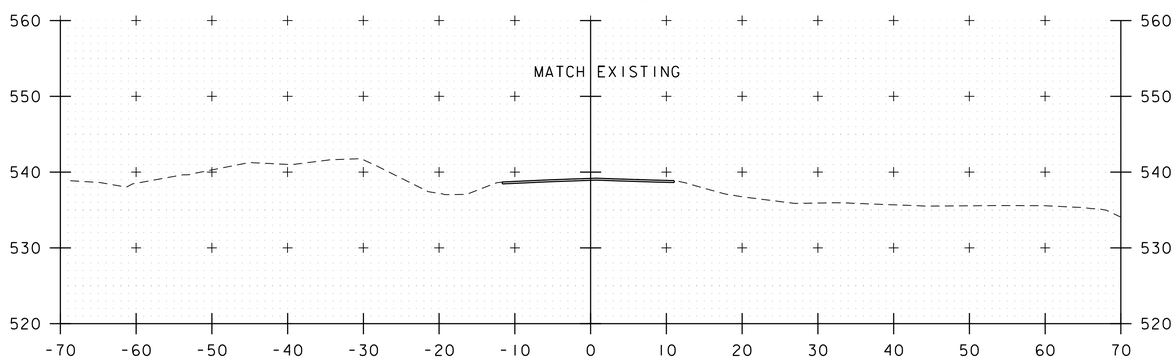

101+35
BEGIN APPROACH
STA 101+35.00

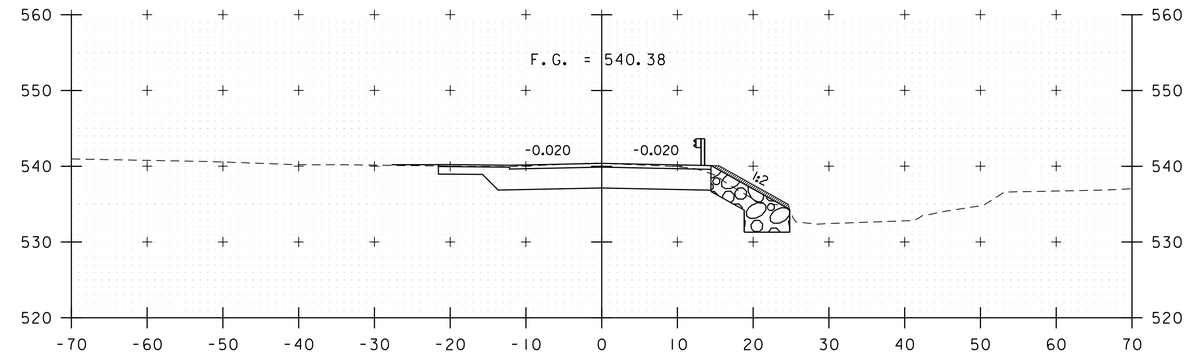

PRIVATE ROAD LT
102+45

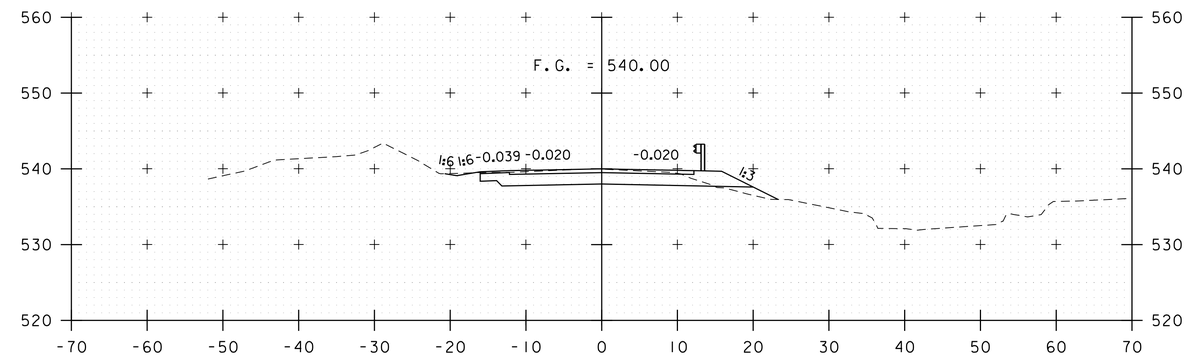

102+25

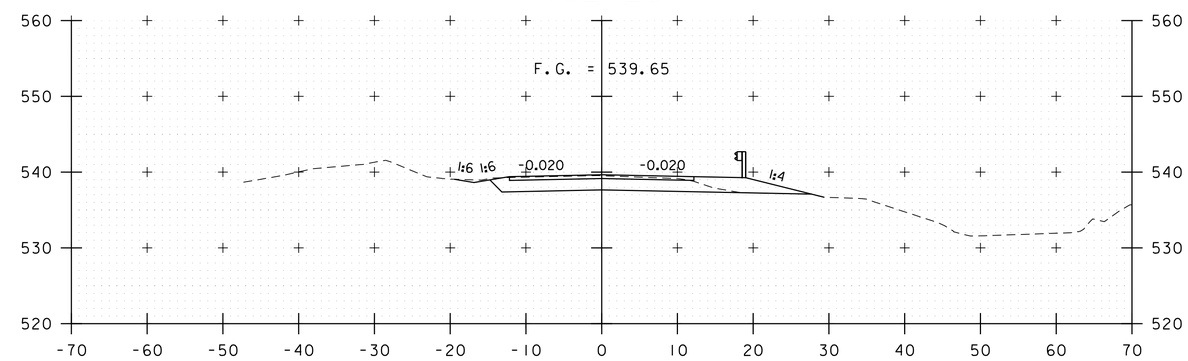

102+00
BEGIN PROJECT
STA 101+80.00

ROADWAY CROSS SECTIONS
SCALE 1" = 10'-0"
STA. 101+35 TO STA. 102+45

Vanasse Hangen Brustlin, Inc.

PROJECT NAME: BRATTLEBORO	
PROJECT NUMBER: BRO 1442(35)	
FILE NAME: z10j062xsl.dgn	PLOT DATE: 10/14/2013
PROJECT LEADER: S.E. BURBANK	DRAWN BY: E.A. FIALA
DESIGNED BY: E.A. FIALA	CHECKED BY: S.E. BURBANK
ROADWAY CROSS SECTIONS (1 OF 4)	SHEET 53 OF 68

VHB 57428

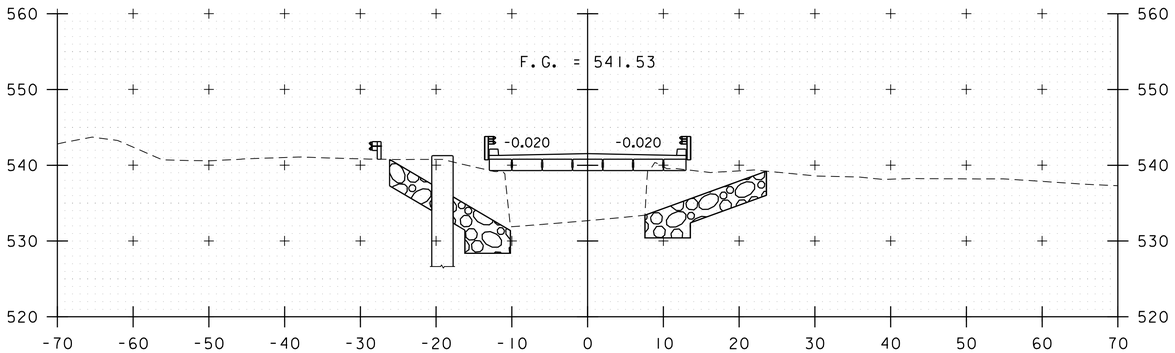

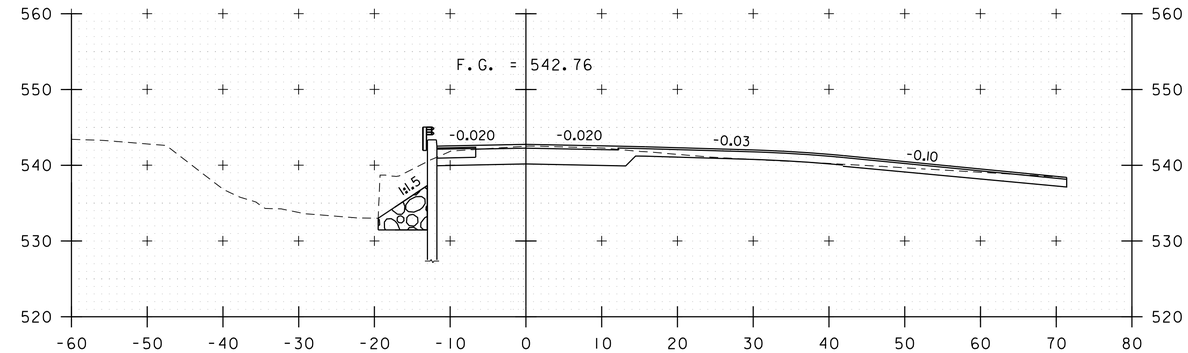

DRIVEWAY RT
103+59

103+00
BEGIN BRIDGE
STA 102+79.42

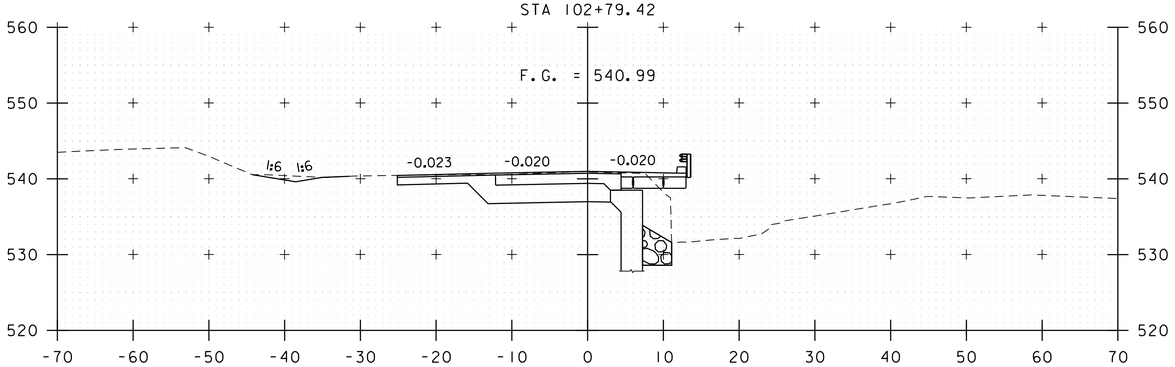

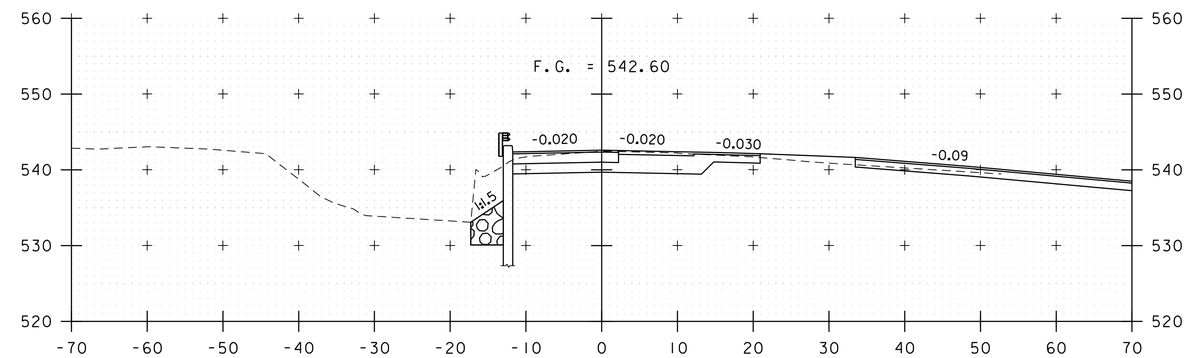

102+75

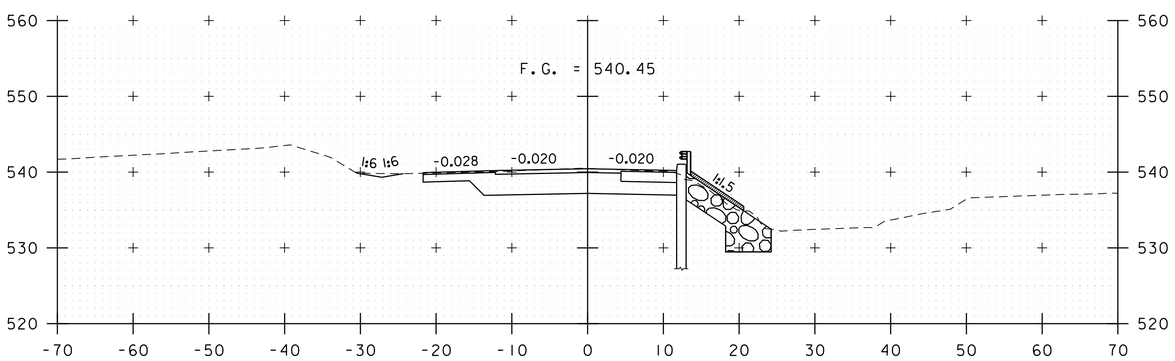

103+50
END BRIDGE
STA 103+27.25

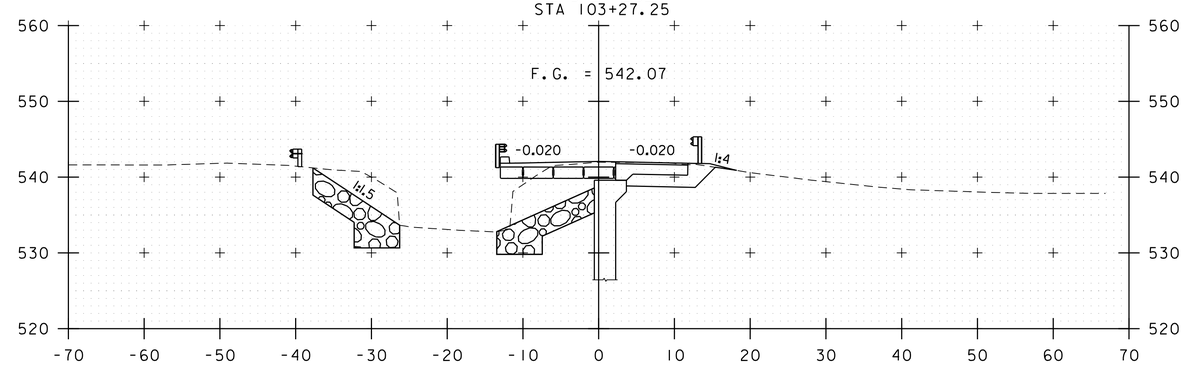

102+50

103+25

ROADWAY CROSS SECTIONS
SCALE 1" = 10'-0"
STA. 102+50 TO STA. 103+59

Vanasse Hangen Brustlin, Inc.

PROJECT NAME: BRATTLEBORO	
PROJECT NUMBER: BRO 1442(35)	
FILE NAME: z10j062xsl.dgn	PLOT DATE: 10/14/2013
PROJECT LEADER: S.E. BURBANK	DRAWN BY: E.A. FIALA
DESIGNED BY: E.A. FIALA	CHECKED BY: S.E. BURBANK
ROADWAY CROSS SECTIONS (2 OF 4)	SHEET 54 OF 68

VHB 57428

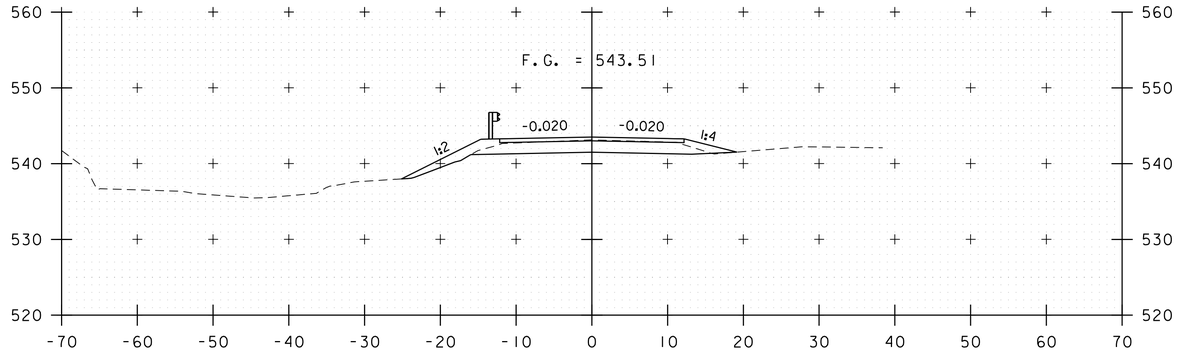

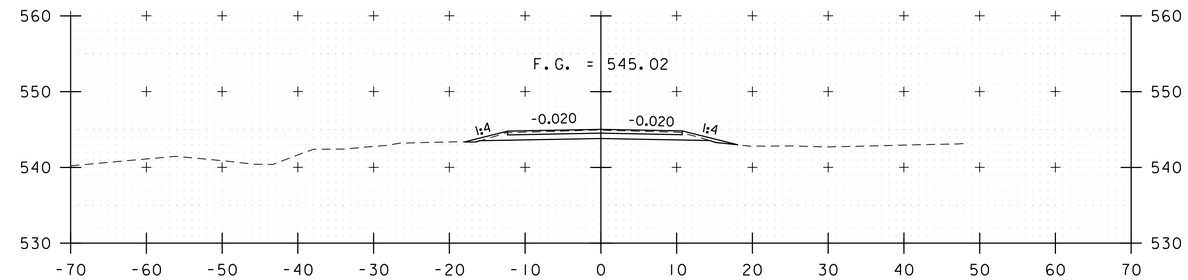

104+25

105+00
END PROJECT

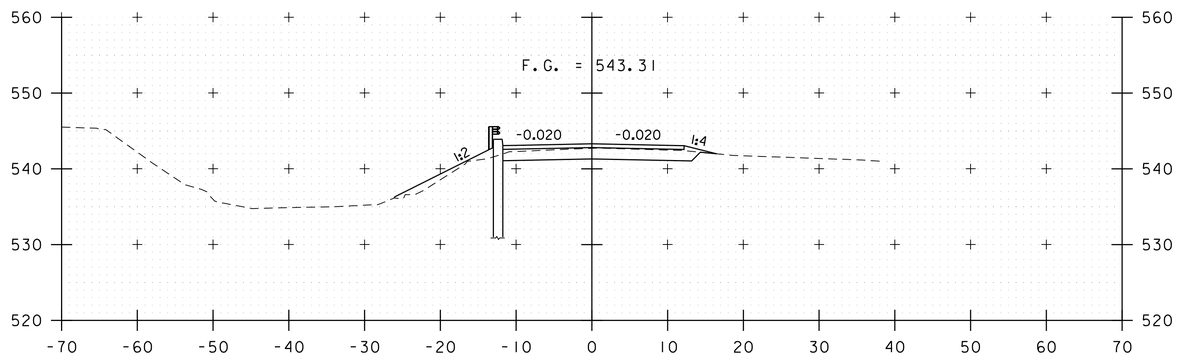

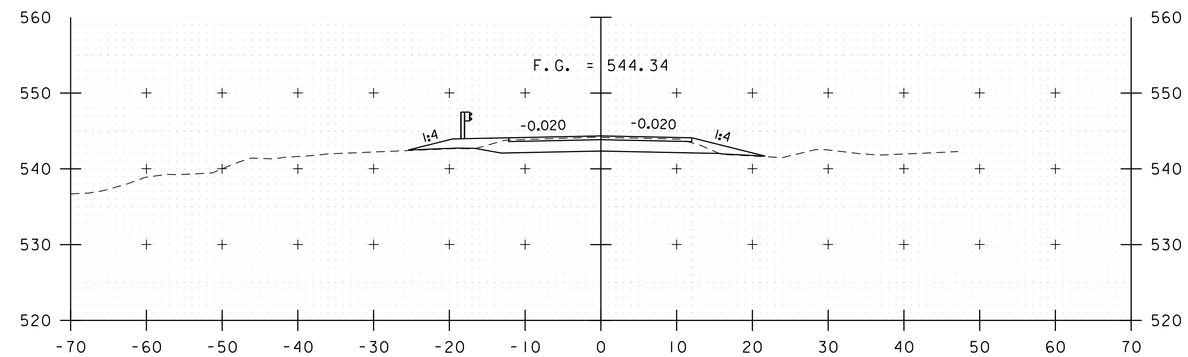

104+00

104+75

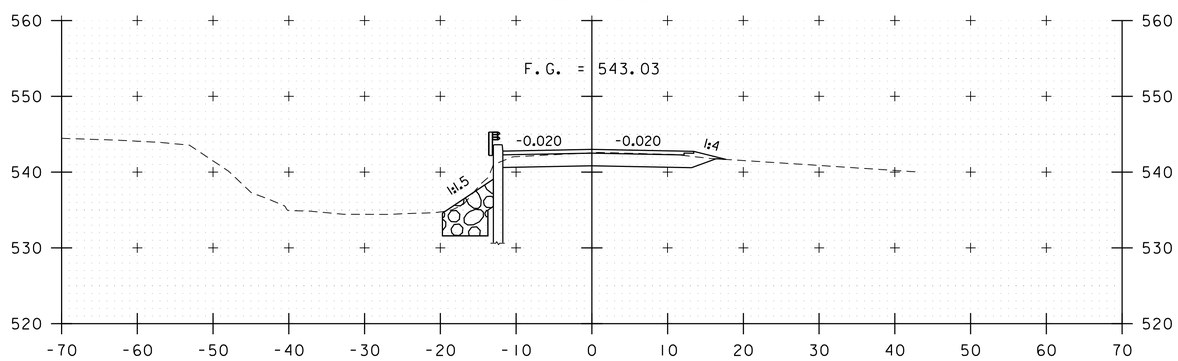

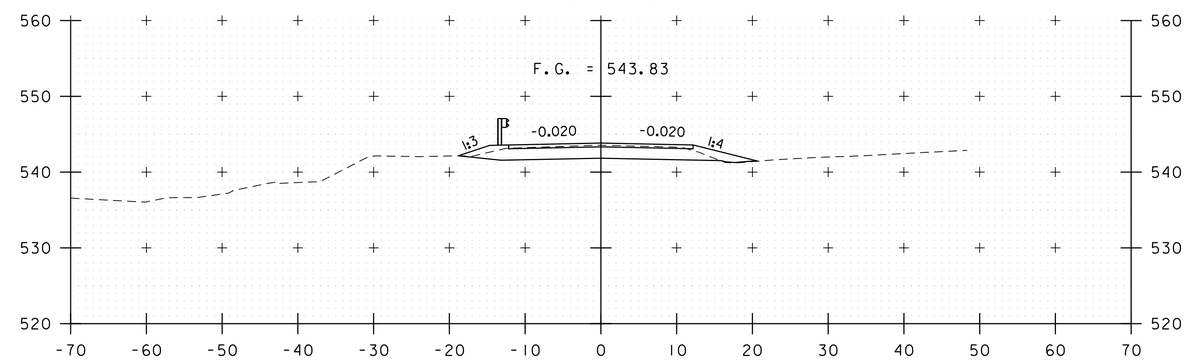

103+75

104+50

ROADWAY CROSS SECTIONS

SCALE 1" = 10'-0"

STA. 103+75 TO STA. 105+00

Vanasse Hangen Brustlin, Inc.

PROJECT NAME: BRATTLEBORO	
PROJECT NUMBER: BRO 1442(35)	
FILE NAME: z10j062xs1.dgn	PLOT DATE: 10/14/2013
PROJECT LEADER: S.E. BURBANK	DRAWN BY: E.A. FIALA
DESIGNED BY: E.A. FIALA	CHECKED BY: S.E. BURBANK
ROADWAY CROSS SECTIONS (3 OF 4)	SHEET 55 OF 68

VHB 57428

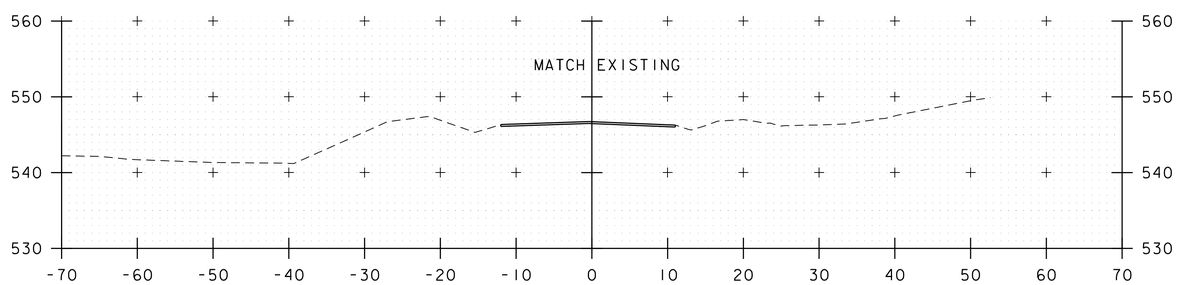

105+45
END APPROACH

F.G. = 545.89

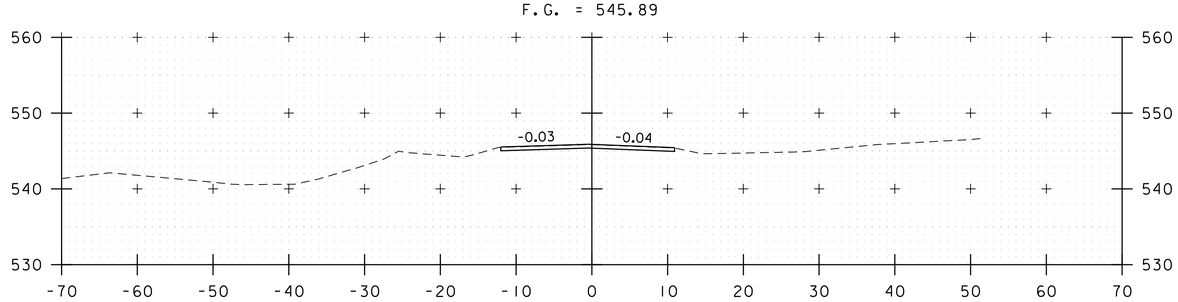

105+25

ROADWAY CROSS SECTIONS
SCALE 1" = 10'-0"
STA. 105+25 TO STA. 105+45

Vanasse Hangen Brustlin, Inc.

PROJECT NAME: BRATTLEBORO	
PROJECT NUMBER: BRO 1442(35)	
FILE NAME: z10j062xs1.dgn	PLOT DATE: 10/14/2013
PROJECT LEADER: S.E. BURBANK	DRAWN BY: E.A. FIALA
DESIGNED BY: E.A. FIALA	CHECKED BY: S.E. BURBANK
ROADWAY CROSS SECTIONS (4 OF 4)	SHEET 56 OF 68

VHB 57428

STA. 11+28, LT
END GRUBBING MATERIAL

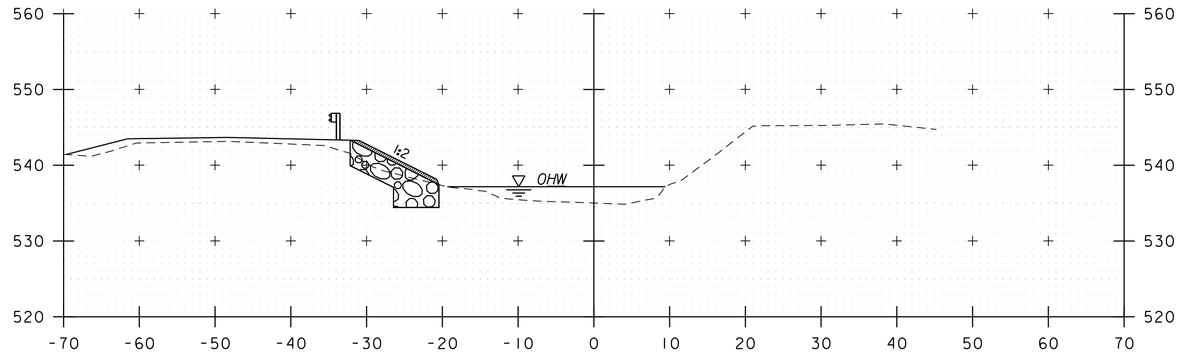

STA. 10+35, LT
BEGIN UNCLASSIFIED CHANNEL EXCAVATION
GEOTEXTILE UNDER STONE FILL
STONE FILL, TYPE III
GRUBBING MATERIAL

10+50

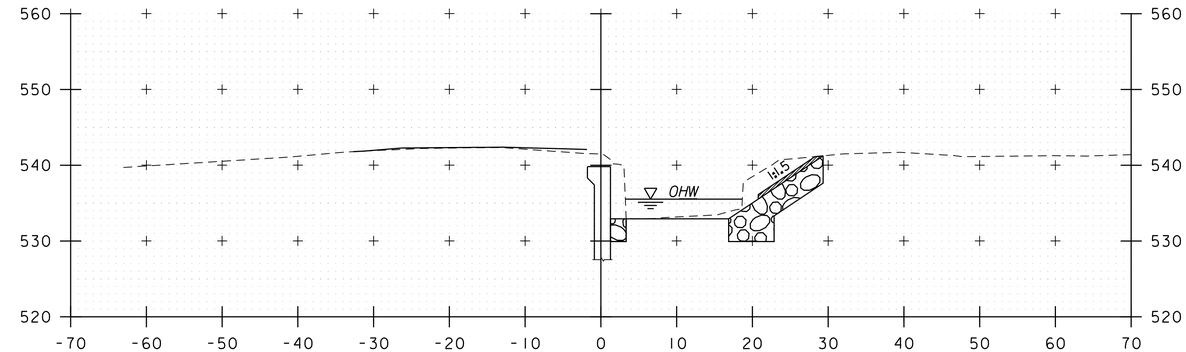

STA. 11+16, RT
BEGIN UNCLASSIFIED CHANNEL EXCAVATION
GEOTEXTILE UNDER STONE FILL
STONE FILL, TYPE III
GRUBBING MATERIAL

11+25

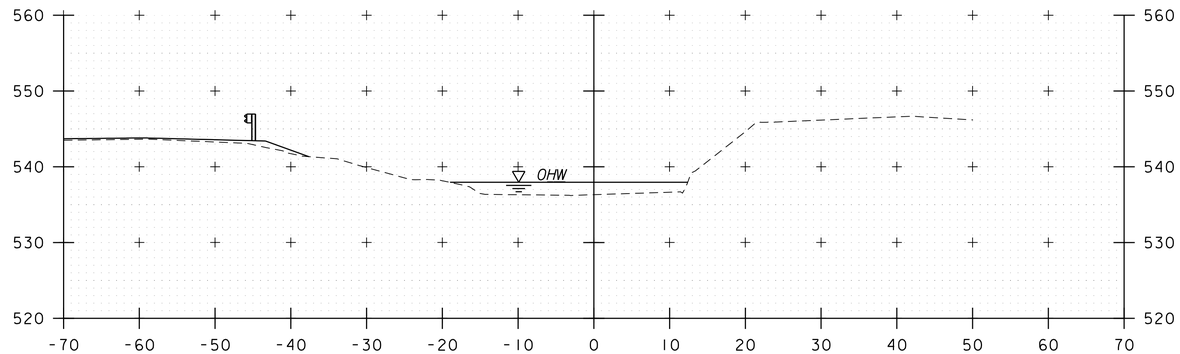

10+25

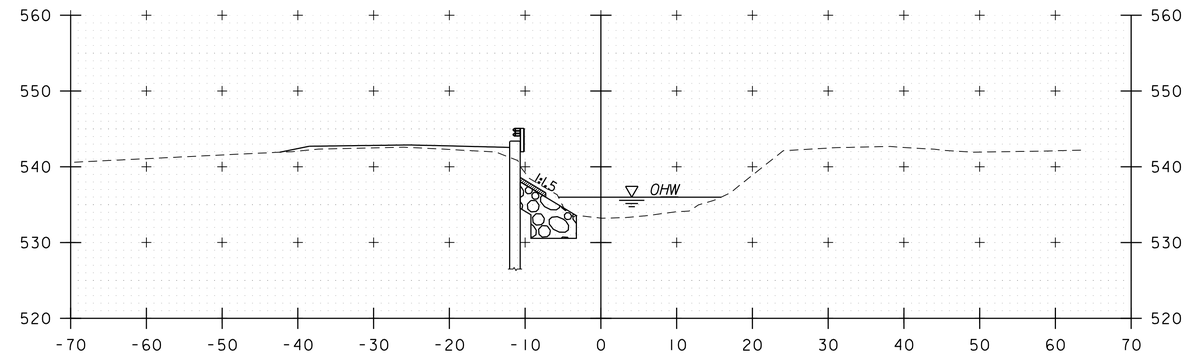

11+00

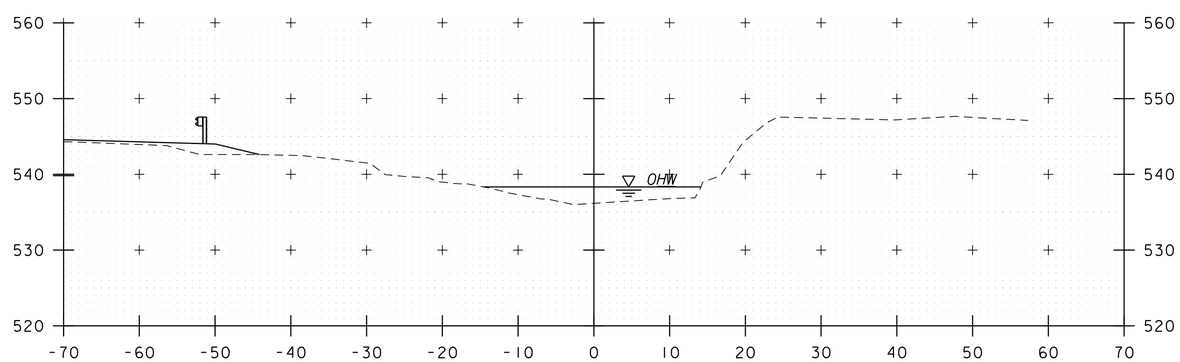

10+00

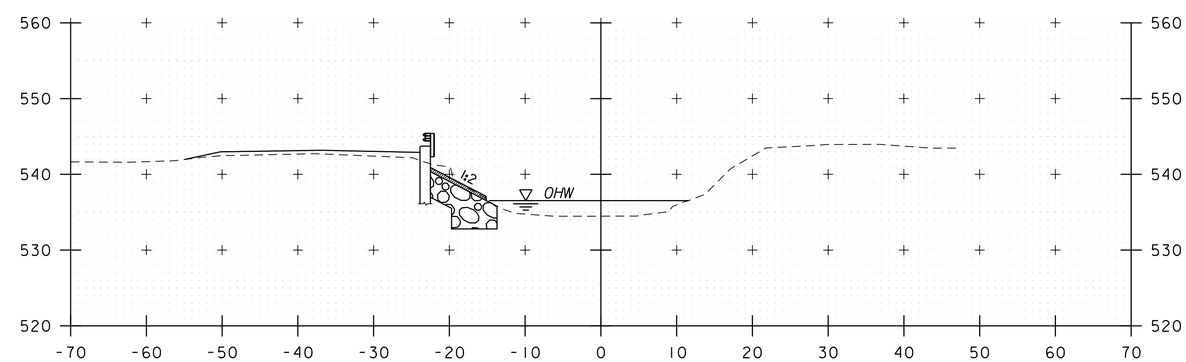

10+75

CHANNEL CROSS SECTIONS

SCALE 1" = 10'-0"

STA. 10+00 TO STA. 11+25

Vanasse Hangen Brustlin, Inc.

PROJECT NAME: BRATTLEBORO	
PROJECT NUMBER: BRO 1442(35)	
FILE NAME: z10j062xsl.dgn	PLOT DATE: 10/14/2013
PROJECT LEADER: S.E. BURBANK	DRAWN BY: E.A. FIALA
DESIGNED BY: E.A. FIALA	CHECKED BY: S.E. BURBANK
CHANNEL CROSS SECTIONS (1 OF 3)	SHEET 57 OF 68

VHB 57428

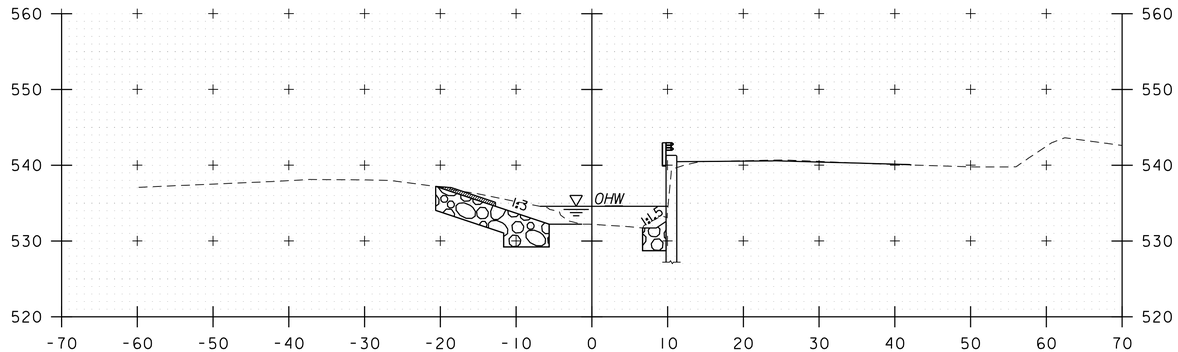

STA. 12+00, LT
END UNCLASSIFIED CHANNEL EXCAVATION
GEOTEXTILE UNDER STONE FILL
STONE FILL, TYPE III
GRUBBING MATERIAL

12+00

STA. 11+96, RT
BEGIN GRUBBING MATERIAL

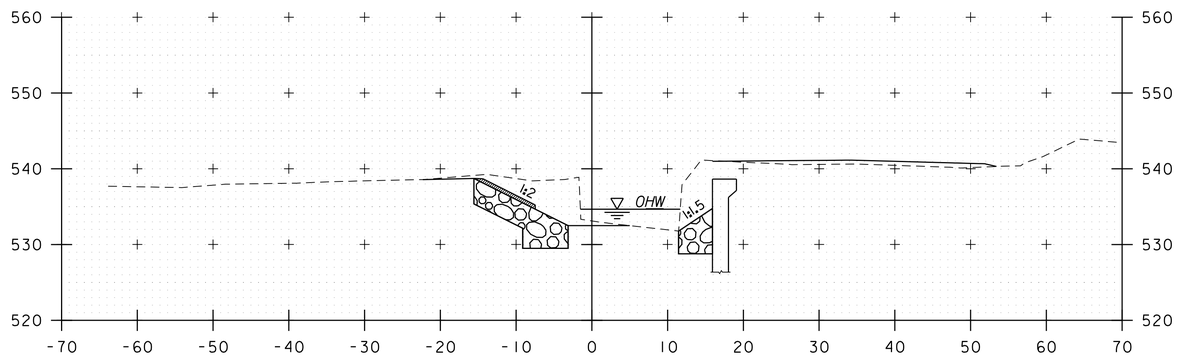

STA. 11+60, LT
BEGIN GRUBBING MATERIAL

11+75

STA. 11+55, RT
END GRUBBING MATERIAL

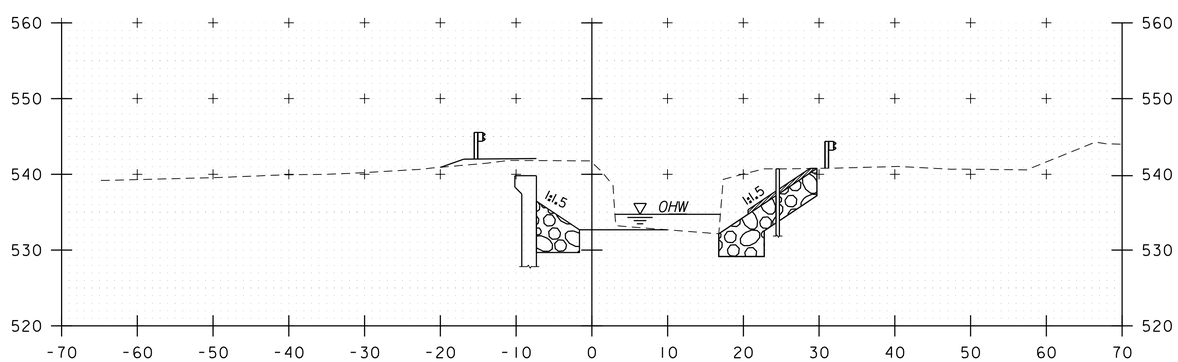

11+50

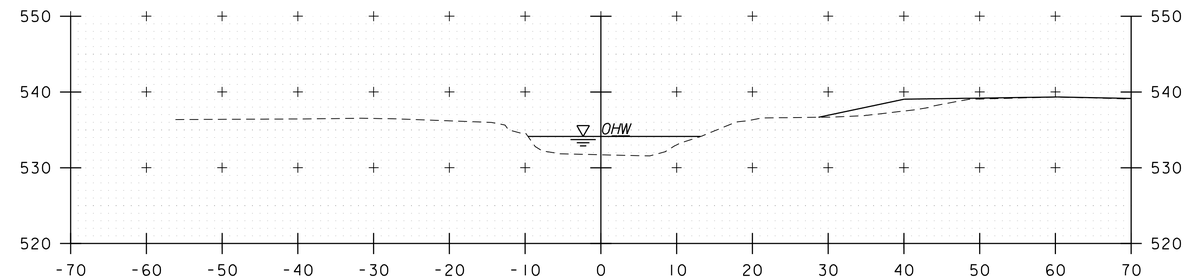

12+75

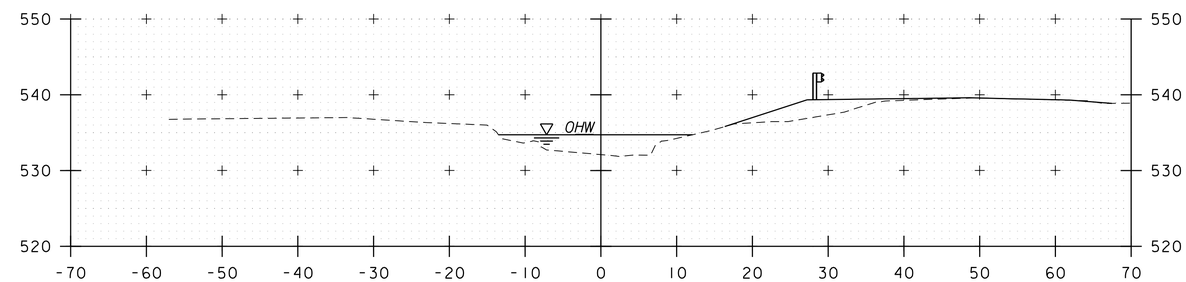

12+50

STA. 12+28, RT
END UNCLASSIFIED CHANNEL EXCAVATION
GEOTEXTILE UNDER STONE FILL
STONE FILL, TYPE III
GRUBBING MATERIAL

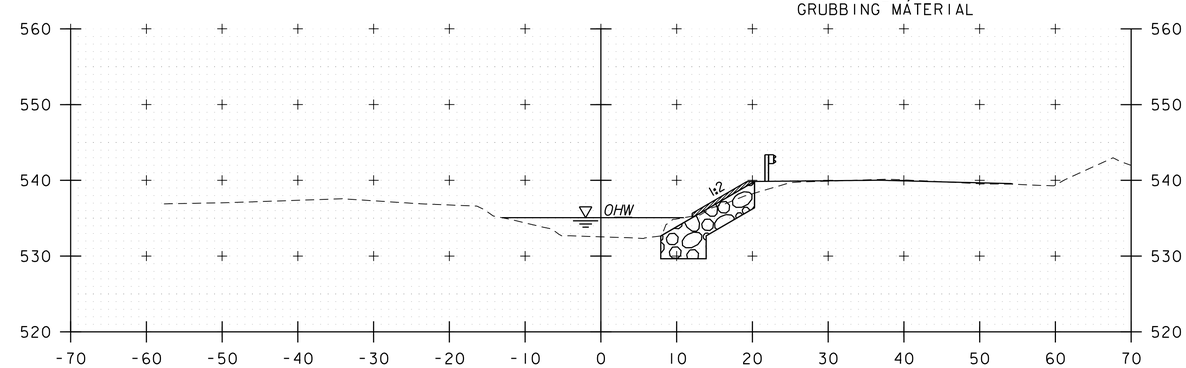

12+25

CHANNEL CROSS SECTIONS

SCALE 1" = 10'-0"

STA. 11+50 TO STA. 12+75

Vanasse Hangen Brustlin, Inc.

PROJECT NAME: BRATTLEBORO	
PROJECT NUMBER: BRO 1442(35)	
FILE NAME: z10j062xsl.dgn	PLOT DATE: 10/14/2013
PROJECT LEADER: S.E. BURBANK	DRAWN BY: E.A. FIALA
DESIGNED BY: E.A. FIALA	CHECKED BY: S.E. BURBANK
CHANNEL CROSS SECTIONS (2 OF 3)	SHEET 58 OF 68

VHB 57428

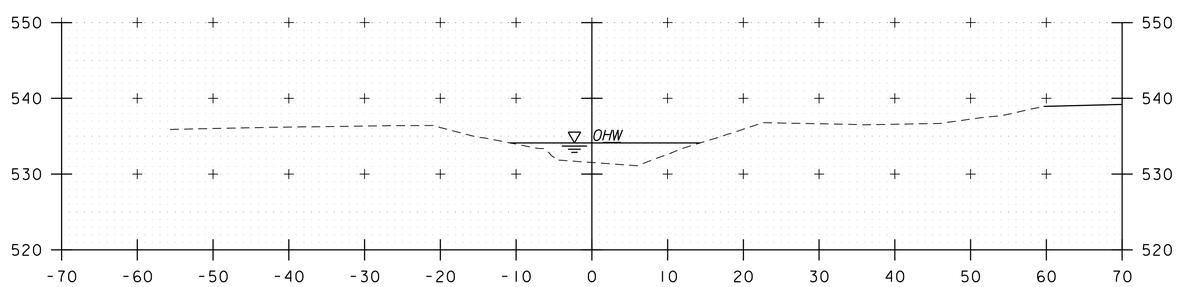

13+00

CHANNEL CROSS SECTIONS

SCALE 1" = 10'-0"

STA. 13+00

Vanasse Hangen Brustlin, Inc.

PROJECT NAME: BRATTLEBORO	
PROJECT NUMBER: BRO 1442(35)	
FILE NAME: z10j062xsl.dgn	PLOT DATE: 10/14/2013
PROJECT LEADER: S.E. BURBANK	DRAWN BY: E.A. FIALA
DESIGNED BY: E.A. FIALA	CHECKED BY: S.E. BURBANK
CHANNEL CROSS SECTIONS (3 OF 3)	SHEET 59 OF 68

VHB 57428

EPSC PLAN NARRATIVE

1.1 PROJECT DESCRIPTION

THIS PROJECT INVOLVES THE REMOVAL AND REPLACEMENT OF THE EXISTING CONCRETE SUPERSTRUCTURE AND ABUTMENTS WITH RELATED APPROACH AND CHANNEL WORK. DURING CONSTRUCTION, TRAFFIC WILL BE DETOURED OVER A TEMPORARY BRIDGE PLACED UPSTREAM. THIS PROJECT IS LOCATED ON A LOCAL ROAD LOCATED NORTH OF ROUTE 9 OVER HALLADAY BROOK IN THE TOWN OF BRATTLEBORO. THE EXISTING BRIDGE IS APPROXIMATELY 25 FEET LONG AND HAS A 20 FOOT WIDE CONCRETE DECK. THE EXISTING SUBSTRUCTURE CONSISTS OF STONE ABUTMENTS AND WINGWALLS.

THE BRIDGE REPLACEMENT INCLUDES THE REMOVAL OF THE EXISTING STRUCTURE IN ITS ENTIRETY AND THE CONSTRUCTION OF A NEW 45 FOOT SINGLE SPAN BRIDGE WITH PRECAST CONCRETE NON-VOIDED SLABS TO CREATE A NEW BRIDGE WIDTH OF 26 FEET. NEW CONCRETE ABUTMENTS AND WINGWALLS WILL BE FORMED IN PLACE AND ASSOCIATED APPROACH WORK INCLUDES BRIDGE APPROACH SLABS AND NEW GUARDRAIL. ONCE THE BRIDGE IS COMPLETED, THE TEMPORARY BRIDGE AND ITS APPROACHES WILL BE REMOVED AND THE PROJECT AREA WILL BE RESTORED TO THE PREVIOUS CONDITIONS.

NOTE: AREA OF DISTURBANCE INCLUDES LIMITS OF EARTH DISTURBANCE WITHIN THE PROJECT AREA, AS WELL AS WASTE, BORROW AND STAGING AREAS, AND OTHER EARTH DISTURBING ACTIVITIES WITHIN OR DIRECTLY ADJACENT TO THE PROJECT LIMITS AS SHOWN ON THE ATTACHED EPSC PLAN.

TOTAL AREA OF DISTURBANCE AS SHOWN ON THE ATTACHED EPSC PLAN IS APPROXIMATELY 0.55 ACRES.

IT IS ANTICIPATED THAT THIS PROJECT WILL LAST ONE CONSTRUCTION SEASON.

1.2 SITE INVENTORY

1.2.1 TOPOGRAPHY
THE ROAD IN THIS PROJECT AREA IS GENERALLY FLAT AND FOLLOWS THE LAY OF THE SURROUNDING TOPOGRAPHY. THERE IS A PRIVATE GRAVEL ROAD (REGINA VISTA) THAT RUNS ALONG THE SOUTHWEST SIDE OF THE RIVER. THERE ARE 2 RESIDENCES ON EITHER END OF THE BRIDGE WITH PROPERTY THAT WILL BE WITHIN THE PROJECT AREA.

1.2.2 DRAINAGE, WATERWAYS, BODIES OF WATER, AND PROXIMITY TO NATURAL OR MAN-MADE WATER FEATURES
HALLADAY BROOK IS LOCATED IN THE PROJECT AREA AND RUNS BETWEEN SUNSET LAKE AND REGINA VISTA ROAD BEFORE PASSING UNDER SUNSET LAKE ROAD. TWO MAINTAINED ORNAMENTAL PONDS ARE LOCATED WITHIN THE PROJECT INVESTIGATION AREA ON A RESIDENTIAL PROPERTY; EACH ARE MAPPED BY THE VERMONT STATE WETLAND INVENTORY AS CLASS II WETLANDS. HALLADAY BROOK GENERALLY CONSISTS OF COBBLES AND GRAVEL WITH OCCASIONAL BOULDERS. ON THE UPSTREAM SIDE OF SUNSET LAKE ROAD BRIDGE, THE EAST BANK OF THE STREAM IS VEGETATED AND RELATIVELY FLAT PROVIDING ADJACENT FLOOD STORAGE, WHILE THE WESTERN BANK IS PARTIALLY CUT AND STEEP BEFORE TRANSITIONING INTO A FORESTED BUFFER. DOWNSTREAM FROM SUNSET LAKE ROAD BRIDGE, THE EASTERN BANK IS VEGETATED FOR APPROXIMATELY 20 FEET BEFORE TRANSITIONING INTO A MAINTAINED FIELD, AND THE WESTERN BANK CONSISTS OF A MAINTAINED RESIDENTIAL LAWN WITH STRUCTURES LOCATED NEAR THE STREAM.

1.2.3 VEGETATION
THE VEGETATION IN THE PROJECT AREA CONSISTS OF SPECKLED ALDER, YELLOW BIRCH, REED CANARY GRASS, AND GRASSED LAWN AREAS. UPON PROJECT COMPLETION, THE CHANNEL WILL BE ARMORED WITH STONE FILL TYPE III AS SPECIFIED ON THE PLANS. DISTURBED VEGETATION WILL BE REESTABLISHED WITH STANDARD SEED AND MULCH PRACTICES.

1.2.4 SOILS
ALL SOIL DATA CAME FROM THE U.S. DEPARTMENT OF AGRICULTURE SOIL CONSERVATION SERVICE FOR THE COUNTY OF WINDSOR, VERMONT. SOILS ON THE PROJECT SITE ARE PODUNK FINE SANDY LOAM AND DEERFIELD FINE SANDY LOAM, 2% TO 8% SLOPES, “K FACTOR” = 0.24. THE SOIL IS CONSIDERED MODERATELY ERODIBLE.

NOTE: K-VALUES GENERALLY INDICATE THE FOLLOWING:
0.0-0.23 = LOW EROSION POTENTIAL
0.24-0.36 = MODERATE EROSION POTENTIAL
0.37 AND HIGHER = HIGH EROSION POTENTIAL

1.2.5 SENSITIVE RESOURCE AREAS
CRITICAL HABITATS: NO
HISTORICAL OR ARCHEOLOGICAL AREAS: NO
PRIME AGRICULTURAL LAND: NO
THREATENED AND ENDANGERED SPECIES: NO
WATER RESOURCE: HALLADAY BROOK
WETLANDS: THERE ARE TWO CLASS II WETLAND FEATURES MAPPED BY THE VERMONT STATE WETLAND INVENTORY WITHIN THE PROJECT INVESTIGATION AREA. A FIELD INVESTIGATION DETERMINED THAT THESE WERE ORNAMENTAL PONDS.

1.3 RISK EVALUATION

THIS PROJECT DOES NOT FALL UNDER THE JURISDICTION OF GENERAL PERMIT 3-9020 FOR STORM-WATER RUNOFF FROM CONSTRUCTION SITES. SHOULD CHANGES PRIOR TO OR DURING CONSTRUCTION RESULT IN ONE OR MORE ACRES OF EARTH DISTURBANCE OR SHOULD THE PROJECT BECOME PART OF A LARGER PLAN OF DEVELOPMENT, THE CONTRACTOR WILL BE RESPONSIBLE FOR ANY ADDITIONAL PERMITTING.

1.4 EROSION PREVENTION AND SEDIMENT CONTROL

THE EROSION CONTROL PLANS ARE MEANT AS A GUIDELINE FOR PREVENTING EROSION AND CONTROLLING SEDIMENT TRANSPORT. THE PRINCIPLES OUTLINED IN THIS NARRATIVE CONSIST OF APPLYING MEASURES THROUGHOUT CONSTRUCTION OF THE PROJECT IN ORDER TO MINIMIZE SEDIMENT TRANSPORT TO THE RECEIVING WATERS. THE MEASURES INCLUDE STABILIZATION AND STRUCTURAL PRACTICES, STORM WATER CONTROLS AND OTHER POLLUTION PREVENTION PRACTICES. THEY HAVE BEEN PROPOSED BY THE DESIGNER AS A BASIS FOR PROTECTING RESOURCES AND WILL NEED TO BE BUILT UPON BASED ON THE SPECIFIC MEANS AND METHODS OF THE CONTRACTOR. REFER TO THE LOW RISK SITE HANDBOOK AND APPROPRIATE DETAIL SHEETS FOR SPECIFIC GUIDANCE AND CONSTRUCTION DETAILING.

ALL MEASURES SHALL BE REGULARLY MAINTAINED AND SHALL BE CHECKED FOR SEDIMENT BUILD-UP. SEDIMENT SHALL BE DISPOSED OF AT AN APPROVED SITE WHERE IT WILL NOT BE SUBJECT TO EROSION.

1.4.1 MARK SITE BOUNDARIES

SITE BOUNDARIES AND AREAS CONSTRUCTION EQUIPMENT CAN ACCESS SHALL BE DELINEATED.

PROJECT DEMARCATION FENCING (PDF) SHALL BE USED TO PHYSICALLY MARK SITE BOUNDARIES.

1.4.2 LIMIT DISTURBANCE AREA
PREVENTING INITIAL SOIL EROSION BY MINIMIZING THE EXPOSED AREA IS MUCH MORE EFFECTIVE THAN TREATING ERODED SEDIMENT. EARTH DISTURBANCE CAN BE MINIMIZED THROUGH CONSTRUCTION PHASING BY ONLY OPENING UP EARTH AS NECESSARY. THIS CAN LIMIT THE AREA THAT WILL BE DISTURBED AND EXPOSED TO EROSION. EMPLOY TEMPORARY CONSTRUCTION STABILIZATION PRACTICES IN INCREMENTAL STAGES AS PHASES CHANGE. FOR PROJECTS WHICH FALL UNDER THE CONSTRUCTION GENERAL PERMIT, ONLY THE ACREAGE LISTED ON THE PERMIT AUTHORIZATION MAY BE EXPOSED AT ANY GIVEN TIME.

MAINTAINING VEGETATED BUFFERS ALONG STREAM BANKS, WETLANDS OR OTHER SENSITIVE AREAS IS A CRUCIAL EROSION AND SEDIMENT CONTROL MEASURE THAT SHOULD BE ESTABLISHED WHEREVER POSSIBLE.

1.4.3 SITE ENTRANCE/EXIT STABILIZATION
TRACKING OF SEDIMENT ONTO PUBLIC HIGHWAYS SHALL BE MINIMIZED TO REDUCE THE POTENTIAL FOR RUNOFF ENTERING RECEIVING WATERS. INSTALLATION SHALL COINCIDE WITH THE PROGRESS SCHEDULE.

STABILIZED CONSTRUCTION ENTRANCES SHALL BE INSTALLED AS PROPOSED ON THE EPSC PLAN AND ANYWHERE EQUIPMENT WILL BE GOING FROM AREAS OF EXPOSED SOILS TO PAVED SURFACES.

1.4.4 INSTALL SEDIMENT BARRIERS
SEDIMENT BARRIERS SHALL BE UTILIZED TO INTERCEPT RUNOFF AND ALLOW SUSPENDED SEDIMENT TO SETTLE OUT. THEY SHALL BE INSTALLED PRIOR TO ANY UP SLOPE WORK.

SILT FENCE SHALL BE INSTALLED AS PROPOSED ON THE EPSC PLAN.

FILTER CURTAIN SHALL BE INSTALLED WHERE WORK MUST TAKE PLACE WITHIN THE LIMITS OF HALLADAY BROOK AS PROPOSED ON THE EPSC PLAN.

1.4.5 DIVERT UPLAND RUNOFF
DIVERSIONARY MEASURES SHALL BE USED TO INTERCEPT RUNOFF FROM ABOVE THE CONSTRUCTION AND DIRECT IT AROUND THE DISTURBED AREA SO THAT CLEAN WATER DOES NOT BECOME MUDDIED WHILE TRAVELING OVER EXPOSED SOILS ON THE CONSTRUCTION SITE.

THE PROJECT AREA IS RELATIVELY FLAT. THEREFORE IT IS NOT ANTICIPATED THAT DIVERSION MEASURES WILL BE NECESSARY.

1.4.6 SLOW DOWN CHANNELIZED RUNOFF
CHECK STRUCTURES SHALL BE UTILIZED TO REDUCE THE VELOCITY, AND THUS THE EROSIVE POTENTIAL, OF CONCENTRATED FLOW IN CHANNELS.

CHECK STRUCTURES SHALL BE INSTALLED AS SHOWN ON THE PLANS.

1.4.7 CONSTRUCT PERMANENT CONTROLS
PERMANENT STORM-WATER TREATMENT DEVICES SHALL BE INSTALLED AS SHOWN ON THE PLANS AND IN ACCORDANCE WITH PERMIT CONDITIONS.

PERMANENT EROSION CONTROL STRUCTURES ARE NOT ANTICIPATED FOR THIS PROJECT.

1.4.8 STABILIZE EXPOSED SOILS DURING CONSTRUCTION
ALL AREAS OF DISTURBANCE MUST HAVE TEMPORARY STABILIZATION IN PLACE WITHIN 48 HOURS OF DISTURBANCE OR IN ACCORDANCE WITH THE CONSTRUCTION GENERAL PERMIT 3-9020 AUTHORIZATION.

SURFACE ROUGHENING OF ALL EXPOSED SLOPES, COMBINED WITH TEMPORARY MULCHING, SHALL BE UTILIZED ON A REGULAR BASIS. BIODEGRADABLE EROSION CONTROL MATTING OR AN EQUIVALENT SHALL BE USED TO STABILIZE ALL SLOPES STEEPER THAN 1:3.

THE FORECAST OF RAINFALL EVENTS SHALL TRIGGER IMMEDIATE PROTECTION OF EXPOSED SOILS.

1.4.9 WINTER STABILIZATION
VARIOUS MEASURES SPECIFIC TO WINTER MAY BE NECESSARY SHOULD THE PROJECT EXTEND INTO WINTER (OCTOBER 15 THROUGH APRIL 15). REFER TO THE LOW RISK SITE HANDBOOK FOR GUIDANCE.

1.4.10 STABILIZE SOIL AT FINAL GRADE
EXPOSED SOIL MUST BE STABILIZED WITHIN 48 HOURS OF REACHING FINAL GRADE.

SEED, MULCH, FERTILIZER AND LIME SHALL BE USED TO ESTABLISH PERMANENT VEGETATION. FOR SLOPES STEEPER THAN 1:3, BIODEGRADABLE EROSION CONTROL MATTING OR AN EQUIVALENT SHALL BE USED INSTEAD OF MULCH.

1.4.11 DE-WATERING ACTIVITIES
DISCHARGE FROM DEWATERING ACTIVITIES THAT FLOWS OFF OF THE CONSTRUCTION SITE MUST NOT CAUSE OR CONTRIBUTE TO A VIOLATION OF THE VERMONT WATER QUALITY STANDARDS.

TREATMENT OF DEWATERING COFFERDAM IS ANTICIPATED. A LOCATION FOR TREATMENT HAS BEEN PROPOSED AND IS SHOWN ON THE PLANS. HOWEVER THE SPECIFIC MEANS FOR TREATMENT OF DISCHARGE SHALL BE PROVIDED BY THE CONTRACTOR.

1.4.12 INSPECT YOUR SITE
INSPECT THE PROJECT SITE BASED ON SPECIAL PROVISION REQUIREMENTS OR CONSTRUCTION GENERAL PERMIT AUTHORIZATION STIPULATIONS.

1.5 SEQUENCE AND STAGING

THIS SECTION WILL BE DEVELOPED BY THE CONTRACTOR USING THE GUIDANCE OUTLINED IN THE VTRANS EPSC PLAN CONTRACTOR CHECKLIST.

1.5.1 CONSTRUCTION SEQUENCE

1.5.2 OFF-SITE ACTIVITIES
IN ADDITION TO THE CONTRACTOR CHECKLIST ANY ACTIVITIES OUTSIDE THE CONSTRUCTION LIMITS SHALL FOLLOW SUBSECTIONS 105.25- 105.29 OF THE STANDARD SPECIFICATIONS FOR CONSTRUCTION.

VT STATE PLANE GRID

N

BEGIN APPROACH
STA. 101+35.00
MATCH EXISTING

BEGIN PROJECT
STA. 101+80.00

BEGIN BRIDGE
STA. 102+79.42
F.G. = 541.09

END BRIDGE
STA. 103+27.25
F.G. = 542.12

TH 12 STA. 103+14.37 =
CHANNEL STA. 11+51.06

END PROJECT
STA. 105+00.00

END APPROACH
STA. 105+45.00
MATCH EXISTING

TO JCT OF VT ROUTE 9

TO DUMMERSTON

SUNSET LAKE ROAD (TH 12)

100+00 101+00 102+00 103+00 104+00 105+00 106+00

10+00 11+00 12+00 13+00

TOWN R.O.W.

RIPARIAN BUFFER

CLASS 1 WETLAND BUFFER

REGINA VISTA (PRIVATE ROAD)

PRIVATE DRIVE (GRAVEL)

DRIVEWAY (GRAVEL)

DRIVEWAY (PAVED)

HALLADAY BROOK

IP W/METAL CAP

IP W/CAP C.T. MALY SURVEYORS

12" CGMP

18" CGMP

AER E&T

MHO

PROPERTY LINE

YANDOW, VALERY

ANGELL, SAMUEL H. & NANCIE SCHWARTZ

JEWETT- BELL, LYNDA F.

BM #1
NAIL IN POLE
EL. = 539.39'

BM #2
NAIL IN POLE
EL. = 544.63'

540 550

SOIL CLASSIFICATION

PODUNK FINE SANDY LOAM
DEERFIELD FINE SANDY LOAM
2% TO 8% SLOPES
"K FACTOR" 0.24
CLASSIFIED MODERATE EROSION POTENTIAL

SCALE 1" = 20'-0"
20 0 20

VHB Vanasse Hangen Brustlin, Inc.

PROJECT NAME: BRATTLEBORO	
PROJECT NUMBER: BRO 1442(35)	
FILE NAME: z10j062bdr_ero.dgn	PLOT DATE: 10/14/2013
PROJECT LEADER: S.E. BURBANK	DRAWN BY: E.A. FIALA
DESIGNED BY: E.A. FIALA	CHECKED BY: S.E. BURBANK
EPSC EXISTING CONDITIONS PLAN	SHEET 61 OF 68

VHB 57428

VT STATE PLANE GRID

N

BEGIN APPROACH
STA. 101+35.00
MATCH EXISTING

BEGIN PROJECT
STA. 101+80.00

BEGIN BRIDGE
STA. 102+79.42
F.G. = 541.09

STONE FILL, TYPE III

WETLAND BUFFER

DRIVEWAY (GRAVEL)

TEMPORARY PAVED APPRON

DETOUR

REGINA VISTA ROAD (PRIVATE ROAD)

TEMPORARY BRIDGE

PRIVATE DRIVE (GRAVEL)

RIPARIAN BUFFER

IP W/METAL CAP

HALLADAY BROOK

END APPROACH
STA. 105+45.00
MATCH EXISTING

END PROJECT
STA. 105+00.00

GRASS SWALE

FLOW

TOWN R.O.W.

GUY POLE

GUY

STONE FILL, TYPE III

TO JCT OF VT ROUTE 9

SUNSET LAKE ROAD (TH 12)

TO DUMMERSTON

TEMPORARY DRIVE

AER E&T

TEMP AER E&T

PDF

ARCH

BM #1
NAIL IN POLE
EL. = 539.39'

BM #2
NAIL IN POLE
EL. = 544.63'

END BRIDGE
STA. 103+27.25
F.G. = 542.12

TH 12 STA. 103+14.37 =
CHANNEL STA. 11+51.06

TEMPORARY MAILBOX

PROPERTY LINE

C. T. MALY SURVEYORS

100+00 101+00 1+00 102+00 2+00 3+00 4+00 4+37 105+00 10+00 104+00 106+00 15+00

530 540 550

SOIL CLASSIFICATION
PODUNK FINE SANDY LOAM
DEERFIELD FINE SANDY LOAM
2% TO 8% SLOPES
"K FACTOR" 0.24
CLASSIFIED MODERATE EROSION POTENTIAL

NOTE: SEE SHEET 11 FOR EPSC LAYOUT SYMBOLOGY LEGEND.

SCALE 1" = 20'-0"
20 0 20

Vanasse Hangen Brustlin, Inc.

PROJECT NAME: BRATTLEBORO	
PROJECT NUMBER: BRO 1442(35)	
FILE NAME: z10j062bdr_ero.dgn	PLOT DATE: 10/14/2013
PROJECT LEADER: S.E. BURBANK	DRAWN BY: E.A. FIALA
DESIGNED BY: E.A. FIALA	CHECKED BY: S.E. BURBANK
EPSC CONSTRUCTION CONDITIONS PLAN	SHEET 62 OF 68

VHB 57428

VT STATE PLANE GRID

N

STONE FILL, TYPE III

IP W/METAL CAP

RIPARIAN BUFFER

PRIVATE DRIVE (GRAVEL)

540

540

HALLADAY BROOK

540

BEGIN BRIDGE
STA. 102+79.42
F.G. = 541.09

DRIVEWAY (GRAVEL)

CLASS II WETLAND BUFFER

REGINA VISTA (PRIVATE ROAD)

IP W/METAL CAP

END APPROACH
STA. 105+45.00
MATCH EXISTING

BEGIN PROJECT
STA. 101+80.00

BEGIN APPROACH
STA. 101+35.00
MATCH EXISTING

540

12" CGMP

GRASS SWALE

540

540

10+00

END PROJECT
STA. 105+00.00

RIPARIAN BUFFER

TOWN R.O.W.

540

540

FLOW

R = 50.00

MHO

STONE FILL, TYPE III

TOWN R.O.W.

FLOW

TO JCT OF VT ROUTE 9

100+00

101+00

102+00

103+00

SUNSET LAKE ROAD (TH 12)

104+00

105+00

TO DUMMERSTON

106+00

AER E&T

AER E&T

AER E&T

AER E&T

AER E&T

AER E&T

AER E&T

TOWN R.O.W.

TOWN R.O.W.

TOWN R.O.W.

PAVED

12" CGMP

540

DRIVEWAY (PAVED)

18" CGMP

IP W/CAP
C.T. MALY
SURVEYORS

550

RIPARIAN BUFFER

13+00

BM #1
NAIL IN POLE
EL. = 539.39'

END BRIDGE
STA. 103+27.25
F.G. = 542.12

TH 12 STA. 103+14.37 =
CHANNEL STA. 11+51.06

BM #2
NAIL IN POLE
EL. = 544.63'

PROPERTY LINE

PROPERTY LINE

530

530

STONE FILL, TYPE III

RIPARIAN BUFFER

SOIL CLASSIFICATION

PODUNK FINE SANDY LOAM
DEERFIELD FINE SANDY LOAM
2% TO 8% SLOPES
"K FACTOR" 0.24
CLASSIFIED MODERATE EROSION POTENTIAL

NOTE: SEE SHEET 11 FOR EPSC LAYOUT SYMBOLOGY LEGEND.

SCALE 1" = 20'-0"
20 0 20

Vanasse Hangen Brustlin, Inc.

PROJECT NAME: BRATTLEBORO	
PROJECT NUMBER: BRO 1442(35)	
FILE NAME: z10j062bdr_ero.dgn	PLOT DATE: 10/14/2013
PROJECT LEADER: S.E. BURBANK	DRAWN BY: E.A. FIALA
DESIGNED BY: E.A. FIALA	CHECKED BY: S.E. BURBANK
EPSC FINAL CONDITIONS PLAN	SHEET 63 OF 68

VHB 57428

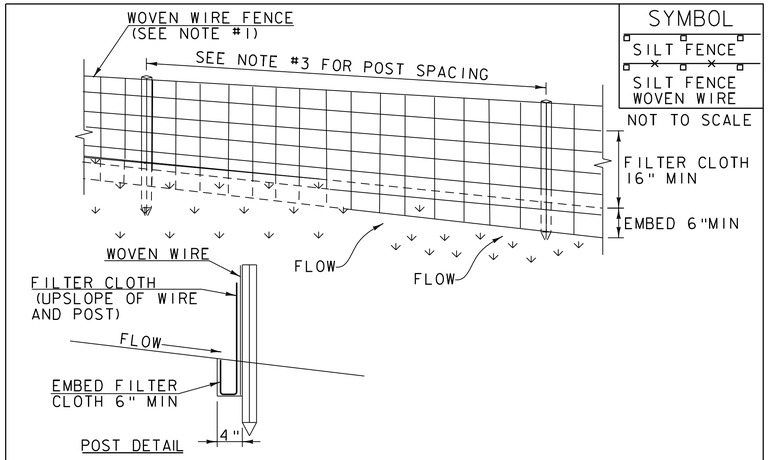

SYMBOL

SILT FENCE

SILT FENCE WOVEN WIRE

NOT TO SCALE

CONSTRUCTION SPECIFICATIONS

1. WOVEN WIRE REINFORCED FENCE IS REQUIRED WITHIN 100' UPSLOPE OF RECEIVING WATERS WHEN THE PROJECT FALLS UNDER A CONSTRUCTION STORMWATER PERMIT. WOVEN WIRE SHALL BE A MIN. 14 GAUGE WITH A 6" MAX. MESH OPENING.
2. FILTER CLOTH SHALL BE EITHER FILTER X, MIRAFI100X, STABILINKA T140N OR APPROVED EQUIVALENT.
3. POST SPACING FOR WIRE-BACKED FENCE SHALL BE 10' MAXIMUM. FOR FILTER-CLOTH FENCE, WHEN ELONGATION IS >50%, POST SPACING SHALL NOT EXCEED 4' AND WHEN ELONGATION IS <50%, POST SPACING SHALL NOT EXCEED 6'.
4. WOVEN WIRE FENCE IS TO BE FASTENED SECURELY TO FENCE POSTS WITH WIRE TIES. FILTER CLOTH IS TO BE FASTENED SECURELY TO WOVEN WIRE FENCE WITH TIES SPACED EVERY 24" AT TOP AND MID SECTION.
5. WHEN TWO SECTIONS OF FILTER CLOTH ADJOIN EACH OTHER THEY SHALL BE OVER-LAPPED BY 6" AND FOLDED.
6. MAINTENANCE SHALL BE PERFORMED AS NEEDED AND MATERIAL REMOVED WHEN SEDIMENT REACHES HALF OF FABRIC HEIGHT.

ADAPTED FROM DETAILS PROVIDED BY: NEW YORK STATE DEC
ORIGINALLY DEVELOPED BY USDA-NRCS
VERMONT DEPARTMENT OF ENVIRONMENTAL CONSERVATION

SILT FENCE

NOTES:
REFER TO "THE VERMONT STANDARDS & SPECIFICATIONS FOR EROSION PREVENTION & SEDIMENT CONTROL -2006- " FROM THE VT AGENCY OF NATURAL RESOURCES FOR ADDITIONAL GUIDANCE.

THIS WORK SHALL BE PERFORMED IN ACCORDANCE WITH SECTION 649 AND AS SHOWN IN THE PLANS FOR GEOTEXTILE FOR SILT FENCE (PAY ITEM 649.51) OR GEOTEXTILE FOR SILT FENCE, WOVEN WIRE REINFORCED (PAY ITEM 649.515).

REVISIONS	
MARCH 21, 2008	WHF
DECEMBER 11, 2008	WHF
JANUARY 13, 2009	WHF

VAOT RURAL AREA MIX

	LBS/AC				
% WEIGHT	BROADCAST	HYDROSEED	NAME	GERM %	PURITY %
37.5%	22.5	45	CREEPING RED FESCUE	85%	98%
37.5%	22.5	45	TALL FESCUE	90%	95%
5.0%	3	6	RED TOP	90%	95%
15.0%	9	18	BIRDSFOOT TREFOIL	85%	98%
5.0%	3	6	ANNUAL RYE GRASS	85%	95%
100%	60	120			

VAOT URBAN AREA MIX

	LBS/AC				
% WEIGHT	BROADCAST	HYDROSEED	NAME	GERM %	PURITY %
42.5%	34	68	CREEPING RED FESCUE	85%	98%
10.0%	8	16	PERENNIAL RYE GRASS	90%	95%
42.5%	34	68	KENTUCKY BLUE GRASS	85%	85%
5.0%	4	8	ANNUAL RYE GRASS	85%	95%
100%	80	160			

SOIL AMENDMENT GUIDANCE

FERTILIZER		LIME	
BROADCAST	HYDROSEED	BROADCAST	HYDROSEED
10-20-10	*FOLLOW*	PELLETIZED	*FOLLOW*
500 LBS/AC	*MANUFACTURER*	2 TONS/AC	*MANUFACTURER*

CONSTRUCTION GUIDANCE

1. RURAL SEED MIX: USE AS INDICATED IN THE PLANS AND/OR FOR ALL ESTABLISHED UPLAND (NON WETLAND) AREAS DISTURBED BY THE CONTRACTOR.
2. URBAN SEED MIX: USE AS INDICATED IN THE PLANS AND/OR FOR ALL ESTABLISHED LAWN AREAS DISTURBED BY THE CONTRACTOR.
3. ALL SEED MIXTURES: SHALL NOT HAVE A WEED CONTENT EXCEEDING 0.40% BY WEIGHT AND SHALL BE FREE OF ALL NOXIOUS SEED.
4. FERTILIZER AND LIMESTONE: SHALL FOLLOW RATES SHOWN ON PLAN OR AS DIRECTED BY THE ENGINEER
5. HAY MULCH: TO BE PLACED ON EARTH SLOPES AT THE RATE OF 2 TONS/ACRE, ACHIEVE 90% GROUND COVER OR AS DIRECTED BY THE ENGINEER.
6. TOPSOIL: TO BE USED WITH SEED AS INDICATED ON THE PLANS, OR AS DIRECTED BY THE ENGINEER.
7. HYDROSEEDING: ALTHOUGH GUIDANCE IS GIVEN ABOVE THE SITE CONDITIONS AND THE TYPE OF HYDROSEED WILL ULTIMATELY DICTATE THE AMOUNTS AND TYPES OF SOIL AMENDMENTS TO BE APPLIED
8. TURF ESTABLISHMENT: PLACING SEED, FERTILIZER, LIME AND MULCH PRIOR TO SEPTEMBER 15 AND AFTER APRIL 15 CAN BETTER ENSURE A VIGOROUS GROWTH OF GRASS.

ADAPTED FROM VTRANS TECHNICAL LANDSCAPE MANUAL FOR ROADWAYS AND TRANSPORTATION FACILITIES

TURF ESTABLISHMENT

REVISIONS	
JUNE 23, 2009	WHF
JANUARY 15, 2010	WHF
FEBRUARY 16, 2011	WHF

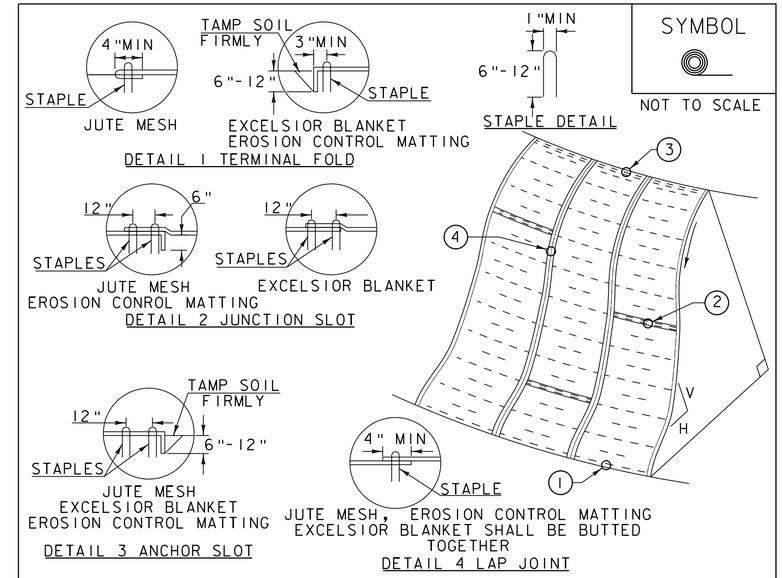

SYMBOL

NOT TO SCALE

CONSTRUCTION SPECIFICATIONS

1. APPLY TO SLOPES GREATER THAN 3H:1V OR WHERE NECESSARY TO AID IN ESTABLISHING VEGETATION.
2. APPLY FERTILIZER, LIME SEED PRIOR TO PLACING MATTING.
3. STAPLES ARE TO BE PLACED ALTERNATELY, IN COLUMNS APPROXIMATELY 2' APART AND IN ROWS APPROXIMATELY 3' APART. APPROXIMATELY 175 STAPLES ARE REQUIRED PER 4'X225' ROLL OF MATERIAL AND 125 STAPLES ARE REQUIRED PER 4'X150' ROLL OF MATERIAL.
4. DISTURBED AREAS SHALL BE SMOOTHLY GRADED. EROSION CONTROL MATERIAL SHALL BE PLACED LOOSELY OVER GROUND SURFACE. DO NOT STRETCH.
5. ALL TERMINAL ENDS AND TRANSVERSE LAPS SHALL BE STAPLED AT APPROXIMATELY 12" INTERVALS.

ADAPTED FROM DETAILS PROVIDED BY: NEW YORK STATE DEC
ORIGINALLY DEVELOPED BY USDA-NRCS
VERMONT DEPARTMENT OF ENVIRONMENTAL CONSERVATION

ROLLED EROSION CONTROL PRODUCT (RECP) SIDE SLOPE

NOTES:
REFER TO "THE VERMONT STANDARDS & SPECIFICATIONS FOR EROSION PREVENTION & SEDIMENT CONTROL -2006- " FROM THE VT AGENCY OF NATURAL RESOURCES FOR ADDITIONAL GUIDANCE.
THIS WORK SHALL BE PERFORMED IN ACCORDANCE WITH SECTION 653 AND AS SHOWN IN THE PLANS FOR TEMPORARY EROSION MATTING (PAY ITEM 653.20) OR PERMANENT EROSION MATTING (PAY ITEM 653.21).

REVISIONS	
APRIL 16, 2007	JMF
JANUARY 13, 2009	WHF

VHB Vanasse Hangen Brustlin, Inc.

PROJECT NAME: BRATTLEBORO
PROJECT NUMBER: BRO 1442(35)

FILE NAME: z10j062details ero.dgn
PROJECT LEADER: S.E. BURBANK
DESIGNED BY: VTRANS
EROSION CONTROL DETAILS (1 OF 3)

PLOT DATE: 10/14/2013
DRAWN BY: E.A. FIALA
CHECKED BY: S.E. BURBANK
SHEET 64 OF 68

VHB 57428

SYMBOL

NOT TO SCALE

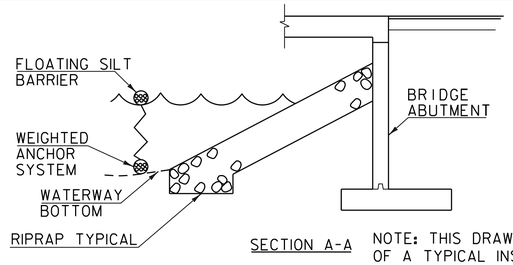

SECTION A-A

NOTE: THIS DRAWING IS A DEPICTION OF A TYPICAL INSTALLATION OF FILTER CURTAIN. IT IN NO WAY DEFINES THE TYPE OR USE OF COFFERDAM IF USED.

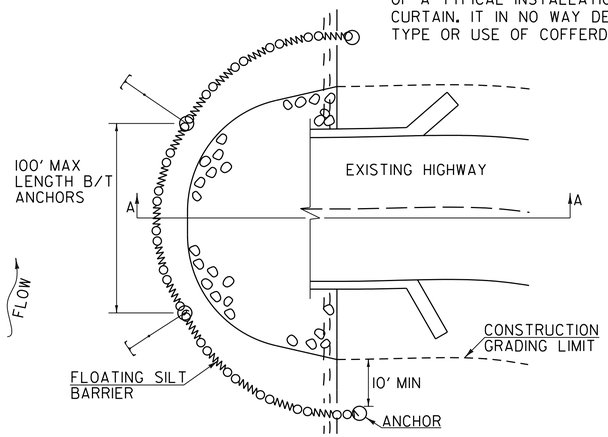

CONSTRUCTION SPECIFICATIONS

1. FILTER CURTAIN SHALL NOT BE PLACED ACROSS A FLOWING WATERWAY, OR IN A WATERWAY WITH STREAM VELOCITIES GREATER THAN 1.5 FEET/SECOND.
2. MAXIMUM 100' LENGTH BETWEEN ANCHORS.
3. LAST SECTION SHALL TERMINATE A MINIMUM OF 10' BEYOND LIMIT OF DISTURBANCE.
4. THE WEIGHTED ANCHOR SYSTEM SHALL BE A TYPE WHICH ALLOWS THE CURTAIN TO CONFORM TO THE BOTTOM OF THE WATERWAY.
5. THE CURTAIN SHALL BE REMOVED BY SLOWLY PULLING TOWARD THE SHORE MINIMIZING THE ESCAPE OF SEDIMENTS INTO WATERWAY.

FILTER CURTAIN

THIS WORK SHALL BE PERFORMED IN ACCORDANCE WITH SECTION 649 FOR GEOTEXTILE FOR FILTER CURTAIN (PAY ITEM 649.61).

REVISIONS	
APRIL 1, 2008	WHF
JANUARY 13, 2009	WHF
SEPTEMBER 4, 2009	WHF

SYMBOL

NOT TO SCALE

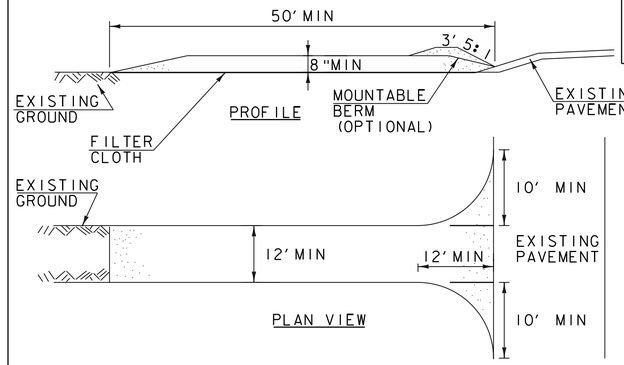

CONSTRUCTION SPECIFICATIONS

1. STONE SIZE- USE 1-4" STONE, RECLAIMED OR RECYCLED CONCRETE EQUIVALENT.
2. LENGTH- NOT LESS THAN 50' (EXCEPT ON A SINGLE RESIDENCE LOT WHERE A 30' MINIMUM LENGTH APPLIES).
3. THICKNESS- NOT LESS THAN 8".
4. WIDTH- 12' MINIMUM, BUT NOT LESS THAN THE FULL WIDTH AT POINTS WHERE INGRESS OR EGRESS OCCURS. 24' IF SINGLE ENTRANCE TO SITE.
5. GEOTEXTILE MUST BE PLACED OVER THE ENTIRE AREA PRIOR TO PLACING STONE.
6. SURFACE WATER- ALL SURFACE WATER FLOWING OR DIVERTED TOWARD CONSTRUCTION ENTRANCES SHALL BE PIPED BENEATH THE ENTRANCE. IF PIPING IS IMPRACTICAL, A MOUNTABLE BERM WITH 5:1 SLOPES WILL BE PERMITTED.
7. MAINTENANCE- THE ENTRANCE SHALL BE MAINTAINED IN A CONDITION WHICH WILL PREVENT TRACKING OR FLOWING OF SEDIMENT ONTO PUBLIC RIGHTS-OF-WAY, ALL SEDIMENT SPILLED, DROPPED, WASHED OR TRACKED ONTO PUBLIC RIGHTS-OF-WAY MUST BE REMOVED IMMEDIATELY.
8. WHEN WASHING IS REQUIRED, IT SHALL BE DONE ON AN AREA STABILIZED WITH STONE AND WHICH DRAINS INTO AN APPROVED SEDIMENT TRAPPING DEVICE.
9. PERIODIC INSPECTION AND NEEDED MAINTENANCE SHALL BE PROVIDED ACCORDING TO PERMIT REQUIREMENTS.

ADAPTED FROM DETAILS PROVIDED BY: NEW YORK STATE DEC
ORIGINALLY DEVELOPED BY USDA-NRCS
VERMONT DEPARTMENT OF ENVIRONMENTAL CONSERVATION

STABILIZED CONSTRUCTION ENTRANCE

NOTES:
REFER TO "THE VERMONT STANDARDS & SPECIFICATIONS FOR EROSION PREVENTION & SEDIMENT CONTROL -2006- " FROM THE VT AGENCY OF NATURAL RESOURCES FOR ADDITIONAL GUIDANCE.

THIS WORK SHALL BE PERFORMED IN ACCORDANCE WITH SECTION 653 FOR VEHICLE TRACKING PAD (PAY ITEM 653.35) OR AS SPECIFIED IN THE CONTRACT.

REVISIONS	
MARCH 24, 2008	WHF
JANUARY 13, 2009	WHF

SYMBOL

NOT TO SCALE

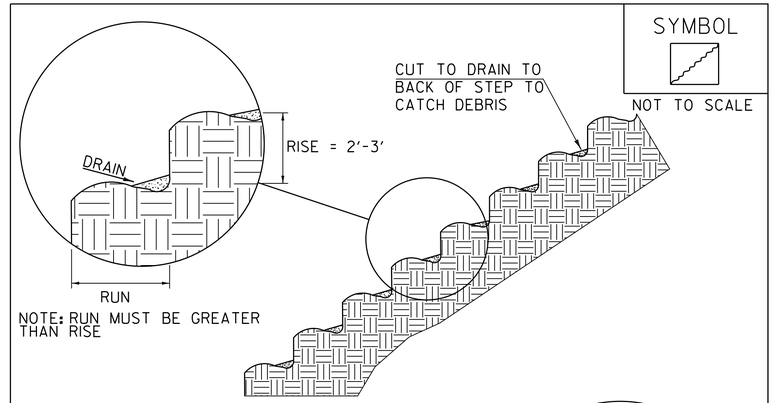

NOTE: RUN MUST BE GREATER THAN RISE

STAIR STEPPING CUT SLOPES

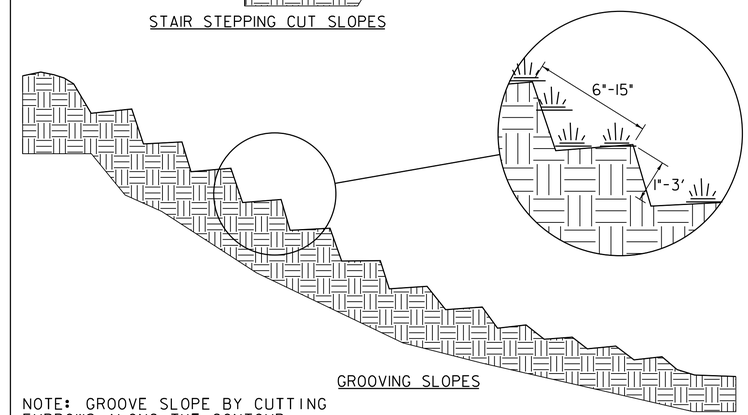

GROOVING SLOPES

NOTE: GROOVE SLOPE BY CUTTING FURROWS ALONG THE CONTOUR. IRREGULARITIES IN THE SOIL SURFACE CATCH RAINWATER AND RETAIN LIME, FERTILIZER AND SEED.

ADAPTED FROM DETAILS PROVIDED BY: NEW YORK STATE DEC
ORIGINALLY DEVELOPED BY USDA-NRCS
VERMONT DEPARTMENT OF ENVIRONMENTAL CONSERVATION

SURFACE ROUGHENING

NOTES:
REFER TO "THE VERMONT STANDARDS & SPECIFICATIONS FOR EROSION PREVENTION & SEDIMENT CONTROL -2006- " FROM THE VT AGENCY OF NATURAL RESOURCES FOR ADDITIONAL GUIDANCE.

THIS WORK SHALL BE CONSIDERED INCIDENTAL TO THE CONTRACT

REVISIONS	
APRIL 1, 2008	WHF
JANUARY 13, 2009	WHF

Vanasse Hangen Brustlin, Inc.

PROJECT NAME:	BRATTLEBORO
PROJECT NUMBER:	BRO 1442(35)

FILE NAME: z10j062details ero.dgn	PLOT DATE: 10/14/2013
PROJECT LEADER: S.E. BURBANK	DRAWN BY: E.A. FIALA
DESIGNED BY: VTRANS	CHECKED BY: S.E. BURBANK
EROSION CONTROL DETAILS (2 OF 3)	SHEET 65 OF 68

VHB 57428

SYMBOL

NOT TO SCALE

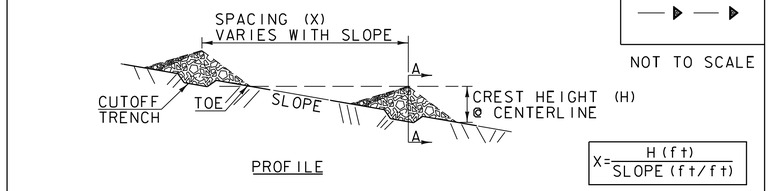

PROFILE

$$X = \frac{H\,(ft)}{SLOPE\,(ft/ft)}$$

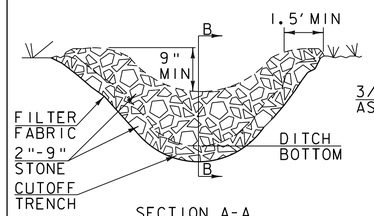

SECTION A-A

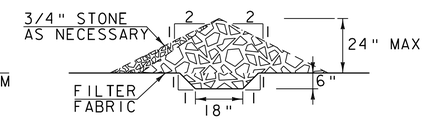

SECTION B-B

CONSTRUCTION SPECIFICATIONS

1. STONE WILL BE PLACED ON A FILTER FABRIC FOUNDATION.
2. CHECK DAMS SHALL BE SPACED SO THAT THE ELEVATION OF THE CREST OFTHE DOWNSTREAM DAM IS AT THE SAME ELEVATION AS THE TOE OF THE UPSTREAM DAM.
3. 3/4" FILTERING STONE MAY BE ADDED TO THE FACE OF THE CHECK DAM AS NECESSARY.
4. EXTEND THE STONE A MINIMUM OF 1.5' BEYOND THE DITCH BANKS TO PREVENT CUTTING AROUND THE DAM.
5. PROTECT CHANNEL DOWNSTREAM OF THE LOWEST CHECK DAM FROM SCOUR AND EROSION WITH STONE OR LINER AS APPROPRIATE.
6. ENSURE THAT CHANNEL APPURTENANCES SUCH AS CULVERT ENTRANCES BELOW CHECK DAMS ARE NOT SUBJECT TO DAMAGE OR BLOCKAGE FROM DISPLACED STONE.
7. MAXIMUM DRAINAGE AREA 2 ACRES.

ADAPTED FROM DETAILS PROVIDED BY: NEW YORK STATE DEC
ORIGINALLY DEVELOPED BY USDA-NRCS
VERMONT DEPARTMENT OF ENVIRONMENTAL CONSERVATION

CHECK DAM

NOTES:
REFER TO "THE VERMONT STANDARDS & SPECIFICATIONS FOR EROSION PREVENTION & SEDIMENT CONTROL -2006- " FROM THE VT AGENCY OF NATURAL RESOURCES FOR ADDITIONAL GUIDANCE.

THIS WORK SHALL BE PERFORMED IN ACCORDANCE WITH SECTION 653 FOR TEMPORARY STONE CHECK DAM, TYPE I (PAY ITEM 653.25)

REVISIONS	
MARCH 21, 2008	WHF
JANUARY 8, 2009	WHF

Vanasse Hangen Brustlin, Inc.

PROJECT NAME: BRATTLEBORO
PROJECT NUMBER: BRO 1442(35)

FILE NAME: z10j062details ero.dgn
PROJECT LEADER: S.E. BURBANK
DESIGNED BY: VTRANS
EROSION CONTROL DETAILS (3 OF 3)

PLOT DATE: 10/14/2013
DRAWN BY: E.A. FIALA
CHECKED BY: S.E. BURBANK
SHEET 66 OF 68

VHB 57428

STATE OF VERMONT
AGENCY OF TRANSPORTATION

RIGHT - OF - WAY DETAIL SHEET

TABLE OF PROPERTY ACQUISITION

PARCEL NO.	PROPERTY OWNER	ROW LAYOUT NO.	BEGINNING STATION	ENDING STATION	TAKE AREA±	REMAINDER AREA±	RIGHT TYPE	RIGHT T / P	RIGHT AREA ±	RECORDING DATA TITLE	RECORDING DATA DATE	RECORDING DATA TOWN / CITY	RECORDING DATA BOOK	RECORDING DATA PAGE	REMARKS
1	REDHILLS LLC	1	102+31 LT	104+09 LT			DETOUR	T	5,218 SF	WDOE		BRATTLEBORO			INCL. PDF, EC, TRAFFIC CONTROL DEVICES, SIGNS
			102+92 LT	103+34 LT			INSTALL	T							GUARD RAIL
			102+94 LT	103+38 LT			CHANNEL	P	308 SF						INCL. STONE FILL
			102+96 LT	103+04 LT			INSTALL & MAINTAIN	P	13 SF						BRIDGE FOOTING
			103+02 LT				REMOVE & RESET	T							STONE BOULDER
			103+04 LT	103+07 LT			INSTALL	T							COFFER DAM
			103+05 LT				INSTALL	T							TRAFFIC CONTROL DEVICES
			103+38 LT	104+01 LT			LANDSCAPE	T	680 SF						PLANT TREES & SHRUBS
			103+52 LT	103+85 LT			INSTALL	T							SIGNS
			103+69 LT				INSTALL	T							TRAFFIC CONTROL DEVICES
2	YANDOW, VALERY W.	1	100+95 LT	101+02 LT			INSTALL	T		GTR		BRATTLEBORO			GUY WIRE & ANCHOR
			103+00 LT				INSTALL	T							SIGN
			103+05 LT				INSTALL	T							TRAFFIC CONTROL DEVICES
3	ANGELL, SAMUEL H. &	1	100+96 RT	101+82 RT			UTILITY	T		GTR		BRATTLEBORO			
	ANGELL, NANCIE SCHWARTZ		101+34 RT												W-1 MONITOR WELL
			101+81 RT	102+40 RT			CONST.	T	201 SF						INCLUDES PDF & EC
			101+90 RT	102+17 RT			SLOPE	T	68 SF						
			102+41 RT	102+58 RT			INSTALL	T							EC
			102+43 RT	102+45 RT			SLOPE	T	1 SF						
			102+52 RT	102+69 RT			INSTALL	T							EC
4	BELL, DAVID F. &	1	101+82 RT	104+53 RT			UTILITY	T		WDOE		BRATTLEBORO			
	JEWETT-BELL, LYNDA F.		102+51 RT	103+08 RT			CONST.	T	154 SF						INCLUDES PDF & EC
			102+57 RT	102+80 RT			SLOPE	T	158 SF						
			102+73 RT	102+99 RT			CHANNEL	P	203 SF						INCLUDES STONE FILL
			102+80 RT	103+05 RT			SLOPE	T	110 SF						
			103+33 RT	103+46 RT			CONST.	T	155 SF						INCLUDES PDF & EC
			103+38 RT	103+88 RT			DRIVE	T	1370 SF						12' PAVED
			103+46 RT	104+66 RT			ACCESS	T							
			103+56 RT	104+36 RT			CONST.	T	267 SF						INCLUDES PDF & EC
5	YANDOW, VALERY W.	1	103+33 LT	104+08 LT			LANDSCAPE	T	108 SF	GTR		BRATTLEBORO			PLANT TREES & SHRUBS
			103+25 LT	104+80 LT			DETOUR	T	2,090 SF						INCL. PDF, EC & TRAFFIC DEVICES
			103+97 LT	104+27 LT			SLOPE	T	25 SF						
			103+97 LT	104+64 LT			LANDSCAPE	T	473 SF						PLANT TREES & SHRUBS
			104+72 LT	104+77 LT			SLOPE	T	3 SF						
			104+87 LT	104+89.02 LT			INSTALL	T							GUY WIRE, ANCHOR & POLE
6	GREEN MOUNTAIN POWER	1	100+96.02 RT	104+86.57 RT											UTILITY EASEMENTS
	CORPORATION														
7	TELEPHONE OPERATING COMPANY	1	100+96.02 RT	104+86.57 RT											UTILITY EASEMENTS
	OF VERMONT LLC														

TABLE OF REVISIONS

REVISION NO.	ROW SET SHEET #	DESCRIPTION	DATE
1	12, 13	PARCEL 5, YANDOW - REVISED	07/22/13
		LANDSCAPE SHEETS. C.O. #9816	
		COMPLETED BY: MT APPROVED BY: HP	

APPROVED: HARRY PETROVS DATE: 02-26-13
CHIEF, PLANS & TITLES

PROJECT NAME: **BRATTLEBORO**
PROJECT NUMBER: **BRO 1442(35)**

FILE NAME: **r10j062_detail.xls**
PROJECT LEADER: **M. CHENETTE**
DESIGNED BY: **VHB**
R.O.W. DETAIL SHEET #1

PLOT DATE: 10/14/2013
DRAWN BY: **M. TROTTIER**
CHECKED BY: **B. FERLAZO**
SHEET 67 OF 68

VT STATE PLANE GRID

N

CONSTRUCT 11.5' PAVED APRON
STA. 102+69, LT - 41.5' WIDE

CONSTRUCT 12' PAVED DRIVE
STA. 103+59, RT - 12' WIDE

REMOVAL AND DISPOSAL OF GUARDRAIL
STA. 102+43 - 102+73, RT
STA. 102+92 - 102+96, LT
STA. 103+03 - 103+27, RT
STA. 103+31 - 104+46, LT

COLD PLANING, BITUMINOUS PAVEMENT
STA. 101+35 - 101+55, LT & RT
STA. 105+25 - 105+45, LT & RT

SPECIAL PROVISION (BRIDGE RAILING, GALVANIZED HDSB/FASCIA MOUNTED/STEEL TUBING)
STA. 102+43 - 103+25, RT
STA. 102+88 - 103+08, LT

GUARDRAIL APPROACH SECTION, GALVANIZED HD STEEL BEAM W/8 FEET POSTS
STA. 102+18 - 102+43, RT
STA. 102+92, 24.58' LT - 102+88, LT
STA. 104+08 - 104+33, LT

RELOCATE MAILBOX, MULTIPLE SUPPORT
STA. 102+39, RT

RELOCATE MAILBOX, SINGLE SUPPORT
STA. 103+83, RT

STEEL BEAM GUARDRAIL, GALVANIZED W/8 FEET POSTS
STA. 102+12 - 102+18, RT
STA. 102+92, 24.58' LT - 103+20, 38.4' LT
STA. 104+33 - 104+63, LT

ANCHOR FOR STEEL BEAM RAIL
STA. 102+06, RT
STA. 103+25, 40.75' LT
STA. 103+30, RT
STA. 104+69, LT

STEEL BEAM GUARDRAIL, GALV.
STA. 102+00 - 102+12, RT
STA. 103+20, 38.4' LT - 103+34, 44.5' LT
STA. 103+25 - 103+36, RT
STA. 104+63 - 104+76, LT

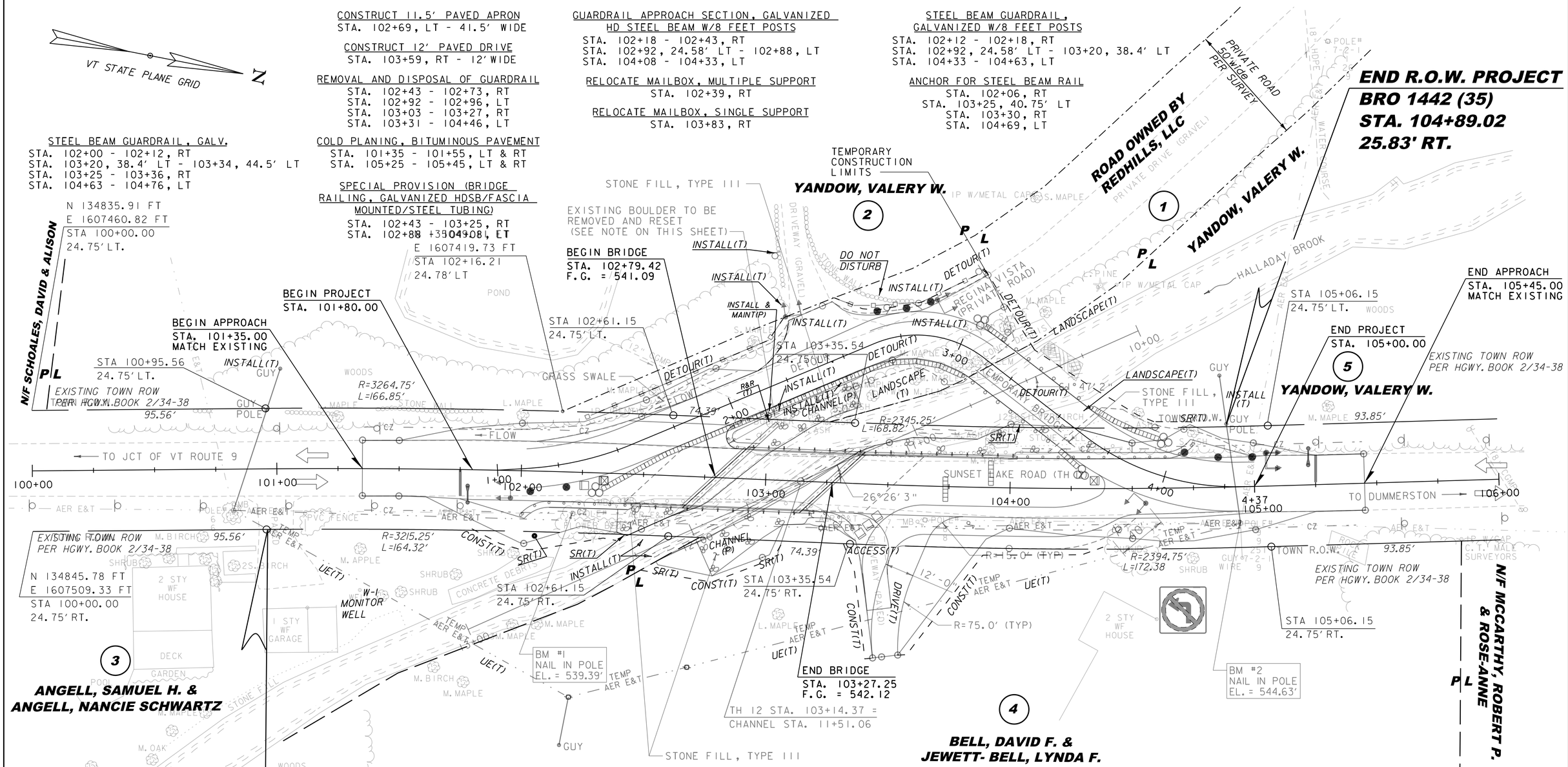

EDGE OF PAVEMENT WIDTH TRANSITION
STA. 101+55 = MATCH EXISTING LT & RT
STA. 101+80 = 12'-2" LT & RT
STA. 104+72 = 12'-2" RT
STA. 104+97 = 12'-2" LT
STA. 105+05 = MATCH EXISTING LT & RT

NOTE:

1. EXISTING BOULDER ALONG REGINA VISTA (T.H. 12 STA. 103+02, 23.83' LT) SHALL BE REMOVED AND RESET. BOULDER SHALL BE LOCATED BEHIND THE GUARDRAIL SO AS TO PROVIDE A MINIMUM OF 4'-0" CLEAR ZONE BETWEEN THE BOULDER AND THE FRONT OF GUARDRAIL. ALL COSTS FOR PROPERLY REMOVING, STORING AND RESETTING THE BOULDER WILL BE INCIDENTAL TO ALL CONTRACT ITEMS.

SCALE 1" = 20'-0"
20 0 20

FOR R.O.W. USE ONLY

LINES SHOWN ON THIS PLAN AS EXISTING PROPERTY LINES P/L ARE BELIEVED TO BE ACCURATE BUT SHOULD NOT BE RELIED UPON FOR PURPOSES UNRELATED TO THE STATE OF VERMONT'S ACQUISITION OF LAND AND RIGHTS FOR THIS PROJECT.

PROJECT NAME: BRATTLEBORO	
PROJECT NUMBER: BRO 1442(35)	
FILE NAME: NAME$DGN	PLOT DATE: 10/14/2013
PROJECT LEADER: M. CHANETTE	DRAWN BY: B. FERLAZO
DESIGNED BY: S.E. BURBANK	CHECKED BY: H. PETROVS
ROW LAYOUT SHEET 1 OF 1	SHEET 68 OF 68

CONCRETE GENERAL NOTES

1. ALL EXPOSED EDGES OF CONCRETE SHALL BE CHAMFERED 1" x 1"

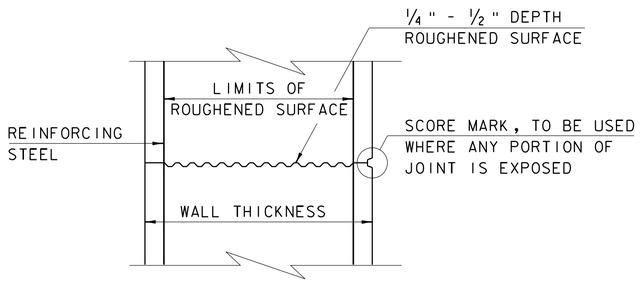

TYPICAL HORIZONTAL CONSTRUCTION JOINT
(NOT TO SCALE)

1. THE SURFACE OF THE CONCRETE CONSTRUCTION JOINTS SHALL BE CLEANED AND FREE OF LAITANCE.

2. IMMEDIATELY BEFORE NEW CONCRETE IS PLACED, ALL CONSTRUCTION JOINTS SHALL BE WETTED AND STANDING WATER REMOVED.

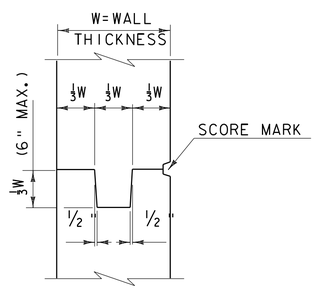

TYPICAL CONCRETE CONSTRUCTION JOINT
(NOT TO SCALE)

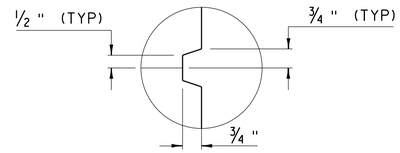

SCORE MARK DETAIL
(NOT TO SCALE)

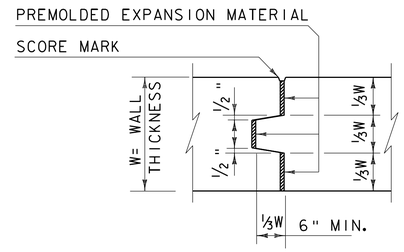

TYPICAL CONCRETE EXPANSION JOINT
(NOT TO SCALE)

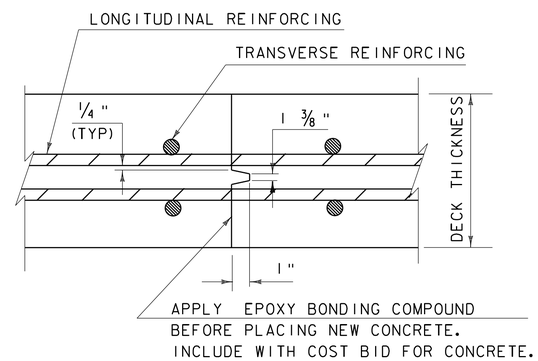

TRANSVERSE BRIDGE SLAB CONSTRUCTION JOINT DETAILS
(NOT TO SCALE)

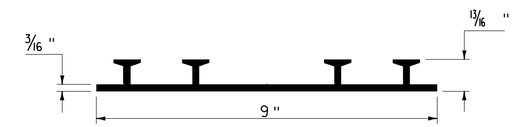

P.V.C. WATERSTOP FOR CONSTRUCTION JOINTS
(NOT TO SCALE)

PAYMENT FOR THE P.V.C. WATERSTOP SHALL BE INCIDENTAL TO THE UNIT BID PRICE FOR THE ADJACENT CONCRETE.

OTHER CONFIGURATIONS OF WATERSTOP MAY BE USED UPON APPROVAL OF THE ENGINEER.

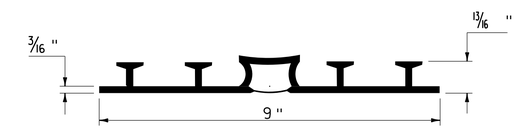

P.V.C. WATERSTOP FOR EXPANSION JOINTS
(NOT TO SCALE)

PAYMENT FOR THE P.V.C. WATERSTOP SHALL BE INCIDENTAL TO THE UNIT BID PRICE FOR THE ADJACENT CONCRETE.

OTHER CONFIGURATIONS OF WATERSTOP MAY BE USED UPON APPROVAL OF THE ENGINEER.

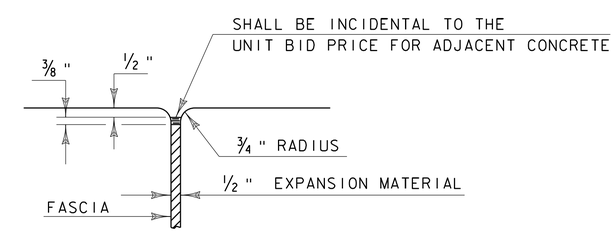

JOINT BETWEEN FASCIA AND WINGWALL
(NOT TO SCALE)

REVISIONS	
MAY 7, 2010	APPROVED FOR USE BY VAOT STRUCTURES SECTION

CONCRETE DETAILS AND NOTES

VERMONT AGENCY OF TRANSPORTATION
STRUCTURES - SECTION

STRUCTURES DETAIL
SD-501.00

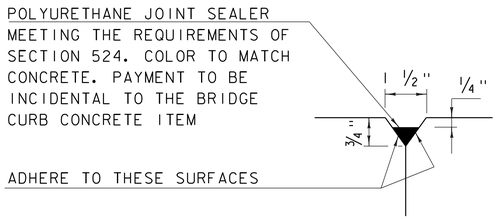

DETAIL "B"
(NOT TO SCALE)

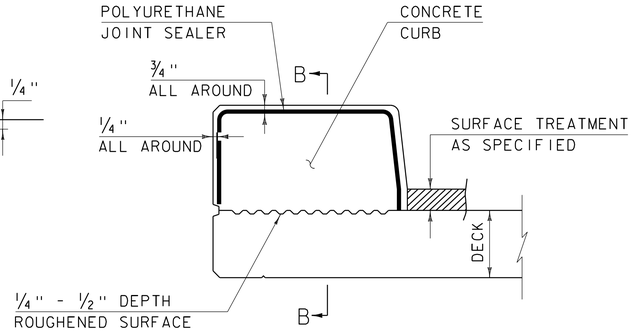

CONCRETE CURB JOINT SECTION
(NOT TO SCALE)

1. SEE TYPICAL HORIZONTAL CONSTRUCTION JOINT DETAIL FOR ADDITIONAL INFORMATION

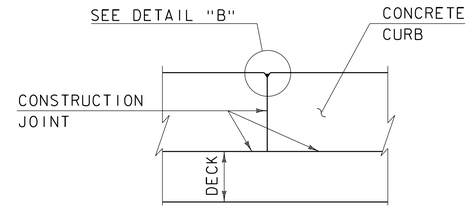

SECTION B - B
(NOT TO SCALE)

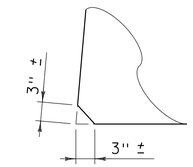

ACUTE ANGLE CLIP DETAIL
(NOT TO SCALE)

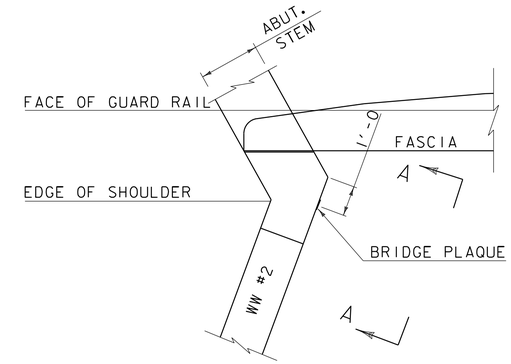

PLAN

CONCRETE CURB JOINT NOTES

1. CONCRETE CURBS MAY BE PLACED IN ONE CONTINUOUS OPERATION IF AN APPROVED SHRINKAGE REDUCING ADMIXTURE LISTED IN THE SPECIAL PROVISIONS IS USED WITH THE CONCRETE MIX DESIGN. PAYMENT FOR THE SHRINKAGE REDUCING ADMIXTURE WILL BE INCIDENTAL TO THE BRIDGE CURB CONCRETE ITEM.

2. IF THE CONTRACTOR CHOOSES NOT TO USE AN APPROVED SHRINKAGE REDUCING ADMIXTURE, THE CURBS SHALL BE CONSTRUCTED WITH CONSTRUCTION JOINTS SPACED AT A MAXIMUM OF 15'-0" CENTER TO CENTER AND 2'-0" MINIMUM FROM THE CENTER OF NEAREST BRIDGE RAILING POST.

3. ON MULTI-SPAN CONTINUOUS SUPERSTRUCTURES, REGARDLESS OF WHETHER APPROVED SHRINKAGE REDUCING ADMIXTURE IS USED, CURB JOINTS SHALL BE LOCATED OVER THE CENTERLINE OF PIERS AND 7'-0" EACH SIDE OF THE CENTERLINE OF EACH PIER.

4. WHEN CURB JOINTS ARE USED THE CURBS SHALL BE PLACED IN ALTERNATE SECTIONS WITH A MINIMUM OF 48 HOUR DELAY BETWEEN ADJACENT PLACEMENTS.

5. LONGITUDINAL REINFORCING SHALL BE CONTINUOUS THROUGH CURB CONSTRUCTION JOINTS. CURB STIRRUP BARS SHALL BE TURNED AS NECESSARY TO MAINTAIN COVER IN THE FLARED CURB ENDS.

6. THE JOINT SPACING AND DETAILS SHOWN SHALL APPLY TO SIDEWALKS WHEN SHOWN IN THE PLANS.

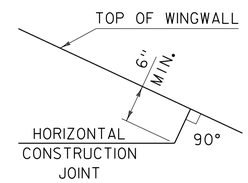

HORIZONTAL WINGWALL CONSTRUCTION JOINT
(NOT TO SCALE)

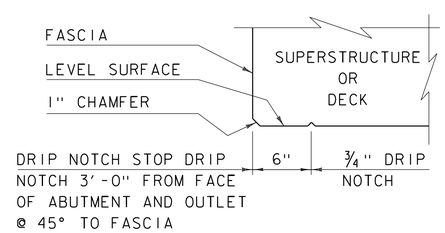

DRIP NOTCH DETAIL
(NOT TO SCALE)

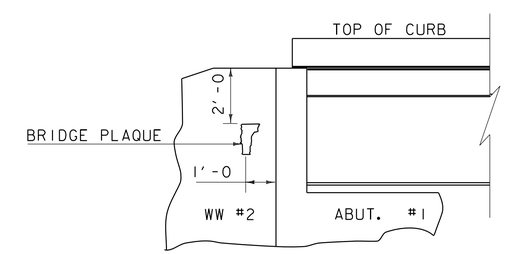

VIEW "A - A"

BRIDGE PLAQUE
(NOT TO SCALE)

THE BRIDGE PLAQUE WILL BE SUPPLIED BY THE AGENCY OF TRANSPORTATION AND SHALL BE INSTALLED BY THE CONTRACTOR AT ABUTMENT #1 ON THE RIGHT SIDE AS SHOWN OR AS DIRECTED BY THE ENGINEER.

PAYMENT FOR INSTALLATION OF THE BRIDGE PLAQUE SHALL BE INCIDENTAL TO THE ADJACENT CONCRETE.

REVISIONS

MAY 7, 2010	APPROVED FOR USE BY VAOT STRUCTURES SECTION
JUNE 4, 2010	MODIFIED AND ADDED TWO DETAILS
OCTOBER 10, 2012	MODIFIED HORZ. JOINT WINGWALL ADD 6" MIN. DIMENSION

CONCRETE DETAILS AND NOTES

VERMONT AGENCY OF TRANSPORTATION
STRUCTURES - SECTION

STRUCTURES DETAIL
SD-502.00

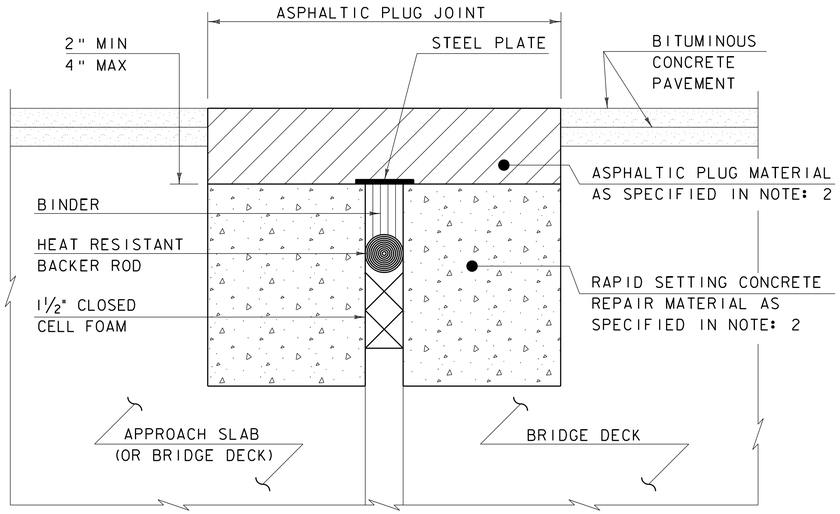

ASPHALTIC PLUG-TYPE JOINT DETAIL - REHAB

NOTES: (NOT TO SCALE)

1. THE CONTRACTOR SHALL REMOVE ALL ASPHALTIC PLUG JOINT MATERIAL AND DETERIORATED CONCRETE AS DIRECTED BY THE ENGINEER. REMOVAL OF THE FIRST 4 INCHES OF MATERIAL SHALL BE INCLUDED IN THE BID PRICE FOR ITEM 516.10 BRIDGE EXPANSION JOINT, ASPHALTIC PLUG. ANY REMOVAL OF MATERIAL GREATER THAN 4 INCHES SHALL BE INCLUDED IN THE BID PRICE OF ITEM 580.20 RAPID SETTING CONCRETE REPAIR MATERIAL WITH COURSE AGGREGATE.

2. THE CONTRACTOR SHALL REPLACE REMOVED MATERIAL THAT IS LESS THAN 4" FROM FINISHED GRADE WITH ASPHALTIC PLUG JOINT MATERIAL MEETING THE REQUIREMENTS OF SUBSECTION 707.15. ALL REMOVED MATERIAL THAT IS GREATER THAN 4 INCHES FROM FINISHED GRADE SHALL BE REPLACED WITH RAPID SETTING CONCRETE REPAIR MATERIAL WITH COARSE AGGREGATE MEETING THE REQUIREMENTS OF SUBSECTION 780.04.

3. REINFORCING STEEL NOT SHOWN FOR CLARITY.

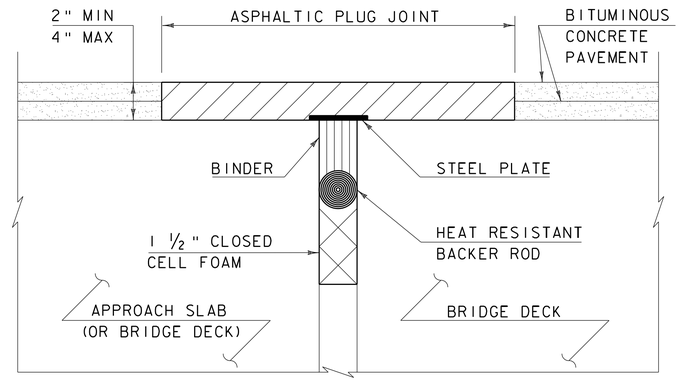

ASPHALTIC PLUG-TYPE JOINT DETAIL - NEW

(NOT TO SCALE)

ASPHALTIC PLUG JOINT NOTES

INSTALLATION:

1. LOCATE THE JOINT CENTRALLY OVER THE DECK OVERLAY EXPANSION GAP OR FIXED JOINT, MARKED OUT TO THE MANUFACTURER'S RECOMMENDED WIDTH.

2. REMOVE THE BITUMINOUS CONCRETE PAVEMENT FULL DEPTH AS SHOWN ON THE PLANS. THE PAVEMENT SHALL BE DRY AND SAW CUT TO THE LIMITS REQUIRED TO PLACE THE JOINT. A PNEUMATIC HAMMER AND CHISEL MAY BE USED ADJACENT TO THE CURB ONLY WHEN SAW CUTTING IS NOT POSSIBLE.

3. BLAST CLEAN THE JOINT AREA OF DEBRIS, ASPHALT AND SHEET MEMBRANE. THOROUGHLY DRY THE JOINT AREA WITH COMPRESSED AIR PRIOR TO APPLYING BINDER MATERIAL.

4. REPAIR MATERIAL GREATER THAN 4 INCHES FROM FINISHED GRADE WITH RAPID SETTING CONCRETE REPAIR MATERIAL WITH COARSE AGGREGATE MEETING THE REQUIREMENTS OF SUBSECTION 780.04.

5. PLACE PROPERLY SIZED HEAT RESISTANT BACKER ROD IN THE MOVEMENT GAP ALLOWING FOR 1" +/- OF BINDER ABOVE THE ROD.

6. HEAT AND PLACE THE BINDER MATERIAL AS RECOMMENDED BY THE MANUFACTURER.

7. PLACE 1/4" THICK BY 8" WIDE SECTIONS OF STEEL PLATE OVER THE CENTER OF THE MOVEMENT GAP. SECURE THE PLATES FROM MOVING BY INSERTING LOCATING PINS THROUGH THE PRE-STAMPED HOLES INTO BACKER ROD AND COVER WITH HOT BINDER. THE STEEL PLATES MAY BE OMITTED WHERE THE ENGINEER DETERMINES THAT THE APPROACH SLAB OR BRIDGE DECK WILL PROVIDE INADEQUATE SUPPORT AND WHERE VERTICAL MOVEMENT OF THE PLATES MIGHT OCCUR.

8. HEAT AND MIX THE BINDER MATERIAL AND AGGREGATE AS RECOMMENDED BY THE MANUFACTURER.

9. INSTALLATION OF MATERIAL, COMPACTION, AND TOP COATING SHALL BE AS RECOMMENDED BY THE MANUFACTURER.

10. IMMEDIATELY AFTER TOP COATING, CAST AN ANTI-SKID MATERIAL OVER THE JOINT TO REDUCE THE RISK OF TRACKING.

11. ONCE THE JOINT REACHES 82 DEG C (180 DEG F) +/-, WATER MAY BE USED TO EXPEDITE THE COOLING PROCESS.

12. PROTECT JOINT FROM TRAFFIC UNTIL THE MATERIAL HAS COOLED TO 51 DEG C (125 DEG F) +/-.

WEATHER LIMITATIONS

APPLY BINDER MATERIAL ONLY WHEN THE FOLLOWING CONDITIONS PREVAIL OR AS RECOMMENDED BY THE MANUFACTURER:

1. THE AMBIENT AIR TEMPERATURE IS AT LEAST 10 DEG C (50 DEG F) AND RISING.

2. THE ROAD SURFACE IS DRY.

3. WEATHER CONDITIONS OR OTHER CONDITIONS ARE FAVORABLE AND ARE EXPECTED TO REMAIN SO FOR THE PERFORMANCE OF SATISFACTORY WORK.

REVISIONS	
MAY 7, 2010	APPROVED FOR USE BY VAOT STRUCTURES SECTION

BRIDGE JOINT ASPHALTIC PLUG

VERMONT AGENCY OF TRANSPORTATION
STRUCTURES - DIVISION

STRUCTURES DETAIL

SD-516.10

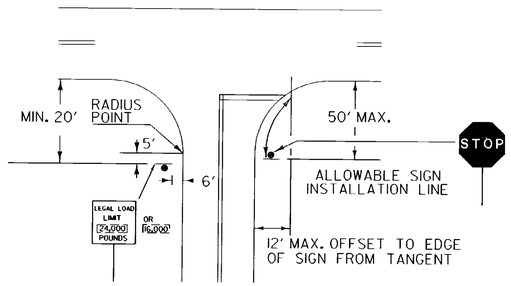

STOP SIGN SHALL BE PLACED ON DRIVERS RIGHT, MAINTAINING MAXIMUM VISIBLITY. CLEARANCE SHALL BE A MINIMUM OF 6' AND A MAXIMUM OF 50' FROM EDGE LINE OF INTERSECTING ROADWAY AND DOES NOT HAVE TO BE ADJACENT TO THE STOP BAR.

LEGAL LOAD LIMIT AND STOP SIGNS AT INTERSECTIONS WITH TOWN HIGHWAYS

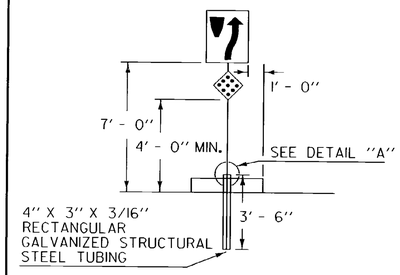

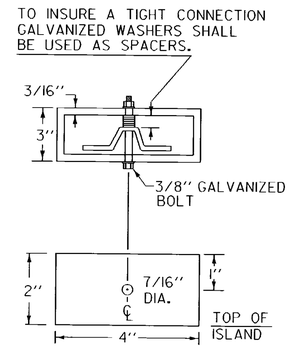

SLEEVE DETAIL "A"

SIGNS ON MEDIAN ISLANDS IN THE LINE OF TRAFFIC

INCREASE VERTICAL CLEARANCE TO 7' IN AREAS OF FREQUENT ROADSIDE PARKING OR PEDESTRIAN ACTIVITY

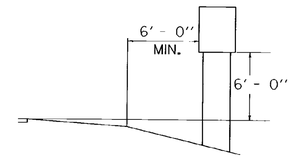

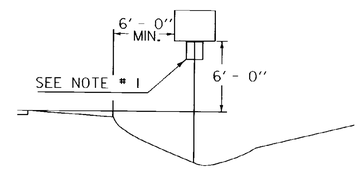

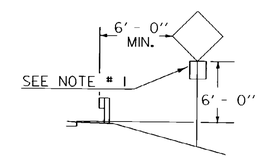

RURAL

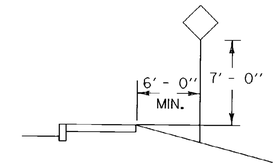

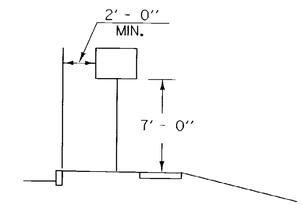

IF SUFFICIENT CLEARANCE IS NOT AVAILABLE BETWEEN CURB AND SIDEWALK MOUNT SIGN BEHIND SIDEWALK AS SHOWN AT TOP. CHECK FOR ADEQUATE R.O.W..

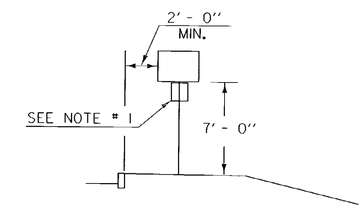

URBAN

NOTES:

1. IN BOTH RURAL AND URBAN LOCATIONS. IF A SECONDARY SIGN IS MOUNTED BELOW ANOTHER SIGN, THE MINIMUM CLEARANCE MAY BE REDUCED BY ONE FOOT.
2. IN RURAL AREAS WITH NO OR MINIMAL SHOULDER, THE LATERAL CLEARANCE TO THE EDGE OF A SIGN SHOULD BE A MINIMUM OF 12' FROM THE EDGE OF THE TRAVELED WAY.
3. ALSO SEE OTHER STANDARD SHEETS FOR MOUNTING CLEARANCE AND SPACING OF DESTINATION AND ROUTE MARKER ASSEMBLIES AND TOWN LINE SIGNS.

POST REFERENCE:

REFER TO THE DETAILS ON THE APPROPRIATE STANDARD DRAWING FOR INFORMATION CONCERNING THE PROPER MOUNTING OF SIGNS ON APPROPRIATE POSTS.

OTHER STDS. REQUIRED: **E-160** **E-161** **E-162** **E-163** **E-164**

REVISIONS AND CORRECTIONS

JAN. 23, 1995 - DATE OF ORIGINAL ISSUE

AUG. 08, 1995 - VARIOUS MINOR NOTE REVISIONS

APPROVED FOR THIS PROJECT AND/OR DESIGN IMPLEMENTATION. FHWA FINAL APPROVAL PENDING.

APPROVED

Gordon S. MacArthur
DIRECTOR OF ENGINEERING

David A. Ross
TRAFFIC AND SAFETY ENGINEER

STANDARD SIGN PLACEMENT CONVENTIONAL ROAD

/traf/std/stdel21.dgn : stdel21.i

VERMONT AGENCY OF TRANSPORTATION

STANDARD

E-121

"W" BEAM GUARDRAIL WITH STEEL POSTS

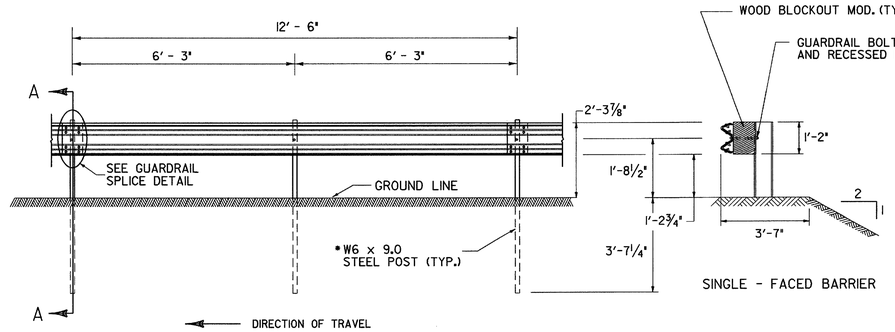

ELEVATION FROM ℄ OF ROAD

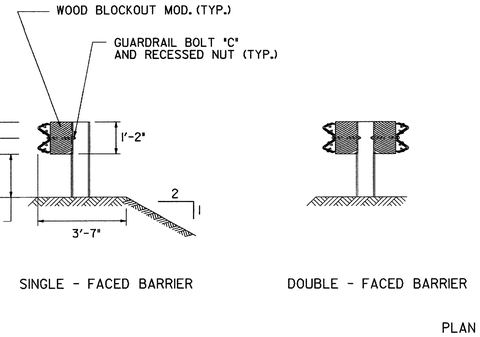

SECTION A -A

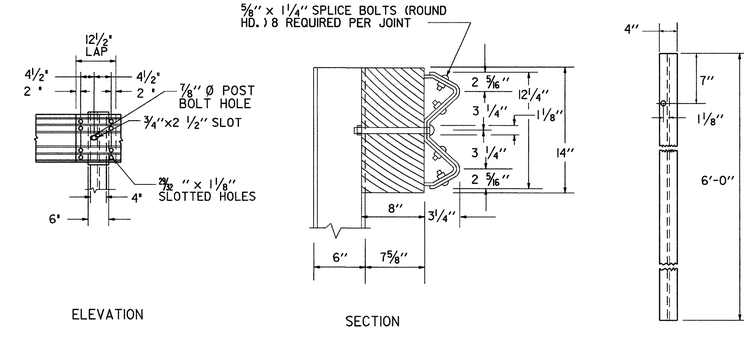

GUARDRAIL SPLICE DETAIL

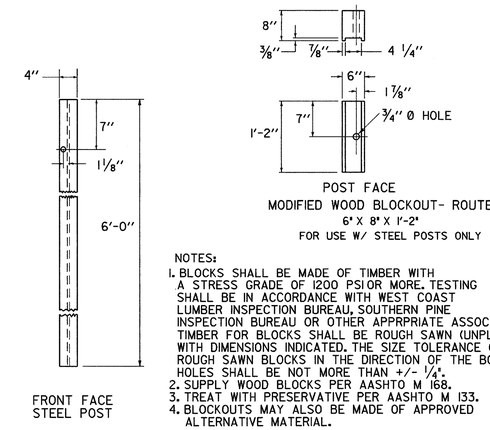

NOTES:
1. BLOCKS SHALL BE MADE OF TIMBER WITH A STRESS GRADE OF 1200 PSIOR MORE. TESTING SHALL BE IN ACCORDANCE WITH WEST COAST LUMBER INSPECTION BUREAU, SOUTHERN PINE INSPECTION BUREAU OR OTHER APPRPRIATE ASSOCIATION. TIMBER FOR BLOCKS SHALL BE ROUGH SAWN (UNPLANED) WITH DIMENSIONS INDICATED. THE SIZE TOLERANCE OF ROUGH SAWN BLOCKS IN THE DIRECTION OF THE BOLT HOLES SHALL BE NOT MORE THAN +/- ¼".
2. SUPPLY WOOD BLOCKS PER AASHTO M 168.
3. TREAT WITH PRESERVATIVE PER AASHTO M 133.
4. BLOCKOUTS MAY ALSO BE MADE OF APPROVED ALTERNATIVE MATERIAL.

"W" BEAM GUARDRAIL WITH WOOD POSTS

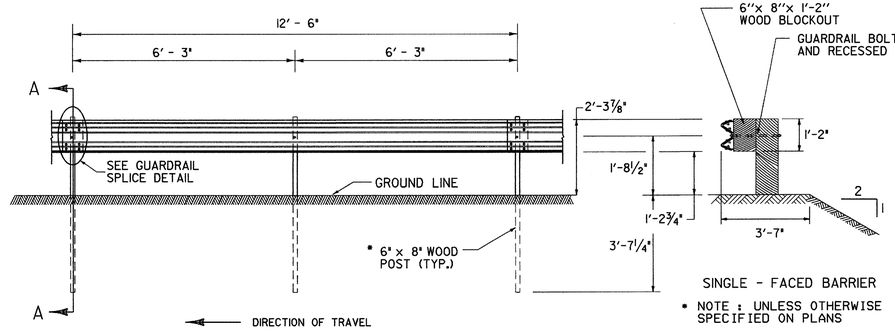

ELEVATION FROM ℄ OF ROAD

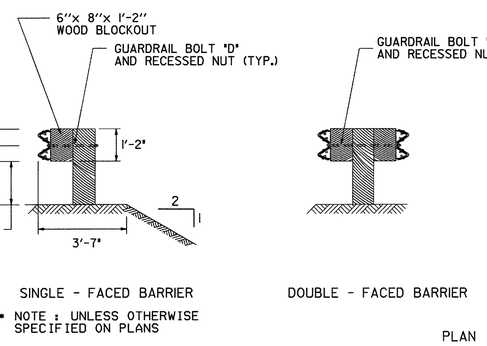

* NOTE : UNLESS OTHERWISE SPECIFIED ON PLANS

SECTION A -A

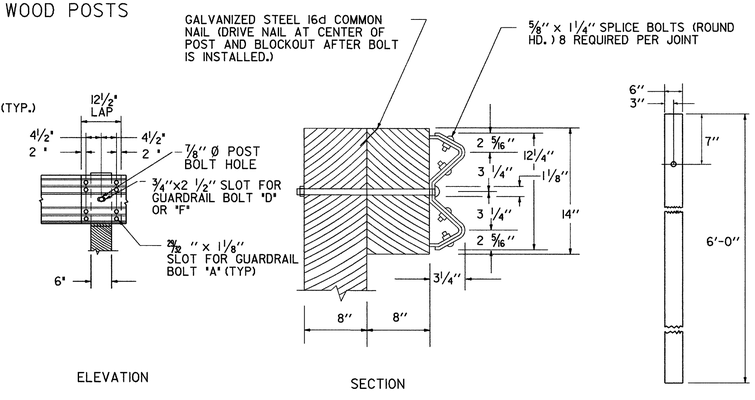

GUARDRAIL SPLICE DETAIL

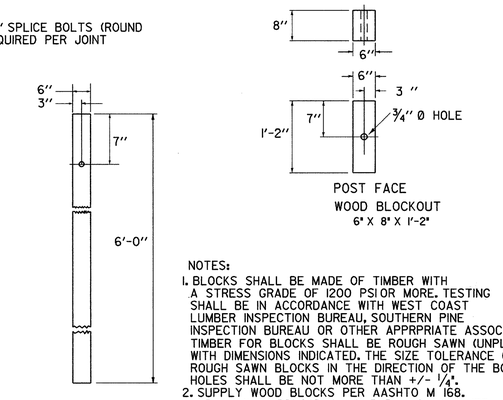

NOTES:
1. BLOCKS SHALL BE MADE OF TIMBER WITH A STRESS GRADE OF 1200 PSIOR MORE. TESTING SHALL BE IN ACCORDANCE WITH WEST COAST LUMBER INSPECTION BUREAU, SOUTHERN PINE INSPECTION BUREAU OR OTHER APPRPRIATE ASSOCIATION. TIMBER FOR BLOCKS SHALL BE ROUGH SAWN (UNPLANED) WITH DIMENSIONS INDICATED. THE SIZE TOLERANCE OF ROUGH SAWN BLOCKS IN THE DIRECTION OF THE BOLT HOLES SHALL BE NOT MORE THAN +/- ¼".
2. SUPPLY WOOD BLOCKS PER AASHTO M 168.
3. TREAT WITH PRESERVATIVE PER AASHTO M 133.
4. BLOCKOUTS MAY ALSO BE MADE OF APPROVED ALTERNATIVE MATERIAL.

GUARDRAIL DELINEATOR

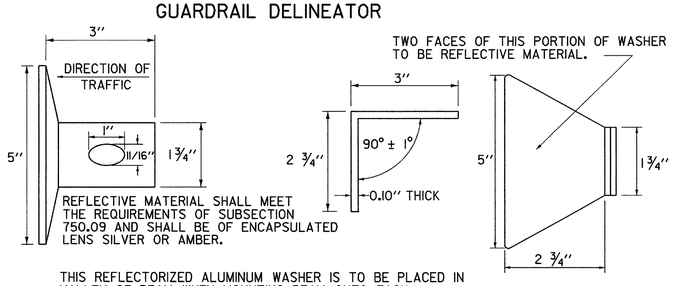

THIS REFLECTORIZED ALUMINUM WASHER IS TO BE PLACED IN VALLEY OF BEAM WHEN MOUNTING BEAM ONTO EACH FIFTH POST. WASHER SHALL MEET SPECIFICATION REQUIREMENTS FOR A.S.T.M. B-209 ALLOY 5052-H32

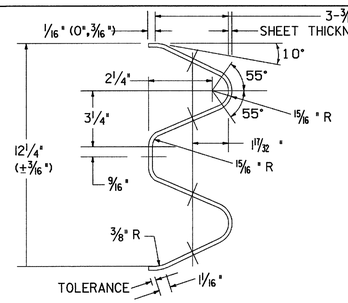

ARTBA RE-3[2@6'-3"=12'-6" CLASS A, TYPE 1]-73

TYPICAL GUARDRAIL SECTION

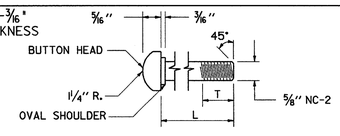

GUARDRAIL BOLTS				FASTENER USED IN	
BOLT DES.	ARTBA REF. NO.	L	T (MIN.)	STEEL POSTS	WOOD POSTS
"A"	F-3[1¼]-76	1¼"	1"	X	X
"C"	F-3[9½]-76	9½"	1¾"	X	
"D"	F-3[18]-76	18"	2½"		X
"F"	F-3[25]-76	25"	2"		X

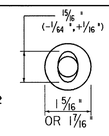

GUARDRAIL BOLT

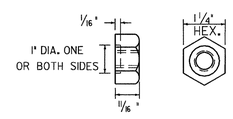

RECESSED NUT FOR GUARDRAIL BOLT

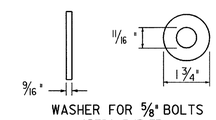

WASHER FOR ⅝" BOLTS
ARTBA F-13-73
NOTE: WASHER IS USED UNDER RECESSED NUT WHERE GUARDRAIL BOLT IS USED WITH WOOD POSTS.

GENERAL NOTES:

1. GUARDRAIL SHALL MEET THE REQUIREMENTS OF AASHTO M 180, CLASS A, TYPE 1, UNLESS OTHERWISE DESIGNATED
2. GUARDRAIL SHALL BE SINGLE FACED UNLESS OTHERWISE DESIGNATED
3. GUARDRAIL SECTIONS SHALL BE LAPPED IN THE DIRECTION OF TRAFFIC FLOW FOR THE LANE NEAREST THE GUARDRAIL.
4. FOR DESCRIPTION AND SPECIFICATION OF PARTS IDENTIFIED BY (ARTBA ...) AND OTHER DETAILS OF POSTS, POST ACCESSORIES, FASTENERS & RAIL ELEMENTS, SEE AASHTO-AGC-ARTBA JOINT TASK FORCE NO. 13, TITLED "A GUIDE TO STANDARDIZED HIGHWAY BARRIER HARDWARE", LATEST EDITION.
5. STANDARD STEEL BEAM TO BE 1/8" AND THE HEAVY DUTY TO BE 3/64" THICK.

OTHER STANDARD REQUIRED G-1d

REVISIONS AND CORRECTIONS
JUNE 1, 1994 - REISSUED, WITHOUT CHANGE, UNDER NEW SIGNATURES.
JAN.3,2000 - UPDATED TO REFLECT METRIC STD. CHANGES

APPROVED

DIRECTOR OF PROJECT DEVELOPMENT

ROADWAY AND TRAFFIC DESIGN ENGINEER

STEEL BEAM GUARDRAIL WITH STEEL POSTS
STEEL BEAM GUARDRAIL WITH WOOD POSTS

VERMONT AGENCY OF TRANSPORTATION

STANDARD
G-1

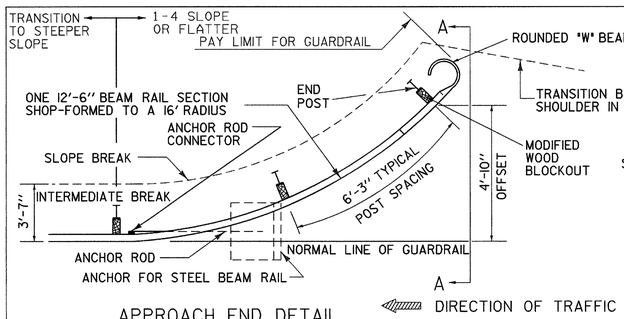

APPROACH END DETAIL

NHS APPROVED FOR USE WHERE DESIGN SPEED IS 40 OR LESS MPH

NON-NHS APPROVED FOR USE WHERE DESIGN SPEED IS 50 OR LESS MPH

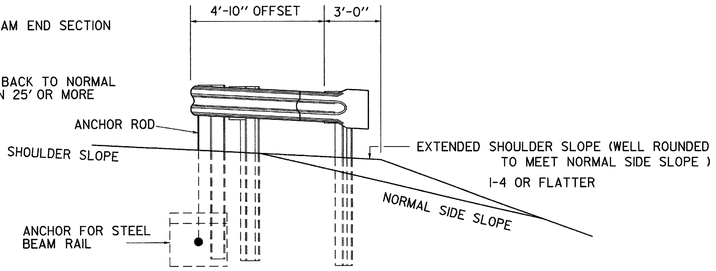

SECTION A-A

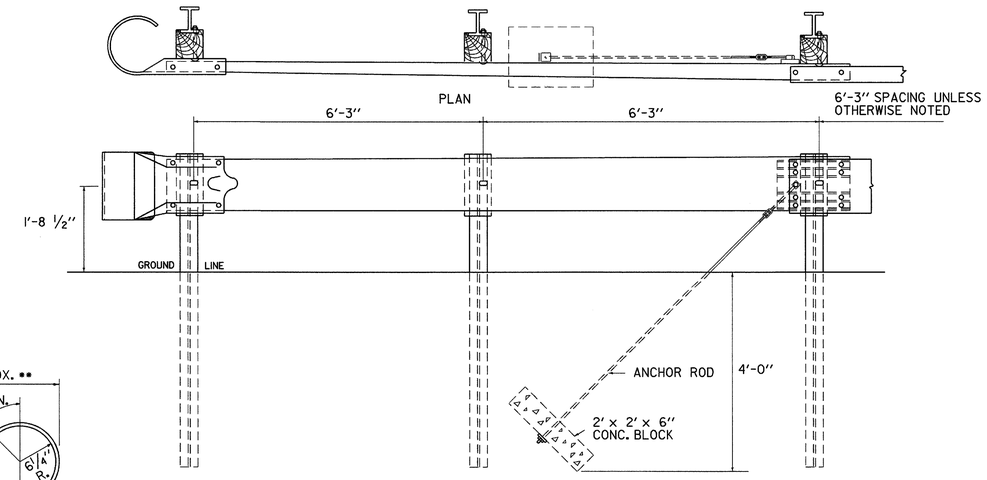

ASSEMBLY ELEVATION

TRAILING END TERMINAL FOR USE ON ONE-WAY HIGHWAYS

GENERAL NOTES:

1. ALL METAL PARTS SHALL BE GALVANIZED.
2. ALL WOOD POSTS SHALL BE GIVEN A PRESERVATIVE TREATMENT.
3. DETAILS PERTINENT TO THE STANDARD INSTALLATION OF "W" BEAM SECTIONS WILL BE FOUND ON STANDARD DRAWING G-1.
4. FOR DESCRIPTION AND SPECIFICATIONS OF PARTS IDENTIFIED BY "(ARTBA...)" AND OTHER DETAILS OF POSTS, POST ACCESSORIES, FASTENERS AND RAIL ELEMENTS, SEE AASHTO-AGC-ARTBA JOINT TASK FORCE NO. 13, TITLED "A GUIDE TO STANDARDIZED HIGHWAY BARRIER HARDWARE", LATEST EDITION.

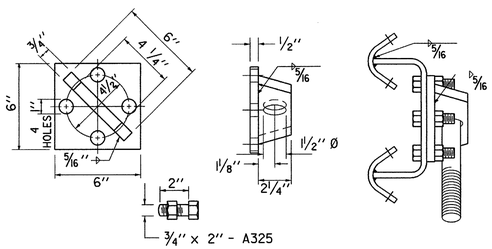

ANCHOR ROD CONNECTOR

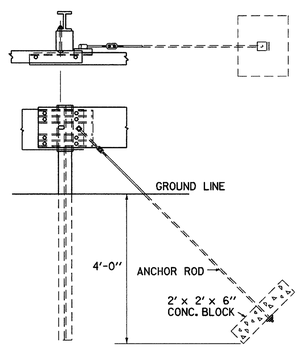

ANCHOR ROD

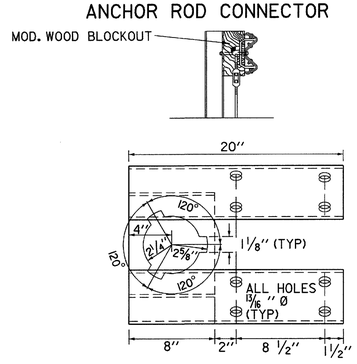

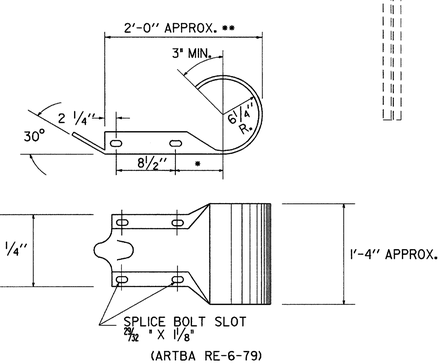

(ARTBA RE-6-79)

ROUNDED "W" BEAM END SECTION

* THIS DIMENSION IS 7 1/2" INRE-7-79. IF THE DIMENSION IS USED IN THIS PART, IT WILL GIVE AN ACCEPTABLE OVERALL LENGTH (**) OF APPROXIMATELY 2'- 11/2."

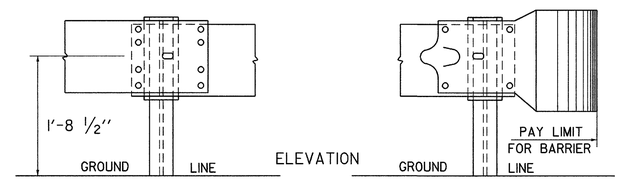

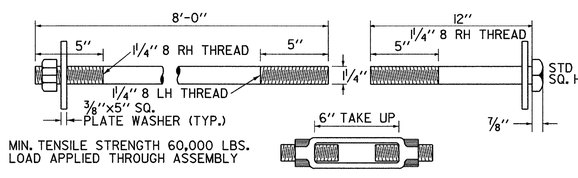

MIN. TENSILE STRENGTH 60,000 LBS.
LOAD APPLIED THROUGH ASSEMBLY

TURNBUCKLE

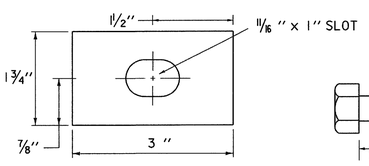

RECTANGULAR GUARDRAIL PLATE WASHER

(ARTBA F-12-73)

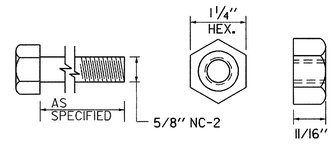

5/8" HEX NUT AND BOLT "F"

(ARTBA F-8-76)

FASTENER DETAILS

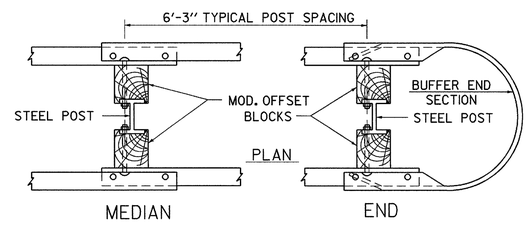

STEEL BEAM MEDIAN BARRIER

NOTE: TO BE USED OUTSIDE CLEAR ZONE ONLY.

OTHER STANDARD REQUIRED G-1

REVISIONS AND CORRECTIONS
JUNE 1, 1994 - REISSUED, WITHOUT CHANGE, UNDER NEW SIGNATURES.
JAN.3,2000 - UPDATED TO REFLECT METRIC STD. CHANGES

APPROVED

DIRECTOR OF PROJECT DEVELOPMENT

ROADWAY AND TRAFFIC DESIGN ENGINEER

STEEL BEAM GUARDRAIL APPROACH END TERMINAL
STEEL BEAM GUARDRAIL TRAILING END TERMINAL
ANCHOR FOR STEEL BEAM GUARDRAIL
STEEL BEAM MEDIAN BARRIER

VERMONT AGENCY OF TRANSPORTATION

STANDARD

G-1d

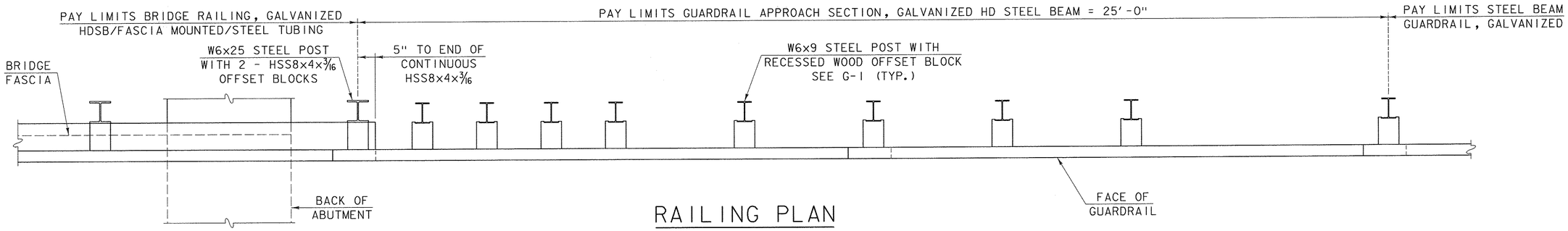

RAILING PLAN

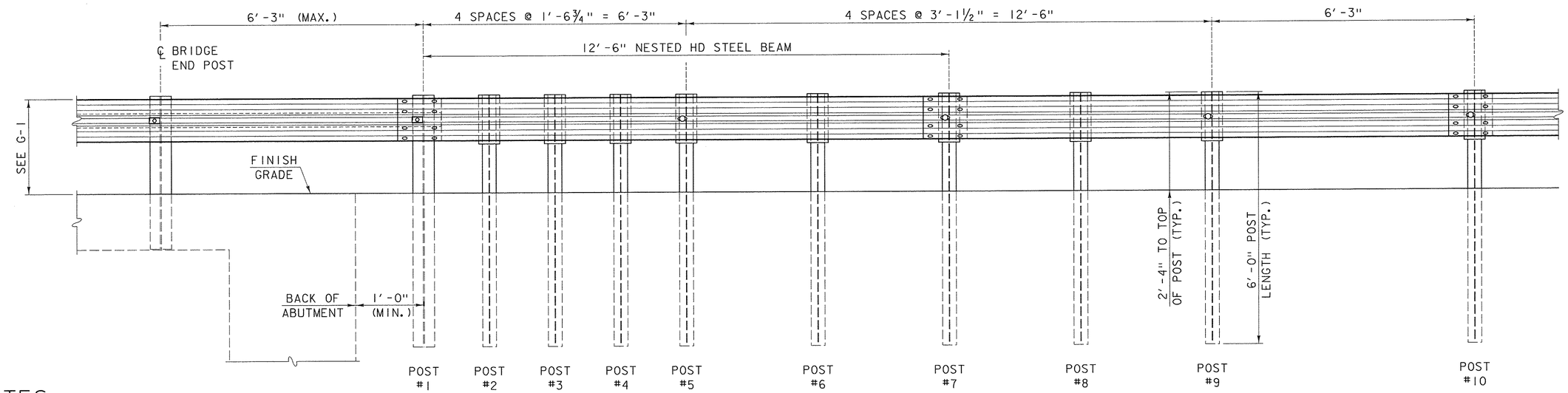

RAILING ELEVATION

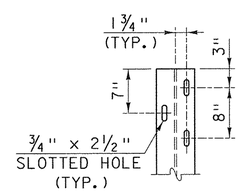

POST #1 HOLE DETAIL

NOTES

1. PAYMENT FOR POST #1, HSS8x4x3/16 OFFSET BLOCKS AND TUBULAR BACKUP RAIL EXTENDING TO POST #1 OFF THE BRIDGE SHALL BE MADE UNDER BRIDGE RAILING, GALVANIZED HDSB/FASCIA MOUNTED/STEEL TUBING.
2. BLOCKOUTS SHALL BE RECESSED WOOD ONLY. STEEL OR PLASTIC BLOCKOUTS ARE NOT PERMITTED.
3. GUARDRAIL IS NOT ATTACHED TO POST NUMBERS 2-4, 6 AND 8. THERE SHALL BE NO GAP BETWEEN THE POSTS THAT ARE NOT ATTACHED AND THE RAIL. OFFSET BLOCKS SHALL BE ATTACHED TO POST WITH STANDARD POST BOLT.
4. POSTS MAY BE SET IN DRILLED HOLES OR DRIVEN TO GRADE.
5. THIS RAILING MEETS THE REQUIREMENTS FOR A NCHRP REPORT 350 TL-3 SERVICE LEVEL.

OTHER STDS. REQUIRED: **G-1**

REVISIONS AND CORRECTIONS

MAY 24, 2012 - ORIGINAL APPROVAL

APPROVED

Wm. Michael Hedges
STRUCTURES ENGINEER

Richard Fahnoun 6-5-12
DIRECTOR OF PROGRAM DEVELOPMENT

Mark D. Richter 6-11-2012
FEDERAL HIGHWAY ADMINISTRATION

GUARDRAIL APPROACH SECTION, GALVANIZED HD STEEL BEAM

VERMONT AGENCY OF TRANSPORTATION

STANDARD

S-367B

1. TRAFFIC CONTROL DEVICES NOT DETAILED IN THE VERMONT AGENCY OF TRANSPORTATION (VAOT) ''STANDARD DRAWINGS'' OR THE PROJECT PLANS SHALL BE IN ACCORDANCE WITH THE "MANUAL ON TRAFFIC CONTROL DEVICES" (MUTCD) AND THE ''STANDARD HIGHWAY SIGNS AND MARKINGS'' BOOK (SHSM) PUBLISHED BY THE FEDERAL HIGHWAY ADMINISTRATION (FHWA).

2. CONSTRUCTION SIGNS SHALL BE ERECTED BEFORE THE START OF ANY WORK AND SHALL BE COVERED UNTIL WORK COMMENCES, DURING PERIODS OF INACTIVITY OR UPON COMPLETION OF THE WORK. EACH SIGN SHALL BE ERECTED IN A NEAT AND WORKMANLIKE MANNER.

3. CONSTRUCTION SIGN COVERS SHALL CONSIST OF A PANEL, PAINTED FLAT BLACK, THE SAME SIZE AS THE SIGN IT COVERS. THE PANEL SHALL BE OF WOOD, PLYWOOD, HARDBOARD OR ANY MATERIAL SATISFACTORY TO THE ENGINEER. NO MATERIAL WILL BE APPROVED THAT WILL DETERIORATE BY EXPOSURE TO THE WEATHER DURING THE PROJECT. MOUNTING OF THE PANEL SHALL BE DONE IN SUCH A WAY AS NOT TO DAMAGE THE SIGN FACE MATERIAL.

4. SIGNS SHALL BE MAINTAINED IN A CLEAN AND LEGIBLE CONDITION SATISFACTORY TO THE ENGINEER. THEY SHALL BE KEPT PLUMB AND LEVEL, AND ALWAYS PRESENT A NEAT APPEARANCE. DAMAGED, DEFACED OR DIRTY SIGNS SHALL BE REPAIRED, CLEANED OR REPLACED AS ORDERED BY THE ENGINEER.

5. NO CROSS-BRACING OR BACK-BRACING TO KEEP POSTS PLUMB WILL BE ALLOWED. CONCRETE FOUNDATIONS, COLLARS OR SOIL BEARING PLATES ARE NOT PERMITTED. CONSTRUCTION SIGNS SHALL BE PLACED ON TWO POSTS.

6. CONSTRUCTION SIGNS INSTALLED ON POSTS SHALL BE SET SECURELY IN THE GROUND. THE BOTTOM OF A SIGN SHALL BE AT LEAST FIVE FEET ABOVE THE EDGE OF PAVEMENT AND THE NEAREST EDGE OF A SIGN SHALL BE AT LEAST SIX FEET OUTSIDE THE SHOULDER POINT, FOUR FEET OUTSIDE GUARDRAIL, OR TWO FEET OUTSIDE CURBING OR SIDEWALK. THE INSTALLATION OF SIGNS SHALL BE SUBJECT TO APPROVAL OF THE ENGINEER. IN URBAN AREAS, THE BOTTOM OF THE SIGN SHALL BE AT LEAST SEVEN FEET ABOVE THE SIDEWALK OR EDGE OF PAVEMENT, WHICHEVER IS HIGHER.

7. PORTABLE SIGNS SHALL BE PLACED ON THE EDGE OF ROADWAY AND A MINIMUM OF ONE FOOT ABOVE THE TRAVELED WAY. ALL VEGETATION THAT INTERFERES WITH VISIBILITY OF THE SIGNS SHALL BE REMOVED. WHEN PLACED BEHIND GUARDRAIL, THE BOTTOM OF THE SIGN FACE SHALL BE ABOVE THE TOP OF THE GUARDRAIL.

8. SIGNS SHALL BE REMOVED UPON COMPLETION OF THE WORK AT THE DISCRETION OF THE ENGINEER.

9. ROLL UP CONSTRUCTION SIGNS SHALL HAVE RETROREFLECTIVE SHEETING EQUAL TO OR EXCEEDING THE "AMERICAN ASSOCIATION OF STATE HIGHWAY AND TRANSPORTATION OFFICIALS" (AASHTO) M 268 ["AMERICAN SOCIETY FOR TESTING AND MATERIALS" (ASTM) D 4956] TYPE VI AND TYPE VII UNLESS OTHERWISE NOTED.

10. SOLID SUBSTRATE CONSTRUCTION SIGNS SHALL HAVE RETROREFLECTIVE SHEETING EQUAL TO OR EXCEEDING THE "AMERICAN ASSOCIATION OF STATE HIGHWAY AND TRANSPORTATION OFFICIALS" (AASHTO) M 268 ["AMERICAN SOCIETY FOR TESTING AND MATERIALS" (ASTM) D 4956] TYPE VIII OR IX REQUIREMENTS UNLESS OTHERWISE NOTED.

11. WHERE CONSTRUCTION SIGN INSTALLATIONS ARE NOT PROTECTED BY GUARDRAIL OR OTHER APPROVED TRAFFIC BARRIERS, ALL SIGN STANDS AND POST INSTALLATIONS SHALL MEET "NATIONAL COOPERATIVE HIGHWAY RESEARCH PROGRAM" (NCHRP) REPORT 350 OR THE AASHTO "MANUAL FOR ASSESSING SAFETY HARDWARE" (MASH). THE APPROPRIATE RESOURCE SHALL BE DETERMINED AS DESCRIBED IN THE MASH PUBLICATION. NO SIGN POSTS SHALL EXTEND OVER THE TOP OF THE SIGN INSTALLED ON SAID POSTS. WHEN ANCHORS ARE INSTALLED, STUBS SHALL NOT BE GREATER THAN FOUR INCHES ABOVE EXISTING GROUND.

12. ROADWAY AND SHOULDER WIDTHS DEPICTED ON THE STANDARD DRAWINGS MAY VARY.

13. THESE STANDARD DRAWINGS ARE INTENDED TO SERVE AS VTRANS STANDARD OPERATING PROCEDURE. IT IS NOTED THAT COMPONENT PARTS OF A TEMPORARY TRAFFIC CONTROL WORK ZONE MAY BE MODIFIED DUE TO FIELD CONDITIONS, AT THE DISCRETION OF THE ENGINEER.

OTHER STDS. REQUIRED: **NONE**

REVISIONS AND CORRECTIONS

AUG. 6, 2012 - ORIGINAL APPROVAL DATE

APPROVED

HIGHWAY SAFETY & DESIGN ENGINEER

DIRECTOR OF PROGRAM DEVELOPMENT

Mark D. Richter

FEDERAL HIGHWAY ADMINISTRATION

TRAFFIC CONTROL GENERAL NOTES

VERMONT AGENCY OF TRANSPORTATION

STANDARD

T-1

LEGEND

(A) ROAD WORK AHEAD — W20-1

(B) ROAD WORK 500 FT — W20-1

(C) SIDE ROAD WORK AHEAD — VC-869

(D) SIDE ROAD WORK 500 FT — VC-869

(E) SIDE ROAD WORK LEFT — VC-869

(F) SIDE ROAD WORK RIGHT — VC-869

(G) ROAD WORK NEXT XX MILES — G20-1

(H) END ROAD WORK — G20-2

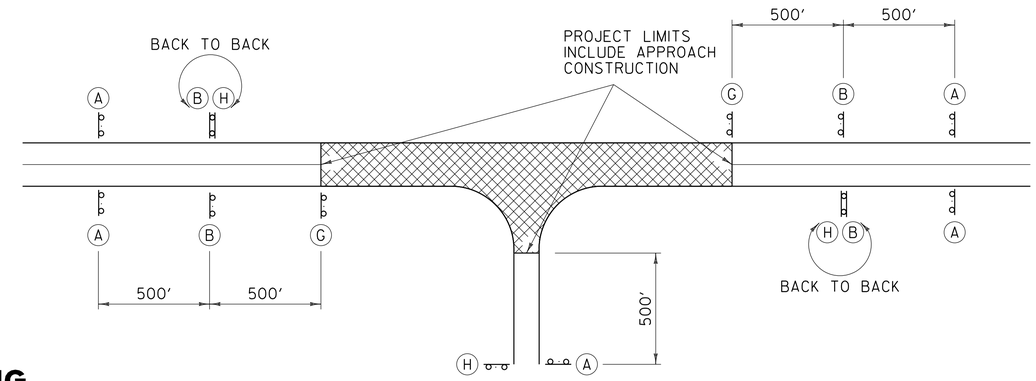

TYPICAL APPROACH SIGNING

FIELD CONDITIONS MAY DICTATE THE ACTUAL PLACEMENT.

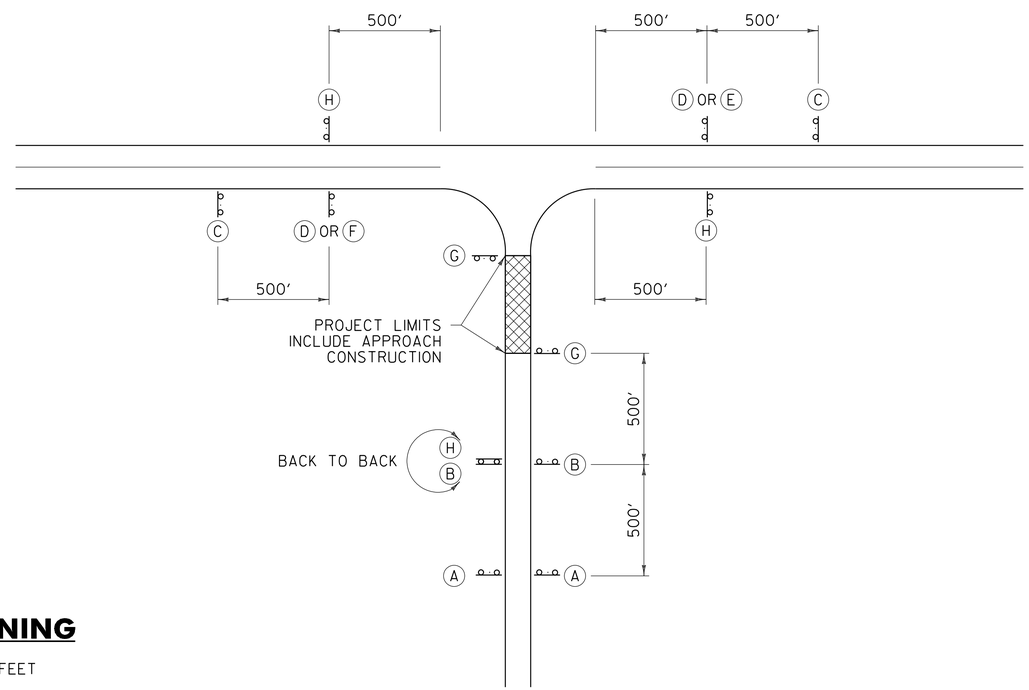

SIDE ROAD APPROACH SIGNING

TO BE USED WHEN CONSTRUCTION IS UP TO 1000 FEET FROM THE INTERSECTION. FIELD CONDITIONS MAY DICTATE THE ACTUAL PLACEMENT.

GENERAL NOTES:

1. SIGNS SHOWN ON THIS SHEET ARE INTENDED FOR USE IN PROVIDING ADVANCE WARNING AND INFORMATION ON CONSTRUCTION PROJECTS OVER WHICH TRAFFIC WILL BE MAINTAINED. WHEN ADDITIONAL APPROACH SIGNS OR OTHER TYPES OF ADVANCE SIGNING OR CONTROL ARE NECESSARY, THE PLANS AND/OR THE SPECIFICATIONS FOR THAT PROJECT WILL GIVE THE DETAILS OF THE SIGNS AND DEVICES REQUIRED. FOR ON-PROJECT CONSTRUCTION SIGNS, REFER TO APPROPRIATE STANDARD SHEETS.
2. THE "ROAD WORK NEXT XX MILES" SIGN (G20-1) SHALL BE INSTALLED IN ADVANCE OF TEMPORARY TRAFFIC CONTROL ZONES THAT ARE MORE THAN TWO MILES IN LENGTH OR AS DIRECTED BY THE ENGINEER. DISTANCES SHALL BE STATED TO THE NEAREST WHOLE MILE.
3. SIGNS SHALL BE LOCATED AS DETAILED ON THIS SHEET OR AS OTHERWISE SHOWN ON THE PLANS. THEY SHALL APPEAR AT EACH END OF THE HIGHWAY UNDER CONSTRUCTION AND ON ALL INTERSECTING PUBLIC HIGHWAYS. THE ENGINEER SHALL DETERMINE THE EXACT LOCATIONS.

OTHER STDS. REQUIRED: **T–1, T–28**

REVISIONS AND CORRECTIONS

AUG. 6, 2012 - ORIGINAL APPROVAL DATE

APPROVED

HIGHWAY SAFETY & DESIGN ENGINEER

DIRECTOR OF PROGRAM DEVELOPMENT

Mark D. Richter

FEDERAL HIGHWAY ADMINISTRATION

CONVENTIONAL ROADS CONSTRUCTION APPROACH SIGNING

VERMONT AGENCY OF TRANSPORTATION

STANDARD

T-10

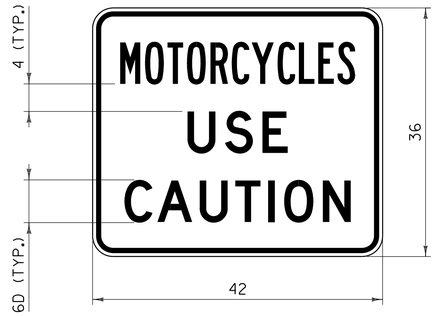

VC–004P

NOTES:

1. CORNERS SHALL BE ROUNDED TO A THREE INCH RADIUS.
2. THE BORDER SHALL BE ¾ INCH WIDE WITH A ½ INCH INDENT FROM THE EDGE OF THE SIGN.
3. "MOTORCYCLES" SHALL HAVE A SPECIFIED WIDTH OF 34 INCHES.
4. "USE" SHALL HAVE A SPECIFIED WIDTH OF 14 ½ INCHES.
5. "CAUTION" SHALL HAVE A SPECIFIED WIDTH OF 32 ¾ INCHES.
6. SIGN SHALL ONLY BE INSTALLED AS A SUPPLEMENTAL TO A PARENT WARNING SIGN AND SHALL NOT BE INSTALLED BY ITSELF.

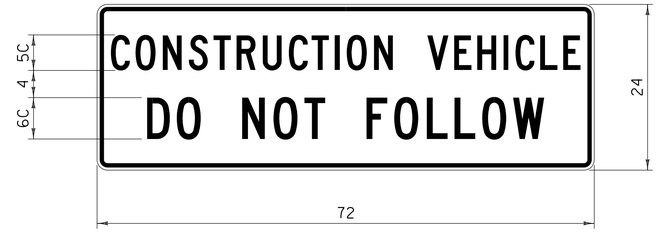

VC–007

NOTES:

1. CORNERS SHALL BE ROUNDED TO A 1½ INCH RADIUS.
2. THE BORDER SHALL BE ⅝ INCH WIDE WITH A ⅜ INCH INDENT FROM THE EDGE OF THE SIGN.
3. "CONSTRUCTION VEHICLE" SHALL HAVE A SPECIFIED WIDTH OF 68 INCHES.
4. "DO NOT FOLLOW" SHALL HAVE A SPECIFIED WIDTH OF 57 ½ INCHES.
5. SIGN SHALL BE MOUNTED IN A CONSPICUOUS LOCATION ON THE REAR OF THE CONSTRUCTION VEHICLE.
6. THE SIGN SHALL BE MOUNTED AS NOT TO INTERFERE WITH THE VISIBILITY OF DIRECTIONAL SIGNALS OR TAIL LIGHTS AS REQUIRED BY LAW.
7. SIGN SHALL BE COVERED OR REMOVED WHEN NOT IN USE.

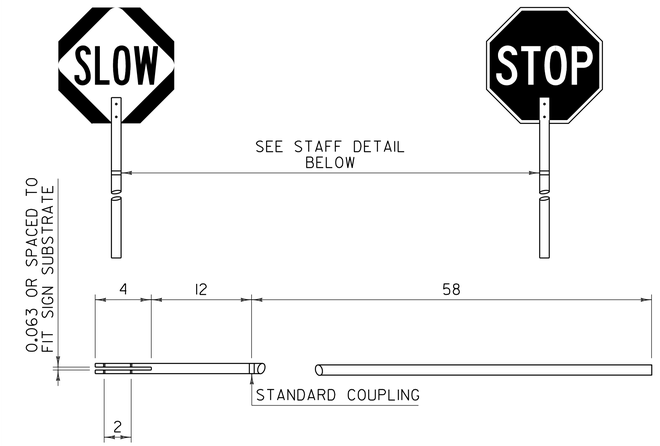

STOP–SLOW PADDLE & STAFF DETAIL

NOTES:

1. REFER TO THE "STANDARD HIGHWAY SIGNS AND MARKINGS" BOOK (SHSM) "TEMPORARY TRAFFIC CONTROL - WARNING SIGNS" FOR THE STOP-SLOW PADDLE DESIGN.
2. COLORS FOR THE SLOW SIDE OF THE PADDLE SHALL BE BLACK LEGEND AND BORDER ON A FLUORESCENT ORANGE DIAMOND WITH RETROREFLECTIVE SHEETING EQUAL TO OR EXCEEDING AASHTO M 268 [ASTM D 4956] TYPE VII, VIII OR IX REQUIREMENTS.
3. COLORS FOR THE STOP SIDE OF THE PADDLE SHALL BE WHITE RETROREFLECTIVE LEGEND AND BORDER ON A RED RETROREFLECTIVE OCTAGON. BOTH COLORS SHALL HAVE RETROREFLECTIVE SHEETING EQUAL TO OR EXCEEDING AASHTO M 268 [ASTM D 4956] TYPE III.
4. SIGN SUBSTRATE MATERIALS SHALL BE ALUMINUM, ACRYLONITRILE BUTADIENE STYRENE (ABS) PLASTIC OR EQUIVALENT.
5. THE STAFF MAY BE RIGID ABS PLASTIC OR WOOD WITH A ONE TO 1½ INCH DIAMETER.
6. SIGNS SHALL BE MAINTAINED IN A CLEAN AND LEGIBLE CONDITION SATISFACTORY TO THE ENGINEER. THEY SHALL BE COMPLETELY VISIBLE TO APPROACHING TRAFFIC AT ALL TIMES. THEY SHALL BE KEPT PLUMB AND LEVEL, AND ALWAYS PRESENT A NEAT APPEARANCE. DAMAGED, DEFACED OR DIRTY SIGNS SHALL BE REPAIRED, CLEANED OR REPLACED AS ORDERED BY THE ENGINEER.

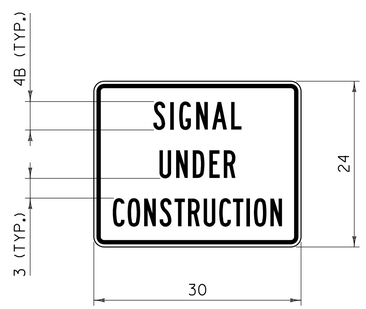

VC–820

NOTES:

1. CORNERS SHALL BE ROUNDED TO A 1½ INCH RADIUS.
2. THE BORDER SHALL BE ⅝ INCH WIDE WITH A ⅜ INCH INDENT FROM THE EDGE OF THE SIGN.
3. "SIGNAL" SHALL HAVE A SPECIFIED WIDTH OF 12 ¾ INCHES.
4. "UNDER" SHALL HAVE A SPECIFIED WIDTH OF 11 INCHES.
5. "CONSTRUCTION" SHALL HAVE A SPECIFIED WIDTH OF 24 ½ INCHES.
6. SIGN SHALL ONLY BE INSTALLED AS A SUPPLEMENTAL TO A PARENT WARNING SIGN AND SHALL NOT BE INSTALLED BY ITSELF.

GENERAL NOTES:

1. ALL LEGEND SHALL BE CENTERED VERTICALLY AND HORIZONTALLY UNLESS OTHERWISE NOTED.
2. COLORS FOR SIGNS SHALL BE BLACK LEGEND AND BORDER ON FLUORESCENT ORANGE BACKGROUND UNLESS OTHERWISE NOTED.
3. ALL DIMENSIONS IN INCHES.

OTHER STDS. REQUIRED: **T–1**

REVISIONS AND CORRECTIONS

AUG. 6, 2012 - ORIGINAL APPROVAL DATE

APPROVED

HIGHWAY SAFETY & DESIGN ENGINEER

DIRECTOR OF PROGRAM DEVELOPMENT

Mark D. Richter

FEDERAL HIGHWAY ADMINISTRATION

CONSTRUCTION SIGN DETAILS

VERMONT AGENCY OF TRANSPORTATION

STANDARD

T-30

DROP-OFF ADJACENT TO TRAVELED WAY

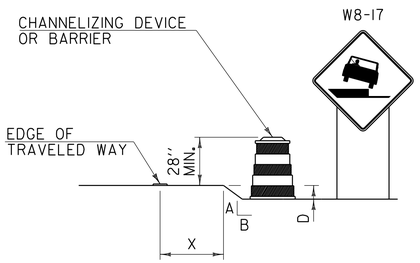

TYPE 1

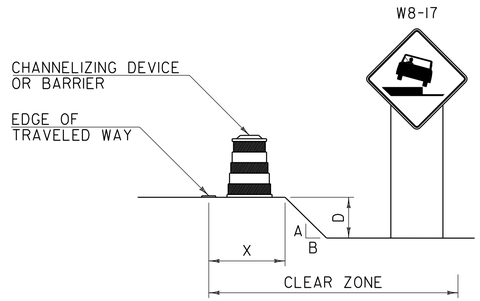

TYPE 2

NOTES:

1. CHANNELIZING DEVICES OR BARRIER SHOULD BE PLACED TO MAXIMIZE THE WIDTH OF THE TRAVELED WAY.
2. SEE CHART "A" FOR SPECIFIC REQUIREMENTS.
3. IF THE DROP-OFF REQUIRES CHANNELIZING DEVICES TO REMAIN IN PLACE OVERNIGHT, THEN "SHOULDER DROP-OFF SYMBOL" (W8-17) SIGNS SHOULD BE INSTALLED.

DROP-OFF BETWEEN ADJACENT TRAVELED LANES

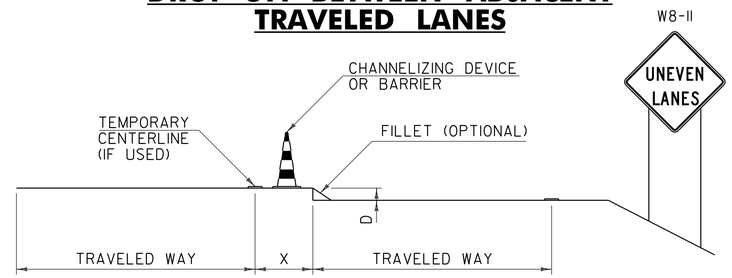

NOTES:

1. WHENEVER A LONGITUDINAL DROP-OFF BETWEEN ADJACENT TRAVELED LANES IS TO BE LEFT OVERNIGHT, THEN "UNEVEN LANES" (W8-11) SIGNS AND CHANNELIZING DEVICES SHOULD BE INSTALLED.
2. IF REQUIRED, THE CHANNELIZING DEVICES USED SHOULD BE THOSE WHICH MAXIMIZE THE WIDTH OF THE TRAVELED LANE (I.E. CONES, VERTICAL PANELS OR TUBULAR MARKERS).
3. A BITUMINOUS CONCRETE FILLET WITH A 1.5:1 SLOPE MAY BE USED IN PLACE OF CHANNELIZING DEVICES, HOWEVER THE "UNEVEN LANES" (W8-11) SIGNS SHOULD STILL BE INSTALLED.
4. SEE CHART "A" FOR SPECIFIC REQUIREMENTS.

DROP-OFF BEYOND SHOULDER OR CURB

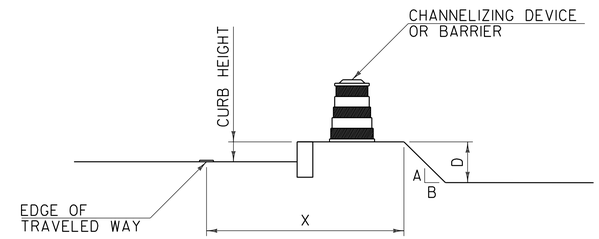

NOTES:

1. USE CHART "A" FOR VERTICAL CURBS UNDER SIX INCHES, MOUNTABLE CURBS OR ROADWAYS WITH A POSTED SPEED ABOVE 40 MPH.
2. USE CHART "B" FOR VERTICAL CURBS SIX INCHES OR GREATER.

CHART "A"
ALL SPEEDS WITH NO CURB OR MOUNTABLE CURB

X (FEET)	DROP (D) (INCHES)	A:B SLOPE	RECOMMENDED DEVICE
0 TO 4'	LESS THAN 2"	ANY	NONE
	2" TO 6"	1:1.5 OR FLATTER	NONE
		STEEPER THAN 1:1.5	CHANNELIZING DEVICE
	GREATER THAN 6"	1:3 OR FLATTER	NONE
		STEEPER THAN 1:3	BARRIER
4' TO 10'	LESS THAN 6"	ANY	NONE
	6" TO 12"	1:3 OR FLATTER	NONE
		STEEPER THAN 1:3	BARRIER
	GREATER THAN 12"	1:3 OR FLATTER	NONE
		STEEPER THAN 1:3	BARRIER
10' TO CZ	LESS THAN OR EQUAL TO 12"	ANY	NONE
	GREATER THAN 12"	1:3 OR FLATTER	NONE
		STEEPER THAN 1:3	BARRIER

NOTES:

1. THE MINIMUM CLEAR ZONE FOR FREEWAYS IS TO BE DETERMINED PER THE CURRENT AASHTO ROADSIDE DESIGN GUIDE. ALL OTHER HIGHWAYS WILL BE DETERMINED PER THE CURRENT "VERMONT STATE STANDARDS" BOOK.
2. CHANNELIZING DEVICES MAY BE USED INSTEAD OF BARRIER FOR SHORT TERM OPERATIONS.
3. ON BORDERLINE CONDITIONS, THE ENGINEER SHOULD DETERMINE WHICH TREATMENT IS ADEQUATE FOR THE EXISTING CONDITIONS.

CHART "B"
40 MPH OR LESS WITH VERTICAL CURB

X (FEET)	DROP (D) (INCHES)	DEVICE REQUIRED
0-10'	LESS THAN OR EQUAL TO 12"	NONE
0-10'	GREATER THAN 12"	CHANNELIZING DEVICE
GREATER THAN 10'	ANY	NONE

GENERAL NOTES:

1. THESE CONDITIONS AND TREATMENTS ARE ONLY PART OF THE TRAFFIC CONTROL SYSTEM AND SHOULD BE USED IN ADDITION TO THE PROPER WORK ZONE SIGNING.
2. THE FOLLOWING ARE "MANUAL ON UNIFORM TRAFFIC CONTROL DEVICES" (MUTCD) COMPLIANT CHANNELIZING DEVICES:

   A. VERTICAL PANEL
   B. TYPE I OR TYPE II BARRICADE
   C. PLASTIC DRUM
   D. CONE - WHERE APPLICABLE
   E. TUBULAR MARKERS

   IF CHANNELIZING DEVICES ARE REQUIRED TO STAY IN PLACE DURING NIGHTTIME HOURS, THEY SHALL BE STABILIZED WHILE UNATTENDED IN ACCORDANCE WITH THE MUTCD.
3. WHERE BARRIER IS NECESSARY, THE BARRIER SHALL BE TAPERED BEYOND THE CLEAR ZONE. WHEN THE BARRIER CANNOT BE TAPERED BEYOND THE CLEAR ZONE, A MUTCD COMPLIANT END TREATMENT SHALL BE USED. BARRIER AND END TREATMENT SHALL MEET "NATIONAL COOPERATIVE HIGHWAY RESEARCH PROGRAM" (NCHRP) REPORT 350 OR THE "AMERICAN ASSOCIATION OF STATE HIGHWAY AND TRANSPORTATION OFFICIALS" (AASHTO) "MANUAL FOR ASSESSING SAFETY HARDWARE" (MASH). THE APPROPRIATE RESOURCE SHALL BE DETERMINED AS DESCRIBED IN THE MASH PUBLICATION.
4. CHANNELIZING DEVICE SPACING ALONG A LONGITUDINAL DROP-OFF (TANGENT) SHALL BE AS FOLLOWS:

   TANGENT - CHANNELIZING DEVICES SHALL BE SPACED "2S" ("S" IS EQUAL TO THE POSTED SPEED LIMIT IN FEET) APART.
5. "LOW SHOULDER" (W8-9) AND "SHOULDER DROP-OFF SYMBOL" (W8-17) SIGNS, WHEN USED, SHOULD BEGIN PRIOR TO THE DROP-OFF CONDITION AND SHOULD BE REPEATED EVERY 1500 FEET.

OTHER STDS. REQUIRED: **T-1**

REVISIONS AND CORRECTIONS

AUG. 6, 2012 - ORIGINAL APPROVAL DATE

APPROVED

HIGHWAY SAFETY & DESIGN ENGINEER

DIRECTOR OF PROGRAM DEVELOPMENT

Mark D. Richter

FEDERAL HIGHWAY ADMINISTRATION

CONSTRUCTION ZONE LONGITUDINAL DROP-OFFS

VERMONT AGENCY OF TRANSPORTATION

STANDARD

T-35

DROP-OFF ADJACENT TO TRAVELED WAY

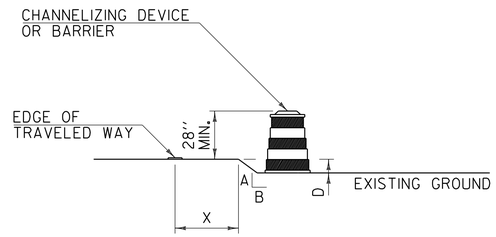

NOTES:

1. CHANNELIZING DEVICES SHOULD BE PLACED TO MAXIMIZE THE WIDTH OF THE TRAVELED WAY.
2. SEE CHART "A" FOR SPECIFIC REQUIREMENTS.
3. IF THE DROP-OFF REQUIRES CHANNELIZING DEVICES TO REMAIN IN PLACE OVERNIGHT, THEN "LOW SHOULDER" (W8-9) OR "SHOULDER DROP-OFF SYMBOL" (W8-17) SIGNS SHOULD BE INSTALLED.

DROP-OFF BETWEEN ADJACENT TRAVELED LANES

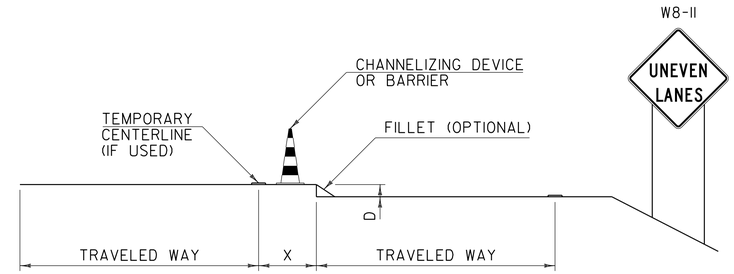

NOTES:

1. WHENEVER A LONGITUDINAL DROP-OFF BETWEEN ADJACENT TRAVELED LANES IS TO BE LEFT OVERNIGHT, THEN "UNEVEN LANES" (W8-11) SIGNS AND CHANNELIZING DEVICES SHOULD BE INSTALLED.
2. IF REQUIRED, THE CHANNELIZING DEVICES USED SHALL BE THOSE WHICH MAXIMIZE THE WIDTH OF THE TRAVELED LANE (I.E. CONES, VERTICAL PANELS OR TUBULAR MARKERS).
3. A BITUMINOUS CONCRETE FILLET WITH A 1.5:1 SLOPE MAY BE USED IN PLACE OF CHANNELIZING DEVICES, HOWEVER THE "UNEVEN LANES" (W8-11) SIGNS SHOULD STILL BE INSTALLED.
4. SEE CHART "A" FOR SPECIFIC REQUIREMENTS.

CHART "A"
ALL SPEEDS WITH NO CURB

X (FEET)	DROP (D) (INCHES)	A:B SLOPE	DEVICE REQUIRED
0 TO 4'	LESS THAN 2"	ANY	NONE
	2" TO 6"	1:1.5 OR FLATTER	NONE
		STEEPER THAN 1:1.5	CHANNELIZING DEVICE
	GREATER THAN 6"	1:3 OR FLATTER	NONE
		STEEPER THAN 1:3	BARRIER
4' TO 10'	LESS THAN 6"	ANY	NONE
	6" TO 12"	1:3 OR FLATTER	NONE
		STEEPER THAN 1:3	BARRIER

NOTE:

1. ON BORDERLINE CONDITIONS, THE ENGINEER SHOULD DETERMINE WHICH TREATMENT IS ADEQUATE FOR THE EXISTING CONDITIONS.

GENERAL NOTES:

1. THESE CONDITIONS AND TREATMENTS ARE ONLY PART OF THE TRAFFIC CONTROL SYSTEM AND SHOULD BE USED IN ADDITION TO THE PROPER WORK ZONE SIGNING.
2. THE FOLLOWING ARE "MANUAL ON UNIFORM TRAFFIC CONTROL DEVICES" (MUTCD) COMPLIANT CHANNELIZING DEVICES:

   A. VERTICAL PANEL
   B. TYPE I OR TYPE II BARRICADE
   C. PLASTIC DRUM
   D. CONE - WHERE APPLICABLE
   E. TUBULAR MARKERS

   IF CHANNELIZING DEVICES ARE REQUIRED TO STAY IN PLACE DURING NIGHTTIME HOURS, THEY SHALL BE STABILIZED WHILE UNATTENDED IN ACCORDANCE WITH THE MUTCD.
3. WHERE BARRIER IS NECESSARY, THE BARRIER SHALL BE TAPERED BEYOND THE CLEAR ZONE. WHEN THE BARRIER CANNOT BE TAPERED BEYOND THE CLEAR ZONE, A MUTCD COMPLIANT END TREATMENT SHALL BE USED. BARRIER AND END TREATMENT SHALL MEET "NATIONAL COOPERATIVE HIGHWAY RESEARCH PROGRAM" (NCHRP) REPORT 350 OR THE "AMERICAN ASSOCIATION OF STATE HIGHWAY AND TRANSPORTATION OFFICIALS" (AASHTO) "MANUAL FOR ASSESSING SAFETY HARDWARE" (MASH). THE APPROPRIATE RESOURCE SHALL BE DETERMINED AS DESCRIBED IN THE MASH PUBLICATION.
4. CHANNELIZING DEVICE SPACING ALONG A LONGITUDINAL DROP-OFF (TANGENT) SHALL BE AS FOLLOWS:

   TANGENT - CHANNELIZING DEVICES SHALL BE SPACED "2S" ("S" IS EQUAL TO THE POSTED SPEED LIMIT IN FEET) APART.
5. "LOW SHOULDER" (W8-9) AND "SHOULDER DROP-OFF SYMBOL" (W8-17) SIGNS, WHEN USED, SHOULD BEGIN PRIOR TO THE DROP-OFF CONDITION AND SHOULD BE REPEATED EVERY 1500 FEET.

OTHER STDS. REQUIRED: T-1

REVISIONS AND CORRECTIONS

AUG. 6, 2012 - ORIGINAL APPROVAL DATE

APPROVED

HIGHWAY SAFETY & DESIGN ENGINEER

DIRECTOR OF PROGRAM DEVELOPMENT

Mark D. Richter

FEDERAL HIGHWAY ADMINISTRATION

CONSTRUCTION ZONE LONGITUDINAL DROP-OFFS FOR PAVING

VERMONT AGENCY OF TRANSPORTATION

STANDARD

T-36