# STATE OF VERMONT
# AGENCY OF TRANSPORTATION

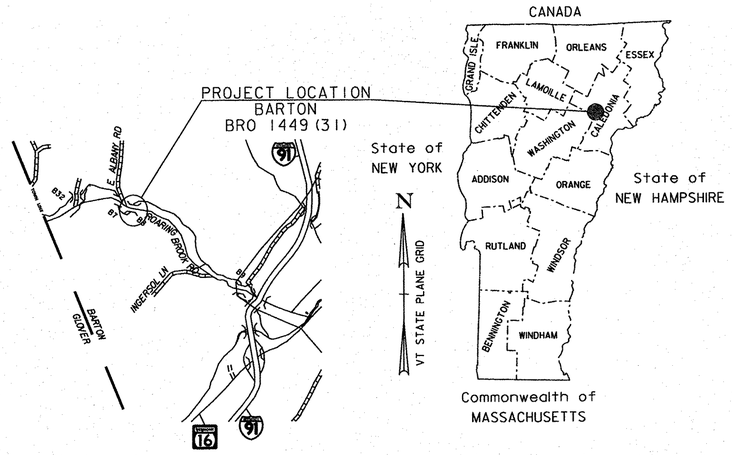


LOCATION MAP
NOT TO SCALE

# PROPOSED IMPROVEMENT

# BRIDGE PROJECT
# TOWN OF BARTON
# COUNTY OF ORLEANS

## ROARING BROOK ROAD (TH #2) (RURAL MINOR COLLECTOR) BRIDGE NO. 8

PROJECT LOCATION: LOCATED IN THE TOWN OF BARTON, ON ROARING BROOK RD (TH #2), APPROXIMATELY 0.767 MILES EASTERLY OF THE GLOVER/BARTON TOWN LINE AND EXTENDING APPROXIMATELY 500 FEET TO THE END.

PROJECT DESCRIPTION: WORK TO BE PERFORMED UNDER THIS PROJECT INCLUDES REPLACEMENT OF THE EXISTING STRUCTURE WITH A NEW STRUCTURE INCLUDING RELATED ROADWAY AND CHANNEL WORK.

LENGTH OF ROADWAY: 452.34 FEET
LENGTH OF STRUCTURE: 47.66 FEET
LENGTH OF PROJECT: 500.00 FEET

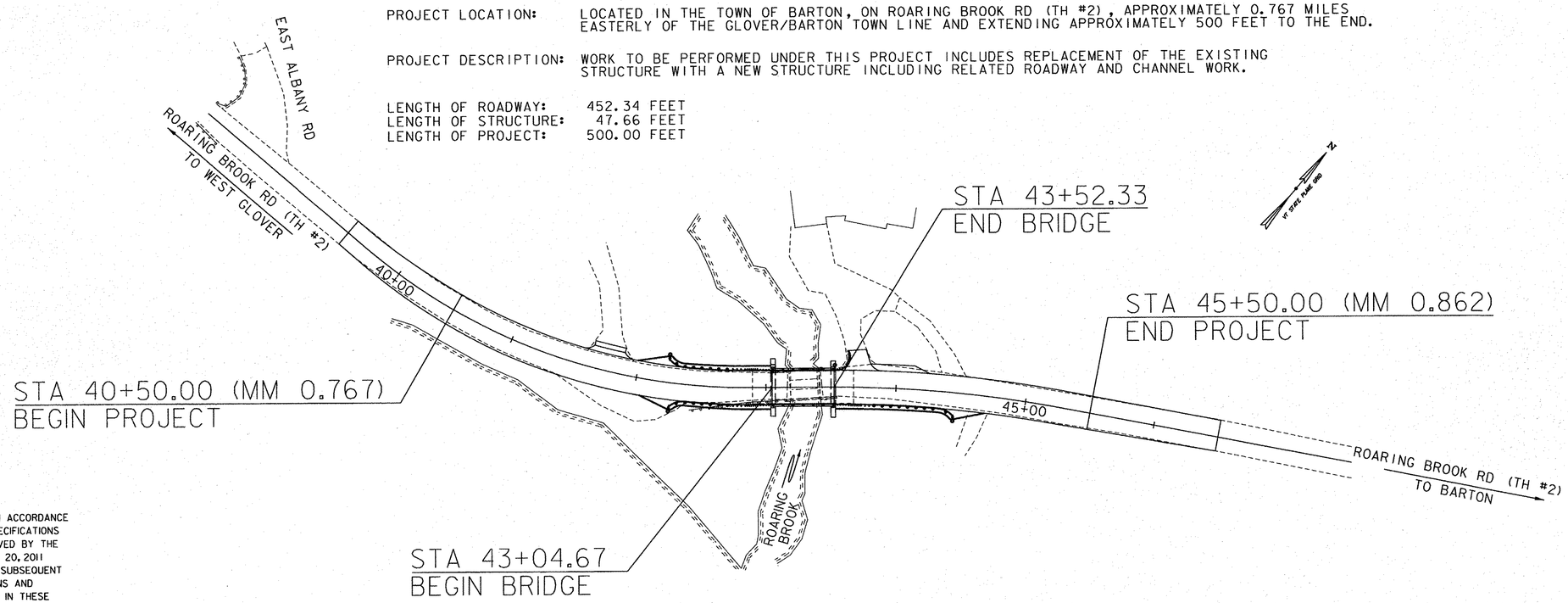


CONSTRUCTION IS TO BE CARRIED ON IN ACCORDANCE WITH THESE PLANS AND THE STANDARD SPECIFICATIONS FOR CONSTRUCTION DATED 2011, AS APPROVED BY THE FEDERAL HIGHWAY ADMINISTRATION ON JULY 20, 2011 FOR USE ON THIS PROJECT, INCLUDING ALL SUBSEQUENT REVISIONS AND SUCH REVISED SPECIFICATIONS AND SPECIAL PROVISIONS AS ARE INCORPORATED IN THESE PLANS.

QUALITY ASSURANCE PROGRAM : LEVEL 2

SURVEYED BY : VTRANS
SURVEYED DATE : 8/11/2011

DATUM
VERTICAL NAVD 88
HORIZONTAL NAD 83 (96)

0 50 100
SCALE IN FEET

STATE OF VERMONT — CHRISTOPHER A. BEAM — No. 8529 — REGISTERED PROFESSIONAL ENGINEER

STATE OF VERMONT — JOHN P. BYATT — NO. 8478 — Structural I — LICENSED PROFESSIONAL ENGINEER

CONSULTING ENGINEERS
540 Commercial Street
Manchester, NH 03101
(603) 668-8223
www.cldengineers.com

DIRECTOR OF PROJECT DELIVERY
APPROVED _____ DATE 12/19/2014

PROJECT MANAGER : TODD SUMNER, P.E.

PROJECT NAME : BARTON
PROJECT NUMBER : BRO 1449(31)

SHEET 1 OF 52 SHEETS

CLD 12-0174

STATE OF VERMONT
AGENCY OF TRANSPORTATION

# PRELIMINARY INFORMATION SHEET (BRIDGE)

Version 11.06.15

**LRFD**

## INDEX OF SHEETS

### PLAN SHEETS

| | |
|---|---|
| 1 | TITLE SHEET |
| 2 | PRELIMINARY INFORMATION SHEET |
| 3 | TYPICAL BRIDGE SECTION |
| 4 - 5 | TYPICAL ROADWAY SECTIONS |
| 6 | TYPICAL EARTHWORK SECTIONS |
| 7 - 8 | PROJECT NOTES |
| 9 - 11 | QUANTITY SHEETS |
| 12 | BRIDGE QUANTITY SHEET |
| 13 | CONVENTIONAL SYMBOLOGY LEGEND SHEET |
| 14 - 15 | TIE SHEETS |
| 16 | LAYOUT SHEET |
| 17 - 18 | PROFILE AND BANKING DIAGRAM SHEETS |
| 19 | TRAFFIC CONTROL SHEET |
| 20 | TRAFFIC SIGN SUMMARY SHEET |
| 21 | SIGN DETAIL SHEET |
| 22 | BORING INFORMATION SHEET |
| 23 - 26 | BORING LOGS |
| 27 | PLAN AND ELEVATION |
| 28 | BRIDGE PLAN AND TYPICAL SECTIONS |
| 29 - 31 | NEXT BEAM DETAILS |
| 32 | BEARING DETAILS |
| 33 | ABUTMENT 1 PLAN |
| 34 | ABUTMENT 1 REINFORCING |
| 35 | ABUTMENT 2 PLAN |
| 36 | ABUTMENT 2 REINFORCING |
| 37 | BEAM-END CLOSURE POUR REINFORCING |
| 38 | APPROACH SLAB DETAILS |
| 39 | RAIL AND CURB LAYOUT SHEET |
| 40 | REINFORCING STEEL SCHEDULE |
| 41 - 44 | ROADWAY CROSS SECTIONS |
| 45 - 46 | CHANNEL CROSS SECTIONS |
| 47 | EROSION CONTROL NARRATIVE |
| 48 - 50 | EPSC PLAN SHEETS |
| 51 - 52 | EPSC DETAILS |

### STRUCTURES DETAILS

| | | |
|---|---|---|
| SD-501.00 | CONCRETE DETAILS AND NOTES | 02-09-2012 |
| SD-502.00 | CONCRETE DETAILS AND NOTES | 10-10-2012 |
| SD-516.10 | BRIDGE ASPHALTIC PLUG | 08-29-2011 |

### STANDARDS LIST

| | | |
|---|---|---|
| B-5 | SLOPE GRADING, EMBANKMENTS, MUCK | 06-01-1994 |
| B-17 | GUARDRAIL, BRIDGES, REST AREA, TURNOUTS | 02-23-1995 |
| B-71 | STANDARD FOR RESIDENTIAL AND COMMERCIAL DRIVES | 07-08-2005 |
| E-121 | STANDARD SIGN PLACEMENT - CONVENTIONAL ROAD | 08-08-1995 |
| E-193 | PAVEMENT MARKING DETAILS | 08-18-1995 |
| G-1 | STEEL BEAM GUARDRAIL DETAILS (POST, DELINEATOR, TYPICALS) | 01-03-2000 |
| G-1D | STEEL BEAM GUARDRAIL DETAILS (END TERMINAL, ANCHOR, MEDIAN) | 01-03-2000 |
| J-3 | MAIL BOX SUPPORT DETAILS | 08-07-1995 |
| S-360a | BRIDGE RAILING, GALVANIZED NETC 2 RAIL | 04-23-2012 |
| S-360b | GUARDRAIL APPROACH SECTION, GALVANIZED NETC 2 RAIL | 04-23-2012 |
| T-40 | DELINEATORS AND MILEPOSTS | 01-02-2013 |
| T-42 | BRIDGE NUMBER PLAQUE | 04-09-2014 |
| T-45 | SQUARE TUBE SIGN POST AND ANCHOR | 01-02-2013 |

## FINAL HYDRAULIC REPORT

### HYDROLOGIC DATA

Date: 10/24/13

DRAINAGE AREA : 10.0 SQ. MI.
CHARACTER OF TERRAIN : HILLY TO MOUNTAINOUS
STREAM CHARACTERISTICS : SINUOUS, NON-ALLUVIAL, AND PERENNIAL CHANNEL
NATURE OF STREAMBED : GRAVEL AND COBBLES WITH BOULDERS

PEAK FLOW DATA

| | | | |
|---|---|---|---|
| Q 2.33 = | 500 CFS | Q 50 = | 1380 CFS |
| Q 10 = | 900 CFS | Q 100 = | 1610 CFS |
| Q 25 = | 1150 CFS | Q 500 = | 2090 CFS |

DATE OF FLOOD OF RECORD: UNKNOWN
ESTIMATED DISCHARGE: N/A
WATER SURFACE ELEV.: N/A
NATURAL STREAM VELOCITY : @ Q25 = 11.7 FPS
ICE CONDITIONS : MODERATE
DEBRIS: MODERATE
DOES THE STREAM REACH MAXIMUM HIGHWATER ELEV. RAPIDLY? NO
IS ORDINARY RISE RAPID? NO
IS STAGE AFFECTED BY UPSTREAM OR DOWNSTREAM CONDITIONS? NO
IF YES, DESCRIBE:

WATERSHED STORAGE: 4%
HEADWATERS:
UNIFORM: X
IMMEDIATELY ABOVE SITE:

### EXISTING STRUCTURE INFORMATION

STRUCTURE TYPE: CONCRETE T-BEAM WITH REINFORCED CONCRETE ABUTMENTS
YEAR BUILT: 1928
CLEAR SPAN(NORMAL TO STREAM): 26 FT
VERTICAL CLEARANCE ABOVE STREAMBED: 7.3 FT
WATERWAY OF FULL OPENING: 166 SQ. FT.
DISPOSITION OF STRUCTURE: REMOVE AND REPLACE
TYPE OF MATERIAL UNDER SUBSTRUCTURE: SEE BORINGS

WATER SURFACE ELEVATIONS AT:

| | | | |
|---|---|---|---|
| Q2.33 = | 1132.5 FT | VELOCITY = | 7.4 FPS |
| Q10 = | 1133.5 FT | " | 10.7 FPS |
| Q25 = | 1135.4 FT | " | 10.4 FPS |
| Q50 = | 1136.3 FT | " | 11.2 FPS |
| Q100 = | 1137.2 FT | " | 12.1 FPS |

LONG TERM STREAMBED CHANGES: MINIMAL DUE TO LARGE SIZE OF STREAMBED MATERIAL

IS THE ROADWAY OVERTOPPED BELOW Q100: NO
FREQUENCY: N/A
RELIEF ELEVATION: 1139.4 FT
DISCHARGE OVER ROAD @Q100: N/A

### UPSTREAM STRUCTURE

| | | | |
|---|---|---|---|
| TOWN: | BARTON | DISTANCE: | 0.2 MI. |
| HIGHWAY # : | TH #2 ROARING BROOK RD | STRUCTURE #: | 7 |
| CLEAR SPAN: | 18 FT | CLEAR HEIGHT: | 6 FT |
| YEAR BUILT: | UNKNOWN | FULL WATERWAY: | 108 FT |
| STRUCTURE TYPE: | UNKNOWN | | |

### DOWNSTREAM STRUCTURE

| | | | |
|---|---|---|---|
| TOWN: | BARTON | DISTANCE: | 0.9 MI. |
| HIGHWAY # : | TH NO. 2 | STRUCTURE #: | 9 |
| CLEAR SPAN: | 36 FT | CLEAR HEIGHT: | 6 FT |
| YEAR BUILT: | 1928 | FULL WATERWAY: | 178 FT |
| STRUCTURE TYPE: | CONCRETE T-BEAM | | |

### PROPOSED STRUCTURE

STRUCTURE TYPE: CONCRETE NEXT BEAM STRUCTURE ON INTEGRAL ABUTMENTS

CLEAR SPAN(NORMAL TO STREAM): 42 FT
VERTICAL CLEARANCE ABOVE STREAMBED: 7.5 FT
WATERWAY OF FULL OPENING: 213 SQ. FT.

WATER SURFACE ELEVATIONS AT:

| | | | |
|---|---|---|---|
| Q2.33 = | 1132.2 FT | VELOCITY= | 8.5 FPS |
| Q10 = | 1133.6 FT | " | 9.9 FPS |
| Q25 = | 1134.3 FT | " | 11.7 FPS |
| Q50 = | 1134.9 FT | " | 12.4 FPS |
| Q100 = | 1135.4 FT | " | 12.9 FPS |

IS THE ROADWAY OVERTOPPED BELOW Q100: NO
FREQUENCY: N/A
RELIEF ELEVATION: 1139.7 FT
DISCHARGE OVER ROAD @Q100: N/A

AVERAGE LOW ELEVATION OF SUPERSTRUCTURE: 1135.4 FT
VERTICAL CLEARANCE: @ Q25 = 1.1 FT

SCOUR: CONTRACTION SCOUR 1 FT @ Q500

REQUIRED CHANNEL PROTECTION: TYPE IV STONE FILL

### PERMIT INFORMATION

| | | |
|---|---|---|
| AVERAGE DAILY FLOW: | 120 CFS | DEPTH OR ELEVATION: |
| ORDINARY LOW WATER: | 55 CFS | 1129.9 FT |
| ORDINARY HIGH WATER: | 200 CFS | 1130.8 FT |

### TEMPORARY BRIDGE REQUIREMENTS

STRUCTURE TYPE: NO TEMPORARY STRUCTURE
CLEAR SPAN (NORMAL TO STREAM): N/A
VERTICAL CLEARANCE ABOVE STREAMBED: N/A
WATERWAY AREA OF FULL OPENING: N/A

### ADDITIONAL INFORMATION

### TRAFFIC MAINTENANCE NOTES

1. MAINTAIN TRAFFIC ON AN OFF SITE DETOUR.
2. TRAFFIC SIGNALS ARE NOT NECESSARY.
3. SIDEWALKS ARE NOT NECESSARY

### DESIGN VALUES

| | | |
|---|---|---|
| 1. DESIGN LIVE LOAD | | HL-93 |
| 2. FUTURE PAVEMENT | $d_p$: | 0.0 INCH |
| 3. DESIGN SPAN | $L$: | 45.00 FT |
| 4. MIN. MID-SPAN POS. CAMBER @ RELEASE (PRESTRESSED UNITS) | $\Delta$: | 0.71 INCH |
| 5. PRESTRESSING STRAND (0.60 INCH DIAMETER - LOW RELAX) | $f_y$: | 270 KSI |
| 6. PRESTRESSED CONCRETE STRENGTH | $f'_c$: | 6.0 KSI |
| 7. PRESTRESSED CONCRETE RELEASE STRENGTH | $f'_{ci}$: | 4.0 KSI |
| 8. CONCRETE, HIGH PERFORMANCE CLASS AA | $f'_c$: | --- |
| 9. CONCRETE, HIGH PERFORMANCE CLASS A | $f'_c$: | 4.0 KSI |
| 10. CONCRETE, HIGH PERFORMANCE CLASS B | $f'_c$: | --- |
| 11. CONCRETE, CLASS C | $f'_c$: | --- |
| 12. REINFORCING STEEL | $f_y$: | 60 KSI |
| 13. STRUCTURAL STEEL AASHTO M270 | $f_y$: | --- |
| 14. SOIL UNIT WEIGHT | $\gamma$: | 0.120 KCF |
| 15. NOMINAL BEARING RESISTANCE OF SOIL | $q_n$: | --- |
| 16. SOIL BEARING RESISTANCE FACTOR (REFER TO AASHTO LRFD) | $\phi$: | --- |
| 17. NOMINAL BEARING RESISTANCE OF ROCK | $q_n$: | --- |
| 18. ROCK BEARING RESISTANCE FACTOR (REFER TO AASHTO LRFD) | $\phi$: | --- |
| 19. NOMINAL AXIAL PILE RESISTANCE | $q_p$: | 283.0 KIPS |
| 20. PILE YIELD STRENGTH ASTM A572 | $f_y$: | 50 KSI |
| 21. PILE SIZE | | HP 12X63 |
| 22. EST. PILE LENGTH AT ABUTMENT #1 | $L_{p1}$ | 72 FT |
| EST. PILE LENGTH AT ABUTMENT #2 | $L_{p2}$ | 71 FT |
| 23. PILE RESISTANCE FACTOR | $\phi$: | 0.50 |
| 24. LATERAL PILE DEFLECTION | $\Delta$: | 0.16 INCH |
| 25. BASIC WIND SPEED | $V_{3s}$: | --- |
| 26. MINIMUM GROUND SNOW LOAD | $p_g$: | --- |
| 27. SEISMIC DATA PGA: 8 %g | $S_s$: | 18 %g |
| | $S_1$: | 6 %g |

### LRFR LOAD RATING FACTORS

| LOADING LEVELS | TRUCK | | | | | | |
|---|---|---|---|---|---|---|---|
| | H-20 | HL-93 | 3S2 | 6 AXLE | 3A. STR. | 4A. STR. | 5A. SEMI |
| TONNAGE | 20 | 36 | 36 | 66 | 30 | 34.5 | 38 |
| INVENTORY | 1.58 | 1.38 | | | | | |
| POSTING | | | | | | | |
| OPERATING | 1.97 | 1.79 | 2.07 | 1.09 | 1.44 | 1.32 | 1.7 |
| COMMENTS: | | | | | | | |

AS BUILT "REBAR" DETAIL

| LEVEL I | LEVEL II | LEVEL III |
|---|---|---|
| TYPE: | TYPE: | TYPE: |
| GRADE: | GRADE: | GRADE: |

### TRAFFIC DATA

| YEAR | ADT | DHV | % D | % T | ADTT | |
|---|---|---|---|---|---|---|
| 2014 | 920 | 100 | 64 | 2.6 | 25 | 20 year ESAL for flexible pavement from 2014 to 2034 : 188000 |
| 2034 | 980 | 110 | 64 | 3.4 | 35 | 40 year ESAL for flexible pavement from 2014 to 2054 : 440000 |
| | | | | | | Design Speed : 50 mph |

### PILE DRIVING AND TESTING REQUIREMENTS

| | | |
|---|---|---|
| 1. NOMINAL PILE DRIVING CAPACITY | Rndr: | 218.00 KIP |
| 2. PILE TEST RESISTANCE FACTOR | $\phi$: | 0.65 |
| 3. MAXIMUM PILE TIP ELEVATION | | SEE BORINGS |

PROJECT NAME: BARTON
PROJECT NUMBER: BRO 1449(31)

FILE NAME: z11j068pi.dgn
PROJECT LEADER: J. BYATT
DESIGNED BY: S. BEAUMONT
PRELIMINARY INFORMATION SHEET

PLOT DATE: 12/17/2014
DRAWN BY: M. HALEY
CHECKED BY: J. BYATT
SHEET 2 OF 52

MODEL: PI
CLD 12-0121

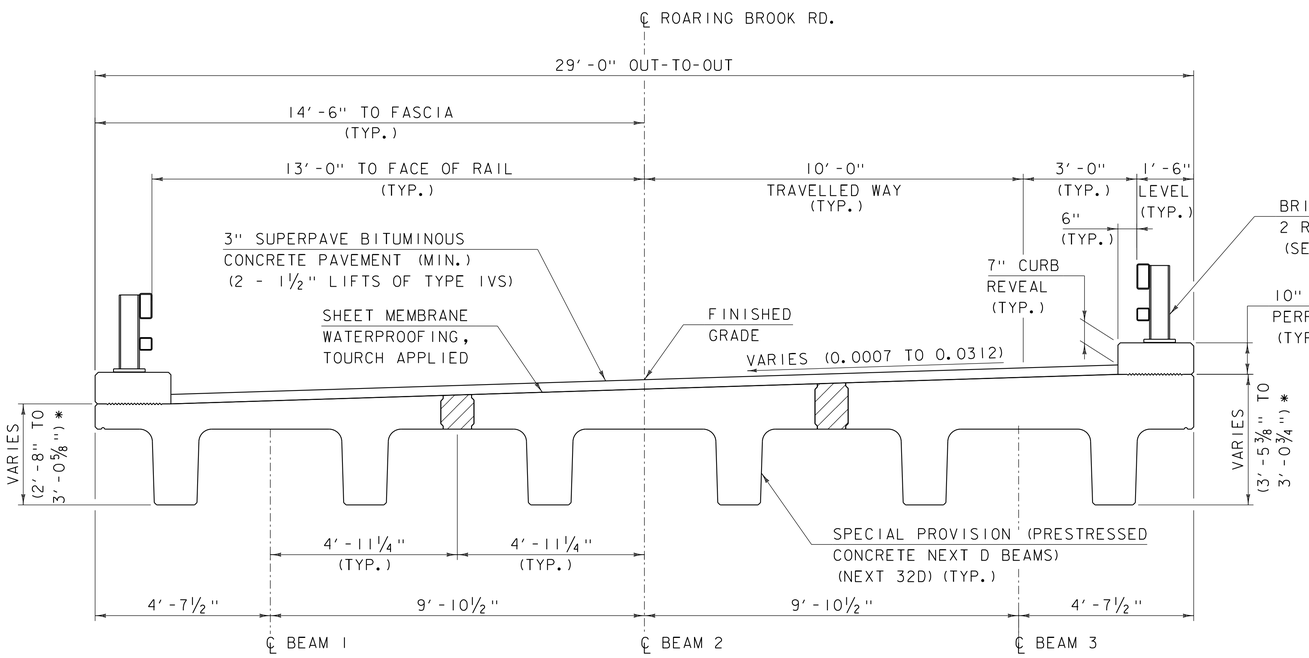


## TYPICAL BRIDGE SECTION

SCALE: ½" = 1'-0"

* DIMENSIONS TAKEN AT BEGIN AND END BEAM FLANGE AT ABUTMENT 1 AND 2, RESPECTIVELY.

SPECIAL PROVISION (HIGH PERFORMANCE CONCRETE, RAPID SET) (FPQ)

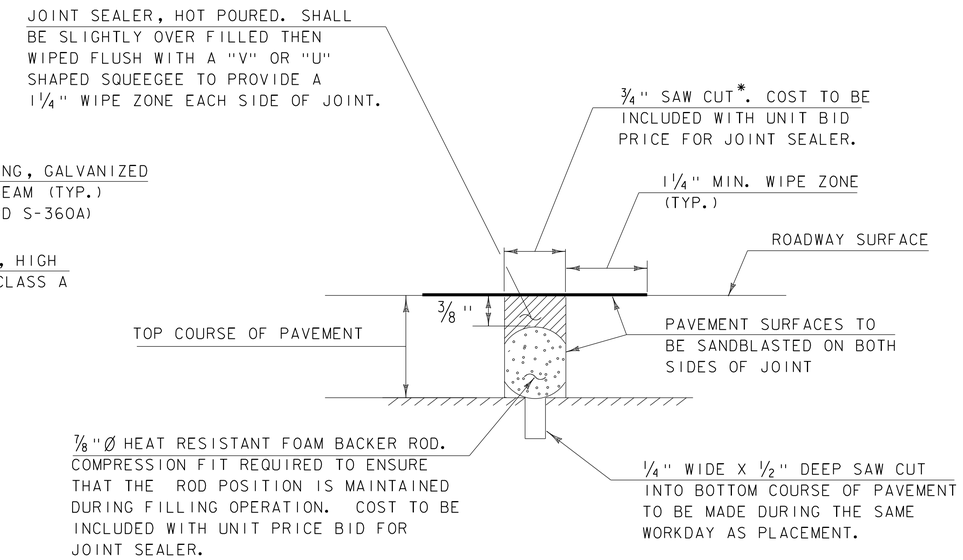


## SAWED PAVEMENT JOINT DETAIL

(NOT TO SCALE)

* JOINT IS TO BE LOCATED ACCURATELY BY STRING LINING, OR OTHER MEANS, PRIOR TO PAVING, SO THAT THE SAW CUTS WILL BE MADE DIRECTLY OVER THE END OF CONCRETE DECK. JOINT SHALL BE CUT DRY IN A SINGLE PASS AND BE SEALED WITHIN 24 HOURS OR PRIOR TO EXPOSURE TO TRAFFIC. JOINT SHALL BE CLEANED PRIOR TO APPLYING THE JOINT SEALER. ALL WORK SHALL BE PAID UNDER ITEM 524.11, "JOINT SEALER, HOT POURED".

| | |
|---|---|
| PROJECT NAME: BARTON | |
| PROJECT NUMBER: BRO 1449(31) | |
| FILE NAME: 11j068/cos/z11j068sup.dgn | PLOT DATE: 12/17/2014 |
| PROJECT LEADER: J. BYATT | DRAWN BY: M. SMITH |
| DESIGNED BY: S. BEAUMONT | CHECKED BY: J. BYATT |
| TYPICAL BRIDGE SECTION | SHEET 3 OF 52 |

CONSULTING ENGINEERS

CLD 12-0174 MODEL: SUP01

| MATERIAL TOLERANCES (IF USED ON PROJECT) | |
|---|---|
| SURFACE | |
| - PAVEMENT (TOTAL THICKNESS) | +/- 1/4" |
| - AGGREGATE SURFACE COURSE | +/- 1/2" |
| SUBBASE | +/- 1" |
| SAND BORROW | +/- 1" |

3" SUPERPAVE BITUMINOUS CONCRETE PAVEMENT (2-1 1/2" LIFTS) (TYPE 1VS)
2" SUPERPAVE BITUMINOUS CONCRETE PAVEMENT TYPE 111S
18" SUBBASE OF DENSE GRADED CRUSHED STONE/OR SUBBASE OF CRUSHED GRAVEL, COARSE GRADED
12" SAND BORROW

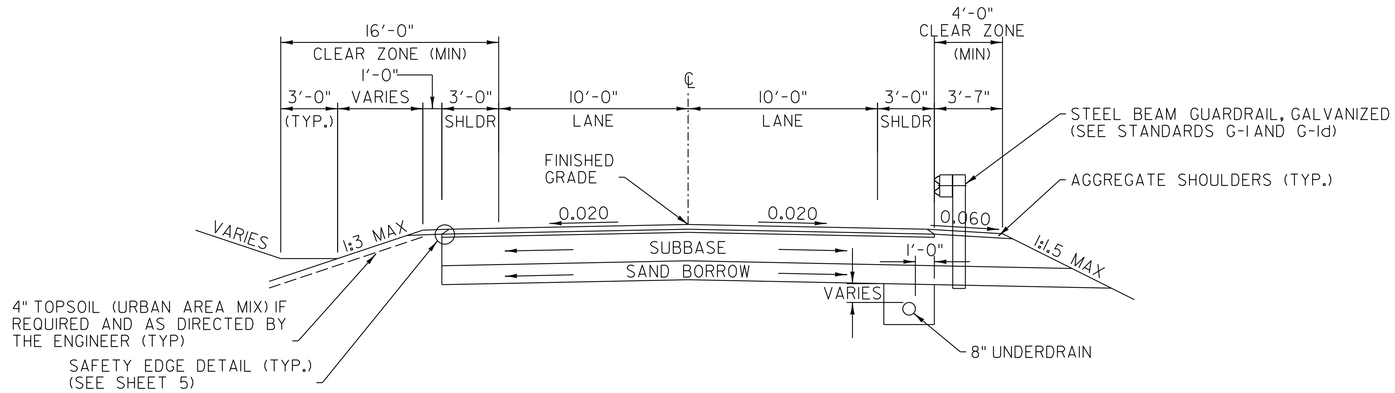


ROARING BROOK ROAD
NORMAL SECTION

SCALE: 1/4" = 1'-0"

3" SUPERPAVE BITUMINOUS CONCRETE PAVEMENT (2-1 1/2" LIFTS) (TYPE 1VS)
2" SUPERPAVE BITUMINOUS CONCRETE PAVEMENT TYPE 111S
18" SUBBASE OF DENSE GRADED CRUSHED STONE/OR SUBBASE OF CRUSHED GRAVEL, COARSE GRADED
12" SAND BORROW

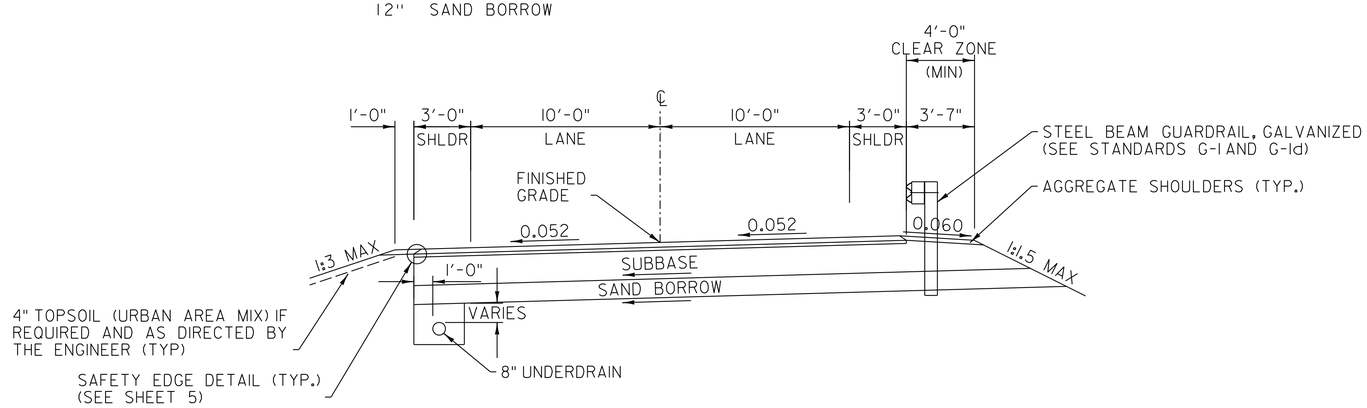


ROARING BROOK ROAD
MAXIMUM BANKED SECTION

SCALE: 1/4" = 1'-0"

CLD 12-0174 MODEL: TYP01

| | |
|---|---|
| PROJECT NAME: BARTON | |
| PROJECT NUMBER: BRO 1449(31) | |
| FILE NAME: 11j068/cos/z11j068frm.dgn | PLOT DATE: 12/17/2014 |
| PROJECT LEADER: J. BYATT | DRAWN BY: W. GORDON |
| DESIGNED BY: M. HALEY | CHECKED BY: P. SHEDD |
| TYPICAL ROADWAY SECTIONS SHEET 1 | SHEET 4 OF 52 |

CONSULTING ENGINEERS

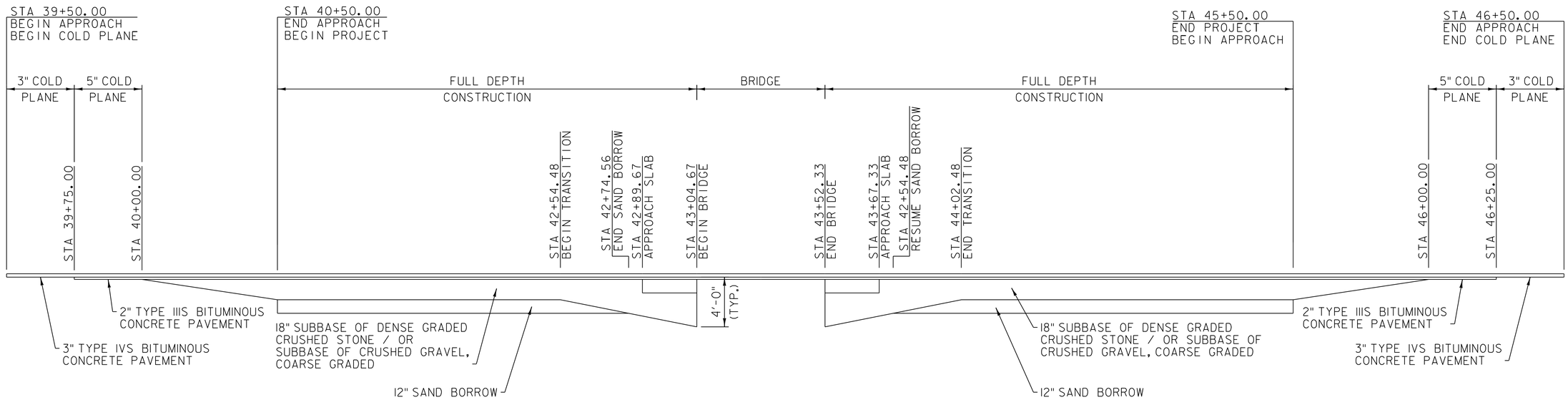


MATERIAL TRANSITION DIAGRAM

NOT TO SCALE

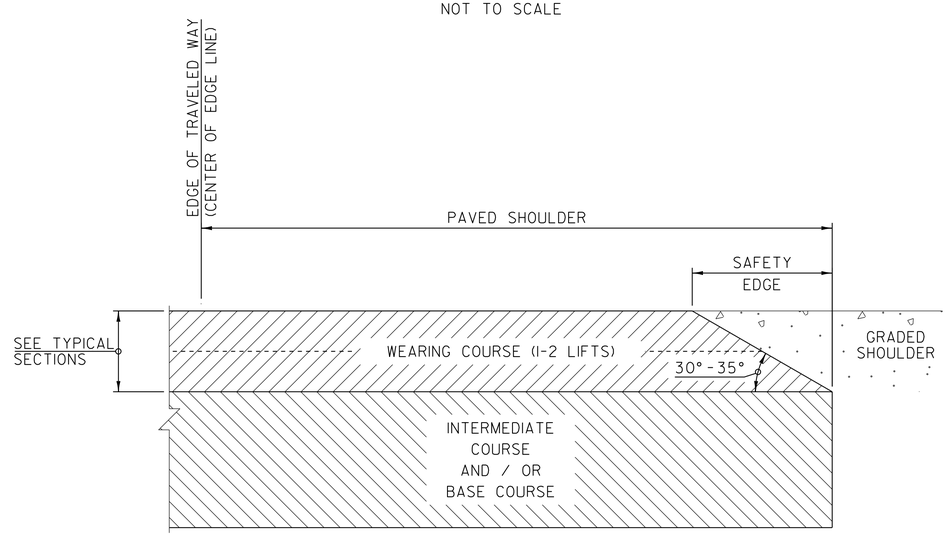


SAFETY EDGE DETAIL

SAFETY EDGE NOTES

1. THE EDGE OF PAVEMENT SHALL BE FORMED IN SUCH A WAY THAT THE BITUMINOUS CONCRETE PAVEMENT IS EXTRUDED OR COMPRESSED TO FORM THE 30 TO 35 DEGREE ANGLE. DEVICES THAT SIMPLY STRIKE-OFF THE MIX WITHOUT PROVIDING ANY COMPACTIVE EFFORT WILL NOT BE ALLOWED.

2. THE PAVED SHOULDER EXTENDS FROM THE EDGE OF TRAVELED WAY TO THE EDGE OF THE WEARING COURSE, INCLUDING THE "SAFETY EDGE".

| | |
|---|---|
| PROJECT NAME: BARTON | |
| PROJECT NUMBER: BRO 1449(31) | |
| FILE NAME: 11j068/cos/z11j068frm.dgn | PLOT DATE: 12/17/2014 |
| PROJECT LEADER: J. BYATT | DRAWN BY: S. GOODWIN |
| DESIGNED BY: M. HALEY | CHECKED BY: P. SHEDD |
| TYPICAL ROADWAY SECTIONS SHEET 2 | SHEET 5 OF 52 |

CLD 12-0174 MODEL: TYP02

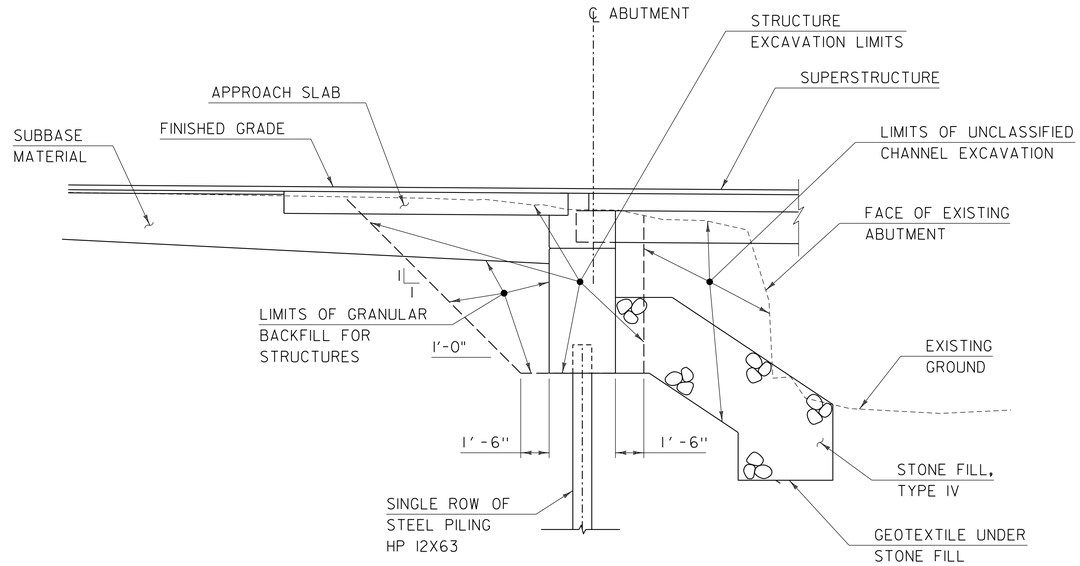


## TYPICAL ABUTMENT EARTHWORKS SECTION

SCALE: 1/4" = 1'-0"

1. ACTUAL EXCAVATION LIMITS SHALL BE DETERMINED BY THE CONTRACTOR. HOWEVER, ONLY THE STRUCTURE EXCAVATION BETWEEN THE LIMITS SHOWN WILL BE PAID FOR UNDER ITEM 204.25 "STRUCTURE EXCAVATION". ALL NECESSARY EXCAVATION OUTSIDE OF THESE LIMITS SHALL BE PAID FOR UNDER ITEM 203.27, "UNCLASSIFIED CHANNEL EXCAVATION".

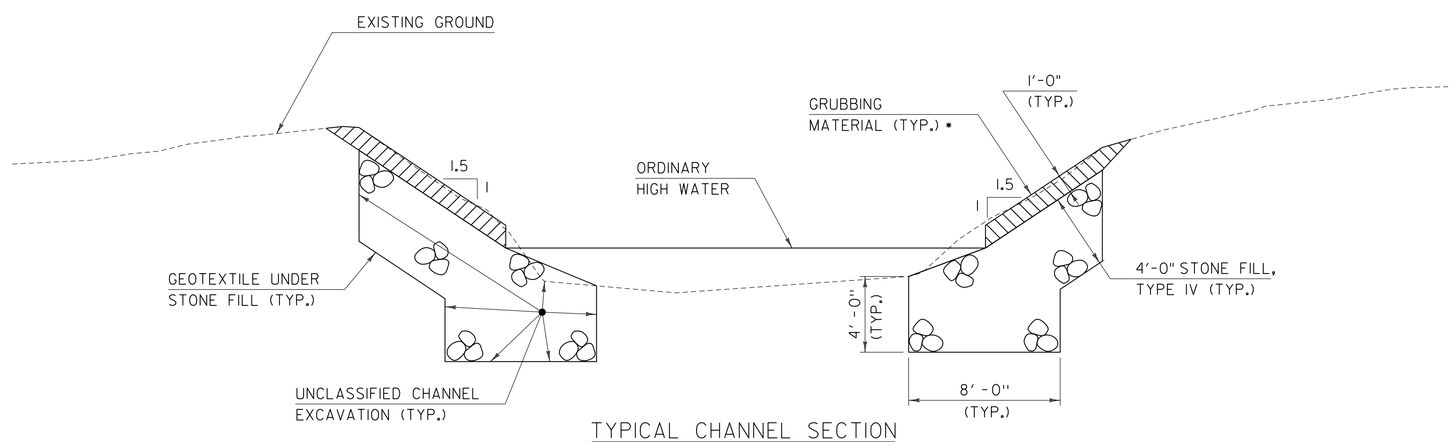


## TYPICAL CHANNEL SECTION

SCALE: 1/4" = 1'-0"

* WHENEVER CHANNEL SLOPE INTERSECTS ROADWAY SUBBASE, GRUBBING MATERIAL SHALL BEGIN AT THE BOTTOM OF SUBBASE.

| | |
|---|---|
| PROJECT NAME: BARTON | |
| PROJECT NUMBER: BRO 1449(31) | |
| FILE NAME: 11j068/cos/z11j068sub.dgn | PLOT DATE: 12/17/2014 |
| PROJECT LEADER: J. BYATT | DRAWN BY: M. SMITH |
| DESIGNED BY: S. BEAUMONT | CHECKED BY: J. BYATT |
| TYPICAL EARTHWORK SECTIONS | SHEET 6 OF 52 |

CLD 12-0174 MODEL: SUB01

## GENERAL

1. ALL MATERIALS AND CONSTRUCTION SHALL CONFORM TO THE STATE OF VERMONT AGENCY OF TRANSPORTATION STANDARD SPECIFICATIONS FOR CONSTRUCTION DATED 2011, AND ITS LATEST REVISIONS, AND THE AASHTO LRFD BRIDGE DESIGN SPECIFICATIONS, DATED 2012, AND ITS LATEST REVISIONS.

2. ALL PRECAST CONCRETE ELEMENTS TO BE FABRICATED TO THE SPECIFIED DIMENSIONS WITHIN THE TOLERANCES DICTATED IN THE PRECAST/PRESTRESSED CONCRETE INSTITUTE TOLERANCE MANUAL FOR PRECAST AND PRESTRESSED CONCRETE CONSTRUCTION, MNL 135-00, AND ITS LATEST REVISIONS.

3. DUE TO STABILITY CONCERNS AT THE ABUTMENTS DURING THE ERECTION OF THE SUPERSTRUCTURE, THE CONTRACTOR SHALL SUBMIT THE ERECTION PLAN A MINIMUM OF 30 WORKING DAYS PRIOR TO THE BRIDGE CLOSURE PERIOD. UNDER NO CIRCUMSTANCES SHALL A BRIDGE CLOSURE PERIOD BEGIN PRIOR TO HAVING AN ACCEPTED ERECTION PLAN.

4. THE METHOD OF FORMING FOR SUBSEQUENT POURS AFTER PLACING PRECAST/PRESTRESSED SUPERSTRUCTURE UNITS SHALL BE DETERMINED BY THE CONTRACTOR. THE CONTRACTOR IS ENCOURAGED TO WORK WITH THE FABRICATOR IF ADDITIONAL SUPPORTS ARE REQUIRED. IN NO CASE SHALL THE CONTRACTOR ATTACH ADDITIONAL FORM OR SCREED SUPPORTS BY DRILLING OR SIMILAR MEANS INTO ANY PRECAST/PRESTRESSED SUPERSTRUCTURE UNIT.

5. ALL DIMENSIONS SHOWN IN THE PLANS ARE HORIZONTAL AND VERTICAL AND ARE GIVEN AT 68 DEGREES FAHRENHEIT, UNLESS NOTED OTHERWISE.

6. THE CONTRACTOR IS MADE AWARE THAT EXISTING UTILITIES ARE WITHIN THE CONSTRUCTION LIMITS OF BRIDGE 8. THE UTILITIES WILL BE RELOCATED BY OTHERS PRIOR TO THE START OF CONSTRUCTION. THE LOCATION OF ANY UTILITY INFORMATION SHOWN ON THE PLANS IS APPROXIMATE. NO CLAIMS ARE MADE AS TO THE ACCURACY OR COMPLETENESS OF THE UTILITIES SHOWN. THE CONTRACTOR IS SOLELY RESPONSIBLE FOR LOCATING AND PROTECTING FROM DAMAGE ALL UTILITIES ON SITE DURING ALL STAGES OF CONSTRUCTION. SEE SPECIAL PROVISIONS FOR ADDITIONAL INFORMATION AND REQUIREMENTS.

7. NO SUBSTITUTION FOR PRECAST CONCRETE WILL BE PERMITTED.

8. ALL PG BINDER USED IN BITUMINOUS CONCRETE PAVEMENT SHALL BE IN ACCORDANCE WITH SUBSECTION 490.03b.

9. EMULSIFIED ASPHALT SHALL BE APPLIED ON ALL COLD PLANED SURFACES AT THE RATE OF 0.080 GAL/SY AND BETWEEN ALL COURSES OF PAVEMENT AT THE RATE OF 0.040 GAL/SY OR AS DIRECTED BY THE ENGINEER.

## GENERAL (CONTINUED)

10. ANY REQUIRED SAWCUT OF EXISTING PAVEMENT SHALL BE INCIDENTAL TO THE WEARING COURSE PAY ITEM.

11. THE CONTRACTOR SHALL REVIEW AND UNDERSTAND ALL APPLICABLE ENVIRONMENTAL PERMITS AND ENSURE THAT ALL CONSTRUCTION CONDITIONS ARE MET.

12. THE CONTRACTOR SHALL BE RESPONSIBLE FOR REPAIRING ANY DAMAGE TO PRIVATE OR PUBLIC PROPERTY CAUSED BY THE CONTRACTOR AT THE CONTRACTOR'S EXPENSE AND TO THE SATISFACTION OF THE ENGINEER.

13. SLOPE ROUNDING: ALL CUT SLOPES TO BE ROUNDED IN ACCORDANCE WITH STANDARD DRAWING B-5.

14. ROARING BROOK ROAD (TH2) WILL BE CLOSED AND TRAFFIC DETOURED DURING CONSTRUCTION OF NEW BRIDGE 8. SEE THE SPECIAL PROVISIONS FOR ADDITIONAL INFORMATION AND REQUIREMENTS REGARDING THE CLOSURE PERIOD. DETOUR ROUTES WILL BE DETERMINED BY THE TOWN. THE CONTRACTOR SHALL COORDINATE WITH THE TOWN AND THE ENGINEER. THE CONTRACTOR SHALL BE RESPONSIBLE FOR PROVIDING SIGNAGE IN ACCORDANCE WITH THE LATEST EDITION OF THE MUTCD AND VTRANS STANDARDS. PAYMENT FOR DETOUR SIGNAGE WILL BE MADE UNDER ITEM 641.10, "TRAFFIC CONTROL".

## RIGHT-OF-WAY REFERENCES

15. "STATE OF VERMONT DEPARTMENT OF HIGHWAYS - PROPOSED IMPROVEMENT - SECONDARY PROJECT - TOWN OF BARTON, COUNTY OF ORLEANS, STATE AID ROUTE 4, WEST GLOVER-BARTON ROAD - PROJECT S NO. 94(1)", DATED 1954, ON FILE AT THE STATE OF VERMONT AGENCY OF TRANSPORTATION.

16. "STATE OF VERMONT AGENCY OF TRANSPORTATION - PROPOSED IMPROVEMENT - TOWN OF BARTON, COUNTY OF ORLEANS, TOWN HIGHWAY 2 (WEST GLOVER ROAD) - PROJECT SOS NO. 2199(4)", DATED 1976, ON FILE AT THE STATE OF VERMONT AGENCY OF TRANSPORTATION.

## EARTHWORK

17. REMOVAL OF THE EXISTING STRUCTURE SHALL BE UNDER ITEM 529.15, "REMOVAL OF STRUCTURE". THIS WORK SHALL INCLUDE REMOVAL OF ANY PORTIONS OF THE EXISTING STRUCTURE, INCLUDING THE SUPERSTRUCTURE, ABUTMENTS, RETAINING WALLS, WINGWALLS, AND BRIDGE RAIL THAT FALL OUTSIDE THE LIMITS OF STRUCTURE EXCAVATION OR UNCLASSIFIED CHANNEL EXCAVATION.

18. THE "STONE FILL, TYPE IV" UNDER THE BRIDGE AS SHOWN IN THE PLANS SHALL BE PLACED BEFORE THE NEW BEAMS ARE SET.

## CONCRETE AND REINFORCING STEEL

19. AS DETAILED ON THE QUANTITY SUMMARY SHEETS ON SHEETS 9-12, THE PRECAST CONCRETE SUBSTRUCTURES AND APPROACH SLABS ARE OPTION ITEMS. THE CONTRACTOR SHALL BID EITHER CONTRACT ITEM 540.10 FOR ALL OPTIONS OR CONTRACT ITEM 900.645 FOR ALL OPTIONS. MIXING OPTION ITEMS IN THE SUBMITTED BID IS NOT ALLOWED.

20. "WATER REPELLENT, SILANE", SHALL BE APPLIED IN ACCORDANCE WITH SECTION 514 TO ALL EXPOSED CONCRETE ON THE BRIDGE SUPERSTRUCTURE AND SUBSTRUCTURE WITH THE EXCEPTION OF THE BOTTOM OF THE PRECAST NEXT BEAMS BETWEEN DRIP NOTCHES.

21. ALL REINFORCING STEEL SHALL BE DETAILED AND FABRICATED USING PROCEDURES AND TOLERANCES IN ACCORDANCE WITH APPLICABLE PUBLICATIONS OF THE "CONCRETE REINFORCING STEEL INSTITUTE".

22. MINIMUM CLEAR COVER FOR REINFORCING STEEL SHALL BE AS FOLLOWS:

| | |
|---|---|
| ALONG BACK FACES OF WALLS AGAINST EARTH: | 2.00 INCHES |
| ALONG TOP SURFACE OF DECK SLAB: | 2.50 INCHES |
| ALONG BOTTOM SURFACE OF DECK SLAB: | 1.75 INCHES |
| BEAM-END CLOSURE POUR: | 2.00 INCHES |
| ELSEWHERE UNLESS OTHERWISE INDICATED: | 3.00 INCHES |

23. TEST BARS SHALL BE PROVIDED IN ACCORDANCE WITH THE "VERMONT AGENCY OF TRANSPORTATION MATERIALS SAMPLING MANUAL".

| CONCRETE | | REINFORCING STEEL | |
|---|---|---|---|
| STRUCTURAL ELEMENT: | CONTRACT ITEM: | TO MEET THE REQUIREMENTS FOR: | PAYMENT TO BE INCLUDED IN: |
| NEXT BEAMS | ITEM 900.640, "SPECIAL PROVISION (PRESTRESSED CONCRETE NEXT D BEAMS) (NEXT 32D)" | REINFORCING STEEL, LEVEL II | ITEM 900.640, "SPECIAL PROVISION (PRESTRESSED CONCRETE NEXT D BEAMS) (NEXT 32D)" |
| CAST-IN-PLACE CONCRETE* | ITEM 900.608, "SPECIAL PROVISION (HIGH PERFORMANCE CONCRETE, RAPID SET) (FPQ)" | REINFORCING STEEL, LEVEL II | ITEM 900.608, "SPECIAL PROVISION (HIGH PERFORMANCE CONCRETE, RAPID SET) (FPQ)" |
| SUBSTRUCTURE | ITEM 540.10, "PRECAST CONCRETE STRUCTURE" OR ITEM 900.645, "SPECIAL PROVISION (CONTRACTOR-FABRICATED PRECAST CONCRETE STRUCTURE), AS APPROPRIATE. | REINFORCING STEEL, LEVEL I | ITEM 540.10, "PRECAST CONCRETE STRUCTURE" OR ITEM 900.645, "SPECIAL PROVISION (CONTRACTOR-FABRICATED PRECAST CONCRETE STRUCTURE), AS APPROPRIATE. |
| BRIDGE CURBS | ITEM 501.33, "CONCRETE, HIGH PERFORMANCE CLASS A" | REINFORCING STEEL, LEVEL II | ITEM 507.12, "REINFORCING STEEL, LEVEL II" |
| APPROACH SLABS | ITEM 540.10, "PRECAST CONCRETE STRUCTURE" OR ITEM 900.645, "SPECIAL PROVISION (CONTRACTOR-FABRICATED PRECAST CONCRETE STRUCTURE), AS APPROPRIATE. | REINFORCING STEEL, LEVEL I | ITEM 540.10, "PRECAST CONCRETE STRUCTURE" OR ITEM 900.645, "SPECIAL PROVISION (CONTRACTOR-FABRICATED PRECAST CONCRETE STRUCTURE), AS APPROPRIATE. |

* CAST-IN-PLACE CONCRETE SHALL INCLUDE ALL CONCRETE PLACED INTEGRALLY WITH THE SUPERSTRUCTURE AND APPROACH SLABS INCLUDING BEAM-END CLOSURE POURS, DECK CLOSURE POURS, AND APPROACH SLAB CLOSURE POURS, AND SUBSTRUCTURE CONCRETE FOR PILE CAVITIES AS DETAILED IN THE PLANS.

## PRECAST ABUTMENTS AND POST-TENSIONING

24. WATERSTOPS SHALL BE PLACED AT THE JOINT BETWEEN THE PRECAST ABUTMENTS AND THE CAST-IN-PLACE CONCRETE BEAM-END CLOSURE POURS. THIS WORK SHALL BE PAID FOR UNDER THE APPROPRIATE PRECAST CONCRETE ABUTMENT PAY ITEM.

25. IF VERTICAL CONSTRUCTION JOINTS ARE REQUIRED BY THE CONTRACTOR FOR SHIPPING OF THE ABUTMENTS THEN THE SECTIONS SHALL BE KEYED AND MATCH CAST. A JOINT DETAIL SHALL BE SHOWN ON THE FABRICATION DRAWINGS.

26. POST-TENSIONING AND ASSOCIATED ITEMS ARE ONLY REQUIRED IF THE PRECAST ABUTMENT IS CONSTRUCTED OF MORE THAN ONE UNIT. ANY POST-TENSIONING STRANDS AND CONDUIT SHALL ADHERE TO THE REQUIREMENTS OF SECTION 510 - PRESTRESSED CONCRETE. GALVANIZED ANCHOR ASSEMBLIES, CONDUIT, AND POST-TENSIONING STRANDS SHALL BE INCLUDED UNDER THE APPROPRIATE PRECAST CONCRETE ABUTMENT PAY ITEM. POST-TENSIONING STRANDS SHALL BE COVERED WITH SEAMLESS POLYPROPYLENE SHEATH (WITH CORROSION INHIBITOR GREASE BETWEEN SHEATH AND STRAND) FOR THE LENGTH OF THE STRAND, EXCEPT AT ANCHORAGE LOCATIONS.

27. GALVANIZE ANCHOR ASSEMBLIES AFTER FABRICATION ACCORDING TO AASHTO M232M/M232.

28. DESIGN VALUES:
    A. CONCRETE COMPRESSIVE STRENGTH: f`c= 5,000 PSI.
    B. POST-TENSIONING STRANDS: 0.5 INCH DIAMETER, 270 KSI, LOW RELAXATION 7-WIRE STRANDS.
    C. ASSUMED MODULUS OF ELASTICITY IS 28,500 KSI.
    D. THERE SHALL BE TWO STRANDS PER CONDUIT.
    E. JACKING FORCE PER STRAND: 32 KIPS

29. THE CORRUGATED STEEL PIPE SHALL BE TYPE I AND SHALL MEET THE REQUIREMENTS OF SUBSECTION 711.01 AND AASHTO M218. ALL COSTS ASSOCIATED WITH PLACING THE CORRUGATED STEEL PIPE SHALL BE INCLUDED UNDER THE APPROPRIATE PRECAST CONCRETE ABUTMENT PAY ITEM.

30. PROPOSED SEQUENCE OF CONSTRUCTION:
    A. PREPARE AND GRADE FOUNDATION TO REQUIRED ELEVATION.
    B. DRIVE PILES.
    C. PLACE PRECAST ABUTMENTS AND INSTALL TRANSVERSE STRANDS (IF MORE THAN ONE UNIT IS USED).
    D. APPLY EPOXY BONDING COMPOUND TO MATCH CAST FACES OF VERTICAL CONSTRUCTION JOINT.
    E. USE A CALIBRATED JACK TO TENSION TO 3 KIPS TO REMOVE SAG IN STRANDS.
    F. CHECK ALIGNMENT OF PRECAST ABUTMENT ELEMENTS.
    G. STRESS POST-TENSIONING STRANDS USING A CALIBRATED JACK.
    H. FILL PILE CAVITIES.
    I. BACKFILL MAY BE COMPLETED AFTER SPLICE CONNECTOR GROUT HAS REACHED 85% OF 5,000 PSI.

31. ALTERNATE SEQUENCE OF CONSTRUCTION MAY BE SUBMITTED TO THE VTRANS PROJECT MANAGER FOR APPROVAL.

## NEXT D BEAMS

32. NEXT D BEAMS ARE A NON-PROPRIETARY SHAPE DEVELOPED BY PCI NORTHEAST (PCINE). STANDARDIZED SECTION PROPERTIES AND DETAILS MAY BE FOUND AT http://www.pcine.org.

33. DESIGN VALUES:
    A. CONCRETE DESIGN COMPRESSIVE STRENGTH: f`c = 6,000 PSI.
    B. CONCRETE COMPRESSIVE STRENGTH AT RELEASE: f`ci = 4,000 PSI.
    C. PRESTRESSING STRANDS: 0.6 INCH DIAMETER, 270 KSI, LOW-RELAXATION 7-WIRE STRANDS.
    D. ASSUMED MODULUS OF ELASTICITY: 28,500 KSI.
    E. JACKING FORCE PER STRAND: 44 KIPS.
    F. SERVICE LOADS:

| | |
|---|---|
| MEMBER MOMENT | 619.1 K-FT |
| SUPERIMPOSED DEAD LOAD MOMENT | 124.4 K-FT |
| LIVE LOAD AND IMPACT MOMENT | 802.8 K-FT |
| DEAD LOAD REACTION | 64.5 KIPS |
| LIVE LOAD AND IMPACT REACTION | 63.4 KIPS |
| TOTAL REACTION | 127.9 KIPS |
| CAMBER AT RELEASE | 11/16 INCHES |
| ERECTION CAMBER | 1 1/8 INCHES |
| RESIDUAL CAMBER | 1 5/16 INCHES |
| FINAL CAMBER | 15/16 INCHES |

DIMENSION TOLERANCES SHALL BE INCLUDED IN FABRICATION DRAWINGS.

34. ENDS OF FLANGES IN CONTACT WITH GROUT SHALL BE SANDBLASTED PRIOR TO DELIVERY AND POWER WASHED WITH WATER PRIOR TO ERECTION OF THE BEAMS.

35. METHOD OF FORMING FLANGE CONNECTION SHALL BE DETERMINED BY THE CONTRACTOR. THE FORMS SHALL BE REMOVABLE AND ABLE TO ACCOMMODATE DIFFERENTIAL CAMBER. FORM SUPPORTS SHALL NOT PENETRATE THROUGH THE TOP OF POUR UNLESS APPROVED BY THE ENGINEER. THE CONTRACTOR SHALL NOT DRILL INTO NEXT BEAMS.

36. THE FABRICATOR MAY ALTER THE DESIGN AS DETAILED IN THESE PLANS TO ACCOMMODATE THE FABRICATOR'S SPECIFIC OPERATION. THIS ALTERATION MUST BE DESIGNED BY A PROFESSIONAL ENGINEER LICENSED IN THE STATE OF VERMONT, MEET THE ABOVE CRITERIA, AND SHALL BE APPROVED BY THE PROJECT MANAGER.

37. PROPOSED SEQUENCE OF CONSTRUCTION:
    A. LAY OUT WORKING LINES THE ENTIRE WIDTH OF THE BRIDGE ALONG CENTERLINE OF BEARING, MEASURED FROM A SINGLE WORKING POINT. THE WORKING LINES SHALL BE BASED ON THE NOMINAL BEAM WIDTHS.
    B. VERIFY THE BEAM SEAT ELEVATIONS AND TAKE CORRECTIVE ACTION IF NECESSARY.
    C. INSTALL BEARINGS.
    D. ERECT THE BEAMS TO FIT WITHIN THE WORKING LINES.
    E. ADJUST BEAMS TO FIT SNUG AGAINST ½" CORK ON INTERIOR OF CHEEK WALLS.
    F. CONSTRUCT FORMS FOR THE FLANGE CONNECTION POUR AND BEAM-END CLOSURE POUR.
    G. GROUT CONNECTIONS BETWEEN BEAM FLANGES, APPLY LONGITUDINAL GROOVES IN ACCORDANCE WITH SECTION 509, AND CURE. THIS WORK WILL BE PAID FOR UNDER ITEM 900.608, "SPECIAL PROVISION (HIGH PERFORMANCE CONCRETE, RAPID SET) (FPQ)"
    H. COMPLETE BEAM-END CLOSURE POUR TO TOP OF DECK, APPLY LONGITUDINAL GROOVES IN ACCORDANCE WITH SECTION 509, AND CURE. THIS WORK WILL BE PAID FOR UNDER ITEM 900.608, "SPECIAL PROVISION (HIGH PERFORMANCE CONCRETE, RAPID SET) (FPQ)"

38. ALTERNATE SEQUENCE OF CONSTRUCTION MAY BE SUBMITTED TO THE VTRANS PROJECT MANAGER FOR APPROVAL.

## H-PILES

39. TO PREVENT DAMAGE TO THE PILES, PILE SHOES ARE REQUIRED AND SHALL CONFORM TO SUBSECTION 505.04(f).

40. THE TOPS OF THE PILES AFTER DRIVING SHALL NOT VARY FROM THE POSITION SHOWN ON THE PLANS BY MORE THAN THREE INCHES. THE PILE ORIENTATION SHALL NOT VARY BY MORE THAN FIVE DEGREES. THE CONTRACTOR SHALL DEMONSTRATE TO THE SATISFACTION OF THE ENGINEER HOW THE TOLERANCES WILL BE MET. THESE MEASURES SHALL BE DEMONSTRATED IN A SUBMITTAL TO BE ACCEPTED BEFORE PILE DRIVING COMMENCES.

41. THE PILES SHALL BE DRIVEN TO A NOMINAL PILE DRIVING RESISTANCE (RNDR) OF 218 KIPS, AS DETERMINED BY THE RESULTS OF DYNAMIC TESTING, AND AS INTERPRETED BY THE ENGINEER, AND TO A MINIMUM DEPTH OF 19 FEET BELOW THE BOTTOM OF THE PRECAST ABUTMENT. NO PILE SPLICES SHALL BE ALLOWED ABOVE THIS DEPTH.

42. TO ENSURE THAT THE NOMINAL CAPACITY HAS BEEN ATTAINED AND TO PREVENT THE OVERSTRESSING OF THE PILES DURING DRIVING OPERATIONS, DYNAMIC TESTING SHALL BE PERFORMED IN ACCORDANCE WITH SUBSECTION 505.04. A MINIMUM OF ONE DYNAMIC PILE TEST SHALL BE CONDUCTED ON THE FIRST PILE DRIVEN FOR EACH SUBSTRUCTURE UNIT, FOR A TOTAL OF TWO TESTS. MORE TESTS MAY BE ORDERED BY THE ENGINEER. ADDITIONAL TEST(S) ORDERED BY THE ENGINEER WILL BE PAID FOR AT THE UNIT PRICE BID FOR CONTRACT ITEM 505.45.

43. STRESSES IN THE PILE DURING DRIVING SHALL NOT EXCEED THE MAXIMUM DRIVING STRESS. THE MAXIMUM DRIVING STRESS SHALL BE DETERMINED AS 90 PERCENT OF THE PILE STEEL STRENGTH MULTIPLIED BY A RESISTANCE FACTOR OF 1.00.

44. FOR ESTIMATING PURPOSES, THE PILE TIP ELEVATIONS WERE ASSUMED TO BE AS SHOWN ON THE BORING LOGS. THE ACTUAL IN PLACE LENGTHS MAY VARY.

STATE OF VERMONT
AGENCY OF TRANSPORTATION

# QUANTITY SHEET 1

| SUMMARY OF ESTIMATED QUANTITIES | | | | TOTALS | | DESCRIPTIONS | | | |
|---|---|---|---|---|---|---|---|---|---|
| ROADWAY | EROSION CONTROL | BRIDGE | FULL C.E. ITEMS | GRAND TOTAL | FINAL | UNIT | ITEMS | ITEM NUMBER | ROUND |
| 1 | | | | 1 | | LS | CLEARING AND GRUBBING, INCLUDING INDIVIDUAL TREES AND STUMPS | 201.10 | - |
| 1540 | | | | 1540 | | CY | COMMON EXCAVATION | 203.15 | 11.1 |
| | | 368 | | 368 | | CY | UNCLASSIFIED CHANNEL EXCAVATION | 203.27 | 0.4 |
| 425 | | | | 425 | | CY | SAND BORROW | 203.31 | 3.8 |
| 1 | | | | 1 | | CY | TRENCH EXCAVATION OF EARTH, EXPLORATORY (N.A.B.I.) | 204.22 | - |
| | | 313 | | 313 | | CY | STRUCTURE EXCAVATION | 204.25 | 1.9 |
| | | 99 | | 99 | | CY | GRANULAR BACKFILL FOR STRUCTURES | 204.30 | 1.2 |
| 400 | | | | 400 | | SY | COLD PLANING, BITUMINOUS PAVEMENT | 210.10 | 10.7 |
| 20 | | | | 20 | | CY | SUBBASE OF GRAVEL | 301.15 | 2.8 |
| | | | | | | | BEGIN OPTION AA | | |
| 950 | | | | 950 | | CY | SUBBASE OF CRUSHED GRAVEL, COARSE GRADED | 301.25 | 18 |
| 950 | | | | 950 | | CY | SUBBASE OF DENSE GRADED CRUSHED STONE | 301.35 | 18 |
| | | | | | | | END OPTION AA | | |
| 1 | | | | 1 | | CY | AGGREGATE SURFACE COURSE | 401.10 | 0.2 |
| 50 | | | | 50 | | TON | AGGREGATE SHOULDERS | 402.12 | 6.3 |
| 8 | | | | 8 | | CWT | EMULSIFIED ASPHALT | 404.65 | 0.2 |
| 1 | | | | 1 | | LU | PRICE ADJUSTMENT, ASPHALT CEMENT (N.A.B.I.) | 406.50 | - |
| | | 7 | | 7 | | CY | CONCRETE, HIGH PERFORMANCE CLASS A | 501.33 | 0.9 |
| | | 1 | | 1 | | LS | FURNISHING EQUIPMENT FOR DRIVING PILING | 504.10 | - |
| | | 858 | | 858 | | LF | STEEL PILING, HP 12 X 63 | 505.155 | - |
| | | 2 | | 2 | | EACH | DYNAMIC PILE LOADING TEST | 505.45 | - |
| | | 350 | | 350 | | LB | REINFORCING STEEL, LEVEL II | 507.12 | 0.9 |
| | | 8 | | 8 | | GAL | WATER REPELLENT, SILANE | 514.10 | 2.1 |
| | | 50 | | 50 | | LF | BRIDGE EXPANSION JOINT, ASPHALTIC PLUG | 516.10 | - |
| | | 133 | | 133 | | SY | SHEET MEMBRANE WATERPROOFING, TORCH APPLIED | 519.20 | 0.6 |
| | | 50 | | 50 | | LF | JOINT SEALER, HOT POURED | 524.11 | - |
| | | 100 | | 100 | | LF | BRIDGE RAILING, GALVANIZED 2 RAIL BOX BEAM | 525.33 | 0.7 |
| | | 1 | | 1 | | EACH | REMOVAL OF STRUCTURE (625 SF - EST.) | 529.15 | - |
| | | 12 | | 12 | | EACH | BEARING DEVICE ASSEMBLY, STEEL REINFORCED ELASTOMERIC PAD | 531.17 | - |
| | | | | | | | BEGIN OPTION BB | | |
| | | 1 | | 1 | | LS | PRECAST CONCRETE STRUCTURE (ABUTMENT #1) | 540.10 | - |
| | | 1 | | 1 | | LS | SPECIAL PROVISION (CONTRACTOR-FABRICATED PRECAST CONCRETE STRUCTURE) (ABUTMENT #1) | 900.645 | - |
| | | | | | | | END OPTION BB | | |
| | | | | | | | BEGIN OPTION CC | | |
| | | 1 | | 1 | | LS | PRECAST CONCRETE STRUCTURE (ABUTMENT #2) | 540.10 | - |
| | | 1 | | 1 | | LS | SPECIAL PROVISION (CONTRACTOR-FABRICATED PRECAST CONCRETE STRUCTURE) (ABUTMENT #2) | 900.645 | - |
| | | | | | | | END OPTION CC | | |

| DETAILED SUMMARY OF QUANTITIES | | |
|---|---|---|
| QUANTITIES | UNIT | ITEMS |
| | | **EARTHWORK SUMMARY** |
| 1540 | CY | COMMON EXCAVATION |
| 92 | CY | UNCLASSIFIED CHANNEL EXCAVATION (0.25 x 368 CY) |
| 313 | CY | STRUCTURE EXCAVATION (ASSUME 1.0 x 313 CY) |
| 1945 | CY | TOTAL FILL AVAILABLE |
| 23 | CY | TOTAL FILL REQUIRED (INCLUDING 1.15 FILL FACTOR) |
| 1922 | CY | TOTAL WASTE |

PROJECT NAME: BARTON
PROJECT NUMBER: BRO 1449(31)

FILE NAME: 11J068/cos/z11J068frm.dgn
PROJECT LEADER: J. BYATT
DESIGNED BY: M. HALEY
QUANTITY SHEET 1

PLOT DATE: 12/17/2014
DRAWN BY: S. GOODWIN
CHECKED BY: P. SHEDD
SHEET 9 OF 52

STATE OF VERMONT
AGENCY OF TRANSPORTATION

# QUANTITY SHEET 2

| SUMMARY OF ESTIMATED QUANTITIES | | | | TOTALS | | DESCRIPTIONS | | | |
|---|---|---|---|---|---|---|---|---|---|
| ROADWAY | EROSION CONTROL | BRIDGE | FULL C.E. ITEMS | GRAND TOTAL | FINAL | UNIT | ITEMS | ITEM NUMBER | ROUND |
| | | | | | | | BEGIN OPTION DD | | |
| | | 1 | | 1 | | LS | PRECAST CONCRETE STRUCTURE (APPROACH SLAB #1) | 540.10 | - |
| | | 1 | | 1 | | LS | SPECIAL PROVISION (CONTRACTOR-FABRICATED PRECAST CONCRETE STRUCTURE) (APPROACH SLAB #1) | 900.645 | - |
| | | | | | | | END OPTION DD | | |
| | | | | | | | BEGIN OPTION EE | | |
| | | 1 | | 1 | | LS | PRECAST CONCRETE STRUCTURE (APPROACH SLAB #2) | 540.10 | - |
| | | 1 | | 1 | | LS | SPECIAL PROVISION (CONTRACTOR-FABRICATED PRECAST CONCRETE STRUCTURE) (APPROACH SLAB #2) | 900.645 | - |
| | | | | | | | END OPTION EE | | |
| 250 | | | | 250 | | LF | 8 INCH UNDERDRAIN PIPE | 605.11 | 1 |
| 2 | | | | 2 | | EACH | UNDERDRAIN FLUSHING BASIN | 605.95 | - |
| 35 | | | | 35 | | HR | ALL PURPOSE EXCAVATOR RENTAL, TYPE I | 608.25 | EST. |
| 90 | | | | 90 | | CY | STONE FILL, TYPE II | 613.11 | 5 |
| | | 278 | | 278 | | CY | STONE FILL, TYPE IV | 613.13 | 1 |
| 130 | | | | 130 | | LF | CAST-IN-PLACE CONCRETE CURB, TYPE B | 616.28 | 0.3 |
| 1 | | | | 1 | | EACH | RELOCATE MAILBOX, SINGLE SUPPORT | 617.10 | - |
| 175 | | | | 175 | | LF | STEEL BEAM GUARDRAIL, GALVANIZED | 621.20 | 6.5 |
| 4 | | | | 4 | | EACH | ANCHOR FOR STEEL BEAM RAIL | 621.60 | - |
| | | 4 | | 4 | | EACH | GUARDRAIL APPROACH SECTION, GALVANIZED 2 RAIL BOX BEAM | 621.72 | - |
| 75 | | | | 75 | | LF | REMOVAL AND DISPOSAL OF GUARDRAIL | 621.80 | 2 |
| 80 | | | | 80 | | LF | TEMPORARY TRAFFIC BARRIER | 621.90 | - |
| | | | 1 | 1 | | LS | FIELD OFFICE, ENGINEERS | 631.10 | - |
| | | | 1 | 1 | | LS | TESTING EQUIPMENT, CONCRETE | 631.16 | - |
| | | | 1 | 1 | | LS | TESTING EQUIPMENT, BITUMINOUS | 631.17 | - |
| | | | 3000 | 3000 | | DL | FIELD OFFICE TELEPHONE (N.A.B.I.) | 631.26 | - |
| 1 | | | | 1 | | LS | MOBILIZATION/DEMOBILIZATION | 635.11 | - |
| 1 | | | | 1 | | LS | TRAFFIC CONTROL | 641.10 | - |
| 1400 | | | | 1400 | | LF | DURABLE 4 INCH WHITE LINE, POLYUREA | 646.404 | - |
| 1400 | | | | 1400 | | LF | DURABLE 4 INCH YELLOW LINE, POLYUREA | 646.414 | - |
| 1400 | | | | 1400 | | LF | TEMPORARY 4 INCH WHITE LINE, PAINT | 646.602 | - |
| 1400 | | | | 1400 | | LF | TEMPORARY 4 INCH YELLOW LINE, PAINT | 646.612 | - |
| 90 | | | | 90 | | EACH | LINE STRIPING TARGETS | 646.76 | - |
| 180 | | 312 | | 492 | | SY | GEOTEXTILE UNDER STONE FILL | 649.31 | 1.7 |
| | 300 | | | 300 | | SY | GEOTEXTILE FOR SILT FENCE | 649.51 | - |
| | 20 | | | 20 | | LB | SEED | 651.15 | 3.8 |
| | 50 | | | 50 | | LB | FERTILIZER | 651.18 | - |
| | 0.5 | | | 0.5 | | TON | AGRICULTURAL LIMESTONE | 651.20 | 0.3 |
| | 0.5 | | | 0.5 | | TON | HAY MULCH | 651.25 | 0.3 |
| 55 | | | | 55 | | CY | TOPSOIL | 651.35 | 0.5 |
| 30 | | 64 | | 94 | | SY | GRUBBING MATERIAL | 651.40 | 1.8 |

| DETAILED SUMMARY OF QUANTITIES | | |
|---|---|---|
| QUANTITIES | UNIT | ITEMS |

PROJECT NAME: BARTON
PROJECT NUMBER: BRO 1449(31)

FILE NAME: 11J068/cos/z11J068frm.dgn
PROJECT LEADER: J. BYATT
DESIGNED BY: M. HALEY
QUANTITY SHEET 2

PLOT DATE: 12/17/2014
DRAWN BY: S. GOODWIN
CHECKED BY: P. SHEDD
SHEET 10 OF 52

STATE OF VERMONT
AGENCY OF TRANSPORTATION

# QUANTITY SHEET 3

| SUMMARY OF ESTIMATED QUANTITIES | | | | TOTALS | | DESCRIPTIONS | | | |
|---|---|---|---|---|---|---|---|---|---|
| ROADWAY | EROSION CONTROL | BRIDGE | FULL C.E. ITEMS | GRAND TOTAL | FINAL | UNIT | ITEMS | ITEM NUMBER | ROUND |
| | 1 | | | 1 | | LS | EPSC PLAN | 652.10 | - |
| | 40 | | | 40 | | HR | MONITORING EPSC PLAN | 652.20 | - |
| | 1 | | | 1 | | LU | MAINTENANCE OF EPSC PLAN (N.A.B.I.) | 652.30 | - |
| | 175 | | | 175 | | SY | TEMPORARY EROSION MATTING | 653.20 | 5 |
| | 3 | | | 3 | | CY | TEMPORARY STONE CHECK DAM, TYPE I | 653.25 | EST. |
| | 1 | | | 1 | | EACH | FILTER BAG | 653.45 | - |
| 1320 | | | | 1320 | | LF | PROJECT DEMARCATION FENCE | 653.55 | 7 |
| 18 | | | | 18 | | SF | TRAFFIC SIGNS, TYPE A | 675.20 | 0.16 |
| 50 | | | | 50 | | LF | SQUARE TUBE SIGN POST AND ANCHOR | 675.341 | - |
| 7 | | | | 7 | | EACH | REMOVING SIGNS | 675.50 | - |
| 2 | | | | 2 | | EACH | ERECTING SALVAGED SIGNS | 675.60 | - |
| 1 | | | | 1 | | EACH | SETTING SALVAGED POSTS | 675.61 | - |
| 4 | | | | 4 | | EACH | DELINEATOR WITH STEEL POST | 676.10 | - |
| 1 | | | | 1 | | EACH | REMOVAL OF EXISTING DELINEATOR | 676.12 | - |
| 1 | | | | 1 | | LU | PRICE ADJUSTMENT, FUEL (N.A.B.I.) | 690.50 | - |
| | | 39 | | 39 | | CY | SPECIAL PROVISION (HIGH PERFORMANCE CONCRETE, RAPID SET) (FPQ) | 900.608 | 2.8 |
| | | 140 | | 140 | | LF | SPECIAL PROVISION (PRESTRESSED CONCRETE NEXT D BEAMS) (NEXT 32 D) | 900.640 | - |
| 1 | | | | 1 | | LS | SPECIAL PROVISION (CPM SCHEDULE) | 900.645 | - |
| 1 | | | | 1 | | LU | SPECIAL PROVISION (INCENTIVE/DISINCENTIVE) (N.A.B.I.) | 900.650 | - |
| 1 | | | | 1 | | LU | SPECIAL PROVISION (MAT DENSITY PAY ADJUSTMENT, SMALL QUANTITY) (N.A.B.I.) | 900.650 | - |
| 1 | | | | 1 | | LU | SPECIAL PROVISION (MIXTURE PAY ADJUSTMENT) (N.A.B.I.) | 900.650 | - |
| 65 | | | | 65 | | SY | SPECIAL PROVISION (HAND-PLACED BITUMINOUS CONCRETE MATERIAL, DRIVES) | 900.675 | 2 |
| 550 | | | | 550 | | TON | SPECIAL PROVISION (BITUMINOUS CONCRETE PAVEMENT, SMALL QUANTITY) | 900.680 | 5 |

| DETAILED SUMMARY OF QUANTITIES | | |
|---|---|---|
| QUANTITIES | UNIT | ITEMS |
| | | **SPECIAL PROVISION (BITUMINOUS CONCRETE PAVEMENT, SMALL QUANTITY)** |
| 200 | TON | TYPE IIIS |
| 345 | TON | TYPE IVS |
| 545 | TON | SUBTOTAL |
| 5 | TON | ROUNDING |
| 550 | TON | TOTAL |

CONSULTING ENGINEERS

PROJECT NAME: BARTON
PROJECT NUMBER: BRO 1449(31)

FILE NAME: 11j068/cos/z11j068frm.dgn
PROJECT LEADER: J. BYATT
DESIGNED BY: M. HALEY
QUANTITY SHEET 3

PLOT DATE: 1/5/2015
DRAWN BY: S. GOODWIN
CHECKED BY: P. SHEDD
SHEET 11 OF 52

STATE OF VERMONT
AGENCY OF TRANSPORTATION

# BRIDGE QUANTITY SHEET 1

| SUMMARY OF BRIDGE QUANTITIES | | | | | TOTALS | DESCRIPTIONS | | | DETAILED SUMMARY OF QUANTITIES | | |
|---|---|---|---|---|---|---|---|---|---|---|---|
| APPROACH SLAB #1 | APPROACH SLAB #2 | ABUTMENT #1 | ABUTMENT #2 | SUPER-STRUCTURE | BRIDGE TOTAL | UNIT | ITEMS | ITEM NUMBER | QUANTITIES | UNIT | ITEMS |
| | | 191 | 177 | | 368 | CY | UNCLASSIFIED CHANNEL EXCAVATION | 203.27 | | | |
| | | 161 | 152 | | 313 | CY | STRUCTURE EXCAVATION | 204.25 | | | |
| | | 47 | 52 | | 99 | CY | GRANULAR BACKFILL FOR STRUCTURES | 204.30 | | | |
| | | | | 7 | 7 | CY | CONCRETE, HIGH PERFORMANCE CLASS A | 501.33 | | | |
| | | 0.5 | 0.5 | | 1 | LS | FURNISHING EQUIPMENT FOR DRIVING PILING | 504.10 | | | |
| | | 432 | 426 | | 858 | LF | STEEL PILING, HP 12 X 63 | 505.155 | | | |
| | | 1 | 1 | | 2 | EACH | DYNAMIC PILE LOADING TEST | 505.45 | | | |
| | | | | 350 | 350 | LB | REINFORCING STEEL, LEVEL II | 507.12 | | | |
| | | 3 | 3 | 2 | 8 | GAL | WATER REPELLENT, SILANE | 514.10 | | | |
| 25 | 25 | | | | 50 | LF | BRIDGE EXPANSION JOINT, ASPHALTIC PLUG | 516.10 | | | |
| | | | | 133 | 133 | SY | SHEET MEMBRANE WATERPROOFING, TORCH APPLIED | 519.20 | | | |
| 25 | 25 | | | | 50 | LF | JOINT SEALER, HOT POURED | 524.11 | | | |
| | | | | 100 | 100 | LF | BRIDGE RAILING, GALVANIZED 2 RAIL BOX BEAM | 525.33 | | | |
| | | | | 1 | 1 | EACH | REMOVAL OF STRUCTURE (625 SF - EST.) | 529.15 | | | |
| | | | | 12 | 12 | EACH | BEARING DEVICE ASSEMBLY, STEEL REINFORCED ELASTOMERIC PAD | 531.17 | | | |
| | | | | | | | BEGIN OPTION BB | | | | |
| | | 1 | | | 1 | LS | PRECAST CONCRETE STRUCTURE (ABUTMENT #1) | 540.10 | | | |
| | | 1 | | | 1 | LS | SPECIAL PROVISION (CONTRACTOR-FABRICATED PRECAST CONCRETE STRUCTURE) (ABUTMENT #1) | 900.645 | | | |
| | | | | | | | END OPTION BB | | | | |
| | | | | | | | BEGIN OPTION CC | | | | |
| | | | 1 | | 1 | LS | PRECAST CONCRETE STRUCTURE (ABUTMENT #2) | 540.10 | | | |
| | | | 1 | | 1 | LS | SPECIAL PROVISION (CONTRACTOR-FABRICATED PRECAST CONCRETE STRUCTURE) (ABUTMENT #2) | 900.645 | | | |
| | | | | | | | END OPTION CC | | | | |
| | | | | | | | BEGIN OPTION DD | | | | |
| 1 | | | | | 1 | LS | PRECAST CONCRETE STRUCTURE (APPROACH SLAB #1) | 540.10 | | | |
| 1 | | | | | 1 | LS | SPECIAL PROVISION (CONTRACTOR-FABRICATED PRECAST CONCRETE STRUCTURE) (APPROACH SLAB #1) | 900.645 | | | |
| | | | | | | | END OPTION DD | | | | |
| | | | | | | | BEGIN OPTION EE | | | | |
| | 1 | | | | 1 | LS | PRECAST CONCRETE STRUCTURE (APPROACH SLAB #2) | 540.10 | | | |
| | 1 | | | | 1 | LS | SPECIAL PROVISION (CONTRACTOR-FABRICATED PRECAST CONCRETE STRUCTURE) (APPROACH SLAB #2) | 900.645 | | | |
| | | | | | | | END OPTION EE | | | | |
| | | 138 | 140 | | 278 | CY | STONE FILL, TYPE IV | 613.13 | | | |
| | | | | 4 | 4 | EACH | GUARDRAIL APPROACH SECTION, GALVANIZED 2 RAIL BOX BEAM | 621.72 | | | |
| | | 157 | 155 | | 312 | SY | GEOTEXTILE UNDER STONE FILL | 649.31 | | | |
| | | 32 | 32 | | 64 | SY | GRUBBING MATERIAL | 651.40 | | | |
| 2 | 2 | 16 | 15 | 4 | 39 | CY | SPECIAL PROVISION (HIGH PERFORMANCE CONCRETE, RAPID SET) (FPQ) | 900.608 | | | |
| | | | | 140 | 140 | LF | SPECIAL PROVISION (PRESTRESSED CONCRETE NEXT D BEAMS) (NEXT 32 D) | 900.640 | | | |

PROJECT NAME: BARTON
PROJECT NUMBER: BRO 1449(31)

FILE NAME: 11J068/cos/z11J068frm.dgn
PROJECT LEADER: J. BYATT
DESIGNED BY: M. HALEY
BRIDGE QUANTITY SHEET

PLOT DATE: 12/17/2014
DRAWN BY: S. GOODWIN
CHECKED BY: P. SHEDD
SHEET 12 OF 52

## GENERAL INFORMATION

### SYMBOLOGY LEGEND NOTE

THE SYMBOLOGY ON THIS SHEET IS INTENDED TO COVER STANDARD CONVENTIONAL SYMBOLOGY. THE SYMBOLOGY IS USED FOR EXISTING & PROPOSED FEATURES WITH HEAVIER LINEWEIGHT, IN COMBINATION WITH PROJECT ANNOTATION, AS NOTED ON PROJECT PLAN SHEETS. THIS LEGEND SHEET COVERS THE BASICS. SYMBOLOGY ON PLANS MAY VARY, PLAN ANNOTATIONS AND NOTES SHOULD BE USED TO CLARIFY AS NEEDED.

## R.O.W. ABBREVIATIONS (CODES) & SYMBOLS

| POINT | CODE | DESCRIPTION |
|---|---|---|
| | CH | CHANNEL EASEMENT |
| | CONST | CONSTRUCTION EASEMENT |
| | CUL | CULVERT EASEMENT |
| | D&C | DISCONNECT & CONNECT |
| | DIT | DITCH EASEMENT |
| | DR | DRAINAGE EASEMENT |
| | DRIVE | DRIVEWAY EASEMENT |
| | EC | EROSION CONTROL |
| | HWY | HIGHWAY EASEMENT |
| | I&M | INSTALL & MAINTAIN EASEMENT |
| | LAND | LANDSCAPE EASEMENT |
| | R&RES | REMOVE & RESET |
| | R&REP | REMOVE & REPLACE |
| | SR | SLOPE RIGHT |
| | UE | UTILITY EASEMENT |
| | (P) | PERMANENT EASEMENT |
| | (T) | TEMPORARY EASEMENT |
| ■ | BNDNS | BOUND SET |
| ⊡ | BNDNS | BOUND TO BE SET |
| ● | IPNS | IRON PIN SET |
| ◎ | IPNS | IRON PIN TO BE SET |
| ⊠ | CALC | EXISTING ROW POINT |
| ○ | PROW | PROPOSED ROW POINT |
| [LENGTH] | | LENGTH CARRIED ON NEXT SHEET |

## COMMON TOPOGRAPHIC POINT SYMBOLS

| POINT | CODE | DESCRIPTION |
|---|---|---|
| | APL | BOUND APPARENT LOCATION |
| | BM | BENCHMARK |
| | BND | BOUND |
| | CB | CATCH BASIN |
| | COMB | COMBINATION POLE |
| | DITHR | DROP INLET THROATED DNC |
| | EL | ELECTRIC POWER POLE |
| | FPOLE | FLAGPOLE |
| | GASFIL | GAS FILLER |
| | GP | GUIDE POST |
| | GSO | GAS SHUT OFF |
| | GUY | GUY POLE |
| | GUYW | GUY WIRE |
| | GV | GATE VALUE |
| | H | TREE HARDWOOD |
| | HCTRL | CONTROL HORIZONTAL |
| | HVCTRL | CONTROL HORIZ. & VERTICAL |
| | HYD | HYDRANT |
| | IP | IRON PIN |
| | IPIPE | IRON PIPE |
| | LI | LIGHT - STREET OR YARD |
| | MB | MAILBOX |
| | MH | MANHOLE (MH) |
| | MM | MILE MARKER |
| | PM | PARKING METER |
| | PMK | PROJECT MARKER |
| | POST | POST STONE/WOOD |
| | RRSIG | RAILROAD SIGNAL |
| | RRSL | RAILROAD SWITCH LEVER |
| | S | TREE SOFTWOOD |
| | SAT | SATELLITE DISH |
| | SHRUB | SHRUB |
| | SIGN | SIGN |
| | STUMP | STUMP |
| | TEL | TELEPHONE POLE |
| | TIE | TIE |
| | TSIGN | SIGN W/DOUBLE POST |
| | VCTRL | CONTROL VERTICAL |
| | WELL | WELL |
| | WSO | WATER SHUT OFF |

THESE ARE COMMON VAOT SURVEY POINT SYMBOLS FOR EXISTING FEATURES, ALSO USED FOR PROPOSED FEATURES WITH HEAVIER LINEWEIGHT, IN COMBINATION WITH PROPOSED ANNOTATION.

## PROPOSED GEOMETRY CODES

| CODE | DESCRIPTION |
|---|---|
| PC | POINT OF CURVATURE |
| PI | POINT OF INTERSECTION |
| CC | CENTER OF CURVE |
| PT | POINT OF TANGENCY |
| PCC | POINT OF COMPOUND CURVE |
| PRC | POINT OF REVERSE CURVE |
| POB | POINT OF BEGINNING |
| POE | POINT OF ENDING |
| STA | STATION PREFIX |
| AH | AHEAD STATION SUFFIX |
| BK | BACK STATION SUFFIX |
| D | CURVE DEGREE OF (100FT) |
| R | CURVE RADIUS OF |
| T | CURVE TANGENT LENGTH |
| L | CURVE LENGTH OF |
| E | CURVE EXTERNAL DISTANCE |

## UTILITY SYMBOLOGY

### UNDERGROUND UTILITIES

| | |
|---|---|
| | UTILITY (GENERIC-UNKNOWN) |
| UT | TELEPHONE |
| UE | ELECTRIC |
| UC | CABLE (TV) |
| UEC | ELECTRIC+CABLE |
| UET | ELECTRIC+TELEPHONE |
| UCT | CABLE+TELEPHONE |
| UECT | ELECTRIC+CABLE+TELEP. |
| G | GAS LINE |
| W | WATER LINE |
| S | SANITARY SEWER (SEPTIC) |

### ABOVE GROUND UTILITIES (AERIAL)

| | |
|---|---|
| | UTILITY (GENERIC-UNKNOWN) |
| T | TELEPHONE |
| E | ELECTRIC |
| C | CABLE (TV) |
| EC | ELECTRIC+CABLE |
| ET | ELECTRIC+TELEPHONE |
| AER E&T | ELECTRIC+TELEPHONE |
| CT | CABLE+TELEPHONE |
| ECT | ELECTRIC+CABLE+TELEP. |
| | UTILITY POLE GUY WIRE |

## PROJECT CONSTRUCTION SYMBOLOGY

### PROJECT DESIGN & LAYOUT SYMBOLOGY

| | |
|---|---|
| CZ | CLEAR ZONE |
| | PLAN LAYOUT MATCHLINE |

### PROJECT CONSTRUCTION FEATURES

| | |
|---|---|
| | TOP OF CUT SLOPE |
| | TOE OF FILL SLOPE |
| | STONE FILL |
| | BOTTOM OF DITCH ℄ |
| | CULVERT PROPOSED |
| | STRUCTURE SUBSURFACE |
| PDF | PROJECT DEMARCATION FENCE |
| BF | BARRIER FENCE |
| | TREE PROTECTION ZONE (TPZ) |
| | STRIPING LINE REMOVAL |
| | SHEET PILES |

## CONVENTIONAL BOUNDARY SYMBOLOGY

### BOUNDARY LINES

| | |
|---|---|
| TOWN LINE | TOWN BOUNDARY LINE |
| COUNTY LINE | COUNTY BOUNDARY LINE |
| STATE LINE | STATE BOUNDARY LINE |
| | PROPOSED STATE R.O.W. (LIMITED ACCESS) |
| | PROPOSED STATE R.O.W. |
| | STATE ROW (LIMITED ACCESS) |
| | STATE ROW |
| | TOWN ROW |
| | PERMANENT EASEMENT LINE (P) |
| | TEMPORARY EASEMENT LINE (T) |
| | SURVEY LINE |
| P/L | PROPERTY LINE (P/L) |
| SR | SLOPE RIGHTS |
| 6f | 6F PROPERTY BOUNDARY |
| 4f | 4F PROPERTY BOUNDARY |
| HAZ | HAZARDOUS WASTE |

## EPSC LAYOUT PLAN SYMBOLOGY

### EPSC MEASURES

| | |
|---|---|
| | FILTER CURTAIN |
| | SILT FENCE |
| | SILT FENCE WOVEN WIRE |
| | CHECK DAM |
| | DISTURBED AREAS REQUIRING RE-VEGETATION |
| | EROSION MATTING |

### ENVIRONMENTAL RESOURCES

| | |
|---|---|
| | WETLAND BOUNDARY |
| | RIPARIAN BUFFER ZONE |
| | WETLAND BUFFER ZONE |
| | SOIL TYPE BOUNDARY |
| T&E | THREATENED & ENDANGERED SPECIES |
| HAZ | HAZARDOUS WASTE AREA |
| AG | AGRICULTURAL LAND |
| HABITAT | FISH & WILDLIFE HABITAT |
| FLOOD PLAIN | FLOOD PLAIN |
| OHW | ORDINARY HIGH WATER (OHW) |
| | STORM WATER |
| | USDA FOREST SERVICE LANDS |
| | WILDLIFE HABITAT SUIT/CONN |

### ARCHEOLOGICAL & HISTORIC

| | |
|---|---|
| ARCH | ARCHEOLOGICAL BOUNDARY |
| HISTORIC DIST | HISTORIC DISTRICT BOUNDARY |
| HISTORIC | HISTORIC AREA |
| H | HISTORIC STRUCTURE |

## CONVENTIONAL TOPOGRAPHIC SYMBOLOGY

### EXISTING FEATURES

| | |
|---|---|
| | ROAD EDGE PAVEMENT |
| | ROAD EDGE GRAVEL |
| | DRIVEWAY EDGE |
| | DITCH |
| | FOUNDATION |
| | FENCE (EXISTING) |
| | FENCE WOOD POST |
| | FENCE STEEL POST |
| | GARDEN |
| | ROAD GUARDRAIL |
| | RAILROAD TRACKS |
| | CULVERT (EXISTING) |
| | STONE WALL |
| | WALL |
| | WOOD LINE |
| | BRUSH LINE |
| | HEDGE |
| | BODY OF WATER EDGE |
| | LEDGE EXPOSED |

| | |
|---|---|
| PROJECT NAME: | BARTON |
| PROJECT NUMBER: | BRO 1449(31) |

| | |
|---|---|
| FILE NAME: 11j068/cos/z11j068frm.dgn | PLOT DATE: 12/17/2014 |
| PROJECT LEADER: J. BYATT | DRAWN BY: M. HALEY |
| DESIGNED BY: M. HALEY | CHECKED BY: P. SHEDD |
| CONVENTIONAL SYMBOLOGY LEGEND SHEET | SHEET 13 OF 52 |

CONSULTING ENGINEERS

CLD 12-0174 MODEL: Legend

## GPS CONTROL POINTS

### HVCTRL #1
REBAR

NORTH = 818474.143
EAST = 1712118.108
ELEV. = 1260.608

### HVCTRL #2
REBAR

NORTH = 816981.669
EAST = 1713275.201
ELEV. = 1214.944

## TRAVERSE TIES

### HVCTRL #4
NORTH = 816068.406
EAST = 1714460.305
ELEV. = 1144.447

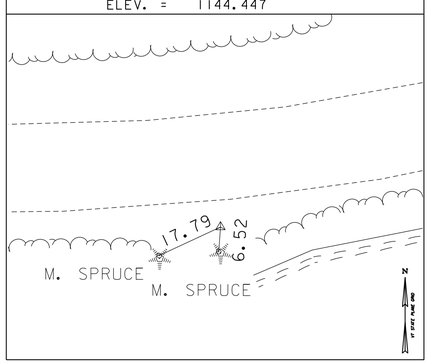


### HVCTRL #5
NORTH = 816632.784
EAST = 1715407.711
ELEV. = 1125.843

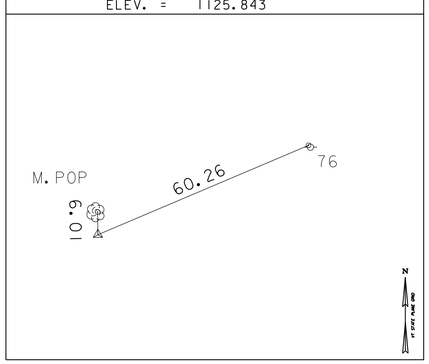


NORTH =
EAST =
ELEV. =

NORTH =
EAST =
ELEV. =

NORTH =
EAST =
ELEV. =

## ALIGNMENT TIES

NORTH =
EAST =
ELEV. =

NORTH =
EAST =
ELEV. =

NORTH =
EAST =
ELEV. =

NORTH =
EAST =
ELEV. =

NORTH =
EAST =
ELEV. =

DATUM

VERTICAL NAVD 88

HORIZONTAL NAD 83(96)

ADJUSTMENT COMPASS

PROJECT NAME: BARTON

PROJECT NUMBER: BRO 1449(31)

FILE NAME: survey\xlij068ti.dgn
PROJECT LEADER: C. WILLIAMS
DESIGNED BY:
TIE SHEET 1

PLOT DATE: 12/17/2014
DRAWN BY: R. BULLOCK
CHECKED BY:
SHEET 14 OF 52

## ALIGNMENT TIES

### POT 38+08.83
NORTH = 816083.335
EAST = 1714260.167

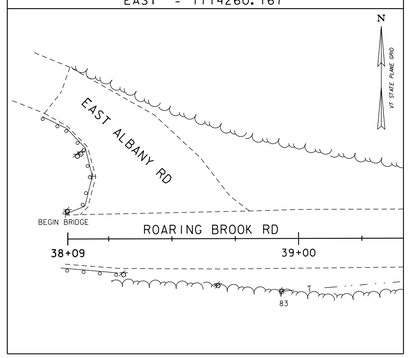


### PC 39+66.76
NORTH = 816083.700
EAST = 1714418.093

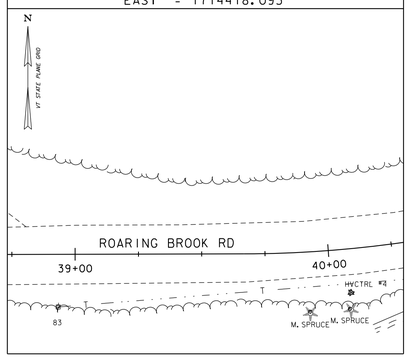


### PT 42+87.76
NORTH = 816193.433
EAST = 1714712.642

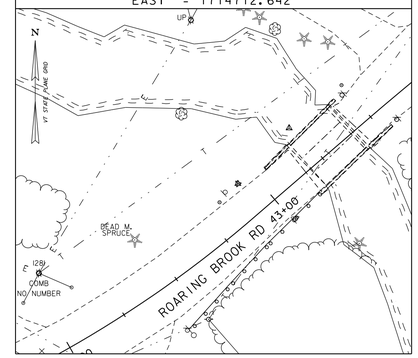


### PC 43+51.30
NORTH = 816234.900
EAST = 1714760.796

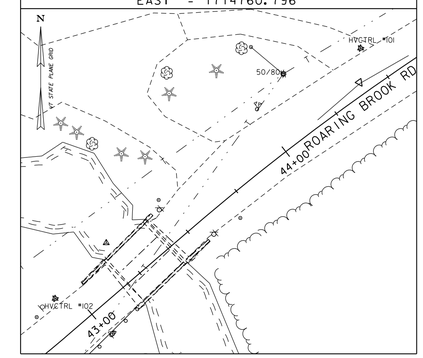


### PT 45+27.78
NORTH = 816336.744
EAST = 1714904.593

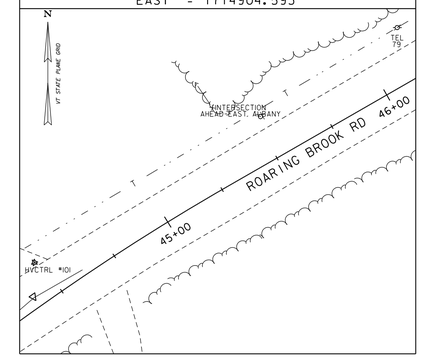


## ALIGNMENT TIES

### POT 48+28.03
NORTH = 816486.341
EAST = 1715164.920

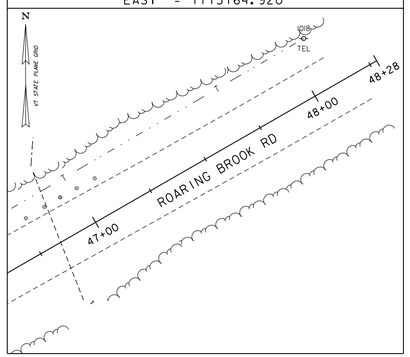


| | |
|---|---|
| PROJECT NAME: BARTON | |
| PROJECT NUMBER: BRO 1449(31) | |
| FILE NAME: z11j068/cos/z11j068ti.dgn | PLOT DATE: 12/17/2014 |
| PROJECT LEADER: J. BYATT | DRAWN BY: W. GORDON |
| DESIGNED BY: M. HALEY | CHECKED BY: P. SHEDD |
| TIE SHEET 2 | SHEET 15 OF 52 |

CLD CONSULTING ENGINEERS

CLD 12-0174 MODEL: TIE SHEET 02

TEMPORARY 4 INCH WHITE LINE, PAINT
DURABLE 4 INCH WHITE LINE, POLYUREA
39+50 TO 46+50 SOLID LT & RT

TEMPORARY 4 INCH YELLOW LINE, PAINT
DURABLE 4 INCH YELLOW LINE, POLYUREA
39+50 TO 46+50 SOLID LT & RT

REMOVING SIGNS
AS SHOWN - 7

ERECTING SALVAGED SIGNS
AS SHOWN - 2

REMOVAL OF EXISTING DELINEATOR
42+43 RT

GUARDRAIL APPROACH SECTION,
GALVANIZED 2 RAIL BOX BEAM
42+74.3 TO 43+04.7 LT
42+75.0 TO 43+04.7 RT
43+52.3 TO 43+64.2 LT (R=10')
43+53.4 TO 43+82.8 RT

BRIDGE RAILING,
GALVANIZED 2 RAIL BOX BEAM
43+04.7 TO 43+52.3 LT
43+04.7 TO 43+53.4 RT

STEEL BEAM
GUARDRAIL, GALVANIZED
42+24.3 TO 42+74.3 LT
42+25.0 TO 42+75.0 RT
43+82.8 TO 44+45.3 RT

ANCHOR FOR STEEL BEAM RAIL
42+24.3 LT
42+25.0 RT
43+64.2 LT
44+45.3 RT

REMOVAL AND DISPOSAL OF GUARDRAIL
42+43 TO 43+16 RT

CAST-IN-PLACE
CONCRETE CURB, TYPE B
42+64 TO 43+04 RT
42+73 TO 43+04 LT
43+52 TO 43+65 LT
43+52 TO 43+94 RT

CONSTRUCT DRIVES
41+75 LT (24.0 FT WIDE, GRAVEL,
W/ 4' PAVED APRON, RES.)
43+72 LT (13.0 FT WIDE, PAVED, RES.)

DELINEATOR WITH STEEL POST
42+24.3 LT
42+25.0 RT
43+55 LT
44+45.3 RT

RELOCATE MAILBOX, SINGLE SUPPORT
44+01 LT

STONE FILL, TYPE II
GEOTEXTILE UNDER STONE FILL
42+75 TO 43+03 LT (SLOPE)
43+55 TO 44+25 RT (DITCH)

STONE FILL, TYPE IV
GEOTEXTILE UNDER STONE FILL
43+03 TO 43+19 LT & RT
43+35 TO 43+55 LT & RT

8 INCH UNDERDRAIN PIPE
41+50 TO 43+02 LT
43+60 TO 44+50 RT

UNDERDRAIN FLUSHING BASIN
41+50 LT
44+50 RT

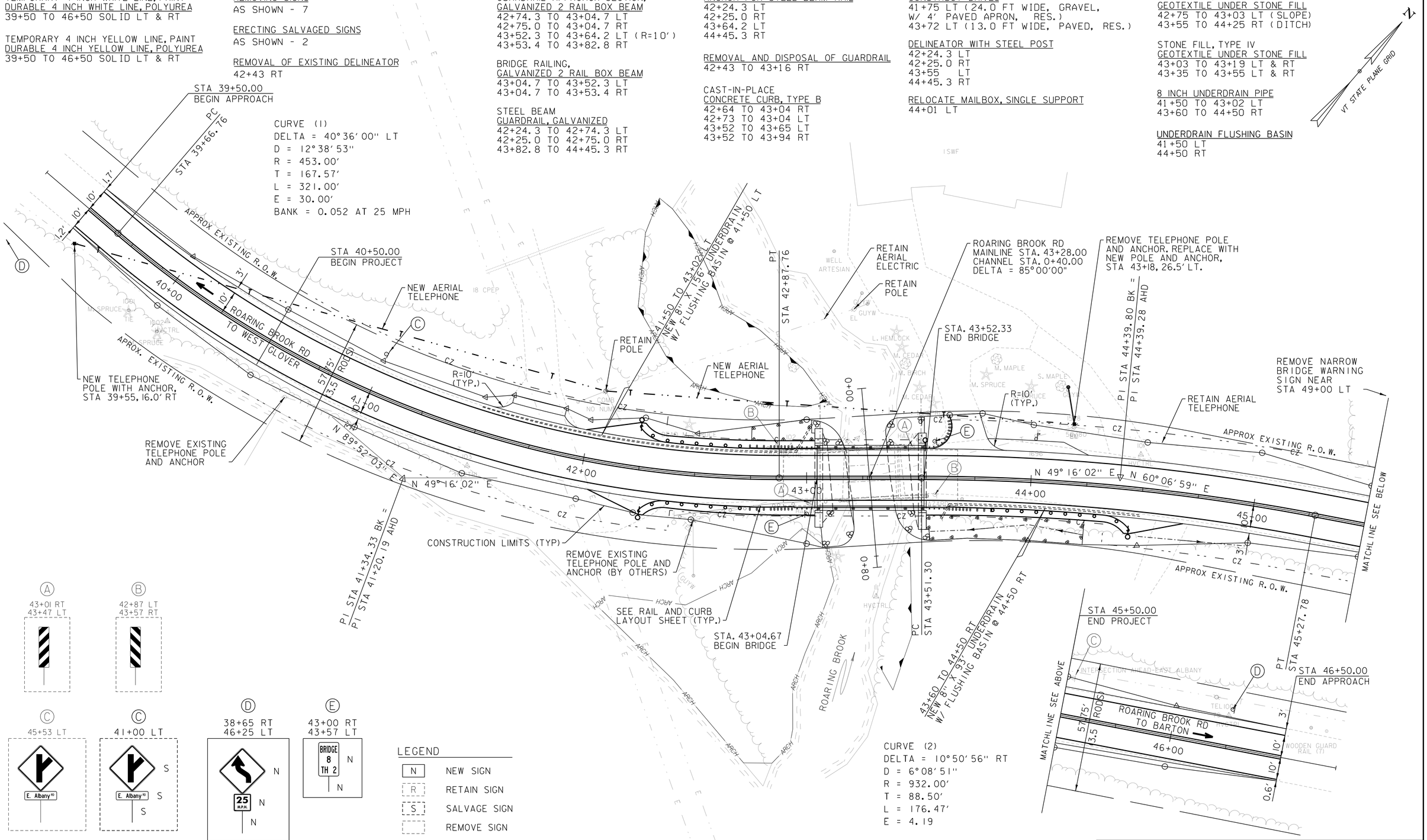


EXISTING BRIDGE DATA:
A 26-FOOT SPAN CONCRETE T-BEAM BRIDGE ON CAST-IN-PLACE CONCRETE ABUTMENTS ON SPREAD FOOTINGS CONSTRUCTED IN 1928.

| | |
|---|---|
| PROJECT NAME: BARTON | |
| PROJECT NUMBER: BRO 1449(31) | |
| FILE NAME: 11J068/cos/z11J068bdr.dgn | PLOT DATE: 12/17/2014 |
| PROJECT LEADER: J. BYATT | DRAWN BY: M. HALEY |
| DESIGNED BY: M. HALEY | CHECKED BY: P. SHEDD |
| LAYOUT SHEET | SHEET 16 OF 52 |

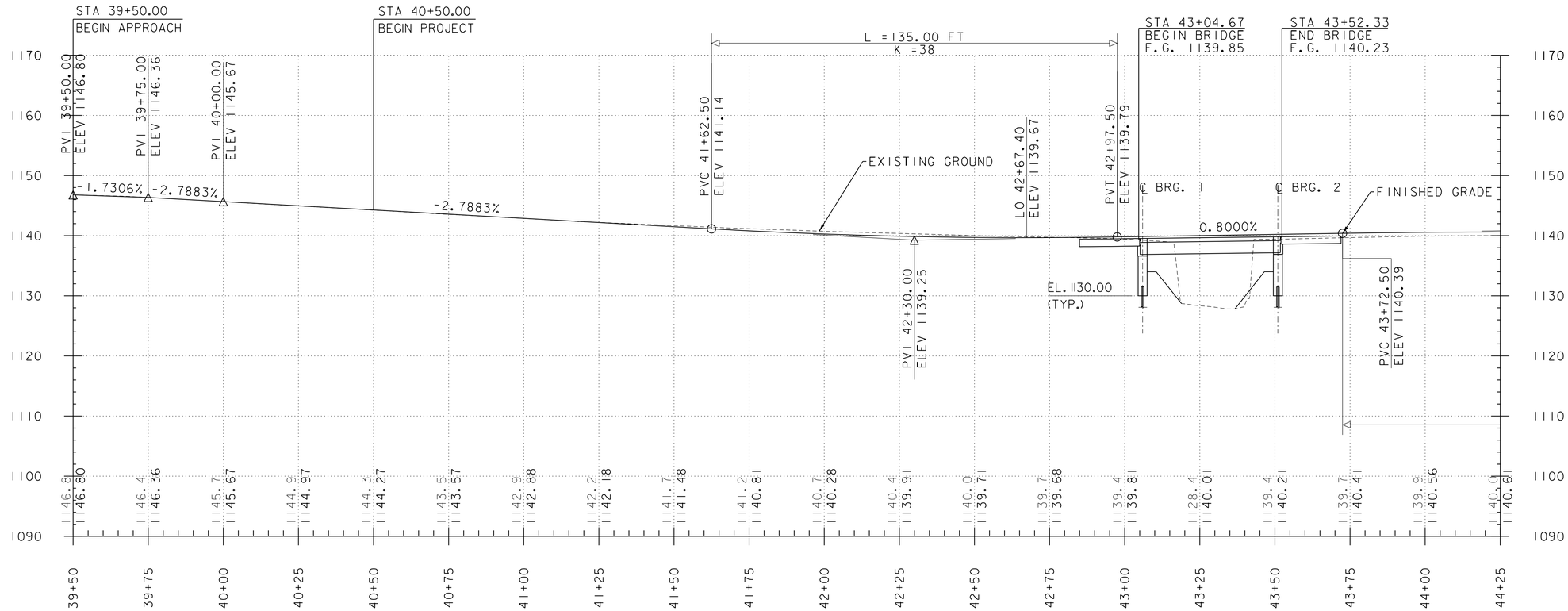


THE ELEVATIONS SHOWN TO THE NEAREST TENTH ARE THE OLD GROUND ALONG THE CENTERLINE.

THE ELEVATIONS SHOWN TO THE NEAREST HUNDREDTH ARE THE PROPOSED FINISHED GRADE ALONG THE CENTERLINE.

## ROARING BROOK ROAD PROFILE

HOR. SCALE 1" = 20'-0"
VER. SCALE 1" = 10'-0"

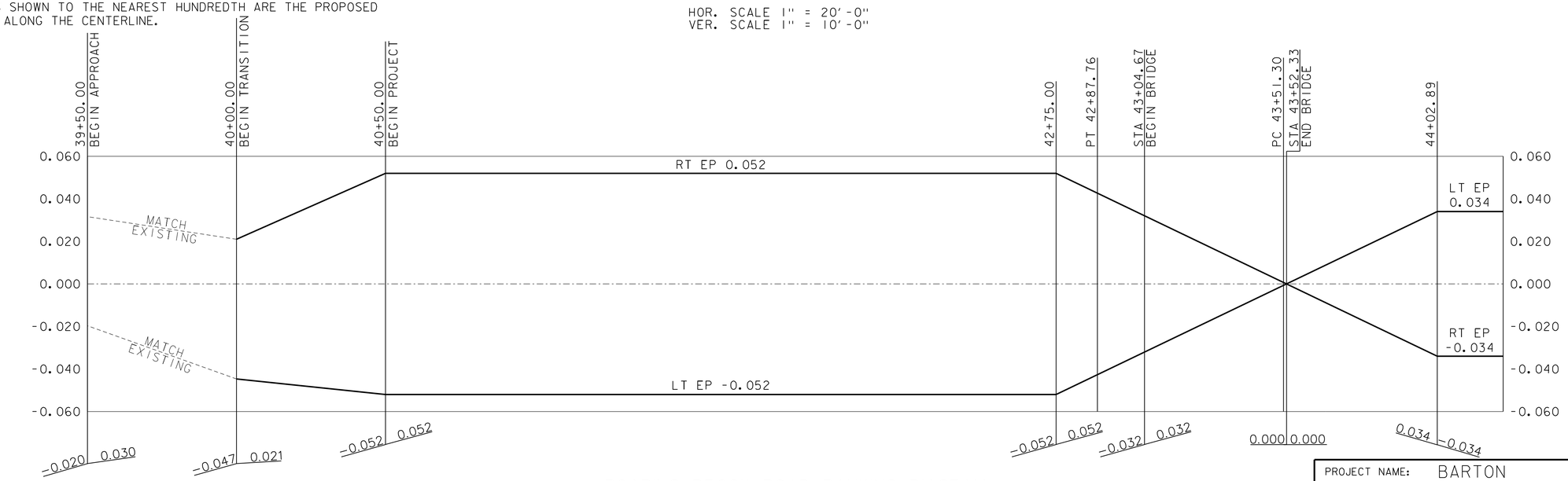


## ROARING BROOK ROAD BANKING DIAGRAM

NOT TO SCALE

| | |
|---|---|
| PROJECT NAME: BARTON | |
| PROJECT NUMBER: BRO 1449(31) | |
| FILE NAME: 11J068/cos/z11j068pro.dgn | PLOT DATE: 12/17/2014 |
| PROJECT LEADER: J. BYATT | DRAWN BY: M. HALEY |
| DESIGNED BY: M. HALEY | CHECKED BY: P. SHEDD |
| PROFILE AND BANKING DIAGRAM SHEET 1 | SHEET 17 OF 52 |

CLD 12-0174 MODEL: PR001

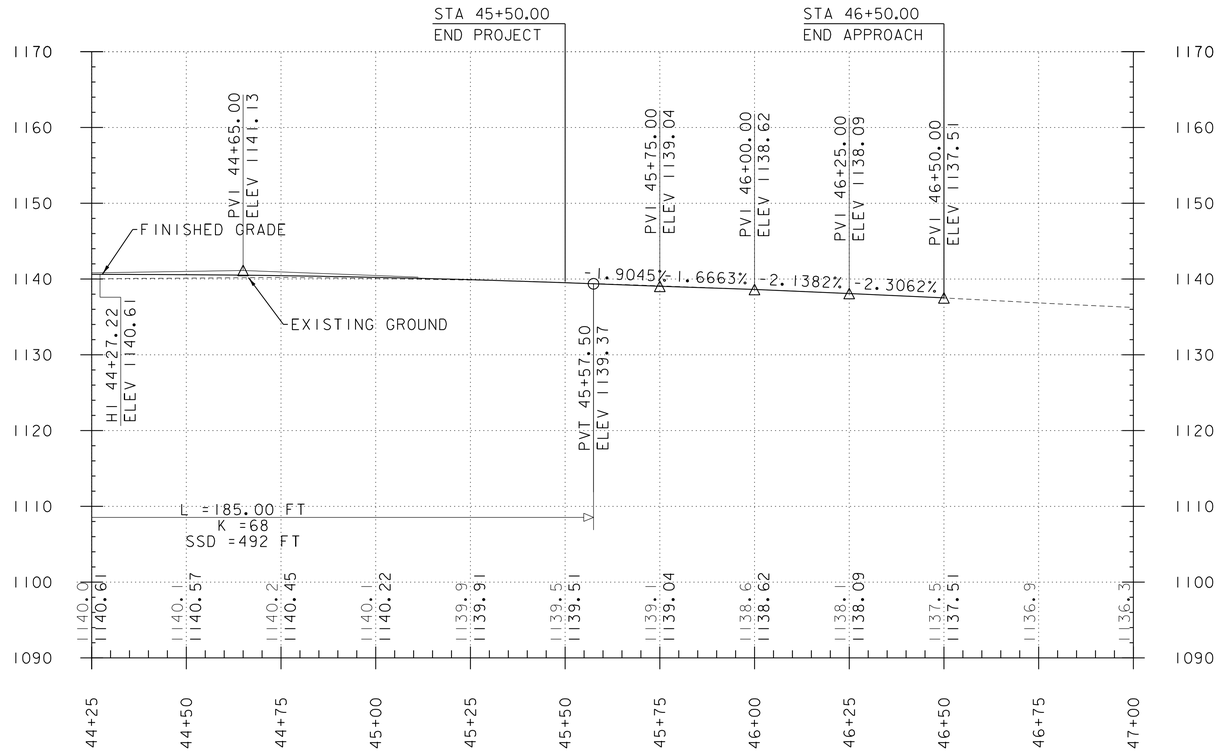


THE ELEVATIONS SHOWN TO THE NEAREST TENTH ARE THE OLD GROUND ALONG THE CENTERLINE.

THE ELEVATIONS SHOWN TO THE NEAREST HUNDREDTH ARE THE PROPOSED FINISHED GRADE ALONG THE CENTERLINE.

## ROARING BROOK ROAD PROFILE

HOR. SCALE 1" = 20'-0"
VER. SCALE 1" = 10'-0"

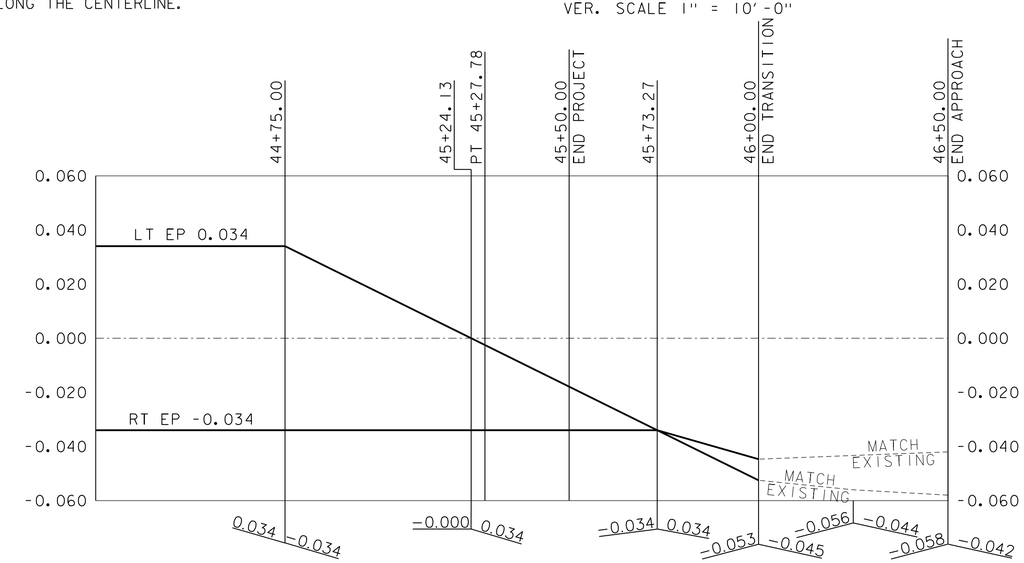


| | |
|---|---|
| PROJECT NAME: BARTON | |
| PROJECT NUMBER: BRO 1449(31) | |
| FILE NAME: 11J068/cos/z11j068pro.dgn | PLOT DATE: 12/17/2014 |
| PROJECT LEADER: J. BYATT | DRAWN BY: M. HALEY |
| DESIGNED BY: M. HALEY | CHECKED BY: P. SHEDD |
| PROFILE AND BANKING DIAGRAM SHEET 2 | SHEET 18 OF 52 |

CLD 12-0174 MODEL: PR002

NOTES

1. DETOUR ROUTES WILL BE DETERMINED BY THE TOWN. THE CONTRACTOR SHALL COORDINATE WITH THE TOWN AND THE ENGINEER.

2. THE CONTRACTOR SHALL BE RESPONSIBLE FOR PROVIDING SIGNAGE AS SHOWN ON THIS SHEET AND IN ACCORDANCE WITH THE LATEST EDITION OF THE MUTCD AND VTRANS STANDARDS. PAYMENT FOR SIGNAGE WILL BE MADE UNDER ITEM 641.10, TRAFFIC CONTROL.

3. TEMPORARY TRAFFIC BARRIER WILL BE PAID FOR UNDER ITEM 621.90.

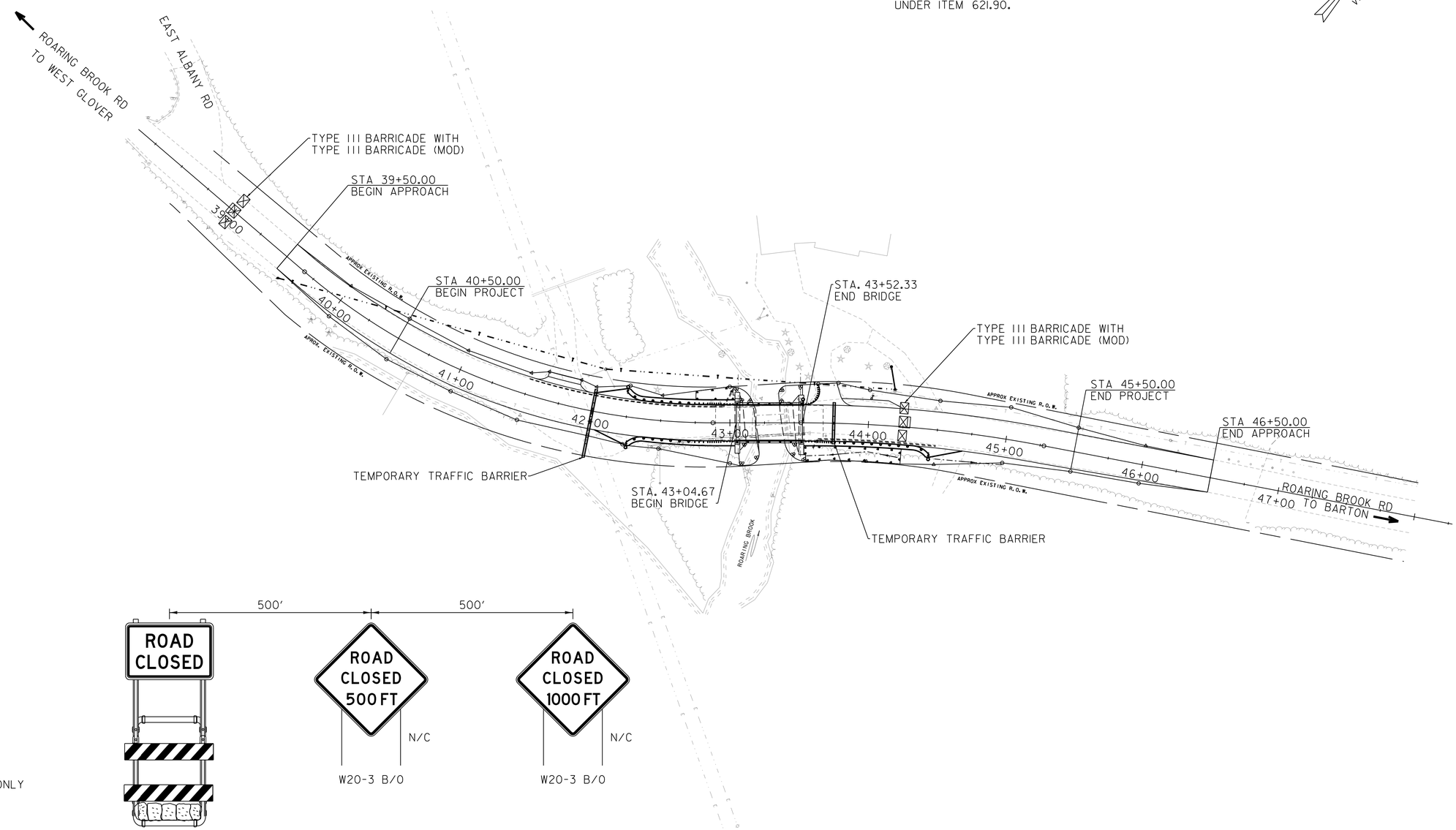





R11-2 B/W SIGN MOUNTED ON TYPE III BARRICADE (MODIFIED)

LEGEND

| | |
|---|---|
| N/C | NEW SIGN/CONSTRUCTION ONLY |
| B/O | BLACK/ORANGE |
| B/W | BLACK/WHITE |
| ☒ | TYPE III BARRICADE |
| ☒ | TYPE III BARRICADE (MOD.) |
| ▬ | TEMPORARY TRAFFIC BARRIER |

0 40 80
(SCALE 1" = 40')

CONSULTING ENGINEERS

| | |
|---|---|
| PROJECT NAME: BARTON | |
| PROJECT NUMBER: BRO 1449(31) | |
| FILE NAME: 11j068/cos/z11j068bdrtcp.dgn | PLOT DATE: 12/17/2014 |
| PROJECT LEADER: J. BYATT | DRAWN BY: M. HALEY |
| DESIGNED BY: M. HALEY | CHECKED BY: P. SHEDD |
| TRAFFIC CONTROL SHEET | SHEET 19 OF 52 |

STATE OF VERMONT
AGENCY OF TRANSPORTATION

# TRAFFIC SIGN SUMMARY SHEET

SHSM = FHWA 2004 STANDARD HIGHWAY SIGNS AND MARKINGS BOOK AND THE 2012 SUPPLEMENT TO THE 2004 EDITION

| MILEMARKER, STATION, OR SIGN NUMBER | SIGN LEGEND | SIGN DIMENSIONS | | | NEW & SALVAGED SIGNS | | | | EXIST POST | | NEW SIGN POSTS | | | | | | | | | | | | | | | | | | | REMARKS | SIGN DETAIL | | |
|---|---|---|---|---|---|---|---|---|---|---|---|---|---|---|---|---|---|---|---|---|---|---|---|---|---|---|---|---|---|---|---|---|---|
| | | | | | | | | | | | | SQUARE STEEL (in) | | | | | TUBULAR ALUMINUM Ø (in) | | | TUBULAR STEEL Ø (in) | | | | | W-SHAPE STEEL | | | | | | | | |
| | | EA | WIDTH (in) | HEIGHT (in) | "A" | "B" | SALV SIGN | SALV TIS | RETAIN | SALVAGE | NO. OF POSTS | 1.75 | 2.0 | 2.5 | ANCHOR | SLEEVE | 3.0 | 4.0 | 4.0 MOD | FOUND-ATION | 3.0 | 3.5 | 4.0 | 5.0 | FTG. SIZE 24" | FTG. SIZE 30" | WEIGHT | POST SIZE | SIGN FRAME REQUIRED | | SHSM | DETAIL ON SHEET NUMBER | STD. SHEET NUMBER |
| | | | | | | | | | | | | lb/ft | | | | | lb/ft | | | | lb/ft | | | | | | | | | | | | |
| | | | | | | | | | | | | 1.88 | 2.42 | 3.35 | | | 1.3 | 1.7 | 1.7 | | 7.6 | 9.0 | 10.8 | 14.6 | | | | | | | | | |
| TH 2 38+65 RT | | 1 | 30 | 30 | 6.25 | | | | | | 1 | | X | | X | | | | | | | | | | | | | | | WI-2L | | |
| | 25 M.P.H. | 1 | 18 | 18 | 2.25 | | | | | | | | | | | | | | | | | | | | | | | | | WI3-1P | | |
| 41+00 LT | | | | | | | 1 | | | 1 | | | | | | | | | | | | | | | | | | | | | | | |
| | E. Albany RD | | | | | | 1 | | | | | | | | | | | | | | | | | | | | | | | | | | |
| 43+00 RT | BRIDGE 8 TH 2 | 1 | 6 | 10 | 0.42 | | | | | | 1 | X | | | X | | | | | | | | | | | | | | | VD-701 | | | T-42 |
| 43+57 LT | BRIDGE 8 TH 2 | 1 | 6 | 10 | 0.42 | | | | | | 1 | X | | | X | | | | | | | | | | | | | | | VD-701 | | | T-42 |
| 46+25 LT | | 1 | 30 | 30 | 6.25 | | | | | | 1 | | X | | X | | | | | | | | | | | | | | | WI-2L | | |
| | 25 M.P.H. | 1 | 18 | 18 | 2.25 | | | | | | | | | | | | | | | | | | | | | | | | | WI3-1P | | |
| | ROUNDING | | | | 0.16 | | | | | | | 0 | 0 | | | | | | | | | | | | | | | | | | | | |
| | | | | | | | | | | | | FT 20 | FT 30 | FT | | EA | LB | LB | LB | | LB | LB | LB | LB | | | | | | | | | |
| | SHEET TOTALS | | | | SF 18.00 | SF | EA. 2 | SF | | | | | | FT 50 | | | | LB | | EA. | | LB | | | EA. | EA. | LB | | | | | |

FINAL POST LENGTHS ARE TO BE DETERMINED IN THE FIELD. POST SIZES ARE COMPUTED BASED ON INFORMATION FURNISHED ON THE STANDARD SHEETS AND VAOT "SIGN POST DESIGN GUIDELINE."

CLD 12-0121

CONSULTING ENGINEERS

PROJECT NAME: BARTON
PROJECT NUMBER: BRO 1449(31)

FILE NAME: z11j068tsdet.dgn
PROJECT LEADER: J. BYATT
DESIGNED BY: M. HALEY
TRAFFIC SIGN SUMMARY SHEET

PLOT DATE: 12/17/2014
DRAWN BY: W. GORDON
CHECKED BY: P. SHEDD
SHEET 20 OF 52

# GENERAL NOTES

## SIGN DESIGN AND FABRICATION NOTES

1. ALL SIGNS SHALL BE DESIGNED IN ACCORDANCE WITH THE LATEST REVISION OF THE 2009 MUTCD, THE 2004 STANDARD HIGHWAY SIGNS AND MARKINGS (SHSM), AND THE 2012 SUPPLEMENT TO THE 2004 EDITION (SHSM) DETAILS AS AVAILABLE, VAOT STANDARDS OR AS DETAILED IN THE PLANS.

2. ALL LETTERS AND NUMBERS USED FOR ALL SIGNS SHALL CONFORM TO THE APPLICABLE FONT AS DEFINED AND DETAILED IN THE 2004 SHSM AND THE 2012 SUPPLEMENT.

3. ALL ARROWS AND SYMBOLS SHALL CONFORM WITH THE 2004 SHSM AND THE 2012 SUPPLEMENT UNLESS OTHERWISE DETAILED IN THE PLANS.

4. COLORS USED ON ALL SIGNS SHALL CONFORM WITH THE REQUIREMENTS OF SECTION 1A.12 OF THE MUTCD.

5. SIGN SHEETING FOR FLUORESCENT YELLOW AND FLUORESCENT YELLOW GREEN SHALL BE AASHTO M268 (ASTM D4956) TYPE VII, VIII OR IX. ALL OTHER SIGN SHEETING SHALL BE TYPE III OR IV.

6. SHEETING TYPES AND MANUFACTURERS SHALL NOT BE MIXED ON A SINGLE SIGN ASSEMBLY. SHEETING COLOR/TYPE SHOULD BE BY THE SAME MANUFACTURER AND BE CONSISTENT THROUGHOUT THE PROJECT UNLESS OTHERWISE DETAILED ON THE PLANS.

7. SIGN BASE MATERIAL FOR DELINEATORS AND MILE MARKER PLAQUES (VD-700) SHALL BE 0.063" THICK FLAT SHEET ALUMINUM. ALL TOWN HIGHWAY SIGNS (D3-1) SHALL BE 0.125" THICK FLAT SHEET ALUMINUM OR EXTRUDED ALUMINUM WITH 0.25 INCH FLANGE AND 0.090 INCH WEB. UNLESS OTHERWISE NOTED ON THE PLANS, ALL OTHER SIGNS SHALL BE FLAT SHEET ALUMINUM WITH THE FOLLOWING MINIMUM THICKNESSES:

| | | | |
|---|---|---|---|
| SIGN SIZE | 12" X 12" | | |
| | 18" X 18" | | |
| | 21" X 15" | | |
| | 24" X 8" | | |
| | 24" X 10" | | 48" X 18" |
| | 24" X 12" | 36" X 12" | 48" X 24" |
| | 24" X 18" | 36" X 15" | 48" X 30" |
| | 24" X 24" | 36" X 18" | 48" X 42" |
| | 24" X 30" | 36" X 24" | 48" X 48" |
| | 30" X 15" | 36" X 36" | 48" X 60" |
| | 30" X 18" | 36" X 42" | 72" X 10" |
| | 30" X 30" | 36" X 48" | 72" X 12" |
| | 30" X 42" | 36" X 54" | 72" X 20" |
| THICKNESS | 0.080" | 0.100" | 0.125" |

## SIGN POST NOTES

1. ALL SIGN POSTS SHALL BE INSTALLED IN A NEW ANCHOR. ALL SIGNS INSTALLED IN PAVED OR CONCRETE ISLANDS OR SIDEWALKS SHALL ALSO BE INSTALLED WITH AN 18" SLEEVE. PAYMENT FOR SLEEVE SHALL BE INCIDENTAL TO THE SIGN POST.

2. 1.75" SQUARE STEEL POSTS SHALL BE 14 GAUGE STEEL. 2.0" AND 2.5" SQUARE STEEL POSTS SHALL BE 12 GAUGE STEEL.

## SIGN INSTALLATION NOTES

1. THE CONTRACTOR SHALL BE RESPONSIBLE FOR REPAIRING ANY DAMAGE TO PRIVATE OR PUBLIC PROPERTY CAUSED BY THE CONTRACTOR, AT THE CONTRACTOR'S EXPENSE.

2. ALL SIGNS WITHIN THE PROJECT LIMITS ARE TO BE REPLACED UNLESS OTHERWISE NOTED OR AS DIRECTED BY THE ENGINEER. SIGN LOCATIONS AS SHOWN ON THE PLANS ARE APPROXIMATE. EXACT LOCATIONS TO BE DETERMINED IN THE FIELD.

3. ALL SIGN PLACEMENT SHALL BE IN CONFORMANCE WITH VAOT STANDARD E-121 STANDARD SIGN PLACEMENT CONVENTIONAL ROADS, UNLESS OTHERWISE NOTED.

4. ALL SIGNS, FRAMES, MOUNTING HARDWARE, POSTS, AND ANCHORS FOR ANY SIGN ASSEMBLY SHALL BE REPLACED AT THE SAME TIME. MIXING OF OLD AND NEW SIGNS ON THE SAME ASSEMBLY WILL NOT BE ALLOWED EXCEPT AS NOTED ON THE PLANS.

5. NEW SIGNS WITH THEIR GREATER NIGHTTIME RETROREFLECTIVITY CAN OBSCURE OLDER SIGNS MOUNTED ADJACENT TO THEM. TO AVOID CONFUSION OF ROAD USERS, WORK SHALL BE COORDINATED SUCH THAT ALL SIGNS ASSOCIATED WITH A CURVE, INTERSECTION, OR SPEED CHANGE, SHALL BE REPLACED ON THE SAME DAY AND NOT LEFT INCOMPLETE NOR WITH A MIXTURE OF OLD AND NEW SIGNS WITHIN A GROUP OF ASSOCIATED SIGNS.

NOT TO SCALE

CONSULTING ENGINEERS

| | |
|---|---|
| PROJECT NAME: BARTON | |
| PROJECT NUMBER: BRO 1449(31) | |
| FILE NAME: z11j068tsdet.dgn | PLOT DATE: 12/17/2014 |
| PROJECT LEADER: J. BYATT | DRAWN BY: W. GORDON |
| DESIGNED BY: M. HALEY | CHECKED BY: P. SHEDD |
| SIGN DETAIL SHEET | SHEET 21 OF 52 |

CLD 12-0121

## SOIL CLASSIFICATION

AASHTO

| | |
|---|---|
| A1 | Gravel and Sand |
| A3 | Fine Sand |
| A2 | Silty or Clayey Gravel and Sand |
| A4 | Silty Soil - Low Compressibility |
| A5 | Silty Soil - Highly Compressible |
| A6 | Clayey Soil - Low Compressibility |
| A7 | Clayey Soil - Highly Compressible |

## ROCK QUALITY DESIGNATION

| R.Q.D. (%) | ROCK DESCRIPTION |
|---|---|
| <25 | Very Poor |
| 25 to 50 | Poor |
| 51 to 75 | Fair |
| 76 to 90 | Good |
| >90 | Excellent |

## SHEAR STRENGTH

| UNDRAINED SHEAR STRENGTH IN P.S.F. | CONSISTENCY |
|---|---|
| <250 | Very Soft |
| 250-500 | Soft |
| 500-1000 | Med. Stiff |
| 1000-2000 | Stiff |
| 2000-4000 | Very Stiff |
| >4000 | Hard |

## CORRELATION GUIDE OF "N" TO DENSITY/CONSISTENCY

| DENSITY (GRANULAR SOILS) | | CONSISTENCY (COHESIVE SOILS) | |
|---|---|---|---|
| N | DESCRIPTIVE TERM | N | DESCRIPTIVE TERM |
| <5 | Very Loose | <2 | Very Soft |
| 5-10 | Loose | 2-4 | Soft |
| 11-24 | Med. Dense | 5-8 | Med. Stiff |
| 25-50 | Dense | 9-15 | Stiff |
| >50 | Very Dense | 16-30 | Very Stiff |
| | | 31-60 | Hard |
| | | >60 | Very Hard |

## COMMONLY USED SYMBOLS

| | |
|---|---|
| ▼ | Water Elevation |
| ⊗ | Standard Penetration Boring |
| ⊕ | Auger Boring |
| ⊙ | Rod Sounding |
| S | Sample |
| N | Standard Penetration Test<br>Blow Count Per Foot For:<br>2" O.D. Sampler<br>1 3/8" I.D. Sampler<br>Hammer Weight Of 140 Lbs.<br>Hammer Fall Of 30" |
| VS | Field Vane Shear Test |
| US | Undisturbed Soil Sample |
| B | Blast |
| DC | Diamond Core |
| MD | Mud Drill |
| WA | Wash Ahead |
| HSA | Hollow Stem Auger |
| AX | Core Size 1 1/8" |
| BX | Core Size 1 5/8" |
| NX | Core Size 2 1/8" |
| M | Double Tube Core Barrel Used |
| LL | Liquid Limit |
| PL | Plastic Limit |
| PI | Plasticity Index |
| NP | Non Plastic |
| w | Moisture Content (Dry Wgt. Basis) |
| D | Dry |
| M | Moist |
| MTW | Moist To Wet |
| W | Wet |
| Sat | Saturated |
| Bo | Boulder |
| Gr | Gravel |
| Sa | Sand |
| Si | Silt |
| Cl | Clay |
| HP | Hardpan |
| Le | Ledge |
| NLTD | No Ledge To Depth |
| CNPF | Can Not Penetrate Further |
| TLOB | Top of Ledge Or Boulder |
| NR | No Recovery |
| Rec. | Recovery |
| %Rec. | Percent Recovery |
| RQD | Rock Quality Designation |
| CBR | California Bearing Ratio |
| < | Less Than |
| > | Greater Than |
| R | Refusal (N > 100) |
| VTSPG | NAD83 - See Note 7 |

COLOR

| | | | |
|---|---|---|---|
| blk | Black | pnk | Pink |
| bl | Blue | pu | Purple |
| brn | Brown | rd | Red |
| dk | Dark | tn | Tan |
| gry | Gray | wh | White |
| gn | Green | yel | Yellow |
| lt | Light | mltc | Multicolored |
| or | Orange | | |

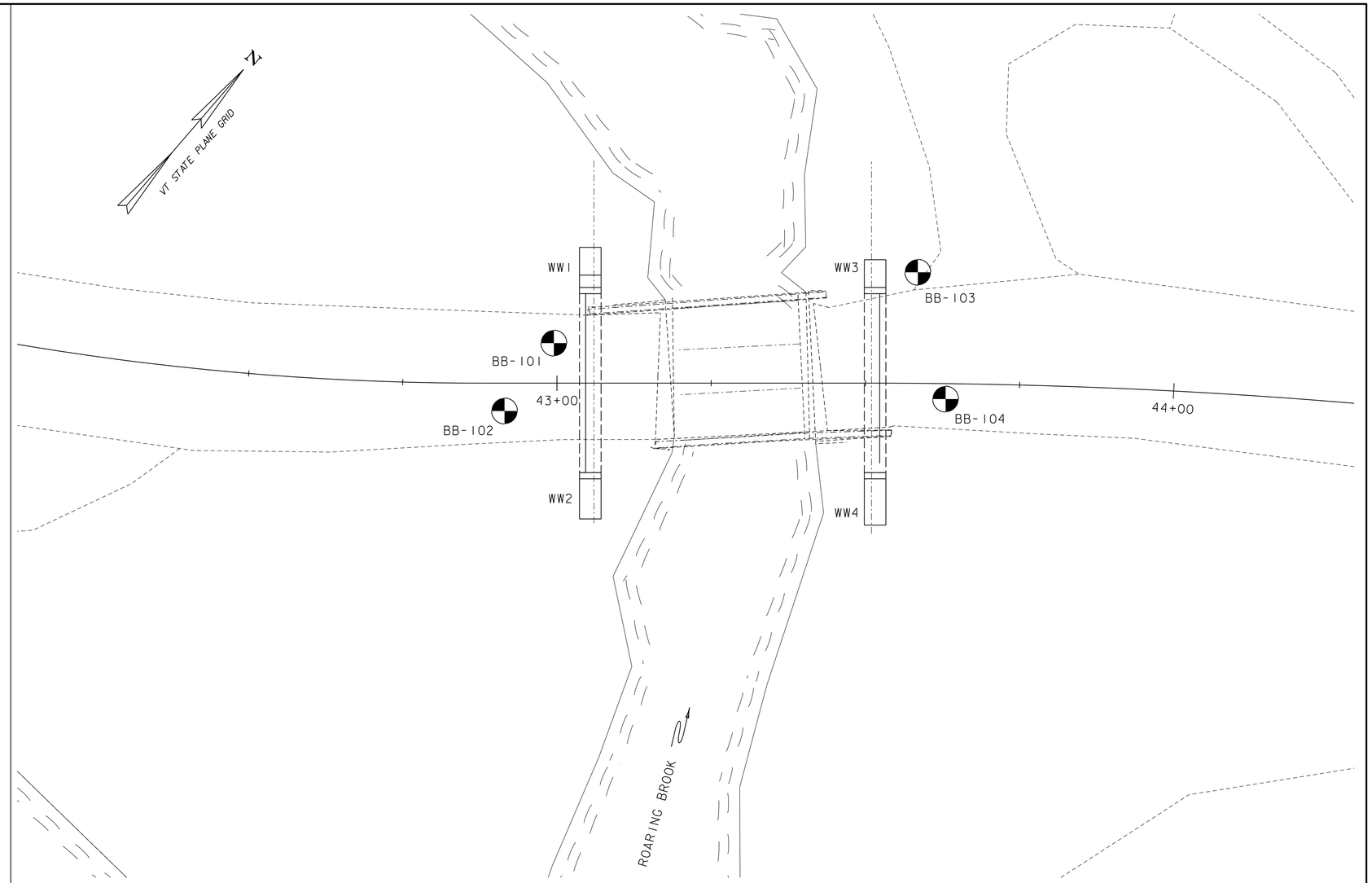


## BORING PLAN

SCALE 1" = 10'-0"
10 0 10

## BORING CHART

| HOLE NO. | SURV. STATION | OFFSET | GROUND ELEV. | ELEV. TLOB |
|---|---|---|---|---|
| BB-101 | 42+99.5 | 6.5' LT | 1139.0' | N/A |
| BB-102 | 42+91.5 | 4.5' RT | 1139.0' | 1060.0' |
| BB-103 | 43+58.5 | 18.0' LT | 1139.0' | 1061.0' |
| BB-104 | 43+63.0 | 2.5' RT | 1139.0' | N/A |

## DEFINITIONS (AASHTO)

BEDROCK (LEDGE) - Rock in its native location of indefinite thickness.

BOULDER - A rock fragment with an average dimension > 12 inches.

COBBLE - Rock fragments with an average dimension between 3 and 12 inches.

GRAVEL - Rounded particles of rock < 3" and > 0.0787" (#10 sieve).

SAND - Particles of rock < 0.0787" (#10 sieve) and > 0.0029" (#200 sieve).

SILT - Soil < 0.0029" (#200 sieve), non or slightly plastic and exhibits no strength when air-dried.

CLAY - Fine grained soil, exhibits plasticity when moist and considerable strength when air-dried.

VARVED - Alternate layers of silt and clay.

HARDPAN - Extremely dense soil, cemented layer, not softened when wet.

MUCK - Soft organic soil (containing > 10% organic material.

MOISTURE CONTENT - Weight of water divided by dry weight of soil.

FLOWING SAND - Granular soil so saturated (loose) that it flows into drill casing during extraction of wash rod.

STRIKE - Angle from magnetic north to line of intersection of bed with a horizontal plane.

DIP - Inclination of bed with a horizontal plane.

## GENERAL NOTES

1. The subsurface explorations shown herein were made between 6/24/13 and 6/25/13 by Golder Associates, Inc.
2. Soil and rock classifications, properties and descriptions are based on engineering interpretation from available subsurface information by the Agency and may not necessarily reflect actual variations in subsurface conditions that may be encountered between individual boring or sample locations.
3. Observed water levels and/or conditions indicated are as recorded at the time of exploration and may vary according to the prevailing rainfall, methods of exploration and other factors.
4. Engineering judgment was exercised in preparing the subsurface information presented herein. Analysis and interpretation of subsurface data was performed and interpreted for Agency design and estimating purposes. Presentation of the information in the Contract is intended to provide the Contractor access to the same data available to the Agency. The subsurface information is presented in good faith and is not intended as a substitute for personal investigation, independent interpretation, independent analysis or judgment by the Contractor.
5. Pictorial structure details shown on the boring plan layout or soils profile are for illustrative purposes only and may not accurately portray final contract details.
6. Terminology used on boring logs to describe the hardness, degree of weathering, and spacing of fractures, joints and other discontinuities in the bedrock is defined in the AASHTO Manual on Subsurface Investigations, 1988.
7. Northing and Easting coordinates are shown in Vermont State Plane Grid North American Datum 1983 in meters and survey feet.

CONSULTING ENGINEERS

PROJECT NAME: BARTON
PROJECT NUMBER: BRO 1449(31)

FILE NAME: 11j068/cos/z11j068bor.dgn
PROJECT LEADER: J. BYATT
DESIGNED BY: S. BEAUMONT
BORING INFORMATION SHEET

PLOT DATE: 12/17/2014
DRAWN BY: M. SMITH
CHECKED BY: J. BYATT
SHEET 22 OF 52

CLD 12-0174 MODEL: BOR01

STATE OF VERMONT
AGENCY OF TRANSPORTATION
MATERIALS & RESEARCH SECTION
SUBSURFACE INFORMATION

BORING NUMBER: BB-101
SHEET 1 of 2
DATE STARTED: 2/14/13
DATE COMPLETED: 2/15/13

PROJECT NAME: CLD Roaring Brook Bridge
SITE NAME: Barton, VT
STATION: 42+99.5
OFFSET: LT 6.5'
VTSPG: N 816206.00 ft E 1714717.00 ft

PROJECT NUMBER: 123-87464
SITE NUMBER: BRO 1449(31)
GROUND ELEVATION: 1139.0 ft
GROUNDWATER DEPTH: 9.3 ft 2/15/13
PROJECT PIN NUMBER: Barton, VT TH 2 BR 8

BORING CREW:
DRILLER: P. LaBoissier
LOGGER: N. Chinburg
BORING RIG: Mobile B-47 Truck

BORING TYPE: WASH BORE
SAMPLE TYPE: SPLIT BARREL
HAMMER TYPE:
CHECKED BY: MRH

| DEPTH (ft) | SYMBOL | CLASSIFICATION OF MATERIALS (Description) | BLOWS PER 6 IN (N VALUE) | M.C. (%) | AASHTO GRAVEL (%) | AASHTO SAND (%) | AASHTO FINES (%) |
|---|---|---|---|---|---|---|---|
| | | 0.0 ft - 0.5 ft, Asphalt. | | | | | |
| | | 3.0 ft - 5.0 ft, A-1-B, GrSa, Brown, wet, very dense, fine to coarse SAND and GRAVEL (GM) [Sample 1D]., Rec. = 1.58 ft | 98-86-57-13 (R) | | | | |
| 5 | | 5.0 ft - 7.0 ft, A-2-4, Sa, Brown, wet, compact, fine to medium SAND (SP) [Sample 2D]., Rec. = 0.42 ft | 9-5-7-5 (12) | | | | |
| | | 7.0 ft - 9.0 ft, A-2-4, Sa, Brown-gray, wet, very loose, fine SAND, some fine to coarse gravel, trace medium sand, trace organics (wood) (SP) [Sample 3D]., Rec. = 1.33 ft | 1-2-1-2 (3) | | | | |
| 10 | | 9.0 ft - 10.0 ft, A-2-4, GrSiSa, Brown, wet, loose, silty gravelly SAND with rust colored staining (SM) [Sample 4D - Top 12"]., Rec. = 1.42 ft | 1-4-5-7 (9) | | 16.6 | 54.3 | 29.1 |
| | | 10.0 ft - 11.0 ft, A-6, SiCl, Gray, wet, stiff, CLAY with lenses of silt and fine to medium sand, medium plasticity (CL) [Sample 4D - Bottom 7"]. | | | | | |
| | | 13.0 ft - 14.0 ft, Boulder based on drill behavior. | | | | | |
| 15 | | 14.0 ft - 16.0 ft, A-2-4, GrSaSi, Gray, wet, very dense, silty gravelly SAND (SM) [Sample 5D]., Rec. = 0.58 ft | 16-77-21-18 (98) | | | | |
| 20 | | 19.0 ft - 21.0 ft, No recovery [Sample 6D]., Rec. = 0.0 ft | 18-34-34-64 (68) | | | | |
| 25 | | 24.0 ft - 26.0 ft, A-4, GrSaSi, Gray, wet, very dense, sandy SILT, trace fine gravel (ML) [Sample 7D]., Rec. = 1.25 ft | 20-40-48-49 (88) | | | | |
| | | 29.0 ft - 31.0 ft, A-4, SaSi, Gray, wet, very dense, sandy SILT (ML) [Sample 8D]., Rec. = 1.0 ft | 25-49-65-78 | | 6.9 | 23.7 | 69.4 |

BOTTOM OF ABUT. 1
EL. 1130.0'

LOG OF BORING & WELL CLD BARTON BRIDGE.GPJ VT AOT.GDT 8/25/14

STATE OF VERMONT
AGENCY OF TRANSPORTATION
MATERIALS & RESEARCH SECTION
SUBSURFACE INFORMATION

BORING NUMBER: BB-101
SHEET 2 of 2
DATE STARTED: 2/14/13
DATE COMPLETED: 2/15/13

PROJECT NAME: CLD Roaring Brook Bridge
SITE NAME: Barton, VT
STATION: 42+99.5
OFFSET: LT 6.5'
VTSPG: N 816206.00 ft E 1714717.00 ft

PROJECT NUMBER: 123-87464
SITE NUMBER: BRO 1449(31)
GROUND ELEVATION: 1139.0 ft
GROUNDWATER DEPTH: 9.3 ft 2/15/13
PROJECT PIN NUMBER: Barton, VT TH 2 BR 8

BORING CREW:
DRILLER: P. LaBoissier
LOGGER: N. Chinburg
BORING RIG: Mobile B-47 Truck

BORING TYPE: WASH BORE
SAMPLE TYPE: SPLIT BARREL
HAMMER TYPE:
CHECKED BY: MRH

| DEPTH (ft) | SYMBOL | CLASSIFICATION OF MATERIALS (Description) | BLOWS PER 6 IN (N VALUE) | M.C. (%) | AASHTO GRAVEL (%) | AASHTO SAND (%) | AASHTO FINES (%) |
|---|---|---|---|---|---|---|---|
| | | | (R) | | | | |
| 35 | | 34.0 ft - 36.0 ft, A-4, SaSi, Gray, wet, very dense, fine SAND, increasing silt with depth (SM) [Sample 9D]., Rec. = 0.75 ft | 24-62-54-32 (R) | | | | |
| 40 | | 39.0 ft - 41.0 ft, A-4, Si, Gray, wet, very dense, SILT, some fine sand (ML) [Sample 10D]., Rec. = 1.58 ft | 20-25-32-35 (57) | | | | |
| 45 | | 44.0 ft - 46.0 ft, A-6, Cl, Gray, wet, hard, CLAY, low plasticity (CL) [Sample 11D]., Rec. = 2.0 ft | 9-14-17-26 (31) | | | | |
| 50 | | 49.0 ft - 51.0 ft, A-4, SaSi, Gray, wet, dense, sandy SILT, some black staining (ML) [Sample 12D]., Rec. = 1.83 ft | 16-14-19-25 (33) | | | | |
| | | 51.0 ft, Completed boring at 51 ft-bgs in soil. Backfilled with cuttings and sealed with cold patch asphalt upon completion. Hole stopped @ 51.0 ft | | | | | |
| 55 | | | | | | | |

LOG OF BORING & WELL CLD BARTON BRIDGE.GPJ VT AOT.GDT 8/25/14

CLD 12-01/14 MODEL: BOR02

PROJECT NAME: BARTON
PROJECT NUMBER: BRO 1449(31)

FILE NAME: 11j068/cos/z11j068bor.dgn
PROJECT LEADER: J. BYATT
DESIGNED BY: S. BEAUMONT
BORING LOGS (1 OF 4)

PLOT DATE: 12/17/2014
DRAWN BY: M. SMITH
CHECKED BY: J. BYATT
SHEET 23 OF 52

STATE OF VERMONT
AGENCY OF TRANSPORTATION
MATERIALS & RESEARCH SECTION
SUBSURFACE INFORMATION

BORING NUMBER: BB-102
SHEET 1 of 3
DATE STARTED: 2/13/13
DATE COMPLETED: 2/14/13

PROJECT NAME: CLD Roaring Brook Bridge
SITE NAME: Barton, VT
STATION: 42+91.5
OFFSET: RT 4.5'
VTSPG: N 816192.00 ft E 1714718.00 ft

PROJECT NUMBER: 123-87464
SITE NUMBER: BRO 1449(31)
GROUND ELEVATION: 1139.0 ft
GROUNDWATER DEPTH: 5.4 ft 2/14/13
PROJECT PIN NUMBER: Barton, VT TH 2 BR 8

BORING CREW:
DRILLER: P. LaBoissier
LOGGER: N. Chinburg
BORING RIG: Mobile B-47 Truck

BORING TYPE: WASH BORE
SAMPLE TYPE: SPLIT BARREL
HAMMER TYPE:
CHECKED BY: MRH

| DEPTH (ft) | SYMBOL | CLASSIFICATION OF MATERIALS (Description) | BLOWS PER 6 IN (N VALUE) | M.C. (%) | AASHTO GRAVEL (%) | AASHTO SAND (%) | AASHTO FINES (%) | LL (%) | PI (%) |
|---|---|---|---|---|---|---|---|---|---|
| | | 0.0 ft - 0.5 ft, Asphalt. | | | | | | | |
| | | 1.0 ft - 1.3 ft, A-1-B, GrSa, Dark brown, moist, very dense, fine to coarse SAND and GRAVEL (GW) [Sample 1D]., Rec. = 0.25 ft | 100/3" (R) | | | | | | |
| | | 2.0 ft - 2.4 ft, A-2-4, GrSa, Dark brown, moist, very dense, fine to medium SAND, trace coarse sand and gravel (SP) [Sample 2D]., Rec. = 0.42 ft | 105/5" (R) | | | | | | |
| 5 | | 3.0 ft - 5.0 ft, A-2-4, GrSaSi, Brown, moist, dense, fine to coarse SAND, more fine sand with depth (SP) [Sample 3D]., Rec. = 1.0 ft | 38-36-13-9 (49) | | | | | | |
| | | 5.0 ft - 7.0 ft, A-2-4, GrSaSi, Brown, moist, compact, fine to coarse SAND, some gravel (SP) [Sample 4D]., Rec. = 0.92 ft | 9-11-5-10 (16) | | | | | | |
| | | 7.0 ft - 9.0 ft, Wash in spoon, otherwise no recovery [Sample 5D]. | | | | | | | |
| 10 | | 9.0 ft - 11.0 ft, A-6, Cl, Gray, wet, stiff, CLAY, some fine sand, low plasticity, sand in ~1mm lenses (CL) [Sample 6D]., Rec. = 1.5 ft | 2-3-8-17 (11) | 21.0 | | | | 25 | 11 |
| 15 | | 14.0 ft - 16.0 ft, A-4, ClSi, Gray, wet, very stiff, clayey SILT, trace fine sand, low plasticity (ML) [Sample 7D]., Rec. = 1.25 ft | 11-10-10-8 (20) | | | | | | |
| 20 | | 19.0 ft - 21.0 ft, A-4, SaSi, Gray, wet, very dense, SILT, some fine sand (ML) [Sample 8D]., Rec. = 1.08 ft | 24-32-35-41 (67) | | 0.0 | 5.7 | 94.3 | | |
| 25 | | 24.0 ft - 26.0 ft, A-4, SaSi, Gray, wet, very dense, sandy SILT (ML) [Sample 9D]., Rec. = 1.25 ft | 21-36-41-52 (77) | | | | | | |
| | | 28.0 ft - 28.5 ft, Cobble based on drill behavior. | | | | | | | |
| | | 29.0 ft - 31.0 ft, Some wash in tip of spoon, otherwise no recovery [Sample 10D]., Rec. = 0.0 ft | 58-100/5" (R) | | | | | | |

BOTTOM OF ABUT. I
EL. 1130.0'

LOG OF BORING & WELL CLD BARTON BRIDGE.GPJ VT AOT GDT 8/25/14

STATE OF VERMONT
AGENCY OF TRANSPORTATION
MATERIALS & RESEARCH SECTION
SUBSURFACE INFORMATION

BORING NUMBER: BB-102
SHEET 2 of 3
DATE STARTED: 2/13/13
DATE COMPLETED: 2/14/13

PROJECT NAME: CLD Roaring Brook Bridge
SITE NAME: Barton, VT
STATION: 42+91.5
OFFSET: RT 4.5'
VTSPG: N 816192.00 ft E 1714718.00 ft

PROJECT NUMBER: 123-87464
SITE NUMBER: BRO 1449(31)
GROUND ELEVATION: 1139.0 ft
GROUNDWATER DEPTH: 5.4 ft 2/14/13
PROJECT PIN NUMBER: Barton, VT TH 2 BR 8

BORING CREW:
DRILLER: P. LaBoissier
LOGGER: N. Chinburg
BORING RIG: Mobile B-47 Truck

BORING TYPE: WASH BORE
SAMPLE TYPE: SPLIT BARREL
HAMMER TYPE:
CHECKED BY: MRH

| DEPTH (ft) | SYMBOL | CLASSIFICATION OF MATERIALS (Description) | BLOWS PER 6 IN (N VALUE) | M.C. (%) | AASHTO GRAVEL (%) | AASHTO SAND (%) | AASHTO FINES (%) | LL (%) | PI (%) |
|---|---|---|---|---|---|---|---|---|---|
| 35 | | 34.0 ft - 36.0 ft, A-4, SaSi, Gray, wet, very dense, SILT, trace fine sand (ML) [Sample 11D]., Rec. = 1.25 ft | 12-30-29-55 (59) | | 0.6 | 3.8 | 95.6 | | |
| 40 | | 39.0 ft - 41.0 ft, A-6, SiCl, Gray, wet, hard, interbedded CLAY and SILT in 1-2" layers, low plasticity (CL-ML) [Sample 12D]., Rec. = 1.5 ft | 14-20-27-31 (47) | | | | | | |
| 45 | | 44.0 ft - 46.0 ft, A-6, Cl, Gray, wet, hard, CLAY, some fine sand, low plasticity, sand in ~1mm layers, (CL) [Sample 13D]., Rec. = 1.42 ft | 10-15-21-23 (36) | | | | | | |
| 50 | | 49.0 ft - 51.0 ft, A-4, ClSi, Gray, wet, hard, clayey SILT, low plasticity (ML) [Sample 14D]., Rec. = 1.75 ft | 15-20-23-27 (43) | | | | | | |
| 55 | | | | | | | | | |

APPROX.
PILE TIP
EL. 1060.0'

LOG OF BORING & WELL CLD BARTON BRIDGE.GPJ VT AOT GDT 8/25/14

STATE OF VERMONT
AGENCY OF TRANSPORTATION
MATERIALS & RESEARCH SECTION
SUBSURFACE INFORMATION

BORING NUMBER: BB-102
SHEET 3 of 3
DATE STARTED: 2/13/13
DATE COMPLETED: 2/14/13

PROJECT NAME: CLD Roaring Brook Bridge
SITE NAME: Barton, VT
STATION: 42+91.5
OFFSET: RT 4.5'
VTSPG: N 816192.00 ft E 1714718.00 ft

PROJECT NUMBER: 123-87464
SITE NUMBER: BRO 1449(31)
GROUND ELEVATION: 1139.0 ft
GROUNDWATER DEPTH: 5.4 ft 2/14/13
PROJECT PIN NUMBER: Barton, VT TH 2 BR 8

BORING CREW:
DRILLER: P. LaBoissier
LOGGER: N. Chinburg
BORING RIG: Mobile B-47 Truck

BORING TYPE: WASH BORE
SAMPLE TYPE: SPLIT BARREL
HAMMER TYPE:
CHECKED BY: MRH

| DEPTH (ft) | SYMBOL | CLASSIFICATION OF MATERIALS (Description) | BLOWS PER 6 IN (N VALUE) | M.C. (%) | AASHTO GRAVEL (%) | AASHTO SAND (%) | AASHTO FINES (%) | LL (%) | PI (%) |
|---|---|---|---|---|---|---|---|---|---|
| | | 61.0 ft, No samples collected 51-79 ft. | | | | | | | |
| 65 | | | | | | | | | |
| 70 | | | | | | | | | |
| 75 | | | | | | | | | |
| 80 | | 79.0 ft, Tri-cone refusal, possible bedrock. Backfilled with cuttings and sealed with cold patch asphalt upon completion. | | | | | | | |
| | | Hole stopped @ 79.0 ft | | | | | | | |
| 85 | | | | | | | | | |

LOG OF BORING & WELL CLD BARTON BRIDGE.GPJ VT AOT GDT 8/25/14

PROJECT NAME: BARTON
PROJECT NUMBER: BRO 1449(31)

FILE NAME: 11j068/cos/z11j068bor.dgn
PROJECT LEADER: J. BYATT
DESIGNED BY: S. BEAUMONT
BORING LOGS (2 OF 4)

PLOT DATE: 12/17/2014
DRAWN BY: M. SMITH
CHECKED BY: J. BYATT
SHEET 24 OF 52

CLD 12-0174 MODEL: BOR03

STATE OF VERMONT
AGENCY OF TRANSPORTATION
MATERIALS & RESEARCH SECTION
SUBSURFACE INFORMATION

BORING NUMBER: BB-103
SHEET 1 of 3
DATE STARTED: 2/12/13
DATE COMPLETED: 2/12/13

PROJECT NAME: CLD Roaring Brook Bridge
SITE NAME: Barton, VT
STATION: 43+58.5
OFFSET: LT 18.0'
VTSPG: N 816253.00 ft E 1714754.00 ft

PROJECT NUMBER: 123-87464
SITE NUMBER: BRO 1449(31)
GROUND ELEVATION: 1139.0 ft
GROUNDWATER DEPTH: 7.6 ft 2/12/13
PROJECT PIN NUMBER: Barton, VT TH 2 BR 8

BORING CREW:
DRILLER: P. LaBoissier
LOGGER: N. Chinburg
BORING RIG: Mobile B-47 Truck

BORING TYPE: WASH BORE
SAMPLE TYPE: SPLIT BARREL
HAMMER TYPE:
CHECKED BY: MRH

| DEPTH (ft) | SYMBOL | CLASSIFICATION OF MATERIALS (Description) | BLOWS PER 6 IN (N VALUE) | M.C. (%) | AASHTO GRAVEL (%) | AASHTO SAND (%) | AASHTO FINES (%) | LL (%) | PI (%) |
|---|---|---|---|---|---|---|---|---|---|
| | | 0.0 ft - 2.0 ft, A-1-B, GrSa, Brown, moist, very dense, fine to coarse SAND and GRAVEL (GW) [Sample 1D]., Rec. = 1.33 ft | 60-58-34-63 (92) | | | | | | |
| 5 | | 4.0 ft - 6.0 ft, A-4, GrSiSa, Brown-gray, wet, loose, silty fine SAND, some medium sand and gravel, trace clay (SM) [Sample 2D]., Rec. = 0.17 ft | 11-4-3-3 (7) | | | | | | |
| 10 | | 9.0 ft - 11.0 ft, A-7-5, Cl, Gray, wet, very stiff, CLAY, trace medium sand, low plasticity (CL) [Sample 3D]., Rec. = 1.25 ft | 6-6-10-8 (16) | 31.0 | | | | 41 | 21 |
| 15 | | 14.0 ft - 16.0 ft, A-7-5, Cl, Gray, wet, stiff, CLAY, trace gravel and medium sand, high plasticity (CH) [Sample 4D]., Rec. = 2.0 ft | 7-7-7-7 (14) | 25.0 | | | | 52 | 31 |
| 20 | | 19.0 ft - 21.0 ft, A-4, GrSiSa, Gray, wet, fine SAND and SILT, trace gravel (SM) [Sample 5D]., Rec. = 1.33 ft | 18-32-49-48 (81) | | 1.7 | 61.5 | 36.8 | | |
| 25 | | 24.0 ft - 25.4 ft, A-4, SiSa, Gray, wet, very dense, silty fine SAND, layers of medium to coarse sand (ML) [Sample 6D]., Rec. = 0.92 ft | 29-57-100/5" (R) | | | | | | |
| | | 25.4 ft - 27.5 ft, Boulder based on drill behavior. | | | | | | | |
| | | 29.0 ft - 33.0 ft, Cored through nested boulders. | | | | | | | |

BOTTOM OF ABUT. 2
EL. 1130.0'

LOG OF BORING & WELL CLD BARTON BRIDGE.GPJ VT AOT.GDT 8/25/14

STATE OF VERMONT
AGENCY OF TRANSPORTATION
MATERIALS & RESEARCH SECTION
SUBSURFACE INFORMATION

BORING NUMBER: BB-103
SHEET 2 of 3
DATE STARTED: 2/12/13
DATE COMPLETED: 2/12/13

PROJECT NAME: CLD Roaring Brook Bridge
SITE NAME: Barton, VT
STATION: 43+58.5
OFFSET: LT 18.0'
VTSPG: N 816253.00 ft E 1714754.00 ft

PROJECT NUMBER: 123-87464
SITE NUMBER: BRO 1449(31)
GROUND ELEVATION: 1139.0 ft
GROUNDWATER DEPTH: 7.6 ft 2/12/13
PROJECT PIN NUMBER: Barton, VT TH 2 BR 8

BORING CREW:
DRILLER: P. LaBoissier
LOGGER: N. Chinburg
BORING RIG: Mobile B-47 Truck

BORING TYPE: WASH BORE
SAMPLE TYPE: SPLIT BARREL
HAMMER TYPE:
CHECKED BY: MRH

| DEPTH (ft) | SYMBOL | CLASSIFICATION OF MATERIALS (Description) | BLOWS PER 6 IN (N VALUE) | M.C. (%) | AASHTO GRAVEL (%) | AASHTO SAND (%) | AASHTO FINES (%) | LL (%) | PI (%) |
|---|---|---|---|---|---|---|---|---|---|
| 35 | | 34.0 ft - 36.0 ft, Wash, otherwise no recovery [Sample 7D]. | | | | | | | |
| 40 | | 39.0 ft - 41.0 ft, A-4, SiCl, Gray, wet, hard, silty CLAY, trace fine sand, low plasticity (CL) [Sample 8D]., Rec. = 2.0 ft | 16-19-20-37 (39) | 25.0 | | | | 24 | 7 |
| 45 | | 44.0 ft - 46.0 ft, A-4, SiCl, Gray, wet, hard, silty CLAY, some fine sand, low plasticity, sand in ~1mm lenses (CL) [Sample 9D]., Rec. = 2.0 ft | 15-21-20-26 (41) | | | | | | |
| 50 | | | | | | | | | |
| 55 | | | | | | | | | |

APPROX.
PILE TIP
EL. 1061.0'

LOG OF BORING & WELL CLD BARTON BRIDGE.GPJ VT AOT.GDT 8/25/14

STATE OF VERMONT
AGENCY OF TRANSPORTATION
MATERIALS & RESEARCH SECTION
SUBSURFACE INFORMATION

BORING NUMBER: BB-103
SHEET 3 of 3
DATE STARTED: 2/12/13
DATE COMPLETED: 2/12/13

PROJECT NAME: CLD Roaring Brook Bridge
SITE NAME: Barton, VT
STATION: 43+58.5
OFFSET: LT 18.0'
VTSPG: N 816253.00 ft E 1714754.00 ft

PROJECT NUMBER: 123-87464
SITE NUMBER: BRO 1449(31)
GROUND ELEVATION: 1139.0 ft
GROUNDWATER DEPTH: 7.6 ft 2/12/13
PROJECT PIN NUMBER: Barton, VT TH 2 BR 8

BORING CREW:
DRILLER: P. LaBoissier
LOGGER: N. Chinburg
BORING RIG: Mobile B-47 Truck

BORING TYPE: WASH BORE
SAMPLE TYPE: SPLIT BARREL
HAMMER TYPE:
CHECKED BY: MRH

| DEPTH (ft) | SYMBOL | CLASSIFICATION OF MATERIALS (Description) | BLOWS PER 6 IN (N VALUE) | M.C. (%) | AASHTO GRAVEL (%) | AASHTO SAND (%) | AASHTO FINES (%) | LL (%) | PI (%) |
|---|---|---|---|---|---|---|---|---|---|
| | | 60.0 ft, No samples collected 46-78 ft. | | | | | | | |
| 65 | | | | | | | | | |
| 70 | | | | | | | | | |
| 75 | | | | | | | | | |
| | | 78.0 ft, Tri-cone refusal, possible bedrock. Backfilled with cuttings upon completion. | | | | | | | |
| 80 | | Hole stopped @ 78.0 ft | | | | | | | |
| 85 | | | | | | | | | |

LOG OF BORING & WELL CLD BARTON BRIDGE.GPJ VT AOT.GDT 8/25/14

CLD 12-0174 MODEL: BOR04

PROJECT NAME: BARTON
PROJECT NUMBER: BRO 1449(31)

FILE NAME: 11j068/cos/z11j068bor.dgn
PROJECT LEADER: J. BYATT
DESIGNED BY: S. BEAUMONT
BORING LOGS (3 OF 4)

PLOT DATE: 12/17/2014
DRAWN BY: M. SMITH
CHECKED BY: J. BYATT
SHEET 25 OF 52

STATE OF VERMONT
AGENCY OF TRANSPORTATION
MATERIALS & RESEARCH SECTION
SUBSURFACE INFORMATION

BORING NUMBER: BB-104
SHEET 1 of 2
DATE STARTED: 2/13/13
DATE COMPLETED: 2/13/13

PROJECT NAME: CLD Roaring Brook Bridge
SITE NAME: Barton, VT
STATION: 43+63.0
OFFSET: RT 2.5'
VTSPG: N 816240.00 ft E 1714771.00 ft

PROJECT NUMBER: 123-87464
SITE NUMBER: BRO 1449(31)
GROUND ELEVATION: 1139.0 ft
GROUNDWATER DEPTH: NM
PROJECT PIN NUMBER: Barton, VT TH 2 BR 8

BORING CREW:
DRILLER: P. LaBoissier
LOGGER: N. Chinburg
BORING RIG: Mobile B-47 Truck

BORING TYPE: WASH BORE
SAMPLE TYPE: SPLIT BARREL
HAMMER TYPE:
CHECKED BY: MRH

| DEPTH (ft) | SYMBOL | CLASSIFICATION OF MATERIALS (Description) | BLOWS PER 6 IN (N VALUE) | M.C. (%) | AASHTO GRAVEL (%) | AASHTO SAND (%) | AASHTO FINES (%) | LL (%) | PI (%) |
|---|---|---|---|---|---|---|---|---|---|
| | | 0.0 ft - 0.5 ft, Asphalt. | | | | | | | |
| | | 1.0 ft - 1.5 ft, A-1-B, GrSa, Brown, moist, very dense, fine to coarse SAND and GRAVEL (GW) [Sample 1D]., Rec. = 0.5 ft | 120 (R) | | | | | | |
| 5 | | 3.0 ft - 5.0 ft, A-4, GrSaSi, Brown-gray, wet, very dense, fine SAND and SILT ,some clay, some coarse sand and fine gravel, clay in ~1-2" layer near bottom of spoon (ML) [Sample 2D]., Rec. = 1.17 ft | 50-42-22-7 (64) | | 0.9 | 42.2 | 56.9 | | |
| | | 5.0 ft - 6.3 ft, A-4, GrSaSi, Brown-gray, wet, compact, fine SAND, some silt, trace gravel, trace organics (wood) (SM) [Sample 3D]., Rec. = 0.92 ft | 9-10-100/3" (R) | | | | | | |
| | | 6.3 ft - 7.0 ft, Cobble based on drill behavior. | | | | | | | |
| 10 | | 9.0 ft - 9.4 ft, A-4, SaSi, Brown, wet, compact, fine SAND and SILT, trace gravel (SM) [Sample 4D - Top 5"]., Rec. = 1.5 ft | 7-10-17-22 (27) | | | | | | |
| | | 9.4 ft - 11.0 ft, A-7-5, SiCl, Gray, wet, very stiff, CLAY, some silt, low plasticity (CL) [Sample 4D - Bottom 13"]. | | | | | | | |
| 15 | | 14.0 ft - 16.0 ft, A-7-5, SiCl, Gray, wet, very stiff, silty CLAY, ~1mm lenses of fine sand, low plasticity (CL) [Sample 5D]., Rec. = 1.67 ft | 9-8-9-11 (17) | 31.0 | | | | 50 | 28 |
| 20 | | 19.0 ft - 20.0 ft, Boulder based on drill behavior., Rec. = 0.0 ft | 50/0" (R) | | | | | | |
| 25 | | 24.0 ft - 25.5 ft, Broken rock in spoon tip, no recovery, possibly pushing cobble [Sample 6D]., Rec. = 0.08 ft | 49-37-63-40/2" (R) | | | | | | |
| | | 25.5 ft - 28.5 ft, Cored through nested boulders. | | | | | | | |
| | | 29.0 ft - 29.4 ft, A-4, SiSa, Brown-gray, wet, very dense, fine SAND and SILT (ML) [Sample 7D]. Low recovery. | 100/5" (R) | | | | | | |

BOTTOM OF ABUT. 2
EL. 1130.0'

LOG OF BORING & WELL CLD BARTON BRIDGE.GPJ VT AOT.GDT 8/25/14

STATE OF VERMONT
AGENCY OF TRANSPORTATION
MATERIALS & RESEARCH SECTION
SUBSURFACE INFORMATION

BORING NUMBER: BB-104
SHEET 2 of 2
DATE STARTED: 2/13/13
DATE COMPLETED: 2/13/13

PROJECT NAME: CLD Roaring Brook Bridge
SITE NAME: Barton, VT
STATION: 43+63.0
OFFSET: RT 2.5'
VTSPG: N 816240.00 ft E 1714771.00 ft

PROJECT NUMBER: 123-87464
SITE NUMBER: BRO 1449(31)
GROUND ELEVATION: 1139.0 ft
GROUNDWATER DEPTH: NM
PROJECT PIN NUMBER: Barton, VT TH 2 BR 8

BORING CREW:
DRILLER: P. LaBoissier
LOGGER: N. Chinburg
BORING RIG: Mobile B-47 Truck

BORING TYPE: WASH BORE
SAMPLE TYPE: SPLIT BARREL
HAMMER TYPE:
CHECKED BY: MRH

| DEPTH (ft) | SYMBOL | CLASSIFICATION OF MATERIALS (Description) | BLOWS PER 6 IN (N VALUE) | M.C. (%) | AASHTO GRAVEL (%) | AASHTO SAND (%) | AASHTO FINES (%) | LL (%) | PI (%) |
|---|---|---|---|---|---|---|---|---|---|
| | | broken rock pieces in spoon tip., Rec. = 0.25 ft | | | | | | | |
| | | 29.4 ft - 32.0 ft, Boulder based on drill behavior. Hole collapsed to 28 ft. | | | | | | | |
| 35 | | 34.0 ft - 36.0 ft, A-6, SiCl, Gray, wet, hard, CLAY, some fine sand, trace coarse gravel, low plasticity, sand in ~1mm layers (CL) [Sample 8D]., Rec. = 0.67 ft | 19-15-20-62 (35) | 21.0 | | | | 36 | 17 |
| | | 37.0 ft - 38.0 ft, Boulder based on drill behavior. | | | | | | | |
| 40 | | 39.0 ft - 41.0 ft, A-6, SiSa, Gray, wet, fine SAND, some silt (ML) [Sample 9D]., Rec. = 0.67 ft | 33-53-64-75/1" (R) | | | | | | |
| | | 41.0 ft, Completed hole at 41 ft -bgs in soil. Backfilled with cuttings and sealed with cold patch asphalt upon completion. | | | | | | | |
| | | Hole stopped @ 41.0 ft | | | | | | | |
| 45 | | | | | | | | | |
| 50 | | | | | | | | | |
| 55 | | | | | | | | | |

LOG OF BORING & WELL CLD BARTON BRIDGE.GPJ VT AOT.GDT 8/25/14

CLD 12-0174 MODEL: BOR05

CONSULTING ENGINEERS

PROJECT NAME: BARTON
PROJECT NUMBER: BRO 1449(31)

FILE NAME: 11j068/cos/z11j068bor.dgn
PROJECT LEADER: J. BYATT
DESIGNED BY: S. BEAUMONT
BORING LOGS (4 OF 4)

PLOT DATE: 12/17/2014
DRAWN BY: M. SMITH
CHECKED BY: J. BYATT
SHEET 26 OF 52

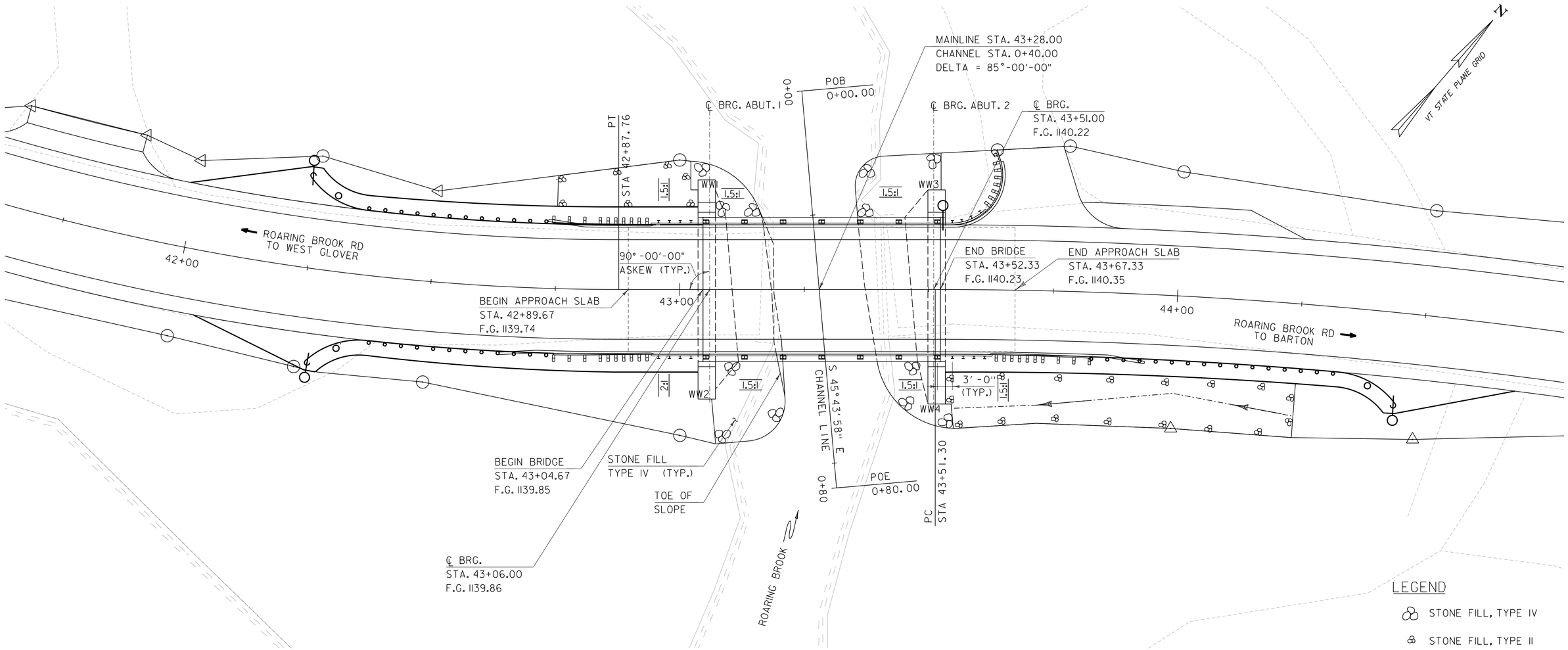


## PLAN VIEW

SCALE: 1" = 10'-0"

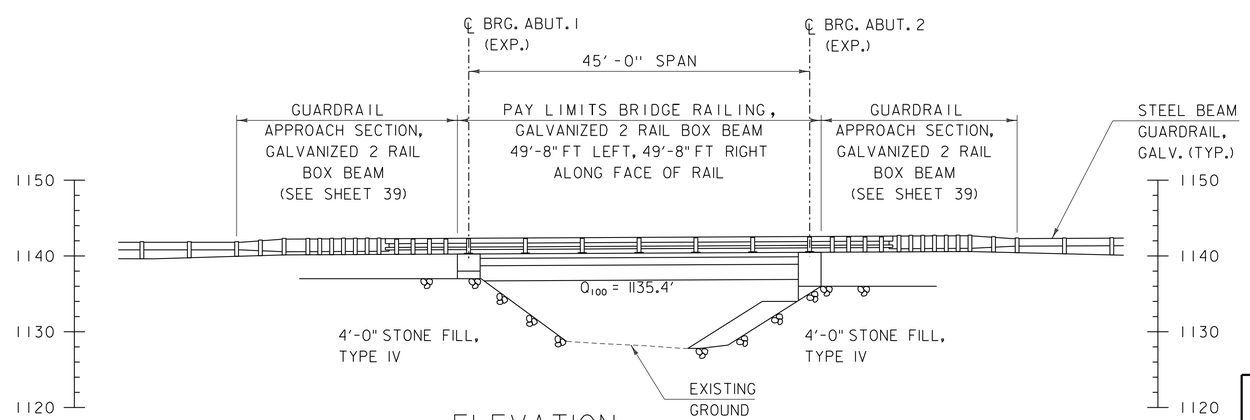


## ELEVATION

SCALE: 1" = 10'-0"

0 10 20
(SCALE 1" = 10')

CONSULTING ENGINEERS
540 Commercial Street, Manchester, NH 03101
(603) 668-8223 • Fax: (603) 668-8802
cld@cldengineers.com • www.cldengineers.com
Maine • New Hampshire • Vermont

PROJECT NAME: BARTON
PROJECT NUMBER: BRO 1449(31)

FILE NAME: 11j068/cos/z11j068pe.dgn
PROJECT LEADER: J. BYATT
DESIGNED BY: S. BEAUMONT
PLAN AND ELEVATION

PLOT DATE: 12/17/2014
DRAWN BY: M. SMITH
CHECKED BY: J. BYATT
SHEET 27 OF 52

CLD 12-0174 MODEL: PE01

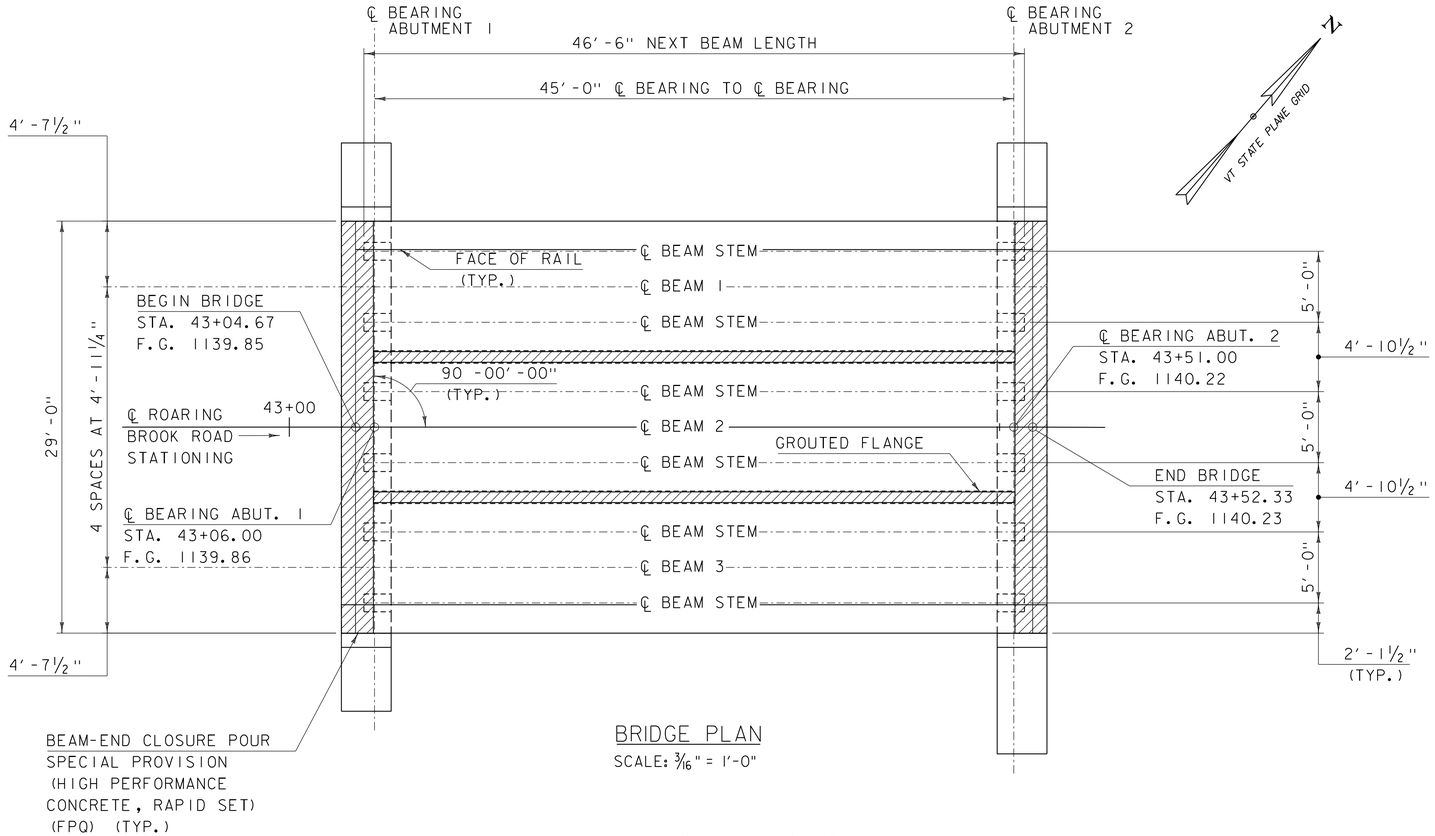


BRIDGE PLAN

SCALE: 3/16" = 1'-0"

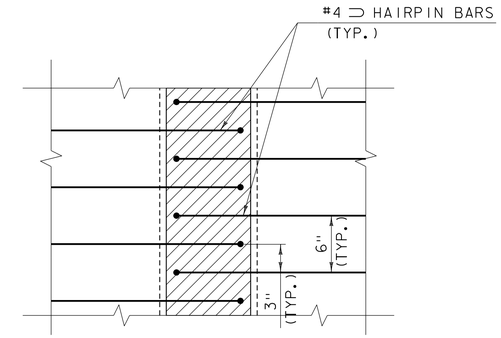


CONNECTION DETAIL PLAN

SCALE: 1½" = 1'-0"

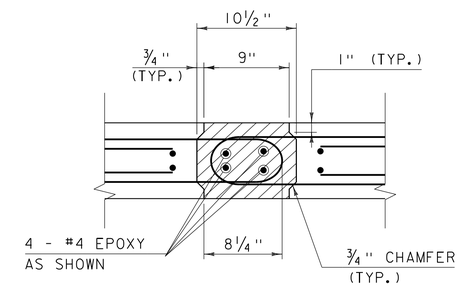


CONNECTION DETAIL SECTION

SCALE: 1½" = 1'-0"

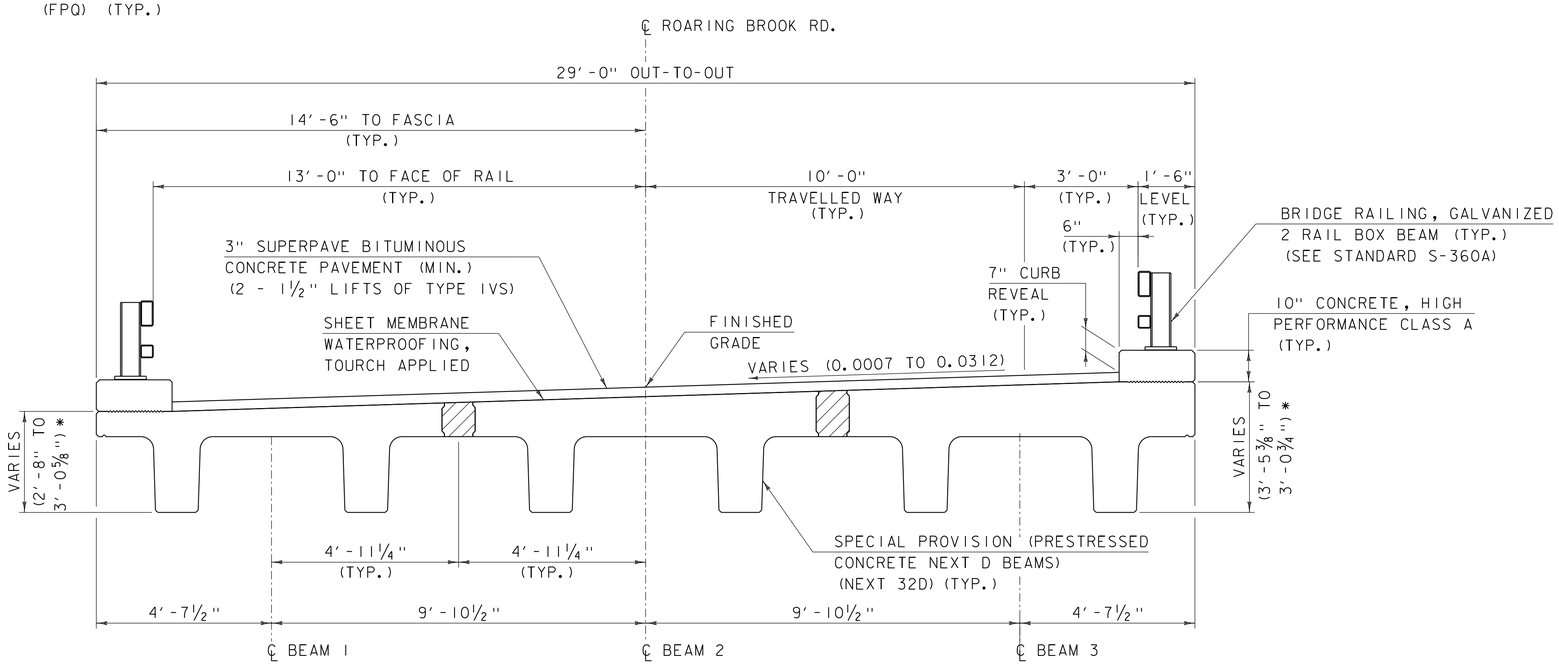


TYPICAL BRIDGE SECTION

SCALE: ½" = 1'-0"

* DIMENSIONS TAKEN AT BEGIN AND END BEAM FLANGE AT ABUTMENT 1 AND 2, RESPECTIVELY.

SPECIAL PROVISION (HIGH PERFORMANCE CONCRETE, RAPID SET) (FPQ)

| | |
|---|---|
| PROJECT NAME: BARTON | |
| PROJECT NUMBER: BRO 1449(31) | |
| FILE NAME: z11j068sup.dgn | PLOT DATE: 12/17/2014 |
| PROJECT LEADER: J. BYATT | DRAWN BY: M. SMITH |
| DESIGNED BY: S. BEAUMONT | CHECKED BY: J. BYATT |
| BRIDGE PLAN AND TYPICAL SECTIONS | SHEET 28 OF 52 |

CLD 12-0174 MODEL: SUP02

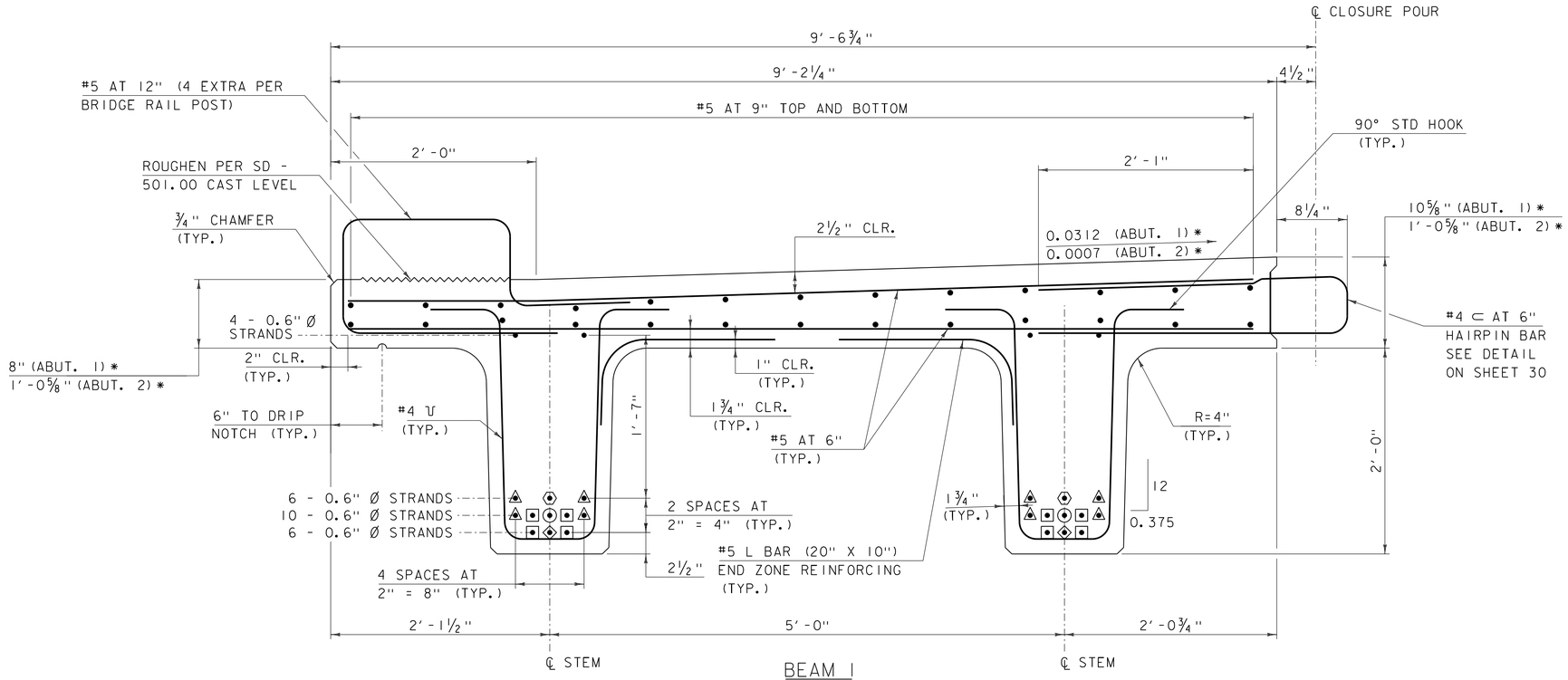


BEAM 1

SCALE: 1½" = 1'-0"

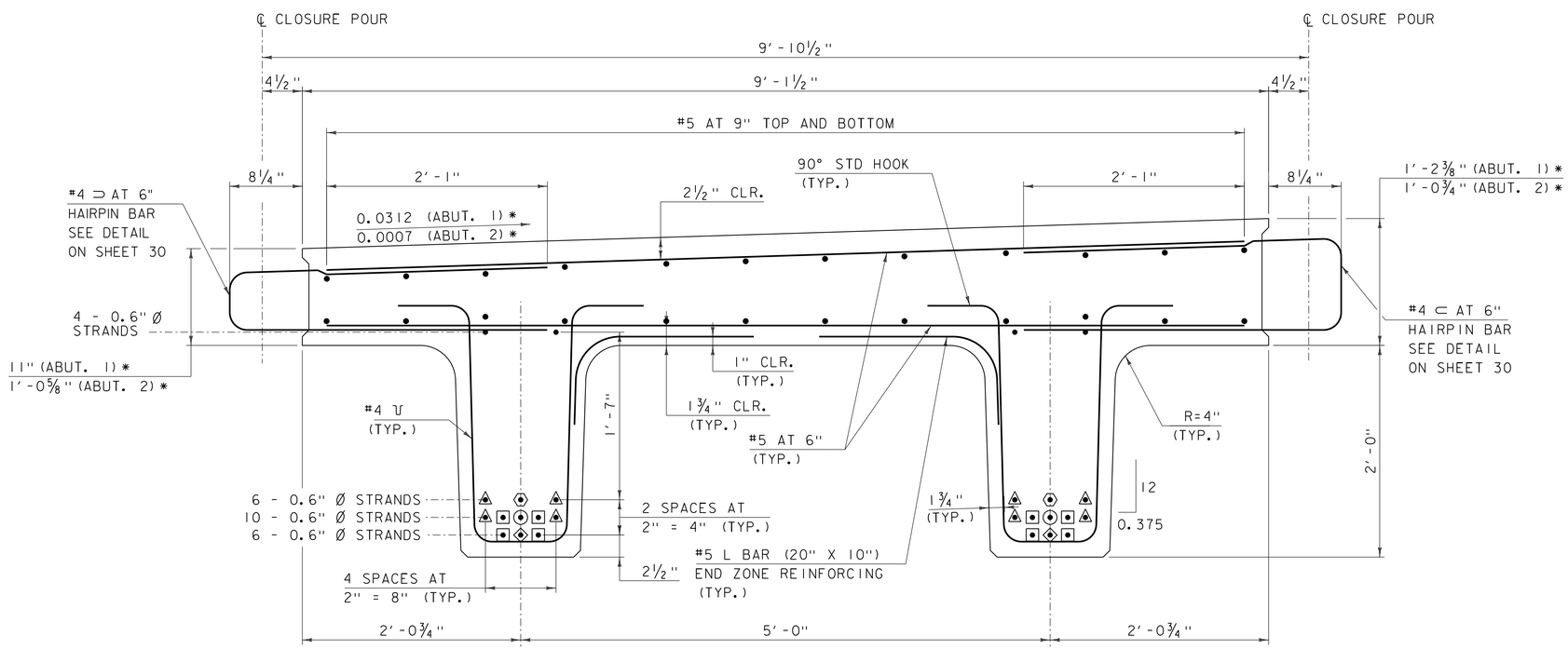


BEAM 2

SCALE: 1½" = 1'-0"

* DIMENSIONS TAKEN AT BEGIN AND END BEAM FLANGE AT ABUTMENT 1 AND 2, RESPECTIVELY. TRANSITION SLOPES AND DIMENSIONS BETWEEN THE TWO LOCATIONS.

◇ DENOTES STRAND DEBONDED 8'-0" FROM EACH END OF BEAM

○ DENOTES STRAND DEBONDED 4'-0" FROM EACH END OF BEAM

⬡ DENOTES STRAND DEBONDED 2'-0" FROM EACH END OF BEAM

△ DENOTES STRAND DEBONDED 6" FROM EACH END OF BEAM

□ DENOTES FULLY BONDED STRAND EXTENDED 2'-0" FROM BEAM END

| | |
|---|---|
| PROJECT NAME: BARTON | |
| PROJECT NUMBER: BRO 1449(31) | |
| FILE NAME: z11j068sup.dgn | PLOT DATE: 12/17/2014 |
| PROJECT LEADER: J. BYATT | DRAWN BY: M. SMITH |
| DESIGNED BY: S. BEAUMONT | CHECKED BY: J. BYATT |
| NEXT BEAM DETAILS (1 OF 3) | SHEET 29 OF 52 |

CONSULTING ENGINEERS

CLD 12-0174 MODEL: SUP03

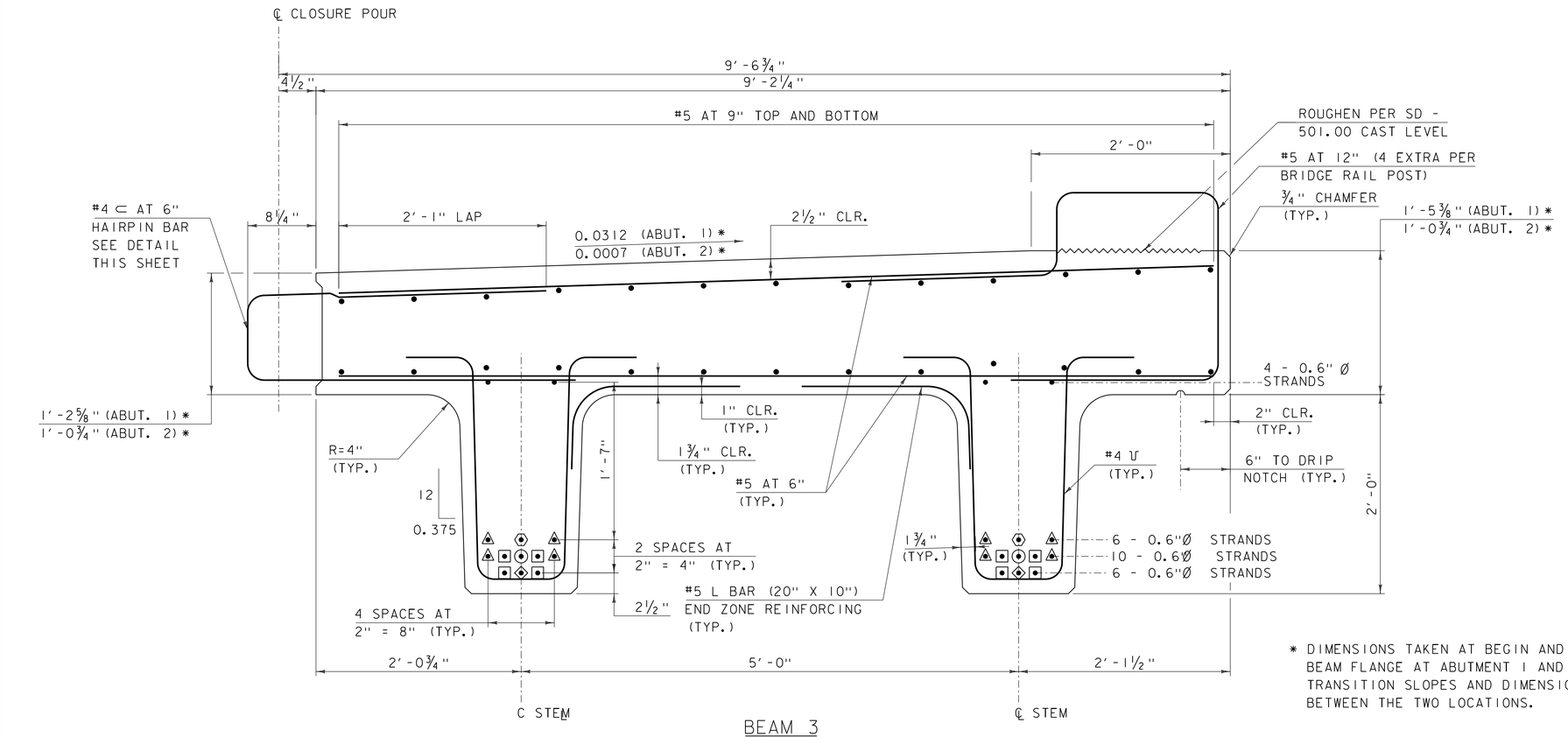


BEAM 3

SCALE: 1½" = 1'-0"

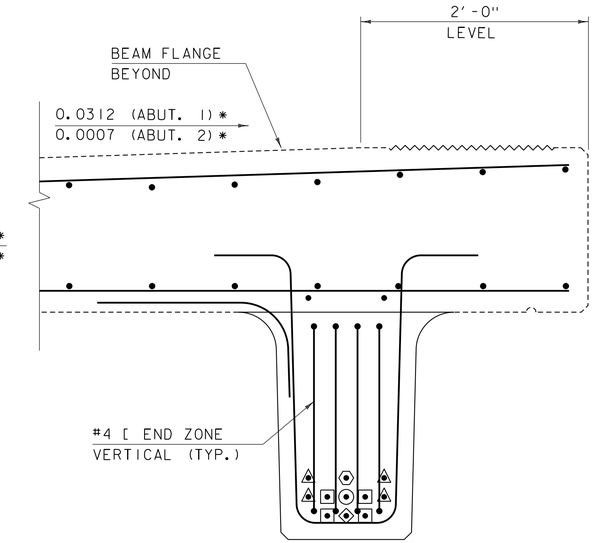


END SECTION DETAIL

SCALE: 1½" = 1'-0"

* DIMENSIONS TAKEN AT BEGIN AND END BEAM FLANGE AT ABUTMENT 1 AND 2. TRANSITION SLOPES AND DIMENSIONS BETWEEN THE TWO LOCATIONS.

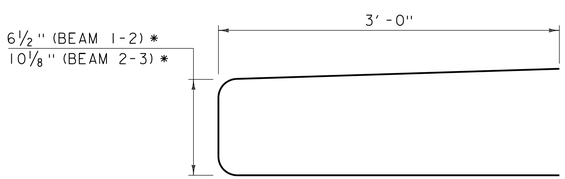


HAIRPIN BAR DETAIL AT ABUTMENT 1

SCALE: 1½" = 1'-0"

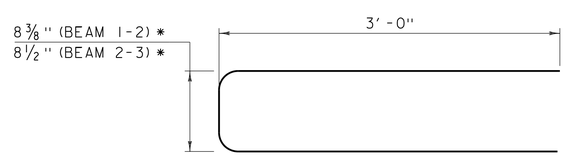


HAIRPIN BAR DETAIL AT ABUTMENT 2

SCALE: 1½" = 1'-0"

◇ DENOTES STRAND DEBONDED 8'-0" FROM EACH END OF BEAM

○ DENOTES STRAND DEBONDED 4'-0" FROM EACH END OF BEAM

⬡ DENOTES STRAND DEBONDED 2'-0" FROM EACH END OF BEAM

△ DENOTES STRAND DEBONDED 6" FROM EACH END OF BEAM

□ DENOTES FULLY BONDED STRAND EXTENDED 2'-0" FROM BEAM END

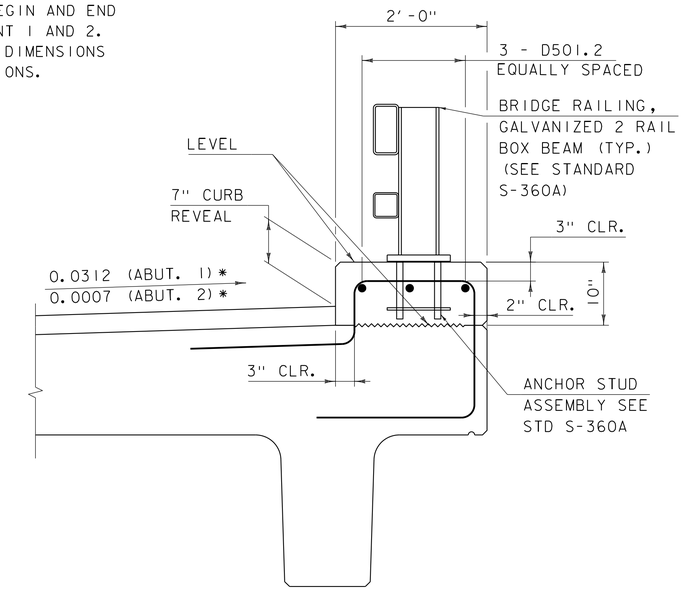


CURB SECTION

SCALE: 1" = 1'-0"

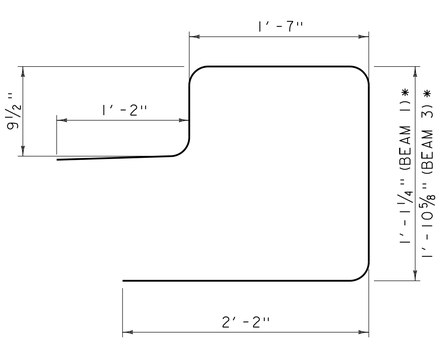


CURB BAR DETAIL AT ABUTMENT 1

SCALE: 1½" = 1'-0"

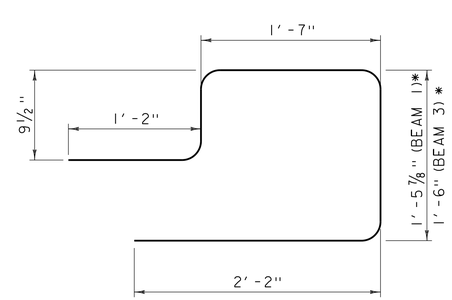


CURB BAR DETAIL AT ABUTMENT 2

SCALE: 1½" = 1'-0"

* HAIRPIN AND CURB BAR DIMENSIONS ARE TAKEN AT BEGIN AND END BEAM FLANGE AT ABUTMENT 1 AND 2, RESPECTIVELY. TRANSITION SLOPES AND DIMENSIONS BETWEEN THE TWO LOCATIONS.

CONSULTING ENGINEERS

| | |
|---|---|
| PROJECT NAME: BARTON | |
| PROJECT NUMBER: BRO 1449(31) | |
| FILE NAME: z11j068sup.dgn | PLOT DATE: 12/17/2014 |
| PROJECT LEADER: J. BYATT | DRAWN BY: M. SMITH |
| DESIGNED BY: S. BEAUMONT | CHECKED BY: J. BYATT |
| NEXT BEAM DETAILS (2 OF 3) | SHEET 30 OF 52 |

CLD 12-0174 MODEL: SUP04

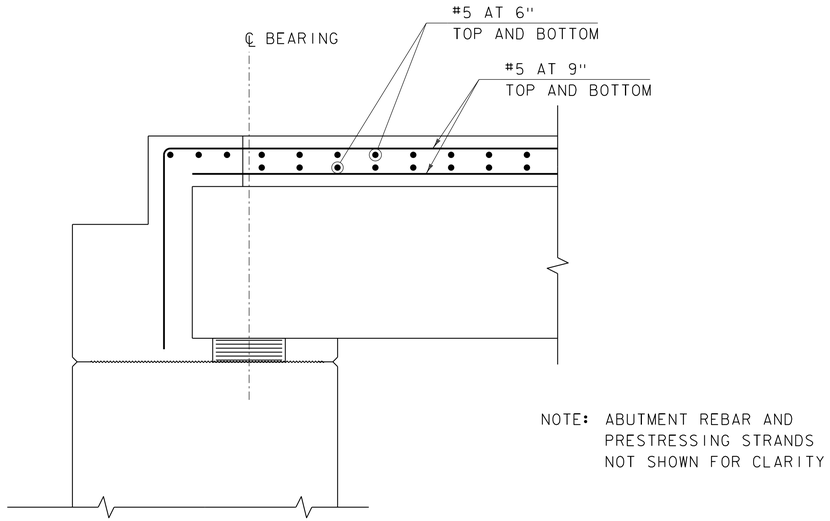


TYPICAL DECK REINFORCING AT BEAM END

SCALE: 1" = 1'-0"

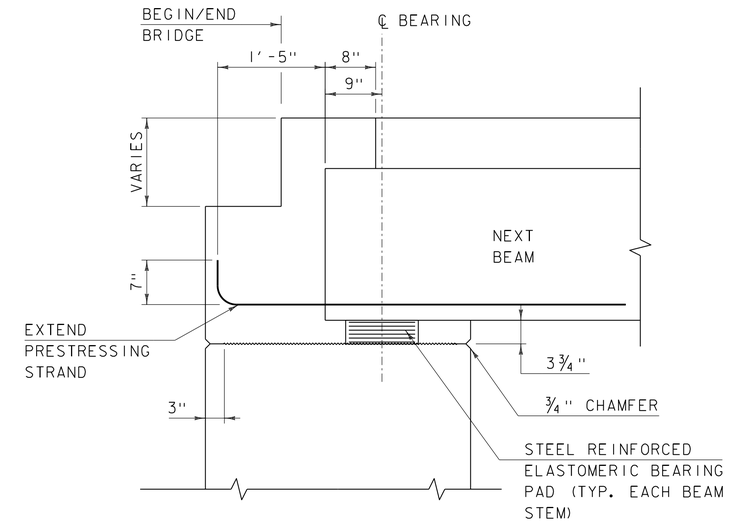


TYPICAL BEAM END DETAIL

SCALE: 1" = 1'-0"

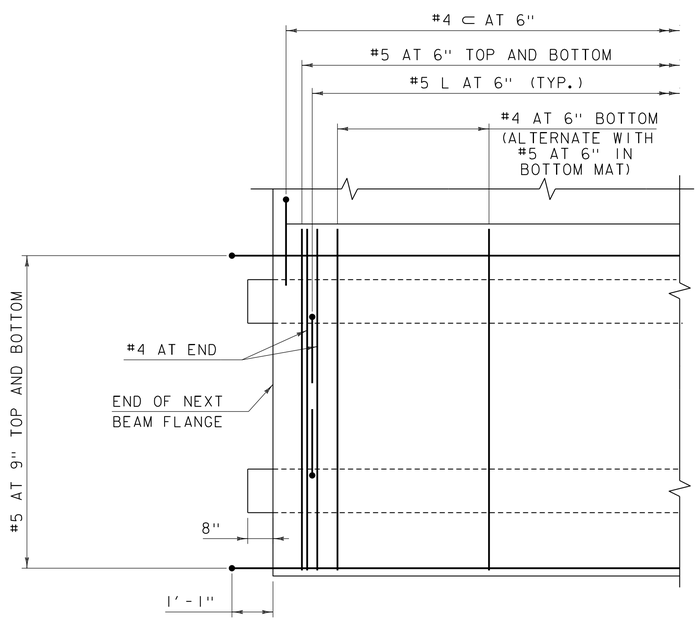


PARTIAL BEAM FLANGE PLAN

SCALE: 1/2" = 1'-0"

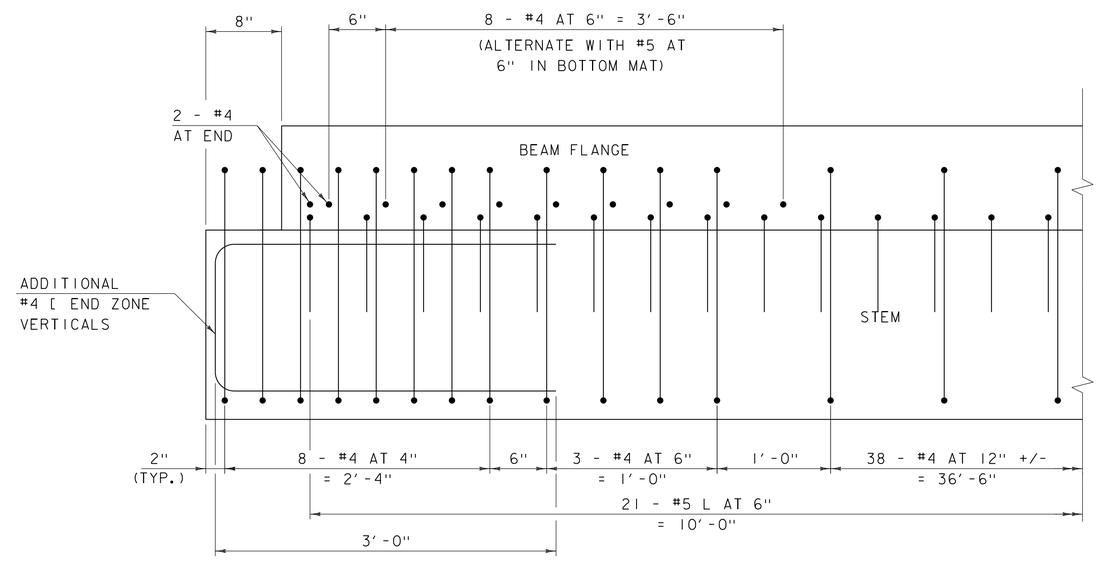


LONGITUDINAL SECTION

SCALE: 1 1/2" = 1'-0"

| | |
|---|---|
| PROJECT NAME: BARTON | |
| PROJECT NUMBER: BRO 1449(31) | |
| FILE NAME: z11j068sup.dgn | PLOT DATE: 12/17/2014 |
| PROJECT LEADER: J. BYATT | DRAWN BY: M. SMITH |
| DESIGNED BY: N. CARON | CHECKED BY: J. BYATT |
| NEXT BEAM DETAILS (3 OF 3) | SHEET 31 OF 52 |

CONSULTING ENGINEERS

CLD 12-0174 MODEL: SUP05

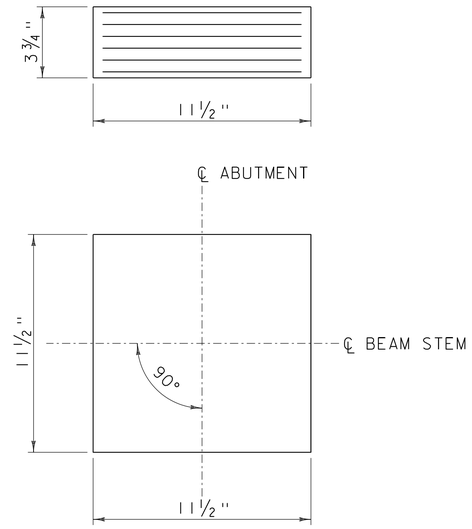


ELASTOMERIC BEARING DETAIL

SCALE: 3" = 1'-0"

2 - ¼" EXTERIOR LAYERS OF ELASTOMER
5 - ½" INTERIOR LAYERS OF ELASTOMER
6 - ⅛" STEEL REINFORCING PLATES

## BEARING NOTES

1. BEARINGS SHALL CONFORM TO THE APPLICABLE SUBSECTIONS OF SECTIONS 531 AND 731 AND WILL BE PAID FOR UNDER CONTRACT ITEM 531.17.

2. ALL REINFORCEMENT BETWEEN LAYERS OF ELASTOMER SHALL BE STEEL MEETING THE REQUIREMENTS OF SUBSECTION 714.02. ALL INTERNAL STEEL PLATES SHALL BE SAND BLASTED AND FREE OF COATINGS, RUST AND MILL SCALE. THE PLATES SHALL BE FREE OF SHARP EDGES AND BURRS.

3. STEEL REINFORCED ELASTOMERIC BEARINGS SHALL HAVE A MINIMUM ¼" EDGE SEAL OF ELASTOMER INTEGRAL WITH BEARING OVER ALL INTERNAL PLATES.

4. THE ELASTOMER WAS DESIGNED WITH A SHEAR MODULUS RANGE OF 130 PSI - 200 PSI.

5. THE ELASTOMER SHALL MEET THE REQUIREMENTS OF LOW TEMPERATURE ZONE D AND HAVE A HARDNESS OF 60 ON THE SHORE A SCALE.

6. THE CONTRACTOR IS ADVISED TO HAVE A MINIMUM OF 16 - ¼" x 12½" x 12½" GALVANIZED STEEL SHIMS AVAILABLE FOR ELEVATION ADJUSTMENTS UPON THE SETTING OF THE SUPERSTRUCTURE UNITS. THE SHIMS SHALL BE FABRICATED ACCORDING TO SECTION 531 AND SHALL BE INCLUDED IN THE UNIT BID PRICE FOR CONTRACT ITEM 531.17.

7. DESIGN SERVICE LOADS PER BEARING: (DESIGN METHOD A)
   MAX DEAD LOAD: 32.2 K
   MAX LIVE LOAD: 31.7 K

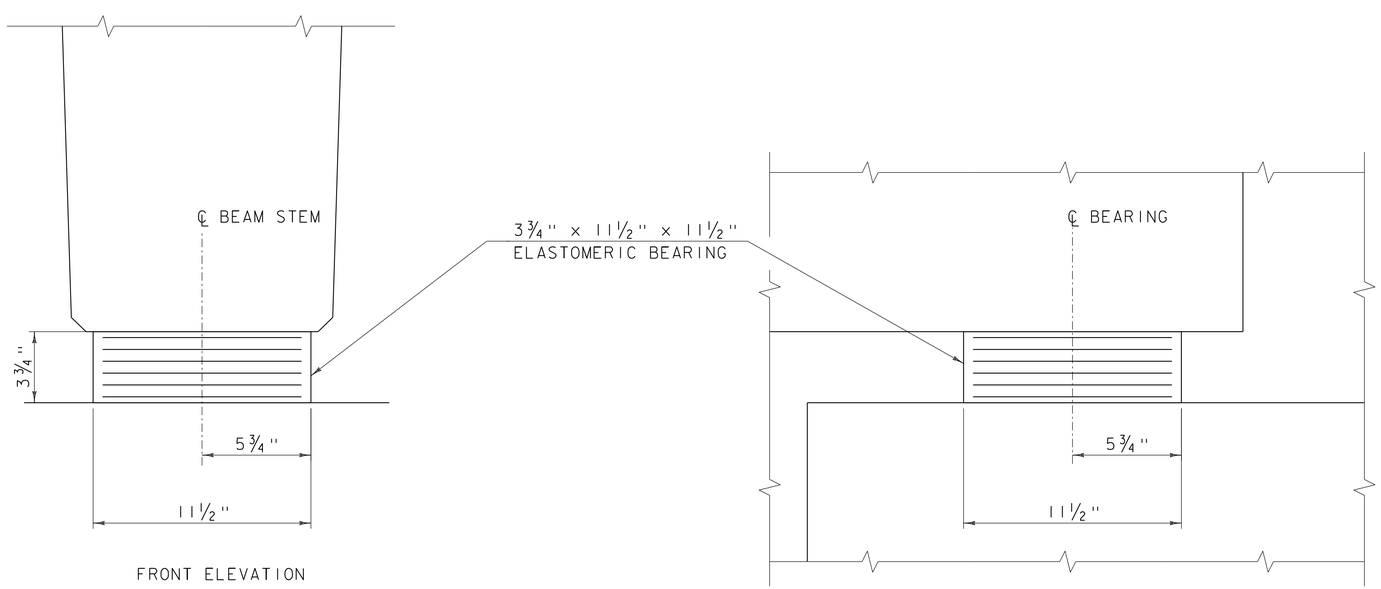


FRONT ELEVATION

SIDE ELEVATION

ELASTOMERIC BEARING DETAIL

SCALE: 3" = 1'-0"

| | |
|---|---|
| PROJECT NAME: BARTON | |
| PROJECT NUMBER: BRO 1449(31) | |
| FILE NAME: z11j068sup.dgn | PLOT DATE: 12/17/2014 |
| PROJECT LEADER: J. BYATT | DRAWN BY: M. SMITH |
| DESIGNED BY: S. BEAUMONT | CHECKED BY: J. BYATT |
| BEARING DETAILS | SHEET 32 OF 52 |

CLD 12-0174 MODEL: SUP06

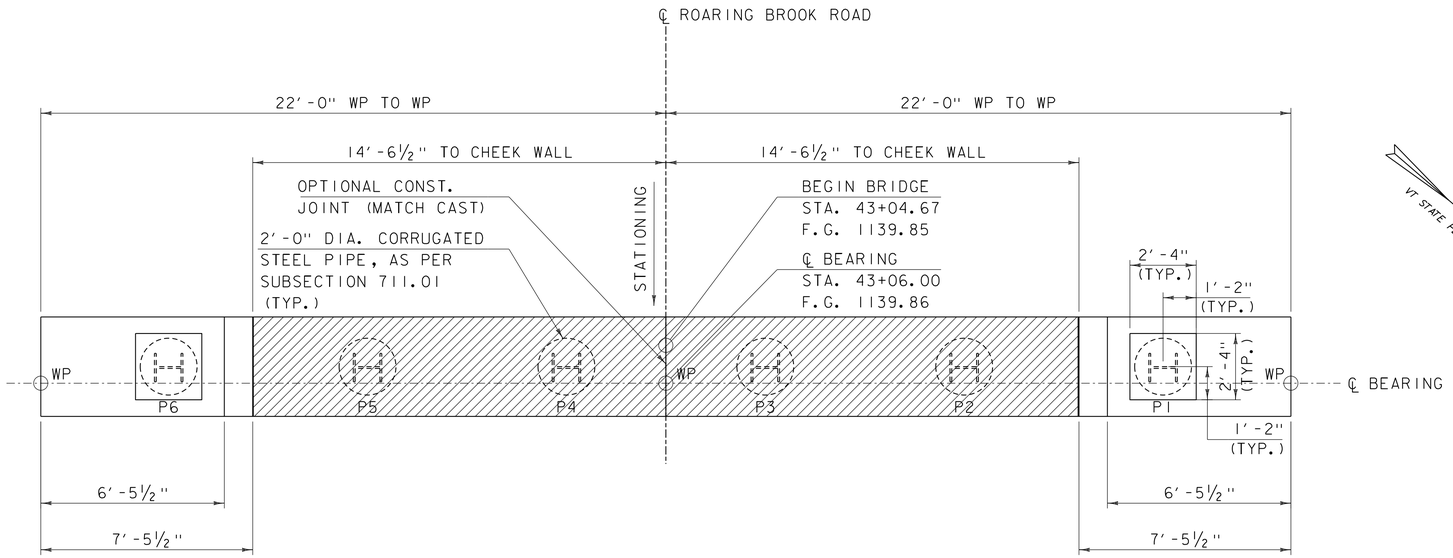


ABUTMENT 1 PLAN (PCU 1)

SCALE: ⅜" = 1'-0"

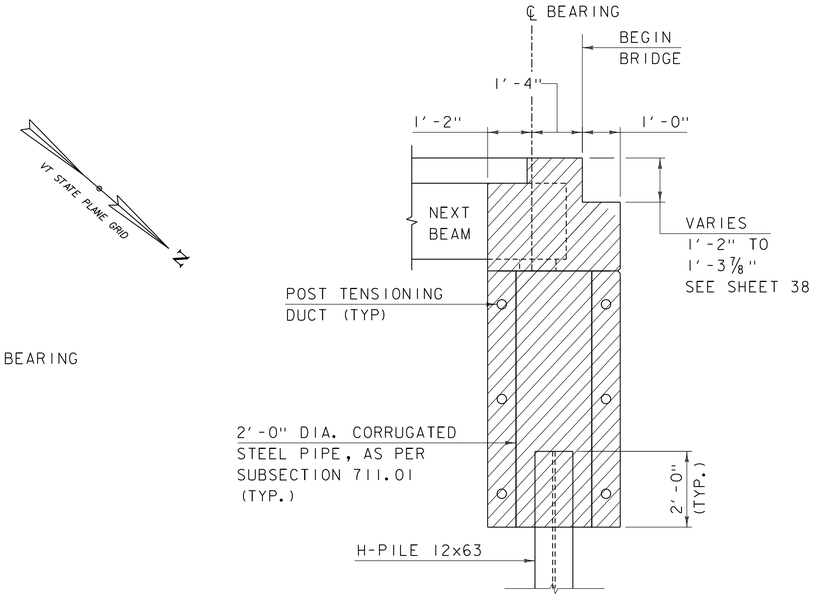


ABUTMENT 1 TYPICAL

SCALE: ½" = 1'-0"

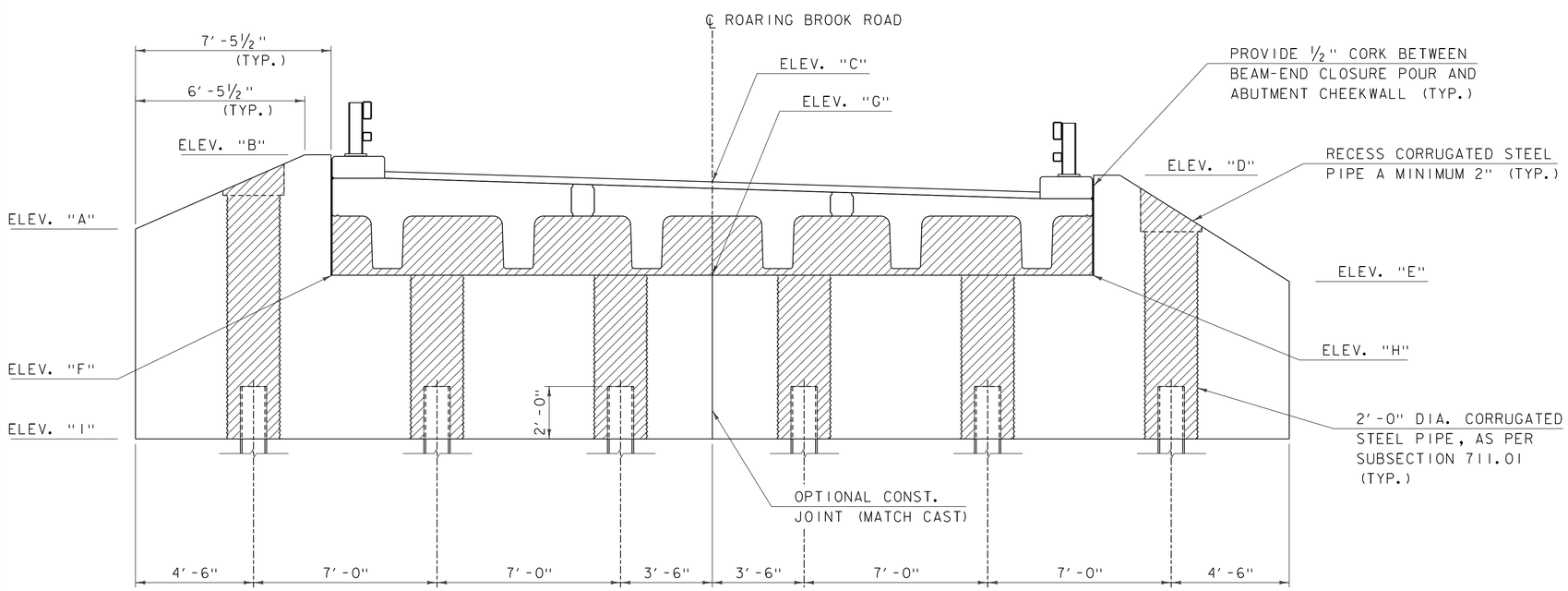


ABUTMENT 1 ELEVATION (PCU 1)

SCALE: ⅜" = 1'-0"

## PCU ELEVATIONS

| | AB1 |
|---|---|
| ELEV "A" | 1138.00 |
| ELEV "B" | 1140.83 |
| ELEV "C" | 1139.86 |
| ELEV "D" | 1140.05 |
| ELEV "E" | 1136.00 |
| ELEV "F" | 1136.24 |
| ELEV "G" | 1136.24 |
| ELEV "H" | 1136.24 |
| ELEV "I" | 1130.00 |

NOTE: ELEVATIONS ARE AT CENTERLINE BEARING

SPECIAL PROVISION (HIGH PERFORMANCE CONCRETE, RAPID SET) (FPQ)

PROJECT NAME: BARTON
PROJECT NUMBER: BRO 1449(31)

FILE NAME: z11j068abut1.dgn
PROJECT LEADER: J. BYATT
DESIGNED BY: S. BEAUMONT
ABUTMENT 1 PLAN

PLOT DATE: 12/17/2014
DRAWN BY: M. SMITH
CHECKED BY: J. BYATT
SHEET 33 OF 52

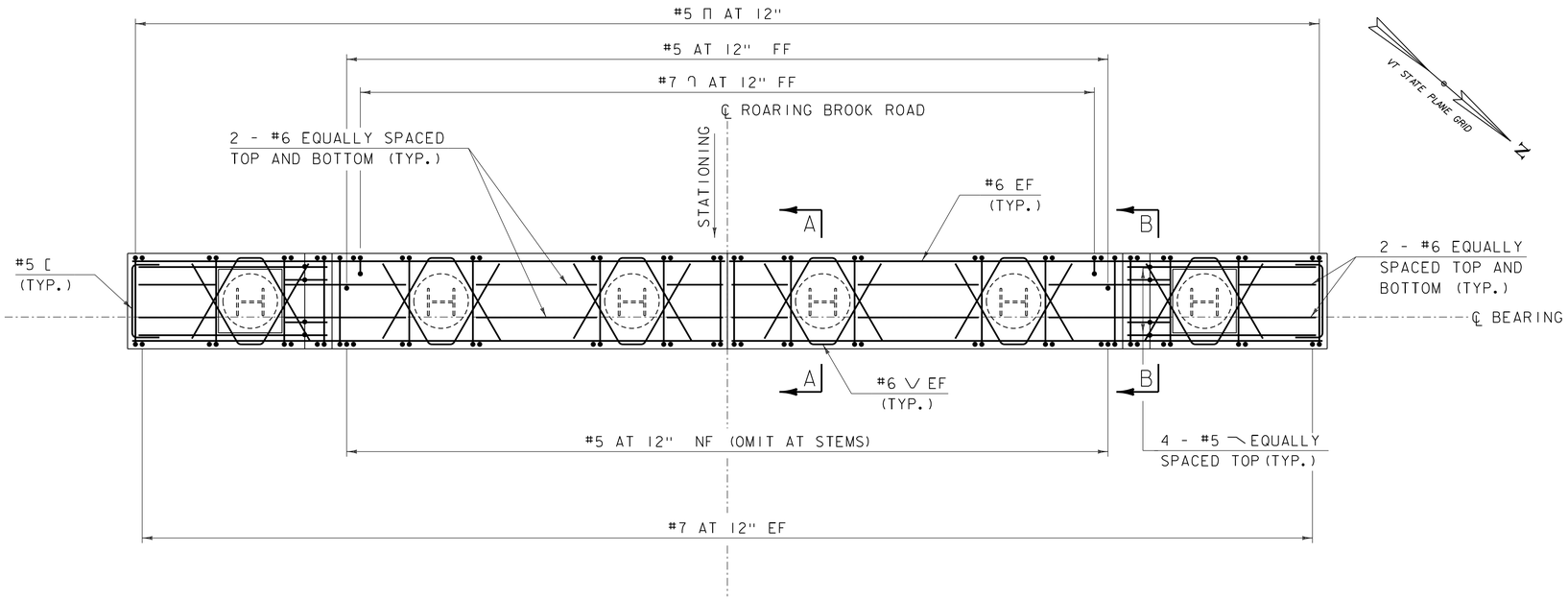


ABUTMENT 1 REINFORCING PLAN (PCU 1)

SCALE: 3/8" = 1'-0"

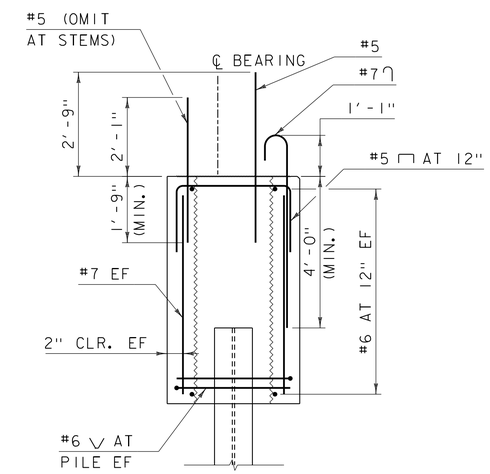


SECTION A-A

SCALE: 1/2" = 1'-0"

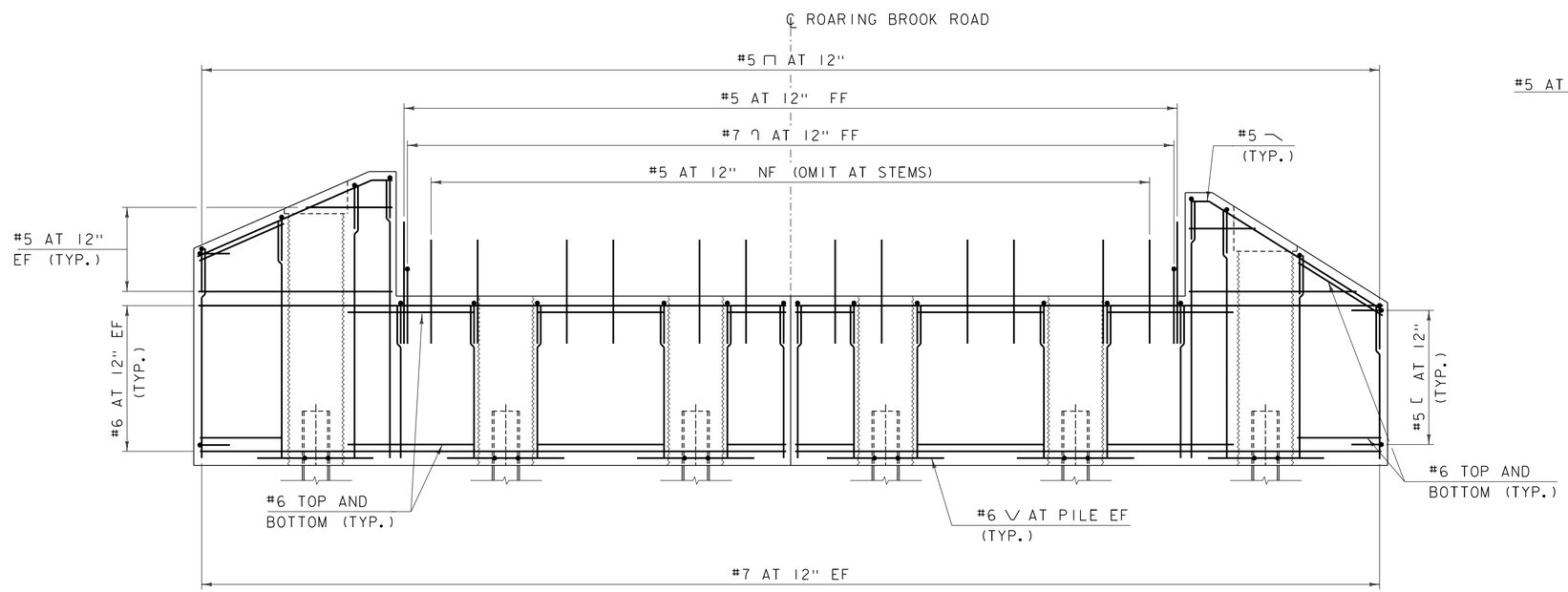


ABUTMENT 1 REINFORCING ELEVATION (PCU 1)

SCALE: 3/8" = 1'-0"

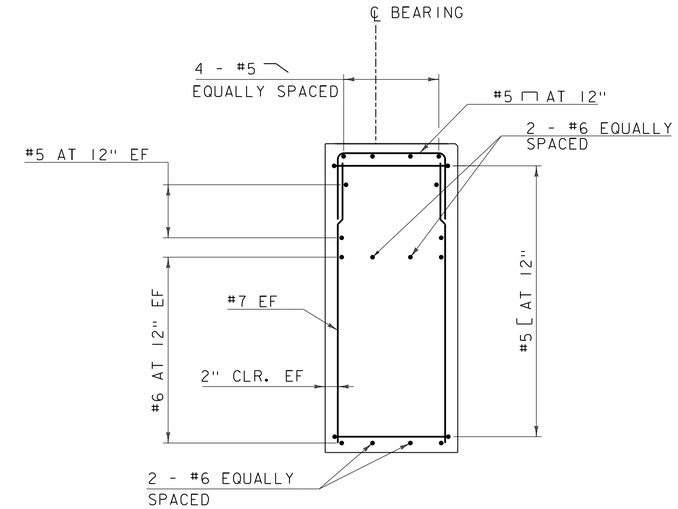


SECTION B-B

SCALE: 1/2" = 1'-0"

| | |
|---|---|
| PROJECT NAME: BARTON | |
| PROJECT NUMBER: BRO 1449(31) | |
| FILE NAME: z11j068abut1.dgn | PLOT DATE: 12/17/2014 |
| PROJECT LEADER: J. BYATT | DRAWN BY: M. SMITH |
| DESIGNED BY: S. BEAUMONT | CHECKED BY: J. BYATT |
| ABUTMENT 1 REINFORCING | SHEET 34 OF 52 |

CONSULTING ENGINEERS

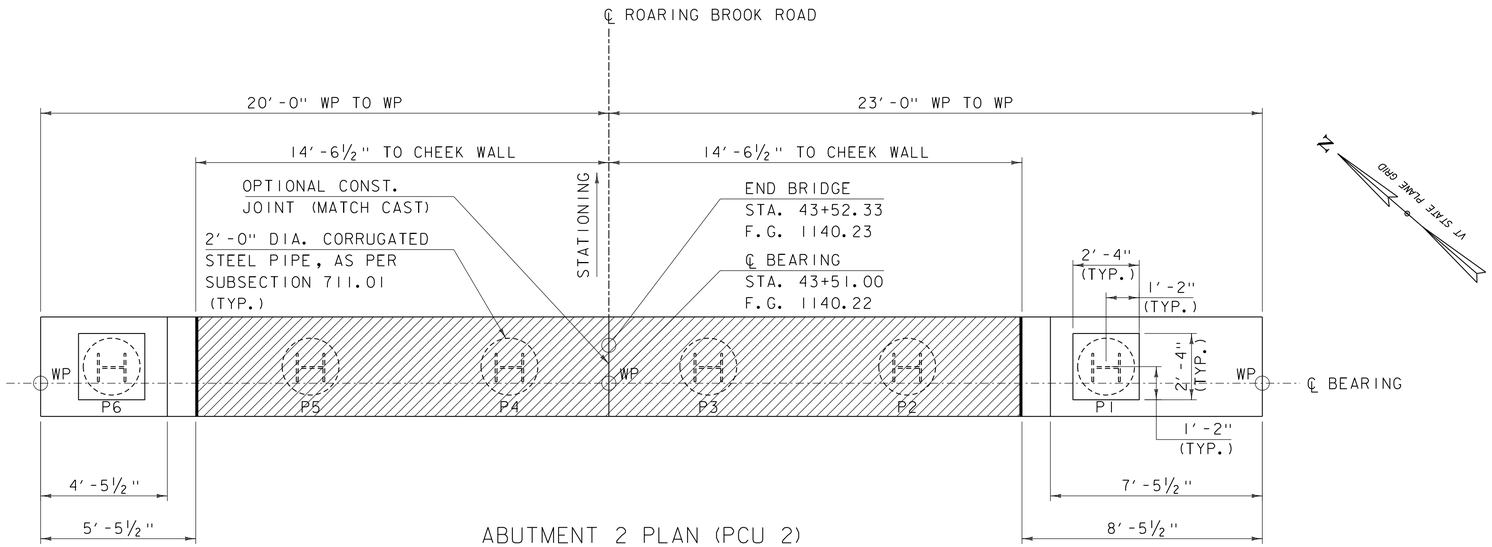


ABUTMENT 2 PLAN (PCU 2)

SCALE: ⅜" = 1'-0"

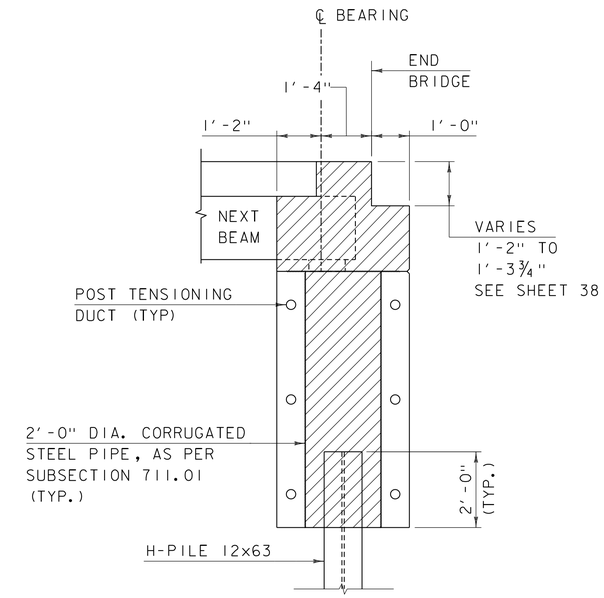


ABUTMENT 2 TYPICAL

SCALE: ½" = 1'-0"

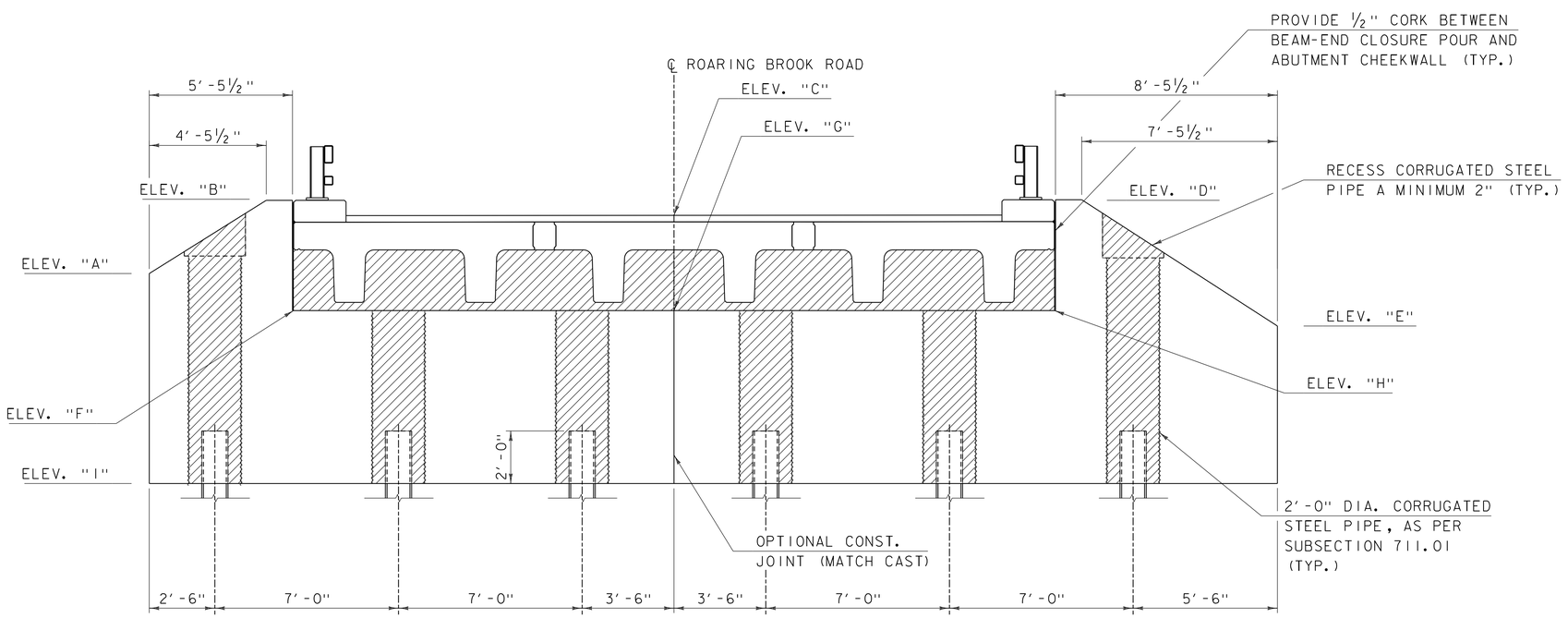


ABUTMENT 2 ELEVATION (PCU 2)

SCALE: ⅜" = 1'-0"

## PCU ELEVATIONS

| | AB2 |
|---|---|
| ELEV "A" | 1138.00 |
| ELEV "B" | 1140.79 |
| ELEV "C" | 1140.22 |
| ELEV "D" | 1140.81 |
| ELEV "E" | 1136.00 |
| ELEV "F" | 1136.59 |
| ELEV "G" | 1136.59 |
| ELEV "H" | 1136.59 |
| ELEV "I" | 1130.00 |

NOTE: ELEVATIONS ARE AT CENTERLINE BEARING

SPECIAL PROVISION (HIGH PERFORMANCE CONCRETE, RAPID SET) (FPQ)

PROJECT NAME: BARTON
PROJECT NUMBER: BRO 1449(31)

FILE NAME: z11j068abut2.dgn
PROJECT LEADER: J. BYATT
DESIGNED BY: S. BEAUMONT
ABUTMENT 2 PLAN

PLOT DATE: 12/17/2014
DRAWN BY: M. SMITH
CHECKED BY: J. BYATT
SHEET 35 OF 52

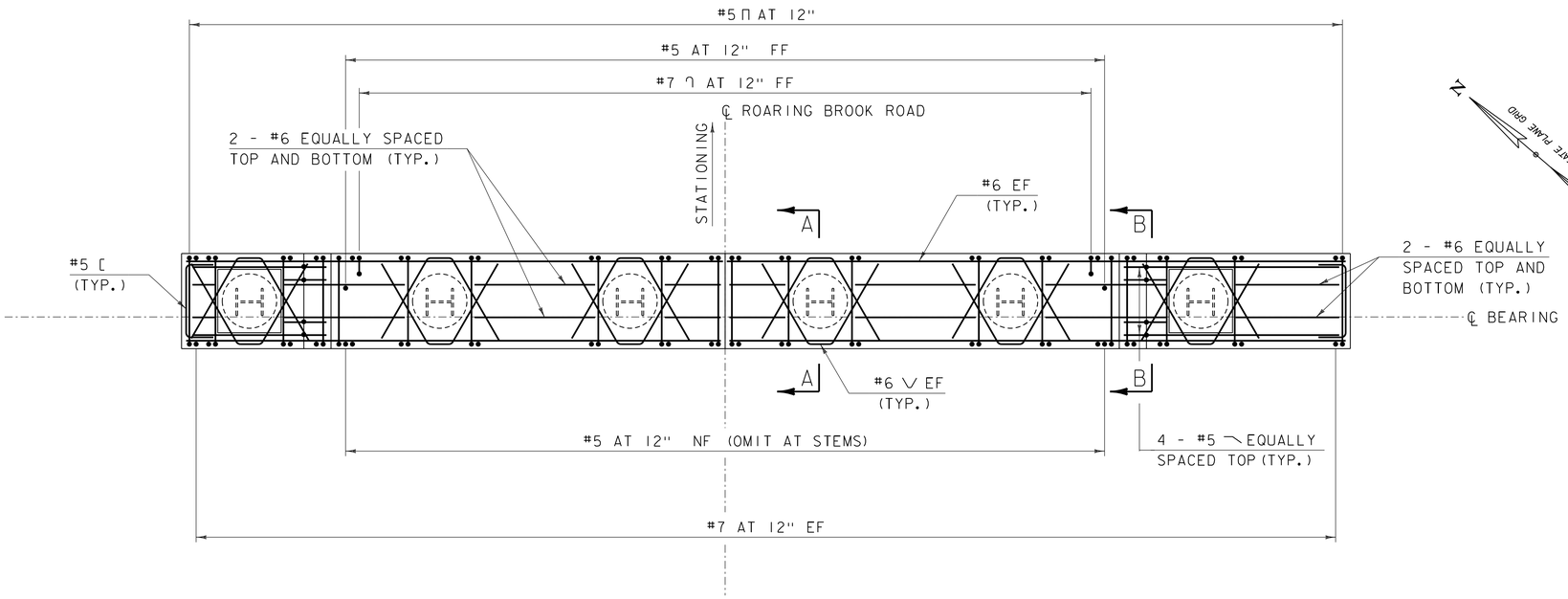


ABUTMENT 2 REINFORCING PLAN (PCU 2)

SCALE: 3/8" = 1'-0"

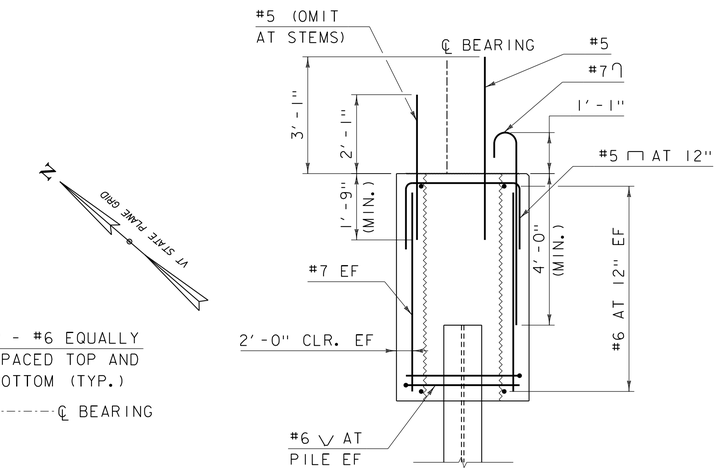


SECTION A-A

SCALE: 1/2" = 1'-0"

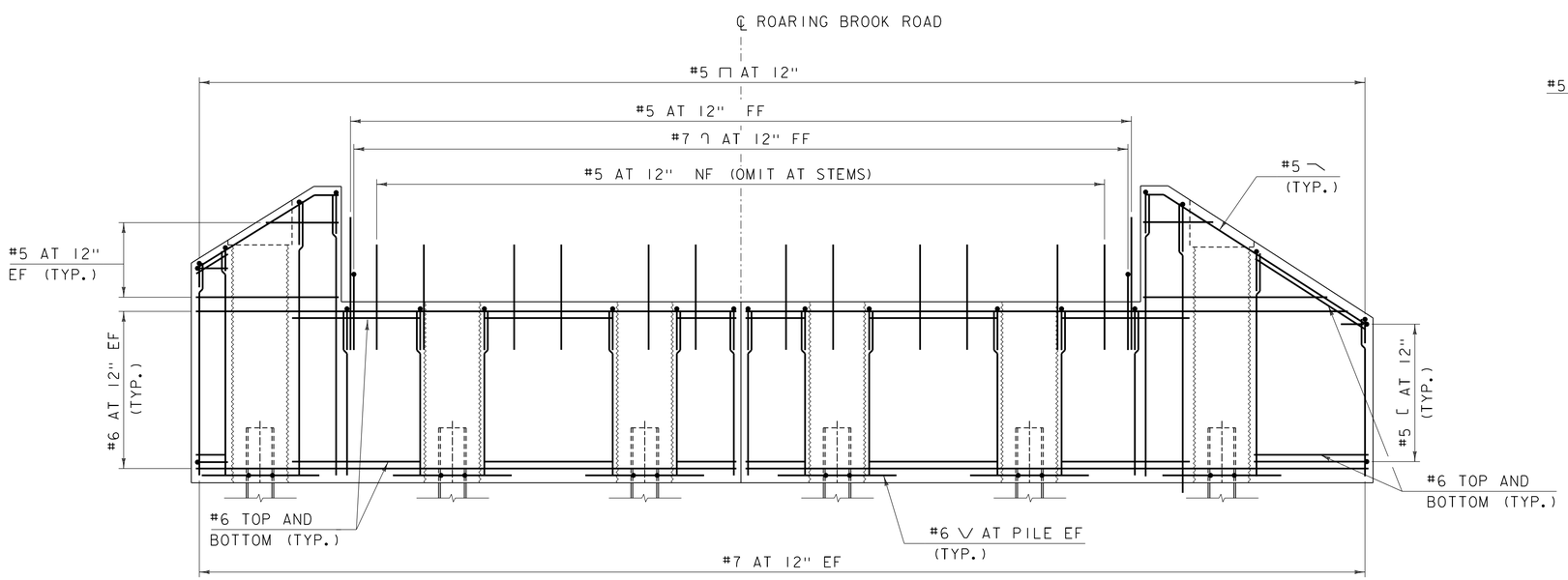


ABUTMENT 2 REINFORCING ELEVATION (PCU 2)

SCALE: 3/8" = 1'-0"

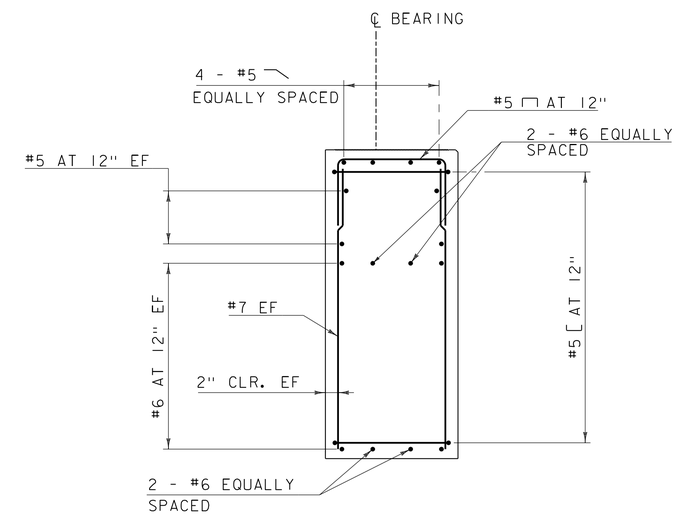


SECTION B-B

SCALE: 1/2" = 1'-0"

| | |
|---|---|
| PROJECT NAME: BARTON | |
| PROJECT NUMBER: BRO 1449(31) | |
| FILE NAME: z11j068abut2.dgn | PLOT DATE: 12/17/2014 |
| PROJECT LEADER: J. BYATT | DRAWN BY: M. SMITH |
| DESIGNED BY: S. BEAUMONT | CHECKED BY: J. BYATT |
| ABUTMENT 2 REINFORCING | SHEET 36 OF 52 |

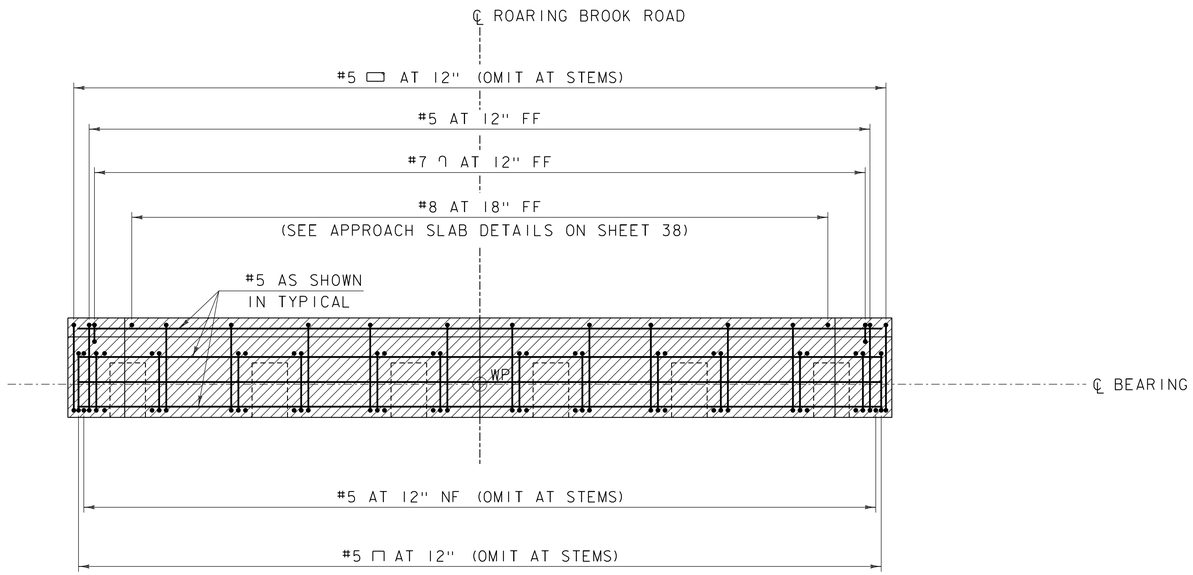


BEAM-END CLOSURE POUR
REINFORCING PLAN
SCALE: 3/8" = 1'-0"

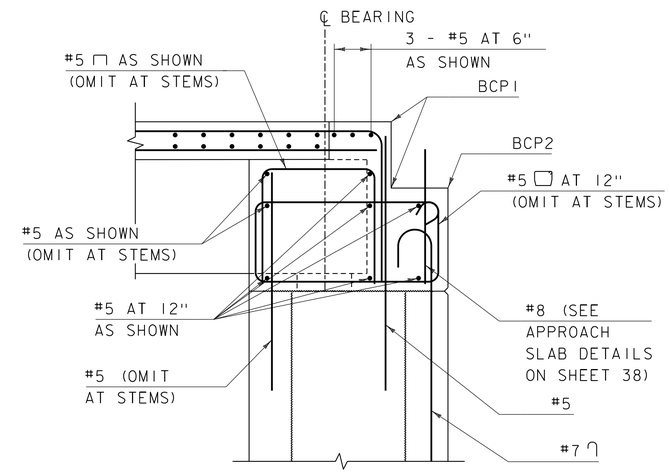


REINFORCING TYPICAL
SCALE: 3/4" = 1'-0"

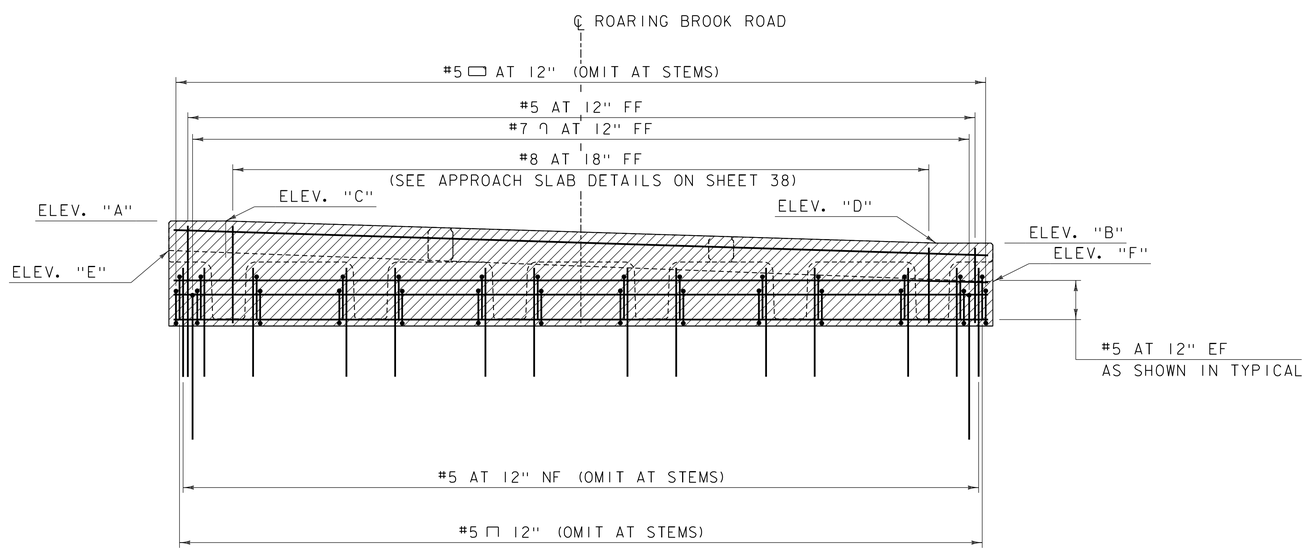


BEAM-END CLOSURE POUR
REINFORCING ELEVATION
SCALE: 3/8" = 1'-0"

NOTE: REINFORCING STEEL FOR ABUTMENT 1 SHOWN, ABUTMENT 2 SIMILAR

## BEAM-END CLOSURE POUR ELEVATIONS

| | BEGIN/END BRIDGE BCP1 | | BACK OF ABUTMENT BCP2 | |
|---|---|---|---|---|
| | ABUT. 1 | ABUT. 2 | ABUT. 1 | ABUT. 2 |
| ELEV "A" | 1140.00 | 1139.98 | - | - |
| ELEV "B" | 1139.20 | 1139.98 | - | - |
| ELEV "C" | 1140.00 | 1139.98 | - | - |
| ELEV "D" | 1139.20 | 1139.98 | - | - |
| ELEV "E" | 1138.91 | 1138.83 | 1138.90 | 1138.83 |
| ELEV "F" | 1137.80 | 1138.64 | 1137.80 | 1138.65 |

NOTE: SEE REINFORCING TYPICAL AND ELEVATION FOR ELEVATION LOCATIONS.

## NOTES:

NF = NEAR FACE
FF = FAR FACE
EF = EACH FACE
2" CLEAR, UNLESS OTHERWISE SPECIFIED ON THE THE PLANS.
2'-6" BAR LAP UNLESS OTHERWISE SPECIFIED ON THE PLANS

SPECIAL PROVISION (HIGH PERFORMANCE CONCRETE, RAPID SET) (FPQ)

PROJECT NAME: BARTON
PROJECT NUMBER: BRO 1449(31)

CONSULTING ENGINEERS

FILE NAME: z11j068abut1.dgn
PROJECT LEADER: J. BYATT
DESIGNED BY: S. BEAUMONT
BEAM-END CLOSURE POUR REINFORCING

PLOT DATE: 12/17/2014
DRAWN BY: M. SMITH
CHECKED BY: J. BYATT
SHEET 37 OF 52

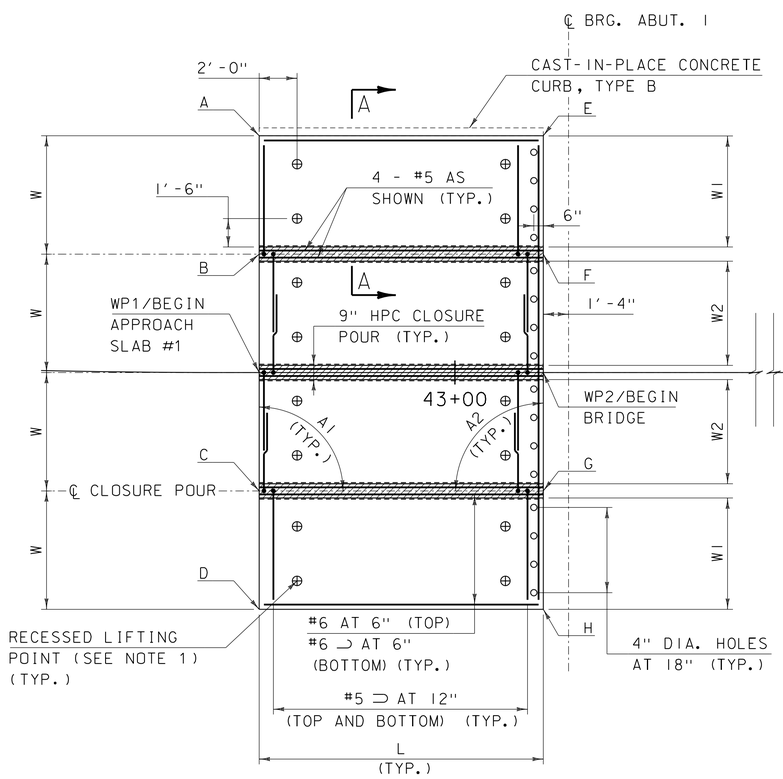


APPROACH SLAB 1 PLAN VIEW

SCALE: 1/4" = 1'-0"

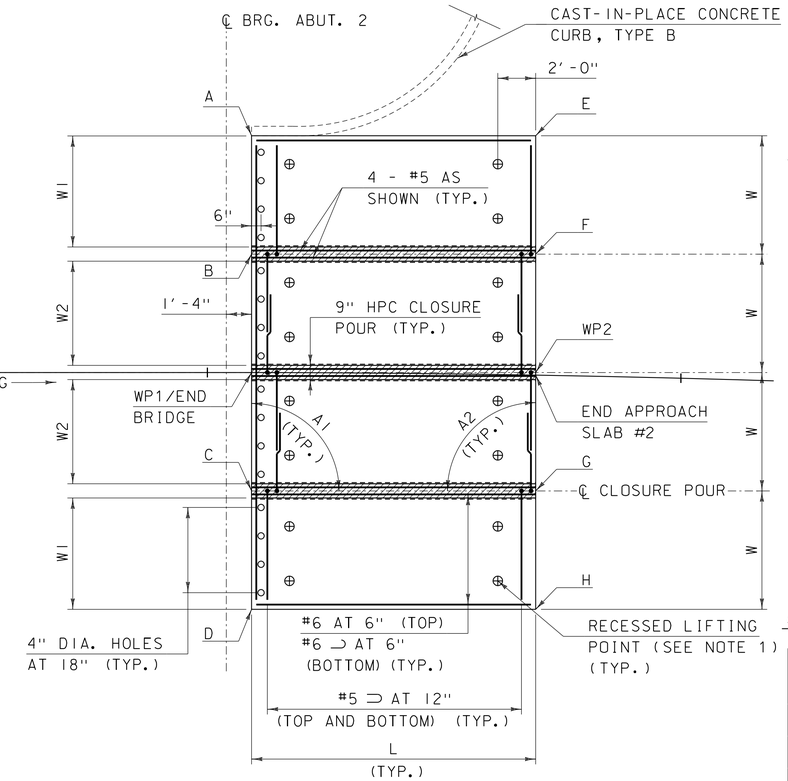


APPROACH SLAB 2 PLAN VIEW

SCALE: 1/4" = 1'-0"

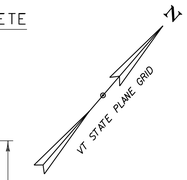


## APPROACH SLAB DIMENSIONS

| | | |
|---|---|---|
| APPROACH SLAB #1 | A1 | 90° |
| | A2 | 90° |
| APPROACH SLAB #2 | A1 | 90° |
| | A2 | 90° |

| | |
|---|---|
| T | VARIES (1'-2" TO 1'-3 7/8") |
| L | 15'-0" |
| W | 6'-3" |
| W1 | 5'-10 1/2" |
| W2 | 5'-6" |

## APPROACH SLAB ELEVATIONS

| | STATION | OFFSET | TOP OF SLAB ELEVATION | BOTTOM OF SLAB ELEVATION |
|---|---|---|---|---|
| 1A | 42+89.67 | -12.50 | 1138.96 | 1137.79 |
| 1B | 42+89.67 | -6.25 | 1139.22 | 1138.02 |
| BEGIN/ WP1 AS #1 | 42+89.67 | 0.00 | 1139.49 | 1138.24 |
| 1C | 42+89.67 | 6.25 | 1139.75 | 1138.47 |
| 1D | 42+89.67 | 12.50 | 1140.01 | 1138.69 |
| 1E | 43+04.67 | -12.50 | 1139.20 | 1137.88 |
| 1F | 43+04.67 | -6.25 | 1139.40 | 1138.12 |
| WP2 AS#1/ BEGIN BRIDGE | 43+04.67 | 0.00 | 1139.60 | 1138.35 |
| 1G | 43+04.67 | 6.25 | 1139.80 | 1138.59 |
| 1H | 43+04.67 | 12.50 | 1140.00 | 1138.83 |
| 2A | 43+52.32 | -12.50 | 1139.98 | 1138.81 |
| 2B | 43+52.33 | -6.25 | 1139.98 | 1138.77 |
| END BRIDGE/ WP1 AS#2 | 43+52.33 | 0.00 | 1139.98 | 1138.74 |
| 2C | 43+52.34 | 6.25 | 1139.98 | 1138.70 |
| 2D | 43+52.35 | 12.50 | 1139.98 | 1138.66 |
| 2E | 43+67.12 | -12.63 | 1140.23 | 1138.91 |
| 2F | 43+67.22 | -6.39 | 1140.16 | 1138.88 |
| WP2 | 43+67.33 | -0.14 | 1140.10 | 1138.86 |
| END AS #2 | 43+67.33 | 0.00 | 1140.10 | 1138.86 |
| 2G | 43+67.44 | 6.11 | 1140.04 | 1138.83 |
| 2H | 43+67.55 | 12.36 | 1139.97 | 1138.80 |

SPECIAL PROVISION (HIGH PERFORMANCE CONCRETE, RAPID SET) (FPQ)

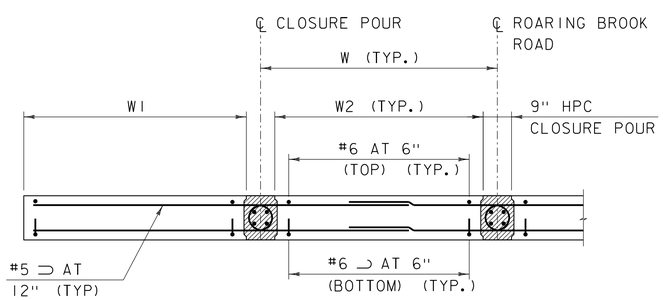


SECTION A-A

SCALE: 1/2" = 1'-0"

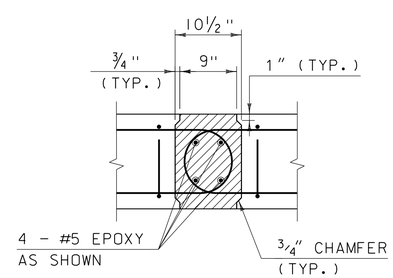


JOINT DETAIL SECTION

SCALE: 1" = 1'-0"

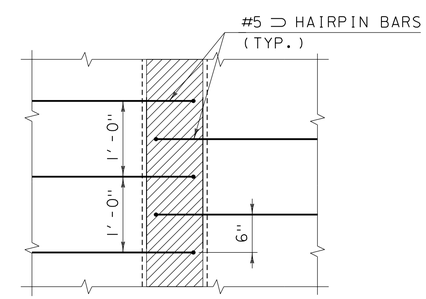


JOINT DETAIL PLAN

SCALE: 1" = 1'-0"

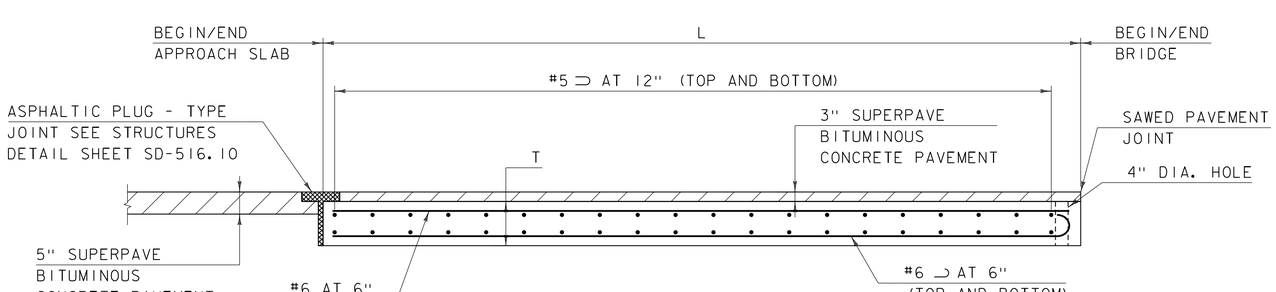


APPROACH SLAB ELEVATION VIEW

SCALE: 1/2" = 1'-0"

NOTES:

1. FABRICATOR TO DESIGN LIFTING POINTS AND INCLUDE CALCULATIONS WITH SUBMITTAL.
2. 2" CLEAR UNLESS OTHERWISE SPECIFIED ON THE PLANS.
3. 2'-6" BAR LAP UNLESS OTHERWISE SPECIFIED ON THE PLANS.
4. THE CROSS SLOPE TRANSITIONS ALONG THE FULL LENGTH OF THE APPROACH SLABS AND BRIDGE. SEE APPROACH SLAB TOP AND BOTTOM ELEVATIONS THIS SHEET.

CONSULTING ENGINEERS

PROJECT NAME: BARTON
PROJECT NUMBER: BRF 0269(13)

FILE NAME: z11j068slab.dgn
PROJECT LEADER: J. BYATT
DESIGNED BY: S. BEAUMONT
APPROACH SLAB DETAILS

PLOT DATE: 12/17/2014
DRAWN BY: M. SMITH
CHECKED BY: J. BYATT
SHEET 38 OF 52

CLD 12-0174 MODEL: Slab01

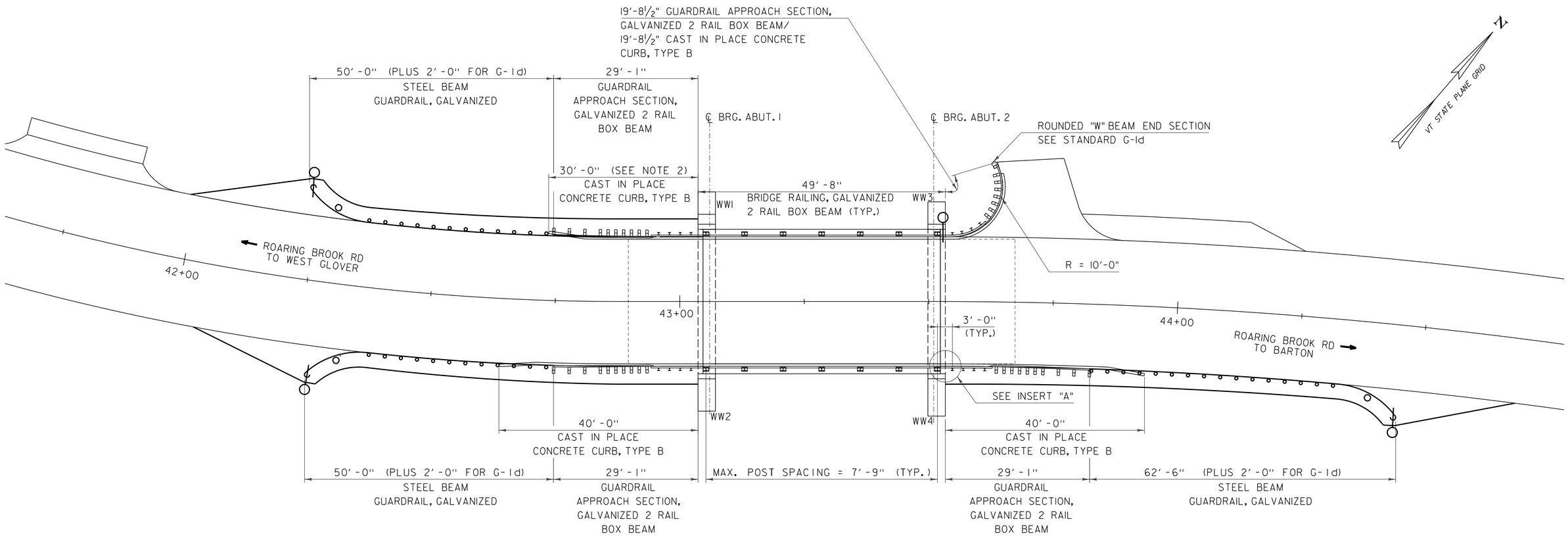


## RAIL AND CURB LAYOUT PLAN

SCALE: 1" = 10'-0"

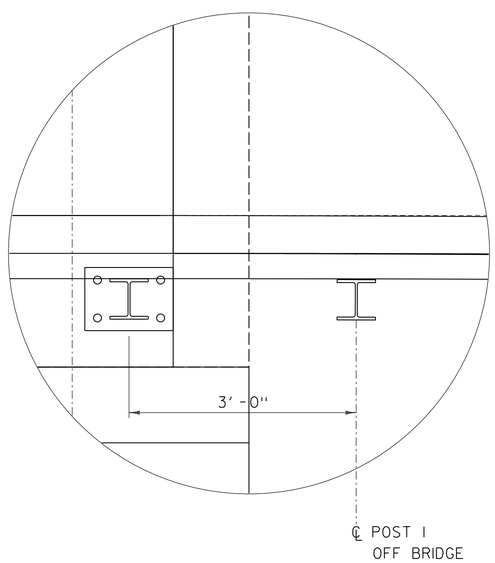


## INSERT "A"

(SOUTHEAST CORNER SHOWN, OTHER CORNERS SIMILAR)
SCALE: 1" = 10'-0"

NOTES:

1. SEE STANDARDS G-1, G-1d, S-360A AND S-360B.
2. NORTHWEST CURB LENGTH HAS BEEN MODIFIED FROM STANDARD TO ACCOMMODATE DRAINAGE AT THE LOW POINT OF THE ROAD. PROVIDE REVEAL TAPER AND FLARE DETAILED IN STANDARD AT REVISED LOCATION.

0 10 20
(SCALE 1" = 10')

| | |
|---|---|
| PROJECT NAME: BARTON | |
| PROJECT NUMBER: BRO 1449(31) | |
| FILE NAME: 11j068/cos/z11j068rail.dgn | PLOT DATE: 12/17/2014 |
| PROJECT LEADER: J. BYATT | DRAWN BY: M. SMITH |
| DESIGNED BY: S. BEAUMONT | CHECKED BY: J. BYATT |
| RAIL AND CURB LAYOUT SHEET | SHEET 39 OF 52 |

CONSULTING ENGINEERS

CLD 12-0174 MODEL: RAIL01

STATE OF VERMONT
AGENCY OF TRANSPORTATION

# REINFORCING STEEL SCHEDULE

| ITEM | EACH | SIZE | LENGTH | MARK | TYPE | A | B | C | D | E | F | G | H | J | K | R | O |
|---|---|---|---|---|---|---|---|---|---|---|---|---|---|---|---|---|---|
| | CURB | | | | | | | | | | | | | | | | |
| ✳ | 13 | 5 | 25'- 9" | D501.2 | STR | 25'- 9" | | | | | | | | | | | |

| ITEM | EACH | SIZE | LENGTH | MARK | TYPE | A | B | C | D | E | F | G | H | J | K | R | O |
|---|---|---|---|---|---|---|---|---|---|---|---|---|---|---|---|---|---|

## ~ NOTES ~

1. UNLESS OTHERWISE DESIGNATED, ALL BAR REINFORCEMENT FOR CONCRETE IN SIZES UP TO AND INCLUDING NO. 18 SHALL CONFORM TO THE REQUIREMENTS OF THE "SPECIFICATIONS FOR DEFORMED BILLET-STEEL BARS FOR CONCRETE REINFORCEMENT", AASHTO M 31 (ASTM A 615-SI). ALL BARS SHALL BE GRADE 60, UNLESS OTHERWISE DESIGNATED.
2. FOR TYPICAL BENDING DETAILS, RECOMMENDED PIN DIAMETER "D" OF BENDS AND HOOKS, AND OTHER STANDARD PRACTICE, SEE CURRENT CONCRETE REINFORCING STEEL INSTITUTE "MANUAL OF STANDARD PRACTICE".
3. BARS WHICH REQUIRE MORE ACCURATE BENDING THAN STANDARD PRACTICES SHOULD HAVE LIMITS INDICATED.
4. ALL DIMENSIONS ARE OUT TO OUT OF BAR EXCEPT "A" AND "G" ON STANDARD 180 DEGREE AND 135 DEGREE HOOKS.
5. "J" DIMENSION ON 180 DEGREE HOOKS TO BE SHOWN ONLY WHERE NECESSARY TO RESTRICT HOOK SIZE. OTHERWISE, STANDARD HOOKS ARE TO BE USED.
6. "H" DIMENSION ON STIRRUPS TO BE SHOWN ONLY WHEN NECESSARY TO MAINTAIN CLEARANCES.
7. WHERE SLOPE DIFFERS FROM 45 DEGREES, DIMENSIONS "H" AND "K" MUST BE SHOWN.
8. ▲ DENOTES BARS TO BE CUT IN FIELD.
9. ✳ DENOTES ONE EXTRA BAR ADDED FOR TESTING PURPOSES.
10. △ DENOTES TWO EXTRA BARS ADDED FOR TESTING PURPOSES.
11. E IN BAR MARK PREFIX DENOTES EPOXY COATED REINFORCING STEEL.

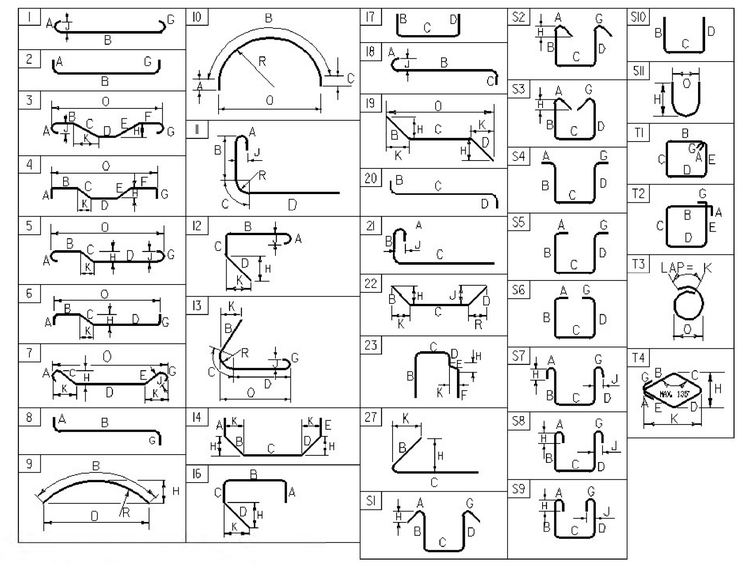


**ASTM STANDARD REINFORCING BARS**

| BAR SIZE DESIGNATION | WEIGHT POUNDS PER FOOT | NOMINAL DIMENSIONS ROUND SECTION | | |
|---|---|---|---|---|
| | | DIAMETER INCHES | AREA INCHES $^2$ | PERIMETER INCHES |
| #3 | 0.376 | 0.375 | 0.11 | 1.178 |
| #4 | 0.668 | 0.500 | 0.20 | 1.571 |
| #5 | 1.043 | 0.625 | 0.31 | 1.963 |
| #6 | 1.502 | 0.750 | 0.44 | 2.356 |
| #7 | 2.044 | 0.875 | 0.60 | 2.749 |
| #8 | 2.670 | 1.000 | 0.79 | 3.142 |
| #9 | 3.400 | 1.128 | 1.00 | 3.544 |
| #10 | 4.303 | 1.270 | 1.27 | 3.990 |
| #11 | 5.313 | 1.410 | 1.56 | 4.430 |
| #14 | 7.65 | 1.693 | 2.25 | 5.32 |
| #18 | 13.60 | 2.257 | 4.00 | 7.09 |

PROJECT NAME: BARTON
PROJECT NUMBER: BRO 1449(31)

FILE NAME: 10c412/cos/$FILEABBREV$
PROJECT LEADER: J. BYATT
DESIGNED BY: S. BEAUMONT
REINFORCING STEEL SCHEDULE

PLOT DATE: 12/17/2014
DRAWN BY: M. SMITH
CHECKED BY: J. BYATT
SHEET 40 OF 52

CLOCK: 12:10:20 PM 12/17/2014 MODEL: Excel Schedule

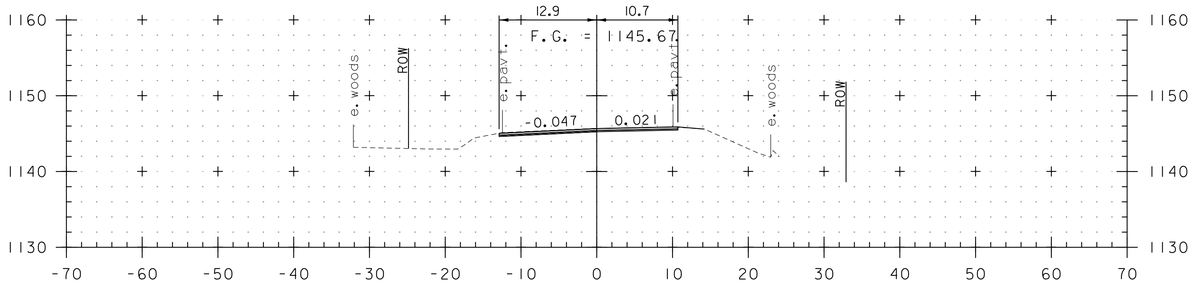


40+00

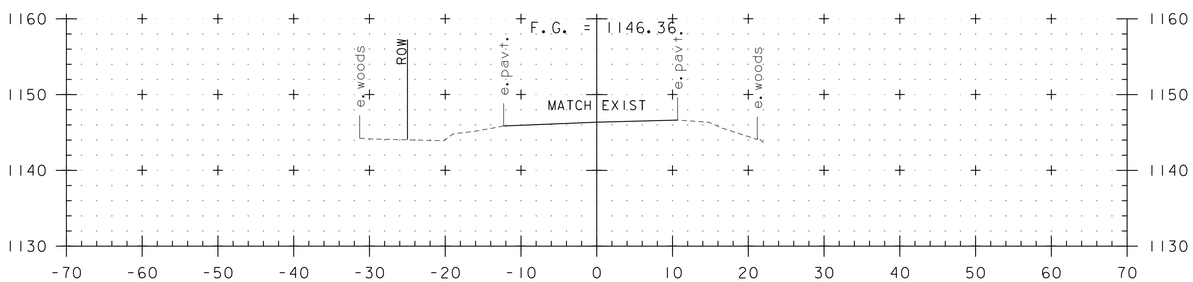


39+75

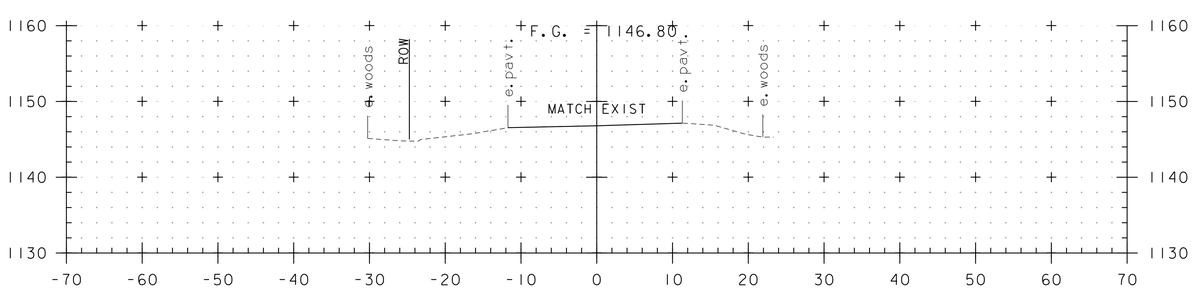


39+50
BEGIN APPROACH

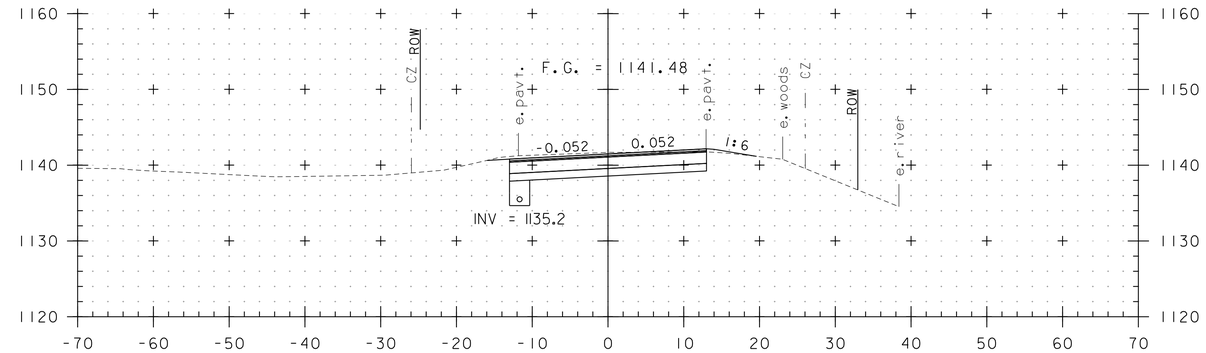


41+50

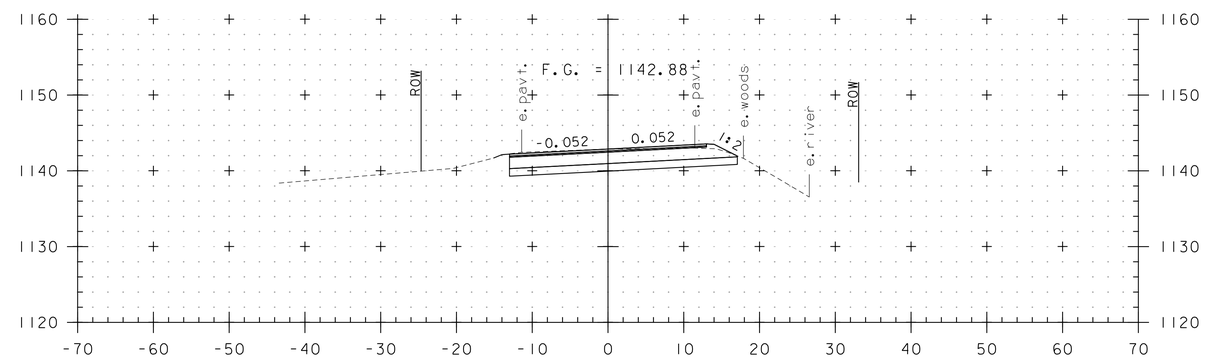


41+00

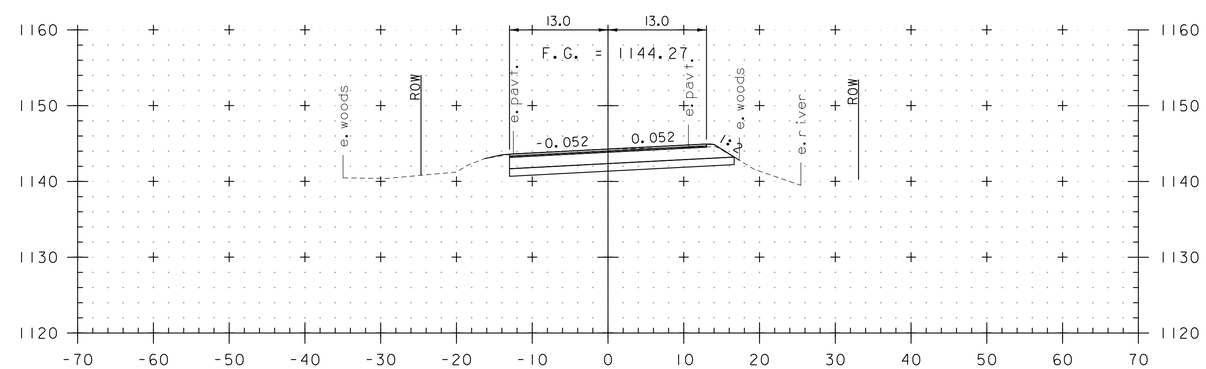


40+50
BEGIN PROJECT

STA. 39+50 TO STA. 41+50

0 10 20
(SCALE 1" = 10')

CONSULTING ENGINEERS

PROJECT NAME: BARTON
PROJECT NUMBER: BRO 1449(31)

FILE NAME: 11j068/cos/z11j068xs.dgn
PROJECT LEADER: J. BYATT
DESIGNED BY: M. HALEY
ROADWAY CROSS SECTIONS 1

PLOT DATE: 12/17/2014
DRAWN BY: M. HALEY
CHECKED BY: P. SHEDD
SHEET 41 OF 52

END APPROACH SLAB
BEGIN BRIDGE
STA. 43+04.67

℄ BRIDGE ABUTMENT #1
STA. 43+06.00

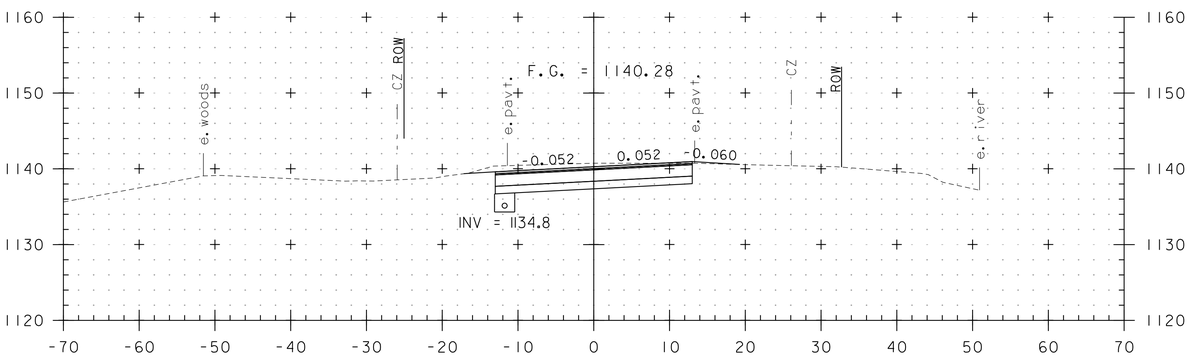


42+00

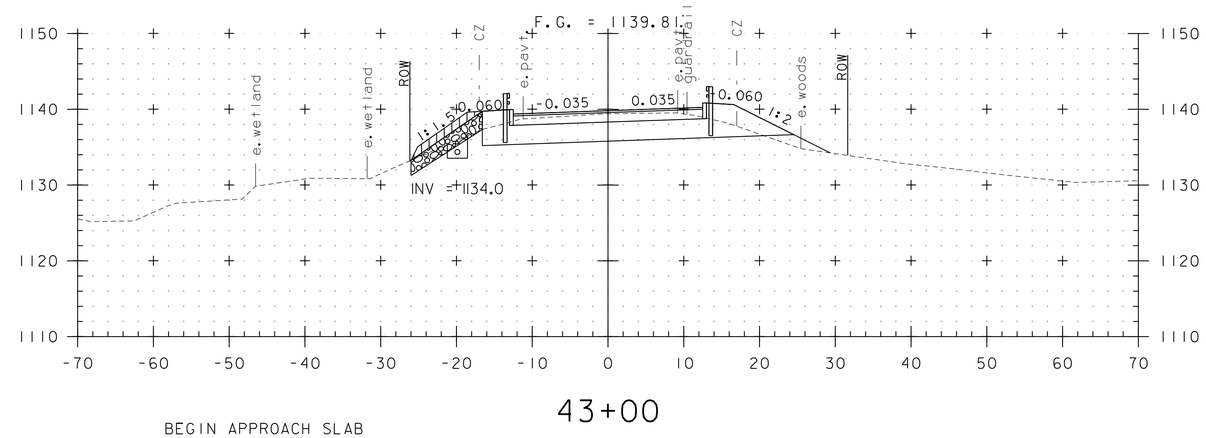


43+00

BEGIN APPROACH SLAB
STA. 42+89.67

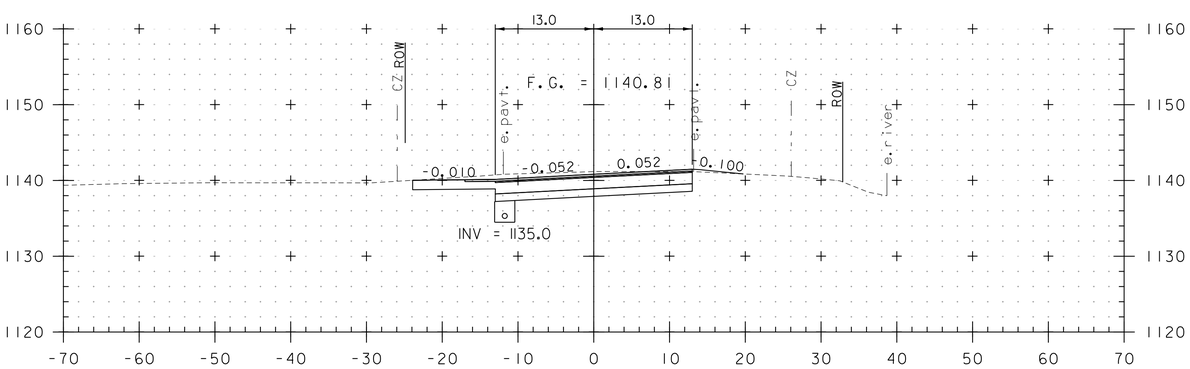


41+75
DRIVE LT

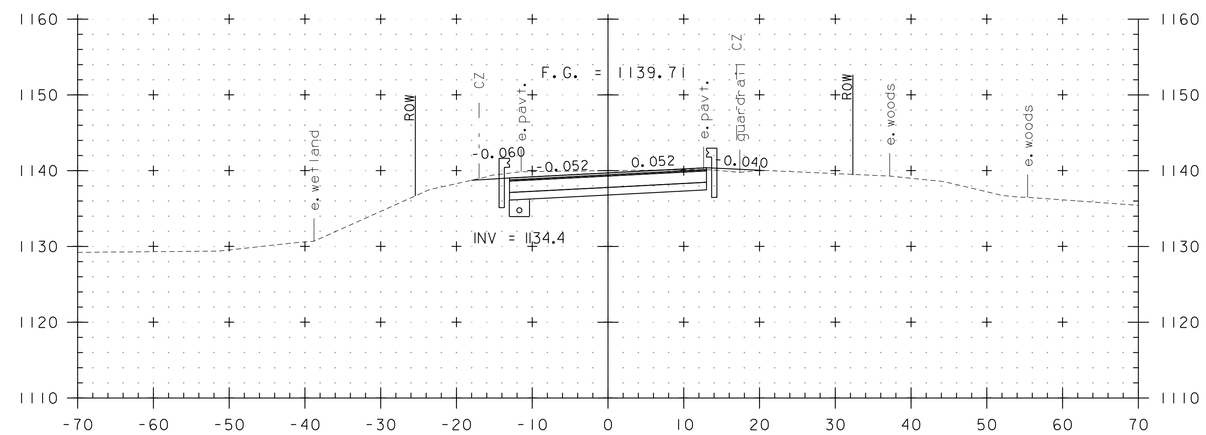


42+50

STA. 41+75 TO STA. 43+00

0 10 20
(SCALE 1" = 10')

CONSULTING ENGINEERS

| | |
|---|---|
| PROJECT NAME: BARTON | |
| PROJECT NUMBER: BRO 1449(31) | |
| FILE NAME: 11j068/cos/z11j068xs.dgn | PLOT DATE: 12/17/2014 |
| PROJECT LEADER: J. BYATT | DRAWN BY: M. HALEY |
| DESIGNED BY: M. HALEY | CHECKED BY: P. SHEDD |
| ROADWAY CROSS SECTIONS 2 | SHEET 42 OF 52 |

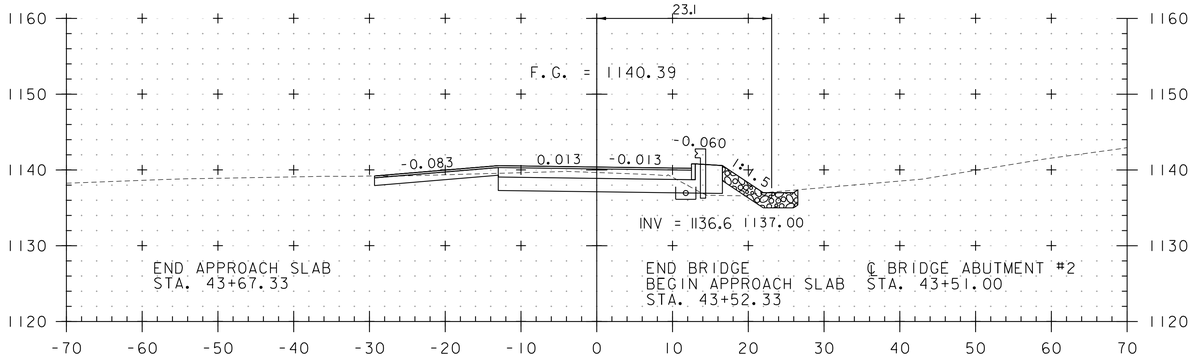


43+72
DRIVE LT

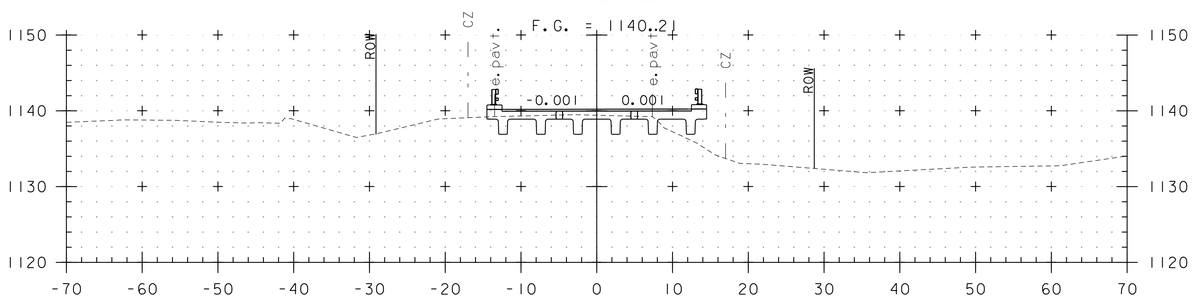


43+50

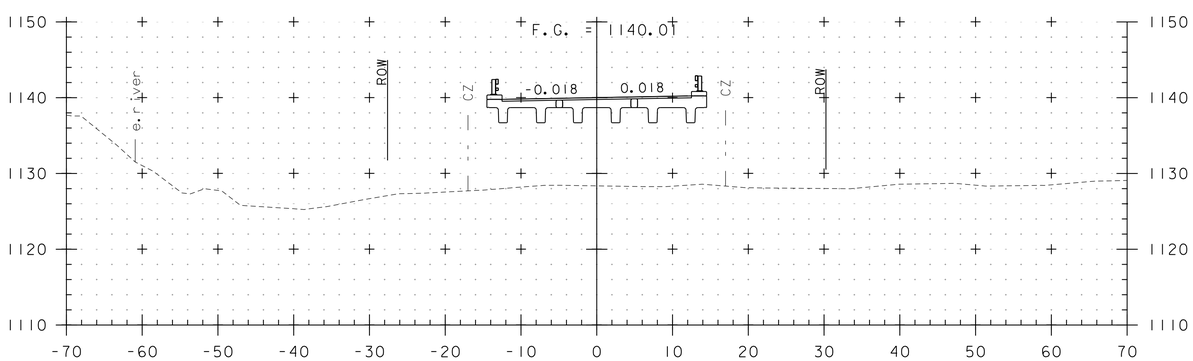


43+25

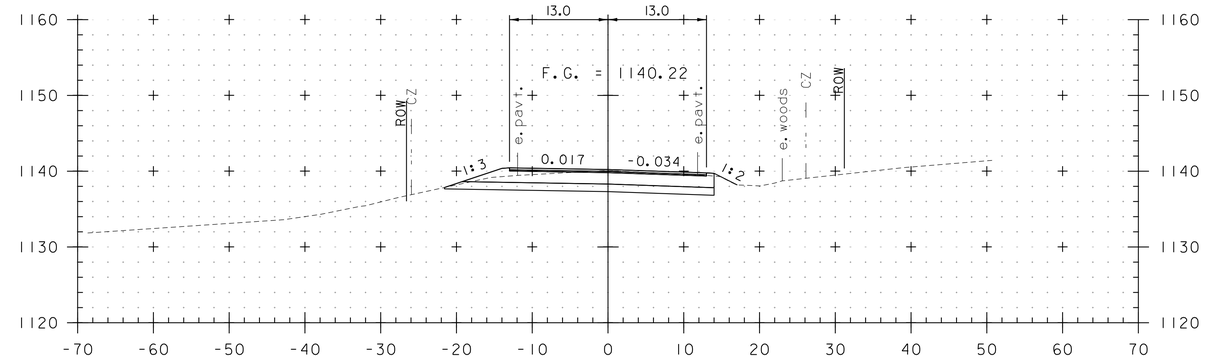


45+00

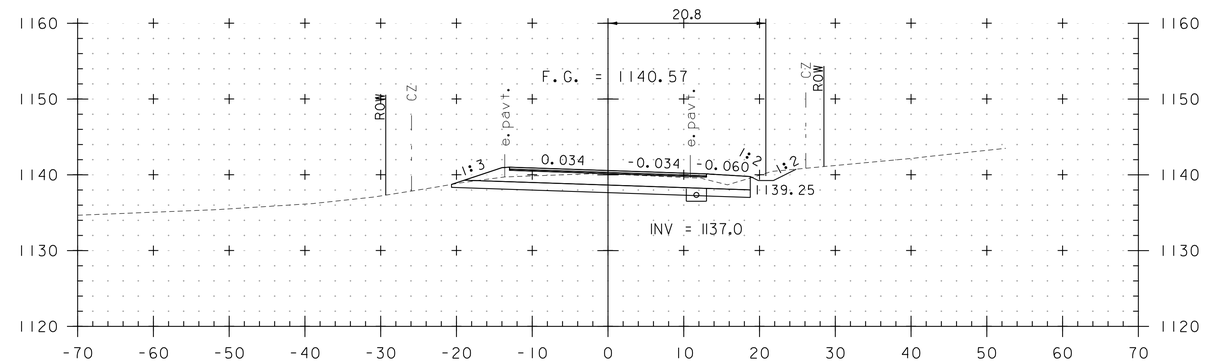


44+50

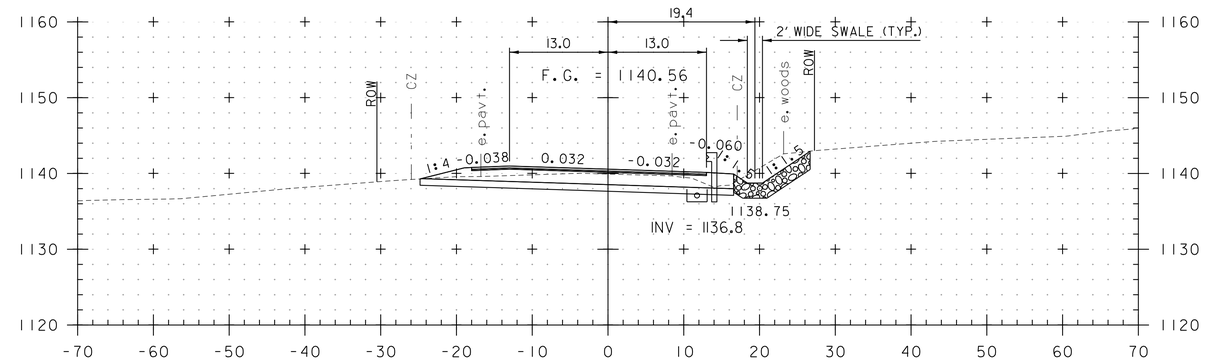


44+00

STA. 43+25 TO STA. 45+00

0 10 20
(SCALE 1" = 10')

CONSULTING ENGINEERS

| | |
|---|---|
| PROJECT NAME: BARTON | |
| PROJECT NUMBER: BRO 1449(31) | |
| FILE NAME: 11j068/cos/z11j068xs.dgn | PLOT DATE: 12/17/2014 |
| PROJECT LEADER: J. BYATT | DRAWN BY: M. HALEY |
| DESIGNED BY: M. HALEY | CHECKED BY: P. SHEDD |
| ROADWAY CROSS SECTIONS 3 | SHEET 43 OF 52 |

CLD 12-017A4 MODEL: XS03

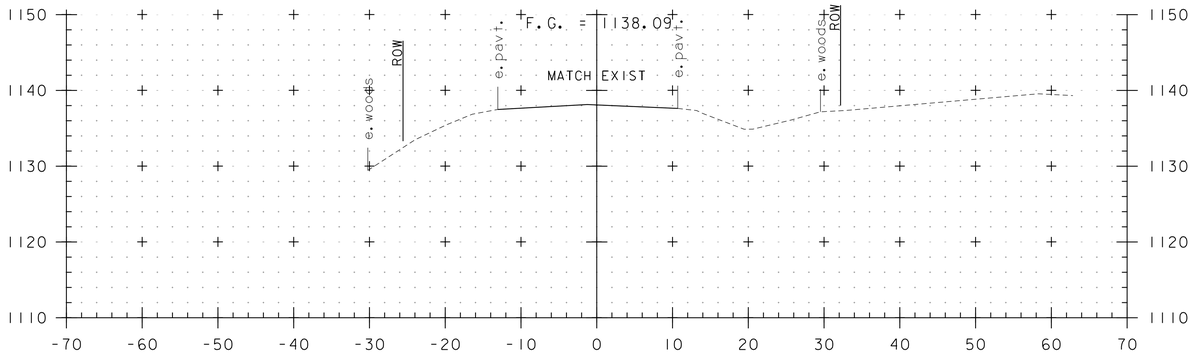


46+25

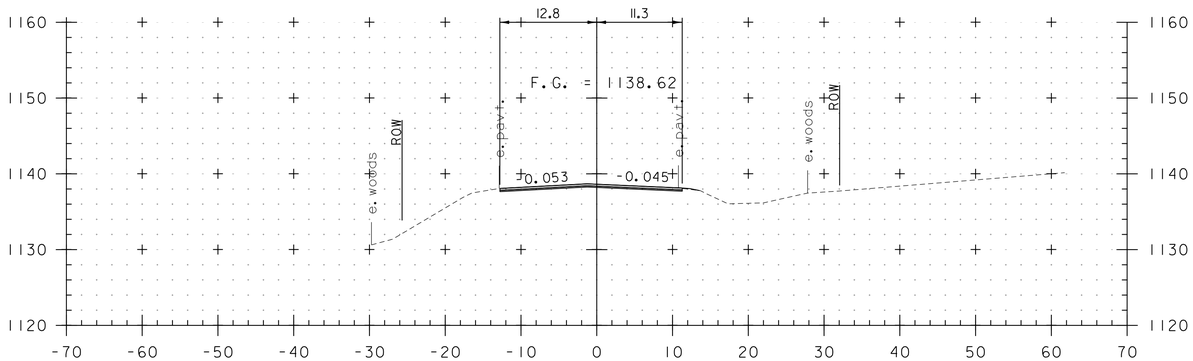


46+00

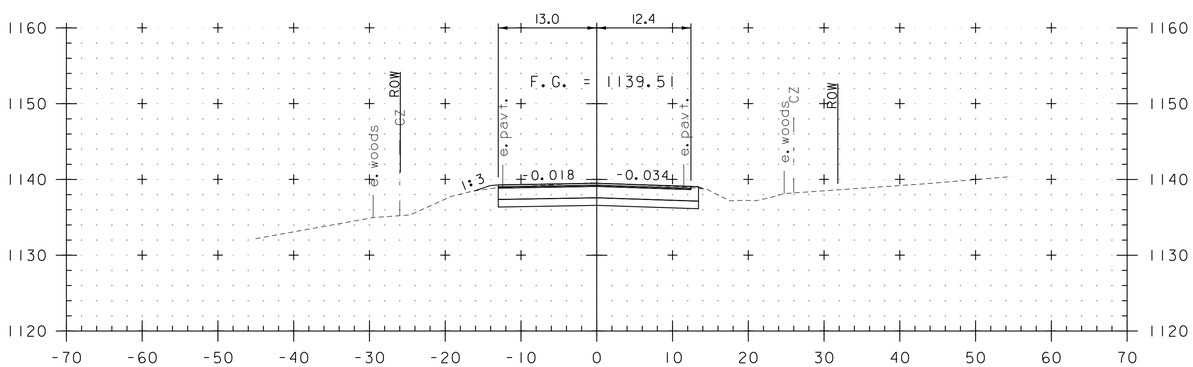


45+50
END PROJECT

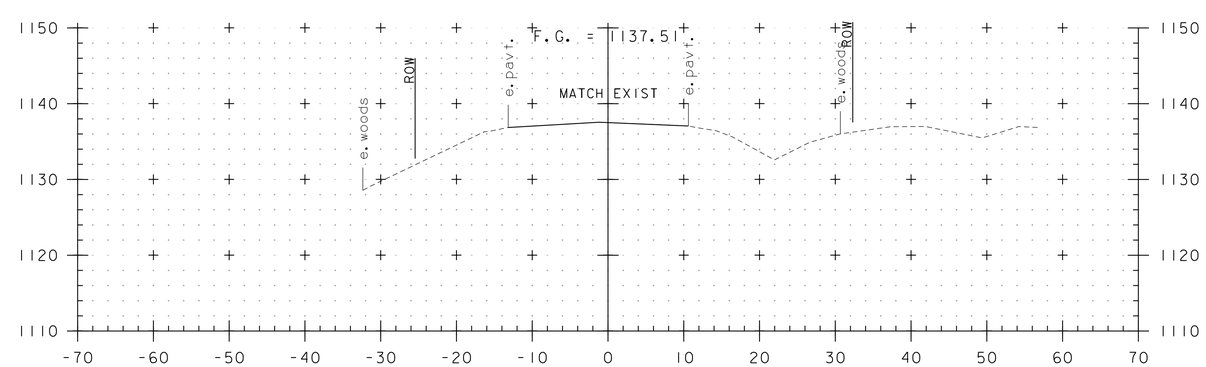


46+50
END APPROACH

STA. 45+50 TO STA. 46+50

0 10 20
(SCALE 1" = 10')

CONSULTING ENGINEERS

| | |
|---|---|
| PROJECT NAME: BARTON | |
| PROJECT NUMBER: BRO 1449(31) | |
| FILE NAME: 11j068/cos/z11j068xs.dgn | PLOT DATE: 12/17/2014 |
| PROJECT LEADER: J. BYATT | DRAWN BY: M. HALEY |
| DESIGNED BY: M. HALEY | CHECKED BY: P. SHEDD |
| ROADWAY CROSS SECTIONS 4 | SHEET 44 OF 52 |

CLD 12-017A4 MODEL: XS04

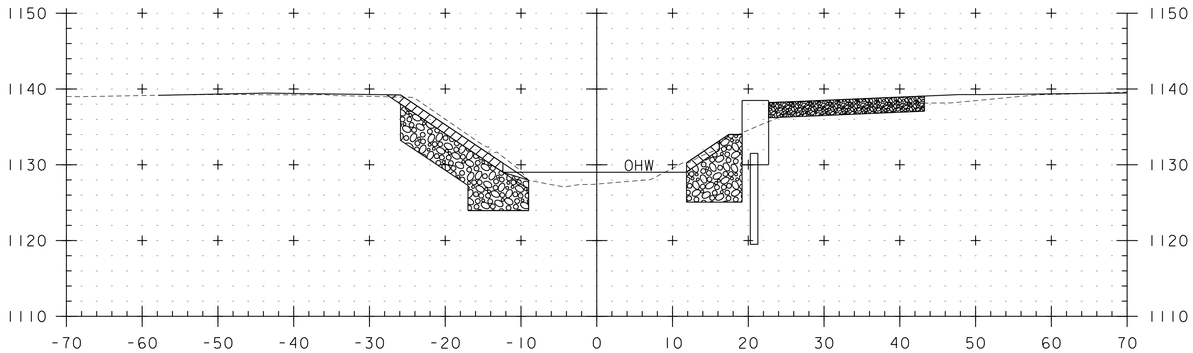


STA. 0+14 LT
BEGIN UNCLASSIFIED CHANNEL EXCAVATION
GEOTEXTILE UNDER STONE FILL
STONE FILL, TYPE IV
GRUBBING MATERIAL

0+20

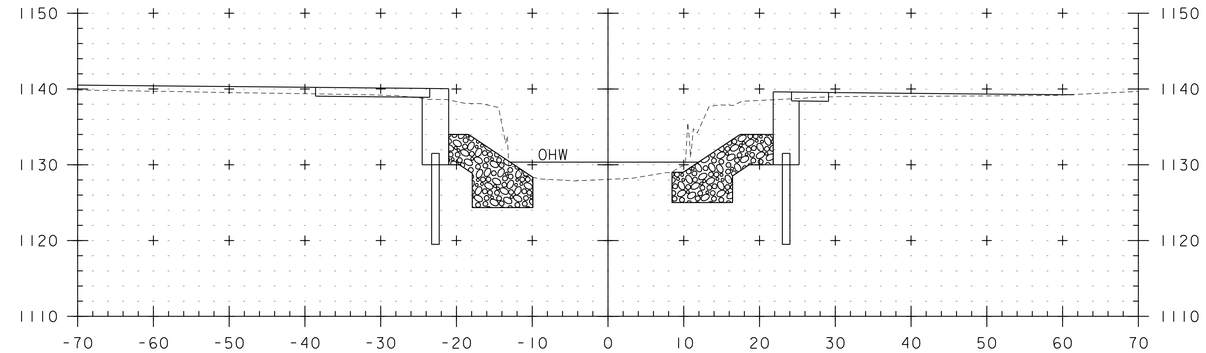


STA. 0+12 RT
BEGIN UNCLASSIFIED CHANNEL EXCAVATION
GEOTEXTILE UNDER STONE FILL
STONE FILL, TYPE IV
GRUBBING MATERIAL

0+50

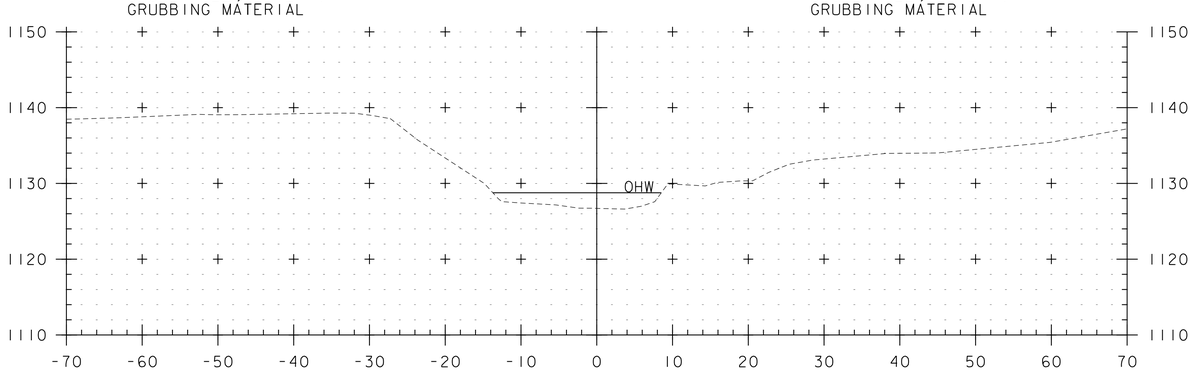


0+10

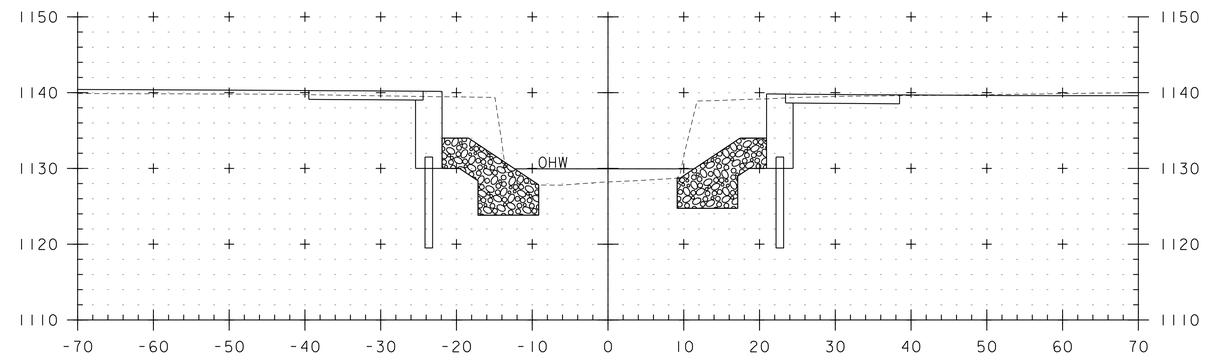


0+40

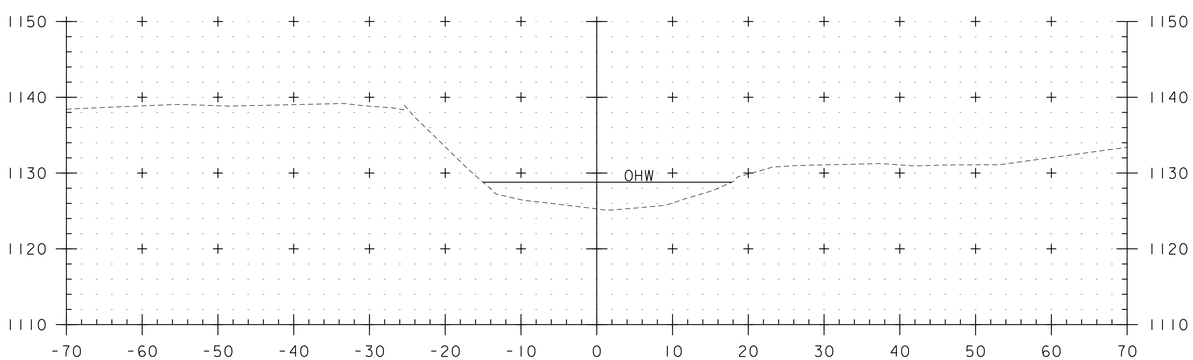


0+00

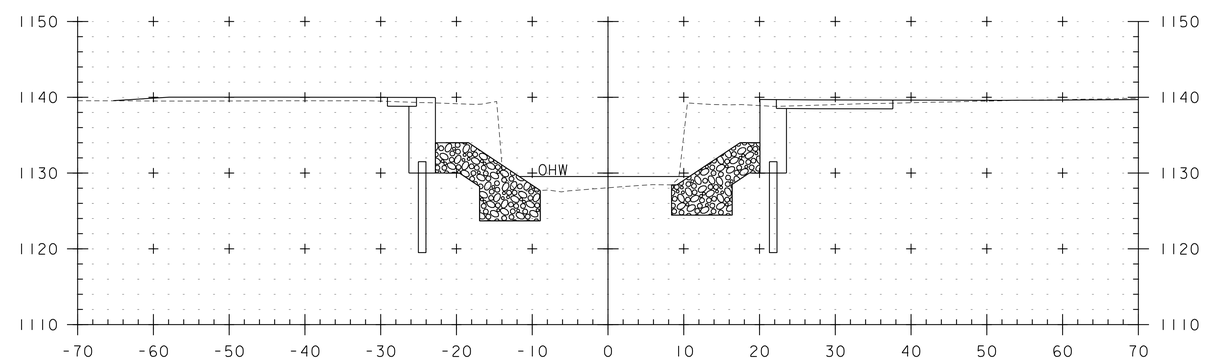


STA. 0+28 LT
STOP GRUBBING MATERIAL

0+30

STA. 0+25 RT
STOP GRUBBING MATERIAL

STA. 0+00 TO STA. 0+50

| | |
|---|---|
| PROJECT NAME: BARTON | |
| PROJECT NUMBER: BRO 1449(31) | |
| FILE NAME: z11j068xschan.dgn | PLOT DATE: 12/17/2014 |
| PROJECT LEADER: J. BYATT | DRAWN BY: M. SMITH |
| DESIGNED BY: S. BEAUMONT | CHECKED BY: J. BYATT |
| CHANNEL CROSS SECTIONS 1 | SHEET 45 OF 52 |

CONSULTING ENGINEERS

MODEL: XSCHAN01

CLD 12-0174

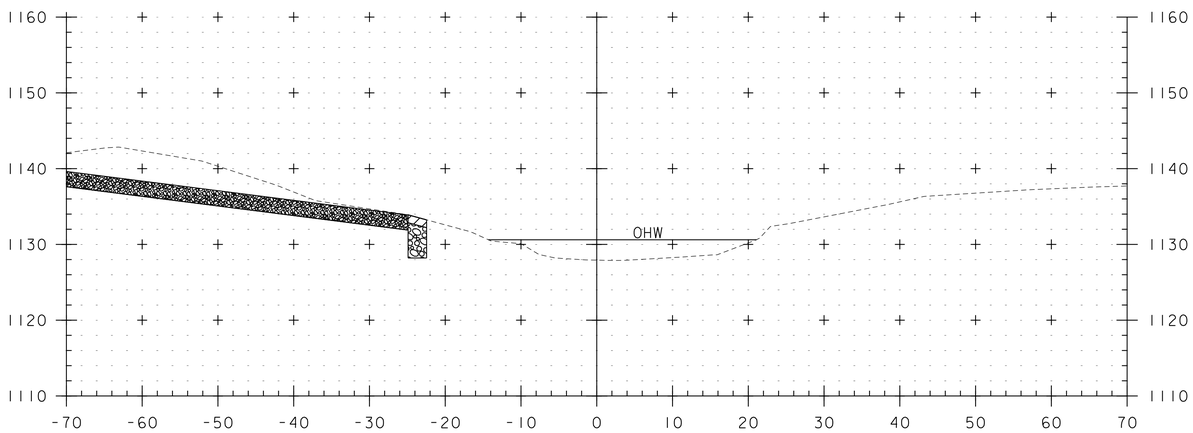


STA. 0+70 LT
END UNCLASSIFIED CHANNEL EXCAVATION
GEOTEXTILE UNDER STONE FILL
STONE FILL, TYPE IV
GRUBBING MATERIAL

0+70

STA. 0+69 RT
END UNCLASSIFIED CHANNEL EXCAVATION
GEOTEXTILE UNDER STONE FILL
STONE FILL, TYPE IV
GRUBBING MATERIAL

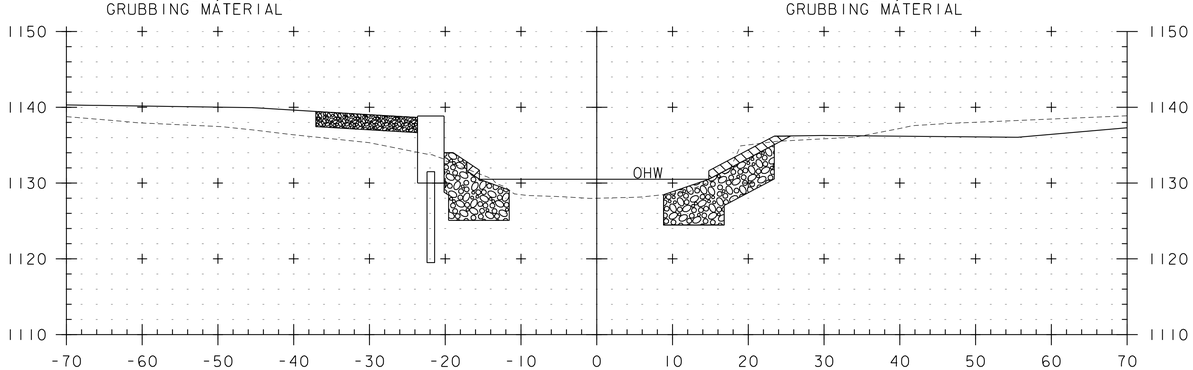


STA. 0+55 LT
RESUME GRUBBING MATERIAL

0+60

STA. 0+52 RT
RESUME GRUBBING MATERIAL

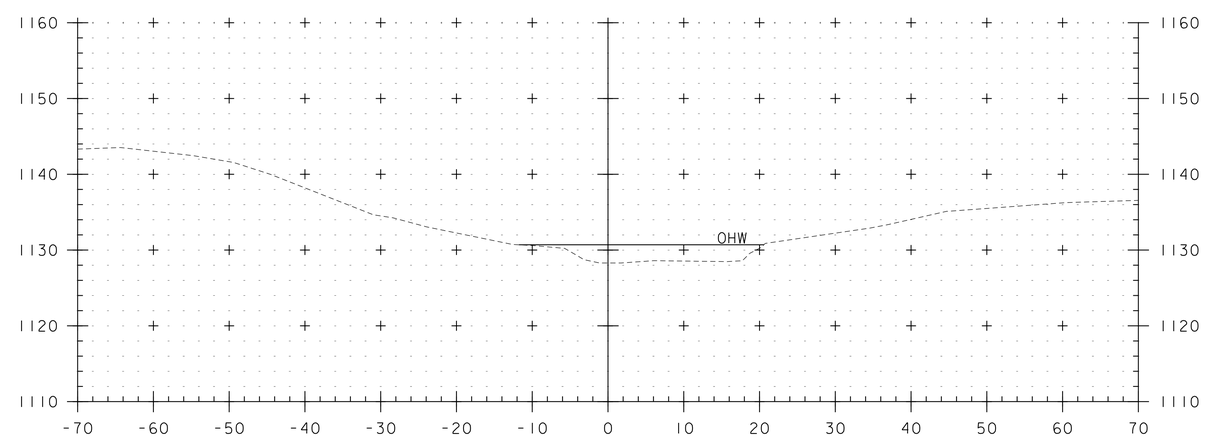


0+80

STA. 0+60 TO STA. 0+80

CONSULTING ENGINEERS

| | |
|---|---|
| PROJECT NAME: BARTON | |
| PROJECT NUMBER: BRO 1449(31) | |
| FILE NAME: z11j068xschan.dgn | PLOT DATE: 12/17/2014 |
| PROJECT LEADER: J. BYATT | DRAWN BY: M. SMITH |
| DESIGNED BY: S. BEAUMONT | CHECKED BY: J. BYATT |
| CHANNEL CROSS SECTIONS 2 | SHEET 46 OF 52 |

MODEL: XSCHAN02

CLD 12-017A

# EPSC PLAN NARRATIVE

## 1.1 PROJECT DESCRIPTION

THIS PROJECT INVOLVES THE REMOVAL OF BRIDGE 8, INCLUDING ABUTMENTS AND FOUNDATIONS. BRIDGE 8 WILL BE REPLACED WITH A PRECAST STRUCTURE SPANNING APPROXIMATELY 45 FEET OVER THE ROARING BROOK, ON NEW FOOTINGS ALONG APPROXIMATELY THE SAME ALIGNMENT. BRIDGE 8 IS LOCATED IN THE TOWN OF BARTON, ON ROARING BROOK ROAD, APPROXIMATELY 0.78 MILES EASTERLY OF THE GLOVER/BARTON TOWN LINE. THE WIDTH OF THE BRIDGE WILL BE INCREASED TO 29 FEET.

NOTE: AREA OF DISTURBANCE INCLUDES LIMITS OF EARTH DISTURBANCE WITHIN THE PROJECT AREA, AS WELL AS WASTE, BORROW AND STAGING AREAS, AND OTHER EARTH DISTURBING ACTIVITIES WITHIN OR DIRECTLY ADJACENT TO THE PROJECT LIMITS AS SHOWN ON THE ATTACHED EPSC PLAN.

TOTAL AREA OF DISTURBANCE AS SHOWN ON THE ATTACHED EPSC PLAN IS APPROXIMATELY 0.40 ACRES.

IT IS ANTICIPATED THAT THIS PROJECT WILL LAST ONE CONSTRUCTION SEASON.

## 1.2 SITE INVENTORY

### 1.2.1 TOPOGRAPHY

THE TOPOGRAPHY OF THE AREA IS HILLY TO MOUNTAINOUS WITH A MOSTLY WELL ESTABLISHED FOREST WITH OCCASIONAL OPEN AREAS. ROARING BROOK ROAD AND MULTIPLE DRIVEWAYS ARE WITHIN THE PROJECT SITE. THERE IS A RESIDENCE ON THE NORTH SIDE OF THE PROJECT WITH GRASS AND TREE BUFFERS.

### 1.2.2 DRAINAGE, WATERWAYS, BODIES OF WATER, AND PROXIMITY TO NATURAL OR MAN-MADE WATER FEATURES

THE ROARING BROOK AND AN ARTISAN WELL ARE THE ONLY WATER SOURCES ON THE PROJECT SITE. THE BROOK IS CLASSIFIED AS SINUOUS, NON-ALLUVIAL, AND NARROW WITH A CONFINED AND ARMORED CHANNEL AT THE SITE. THE STREAM BED CONSISTS OF GRAVEL, COBBLES AND BOULDERS. THE TRIBUTARY AREA AT THE BRIDGE CROSSING IS 10 SQUARE MILES. DUE TO THE NATURE OF THE SURROUNDING TERRAIN THE PROJECT SITE COULD RECEIVE RUNOFF WATER FROM A FEW NEARBY SLOPES.

### 1.2.3 VEGETATION

THE VEGETATION IN THE PROJECT AREA CONSISTS OF HARDWOOD TREES AND UNDERGROWTH. THE IMPACT TO VEGETATION WILL BE LIMITED TO THAT WHICH IS DIRECTLY AFFECTED BY REPLACEMENT OF THE EXISTING BRIDGE AND SLOPE GRADING. UPON PROJECT COMPLETION, THE CHANNEL WILL BE ARMORED WITH STONE FILL TYPE IV AS SPECIFIED ON THE PLANS. DISTURBED VEGETATION WILL BE REESTABLISHED WITH STANDARD SEED AND MULCH PRACTICES.

### 1.2.4 SOILS

ALL SOIL DATA CAME FROM THE U.S. DEPARTMENT OF AGRICULTURE SOIL CONSERVATION SERVICE FOR THE COUNTY OF ORLEANS, VERMONT. SOILS ON THE PROJECT SITE ARE BUCKLAND FINE SANDY LOAM, 35% TO 60% SLOPES, VERY STONY, “K FACTOR” = 0.37. THE SOIL IS CONSIDERED HIGHLY ERODIBLE DUE TO SIGNIFICANT SLOPES.

**NOTE**: K-VALUES GENERALLY INDICATE THE FOLLOWING:
0.0-0.23 = LOW EROSION POTENTIAL
0.24-0.36 = MODERATE EROSION POTENTIAL
0.37 AND HIGHER = HIGH EROSION POTENTIAL

### 1.2.5 SENSITIVE RESOURCE AREAS
CRITICAL HABITATS: NO
HISTORICAL OR ARCHEOLOGICAL AREAS: YES. ONE ARCHAEOLOGICALLY SENSITIVE AREA SOUTHWEST OF THE BRIDGE AND ONE ARCHAEOLOGICALLY SENSITIVE AREA SOUTHEAST OF THE BRIDGE.
PRIME AGRICULTURAL LAND: NO
THREATENED AND ENDANGERED SPECIES: NO
WATER RESOURCE: ROARING BROOK
WETLANDS: YES. TWO SMALL AREAS, ONE UPSTREAM AND ONE DOWNSTREAM OF THE BRIDGE. THE PROPOSED WORK WILL NOT IMPACT EITHER AREA.

## 1.3 RISK EVALUATION

THIS PROJECT DOES NOT FALL UNDER THE JURISDICTION OF GENERAL PERMIT 3-9020 FOR STORMWATER RUNOFF FROM CONSTRUCTION SITES. SHOULD CHANGES PRIOR TO OR DURING CONSTRUCTION RESULT IN ONE OR MORE ACRES OF EARTH DISTURBANCE OR SHOULD THE PROJECT BECOME PART OF A LARGER PLAN OF DEVELOPMENT, THE CONTRACTOR WILL BE RESPONSIBLE FOR ANY ADDITIONAL PERMITTING.

## 1.4 EROSION PREVENTION AND SEDIMENT CONTROL

THE EROSION CONTROL PLANS ARE MEANT AS A GUIDELINE FOR PREVENTING EROSION AND CONTROLLING SEDIMENT TRANSPORT. THE PRINCIPLES OUTLINED IN THIS NARRATIVE CONSIST OF APPLYING MEASURES THROUGHOUT CONSTRUCTION OF THE PROJECT IN ORDER TO MINIMIZE SEDIMENT TRANSPORT TO THE RECEIVING WATERS. THE MEASURES INCLUDE STABILIZATION AND STRUCTURAL PRACTICES, STORM WATER CONTROLS AND OTHER POLLUTION PREVENTION PRACTICES. THEY HAVE BEEN PROPOSED BY THE DESIGNER AS A BASIS FOR PROTECTING RESOURCES AND WILL NEED TO BE BUILT UPON BASED ON THE SPECIFIC MEANS AND METHODS OF THE CONTRACTOR. REFER TO THE LOW RISK SITE HANDBOOK AND APPROPRIATE DETAIL SHEETS FOR SPECIFIC GUIDANCE AND CONSTRUCTION DETAILING.

ALL MEASURES SHALL BE REGULARLY MAINTAINED AND SHALL BE CHECKED FOR SEDIMENT BUILD-UP. SEDIMENT SHALL BE DISPOSED OF AT AN APPROVED SITE WHERE IT WILL NOT BE SUBJECT TO EROSION.

### 1.4.1 MARK SITE BOUNDARIES
SITE BOUNDARIES AND AREAS CONSTRUCTION EQUIPMENT CAN ACCESS SHALL BE DELINEATED.

PROJECT DEMARCATION FENCING (PDF) SHALL BE USED TO PHYSICALLY MARK SITE BOUNDARIES.

### 1.4.2 LIMIT DISTURBANCE AREA
PREVENTING INITIAL SOIL EROSION BY MINIMIZING THE EXPOSED AREA IS MUCH MORE EFFECTIVE THAN TREATING ERODED SEDIMENT. EARTH DISTURBANCE CAN BE MINIMIZED THROUGH CONSTRUCTION PHASING BY ONLY OPENING UP EARTH AS NECESSARY. THIS CAN LIMIT THE AREA THAT WILL BE DISTURBED AND EXPOSED TO EROSION. EMPLOY TEMPORARY CONSTRUCTION STABILIZATION PRACTICES IN INCREMENTAL STAGES AS PHASES CHANGE. FOR PROJECTS WHICH FALL UNDER THE CONSTRUCTION GENERAL PERMIT, ONLY THE ACREAGE LISTED ON THE PERMIT AUTHORIZATION MAY BE EXPOSED AT ANY GIVEN TIME.

MAINTAINING VEGETATED BUFFERS ALONG STREAM BANKS, WETLANDS OR OTHER SENSITIVE AREAS IS A CRUCIAL EROSION AND SEDIMENT CONTROL MEASURE THAT SHOULD BE ESTABLISHED WHEREVER POSSIBLE.

### 1.4.3 SITE ENTRANCE/EXIT STABILIZATION
TRACKING OF SEDIMENT ONTO PUBLIC HIGHWAYS SHALL BE MINIMIZED TO REDUCE THE POTENTIAL FOR RUNOFF ENTERING RECEIVING WATERS. INSTALLATION SHALL COINCIDE WITH THE CONTRACTOR’S PROGRESS SCHEDULE.

STABILIZED CONSTRUCTION ENTRANCES ARE NOT ANTICIPATED TO BE NEEDED AS DESIGNED. THE EXISTING ROADWAY WILL BE CLOSED TO ALL TRAFFIC AND WILL BE UTILIZED TO ACCESS THE BRIDGE.

### 1.4.4 INSTALL SEDIMENT BARRIERS
SEDIMENT BARRIERS SHALL BE UTILIZED TO INTERCEPT RUNOFF AND ALLOW SUSPENDED SEDIMENT TO SETTLE OUT. THEY SHALL BE INSTALLED PRIOR TO ANY UP SLOPE WORK.

SILT FENCE WILL BE INSTALLED AS PROPOSED ON THE EPSC PLAN.

### 1.4.5 DIVERT UPLAND RUNOFF
DIVERSIONARY MEASURES SHALL BE USED TO INTERCEPT RUNOFF FROM ABOVE THE CONSTRUCTION AND DIRECT IT AROUND THE DISTURBED AREA SO THAT CLEAN WATER DOES NOT BECOME MUDDIED WHILE TRAVELING OVER EXPOSED SOILS ON THE CONSTRUCTION SITE.

DIVERSION MEASURES ARE NOT ANTICIPATED TO BE NEEDED AS DESIGNED.

### 1.4.6 SLOW DOWN CHANNELIZED RUNOFF
CHECK STRUCTURES SHALL BE UTILIZED TO REDUCE THE VELOCITY, AND THUS THE EROSIVE POTENTIAL, OF CONCENTRATED FLOW IN CHANNELS.

STONE CHECK DAMS WILL BE INSTALLED AS PROPOSED ON THE EPSC PLAN, AT A MINIMUM.

### 1.4.7 CONSTRUCT PERMANENT CONTROLS
PERMANENT STORMWATER TREATMENT DEVICES SHALL BE INSTALLED AS SHOWN ON THE PLANS AND IN ACCORDANCE WITH PERMIT CONDITIONS.

PERMANENT STORMWATER TREATMENT DEVICES ARE NOT ANTICIPATED TO BE NEEDED AS DESIGNED.

### 1.4.8 STABILIZE EXPOSED SOILS DURING CONSTRUCTION
ALL AREAS OF DISTURBANCE MUST HAVE TEMPORARY STABILIZATION IN PLACE WITHIN 48 HOURS OF DISTURBANCE OR IN ACCORDANCE WITH THE CONSTRUCTION GENERAL PERMIT 3-9020 AUTHORIZATION.

SURFACE ROUGHENING OF ALL EXPOSED SLOPES, COMBINED WITH TEMPORARY MULCHING, SHALL BE UTILIZED ON A REGULAR BASIS. BIODEGRADABLE EROSION CONTROL MATTING OR AN EQUIVALENT SHALL BE USED TO STABILIZE ALL SLOPES STEEPER THAN 1:3.

THE FORECAST OF RAINFALL EVENTS SHALL TRIGGER IMMEDIATE PROTECTION OF EXPOSED SOILS.

### 1.4.9 WINTER STABILIZATION

VARIOUS MEASURES SPECIFIC TO WINTER MAY BE NECESSARY SHOULD THE PROJECT EXTEND INTO WINTER (OCTOBER 15 THROUGH APRIL 15). REFER TO THE LOW RISK SITE HANDBOOK FOR GUIDANCE.

WINTER STABILIZATION IS NOT ANTICIPATED TO BE NEEDED AS DESIGNED.

### 1.4.10 STABILIZE SOIL AT FINAL GRADE
EXPOSED SOIL MUST BE STABILIZED WITHIN 48 HOURS OF REACHING FINAL GRADE.

SEED, MULCH, FERTILIZER AND LIME SHALL BE USED TO ESTABLISH PERMANENT VEGETATION. FOR SLOPES STEEPER THAN 1:3, BIODEGRADABLE EROSION CONTROL MATTING OR AN EQUIVALENT SHALL BE USED INSTEAD OF MULCH.

TEMPORARY EROSION MATTING SHALL BE USED TO STABILIZE ROADWAY SLOPES AND STONE FILL SHALL BE USED TO STABILIZE THE CHANNEL AS SHOWN ON THE PLANS.

### 1.4.11 DE-WATERING ACTIVITIES
DISCHARGE FROM DEWATERING ACTIVITIES THAT FLOWS OFF OF THE CONSTRUCTION SITE MUST NOT CAUSE OR CONTRIBUTE TO A VIOLATION OF THE VERMONT WATER QUALITY STANDARDS.

TREATMENT OF DISCHARGE FROM DEWATERING ACTIVITIES IS ANTICIPATED. THE SPECIFIC MEANS FOR TREATMENT OF DISCHARGE SHALL BE PROVIDED BY THE CONTRACTOR. ALL COSTS FOR TREATMENT OF DISCHARGE SHALL BE PAID FOR UNDER CONTRACT ITEM 653.45.

### 1.4.12 INSPECT YOUR SITE
INSPECT THE PROJECT SITE BASED ON SPECIAL PROVISION REQUIREMENTS OR CONSTRUCTION GENERAL PERMIT AUTHORIZATION STIPULATIONS.

## 1.5 SEQUENCE AND STAGING

THIS SECTION WILL BE DEVELOPED BY THE CONTRACTOR USING THE GUIDANCE OUTLINED IN THE VTRANS EPSC PLAN CONTRACTOR CHECKLIST.

### 1.5.1 CONSTRUCTION SEQUENCE

### 1.5.2 OFF-SITE ACTIVITIES
IN ADDITION TO THE CONTRACTOR CHECKLIST ANY ACTIVITIES OUTSIDE THE CONSTRUCTION LIMITS SHALL FOLLOW SUBSECTIONS 105.25- 105.29 OF THE STANDARD SPECIFICATIONS FOR CONSTRUCTION.

### 1.5.3 UPDATES

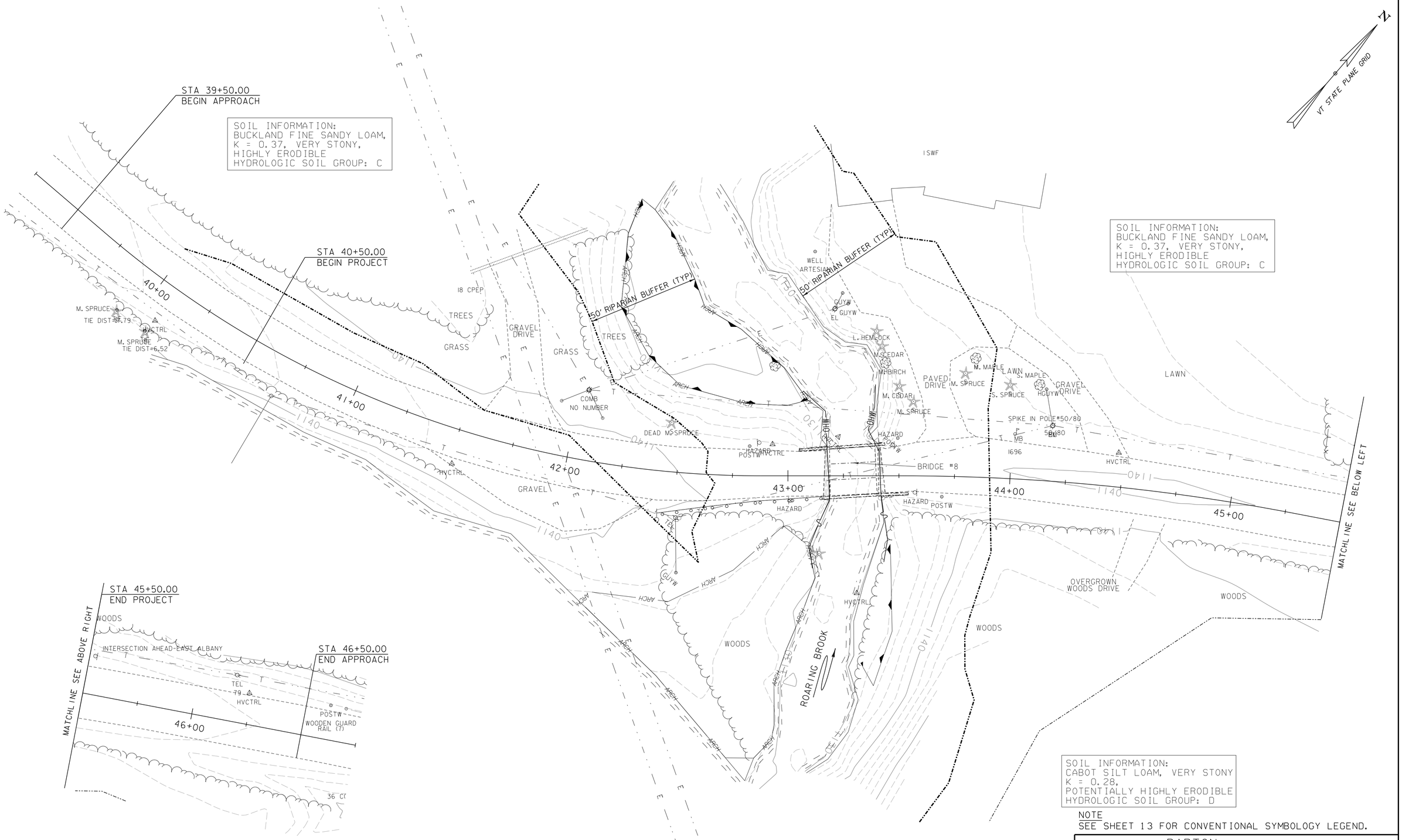


SOIL INFORMATION:
CABOT SILT LOAM, VERY STONY
K = 0.28,
POTENTIALLY HIGHLY ERODIBLE
HYDROLOGIC SOIL GROUP: D

NOTE
SEE SHEET 13 FOR CONVENTIONAL SYMBOLOGY LEGEND.

| | |
|---|---|
| PROJECT NAME: BARTON | |
| PROJECT NUMBER: BRO 1449(31) | |
| FILE NAME: 11J068/cos/z11J068bdreroex.dgn | PLOT DATE: 12/17/2014 |
| PROJECT LEADER: J. BYATT | DRAWN BY: M. HALEY |
| DESIGNED BY: M. HALEY | CHECKED BY: P. SHEDD |
| EPSC EXISTING PLAN SHEET | SHEET 48 OF 52 |

CONSULTING ENGINEERS

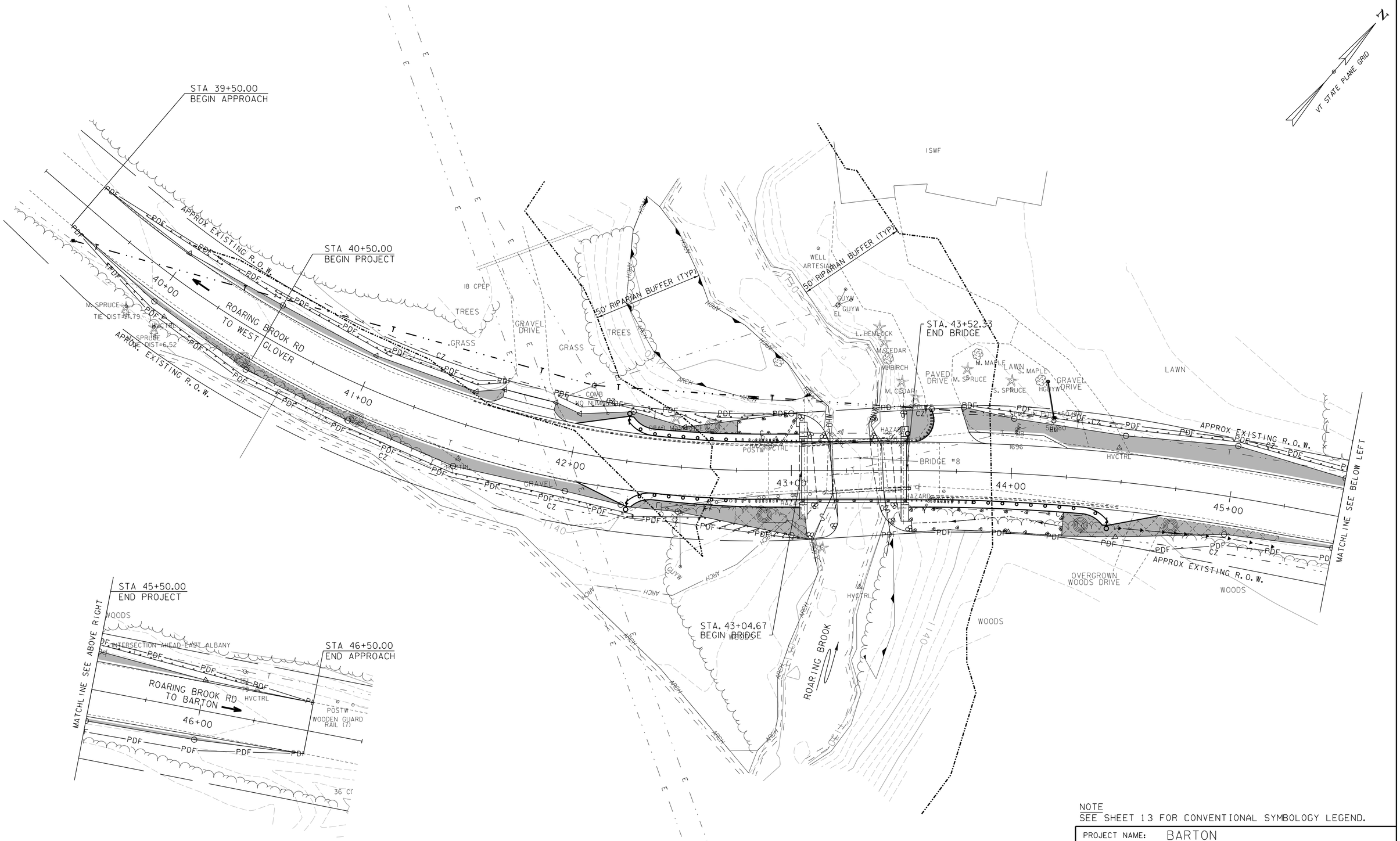


NOTE
SEE SHEET 13 FOR CONVENTIONAL SYMBOLOGY LEGEND.

| | |
|---|---|
| PROJECT NAME: BARTON | |
| PROJECT NUMBER: BRO 1449(31) | |
| FILE NAME: 11j068/cos/z11j068bdrerocn.dgn | PLOT DATE: 12/17/2014 |
| PROJECT LEADER: J. BYATT | DRAWN BY: M. HALEY |
| DESIGNED BY: M. HALEY | CHECKED BY: P. SHEDD |
| EPSC CONSTRUCTION PLAN SHEET | SHEET 49 OF 52 |

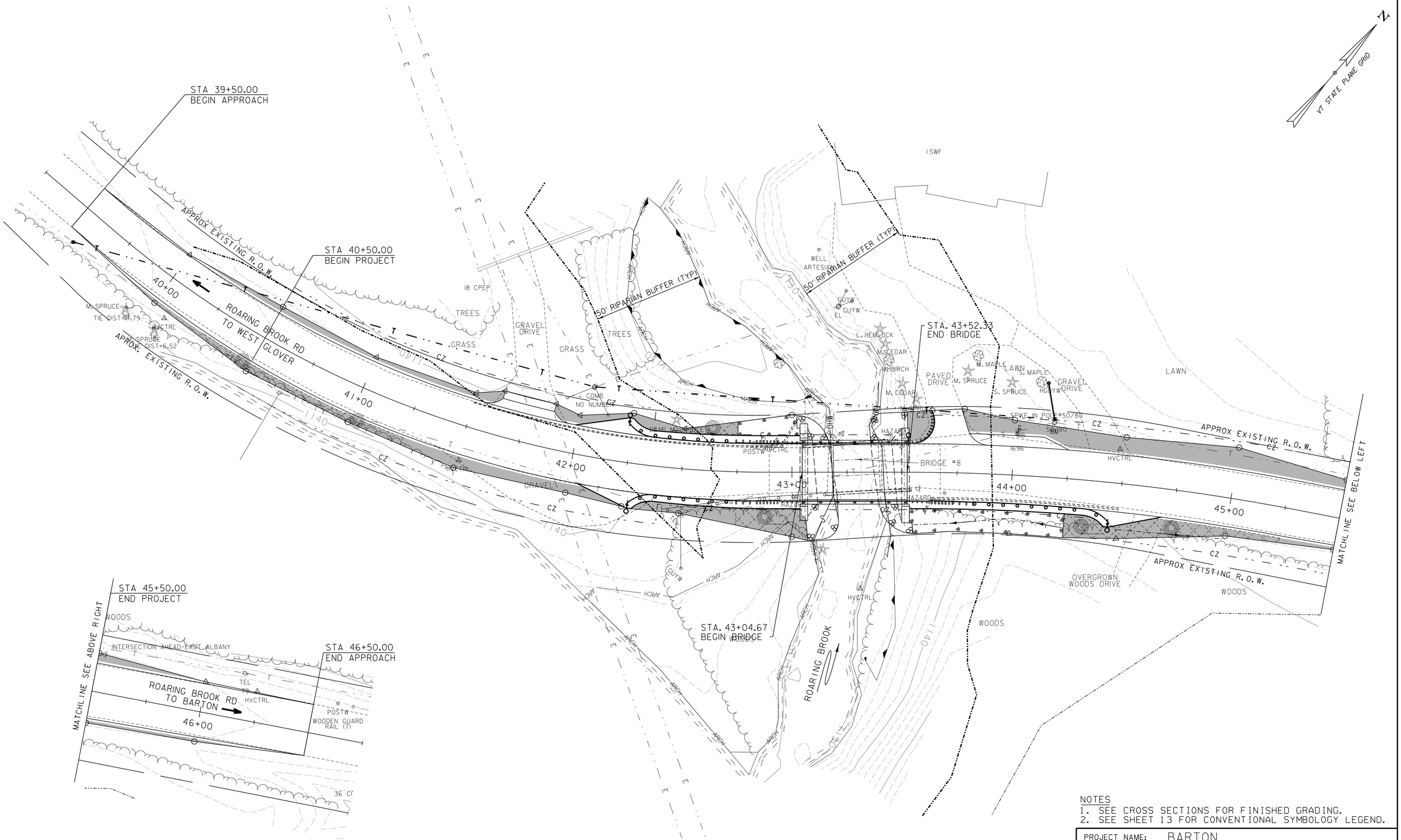


NOTES
1. SEE CROSS SECTIONS FOR FINISHED GRADING.
2. SEE SHEET 13 FOR CONVENTIONAL SYMBOLOGY LEGEND.

| | |
|---|---|
| PROJECT NAME: BARTON | |
| PROJECT NUMBER: BRO 1449(31) | |
| FILE NAME: 11j068/cos/z11j068bdrerofl.dgn | PLOT DATE: 12/17/2014 |
| PROJECT LEADER: J. BYATT | DRAWN BY: M. HALEY |
| DESIGNED BY: M. HALEY | CHECKED BY: P. SHEDD |
| EPSC FINAL PLAN SHEET | SHEET 50 OF 52 |

CONSULTING ENGINEERS

| VAOT RURAL AREA MIX | | | | | |
|---|---|---|---|---|---|
| | LBS/AC | | | | |
| % WEIGHT | BROADCAST | HYDROSEED | NAME | GERM % | PURITY % |
| 37.5% | 22.5 | 45 | CREEPING RED FESCUE | 85% | 98% |
| 37.5% | 22.5 | 45 | TALL FESCUE | 90% | 95% |
| 5.0% | 3 | 6 | RED TOP | 90% | 95% |
| 15.0% | 9 | 18 | BIRDSFOOT TREFOIL | 85% | 98% |
| 5.0% | 3 | 6 | ANNUAL RYE GRASS | 85% | 95% |
| 100% | 60 | 120 | | | |

| VAOT URBAN AREA MIX | | | | | |
|---|---|---|---|---|---|
| | LBS/AC | | | | |
| % WEIGHT | BROADCAST | HYDROSEED | NAME | GERM % | PURITY % |
| 42.5% | 34 | 68 | CREEPING RED FESCUE | 85% | 98% |
| 10.0% | 8 | 16 | PERENNIAL RYE GRASS | 90% | 95% |
| 42.5% | 34 | 68 | KENTUCKY BLUE GRASS | 85% | 85% |
| 5.0% | 4 | 8 | ANNUAL RYE GRASS | 85% | 95% |
| 100% | 80 | 160 | | | |

| SOIL AMENDMENT GUIDANCE | | | |
|---|---|---|---|
| FERTILIZER | | LIME | |
| BROADCAST | HYDROSEED | BROADCAST | HYDROSEED |
| 10-20-10 | *FOLLOW* | PELLETIZED | *FOLLOW* |
| 500 LBS/AC | *MANUFACTURER* | 2 TONS/AC | *MANUFACTURER* |

## CONSTRUCTION GUIDANCE

1. RURAL SEED MIX: USE AS INDICATED IN THE PLANS AND/OR FOR ALL ESTABLISHED UPLAND (NON WETLAND) AREAS DISTURBED BY THE CONTRACTOR.
2. URBAN SEED MIX: USE AS INDICATED IN THE PLANS AND/OR FOR ALL ESTABLISHED LAWN AREAS DISTURBED BY THE CONTRACTOR.
3. ALL SEED MIXTURES: SHALL NOT HAVE A WEED CONTENT EXCEEDING 0.40% BY WEIGHT AND SHALL BE FREE OF ALL NOXIOUS SEED.
4. FERTILIZER AND LIMESTONE: SHALL FOLLOW RATES SHOWN ON PLAN OR AS DIRECTED BY THE ENGINEER
5. HAY MULCH: TO BE PLACED ON EARTH SLOPES AT THE RATE OF 2 TONS/ACRE, ACHIEVE 90% GROUND COVER OR AS DIRECTED BY THE ENGINEER.
6. TOPSOIL: TO BE USED WITH SEED AS INDICATED ON THE PLANS, OR AS DIRECTED BY THE ENGINEER.
7. HYDROSEEDING: ALTHOUGH GUIDANCE IS GIVEN ABOVE THE SITE CONDITIONS AND THE TYPE OF HYDROSEED WILL ULTIMATELY DICTATE THE AMOUNTS AND TYPES OF SOIL AMENDMENTS TO BE APPLIED
8. TURF ESTABLISHMENT: PLACING SEED, FERTILIZER, LIME AND MULCH PRIOR TO SEPTEMBER 15 AND AFTER APRIL 15 CAN BETTER ENSURE A VIGOROUS GROWTH OF GRASS.

ADAPTED FROM VTRANS TECHNICAL LANDSCAPE MANUAL FOR ROADWAYS AND TRANSPORTATION FACILITIES

# TURF ESTABLISHMENT

| REVISIONS | |
|---|---|
| JUNE 23, 2009 | WHF |
| JANUARY 15, 2010 | WHF |
| FEBRUARY 16, 2011 | WHF |

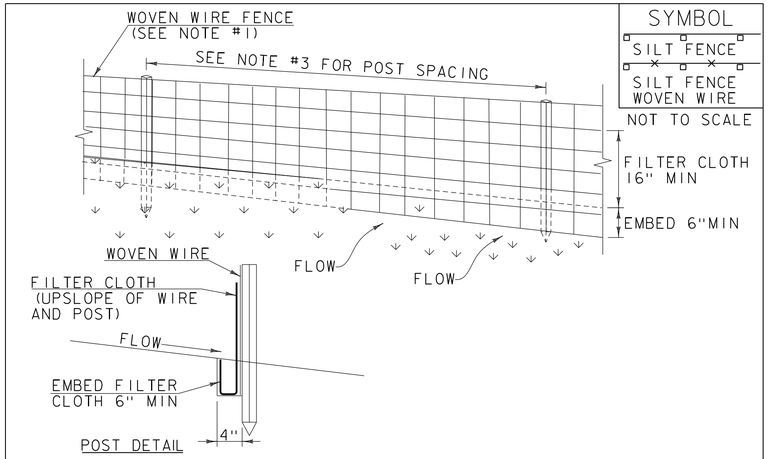


## CONSTRUCTION SPECIFICATIONS

1. WOVEN WIRE REINFORCED FENCE IS REQUIRED WITHIN 100' UPSLOPE OF RECEIVING WATERS WHEN THE PROJECT FALLS UNDER A CONSTRUCTION STORMWATER PERMIT. WOVEN WIRE SHALL BE A MIN. 14 GAUGE WITH A 6" MAX. MESH OPENING.
2. FILTER CLOTH SHALL BE EITHER FILTER X, MIRAFI100X, STABILINKA T140N OR APPROVED EQUIVALENT.
3. POST SPACING FOR WIRE-BACKED FENCE SHALL BE 10' MAXIMUM. FOR FILTER-CLOTH FENCE, WHEN ELONGATION IS >50%, POST SPACING SHALL NOT EXCEED 4' AND WHEN ELONGATION IS <50%, POST SPACING SHALL NOT EXCEED 6'.
4. WOVEN WIRE FENCE IS TO BE FASTENED SECURELY TO FENCE POSTS WITH WIRE TIES. FILTER CLOTH IS TO BE FASTENED SECURELY TO WOVEN WIRE FENCE WITH TIES SPACED EVERY 24" AT TOP AND MID SECTION.
5. WHEN TWO SECTIONS OF FILTER CLOTH ADJOIN EACH OTHER THEY SHALL BE OVER-LAPPED BY 6" AND FOLDED.
6. MAINTENANCE SHALL BE PERFORMED AS NEEDED AND MATERIAL REMOVED WHEN SEDIMENT REACHES HALF OF FABRIC HEIGHT.

ADAPTED FROM DETAILS PROVIDED BY: NEW YORK STATE DEC
ORIGINALLY DEVELOPED BY USDA-NRCS
VERMONT DEPARTMENT OF ENVIRONMENTAL CONSERVATION

# SILT FENCE

NOTES:
REFER TO "THE VERMONT STANDARDS & SPECIFICATIONS FOR EROSION PREVENTION & SEDIMENT CONTROL -2006- "FROM THE VT AGENCY OF NATURAL RESOURCES FOR ADDITIONAL GUIDANCE.

THIS WORK SHALL BE PERFORMED IN ACCORDANCE WITH SECTION 649 AND AS SHOWN IN THE PLANS FOR GEOTEXTILE FOR SILT FENCE (PAY ITEM 649.51) ~~OR GEOTEXTILE FOR SILT FENCE, WOVEN WIRE REINFORCED (PAY ITEM 649.515).~~

| REVISIONS | |
|---|---|
| MARCH 21, 2008 | WHF |
| DECEMBER 11, 2008 | WHF |
| JANUARY 13, 2009 | WHF |

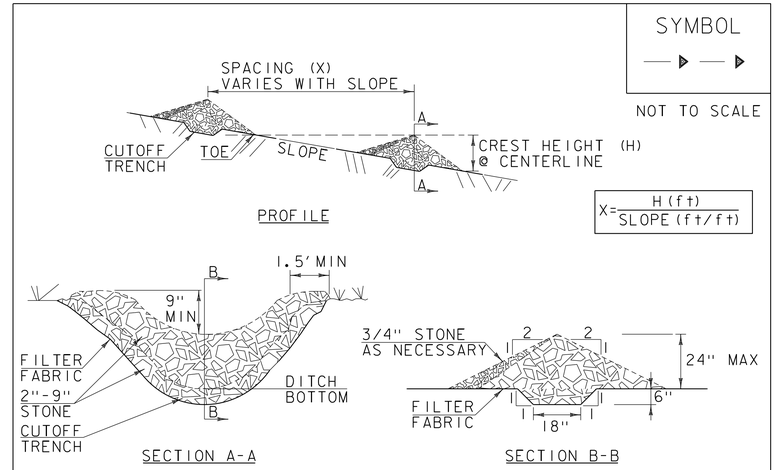


## CONSTRUCTION SPECIFICATIONS

1. STONE WILL BE PLACED ON A FILTER FABRIC FOUNDATION.
2. CHECK DAMS SHALL BE SPACED SO THAT THE ELEVATION OF THE CREST OF THE DOWNSTREAM DAM IS AT THE SAME ELEVATION AS THE TOE OF THE UPSTREAM DAM.
3. 3/4" FILTERING STONE MAY BE ADDED TO THE FACE OF THE CHECK DAM AS NECESSARY.
4. EXTEND THE STONE A MINIMUM OF 1.5' BEYOND THE DITCH BANKS TO PREVENT CUTTING AROUND THE DAM.
5. PROTECT CHANNEL DOWNSTREAM OF THE LOWEST CHECK DAM FROM SCOUR AND EROSION WITH STONE OR LINER AS APPROPRIATE.
6. ENSURE THAT CHANNEL APPURTENANCES SUCH AS CULVERT ENTRANCES BELOW CHECK DAMS ARE NOT SUBJECT TO DAMAGE OR BLOCKAGE FROM DISPLACED STONE.
7. MAXIMUM DRAINAGE AREA 2 ACRES.

ADAPTED FROM DETAILS PROVIDED BY: NEW YORK STATE DEC
ORIGINALLY DEVELOPED BY USDA-NRCS
VERMONT DEPARTMENT OF ENVIRONMENTAL CONSERVATION

# CHECK DAM

NOTES:
REFER TO "THE VERMONT STANDARDS & SPECIFICATIONS FOR EROSION PREVENTION & SEDIMENT CONTROL -2006- "FROM THE VT AGENCY OF NATURAL RESOURCES FOR ADDITIONAL GUIDANCE.

THIS WORK SHALL BE PERFORMED IN ACCORDANCE WITH SECTION 653 FOR TEMPORARY STONE CHECK DAM, TYPE I (PAY ITEM 653.25)

| REVISIONS | |
|---|---|
| MARCH 21, 2008 | WHF |
| JANUARY 8, 2009 | WHF |

CLD 12-0174 MODEL: EC02

PROJECT NAME: BARTON
PROJECT NUMBER: BRO 1449(31)

CONSULTING ENGINEERS

FILE NAME: 11j068/cos/z11j068erodet.dgn
PROJECT LEADER: J. BYATT
DESIGNED BY: M. HALEY
EPSC DETAILS 1

PLOT DATE: 12/17/2014
DRAWN BY: M. HALEY
CHECKED BY: P. SHEDD
SHEET 51 OF 52

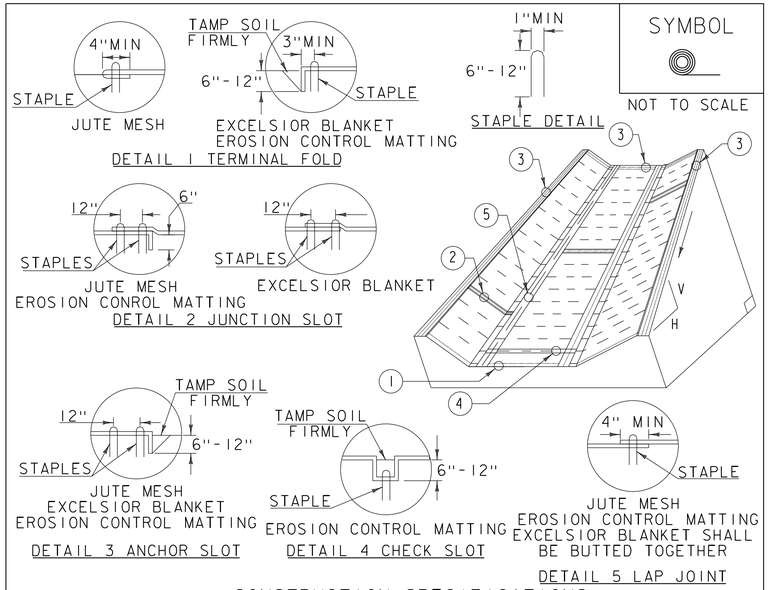


## CONSTRUCTION SPECIFICATIONS

1. EROSION MATTING, CHECK SLOTS, SHALL BE SPACED IN DITCH CHANNEL SO THAT ONE OCCURS WITHIN EACH 50' ON SLOPES OF MORE THAN 4% AND LESS THAN 6%. ON SLOPES OF 6% OR MORE, THEY SHALL BE SPACED SO THAT ONE OCCURS WITHIN EACH 25'.
2. APPLY FERTILIZER, LIME SEED PRIOR TO PLACING MATTING.
3. STAPLES ARE TO BE PLACED ALTERNATELY, IN COLUMNS APPROXIMATELY 2' APART AND IN ROWS APPROXIMATELY 3' APART. APPROXIMATELY 175 STAPLES ARE REQUIRED PER 4'X225' ROLL OF MATERIAL AND 125 STAPLES ARE REQUIRED PER 4'X150' ROLL OF MATERIAL.
4. DISTURBED AREAS SHALL BE SMOOTHLY GRADED. EROSION CONTROL MATERIAL SHALL BE PLACED LOOSELY OVER GROUND SURFACE. DO NOT STRETCH.
5. ALL TERMINAL ENDS AND TRANSVERSE LAPS SHALL BE STAPLED AT APPROXIMATELY 12" INTERVALS.

ADAPTED FROM DETAILS PROVIDED BY: NEW YORK STATE DEC
ORIGINALLY DEVELOPED BY USDA-NRCS
VERMONT DEPARTMENT OF ENVIRONMENTAL CONSERVATION

**ROLLED EROSION CONTROL PRODUCT (RECP) DITCH**

NOTES:
REFER TO "THE VERMONT STANDARDS & SPECIFICATIONS FOR EROSION PREVENTION & SEDIMENT CONTROL -2006- "FROM THE VT AGENCY OF NATURAL RESOURCES FOR ADDITIONAL GUIDANCE.
THIS WORK SHALL BE PERFORMED IN ACCORDANCE WITH SECTION 653 AND AS SHOWN IN THE PLANS FOR TEMPORARY EROSION MATTING (PAY ITEM 653.20).

| REVISIONS | |
|---|---|
| MARCH 8, 2007 | JMF |
| APRIL 16, 2007 | WHF |
| JANUARY 13, 2009 | WHF |

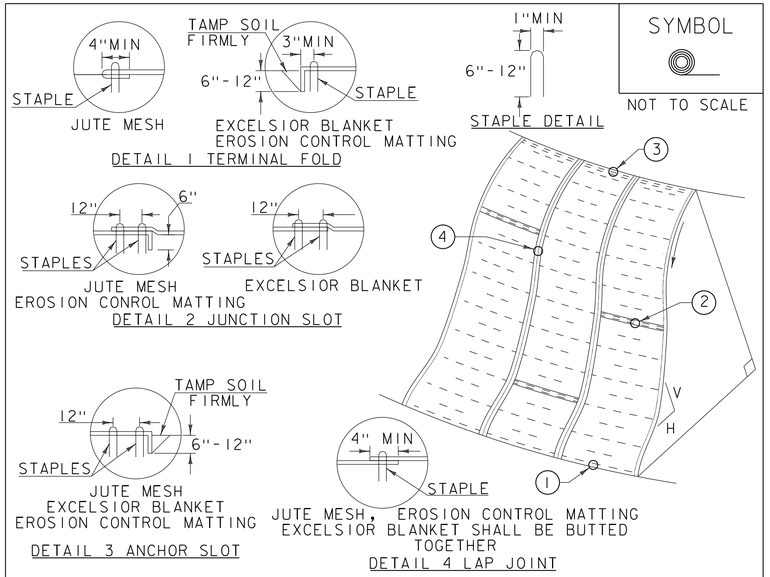


## CONSTRUCTION SPECIFICATIONS

1. APPLY TO SLOPES GREATER THAN 3H:1V OR WHERE NECESSARY TO AID IN ESTABLISHING VEGETATION.
2. APPLY FERTILIZER, LIME SEED PRIOR TO PLACING MATTING.
3. STAPLES ARE TO BE PLACED ALTERNATELY, IN COLUMNS APPROXIMATELY 2' APART AND IN ROWS APPROXIMATELY 3' APART. APPROXIMATELY 175 STAPLES ARE REQUIRED PER 4'X225' ROLL OF MATERIAL AND 125 STAPLES ARE REQUIRED PER 4'X150' ROLL OF MATERIAL.
4. DISTURBED AREAS SHALL BE SMOOTHLY GRADED. EROSION CONTROL MATERIAL SHALL BE PLACED LOOSELY OVER GROUND SURFACE. DO NOT STRETCH.
5. ALL TERMINAL ENDS AND TRANSVERSE LAPS SHALL BE STAPLED AT APPROXIMATELY 12" INTERVALS.

ADAPTED FROM DETAILS PROVIDED BY: NEW YORK STATE DEC
ORIGINALLY DEVELOPED BY USDA-NRCS
VERMONT DEPARTMENT OF ENVIRONMENTAL CONSERVATION

**ROLLED EROSION CONTROL PRODUCT (RECP) SIDE SLOPE**

NOTES:
REFER TO "THE VERMONT STANDARDS & SPECIFICATIONS FOR EROSION PREVENTION & SEDIMENT CONTROL -2006- "FROM THE VT AGENCY OF NATURAL RESOURCES FOR ADDITIONAL GUIDANCE.
THIS WORK SHALL BE PERFORMED IN ACCORDANCE WITH SECTION 653 AND AS SHOWN IN THE PLANS FOR TEMPORARY EROSION MATTING (PAY ITEM 653.20) ~~OR PERMANENT EROSION MATTING (PAY ITEM 653.21).~~

| REVISIONS | |
|---|---|
| APRIL 16, 2007 | JMF |
| JANUARY 13, 2009 | WHF |

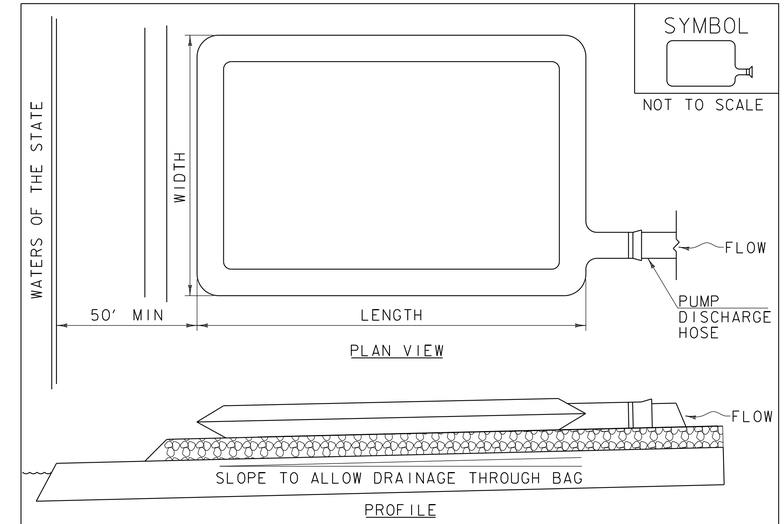


## CONSTRUCTION SPECIFICATIONS

1. THE PRIMARY PURPOSE OF FILTER BAG IS TO RETAIN SILT, SAND, AND FINES DURING DEWATERING OPERATIONS.
2. FILTER BAGS SHALL BE INSTALLED ON A VEGETATED SLOPE GRADED TO ALLOW INCOMING WATER TO FLOW THROUGH THE BAG.
3. FILTER BAGS MAY ALSO BE PLACED ON COARSE AGGREGATE, STONE, OR HAYBALES TO INCREASE FILTRATION EFFICIENCY.
4. FILTER BAGS SHALL BE LOCATED A MINIMUM OF 50' FROM WATERS OF THE STATE UNLESS OTHERWISE APPROVED BY THE ENGINEER.
5. THE NECK OF THE FILTER BAG SHALL BE STRAPPED TIGHTLY TO THE DISCHARGE HOSE.
6. A FILTER BAG IS FULL WHEN IT NO LONGER CAN EFFICIENTLY FILTER SEDIMENT OR ALLOW WATER TO PASS AT A REASONABLE RATE.
7. FILTER BAG SHALL BE DISPOSED OF AS APPROVED IN THE EPSC PLAN OR AS DIRECTED BY THE ENGINEER.

**FILTER BAG**

NOTES:
REFER TO "THE VERMONT STANDARDS & SPECIFICATIONS FOR EROSION PREVENTION & SEDIMENT CONTROL -2006- "FROM THE VT AGENCY OF NATURAL RESOURCES FOR ADDITIONAL GUIDANCE.

THIS WORK SHALL BE PERFORMED IN ACCORDANCE WITH SECTION 653 FOR FILTER BAG (PAY ITEM 653.45) AND AS SPECIFIED IN THE CONTRACT.

| REVISIONS | |
|---|---|
| MARCH 24, 2008 | WHF |
| JANUARY 13, 2009 | WHF |

CLD 12-0174 MODEL: EC03

CONSULTING ENGINEERS

PROJECT NAME: BARTON
PROJECT NUMBER: BRO 1449(31)

FILE NAME: 11j068/cos/z11j068erodet.dgn
PROJECT LEADER: J. BYATT
DESIGNED BY: M. HALEY
EPSC DETAILS 2

PLOT DATE: 12/17/2014
DRAWN BY: M. HALEY
CHECKED BY: P. SHEDD
SHEET 52 OF 52

## CONCRETE GENERAL NOTES

1. ALL EXPOSED EDGES OF CONCRETE SHALL BE CHAMFERED 1" x 1"
2. REINFORCING STEEL SIZE AND SPACING SHOWN IN THE PLANS IS BASED ON 60 KSI STEEL, UNLESS NOTED OTHERWISE. WITH THE ENGINEER'S PERMISSION, BAR SIZE AND SPACING MAY BE MODIFIED ACCORDING TO THE LATEST AASHTO LRFD BRIDGE DESIGN SPECIFICATION AND STRUCTURES DESIGN MANUAL WHEN USING HIGHER STRENGTH STEEL.

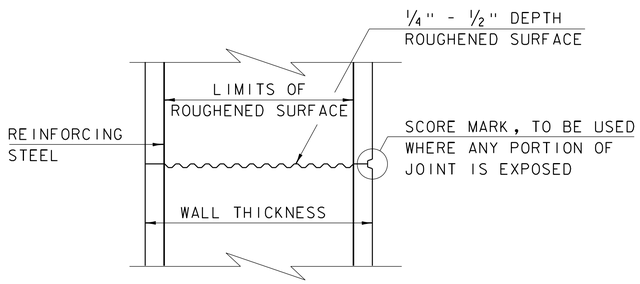


## TYPICAL HORIZONTAL CONSTRUCTION JOINT

(NOT TO SCALE)

1. THE SURFACE OF THE CONCRETE CONSTRUCTION JOINTS SHALL BE CLEANED AND FREE OF LAITANCE.
2. IMMEDIATELY BEFORE NEW CONCRETE IS PLACED, ALL CONSTRUCTION JOINTS SHALL BE WETTED AND STANDING WATER REMOVED.

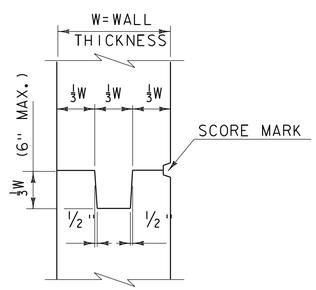


## TYPICAL CONCRETE CONSTRUCTION JOINT

(NOT TO SCALE)

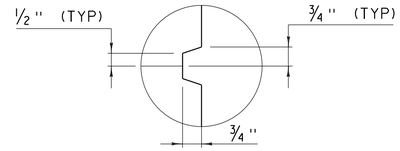


## SCORE MARK DETAIL

(NOT TO SCALE)

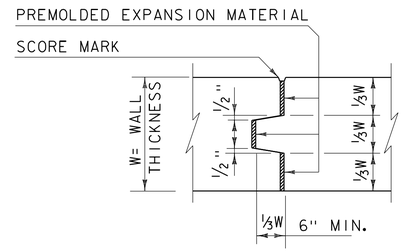


## TYPICAL CONCRETE EXPANSION JOINT

(NOT TO SCALE)

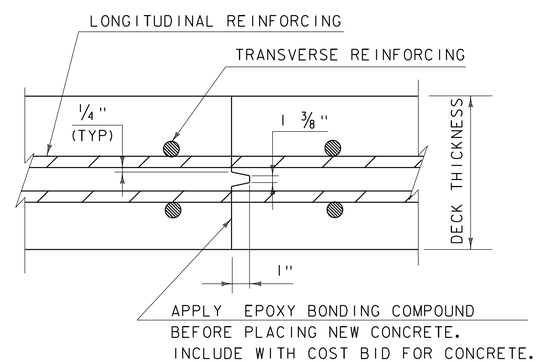


## TRANSVERSE BRIDGE SLAB CONSTRUCTION JOINT DETAILS

(NOT TO SCALE)

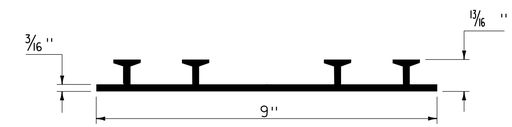


## P.V.C. WATERSTOP FOR CONSTRUCTION JOINTS

(NOT TO SCALE)

PAYMENT FOR THE P.V.C. WATERSTOP SHALL BE INCIDENTAL TO THE UNIT BID PRICE FOR THE ADJACENT CONCRETE.

OTHER CONFIGURATIONS OF WATERSTOP MAY BE USED UPON APPROVAL OF THE ENGINEER.

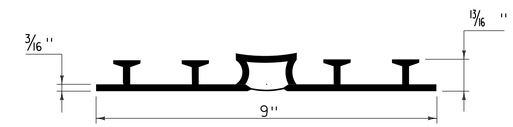


## P.V.C. WATERSTOP FOR EXPANSION JOINTS

(NOT TO SCALE)

PAYMENT FOR THE P.V.C. WATERSTOP SHALL BE INCIDENTAL TO THE UNIT BID PRICE FOR THE ADJACENT CONCRETE.

OTHER CONFIGURATIONS OF WATERSTOP MAY BE USED UPON APPROVAL OF THE ENGINEER.

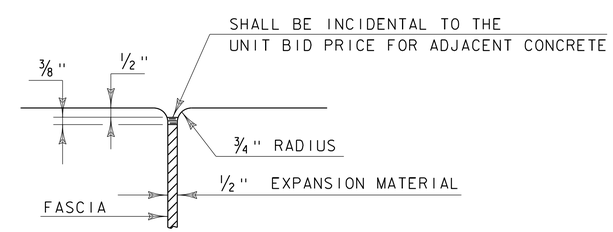


## JOINT BETWEEN FASCIA AND WINGWALL

(NOT TO SCALE)

| REVISIONS | |
|---|---|
| MAY 7, 2010 | APPROVED FOR USE BY VAOT STRUCTURES SECTION |
| FEBRUARY 9, 2012 | REBAR SUBSTITUTION ALLOWANCE ADDED TO CONCRETE GENERAL NOTES. |
| | |
| | |
| | |
| | |
| | |
| | |

# CONCRETE DETAILS AND NOTES

VERMONT AGENCY OF TRANSPORTATION
STRUCTURES SECTION

STRUCTURES DETAIL

SD-501.00

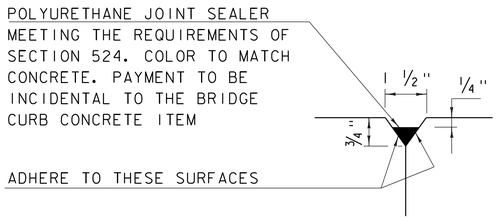


DETAIL "B"
(NOT TO SCALE)

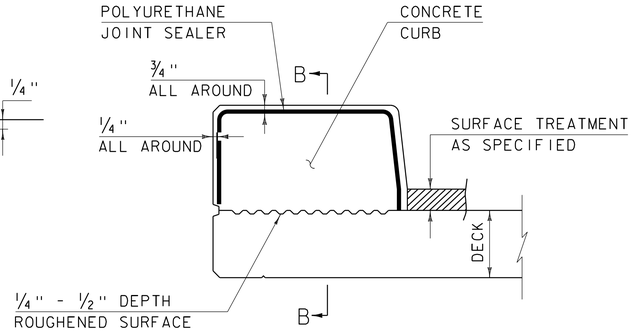


CONCRETE CURB JOINT SECTION
(NOT TO SCALE)

1. SEE TYPICAL HORIZONTAL CONSTRUCTION JOINT DETAIL FOR ADDITIONAL INFORMATION

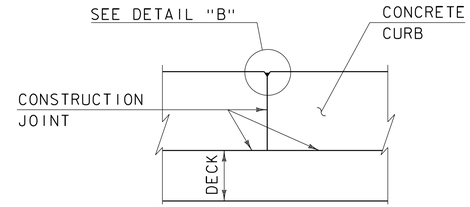


SECTION B - B
(NOT TO SCALE)

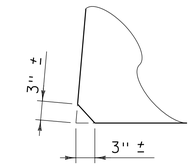


ACUTE ANGLE CLIP DETAIL
(NOT TO SCALE)

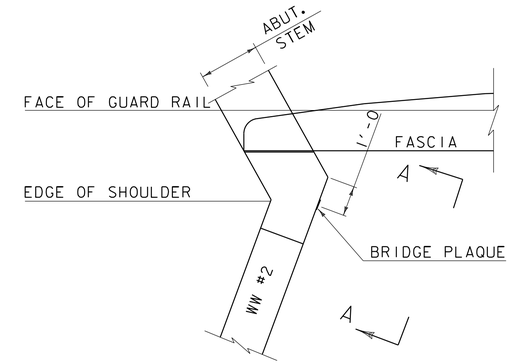


PLAN

## CONCRETE CURB JOINT NOTES

1. CONCRETE CURBS MAY BE PLACED IN ONE CONTINUOUS OPERATION IF AN APPROVED SHRINKAGE REDUCING ADMIXTURE LISTED IN THE SPECIAL PROVISIONS IS USED WITH THE CONCRETE MIX DESIGN. PAYMENT FOR THE SHRINKAGE REDUCING ADMIXTURE WILL BE INCIDENTAL TO THE BRIDGE CURB CONCRETE ITEM.

2. IF THE CONTRACTOR CHOOSES NOT TO USE AN APPROVED SHRINKAGE REDUCING ADMIXTURE, THE CURBS SHALL BE CONSTRUCTED WITH CONSTRUCTION JOINTS SPACED AT A MAXIMUM OF 15'-0" CENTER TO CENTER AND 2'-0" MINIMUM FROM THE CENTER OF NEAREST BRIDGE RAILING POST.

3. ON MULTI-SPAN CONTINUOUS SUPERSTRUCTURES, REGARDLESS OF WHETHER APPROVED SHRINKAGE REDUCING ADMIXTURE IS USED, CURB JOINTS SHALL BE LOCATED OVER THE CENTERLINE OF PIERS AND 7'-0" EACH SIDE OF THE CENTERLINE OF EACH PIER.

4. WHEN CURB JOINTS ARE USED THE CURBS SHALL BE PLACED IN ALTERNATE SECTIONS WITH A MINIMUM OF 48 HOUR DELAY BETWEEN ADJACENT PLACEMENTS.

5. LONGITUDINAL REINFORCING SHALL BE CONTINUOUS THROUGH CURB CONSTRUCTION JOINTS. CURB STIRRUP BARS SHALL BE TURNED AS NECESSARY TO MAINTAIN COVER IN THE FLARED CURB ENDS.

6. THE JOINT SPACING AND DETAILS SHOWN SHALL APPLY TO SIDEWALKS WHEN SHOWN IN THE PLANS.

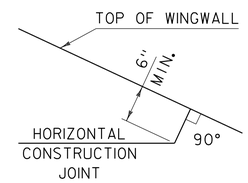


HORIZONTAL WINGWALL CONSTRUCTION JOINT
(NOT TO SCALE)

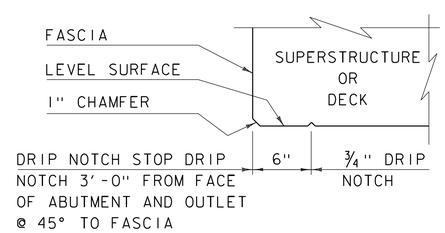


DRIP NOTCH DETAIL
(NOT TO SCALE)

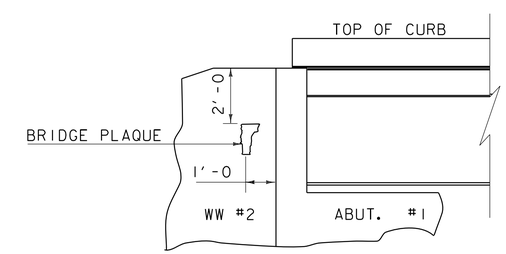


VIEW "A - A"

BRIDGE PLAQUE
(NOT TO SCALE)

THE BRIDGE PLAQUE WILL BE SUPPLIED BY THE AGENCY OF TRANSPORTATION AND SHALL BE INSTALLED BY THE CONTRACTOR AT ABUTMENT #1 ON THE RIGHT SIDE AS SHOWN OR AS DIRECTED BY THE ENGINEER.

PAYMENT FOR INSTALLATION OF THE BRIDGE PLAQUE SHALL BE INCIDENTAL TO THE ADJACENT CONCRETE.

REVISIONS

| | |
|---|---|
| MAY 7, 2010 | APPROVED FOR USE BY VAOT STRUCTURES SECTION |
| JUNE 4, 2010 | MODIFIED AND ADDED TWO DETAILS |
| OCTOBER 10, 2012 | MODIFIED HORZ. JOINT WINGWALL ADD 6" MIN. DIMENSION |
| | |
| | |
| | |
| | |
| | |

# CONCRETE DETAILS AND NOTES

VERMONT AGENCY OF TRANSPORTATION
STRUCTURES - SECTION

STRUCTURES DETAIL
SD-502.00

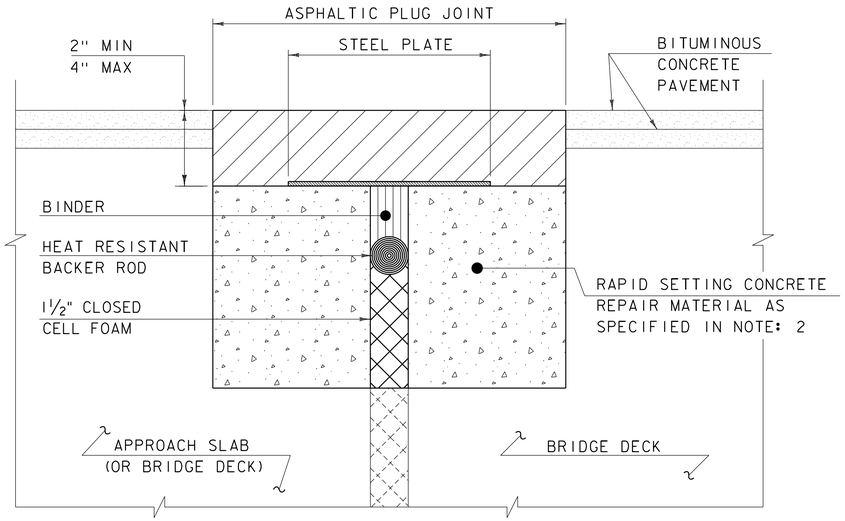


## ASPHALTIC PLUG JOINT DETAIL - REHAB

NOTES:

1. THE CONTRACTOR SHALL REMOVE ALL ASPHALTIC PLUG JOINT MATERIAL AND DETERIORATED CONCRETE AS DIRECTED BY THE ENGINEER. REMOVAL OF THE FIRST 4 INCHES OF MATERIAL SHALL BE INCLUDED IN THE BID PRICE FOR ITEM 516.10 BRIDGE EXPANSION JOINT, ASPHALTIC PLUG. ANY REMOVAL OF MATERIAL GREATER THAN 4 INCHES SHALL BE INCLUDED IN THE BID PRICE OF ITEM 580.20 RAPID SETTING CONCRETE REPAIR MATERIAL WITH COARSE AGGREGATE.

2. THE CONTRACTOR SHALL REPLACE REMOVED MATERIAL THAT IS LESS THAN 4" FROM FINISHED GRADE WITH ASPHALTIC PLUG JOINT MATERIAL MEETING THE REQUIREMENTS OF SUBSECTION 707.15. ALL REMOVED MATERIAL THAT IS GREATER THAN 4 INCHES FROM FINISHED GRADE SHALL BE REPLACED WITH RAPID SETTING CONCRETE REPAIR MATERIAL WITH COARSE AGGREGATE MEETING THE REQUIREMENTS OF SUBSECTION 780.04.

3. REINFORCING STEEL NOT SHOWN FOR CLARITY.

4. PLACE 1/4" THICK BY 8" WIDE SECTIONS OF STEEL PLATE OVER THE CENTER OF THE MOVEMENT GAP. SECURE THE PLATES FROM MOVING BY INSERTING LOCATING PINS THROUGH THE PRE-STAMPED HOLES INTO BACKER ROD AND COVER WITH HOT BINDER. THE STEEL PLATES MAY BE OMITTED WHERE THE ENGINEER DETERMINES THAT THE APPROACH SLAB OR BRIDGE DECK WILL PROVIDE INADEQUATE SUPPORT AND WHERE VERTICAL MOVEMENT OF THE PLATES MIGHT OCCUR.

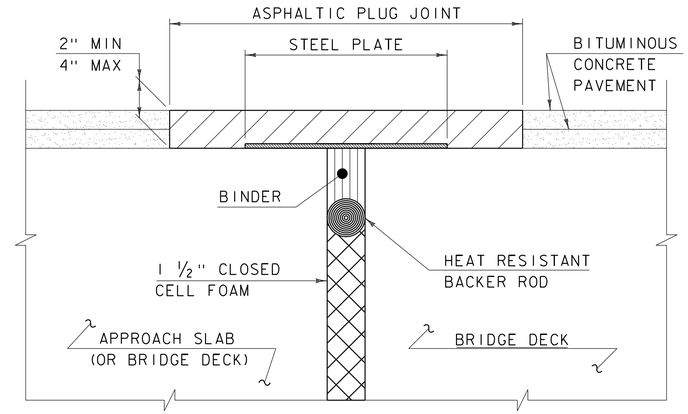


## ASPHALTIC PLUG JOINT DETAIL "A" - NEW

NOTE:
PLACE 1/4" THICK BY 8" WIDE SECTIONS OF STEEL PLATE OVER THE CENTER OF THE MOVEMENT GAP. SECURE THE PLATES FROM MOVING BY INSERTING LOCATING PINS THROUGH THE PRE-STAMPED HOLES INTO BACKER ROD AND COVER WITH HOT BINDER.

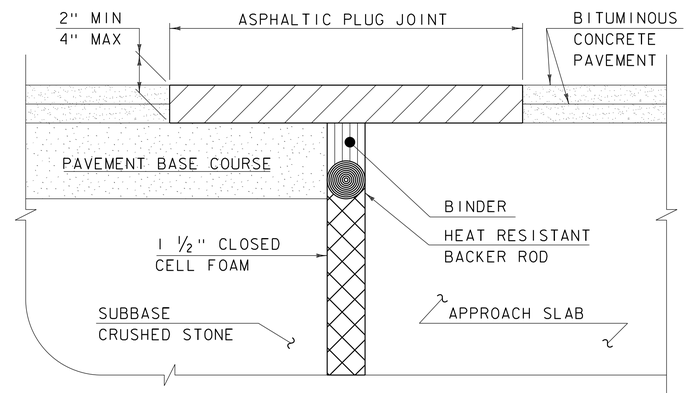


## ASPHALTIC PLUG JOINT DETAIL "B" - NEW

## ASPHALTIC PLUG JOINT NOTES

INSTALLATION:

1. LOCATE THE JOINT CENTRALLY OVER THE DECK OVERLAY EXPANSION GAP OR FIXED JOINT, MARKED OUT TO THE MANUFACTURER'S RECOMMENDED WIDTH.

2. REMOVE THE BITUMINOUS CONCRETE PAVEMENT FULL DEPTH AS SHOWN ON THE PLANS. THE PAVEMENT SHALL BE DRY AND SAW CUT TO THE LIMITS REQUIRED TO PLACE THE JOINT. A PNEUMATIC HAMMER AND CHISEL MAY BE USED ADJACENT TO THE CURB ONLY WHEN SAW CUTTING IS NOT POSSIBLE.

3. BLAST CLEAN THE JOINT AREA OF DEBRIS, ASPHALT AND SHEET MEMBRANE. THOROUGHLY DRY THE JOINT AREA WITH COMPRESSED AIR PRIOR TO APPLYING BINDER MATERIAL.

4. PLACE PROPERLY SIZED HEAT RESISTANT BACKER ROD IN THE MOVEMENT GAP ALLOWING FOR 1" +/- OF BINDER ABOVE THE ROD.

5. HEAT AND PLACE THE BINDER MATERIAL AS RECOMMENDED BY THE MANUFACTURER.

6. IMMEDIATELY AFTER TOP COATING, CAST AN ANTI-SKID MATERIAL OVER THE JOINT TO REDUCE THE RISK OF TRACKING.

WEATHER LIMITATIONS

APPLY BINDER MATERIAL ONLY WHEN THE FOLLOWING CONDITIONS PREVAIL OR AS RECOMMENDED BY THE MANUFACTURER:

1. THE AMBIENT AIR TEMPERATURE IS AT LEAST 10 DEG C (50 DEG F) AND RISING.

2. THE ROAD SURFACE IS DRY.

3. WEATHER CONDITIONS OR OTHER CONDITIONS ARE FAVORABLE AND ARE EXPECTED TO REMAIN SO FOR THE PERFORMANCE OF SATISFACTORY WORK.

DETAILS ON THIS SHEET ARE NOT TO SCALE.

| REVISIONS | |
|---|---|
| MAY 7, 2010 | APPROVED FOR USE BY VAOT STRUCTURES SECTION |
| AUGUST 29, 2011 | ADD DETAIL "B" AND REV. NOTES |
| | |
| | |
| | |
| | |
| | |
| | |

# BRIDGE JOINT
# ASPHALTIC PLUG

VERMONT AGENCY OF TRANSPORTATION
STRUCTURES - DIVISION

STRUCTURES DETAIL

SD-516.10

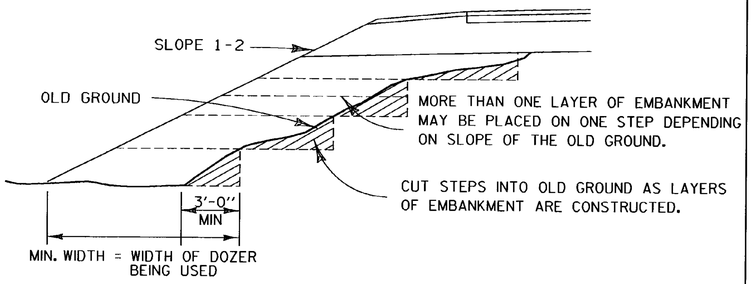


## METHOD FOR CONSTRUCTING AN EMBANKMENT ON EARTH SLOPE

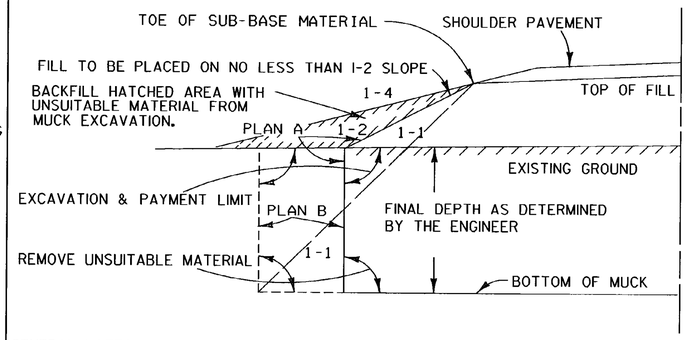


GENERAL NOTES :

THE MUCK OR UNSUITABLE MATERIAL SHALL BE EXCAVATED TO THE NEAT LINES SHOWN ON THE PLANS OR AS DETERMINED BY THE ENGINEER.

EXCAVATION AND PAYMENT LIMIT WILL BE DETERMINED FROM EITHER PLAN "A" OR PLAN "B", WHICHEVER PRODUCES THE GREATER WIDTH IN A GIVEN MUCK AREA.

BACKFILL MATERIAL MUST MEET THE REQUIREMENTS SET FORTH UNDER MUCK EXCAVATION,SECTION 203

## TYPICAL NEAT PAY LINES FOR MUCK EXCAVATION

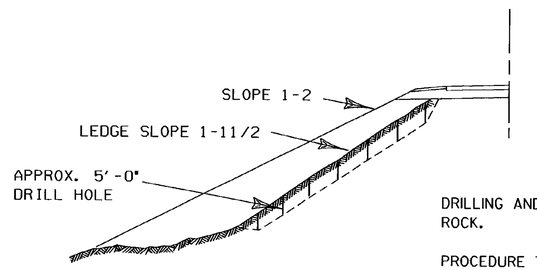


DRILL PATTERN

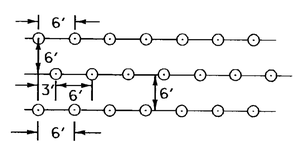


DRILLING AND BLASTING OF SOLID ROCK.

PROCEDURE TO BE FOLLOWED WHEN LEDGE SLOPE ON OLD GROUND IS BETWEEN A 1-1 AND A 1-5 SLOPE.

ALL HOLES TO BE APPROXIMATELY 5'-0" DEEP. HOLES TO BE IN ROWS, SPACED AND STAGGERED AS SHOWN IN DRILL PATTERN, OR AS DIRECTED BY THE ENGINEER. SEE SECTION 205

## A METHOD FOR PREPARING LEDGE SLOPE BEFORE CONSTRUCTING AN EMBANKMENT

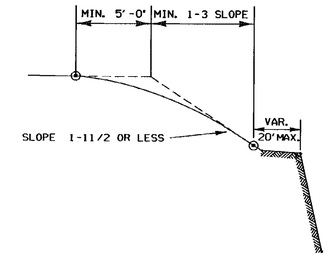


EARTH SECTIONS ABOVE STABLE ROCK OR EQUIVILENT OUTCROPS TO BE ROUNDED, AS FAR AS POSSIBLE AS THOUGH TOTAL HEIGHT OF SLOPE WAS IN EARTH CUT.

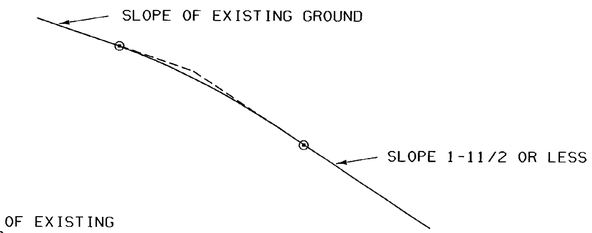


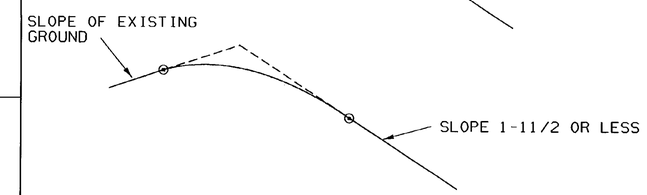


SLOPES TO BE ROUNDED AS SHOWN IN ORDER TO ALLOW FOR PERSPECTIVE FORESHORTENING AS SEEN FROM THE ROAD AND SO THAT FINISHED SLOPES WILL BETTER SUPPORT VEGETATIVE COVER.

ROUNDING TO MERGE WITH EXISTING GROUND SURFACE SO THAT NO HARD GRADE LINE WILL REMAIN WITHIN THE LINE OF SIGHT

WHEN STEEPNESS OF EXISTING GROUND OR PRESENCE OF EXISTING VEGETATION IS CONSIDERED A FACTOR PREVENTING NORMAL ROUNDING, THE EXTENT OF THE ROUNDING SHOULD BE MODIFIED TO MEET CONDITIONS.

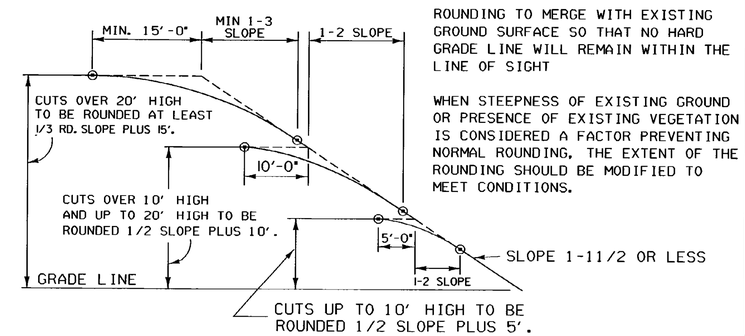


## TYPICAL SLOPE ROUNDING

REVISIONS AND CORRECTIONS

DEC. 6, 1971 - ORIGINAL APPROVAL DATE

JUNE 1, 1994 - REISSUED, WITHOUT CHANGE, UNDER NEW SIGNATURES.

APPROVED

APPROVED FOR THIS PROJECT AND/OR DESIGN IMPLEMENTATION. FHWA FINAL APPROVAL PENDING.

Gordon S. Mac Arthur, P.E.
DIRECTOR OF ENGINEERING

Peter M. Murphy, P.E.
DESIGN ENGINEER

EMBANKMENT ON EARTH SLOPE
EMBANKMENT ON ROCK SLOPE
MUCK EXCAVATION
TYPICAL SLOPE ROUNDING

VERMONT AGENCY OF TRANSPORTATION

STANDARD

B-5

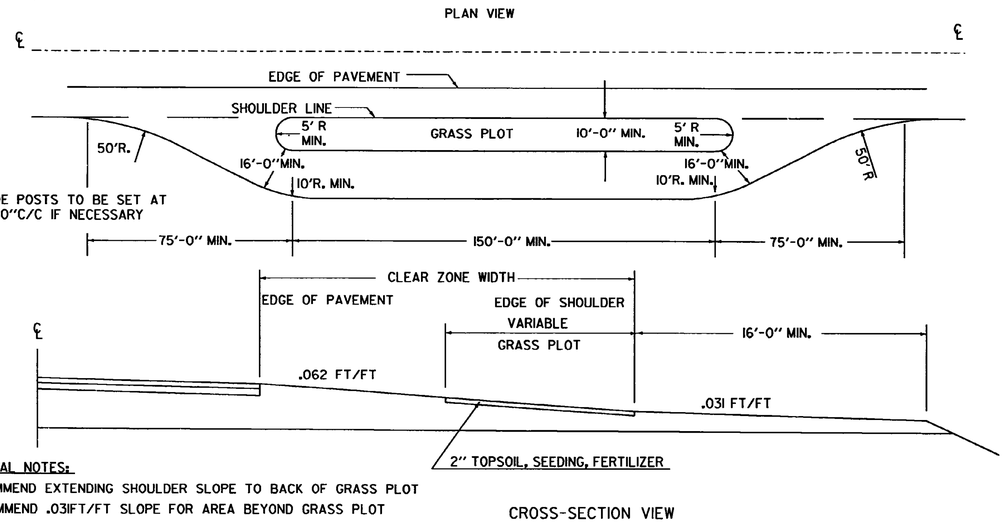


GENERAL NOTES:

RECOMMEND EXTENDING SHOULDER SLOPE TO BACK OF GRASS PLOT

RECOMMEND .031FT/FT SLOPE FOR AREA BEYOND GRASS PLOT

## TURNOUT WITH GRASS PLOT

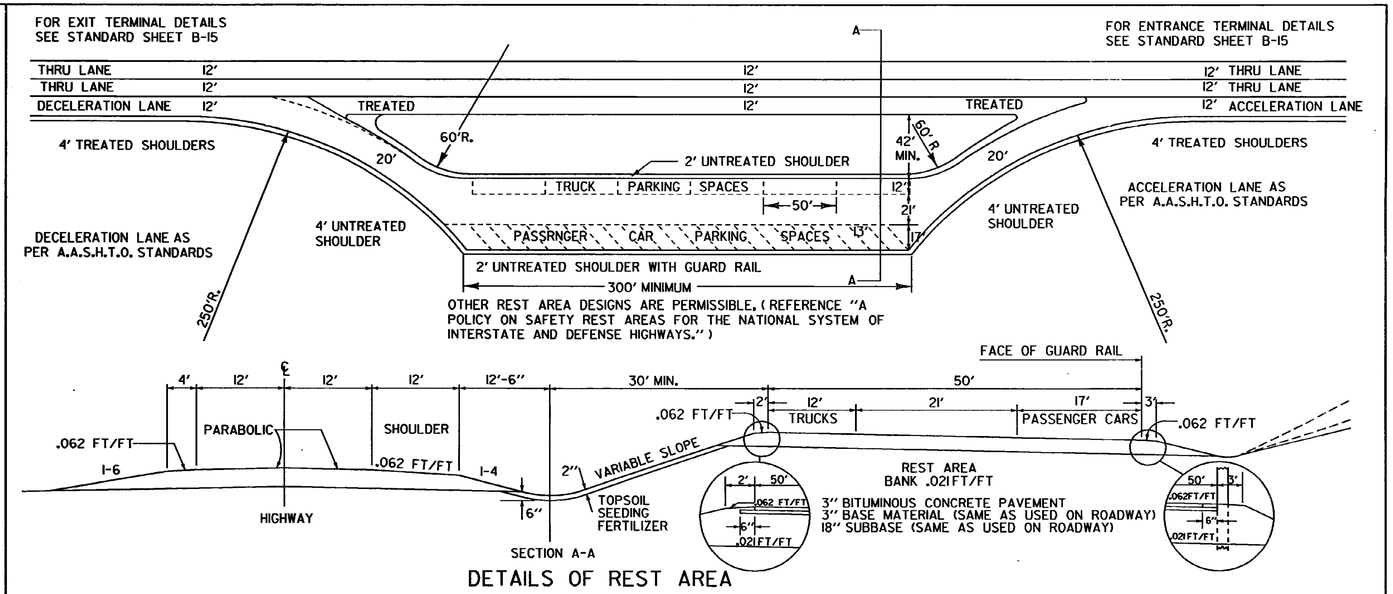


## DETAILS OF REST AREA

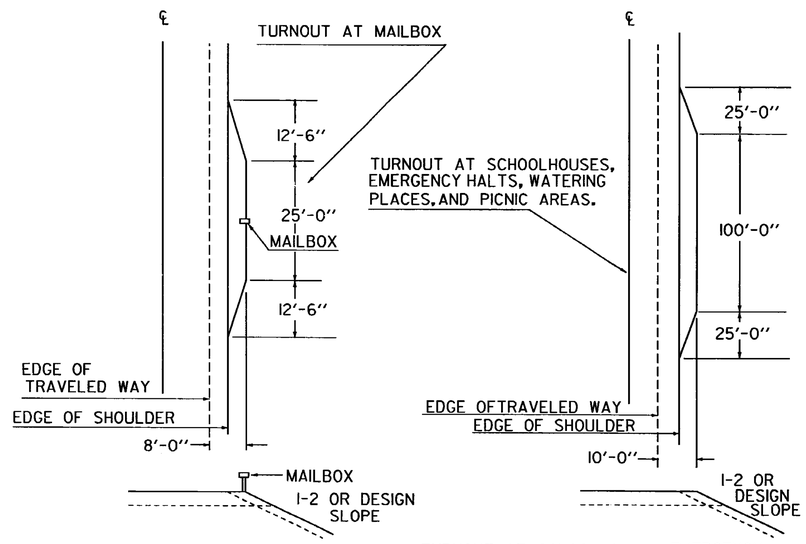


TURNOUT AT MAILBOX NOT NECESSARY IF SHOULDER WIDTH IS 8'-0" OR GREATER

TURNOUT AT SCHOOLHOUSES, EMERGENCY HALTS, WATERING PLACES, AND PICNIC AREAS. NOT NECESSARY IF SHOULDER WIDTH IS 10'-0" OR GREATER

## TURNOUTS

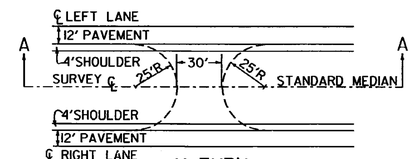


## U-TURN

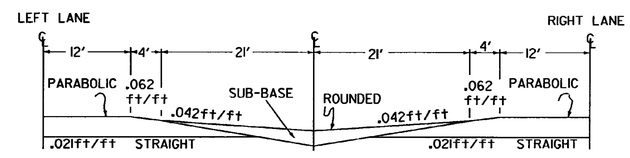


## CROSS-SECTION OF U-TURN (STANDARD MEDIAN)

SURFACE TREATMENT OF U-TURN SAME AS USED ON SHOULDERS

U-TURNS ON VARIED MEDIAN:
U-TURNS IN VARIED OR WIDENED MEDIANS SHALL BE CONSTRUCTED WITH THE RADII AND WIDTH OF THROAT AS U-TURN ON A STANDARD MEDIAN, BUT SHOULD BE TAPERED TO A TWENTY FOOT ROADWAY IN THE MEDIAN WHENEVER POSSIBLE.

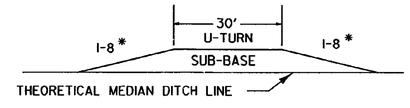


* SIDE SLOPE STEEPER THAN 1-8 PERMITTED WHEN NOT FACING APPROACHING TRAFFIC.

### REVISIONS AND CORRECTIONS

- DEC. 8, 1971 - ORIGINAL APPROVAL DATE
- DEC. 19, 1972 - REFERENCE TO G-8 REMOVED. CEDAR LOG GUARD RAIL REMOVED FROM REST AREA.
- JUNE 11, 1973 - G-8 ADDED TO EXIT SIDE OF STRUCTURES.
- DEC. 16, 1980 - INCREASED SHOULDER WIDENING FOR GUARD RAIL; ADDED CLEAR ZONE WIDTH TO DETAIL OF TURNOUT W/ GRASS PLOT; ADDED SECTION A-A FOR U-TURN.
- OCT. 25, 1985 - REVISED TO CONFORM TO 1986 SPECIFICATIONS. GUARD RAIL AT BRIDGE APPROACHES.
- FEB. 23, 1995 - DETAIL OF GUARD RAIL AT BRIDGE APPROACH REMOVED.

APPROVED

APPROVED FOR THIS PROJECT AND/OR DESIGN IMPLEMENTATION. FHWA FINAL APPROVAL PENDING.

Gordon S. MacPatchet
DIRECTOR OF ENGINEERING

Robert M. Murphy
DESIGN ENGINEER

# DETAIL OF REST AREA
# DETAIL OF U-TURN
# TURNOUTS

VERMONT AGENCY OF TRANSPORTATION

STANDARD

B-17

## DETAIL A — RESIDENTIAL DRIVE

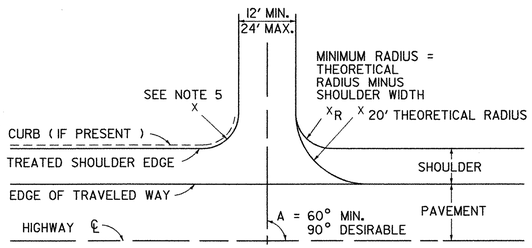


## DETAIL B — DUAL COMMERCIAL DRIVE TO BE USED ONLY UNDER SPECIAL CONDITIONS

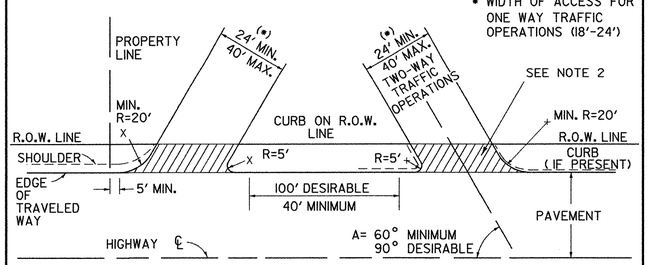


## DETAIL C — TWO-WAY UNDIVIDED COMMERCIAL DRIVE FOR SINGLE STORES, BUSINESSES, SMALL HOUSING DEVELOPMENTS

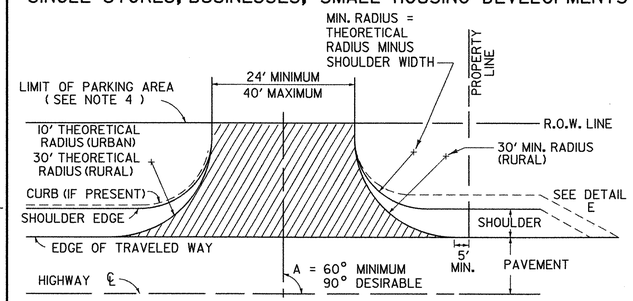


THIS DETAIL WILL ALSO APPLY TO COMMERCIAL SERVICE DRIVES, WHEN AUTHORIZED, HAVING A MAXIMUM WIDTH OF 20'. THE SERVICE DRIVE WILL HAVE A "SERVICE VEHICLES ONLY" SIGN PLACED AT THE HIGHWAY ROW LINE. SIGN SHALL BE 18"X 24" AS PRESCRIBED IN THE "STANDARD HIGHWAY SIGNS BOOK". A SUPPLEMENTAL PUBLICATION TO MUTCD.

## DETAIL D — TWO-WAY COMMERCIAL DRIVE WITH DIVISIONAL ISLAND FOR SHOPPING CENTERS, LARGE HOUSING DEVELOPMENTS, INDUSTRIAL PLANTS AND SERVICE STATIONS

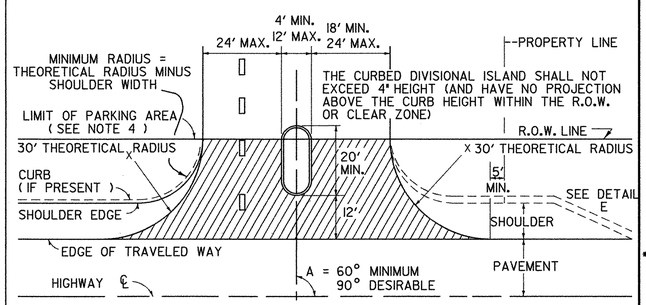


## DETAIL E — RIGHT TURN LANE FOR COMMERCIAL DRIVE (UNSIGNALIZED INTERSECTIONS ONLY)

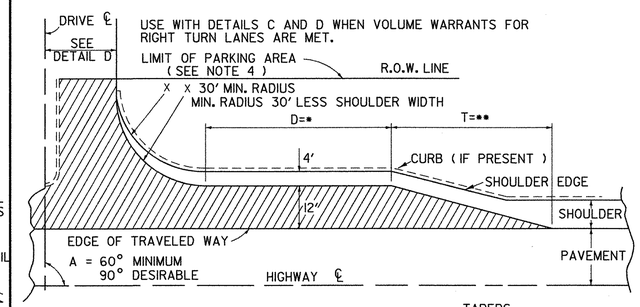


• STORAGE LENGTH IS VARIABLE DEPENDING ON TRAFFIC VOLUME AND MUST BE ADJUSTED TO PROVIDE PROPER DECELERATION LENGTH. REFER TO VAOT STANDARD E-192

TAPERS

| SPEED (MPH) | 30 | 35 | 40 | 50 |
|---|---|---|---|---|
| ••LENGTH (MIN)(FT)(T) | 100 | 120 | 140 | 180 |
| RATE | 8:1 | 10:1 | 12:1 | 15:1 |

## DETAIL F — MINIMUM HORIZONTAL SEPARATION BETWEEN DRIVEWAYS AND INTERSECTING SIDEROADS

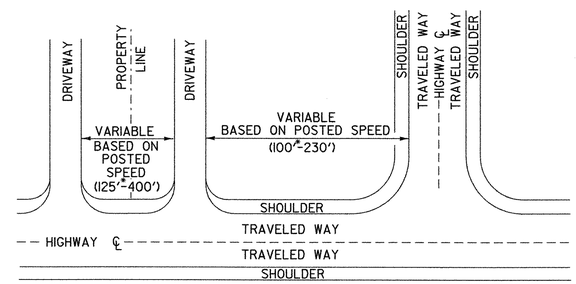


• MINIMUM UNLESS NO OTHER REASONABLE ACCESS IS AVAILABLE AND PRIOR APPROVAL IS GRANTED BY THE VAOT ITEMS SUCH AS TRAFFIC SIGNALS, HIGH TRAFFIC VOLUMES, OR FUNCTIONAL CLASS OF HIGHWAY SHOULD BE CONSIDERED WHEN DETERMINING APPROPRIATE SEPARATION DISTANCE. WHEN CURRENT RECOMMENDED SEPARATION DISTANCE CANNOT BE OBTAINED RESTRICTION OF TURNING MOVEMENTS MAY BE REQUIRED.

## DETAIL G — PERSPECTIVE SKETCH OF DRIVE INTERSECTION SHOWING DEPRESSION

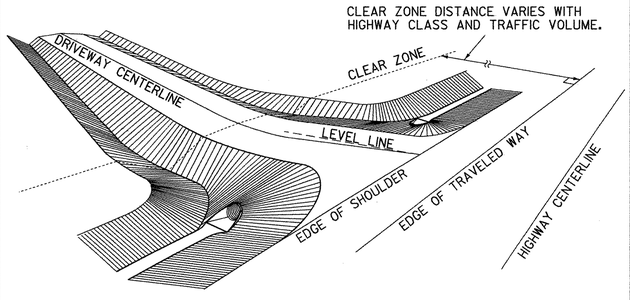


## DETAIL H — PROFILE OF DRIVE INTERSECTION SHOWING 5" DEPRESSION ( CUT SECTION )

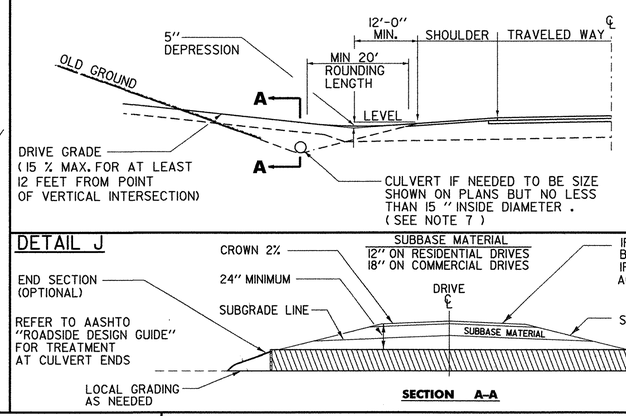


## DETAIL I — PROFILE OF DRIVE INTERSECTION ( FILL SECTION )

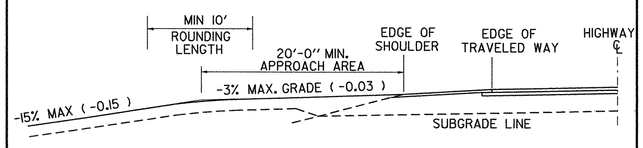


## DETAIL J

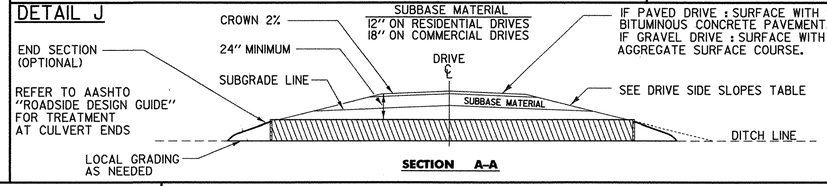


### DRIVE SIDE SLOPES

| LOCATION OF SLOPE | SLOPE RATE |
|---|---|
| V > 40 MPH | 1:6 OR FLATTER |
| URBAN AREAS, OR V ≤ 40 MPH | 1:4 DESIRABLE<br>1:2 ALLOWABLE |
| OUTSIDE CLEAR ZONE | 1:2 OR FLATTER |

NOTES:

1. THIS SHEET IS INTENDED FOR USE BY DESIGNERS ON HIGHWAY PROJECTS AND IN CONJUNCTION WITH A PERMIT FOR WORK WITHIN HIGHWAY RIGHTS OF WAY (FORM TA 210). ALL CONSTRUCTION REQUIRED BY THE PERMIT AND INDICATED ON THIS SHEET SHALL BE THE RESPONSIBILITY OF THE APPLICANT AND IS SUBJECT TO THE APPROVAL OF THE VT. AGENCY OF TRANSPORTATION. WHEN USED WITH THE PLANS FOR A HIGHWAY CONSTRUCTION PROJECT. THIS SHEET IS INTENDED TO BE A GUIDE FOR THE DESIGNER CONCERNING DRIVE WIDTHS, HORIZONTAL, VERTICAL AND GEOMETRIC CHARACTERISTICS.
2. ALL COMMERCIAL DRIVES SHALL BE PAVED FROM THE EDGE OF THE TRAVELED WAY TO THE HIGHWAY RIGHT-OF-WAY, TO THE FARTHEST POINT OF CURVATURE ON THE DRIVEWAY EDGE OR AS DIRECTED BY THE DISTRICT TRANSPORTATION ADMINISTRATOR. THIS PAVING IS INDICATED IN DETAILS (B THRU E) BY HATCHING.
3. DEPTH OF SUBBASE AND PAVEMENT TO BE THE SAME AS HIGHWAY OR AS SHOWN IN DETAIL J WITHIN THE LIMITS OF THE HIGHWAY RIGHT-OF-WAY.
4. VEHICULAR ACCESS FROM PARKING AREAS TO THE RIGHT-OF-WAY AT OTHER THAN APPROVED ACCESS POINTS WILL BE PREVENTED BY THE CONSTRUCTION OF CURBING OR OTHER SUITABLE PHYSICAL BARRIER.
5. IF CURB IS PRESENT, SEE APPROPRIATE CURB DETAIL STANDARD OR MATCH TOWN/CITY STANDARD CURB TREATMENT.
6. WHERE TRAFFIC VOLUME FOR A PROJECT IS SUBSTANTIAL THE AGENCY MAY REQUIRE SPECIAL LANES FOR TURNING, SIGNALS OR OTHER MODIFICATIONS. BASED ON TRAFFIC STUDIES THE AGENCY WILL DETERMINE SPECIFIC TREATMENT TO BE USED. ON DEVELOPER PROJECTS THE AGENCY WILL WORK WITH THE APPLICANT TO IMPLEMENT CHANGES TO THE STATE HIGHWAY.
7. CIRCULAR DRAINAGE CULVERTS UNDER DRIVES SHALL HAVE A MINIMUM INSIDE DIAMETER ( I.D. ) OF 15". PIPE ARCHES USED UNDER DRIVES SHALL HAVE A MINIMUM INSIDE CROSS-SECTIONAL AREA EQUIVALENT TO THAT PROVIDED BY A 15" CIRCULAR PIPE.
8. THE OFFSET BETWEEN THE PROPERTY LINE AND THE EDGE OF THE DRIVEWAY MAY BE GOVERNED BY LOCAL ZONING LAWS. DRIVEWAY WIDTH RESTRICTIONS SHOWN PERTAIN ONLY TO THE AREA WITHIN THE HIGHWAY R.O.W. OR THE END OF THE TURNING RADIUS WHICHEVER IS GREATEST.
9. DRIVEWAY GRADES STEEPER THAN THOSE SHOWN MAY BE ALLOWED AS LONG AS A 20' APPROACH AREA IS ACHIEVED FOR THE VEHICLE TO PAUSE BEFORE ENTERING THE HIGHWAY. (WHERE CURB & SIDEWALKS EXIST, SEE STANDARDS C-2A & C-2B)
10. INTERSECTION SIGHT DISTANCES, EQUAL TO OR GREATER THAN THOSE SHOWN BELOW, SHOULD BE PROVIDED IN BOTH DIRECTIONS FOR ALL DRIVES ENTERING ON PUBLIC HIGHWAYS, UNLESS OTHERWISE APPROVED BY THE AGENCY OF TRANSPORTATION. INTERSECTION SIGHT DISTANCE IS MEASURED FROM A POINT ON THE DRIVE AT LEAST 15 FEET FROM THE EDGE OF TRAVELED WAY OF THE ADJACENT ROADWAY AND MEASURED FROM A HEIGHT OF EYE OF 3.5 FEET ON THE DRIVE TO A HEIGHT OF 3.50 FEET ON THE ROADWAY.

### SIGHT DISTANCE CHART

| POSTED SPEED OR DESIGN SPEED ( M.P.H. ) | MINIMUM STOPPING SIGHT DISTANCE (FT) | MINIMUM INTERSECTION SIGHT DISTANCE • (FT) |
|---|---|---|
| 25 | 155 | 280 |
| 30 | 200 | 335 |
| 35 | 250 | 390 |
| 40 | 305 | 445 |
| 45 | 360 | 500 |
| 50 | 425 | 555 |
| 55 | 495 | 610 |
| 60 | 570 | 665 |
| 65 | 645 | 720 |

THE ABOVE VALUES ARE TAKEN FROM THE 2004 AASHTO " A POLICY ON GEOMETRIC DESIGN OF HIGHWAYS & STREETS."

NOTE : ADVANCE WARNING SIGNS WILL BE REQUIRED IF OBTAINABLE INTERSECTION SIGHT DISTANCES ARE BELOW MINIMUM STOPPING SIGHT DISTANCES.

THE CHART IS ENTERED TO SELECT DESIGN VALUES BASED ON THE POSTED SPEED LIMIT IN MPH. VALUES FOR DESIGN ARE CALCULATED BASED ON THE DESIGN SPEED IN MPH.

• ASSUMES A GAP OF 7.5 SECONDS IN THE TRAFFIC STREAM ON THE HIGHWAY MAINLINE BASED ON THE HIGHWAY DESIGN SPEED IN MPH. THIS ALLOWS A STOPPED PASSENGER VEHICLE TO ENTER THE MAINLINE FROM THE DRIVE WITHOUT UNDULY INTERFERING WITH THE HIGHWAY OPERATIONS.

REVISIONS AND CORRECTIONS

DEC. 11, 1992 - THIS STANDARD SUPERCEDES B-71 (7/23/80R), B-71A (3/12/90), AND B-13 (12/14/71).
JUNE 1, 1994 - REISSUED, WITHOUT CHANGE, UNDER NEW SIGNATURES.
MAR. 10, 1995 - REISSUED, WITHOUT CHANGE, UNDER NEW SIGNATURES.
NOV. 16, 2000 - CHANGES MADE TO CONFORM WITH LANGUAGE AND DIMENSIONS IN ACCESS MANAGEMENT PROGRAM GUIDELINES.
FEB 1, 2004 - CHANGES MADE TO SIGHT DISTANCE CHART TO CONFORM WITH NEWEST AASHTO CRITERIA.
JULY 8, 2005 - CHANGE MADE TO OBJECT HEIGHT TO CONFORM WITH NEWEST AASHTO CRITERIA

APPROVED

DIRECTOR OF PROGRAM DEVELOPMENT

CHIEF OF UTILITIES AND PERMITS

FEDERAL HIGHWAY ADMINISTRATION

# STANDARDS FOR RESIDENTIAL AND COMMERCIAL DRIVES

VERMONT AGENCY OF TRANSPORTATION

STANDARD B-71

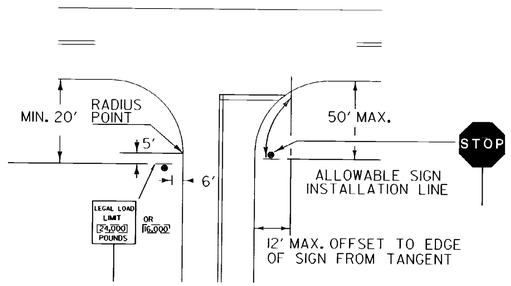


STOP SIGN SHALL BE PLACED ON DRIVERS RIGHT, MAINTAINING MAXIMUM VISIBLITY. CLEARANCE SHALL BE A MINIMUM OF 6' AND A MAXIMUM OF 50' FROM EDGE LINE OF INTERSECTING ROADWAY AND DOES NOT HAVE TO BE ADJACENT TO THE STOP BAR.

**LEGAL LOAD LIMIT AND STOP SIGNS AT INTERSECTIONS WITH TOWN HIGHWAYS**

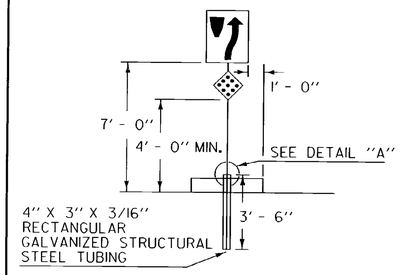


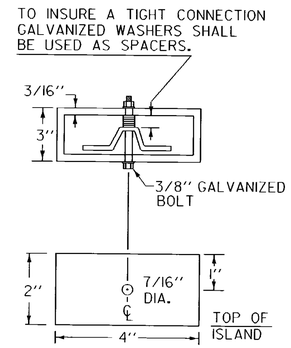


SLEEVE DETAIL "A"

**SIGNS ON MEDIAN ISLANDS IN THE LINE OF TRAFFIC**

INCREASE VERTICAL CLEARANCE TO 7' IN AREAS OF FREQUENT ROADSIDE PARKING OR PEDESTRIAN ACTIVITY

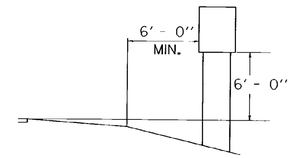


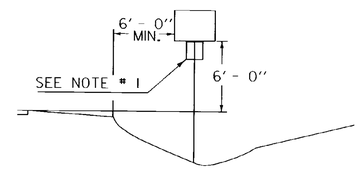


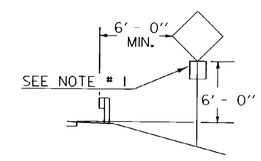


**RURAL**

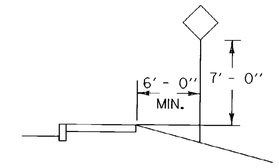


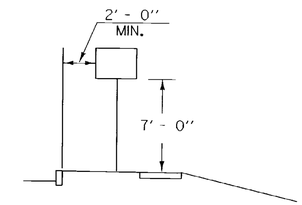


IF SUFFICIENT CLEARANCE IS NOT AVAILABLE BETWEEN CURB AND SIDEWALK MOUNT SIGN BEHIND SIDEWALK AS SHOWN AT TOP. CHECK FOR ADEQUATE R.O.W..

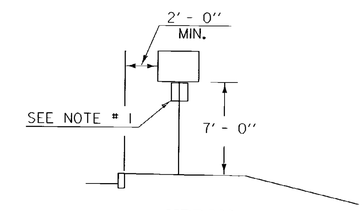


**URBAN**

## NOTES:

1. IN BOTH RURAL AND URBAN LOCATIONS. IF A SECONDARY SIGN IS MOUNTED BELOW ANOTHER SIGN, THE MINIMUM CLEARANCE MAY BE REDUCED BY ONE FOOT.
2. IN RURAL AREAS WITH NO OR MINIMAL SHOULDER, THE LATERAL CLEARANCE TO THE EDGE OF A SIGN SHOULD BE A MINIMUM OF 12' FROM THE EDGE OF THE TRAVELED WAY.
3. ALSO SEE OTHER STANDARD SHEETS FOR MOUNTING CLEARANCE AND SPACING OF DESTINATION AND ROUTE MARKER ASSEMBLIES AND TOWN LINE SIGNS.

POST REFERENCE:

REFER TO THE DETAILS ON THE APPROPRIATE STANDARD DRAWING FOR INFORMATION CONCERNING THE PROPER MOUNTING OF SIGNS ON APPROPRIATE POSTS.

**OTHER STDS. REQUIRED:** **E-160** **E-161** **E-162** **E-163** **E-164**

REVISIONS AND CORRECTIONS

JAN. 23, 1995 - DATE OF ORIGINAL ISSUE

AUG. 08, 1995 - VARIOUS MINOR NOTE REVISIONS

APPROVED FOR THIS PROJECT AND/OR DESIGN IMPLEMENTATION. FHWA FINAL APPROVAL PENDING.

APPROVED

Gordon S. MacArthur
DIRECTOR OF ENGINEERING

David A. Ross
TRAFFIC AND SAFETY ENGINEER

# STANDARD SIGN PLACEMENT CONVENTIONAL ROAD

/traf/std/stdel21.dgn : stdel21.i

VERMONT AGENCY OF TRANSPORTATION

STANDARD

E-121

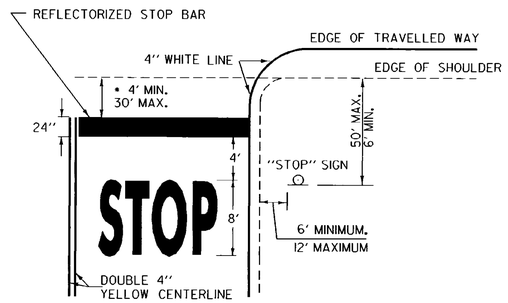


• THE "DESIRED STOPPING POINT" IS THE LOCATION BASED ON SITE CONDITIONS THAT BEST ALLOWS THE STOPPED VEHICLE TO VIEW THE APPROACHING TRAFFIC.

**STOP BAR LAYOUT**

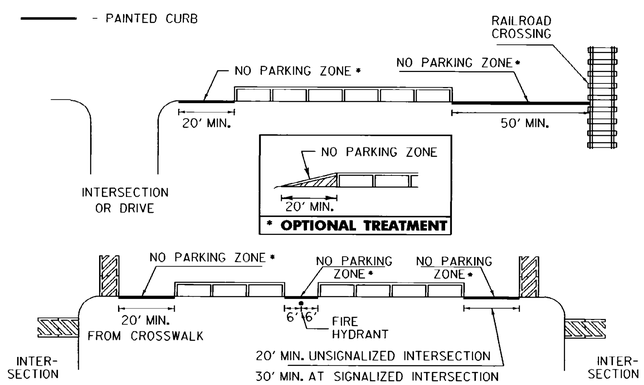


**NO PARKING LAYOUT DETAILS**

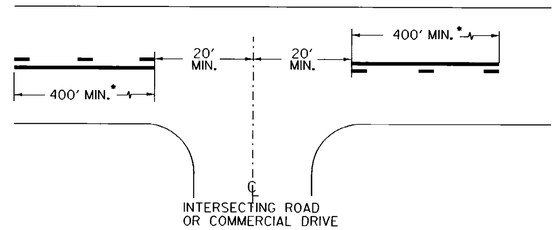


• THE SOLID LINE SHALL BE PAIRED WITH EITHER A SOLID OR DASHED LINE DEPENDING ON SIGHT DISTANCE AVAILABILITY IN THE OPPOSING DIRECTION. ADJUSTMENTS TO THE 40 FOOT CENTERLINE OPENING MAY BE MADE TO ACCOMMODATE SKEWED INTERSECTIONS.

CENTERLINE BREAKES:

A. AT ALL STATE HIGHWAYS AND TOWN HIGHWAYS, INCLUDING CLASS 4 TH'S. THAT HAVE STOP AND LEGAL LOAD LIMIT SIGNS INSTALLED

B. COMMERCIAL DRIVES:

1. WHERE A SEPERATE TURN LANE EXISTS ON THE MAIN LINE (LT. OR RT.)
2. SIGNIFICANT TRAFFIC VOLUMES EXISTS.
3. IF MOTORISTS NEED ASSISTANCE TO DEFINE ENTRANCE POINTS.

**CENTERLINE LAYOUT**

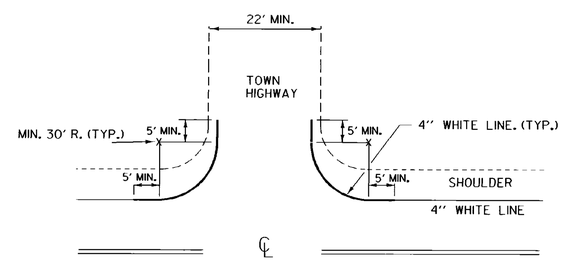


EDGELINES SHALL BE APPLIED TO ALL STATE HIGHWAYS AND SHOULD BE MAINTAINED AT A CONSTANT DISTANCE FROM THE CENTERLINE UNLESS PAVEMENT WIDTH INCREASES TO ALLOW WIDER LANES.

APPLY EDGELINE AS DETAILED ON ALL PAVED CLASS 1 & CLASS 2 TOWN HIGHWAYS AND ANY CLASS 3 TOWN HIGHWAY 22 FEET OR MORE IN WIDTH.

IF MIN. 30 FOOT RADIUS CANNOT BE OBTAINED, OR THE TOWN HIGHWAY IS NOT PAVED, BREAK THE EDGELINE USING AN 80 FOOT GAP AT INTERSECTION.

**EDGELINE LAYOUTS**

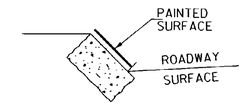


**GRANITE SLOPE EDGING**

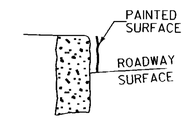


**VERTICAL GRANITE CURB**

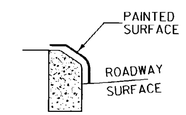


TYPE A (CONCRETE)

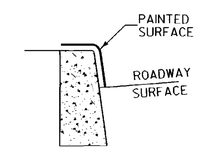


TYPE B (CONCRETE)

**PAINTED CURB**

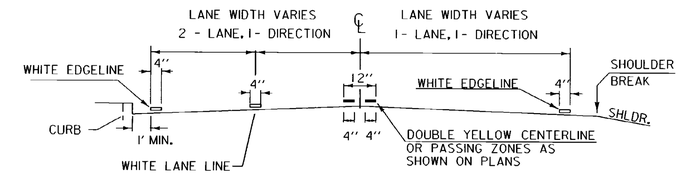


**PAVEMENT MARKING PLACEMENT DETAIL**

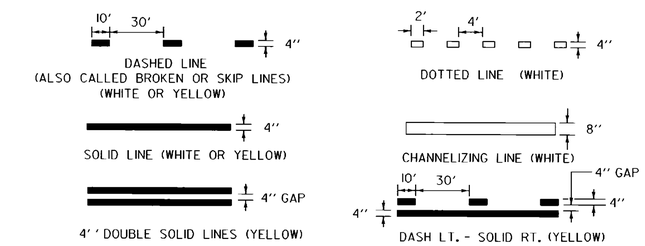


**PAVEMENT MARKING LINE DETAILS**

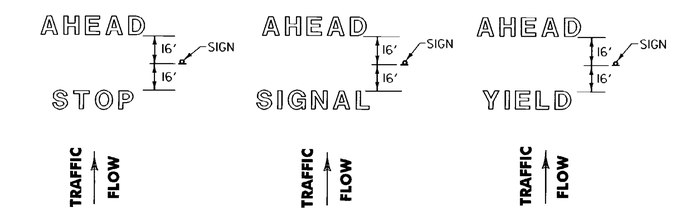


**LETTER IN WORD MARKING SPACING DETAIL**

**NOTE: SINGLE WORDS CENTERED ON SIGN ie: SCHOOL OR YIELD**

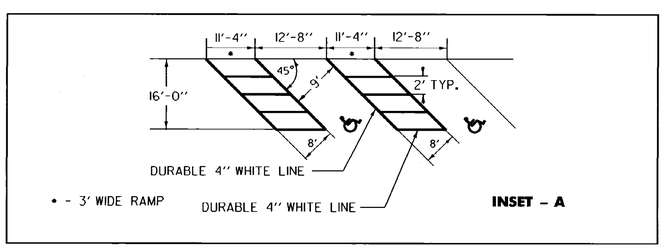


**INSET - A**

**NOTE:**

SEE STANDARD SHEET E-191 FOR HANDICAP SYMBOL POSITIONING AND DETAIL.

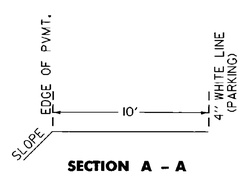


**SECTION A - A**

**TRUCK PARKING DETAIL**

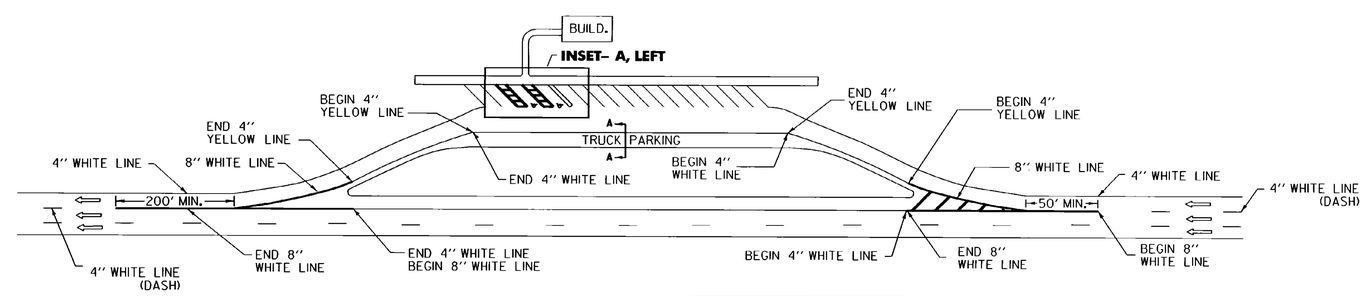


**REST AREA PARKING DETAILS**

**THIS SHEET IS NOT TO SCALE**

**OTHER STDS. E - 191, E - 192 REQUIRED**

REVISIONS AND CORRECTIONS

AUG. 18, 1995 - DATE OF ORIGINAL ISSUE

APPROVED FOR THIS PROJECT AND/OR DESIGN IMPLEMENTATION. FHWA FINAL APPROVAL PENDING.

APPROVED

DIRECTOR OF ENGINEERING

TRAFFIC AND SAFETY ENGINEER

# PAVEMENT MARKING DETAILS

/traf/std/stdel93.dgn/stdel93.i

VERMONT AGENCY OF TRANSPORTATION

STANDARD

E-193

## "W" BEAM GUARDRAIL WITH STEEL POSTS

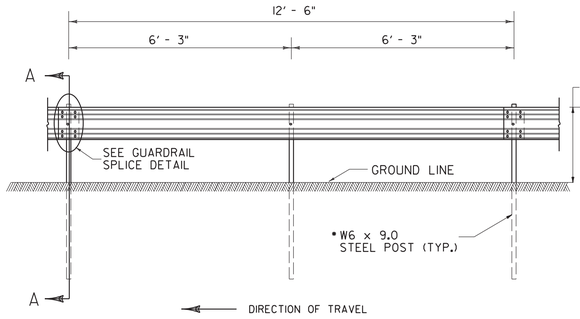


ELEVATION FROM ℄ OF ROAD

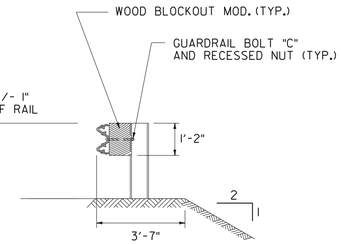


SINGLE - FACED BARRIER

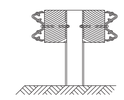

DOUBLE - FACED BARRIER

SECTION A -A

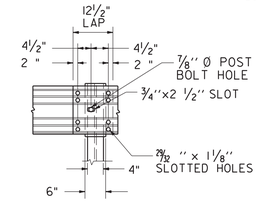


PLAN

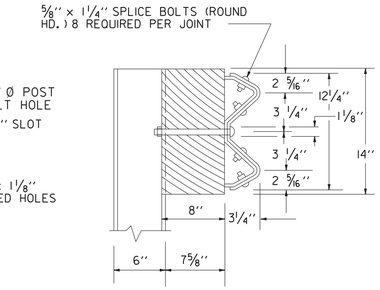


ELEVATION

SECTION

GUARDRAIL SPLICE DETAIL

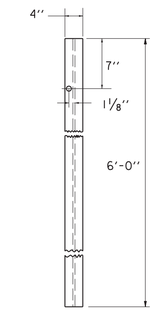


FRONT FACE
STEEL POST

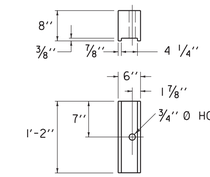


POST FACE
MODIFIED WOOD BLOCKOUT- ROUTED
6" X 8" X 1'-2"
FOR USE W/ STEEL POSTS ONLY

NOTES:

1. BLOCKS SHALL BE MADE OF TIMBER WITH A STRESS GRADE OF 1200 PSI OR MORE. TESTING SHALL BE IN ACCORDANCE WITH WEST COAST LUMBER INSPECTION BUREAU, SOUTHERN PINE INSPECTION BUREAU OR OTHER APPROPRIATE ASSOCIATION. TIMBER FOR BLOCKS SHALL BE ROUGH SAWN (UNPLANED) WITH DIMENSIONS INDICATED. THE SIZE TOLERANCE OF ROUGH SAWN BLOCKS IN THE DIRECTION OF THE BOLT HOLES SHALL BE NOT MORE THAN +/- ¼".
2. SUPPLY WOOD BLOCKS PER AASHTO M 168.
3. TREAT WITH PRESERVATIVE PER AASHTO M 133.
4. BLOCKOUTS MAY ALSO BE MADE OF APPROVED ALTERNATIVE MATERIAL.

## "W" BEAM GUARDRAIL WITH WOOD POSTS

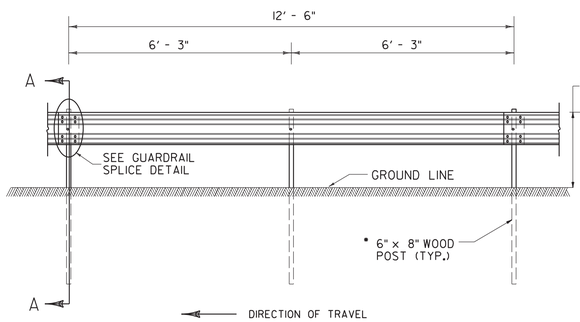


ELEVATION FROM ℄ OF ROAD

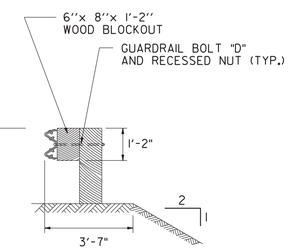


SINGLE - FACED BARRIER

• NOTE : UNLESS OTHERWISE SPECIFIED ON PLANS

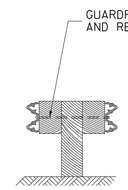


DOUBLE - FACED BARRIER

SECTION A -A

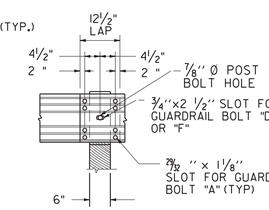


PLAN

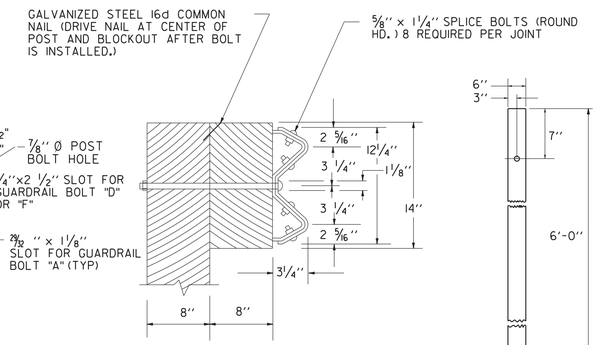


ELEVATION

SECTION

GUARDRAIL SPLICE DETAIL

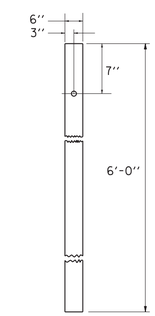


FRONT FACE
WOOD POST

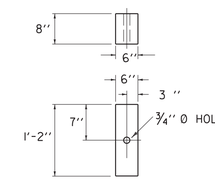


POST FACE
WOOD BLOCKOUT
6" X 8" X 1'-2"

NOTES:

1. BLOCKS SHALL BE MADE OF TIMBER WITH A STRESS GRADE OF 1200 PSI OR MORE. TESTING SHALL BE IN ACCORDANCE WITH WEST COAST LUMBER INSPECTION BUREAU, SOUTHERN PINE INSPECTION BUREAU OR OTHER APPROPRIATE ASSOCIATION. TIMBER FOR BLOCKS SHALL BE ROUGH SAWN (UNPLANED) WITH DIMENSIONS INDICATED. THE SIZE TOLERANCE OF ROUGH SAWN BLOCKS IN THE DIRECTION OF THE BOLT HOLES SHALL BE NOT MORE THAN +/- ¼".
2. SUPPLY WOOD BLOCKS PER AASHTO M 168.
3. TREAT WITH PRESERVATIVE PER AASHTO M 133.
4. BLOCKOUTS MAY ALSO BE MADE OF APPROVED ALTERNATIVE MATERIAL.

## GUARDRAIL DELINEATOR

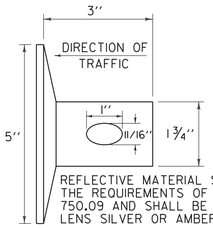


REFLECTIVE MATERIAL SHALL MEET THE REQUIREMENTS OF SUBSECTION 750.09 AND SHALL BE OF ENCAPSULATED LENS SILVER OR AMBER.

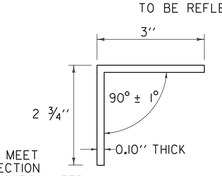


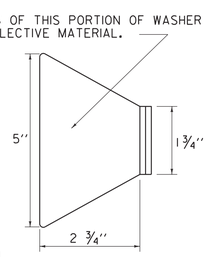


THIS REFLECTORIZED ALUMINUM WASHER IS TO BE PLACED IN VALLEY OF BEAM WHEN MOUNTING BEAM ONTO EACH FIFTH POST. WASHER SHALL MEET SPECIFICATION REQUIREMENTS FOR A.S.T.M. B-209 ALLOY 5052-H32.

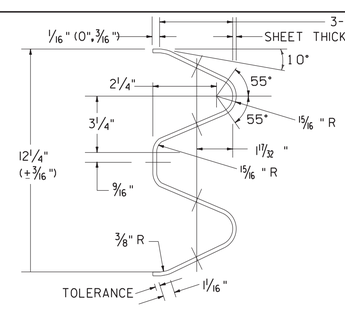


ARTBA RE-3[206'-3"=12'-6" CLASS A, TYPE 11-73
TYPICAL GUARDRAIL SECTION

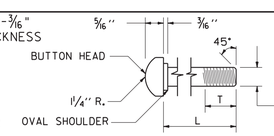


GUARDRAIL BOLT

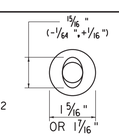


| GUARDRAIL BOLTS | | | | FASTENER USED IN | |
|---|---|---|---|---|---|
| BOLT DES. | ARTBA REF. NO. | L | T (MIN.) | STEEL POSTS | WOOD POSTS |
| "A" | F-3[1¼]-76 | 1¼" | 1" | X | X |
| "C" | F-3[9½]-76 | 9½" | 1¾" | X | |
| "D" | F-3[18]-76 | 18" | 2½" | | X |
| "F" | F-3[25]-76 | 25" | 2" | | X |

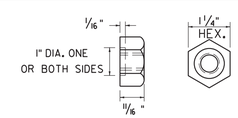


RECESSED NUT FOR GUARDRAIL BOLT

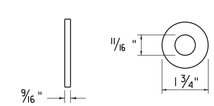


WASHER FOR ⅝" BOLTS
ARTBA F-13-73
NOTE: WASHER IS USED UNDER RECESSED NUT WHERE GUARDRAIL BOLT IS USED WITH WOOD POSTS.

GENERAL NOTES:

1. GUARDRAIL SHALL MEET THE REQUIREMENTS OF AASHTO M 180, CLASS A, TYPE 1, UNLESS OTHERWISE DESIGNATED.
2. GUARDRAIL SHALL BE SINGLE FACED UNLESS OTHERWISE DESIGNATED.
3. GUARDRAIL SECTIONS SHALL BE LAPPED IN THE DIRECTION OF TRAFFIC FLOW FOR THE LANE NEAREST THE GUARDRAIL.
4. FOR DESCRIPTION AND SPECIFICATION OF PARTS IDENTIFIED BY (ARTBA ...) AND OTHER DETAILS OF POSTS, POST ACCESSORIES, FASTENERS & RAIL ELEMENTS, SEE AASHTO-AGC-ARTBA JOINT TASK FORCE NO. 13, TITLED "A GUIDE TO STANDARDIZED HIGHWAY BARRIER HARDWARE", LATEST EDITION.
5. STANDARD STEEL BEAM TO BE 1/8" AND THE HEAVY DUTY TO BE 9/64 " THICK.

**OTHER STANDARD REQUIRED: G-1d**

REVISIONS AND CORRECTIONS

JUNE 1, 1994 - REISSUED, WITHOUT CHANGE, UNDER NEW SIGNATURES.

JAN. 3, 2000 - UPDATED TO REFLECT METRIC STD. CHANGES

FEB. 10, 2014 - UPDATED TO REFLECT GUARDRAIL HEIGHT OF 29"; AS NOTED IN FHWA LETTER DATED MAY 17, 2010

APPROVED

HIGHWAY SAFETY & DESIGN ENGINEER

DIRECTOR OF PROGRAM DEVELOPMENT

Mark D. Richter

FEDERAL HIGHWAY ADMINISTRATION

# STEEL BEAM GUARDRAIL WITH STEEL POSTS
# STEEL BEAM GUARDRAIL WITH WOOD POSTS

VERMONT AGENCY OF TRANSPORTATION

STANDARD

G-1

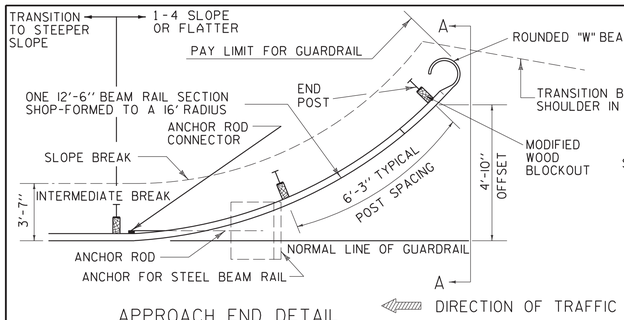


APPROACH END DETAIL

NHS APPROVED FOR USE WHERE DESIGN SPEED IS 40 OR LESS MPH

NON-NHS APPROVED FOR USE WHERE DESIGN SPEED IS 50 OR LESS MPH

DIRECTION OF TRAFFIC

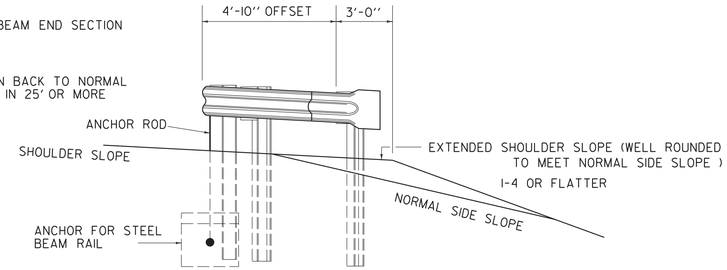


SECTION A-A

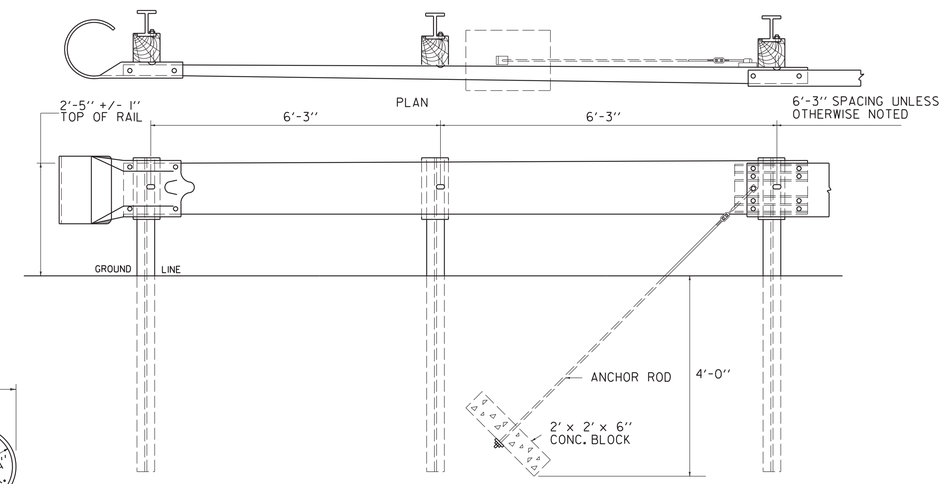


ASSEMBLY ELEVATION

TRAILING END TERMINAL FOR USE ON ONE-WAY HIGHWAYS

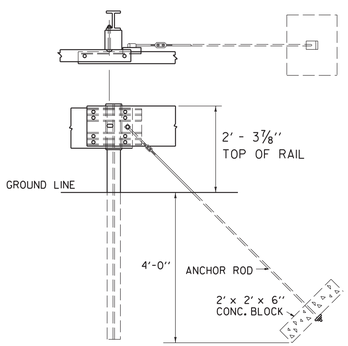


ANCHOR ROD

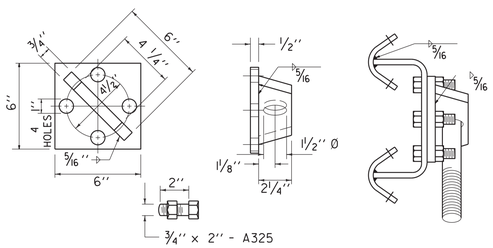


ANCHOR ROD CONNECTOR

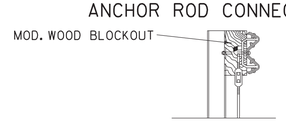


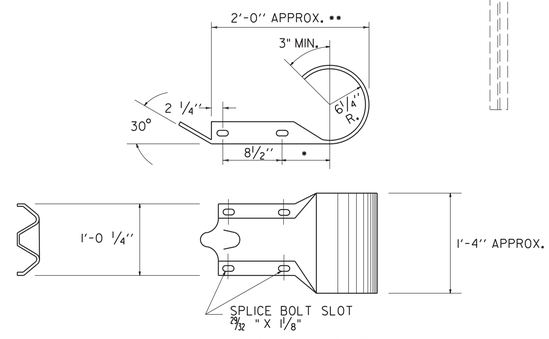


(ARTBA RE-6-79)

ROUNDED "W" BEAM END SECTION

• THIS DIMENSION IS 7 1/2" IN RE-7-79. IF THE DIMENSION IS USED IN THIS PART, IT WILL GIVE AN ACCEPTABLE OVERALL LENGTH (••) OF APPROXIMATELY 2'- 11/2."

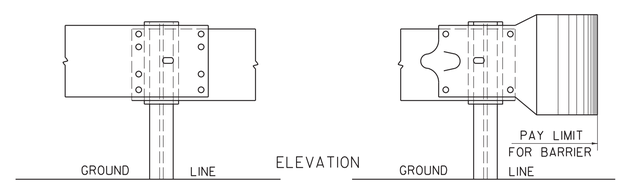


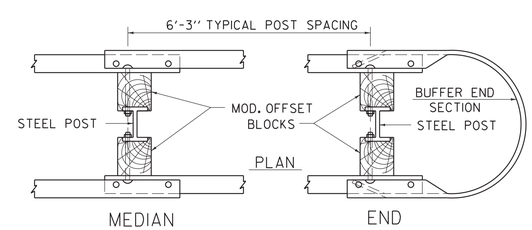


STEEL BEAM MEDIAN BARRIER

NOTE: TO BE USED OUTSIDE CLEAR ZONE ONLY.

GENERAL NOTES:

1. ALL METAL PARTS SHALL BE GALVANIZED
2. ALL WOOD POSTS SHALL BE GIVEN A PRESERVATIVE TREATMENT
3. DETAILS PERTINENT TO THE STANDARD INSTALLATION OF "W" BEAM SECTIONS WILL BE FOUND ON STANDARD DRAWING G-1.
4. FOR DESCRIPTION AND SPECIFICATIONS OF PARTS IDENTIFIED BY "(ARTBA...)" AND OTHER DETAILS OF POSTS, POST ACCESSORIES, FASTENERS AND RAIL ELEMENTS, SEE AASHTO-AGC-ARTBA JOINT TASK FORCE NO. 13, TITLED "A GUIDE TO STANDARDIZED HIGHWAY BARRIER HARDWARE", LATEST EDITION.
5. THE TRANSITION FROM THE APPROACH END TO THE STANDARD STEEL BEAM GUARDRAIL SHALL BE 25'-0" UNLESS OTHERWISE SPECIFIED.
6. WHEN STANDARD STEEL BEAM CONNECTS TO BRIDGE APPROACH RAIL OF A DIFFERENT HEIGHT THE LENGTH NEEDED TO TRANSITION THE HEIGHT OF STANDARD STEEL BEAM TO MATCH THE BRIDGE APPROACH RAIL SHALL BE 25'-0" UNLESS OTHERWISE SPECIFIED.
7. WHEN STANDARD STEEL BEAM CONNECTS TO A MANUFACTURED TERMNAL SECTION OF A DIFFERENT HEIGHT THE LENGTH NEEDED TO TRANSITION THE HEIGHT OF STANDARD STEEL BEAM TO MATCH THE MANUFACTURED TERMINAL SECTION SHALL BE 25'-0" UNLESS OTHERWISE SPECIFIED.

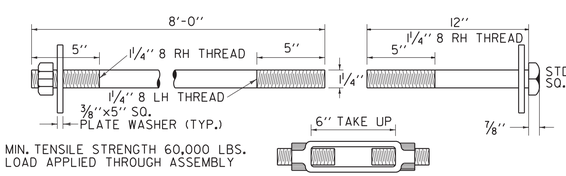


MIN. TENSILE STRENGTH 60,000 LBS.
LOAD APPLIED THROUGH ASSEMBLY

TURNBUCKLE

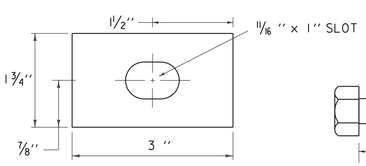


RECTANGULAR GUARDRAIL PLATE WASHER

(ARTBA F-12-73)

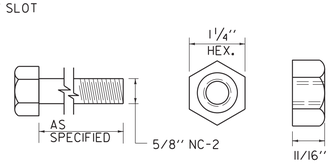


5/8" HEX NUT AND BOLT "F"

(ARTBA F-8-76)

FASTENER DETAILS

**OTHER STANDARD REQUIRED: G-1**

REVISIONS AND CORRECTIONS

JUNE 1, 1994 - REISSUED, WITHOUT CHANGE, UNDER NEW SIGNATURES.

JAN. 3, 2000 - UPDATED TO REFLECT METRIC STD. CHANGES

FEB. 10, 2014 - UPDATED TO REFLECT GUARDRAIL HEIGHT OF 29"; AS NOTED IN FHWA LETTER DATED MAY 17, 2010

APPROVED

HIGHWAY SAFETY & DESIGN ENGINEER

DIRECTOR OF PROGRAM DEVELOPMENT

Mark D. Richter

FEDERAL HIGHWAY ADMINISTRATION

# STEEL BEAM GUARDRAIL APPROACH END TERMINAL
# STEEL BEAM GUARDRAIL TRAILING END TERMINAL
# ANCHOR FOR STEEL BEAM GUARDRAIL
# STEEL BEAM MEDIAN BARRIER

VERMONT AGENCY OF TRANSPORTATION

STANDARD

G-1d

NOTES

1. ONLY LIGHTWEIGHT MAILBOXES MADE OF LIGHT SHEET METAL OR PLASTIC SHALL BE USED. MAILBOXES SHALL MEET REQUIREMENTS AND APPROVAL OF THE U.S. POSTAL SERVICE.
2. AN ALTERNATE MAILBOX SUPPORT STRUCTURE DESIGN AND CONSTRUCTION MAY BE USED AS LONG AS PROVEN CRASHWORTHY AND MEETS GUIDELINES AS SET OUT IN AASHTO'S "GUIDE FOR ERECTING MAILBOXES ON HIGHWAYS". SUPPORT STRUCTURE SHALL ALSO MEET REQUIREMENTS OF THE U.S. POSTAL SERVICE.
3. MAILBOX TURNOUT SHALL MEET B-17 STANDARD AS SET OUT IN "STATE OF VERMONT AGENCY OF TRANSPORTATION DESIGN STANDARDS FOR ROAD AND BRIDGE CONSTRUCTION".
4. IF THE STANDARD TURNOUT OFFSET CANNOT BE ATTAINED DUE TO RIGHT-OF-WAY CONSTRAINTS OR OTHER REASONS THE TURNOUT SHALL BE MODIFIED AS DIRECTED BY THE ENGINEER.

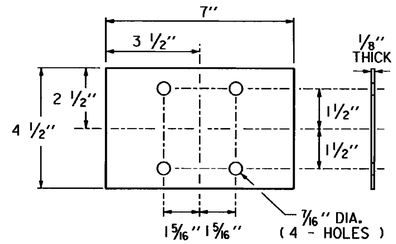


ANTI-TWIST DEVICE DETAIL FOR METAL PIPE

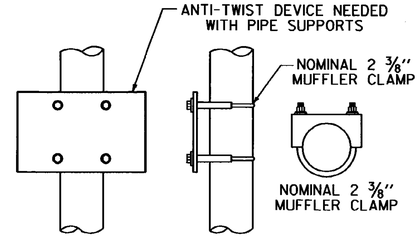


ANTI-TWIST DEVICE ASSEMBLY FOR METAL PIPES (USED FOR SINGLE AND MULTIPLE INSTALLATIONS)

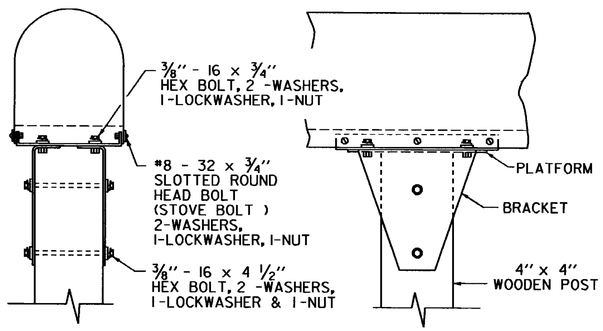


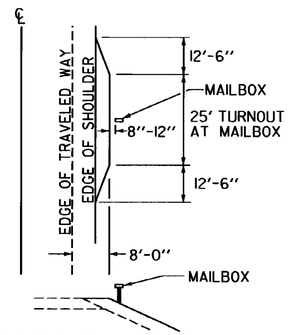


TURNOUT AT MAILBOX NOT NECESSARY IF SHOULDER WIDTH IS 8'-0" OR GREATER.

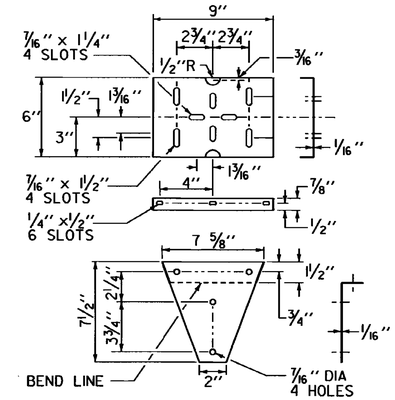


## SINGLE MAILBOX SUPPORT

PLATFORM AND BRACKET DETAIL FOR METAL OR WOOD POSTS (USED FOR SINGLE AND MULTIPLE BOXES)

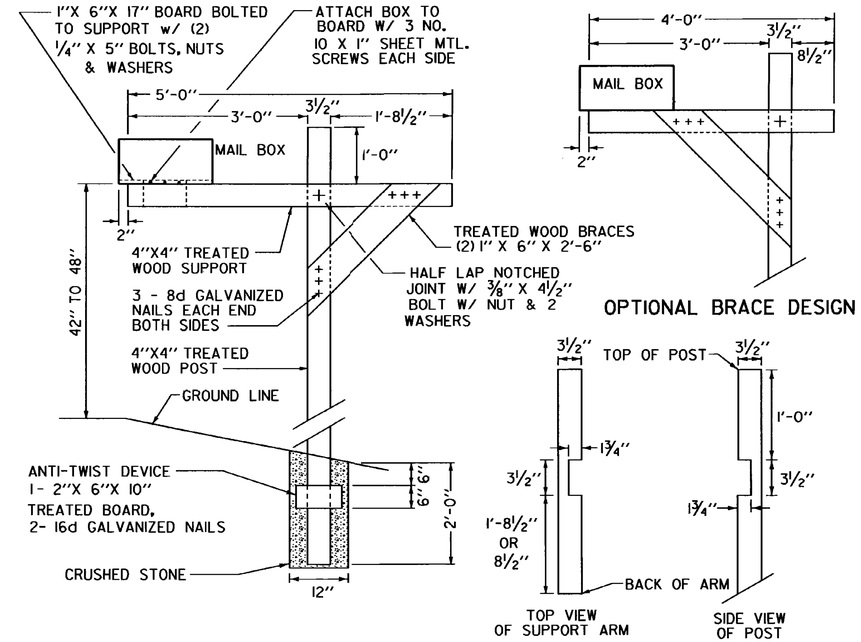


## CANTILEVER TYPE MAILBOX SINGLE SUPPORT

NOTE: ALL WOOD DIMENSIONS ARE NOMINAL SIZE

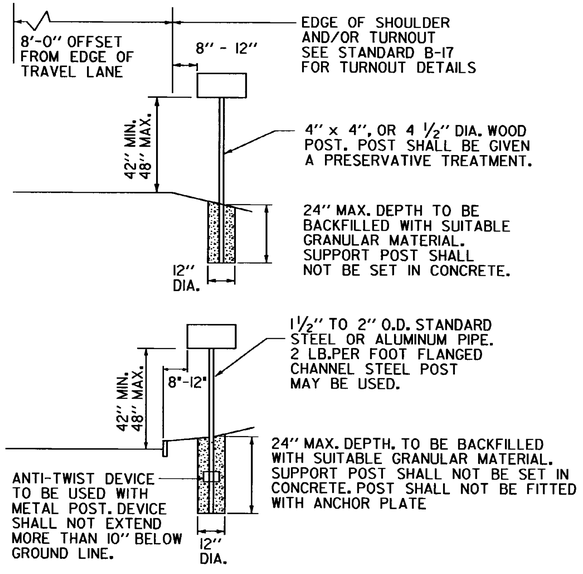


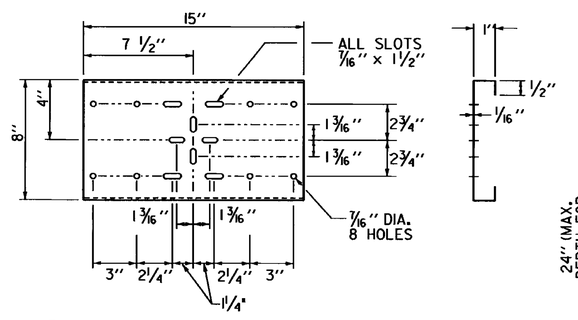


## SHELF FOR TWO BOXES

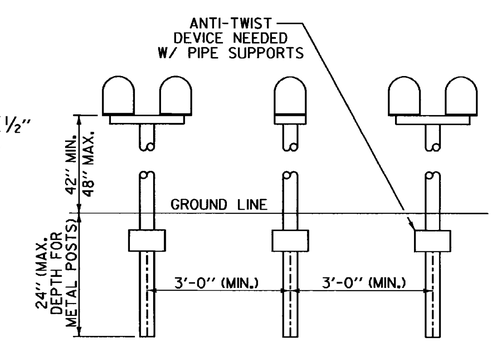


## SPACING FOR MULTIPLE POST INSTALLATION

(APPLIES TO BOTH SINGLE AND MULTIPLE MAILBOX SUPPORTS)

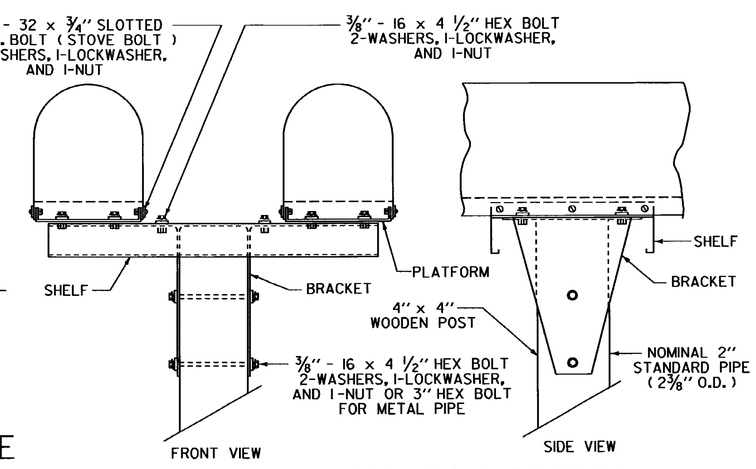


## MULTIPLE MAILBOX SUPPORT

| REVISIONS AND CORRECTIONS | |
|---|---|
| AUGUST 7, 1995 | ORIGINAL APPROVAL |

APPROVED

APPROVED FOR THIS PROJECT AND/OR DESIGN IMPLEMENTATION. FHWA FINAL APPROVAL PENDING.

DIRECTOR OF ENGINEERING

DESIGN ENGINEER

# MAILBOX SUPPORT DETAIL
# (SINGLE AND MULTIPLE SUPPORT)

VERMONT AGENCY OF TRANSPORTATION

STANDARD

J-3

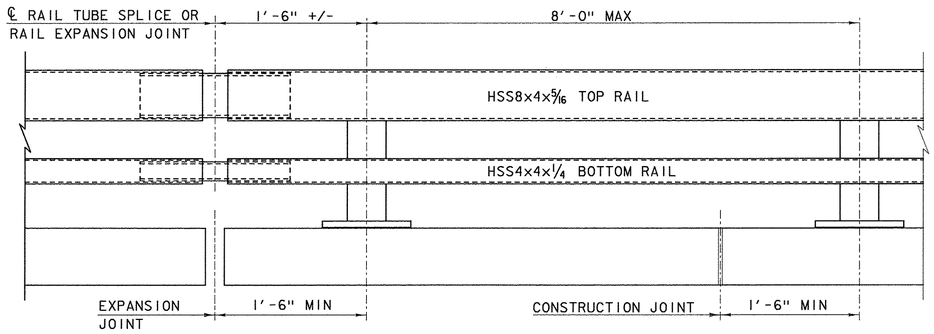


BRIDGE RAILING ELEVATION

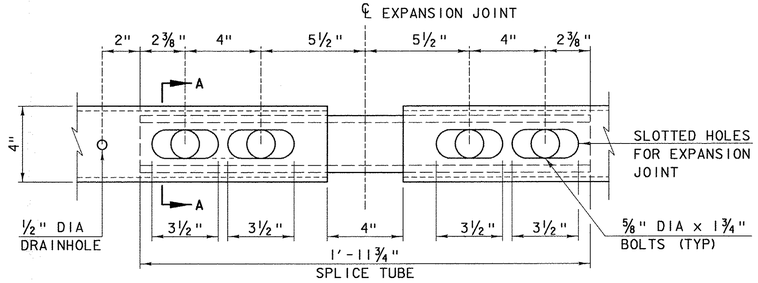


EXPANSION JOINT DETAIL

(BOTTOM VIEW)

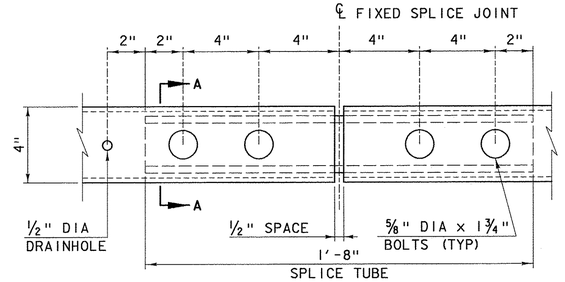


FIXED SPLICE JOINT DETAIL

(BOTTOM VIEW)

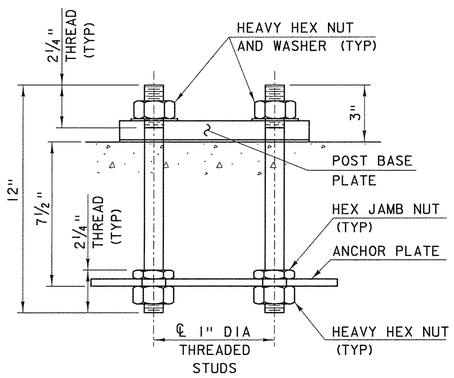


RAIL POST ANCHORAGE

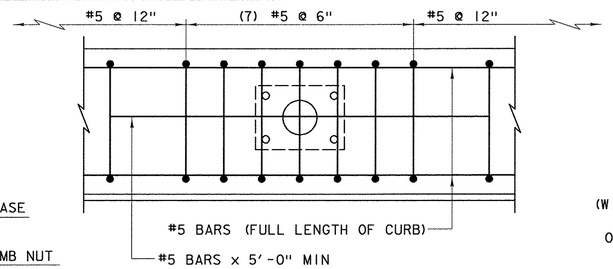


CURB REINFORCING PLAN

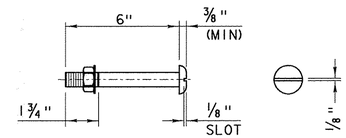


3/4" DIA A449 (TYPE I)

ROUND HEAD BOLT

(WITH WASHER AND PREVAILING TORQUE TYPE LOCK NUT)
(SEE NOTE #8)
ONLY FULL DIAMETER BODY BOLTS WILL BE ALLOWED.

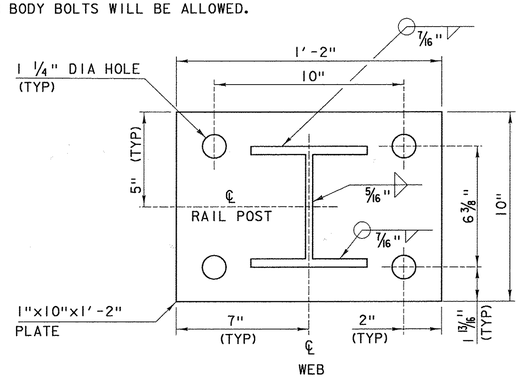


POST BASE PLATE

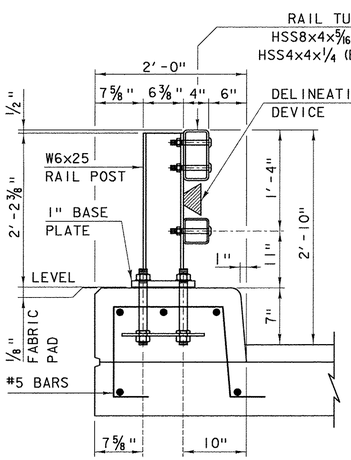


TYPICAL SECTION

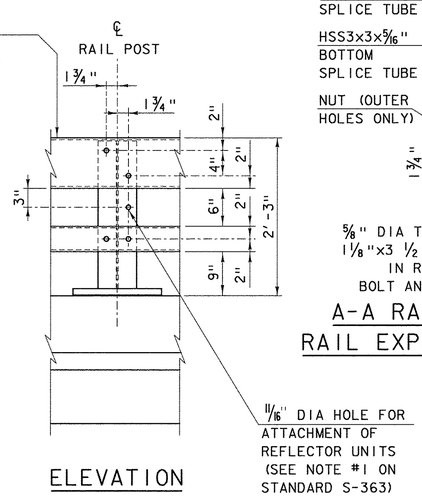


ELEVATION

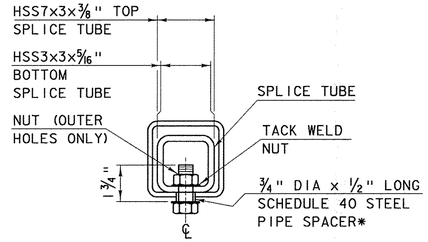


5/8" DIA TAPPED HOLE IN SPLICE TUBE
1 1/8"x3 1/2" SLOT* OR 3/4" DIA HOLE**
IN RAIL TUBE FOR 5/8" DIA
BOLT AND PLAIN HARDENED WASHER

A-A RAIL TUBE SPLICE AND RAIL EXPANSION JOINT SECTION

*EXPANSION JOINT
** SPLICE

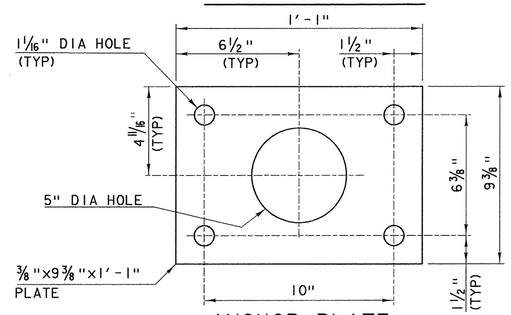


ANCHOR PLATE

## NOTES

1. ALL WORK AND MATERIALS SHALL CONFORM TO SECTION 525.
2. PRIOR TO GALVANIZING THE ASSEMBLED POST, GRIND ALL EDGES TO A MINIMUM RADIUS OF 1/16".
3. ALL POSTS SHALL BE SET NORMAL TO GRADE.
4. SECTIONS OF RAIL TUBE SHALL BE ATTACHED TO A MINIMUM OF TWO BRIDGE RAIL POSTS AND PREFERABLY TO AT LEAST FOUR POSTS.
5. RAIL TUBE EXPANSION JOINTS SHALL BE PROVIDED IN ANY RAIL BAY SPANNING THE END OF AN INTEGRAL ABUTMENT BRIDGE AND AT ALL SUPERSTRUCTURE EXPANSION JOINTS. EXPANSION JOINT WIDTH SHALL BE 4" AT 45°F AND WILL BE ADJUSTED IN THE FIELD BY THE ENGINEER FOR OTHER TEMPERATURES.
6. HOLES IN RAILS FOR RAIL TUBE ATTACHMENT MAY BE FIELD-DRILLED. HOLES SHALL BE COATED WITH AN APPROVED ZINC-RICH PAINT PRIOR TO INSTALLATION.
7. RAIL POST ANCHORING NUTS SHALL BE TIGHTENED TO A SNUG FIT AND GIVEN AN ADDITIONAL ONE-EIGHTH TURN.
8. RAIL TUBES SHALL BE ATTACHED USING 3/4" FULL DIAMETER BODY ASTM A 449 (TYPE I) ROUND HEAD BOLTS INSERTED THROUGH THE FACE OF THE TUBE. HOLES IN POSTS SHALL BE 1/16" LARGER THAN THE BOLT SIZE.
9. ANY BENDING OF RAIL SHALL BE DONE AT A FABRICATION PLANT ACCORDING TO A PROCEDURE PROVIDED BY THE FABRICATOR.
10. THE MINIMUM DISTANCE FROM THE POST TO AN EXPANSION JOINT SHALL BE DETERMINED BY THE MINIMUM EDGE DISTANCE OF 5" FROM ANY ANCHOR STUD TO THE END OF THE SLAB, OR TO THE EXPANSION JOINT RECESS POUR, IF ONE IS USED.
11. SEE STANDARD DRAWING G-1 FOR DETAILS OF DELINEATORS. A DELINEATOR SHALL BE INSTALLED AT 30 FOOT SPACING OR THE NEAREST POST. WHITE IS TO BE INSTALLED ON THE DRIVER'S RIGHT. FOR ONE WAY BRIDGES, YELLOW IS TO BE INSTALLED ON THE DRIVER'S LEFT. PAYMENT SHALL BE INCIDENTAL TO OTHER ITEMS.
12. THIS RAILING MEETS THE REQUIREMENTS FOR A TL-4 SERVICE LEVEL.

**OTHER STDS. REQUIRED:** **G-1**

REVISIONS AND CORRECTIONS

DECEMBER 14, 2009 - ORIGINAL APPROVAL DATE
APRIL 23, 2012 - GENERAL UPDATE 2012

APPROVED

Dr. Michael Hedges
STRUCTURES PROGRAM MANAGER

Richard Edmunds
DIRECTOR OF PROGRAM DEVELOPMENT

Mark D. Richter
FEDERAL HIGHWAY ADMINISTRATION

# BRIDGE RAILING, GALVANIZED 2 RAIL BOX BEAM

VERMONT AGENCY OF TRANSPORTATION

STANDARD
S-360A

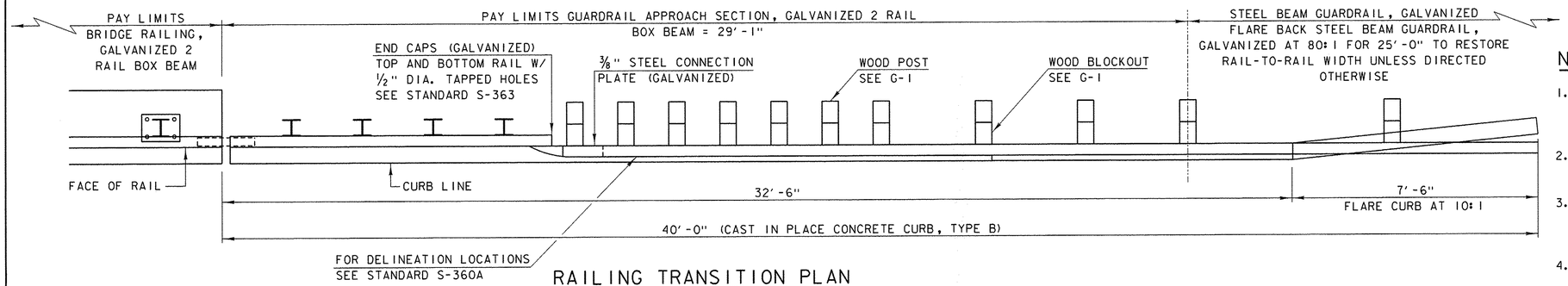


## RAILING TRANSITION PLAN

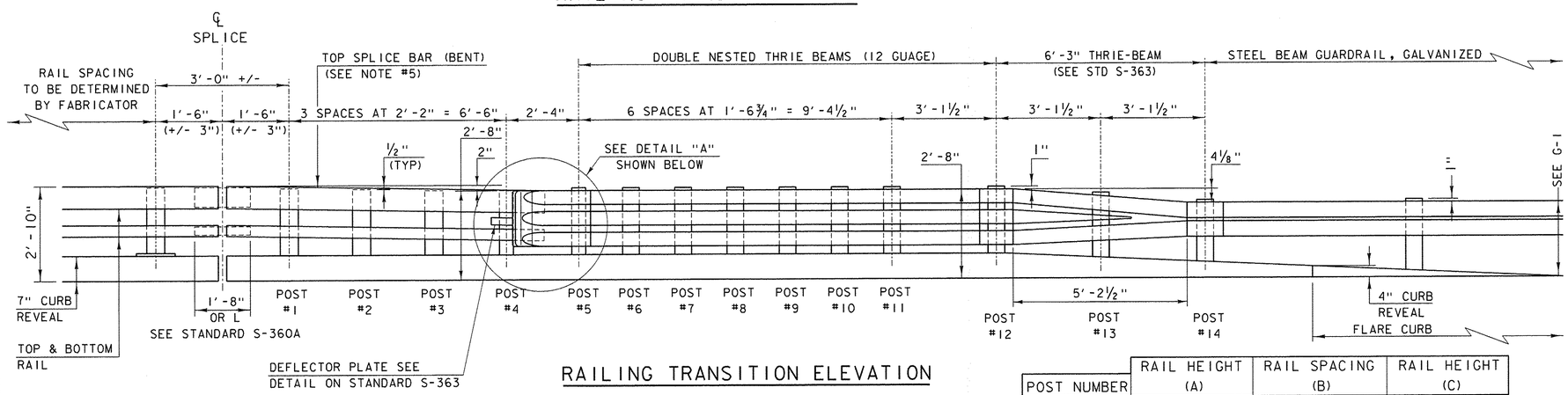


## RAILING TRANSITION ELEVATION

| POST NUMBER | RAIL HEIGHT (A) | RAIL SPACING (B) | RAIL HEIGHT (C) |
|---|---|---|---|
| 1 | 2'-9 1/2" | 1'-3 3/4" | 1'-5 3/4" |
| 2 | 2'-9" | 1'-3 1/2" | 1'-5 1/2" |
| 3 | 2'-8 1/2" | 1'-3 3/16" | 1'-5 5/16" |
| 4 | 2'-8" | 1'-2 7/8" | 1'-5 1/8" |

## NOTES

1. PAYMENT FOR GUARDRAIL APPROACH SECTION - GALVANIZED 2 RAIL BOX BEAM SHALL INCLUDE THE TERMINAL CONNECTOR, THE CONNECTION PLATE, THE DEFLECTOR PLATE, RAIL, POSTS, BLOCKS AND ATTACHMENT HARDWARE.
2. ALL APPROACH RAIL SPLICES SHALL BE LAPPED IN THE DIRECTION OF TRAFFIC FLOW.
3. TUBE AND STEEL POST MATERIALS, DIMENSION SIZES AND NOTES SHALL BE THE SAME AS THOSE OF THE BRIDGE RAIL, UNLESS OTHERWISE NOTED.
4. APPROACH RAIL BOLTS SHALL BE ASTM A307 GRADE A AND NUTS SHALL BE AASHTO M291 (ASTM A563 GRADE A OR BETTER) (GALVANIZED). WASHERS SHALL BE ASTM F844.
5. WELD TOP SPLICE BAR TO FIT BEND. USE COMPLETE PENETRATION WELD (B-U2).

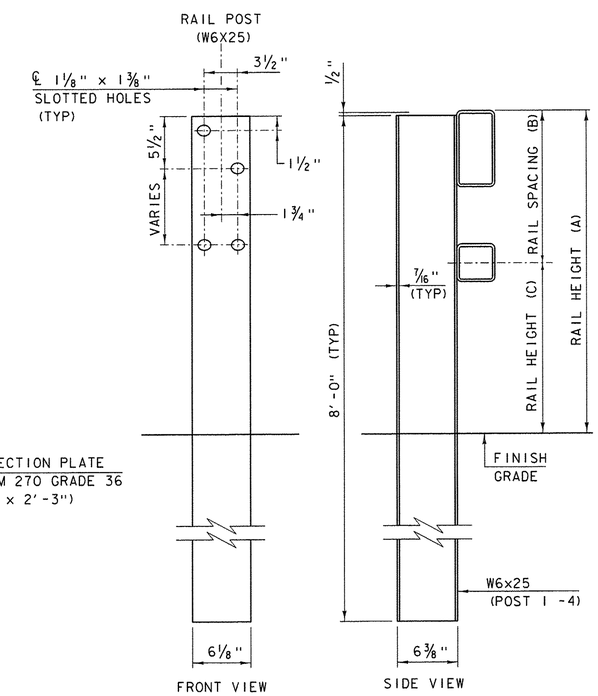


## RAIL POST SECTION (POSTS 1-4)

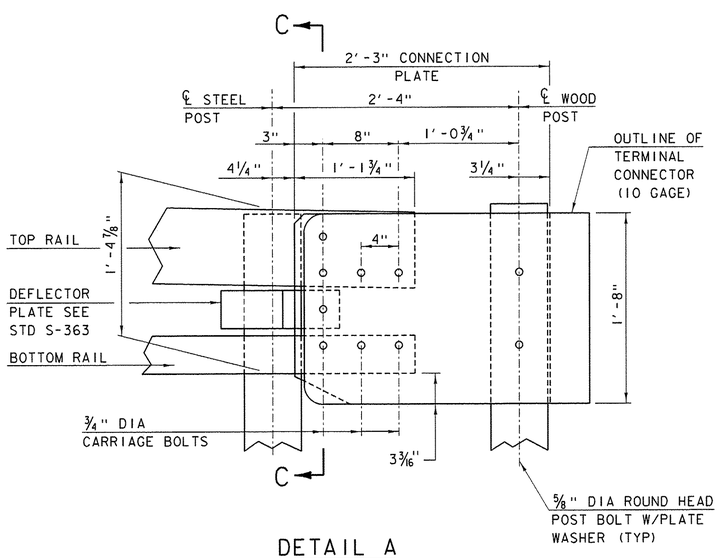


## DETAIL A

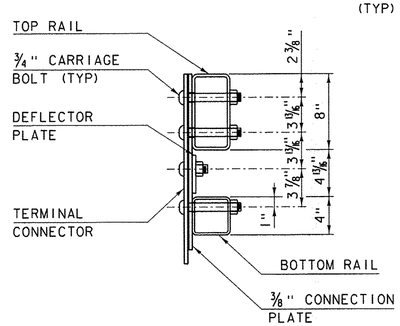


## SECTION C-C (CONNECTION PLATE)

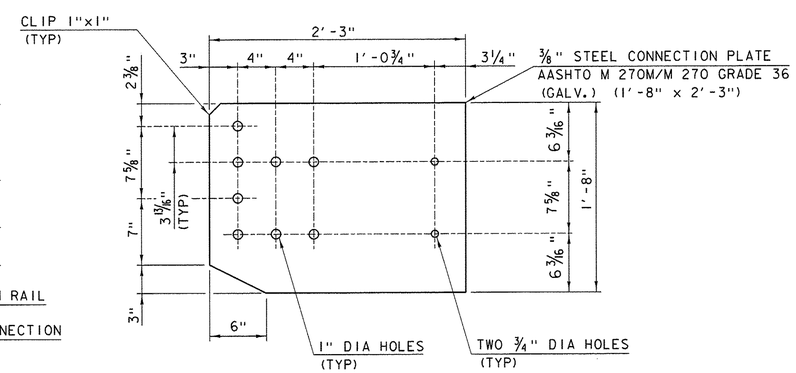


## CONNECTION PLATE

**OTHER STDS. REQUIRED:** **G-1, S-363**

| REVISIONS AND CORRECTIONS |
|---|
| DECEMBER 14, 2009 - ORIGINAL APPROVAL DATE |
| APRIL 23, 2012 - GENERAL UPDATE 2012 |

APPROVED

Wm. Michael Hedges
STRUCTURES ENGINEER

Richard Fahrney
DIRECTOR OF PROGRAM DEVELOPMENT

Mark D. Richter
FEDERAL HIGHWAY ADMINISTRATION

# GUARDRAIL APPROACH SECTION, GALVANIZED 2 RAIL BOX BEAM

VERMONT AGENCY OF TRANSPORTATION

STANDARD
# S-360B

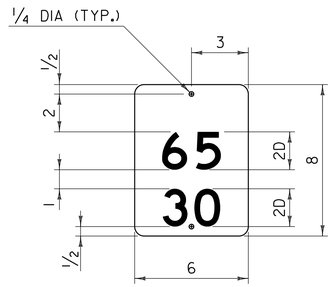


**INTERSTATE MILEPOST PLAQUE**

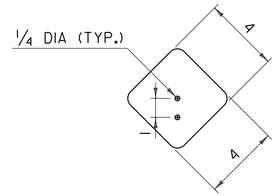


**TYPE I DELINEATOR**

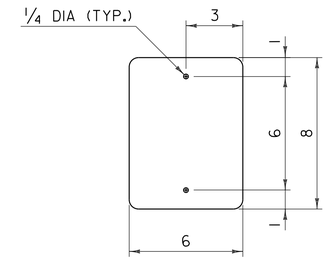


**TYPE II DELINEATOR**

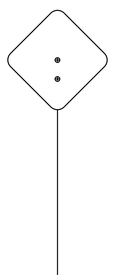

**TYPE I**

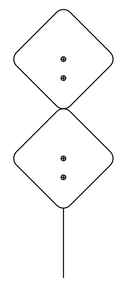

**TYPE I – U-TURNS**

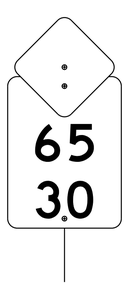


**WHITE TYPE I**
**WITH MILEPOST PLAQUE**

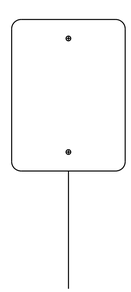

**TYPE II**

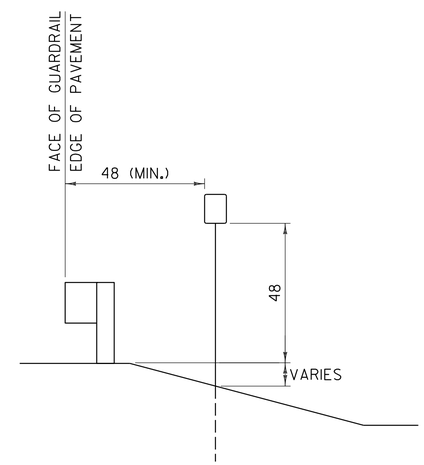


**INSTALLATION DETAIL***

• INSTALLATION DETAIL APPLICABLE TO ALL DELINEATOR ASSEMBLIES

## GENERAL NOTES:

1. THE FIRST LINE OF TEXT ON INTERSTATE MILEPOST PLAQUES INDICATES THE WHOLE NUMBER MILEAGE FROM THE BEGINNING OF A ROUTE. MILEAGE IS ALWAYS MEASURED TRAVELING FROM THE SOUTH TO NORTH OR FROM THE WEST TO EAST. THE ROUTE DIRECTION IS ESTABLISHED USING THE VERMONT AGENCY OF TRANSPORTATION (VAOT) ROUTE LOGS.
2. THE SECOND LINE OF TEXT ON INTERSTATE MILEPOST PLAQUES INDICATES THE ADDITIONAL MILEAGE, IN HUNDREDTHS, FROM THE BEGINNING OF A ROUTE. MILEAGE IS ALWAYS MEASURED TRAVELING FROM THE SOUTH TO NORTH OR FROM THE WEST TO EAST. THE ROUTE DIRECTION IS ESTABLISHED USING THE VAOT ROUTE LOGS.
3. THE INTERSTATE MILEPOST PLAQUE SHALL BE GREEN RETROREFLECTIVE LEGEND ON A WHITE RETROREFLECTIVE BACKGROUND AND SHALL HAVE RETROREFLECTIVE SHEETING EQUAL TO OR EXCEEDING "AMERICAN ASSOCIATION OF STATE HIGHWAY AND TRANSPORTATION OFFICIALS" (AASHTO) M 268 ["AMERICAN SOCIETY FOR TESTING AND MATERIALS" (ASTM) D 4956] TYPE III.
4. ALL LINES OF TEXT SHALL BE CENTERED HORIZONTALLY AND SHALL BE AS IDENTIFIED IN THE PLANS.
5. THE INTERSTATE MILEPOST PLAQUE AND DELINEATOR BASE MATERIAL SHALL BE 0.063 INCH FLAT SHEET ALUMINUM.
6. CORNERS SHALL BE ROUNDED TO A 1/2 INCH RADIUS.
7. A TYPE III DELINEATOR CONSISTS OF A TYPE I DELINEATOR FACING THE NORMAL DIRECTION OF TRAVEL AND A SINGLE RED TYPE I DELINEATOR FACING THE OPPOSITE DIRECTION. THE WHITE DELINEATOR AND RED DELINEATOR COMBINATION IS PLACED ON THE DRIVER'S RIGHT AND THE AMBER DELINEATOR AND RED DELINEATOR COMBINATION ON THE DRIVER'S LEFT.
8. DELINEATORS SHALL HAVE WHITE, GREEN, OR BLUE RETROREFLECTIVE SHEETING EQUAL TO OR EXCEEDING AASHTO M 268 ASTM D 4956 TYPE III, OR RED OR YELLOW RETROREFLECTIVE SHEETING EQUAL TO OR EXCEEDING AASHTO M 268 ASTM D 4956 TYPE VII, VIII, OR IX.
9. A SINGLE 14 GAGE, 1.75 INCH SQUARE STEEL POST AND 12 GAGE, TWO INCH SQUARE ANCHOR SHALL BE USED FOR INSTALLATION. THE ANCHOR SHALL BE A MINIMUM OF 30 INCHES IN LENGTH.
10. THE TOP OF POST SHALL BE ONE INCH ABOVE THE UPPER HOLE FOR ALL TYPE I DELINEATORS.
11. THE TOP OF POST SHALL BE FLUSH WITH THE TOP OF ALL TYPE II DELINEATORS.
12. ALL DIMENSIONS SHOWN IN INCHES.

**OTHER STDS. REQUIRED:** **T–45**

REVISIONS AND CORRECTIONS

JAN. 2, 2013 - ORIGINAL APPROVAL DATE

APPROVED

HIGHWAY SAFETY & DESIGN ENGINEER

DIRECTOR OF PROGRAM DEVELOPMENT

Mark D. Richter

FEDERAL HIGHWAY ADMINISTRATION

# DELINEATORS AND MILEPOSTS

VERMONT AGENCY OF TRANSPORTATION

STANDARD

T-40

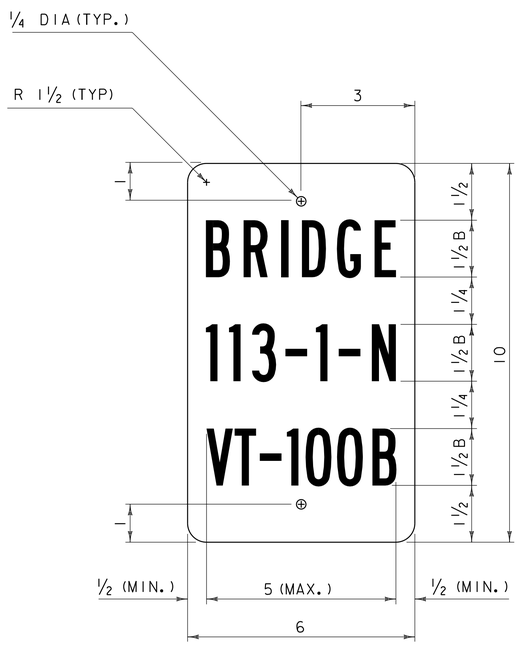


**VD-701**

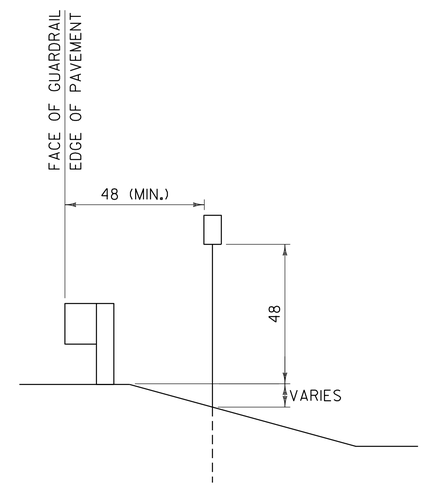


**VD-701 INSTALLATION DETAIL**

## GENERAL NOTES:

1. BRIDGE NUMBER PLAQUES ARE TO BE INSTALLED ALONG THE FEDERAL AID HIGHWAY SYSTEM INCLUDING ALL STATE HIGHWAYS AND TOWN HIGHWAYS ON THE FEDERAL AID HIGHWAY SYSTEM.
2. BRIDGE NUMBER PLAQUES SHALL BE LOCATED ON BOTH BRIDGE APPROACHES AT THE NEAREST VISIBLE LOCATION.
3. THE SIGN BASE MATERIAL SHALL BE 0.063 INCH FLAT SHEET ALUMINUM.
4. THE SIGN SHALL BE WHITE RETROREFLECTIVE LEGEND ON A GREEN RETROREFLECTIVE BACKGROUND, BOTH SHALL HAVE RETROREFLECTIVE SHEETING EQUAL TO OR EXCEEDING "AMERICAN ASSOCIATION OF STATE HIGHWAY AND TRANSPORTATION OFFICIALS" (AASHTO) M 268 ["AMERICAN SOCIETY FOR TESTING AND MATERIALS" (ASTM) D 4956] TYPE III.
5. THE SECOND LINE OF TEXT INDICATES THE BRIDGE NUMBER. THE BRIDGE NUMBER CAN BE OBTAINED USING THE VERMONT AGENCY OF TRANSPORTATION (VAOT) ROUTE LOGS OR BY CONSULTING WITH THE VAOT STRUCTURES SECTION.
6. THE THIRD LINE OF TEXT INDICATES THE STATE ROUTE NUMBER. IN ALL CASES THIS WILL BE DEPICTED USING THE LETTER ABBREVIATION, FOLLOWED BY A HYPHEN, FOLLOWED BY THE ROUTE NUMBER. FOR EXAMPLE US ROUTE 2 WOULD BE IDENTIFIED USING US-2.
7. THE SECOND AND THIRD LINES OF TEXT SHALL BE CENTERED HORIZONTALLY AND SHALL BE AS DEFINED IN THE PLANS.
8. A SINGLE 14 GAGE, 1.75 INCH SQUARE STEEL POST AND 12 GAGE, TWO INCH SQUARE ANCHOR SHALL BE USED FOR INSTALLATION. THE ANCHOR SHALL BE A MINIMUM OF 30 INCHES IN LENGTH.
9. ALL DIMENSIONS SHOWN IN INCHES.

**OTHER STDS. REQUIRED:** **T-45**

REVISIONS AND CORRECTIONS

APRIL 9, 2014 - ORIGINAL APPROVAL DATE

APPROVED

HIGHWAY SAFETY & DESIGN ENGINEER

DIRECTOR OF PROGRAM DEVELOPMENT

Mark D. Richter

FEDERAL HIGHWAY ADMINISTRATION

# BRIDGE NUMBER PLAQUE

VERMONT AGENCY OF TRANSPORTATION

STANDARD

T-42

## POST AND ANCHOR SELECTION CHART

| POST SIZE (IN.) | POST THICKNESS (IN.) | POST WEIGHT (LBS/FT.) | POST GAGE | SECTION MODULUS ($IN.^3$) | ONE POST SV | TWO POST SV | THREE POST SV | POSTS PERMITTED IN 8' PATH | ANCHOR SIZE (IN.) | ANCHOR GAGE | MINIMUM ANCHOR LENGTH |
|---|---|---|---|---|---|---|---|---|---|---|---|
| 1.75 | .083 | 1.88 | 14 | 0.222 | 45 | 90 | 135 | TWO | 2.00 | 12 | 30 |
| 2.00 | .109 | 2.42 | 12 | 0.393 | 80 | 160 | 240 | TWO | 2.25 | 12 | 48 |
| 2.50 | .109 | 3.35 | 12 | 0.673 | 137 | 274 | 411 | ONE | 3.00 | 7 | 48 |

### NOTES:

1. ALL SIGN POSTS SHALL HAVE 7/16 INCH HOLES EVERY ONE INCH ON CENTER (ALL FOUR SIDES).
2. THE NUMBER OF SIGN POSTS PERMITTED WITHIN AN EIGHT FOOT PATH ASSUMES THAT THE SIGN ASSEMBLY IS NOT PROTECTED BY GUARDRAIL OR IS LOCATED WITHIN A GUARDRAIL'S DEFLECTION DISTANCE DETERMINED PER THE CURRENT "AMERICAN ASSOCIATION OF STATE HIGHWAY AND TRANSPORTATION OFFICIALS" (AASHTO) ROADSIDE DESIGN GUIDE. ADDITIONAL POSTS MAY BE INSTALLED USING SLIP BASES THAT MEET "NATIONAL COOPERATIVE HIGHWAY RESEARCH PROGRAM" (NCHRP) REPORT 350 OR THE AASHTO "MANUAL FOR ASSESSING SAFETY HARDWARE" (MASH). THE APPROPRIATE RESOURCE SHALL BE DETERMINED AS DESCRIBED IN THE MASH PUBLICATION.
3. TO USE THE SELECTION VALUE (SV) COLUMNS IN THE TABLE ABOVE, MULTIPLY A SIGN'S SURFACE AREA IN SQUARE FEET (H x L) BY THE SIGN'S HEIGHT IN FEET MEASURED FROM THE GROUND TO THE CENTROID OF THE SIGN ASSEMBLY (h). THIS RESULT MUST BE LESS THAN OR EQUAL TO THE CORRESPONDING SELECTION VALUE. NOTE THAT FOR SIGNS WITH MULTIPLE POSTS, THE LARGEST HEIGHT DIMENSION SHALL BE USED TO CALCULATE THE POST SELECTION VALUE.
4. THE DESIGN CRITERIA UTILIZED IN SIGN POST AND ANCHOR SELECTION IS AS FOLLOWS: WIND SPEED OF 70 MPH (10 YEAR MEAN RECURRENCE INTERVAL), WIND PRESSURE OF 19 PSF, STEEL MINIMUM YIELD OF 55,000 PSI, AND AN ALLOWABLE STRESS OF 1.4 (0.60 FY).

## CORNER BOLT INSTALLATION DETAIL

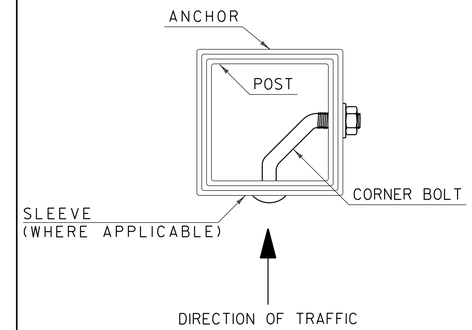


### NOTES:

1. CORNER BOLTS SHALL BE 5/16 INCH DIAMETER WITH 18 THREADS PER INCH AND DIMENSIONS SHALL BE DETERMINED BASED ON THE OUTERMOST DIMENSION OF THE SLEEVE, ANCHOR OR POST. THREAD EXPOSURE MUST EXCEED THE CORRESPONDING NUT WIDTH. THE CORNER BOLT AND CORRESPONDING HARDWARE SHALL BE ZINC PLATED, MEETING OR EXCEEDING THE REQUIREMENTS OF THE "AMERICAN SOCIETY FOR TESTING AND MATERIALS" (ASTM) A307.

## SLEEVE /ANCHOR INSTALLATION DETAIL

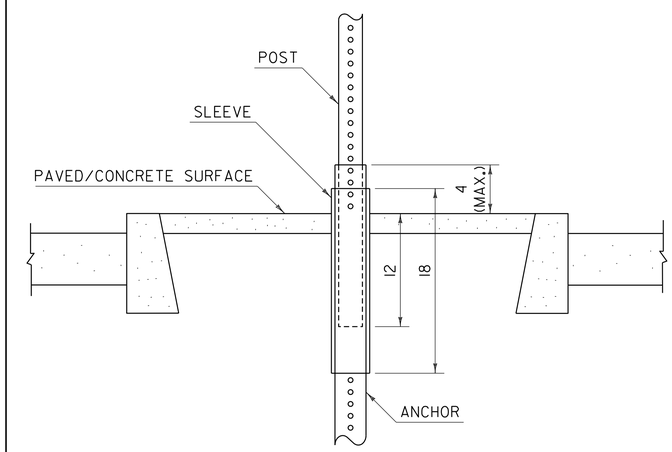


### NOTES:

1. A SLEEVE SHALL BE INSTALLED FOR SIGN INSTALLATIONS IN CONCRETE OR PAVEMENT.
2. THE SLEEVE SHALL BE 18 INCHES MINIMUM IN LENGTH.
3. THREE INCH SLEEVES THAT DO NOT HAVE HOLES WILL REQUIRE THAT 7/16 INCH HOLES ARE DRILLED TO FACILITATE CONNECTIONS.
4. REFER TO CURRENT EDITION OF THE "VERMONT AGENCY OF TRANSPORTATION STANDARD SPECIFICATIONS FOR CONSTRUCTION" FOR MATERIAL REQUIREMENTS.

## POST SPACING DETAILS

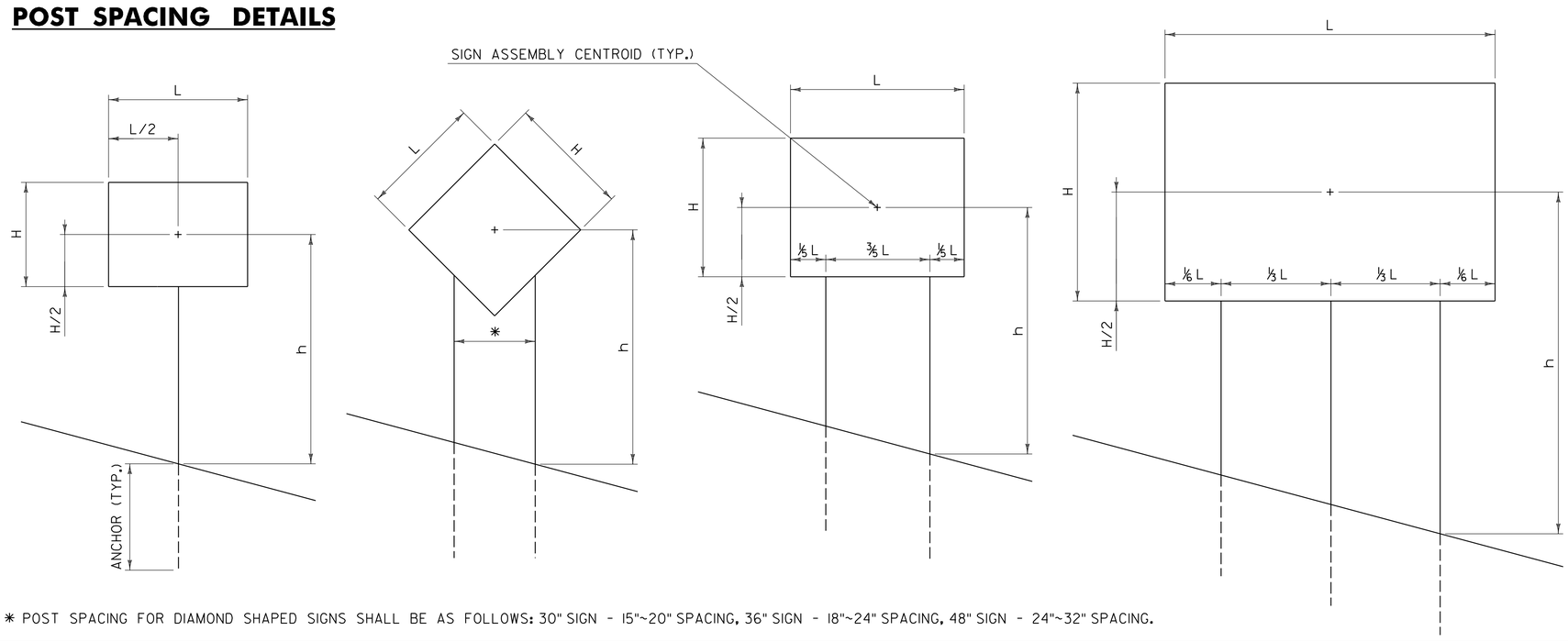


* POST SPACING FOR DIAMOND SHAPED SIGNS SHALL BE AS FOLLOWS: 30" SIGN - 15"~20" SPACING, 36" SIGN - 18"~24" SPACING, 48" SIGN - 24"~32" SPACING.

### GENERAL NOTES:

1. ALL SQUARE TUBE STEEL POSTS AND ANCHORS SHALL BE FORMED INTO A SIZE AND SHAPE IN SUCH A MANNER THAT NEITHER FLASH NOR WELD SHALL INTERFERE WITH THE TELESCOPING PROPERTIES, NOR DAMAGE THE GALVANIZING.
2. ANCHORS MAY BE DRIVEN OR SET INTO A DUG HOLE AND BACKFILLED. IF DRIVEN, A DRIVING CAP SHALL BE USED. THE DUG HOLE INSTALLATION METHOD SHALL BE UTILIZED IN AREAS WITH POOR SOIL CONDITIONS OR AS DIRECTED BY THE ENGINEER. BACKFILL SHALL BE COMPACTED AS DIRECTED BY THE ENGINEER.
3. THE TOPS OF SIGN POSTS SHALL BE AT OR NEAR THE TOP OF SIGN. THE POST SHALL NOT EXTEND ABOVE THE TOP OF SIGN.
4. SIGN POSTS SHALL BE INSTALLED A MINIMUM OF ONE FOOT BELOW GROUND, INSIDE THE ANCHOR. THE LENGTH OF ANCHOR EXPOSED ABOVE GROUND SHALL NOT EXCEED FOUR INCHES.
5. ALL DIMENSIONS SHOWN IN INCHES.

**OTHER STDS. REQUIRED:** **NONE**

REVISIONS AND CORRECTIONS

JAN. 2, 2013 - ORIGINAL APPROVAL DATE

APPROVED

HIGHWAY SAFETY & DESIGN ENGINEER

DIRECTOR OF PROGRAM DEVELOPMENT

Mark D. Richter

FEDERAL HIGHWAY ADMINISTRATION

# SQUARE TUBE SIGN POST AND ANCHOR

VERMONT AGENCY OF TRANSPORTATION

STANDARD

T-45