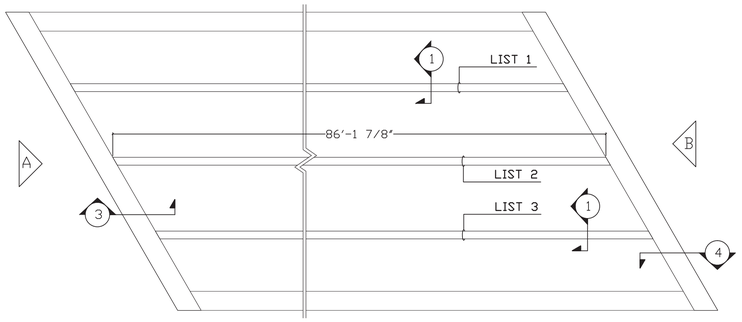

DECK PLAN

REF: DECK PLAN/17 of 39

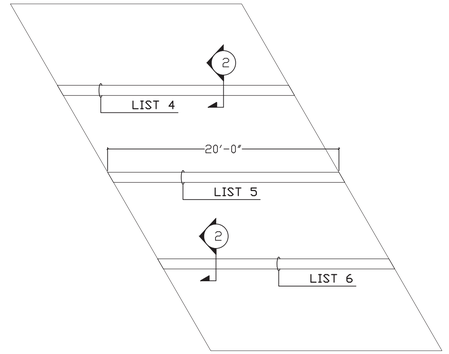

APPROACH SLAB #1 PLAN

REF: APPROACH SLAB VIEW #1 PLAN VIEW/20 of 39

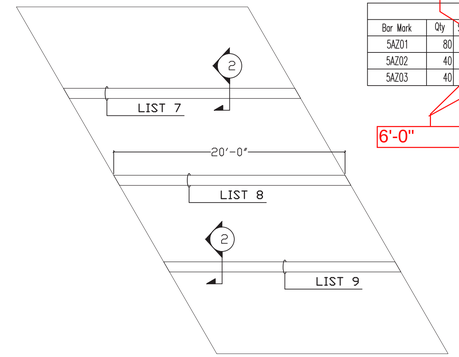

APPROACH SLAB #2 PLAN

REF: APPROACH SLAB VIEW #1 PLAN VIEW/20 of 39

8'-0"

1'-8"

BEND SCHEDULE

Bar Mark	Qty	Size	Total Length	Type	'A'	'B'	'C'	'D'	'E'	'F'	'G'	'H'	'J'	'K'	'O'	'R'
5AZ01	80	#5	8'-7"	17		3'-2"	2'-3"	3'-2"								
5AZ02	40	#5	6'-10"	17		2'-0"	2'-10"	2'-0"								
5AZ03	40	#5	6'-8"	17		2'-0"	2'-8"	2'-0"								

6'-0"

2'-3"

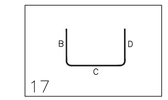

LIST 1 86'-1 7/8"
"A" 4x3 #4 X 30'-0" (Z)
4x1 #4 X 3'-7" (Z)
LIST 2 86'-1 7/8"
"A" 4x3 #4 X 30'-0" (Z)
4x1 #4 X 3'-7" (Z)
LIST 3 86'-1 7/8"
"A" 4x3 #4 X 30'-0" (Z)
4x1 #4 X 3'-7" (Z)

LIST 4 20'-0"
"B" 4 #5 X 19'-8" (Z)
LIST 5 20'-0"
"B" 4 #5 X 19'-8" (Z)
LIST 6 20'-0"
"B" 4 #5 X 19'-8" (Z)
LIST 7 20'-0"
"B" 4 #5 X 19'-8" (Z)
LIST 8 20'-0"
"B" 4 #5 X 19'-8" (Z)
LIST 9 20'-0"
"B" 4 #5 X 19'-8" (Z)

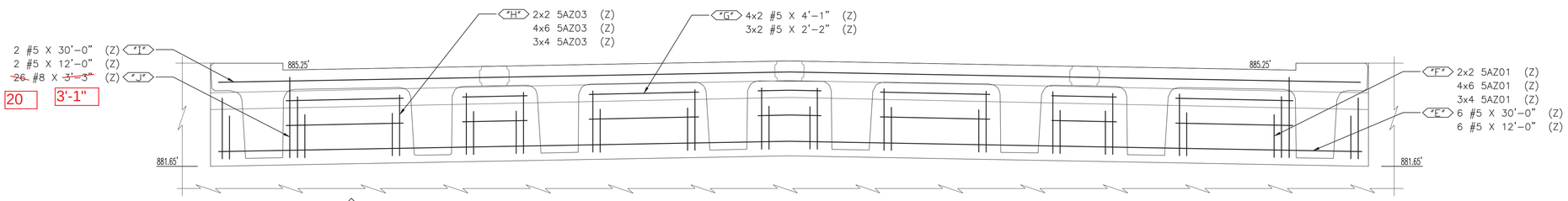

WALL ELEVATION B

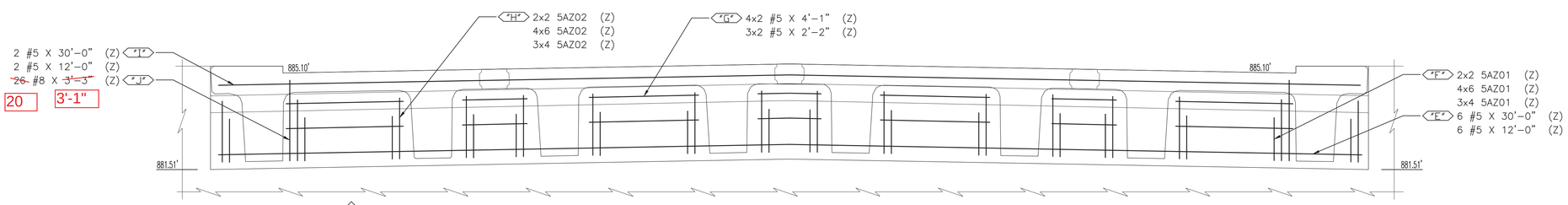

WALL ELEVATION A

NOTE: ALL REINFORCING ON THIS DRAWING IS DUAL COATED.

LEGEND:
CONT.-CONTINUOUS
TRANS.-TRANSVERSE
DWLS.-DOWELS
VERTS.-VERTICAL
HORIZ.-HORIZONTAL
T&B -TOP & BOTTOM
I.F.-INNER FACE
O.F.-OUTER FACE
E.E.-EACH END
E.F.-EACH FACE
F.F.-FRONT FACE
R.F.-REAR FACE
E.W.-EACH WAY
O.C.-ON CENTER
L.W.-LONG WAY
S.W.-SHORT WAY

TENSION LAP SPLICE LENGTHS	
#4	2'-7"
#5	2'-7"

FOR APPROVAL

ELEVATIONS & DIMENSIONS SHOWN ON THIS DWG. ARE FOR REINF. DETAILING PURPOSES ONLY AND ARE NOT INTENDED FOR CONSTRUCTION.

REINF. BARS ASTM A1055 (Z) BAR DUAL COATED BAR DENOTED (Z).

VERIFICATION OF UNCLEAR INFORMATION MAY BE REQUESTED ON THIS DRAWING. SHOULD VERIFICATION BE LEFT UNADDRESSED IT WILL REMAIN AS SHOWN AND ASSUME CORRECT.

CONTRACTOR/ENGINEER PLEASE VERIFY QUANTITY AND DIMENSIONS.

Vermont Agency of Transportation
RECEIVED
Barnard ER BRF 0241 (26) - Rebar Shop Drawing - Rev1_ApprovedAsNoted.pdf
CK'D BY KF OK'D BY WL
January 31, 2014
RESUBMIT NO Approved AsNoted
BY KH DATE 2-6-2014

PLEASE PROVIDE DELIVERY ADDRESS.

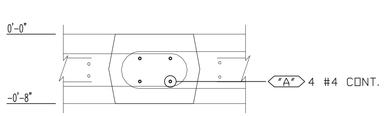

SECTION 1

REF: CONNECTION DETAIL/18 of 39

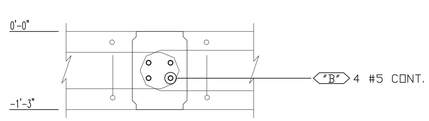

SECTION 2

REF: CONNECTION DETAIL/18 of 39

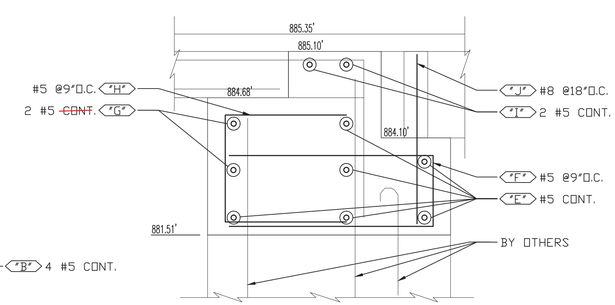

SECTION 3

REF: REINFORCING TYP./25 of 39

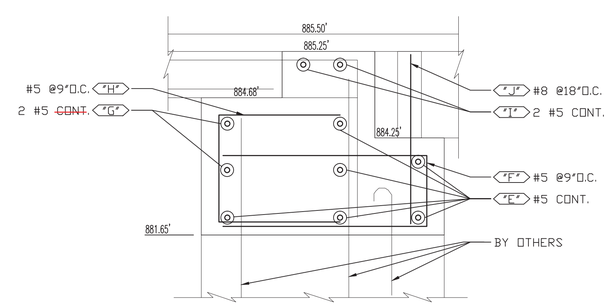

SECTION 4

REF: REINFORCING TYP./25 of 39

	DATE	REV.#	SENT FOR
6			
5			
4			
3			
2	1/30/14	1	REVISE AND RESUBMIT/FOR APPROVAL
1	12/31/13	–	APPROVAL

DIMENSION
DIMENSION FABRICATORS INC.
2000 7TH STREET
SCOTIA, N.Y. 12302
PH: (518) 374-1936
FAX (518) 374-4830
www.dimensionfabricators.com

STRUCTURE	BARNARD
LOCATION	
ARCHITECT	
ENGINEER	VERMONT AGENCY OF TRANSPORTATION
CUSTOMER	MILLER CONSTRUCTION
DRAWN BY ASHLEE	DATE 12/31/13
DFI #	8702
DRAWING COVERS	APPROACH SLAB AND DECK SLAB CONNECTION JOINT REINFORCING
DRAWING #	A