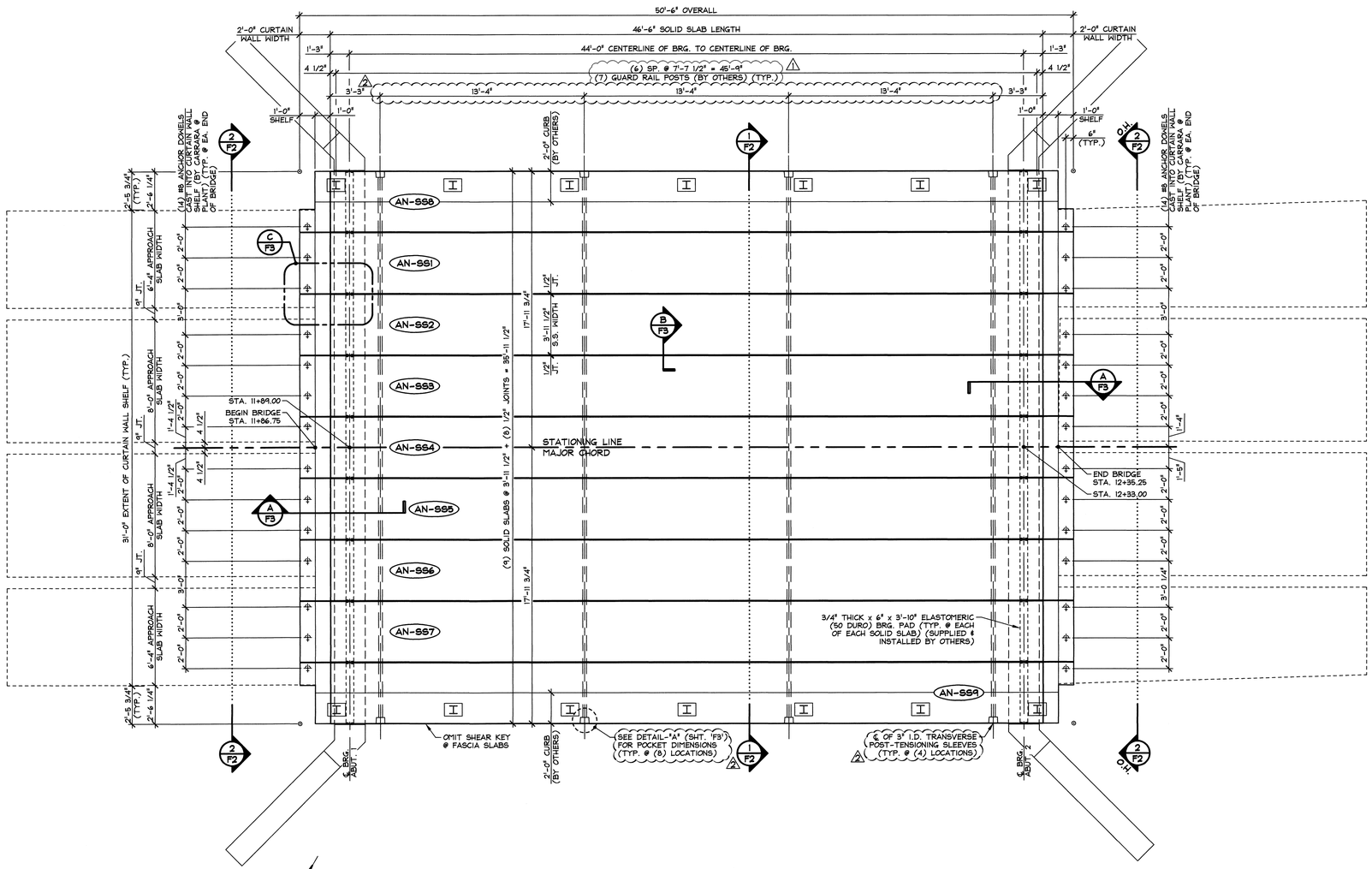

1/F1 PRESTRESSED SOLID SLAB LAYOUT WITH PRECAST CURTAIN WALLS

1/4" = 1'-0"

VOIDED SLAB GENERAL NOTES

1. MIN. CONCRETE STRENGTH AT 28 DAYS SHALL BE 6,000 PSI.
2. MIN. CONCRETE STRENGTH AT STRESS TRANSFER SHALL BE 4,000 PSI.
3. REINFORCING STEEL SHALL BE GR-60, ASTM A-615 (AASHTO M31) LEVEL 1 (EPOXY COATED).
4. PRESTRESSING STRANDS SHALL CONFORM TO ASTM A-416 (AASHTO M203) AND SHALL CONSIST OF 0.60"ø x 270 KSI 7-WIRE LOW RELAXATION STRANDS.
5. PRESTRESSING STRANDS SHALL EACH BE PULLED TO HAVE A NET TENSION OF 44.0 K AFTER ACCOUNTING FOR CHUCK SLIPPAGE. TENSION SHALL BE VERIFIED BY MEASURING STRAND ELONGATION. (SEE EXAMPLE ELONGATION CALCULATION AND TENSIONING PROCEDURE, THIS SHEET.)
6. ENDS OF PRESTRESSING STRANDS SHALL BE CUT FLUSH WITH END OF SOLID SLABS USING AN ABRASIVE WHEEL (UNLESS NOTED OTHERWISE) AND TWO PART EPOXY PAINTED.
7. ALL EXPOSED CORNERS SHALL BE CHAMFERED 3/4".
8. THE TOP OF SLABS SHALL RECEIVE A SMOOTH FLOAT FINISH (UNLESS NOTED OTHERWISE).
9. SHEAR KEY SURFACES SHALL BE SAND BLASTED CLEAN.
10. SLABS SHALL BE HANDLED AND ERECTED USING THE LIFTING LOOPS ONLY. RIGGING SHALL BE CONFIGURED SUCH THAT EQUAL FORCES ARE APPLIED TO EACH OF THE TWO LIFTING LOOPS AT EACH END OF THE SLAB. THE MINIMUM SLING ANGLE FROM THE HORIZONTAL SHALL BE 60°. **THE PINS OF THE SHACKLES SHALL BE PLACED THROUGH THE LIFTING LOOPS. SEE DETAIL, SHEET "F3".** SLABS SHALL BE STORED AND TRANSPORTED WITH TIMBER SUPPORTS WITHIN 2'-0" OF THE SLAB ENDS, UNLESS APPROVED BY J.P. CARRARA & SONS, INC.

    ONCE SLABS HAVE BEEN ERECTED, CUT LIFTING LOOPS AT RECESS, EPOXY PAINT AND PATCH AS REQUIRED (BY OTHERS).
11. MATERIAL SPECIFICATION AND MIX DESIGN SHALL CONFORM TO VERMONT SPEC. P510.02 AND P510.05 RESPECTIVELY.

    DESIGN MIX: J.P.C. BRIDGE MIX #425M (NO DCI)
12. QUALITY CONTROL PROCEDURES ARE IN ACCORDANCE WITH PCI REQUIREMENTS. J.P. CARRARA & SONS, INC. IS A PCI CERTIFIED PLANT.
13. CURING METHOD: AS SOON AS THE TOP OF SLAB IS FINISHED, A COVER OF INSULATED POLY. THE DESIRED CURING TEMPERATURE RANGE SHALL NOT DROP BELOW 70°F. THE TEMPERATURE SHALL BE RECORDED BY AUTOMATIC SENSOR INSTRUMENTS ON GRAPH CHARTS, SPACED NOT MORE THAN 100' APART AND WILL CONTINUE UNTIL RELEASE STRENGTH IS ACHIEVED. EACH CHART SHALL BE MARKED WITH THE CASTING DATED AND LOCATION OF THE RECORDER. IF NECESSARY TO MAINTAIN CASTING BED TEMPERATURE PRIOR TO CONCRETE PLACEMENT OR TO ACCELERATE EARLY AGE STRENGTH GAIN, EXTERNAL RADIANT HEAT MAY BE EMPLOYED VIA HOT WATER DUCTS BENEATH AND WITHIN THE PERIPHERY OF THE CASTING BED. MAXIMUM CURING TEMPERATURE SHALL NOT EXCEED PCI SPECIFIED LIMITS.
14. TRANSVERSE POST-TENSIONING SEQUENCE:
    A. ERECT SOLID SLABS, AND POST-TENSION TENDONS TO APPROXIMATELY 3,000 LBS.
    B. GROUT SHEAR KEYS (BY OTHERS).
    C. ONCE SHEAR KEY GROUT HAS ATTAINED A MINIMUM COMPRESSIVE STRENGTH OF 1,500 PSI; POST-TENSION TENDONS TO 44,000 LBS.
    D. EXCESS TENDON LENGTH SHALL BE CUT USING AN ABRASIVE WHEEL.
    E. APPLY TWO PART EPOXY TO EXPOSED TENDON AND CHUCK (BY OTHERS).
15. OWNER SHALL PROVIDE APPROPRIATE WATERPROOFING TO GROUTED SHEAR KEYS. J.P. CARRARA & SONS, INC. SHALL NOT BE HELD LIABLE FOR PROBLEMS ASSOCIATED WITH MOISTURE INFILTRATING GROUTED SHEAR KEYS.

EXAMPLE PRESTRESSING STRAND ELONGATION CALC. AND TENSIONING

(NOT TO BE USED FOR CONSTRUCTION)

SIZE & GRADE: 0.60"ø x 270 KSI
AREA: 0.217 IN^2
TENSION: 44,000 LB. EACH STRAND
GRIP-TO-GRIP: 184'-0" = 184.00'
Es = 28,600,000 PSI (ASSUMED FOR THESE CALCULATIONS; VALUE TO BE OBTAINED FOR STRAND SPOOL ACTUALLY USED)

EXAMPLE:

$$\Delta = \frac{PL}{AE} = \frac{(44{,}000 - 3{,}000) \times 184.00 \times 12}{0.217 \times 28{,}600{,}000} = 14.983"$$

THEREFORE: (TOLERANCES ± 5%)
△ UPPER LIMIT = 1.05 x 14.983" = 15.73" = 15 3/4"
△ LOWER LIMIT = 0.95 x 14.983" = 14.23" = 14 1/4"

EXTRA FORCE REQUIRED TO COMPENSATE FOR 1/2" CHUCK SLIPPAGE:

$$\Delta P = \frac{0.5 \times 41{,}000}{14.983} = 1{,}368 \text{ LBS.}$$

TOTAL TENSIONING FORCE = 44,000 + 1,368 = 45,368 LBS.

STRAND TENSIONING PROCEDURE:

1. PULL EACH STRAND INITIALLY TO 3,000# LBS. AND MARK STRAND.
2. THEN PULL EACH STRAND TO A TOTAL TENSION OF 45,368# LBS. AND MEASURE ELONGATION AFTER SEATING. IT MUST BE BETWEEN 14 1/4"# AND 15 3/4"#.

    # NOTE: FORCES READ ON STRESSING JACK GAUGES MUST BE MADE TO CORRESPOND TO ABOVE VALUES BASED ON CALIBRATION DATA FOR SPECIFIC JACK USED.

DESIGN LIVE LOAD: HL-93

△2 6-9-15 REVISE POST-TENSIONING
△1 6-1-15 REVISED AS NOTED

APPROVAL STAMP:
FOR DESIGN AND FABRICATION

STATE OF VERMONT — WOLDERWOLD — LICENSED PROFESSIONAL ENGINEER

DATE 6/10/15

J.P. CARRARA & SONS INC.
Precast & Prestress Manufacturer
2464 CASE STR., MIDDLEBURY, VERMONT 05753 Phone:(802)388-6361 Fax:(802)388-9010

RENAUD BROS, INC.
CONTRACTOR
VERNON, VERMONT

STATE OF VERMONT AGENCY OF TRANSPORTATION
COUNTY OF WINDSOR

TOWN OF ANDOVER
VT RTE 11, RURAL MINOR ARTERIAL
BRIDGE NO.: 41 PROJECT NO.: BHF 016-1(29)

PRESTRESSED SOLID SLAB LAYOUT

DATE: MAY 6, 2015	
SCALE: NOTED	
CHKD: J.C.	DFTM: B.L.
JOB NO: 23465-015	
DWG. NO: F1	

Vermont Agency of Transportation
RECEIVED
ON: June 10, 2015
and Checked for
CONFORMANCE
BY: D. PETERSON DATE: 06/11/2015

F:\VT-Bridges\23465-15 Andover 41\23465-F1.dwg, 6/9/2015 3:01:55 PM

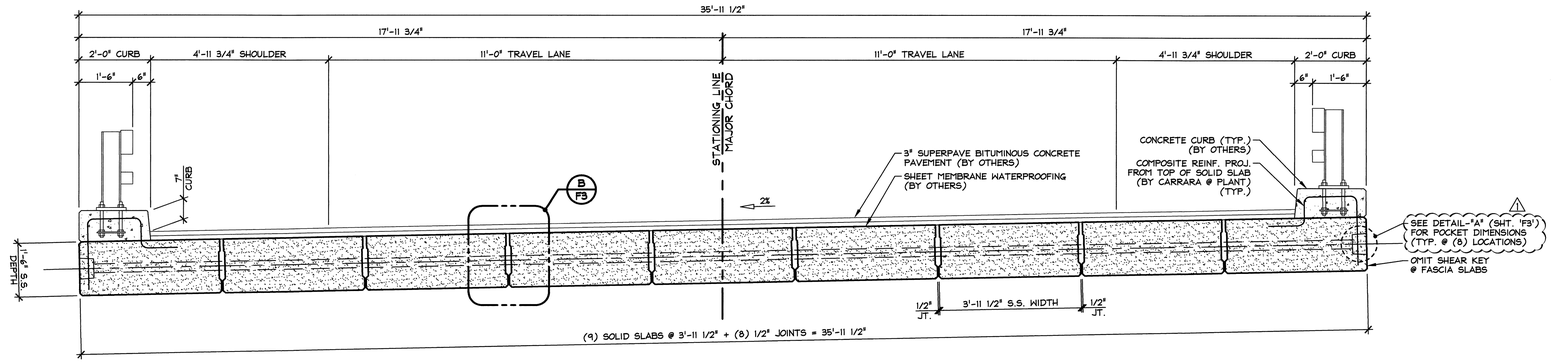

1/F2 TRANSVERSE SOLID SLAB SECTION

1/2" = 1'-0"

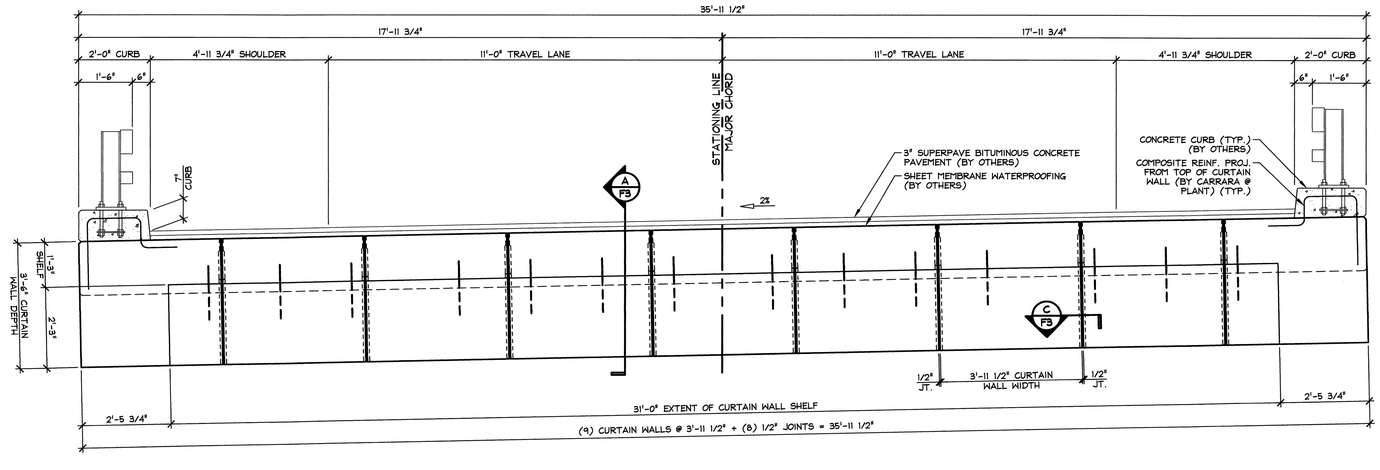

2/F2 CURTAIN WALL ELEVATION

1/2" = 1'-0"

Vermont Agency of Transportation

RECEIVED

ON: June 10, 2015

and Checked for

CONFORMANCE

BY: D. PETERSON DATE: 06/11/2015

⚠ 6-9-15 REVISED AS NOTED

APPROVAL STAMP:
FOR DESIGN AND FABRICATION

STATE OF VERMONT — BRIAN C. SALDERMCCOY — NO. 9911 — LICENSED PROFESSIONAL ENGINEER

DATE 6/10/15

J.P. CARRARA & SONS INC.
Precast & Prestress Manufacturer
2464 CASE STR., MIDDLEBURY, VERMONT 05753 Phone:(802)388-6361 Fax:(802)388-9010

RENAUD BROS, INC.
CONTRACTOR
VERNON, VERMONT

STATE OF VERMONT AGENCY OF TRANSPORTATION
COUNTY OF WINDSOR

TOWN OF ANDOVER
VT RTE 11, RURAL MINOR ARTERIAL
BRIDGE NO.: 41 PROJECT NO.: BHF 016-1(29)

TRANSVERSE SECTION &
CURTAIN WALL ELEVATION

DATE:	MAY 6, 2015
SCALE:	NOTED
CHKD: J.C.	DFTM: B.L.
JOB NO:	23465-015
DWG. NO:	F2

F:\VT-Bridges\23465-15 Andover 41\23465-F2.dwg, 6/9/2015 3:02:54 PM

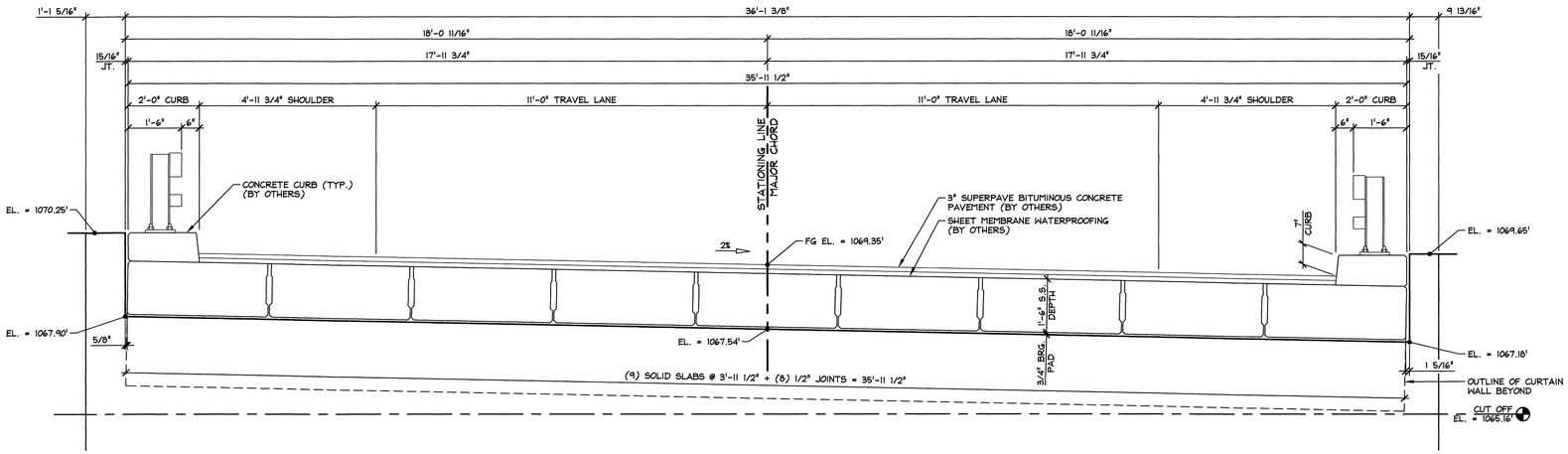

1 / F2.1 ABUTMENT NO. 1 PARTIAL ELEVATION

1/2" = 1'-0"

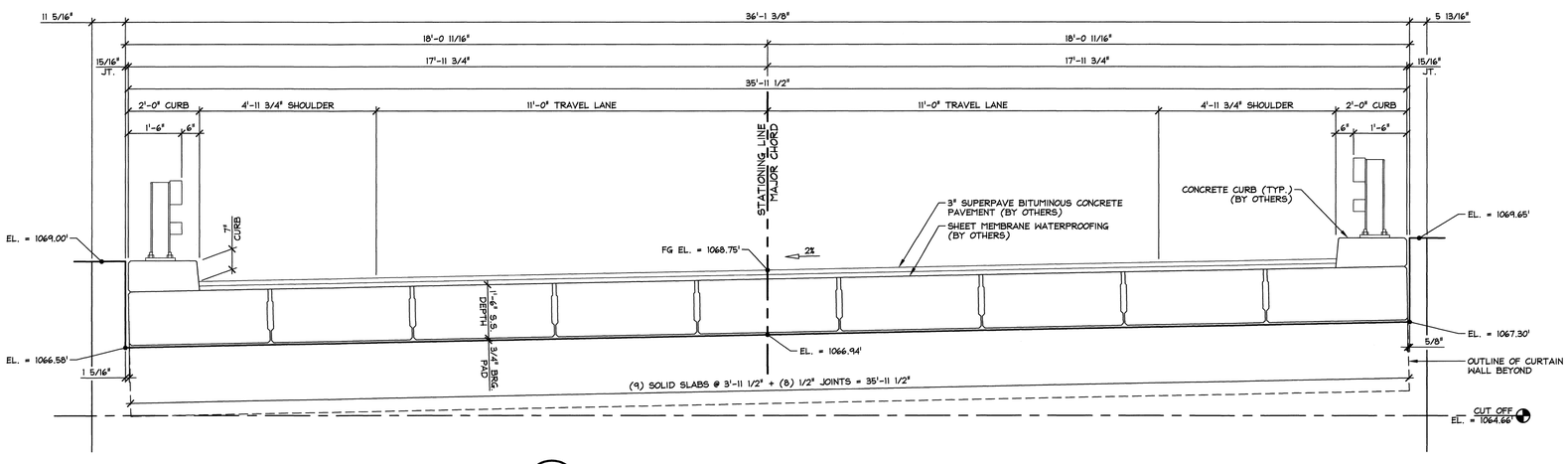

2 / F2.1 ABUTMENT NO. 2 PARTIAL ELEVATION

1/2" = 1'-0"

Vermont Agency of Transportation

Andover BHF 016-1 (29) - Precast Beams Reviewed 06-10-15

RECEIVED

ON: June 10, 2015

and Checked for

CONFORMANCE

BY: D. PETERSON DATE: 06/11/2015

△1 6-1-15 GENERAL REVISIONS

APPROVAL STAMP:
FOR DESIGN AND FABRICATION

STATE OF VERMONT — WILLIAM SALDERWOOD — NO. 11 — LICENSED — PROFESSIONAL ENGINEER

DATE 6/10/15

J.P. CARRARA & SONS INC.
Precast & Prestress Manufacturer
2464 CASE STR., MIDDLEBURY, VERMONT 05753 Phone:(802)388-6361 Fax:(802)388-9010

RENAUD BROS, INC.
CONTRACTOR
VERNON, VERMONT

STATE OF VERMONT AGENCY OF TRANSPORTATION
COUNTY OF WINDSOR

TOWN OF ANDOVER
VT RTE 11, RURAL MINOR ARTERIAL
BRIDGE NO.: 41 PROJECT NO.: BHF 016-1(29)

PARTIAL ABUTMENT ELEVATIONS

DATE: MAY 6, 2015	
SCALE: NOTED	
CHKD: J.C.	DFTM: B.L.
JOB NO: 23465-015	
DWG. NO: F2.1	

F:\VT-Bridges\23465-15 Andover 41\23465-F2-1.dwg, 6/9/2015 3:03:47 PM

Vermont Agency of Transportation

RECEIVED

ON: June 10, 2015

and Checked for

CONFORMANCE

BY: D. PETERSON DATE: 06/11/2015

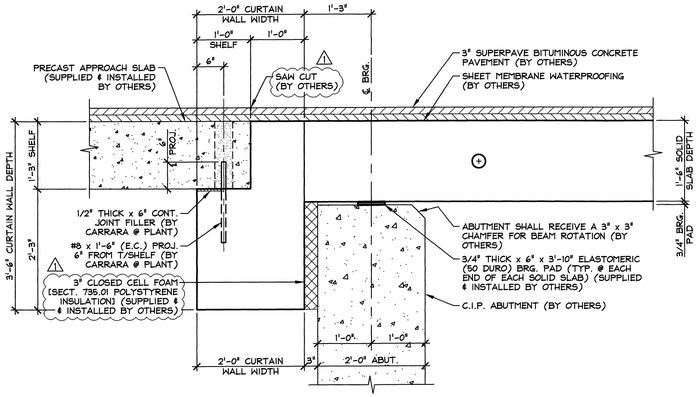

A F3 BEARING SECTION

SOLID SLAB PROJECTING REINFORCING AND CURTAIN WALL REINFORCING NOT SHOWN FOR CLARITY

3/4" = 1'-0"

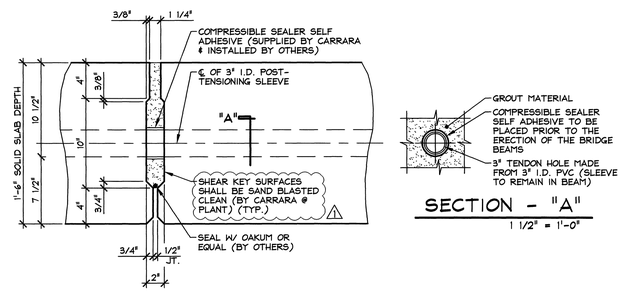

SECTION - "A"

1 1/2" = 1'-0"

B F3 SOLID SLAB SHEAR KEY SECTION @ P.T. SLEEVE

1 1/2" = 1'-0"

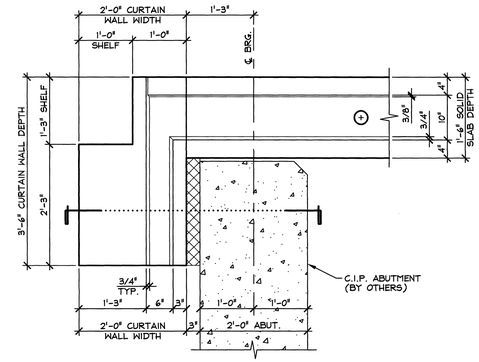

SHEAR KEY ELEVATION

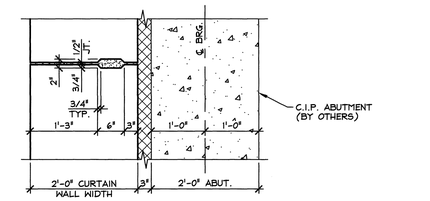

SHEAR KEY PLAN

C F3 CURTAIN WALL SHEAR KEY DETAILS

3/4" = 1'-0"

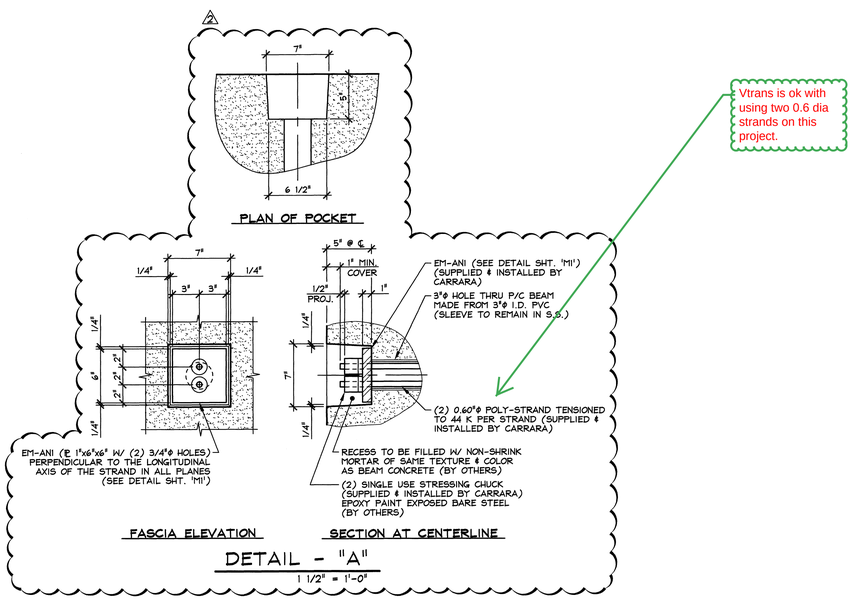

DETAIL - "A"

1 1/2" = 1'-0"

Vtrans is ok with using two 0.6 dia strands on this project.

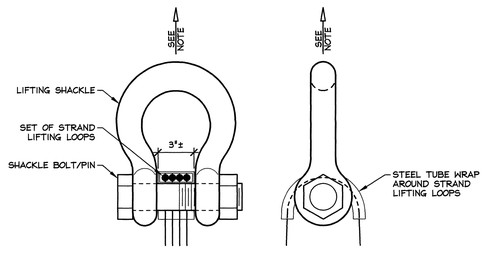

NOTE: SOLID SLABS SHALL BE HANDLED AND ERECTED USING THE LIFTING LOOPS ONLY. RIGGING SHALL BE CONFIGURED SUCH THAT EQUAL FORCES ARE APPLIED TO EACH SET OF LIFTING LOOPS AT EACH END OF THE SLAB. THE MINIMUM SLING ANGLE FROM THE HORIZONTAL SHALL BE 60°. SHACKLE BOLT/PIN SHALL BE PLACED UNDER LIFT LOOPS AS SHOWN. DESIGN AND CONFIGURATION OF RIGGING BY PURCHASER.

LIFTING SHACKLE DETAILS

N.T.S.

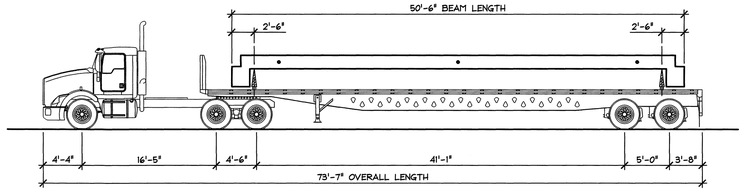

SHIPPING DETAIL

N.T.S.

2 6-9-15 REVISE POST-TENSIONING

1 6-1-15 REVISED AS NOTED

APPROVAL STAMP:
FOR DESIGN AND FABRICATION

STATE OF VERMONT ERIC GOLDENBERG NO. 9111 LICENSED PROFESSIONAL ENGINEER

DATE 6/10/15

J.P. CARRARA & SONS INC.
Precast & Prestress Manufacturer
2464 CASE STR., MIDDLEBURY, VERMONT 05753 Phone:(802)388-6361 Fax:(802)388-9010

RENAUD BROS, INC.
CONTRACTOR
VERNON, VERMONT

STATE OF VERMONT AGENCY OF TRANSPORTATION
COUNTY OF WINDSOR

TOWN OF ANDOVER
VT RTE 11, RURAL MINOR ARTERIAL
BRIDGE NO.: 41 PROJECT NO.: BHF 016-1(29)

SUPERSTRUCTURE DETAILS

DATE:	MAY 6, 2015
SCALE:	NOTED
CHKD: J.C.	DFTM: B.L.
JOB NO:	23465-015
DWG. NO:	F3

F:\VT-Bridges\23465-15 Andover 4\123465-F3.dwg, 6/9/2015 3:06:10 PM

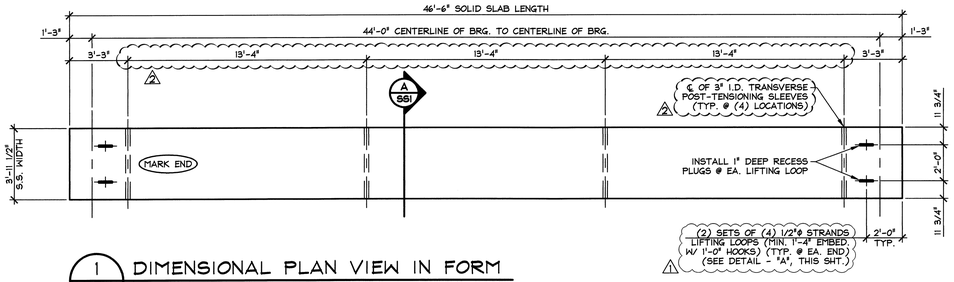

1 SS1 DIMENSIONAL PLAN VIEW IN FORM
1/4" = 1'-0"

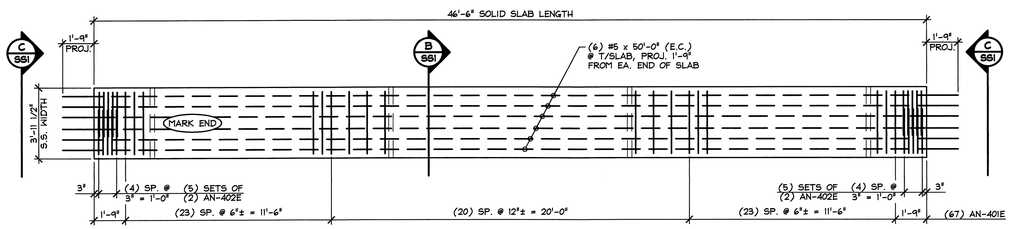

2 SS1 REINFORCING PLAN VIEW IN FORM
1/4" = 1'-0"

SHOP NOTE:
ADJUST REINFORCING AS REQUIRED TO CLEAR POST-TENSIONING SLEEVES.

Vermont Agency of Transportation
RECEIVED
ON: June 10, 2015
and Checked for
CONFORMANCE
BY: D. PETERSON DATE: 06/11/2015

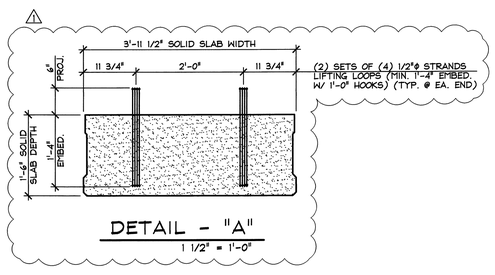

DETAIL - "A"
1 1/2" = 1'-0"

DETENSIONING SCHEDULE
N.T.S.

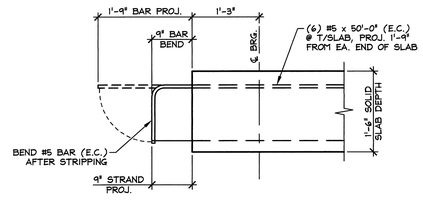

D SS1 PROJ. STRAND & BAR BEND DETAIL
3/4" = 1'-0"

MARK:	QTY.:	WT.:	VOL.:
AN-SS1	1	20.27 T	10.01 cy
AN-SS2	1	20.27 T	10.01 cy
AN-SS3	1	20.27 T	10.01 cy
AN-SS4	1	20.27 T	10.01 cy
AN-SS5	1	20.27 T	10.01 cy
AN-SS6	1	20.27 T	10.01 cy
AN-SS7	1	20.27 T	10.01 cy

MATERIAL LIST / SOLID SLAB

ITEM	MARK	DESCRIPTION	QTY./SLAB
1	AN-401E	#4 BENT BAR (LEVEL 1, EPOXY COATED)	67
2	AN-402E	#4 BENT BAR (LEVEL 1, EPOXY COATED)	20
3	AN-403E	#4 BENT BAR (LEVEL 1, EPOXY COATED)	8
4	AN-404E	#4 BENT BAR (LEVEL 1, EPOXY COATED)	4
5			
6		#5 x 50'-0" (LEVEL 1, EPOXY COATED)	6
7			
8			
9		SET OF (4) 1/2"ϕ STRAND LIFTING LOOPS	4
10			

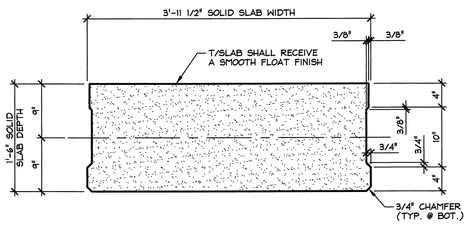

A SS1 DIMENSIONAL SECTION
1" = 1'-0"

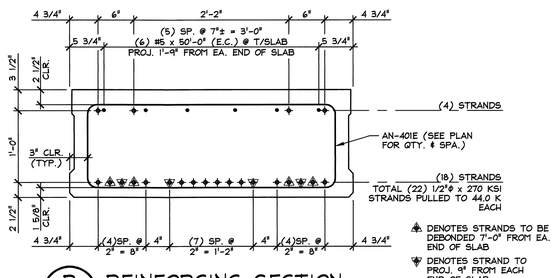

DENOTES STRANDS TO BE DEBONDED 7'-0" FROM EA. END OF SLAB

DENOTES STRAND TO PROJ. 9" FROM EACH END OF SLAB

B SS1 REINFORCING SECTION @ MID-SPAN
1" = 1'-0"

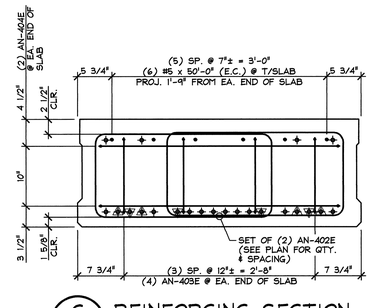

C SS1 REINFORCING SECTION @ SLAB END
1" = 1'-0"

6-9-15 REVISE POST-TENSIONING
6-1-15 REVISED AS NOTED

APPROVAL STAMP:
FOR DESIGN AND FABRICATION

STATE OF VERMONT ERIC J. GOLDENWOOD NO. 9203 LICENSED PROFESSIONAL ENGINEER

DATE 6/10/15

J.P. CARRARA & SONS INC.
Precast & Prestress Manufacturer
2464 CASE STR., MIDDLEBURY, VERMONT 05753 Phone:(802)388-6361 Fax:(802)388-9010

RENAUD BROS, INC.
CONTRACTOR
VERNON, VERMONT

STATE OF VERMONT AGENCY OF TRANSPORTATION
COUNTY OF WINDSOR

TOWN OF ANDOVER
VT RTE 11, RURAL MINOR ARTERIAL
BRIDGE NO.: 41 PROJECT NO.: BHF 016-1(29)

PRESTRESSED SOLID SLAB DETAILS

DATE: MAY 6, 2015
SCALE: NOTED
CHKD: J.C. DFTM: B.L.
JOB NO: 23465-015
DWG. NO: SS1

F:\VT-Bridges\23465-15 Andover 41\23465-SS1.dwg, 6/9/2015 3:07:56 PM

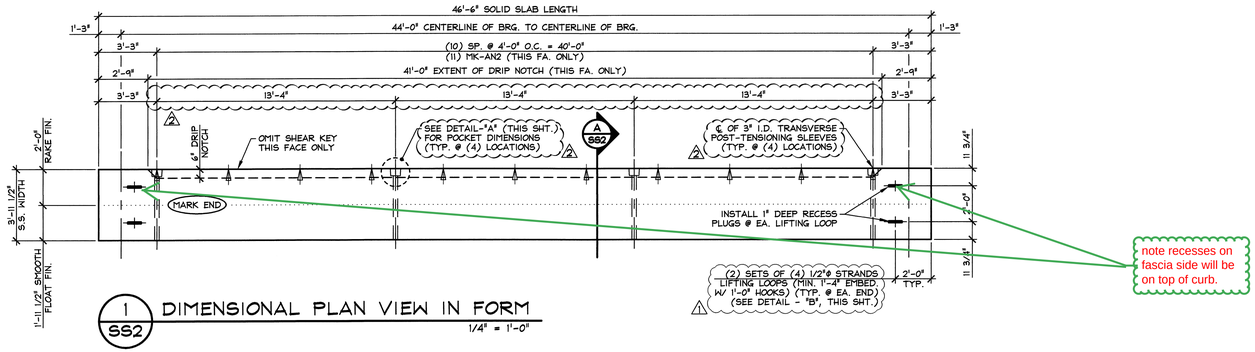

note recesses on fascia side will be on top of curb.

1 SS2 DIMENSIONAL PLAN VIEW IN FORM
1/4" = 1'-0"

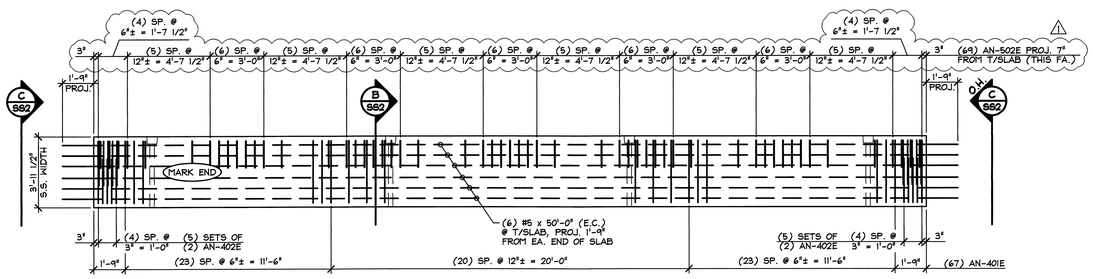

2 SS2 REINFORCING PLAN VIEW IN FORM
1/4" = 1'-0"

SHOP NOTE:
ADJUST REINFORCING AS REQUIRED TO CLEAR POST-TENSIONING SLEEVES AND POCKETS.

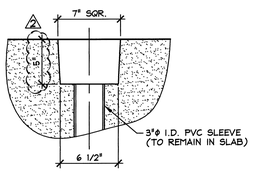

DETAIL - "A"
1 1/2" = 1'-0"

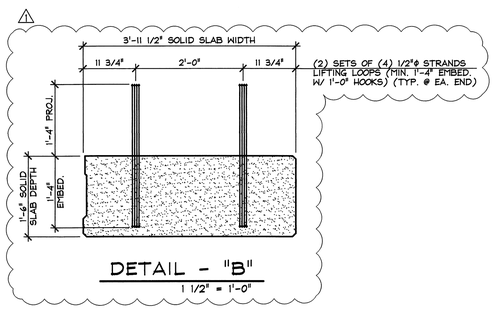

DETAIL - "B"
1 1/2" = 1'-0"

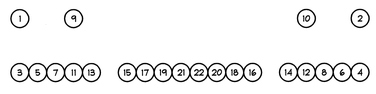

DETENSIONING SCHEDULE
N.T.S.

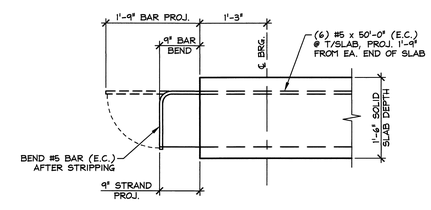

D SS2 PROJ. STRAND & BAR BEND DETAIL
3/4" = 1'-0"

MARK:	AN-SS8	QTY.: 1	WT.: 20.48 T	VOL.: 10.11 cy
MARK:	AN-SS9	QTY.: 1	WT.: 20.48 T	VOL.: 10.11 cy

MATERIAL LIST / SOLID SLAB

ITEM	MARK	DESCRIPTION	QTY./SLAB
1	AN-401E	#4 BENT BAR (LEVEL 1, EPOXY COATED)	67
2	AN-402E	#4 BENT BAR (LEVEL 1, EPOXY COATED)	20
3	AN-403E	#4 BENT BAR (LEVEL 1, EPOXY COATED)	8
4	AN-404E	#4 BENT BAR (LEVEL 1, EPOXY COATED)	4
5			
6	AN-502E	#5 BENT BAR (LEVEL 1, EPOXY COATED)	69
7		#5 x 50'-0" (LEVEL 1, EPOXY COATED)	6
8			
9	MK-AN2	DAYTON C-24 TYPE 4-APR DECK FORM HANGER (GALV.)	11
10		SET OF (4) 1/2"ϕ STRAND LIFTING LOOPS	4

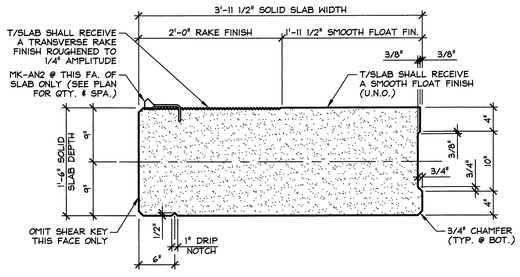

A SS2 DIMENSIONAL SECTION
1" = 1'-0"

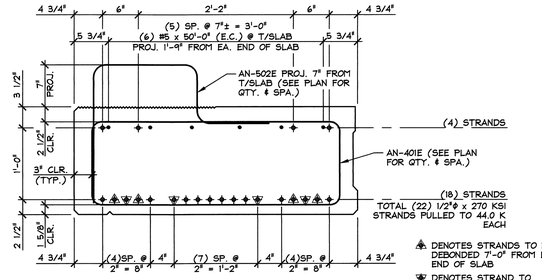

B SS2 REINFORCING SECTION @ MID-SPAN
1" = 1'-0"

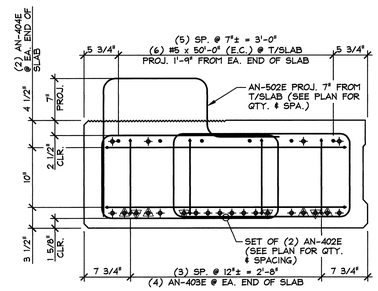

C SS2 REINFORCING SECTION @ SLAB END
1" = 1'-0"

△2 6-9-15 REVISE POST-TENSIONING
△1 6-1-15 REVISED AS NOTED

APPROVAL STAMP:
FOR DESIGN AND FABRICATION

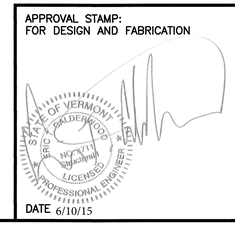

DATE 6/10/15

J.P. CARRARA & SONS INC.
Precast & Prestress Manufacturer
2464 CASE STR., MIDDLEBURY, VERMONT 05753 Phone:(802)388-6361 Fax:(802)388-9010

RENAUD BROS, INC.
CONTRACTOR
VERNON, VERMONT

STATE OF VERMONT AGENCY OF TRANSPORTATION
COUNTY OF WINDSOR

TOWN OF ANDOVER
VT RTE 11, RURAL MINOR ARTERIAL
BRIDGE NO.: 41 PROJECT NO.: BHF 016-1(29)

PRESTRESSED SOLID SLAB DETAILS

DATE: MAY 6, 2015
SCALE: NOTED
CHKD: J.C. DFTM: B.L.
JOB NO: 23465-015
DWG. NO: SS2

Vermont Agency of Transportation
RECEIVED
ON: June 10, 2015
and Checked for
CONFORMANCE
BY: D. PETERSON DATE: 06/11/2015

F:\VT-Bridges\23465-15 Andover 41\23465-SS2.dwg, 6/9/2015 3:10:30 PM

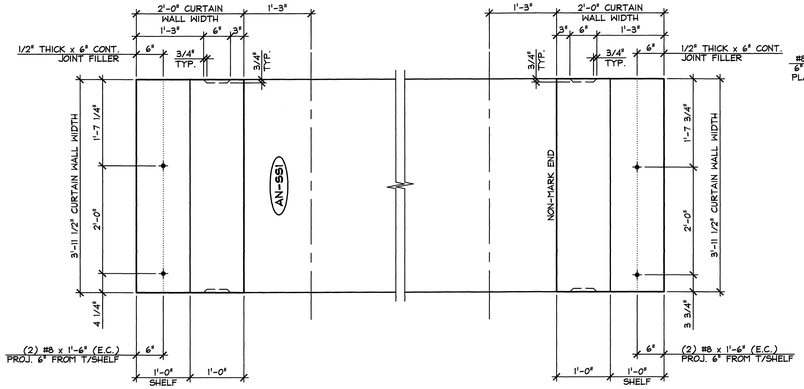

1 CW1 DIMENSIONAL PLAN VIEW IN FORM
3/4" = 1'-0"

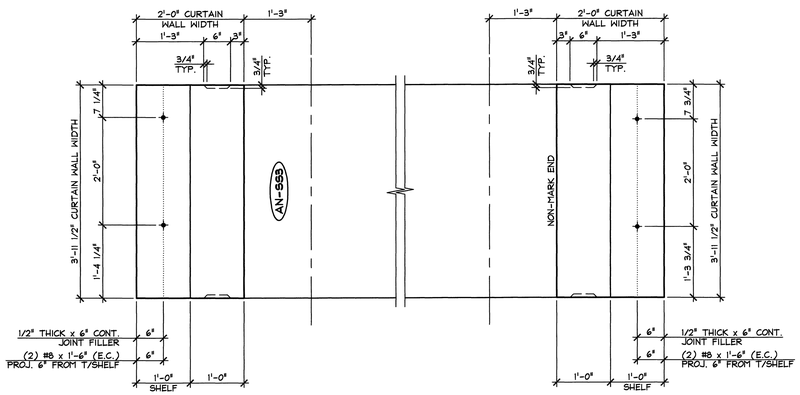

2 CW1 DIMENSIONAL PLAN VIEW IN FORM
3/4" = 1'-0"

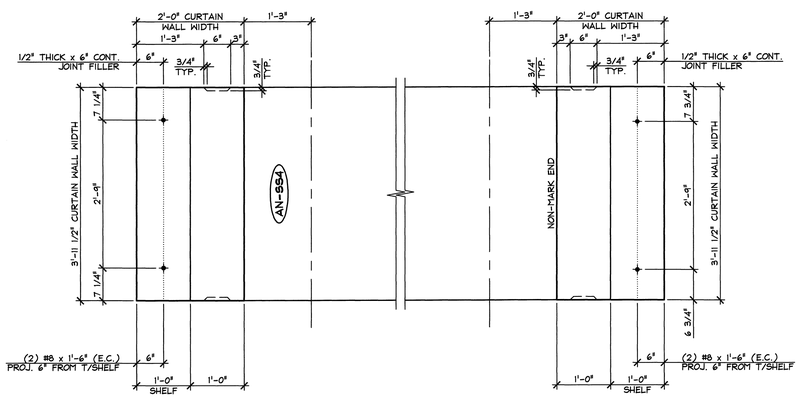

3 CW1 DIMENSIONAL PLAN VIEW IN FORM
3/4" = 1'-0"

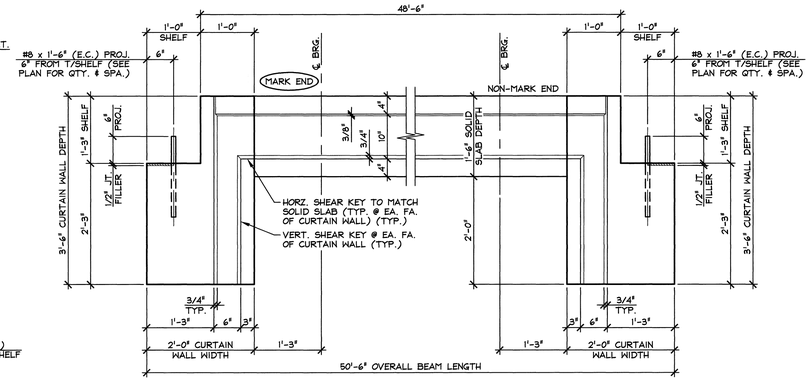

4 CW1 DIMENSIONAL ELEVATION
3/4" = 1'-0"

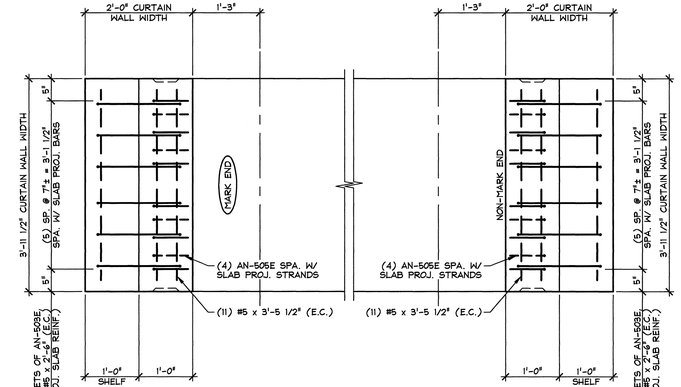

5 CW1 REINFORCING PLAN VIEW IN FORM
3/4" = 1'-0"

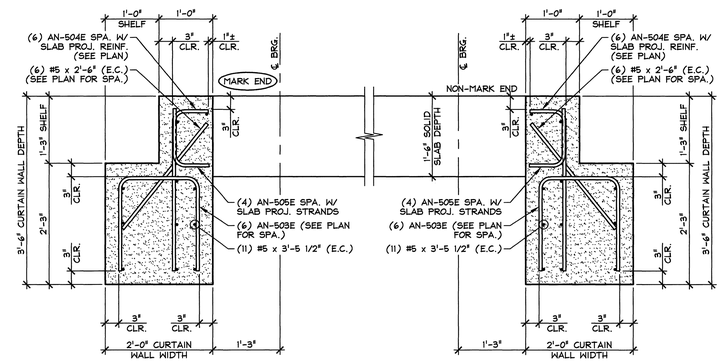

6 CW1 REINFORCING SECTION
3/4" = 1'-0"

MARK:	AN-SS1	QTY.:	1
MARK:	AN-SS3	QTY.:	1
MARK:	AN-SS4	QTY.:	1

SHOP NOTE:
TOP OF CURTAIN WALL SHALL RECEIVE A FINISH MATCHING SOLID SLAB.

10.01 cy = SOLID SLAB
0.84 cy = CURTAIN WALL (MARK END)
0.84 cy = CURTAIN WALL (NON-MARK END)
11.69 cy = TOTAL SLAB VOL.

20.27 T = SOLID SLAB
1.71 T = CURTAIN WALL (MARK END)
1.71 T = CURTAIN WALL (NON-MARK END)
23.69 T = TOTAL SLAB WT.

MATERIAL LIST / CURTAIN WALL

ITEM	MARK	DESCRIPTION	QTY./CURTAIN WALL	
			MARK END	NON-MARK END
1	AN-503E	#5 BENT BAR (LEVEL 1, EPOXY COATED)	6	6
2	AN-504E	#5 BENT BAR (LEVEL 1, EPOXY COATED)	6	6
3	AN-505E	#5 BENT BAR (LEVEL 1, EPOXY COATED)	4	4
4		#5 x 2'-6" (LEVEL 1, EPOXY COATED)	6	6
5		#5 x 3'-5 1/2" (LEVEL 1, EPOXY COATED)	11	11
6				
7		#8 x 1'-6" (LEVEL 1, EPOXY COATED)	2	2
8				

Vermont Agency of Transportation
RECEIVED
ON: June 10, 2015
and Checked for
CONFORMANCE
BY: D. PETERSON DATE: 06/11/2015

APPROVAL STAMP:
FOR DESIGN AND FABRICATION
STATE OF VERMONT ERIC GOLDENWOOD NO. 11 LICENSED PROFESSIONAL ENGINEER
DATE 6/10/15

J.P. CARRARA & SONS INC.
Precast & Prestress Manufacturer
2464 CASE STR., MIDDLEBURY, VERMONT 05753 Phone:(802)388-6361 Fax:(802)388-9010

RENAUD BROS, INC.
CONTRACTOR
VERNON, VERMONT

STATE OF VERMONT AGENCY OF TRANSPORTATION
COUNTY OF WINDSOR

TOWN OF ANDOVER
VT RTE 11, RURAL MINOR ARTERIAL
BRIDGE NO.: 41 PROJECT NO.: BHF 016-1(29)

PRECAST CURTAIN WALL DETAILS

DATE: MAY 6, 2015
SCALE: NOTED
CHKD: J.C. DFTM: B.L.
JOB NO: 23465-015
DWG. NO: CW1

F:\VT-Bridges\23465-15 Andover 41\23465-CW1.dwg, 6/9/2015 3:27:21 PM

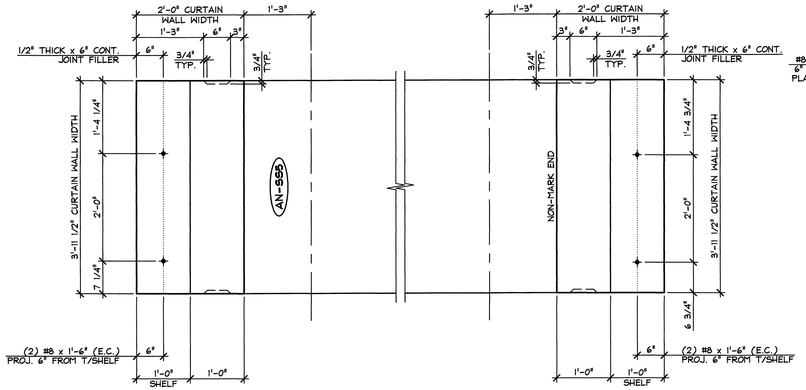

1 CW2 DIMENSIONAL PLAN VIEW IN FORM
3/4" = 1'-0"

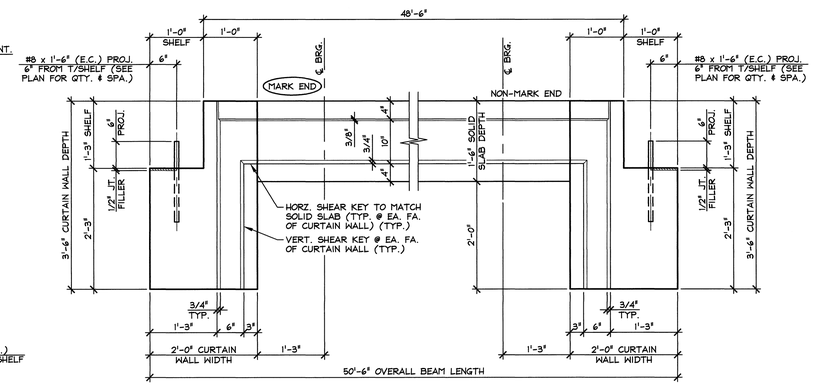

4 CW2 DIMENSIONAL ELEVATION
3/4" = 1'-0"

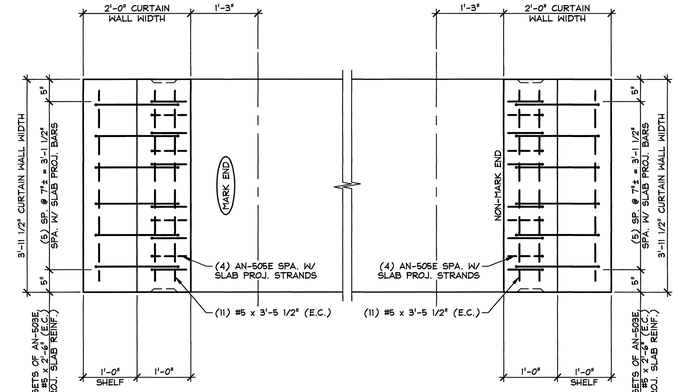

5 CW2 REINFORCING PLAN VIEW IN FORM
3/4" = 1'-0"

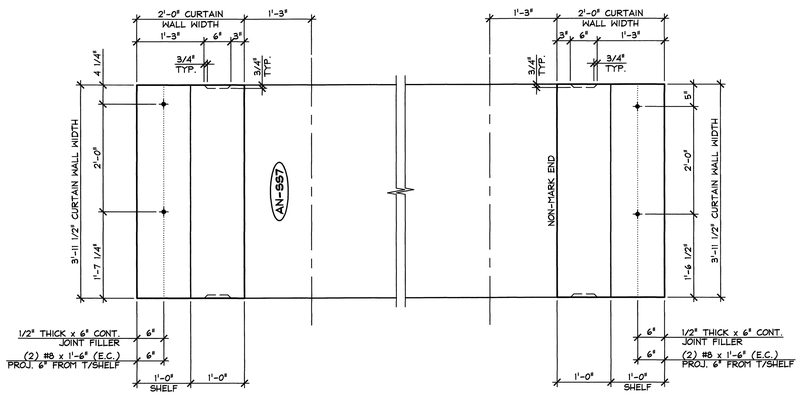

2 CW2 DIMENSIONAL PLAN VIEW IN FORM
3/4" = 1'-0"

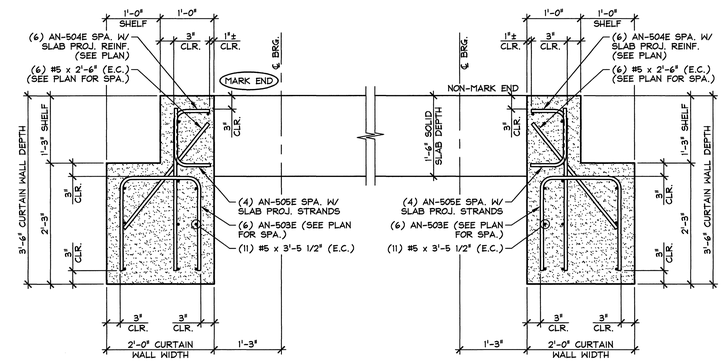

6 CW2 REINFORCING SECTION
3/4" = 1'-0"

THIS PLAN NOT USED

3 CW2 DIMENSIONAL PLAN VIEW IN FORM
3/4" = 1'-0"

MARK: AN-SS5	QTY.: 1
MARK: AN-SS7	QTY.: 1
MARK:	QTY.:

SHOP NOTE:
TOP OF CURTAIN WALL SHALL RECEIVE A FINISH MATCHING SOLID SLAB.

10.01 cy = SOLID SLAB
0.84 cy = CURTAIN WALL (MARK END)
0.84 cy = CURTAIN WALL (NON-MARK END)
11.69 cy = TOTAL SLAB VOL.

20.27 T = SOLID SLAB
1.71 T = CURTAIN WALL (MARK END)
1.71 T = CURTAIN WALL (NON-MARK END)
23.69 T = TOTAL SLAB WT.

MATERIAL LIST / CURTAIN WALL

ITEM	MARK	DESCRIPTION	QTY./CURTAIN WALL MARK END	QTY./CURTAIN WALL NON-MARK END
1	AN-503E	#5 BENT BAR (LEVEL I, EPOXY COATED)	6	6
2	AN-504E	#5 BENT BAR (LEVEL I, EPOXY COATED)	6	6
3	AN-505E	#5 BENT BAR (LEVEL I, EPOXY COATED)	4	4
4		#5 x 2'-6" (LEVEL I, EPOXY COATED)	6	6
5		#5 x 3'-5 1/2" (LEVEL I, EPOXY COATED)	11	11
6				
7		#8 x 1'-6" (LEVEL I, EPOXY COATED)	2	2
8				

Vermont Agency of Transportation
Andover BHF 016-1 (29) - Precast Beams Reviewed 06-10-15
RECEIVED
ON: June 10, 2015
and Checked for
CONFORMANCE
BY: D. PETERSON DATE: 06/11/2015

APPROVAL STAMP:
FOR DESIGN AND FABRICATION
STATE OF VERMONT · BRADLEY A. GOLDENWOOD · NO. 17111 · LICENSED · PROFESSIONAL ENGINEER
DATE 6/10/15

J.P. CARRARA & SONS INC.
Precast & Prestress Manufacturer
2464 CASE STR., MIDDLEBURY, VERMONT 05753 Phone:(802)388-6361 Fax:(802)388-9010

RENAUD BROS, INC.
CONTRACTOR
VERNON, VERMONT

STATE OF VERMONT AGENCY OF TRANSPORTATION
COUNTY OF WINDSOR

DATE: MAY 6, 2015
SCALE: NOTED

TOWN OF ANDOVER
VT RTE 11, RURAL MINOR ARTERIAL
BRIDGE NO.: 41 PROJECT NO.: BHF 016-1(29)

CHKD: J.C. DFTM: B.L.
JOB NO: 23465-015

PRECAST CURTAIN WALL DETAILS

DWG. NO: CW2

F:\VT-Bridges\23465-15 Andover 41\23465-CW2.dwg, 6/9/2015 3:28:55 PM

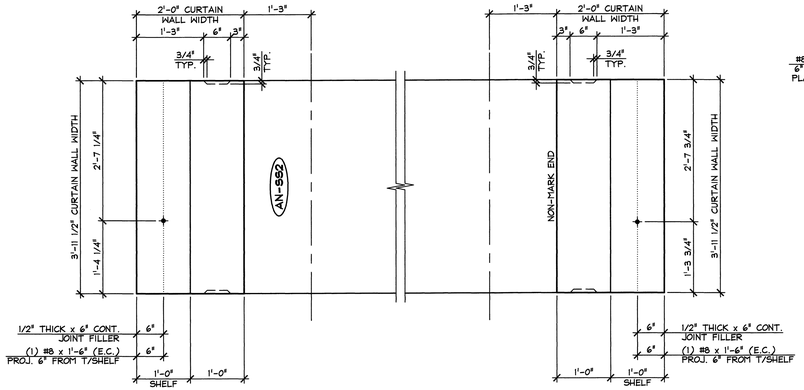

1 CW3 DIMENSIONAL PLAN VIEW IN FORM
3/4" = 1'-0"

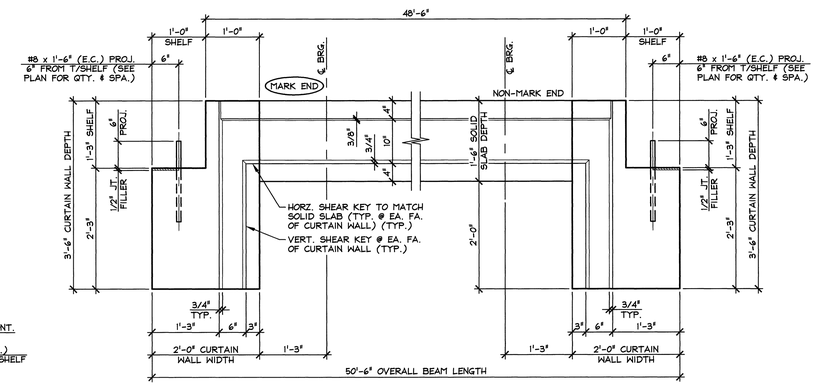

4 CW3 DIMENSIONAL ELEVATION
3/4" = 1'-0"

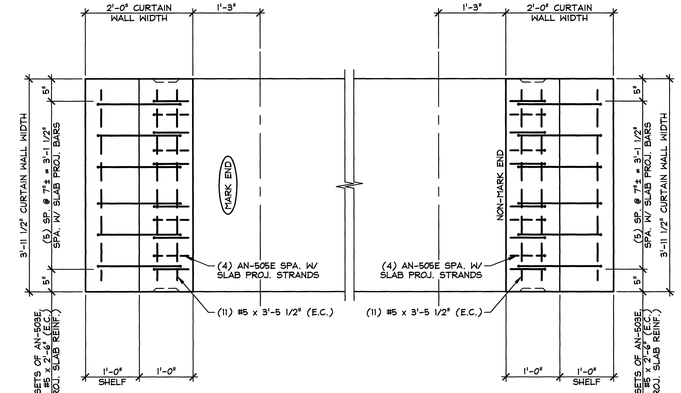

5 CW3 REINFORCING PLAN VIEW IN FORM
3/4" = 1'-0"

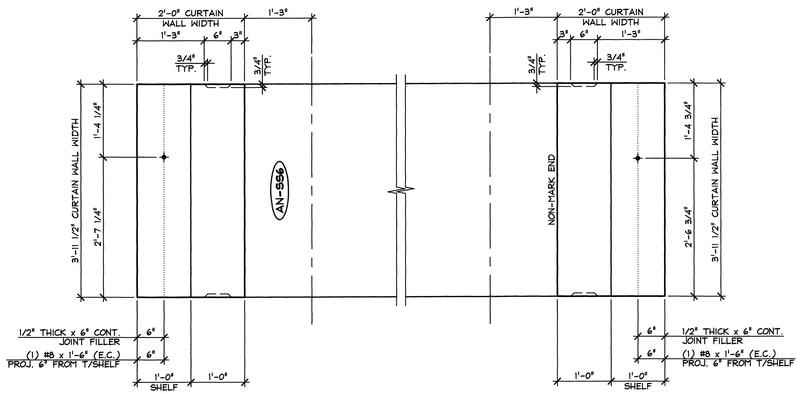

2 CW3 DIMENSIONAL PLAN VIEW IN FORM
3/4" = 1'-0"

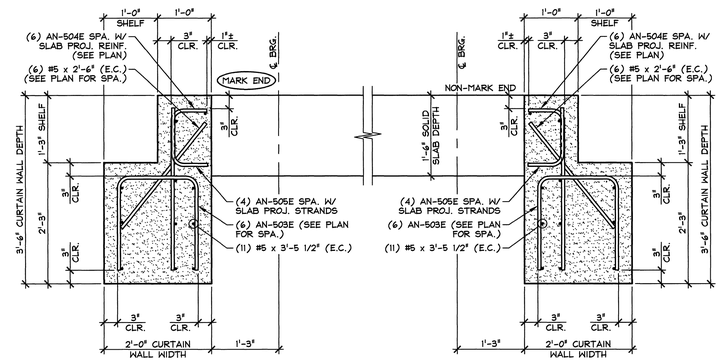

6 CW3 REINFORCING SECTION
3/4" = 1'-0"

THIS PLAN NOT USED

3 CW3 DIMENSIONAL PLAN VIEW IN FORM
3/4" = 1'-0"

MARK:	AN-SS2	QTY.:	1
MARK:	AN-SS6	QTY.:	1
MARK:		QTY.:	

SHOP NOTE:
TOP OF CURTAIN WALL SHALL RECEIVE A FINISH MATCHING SOLID SLAB.

10.01 cy = SOLID SLAB
0.84 cy = CURTAIN WALL (MARK END)
0.84 cy = CURTAIN WALL (NON-MARK END)
11.69 cy = TOTAL SLAB VOL.

20.27 T = SOLID SLAB
1.71 T = CURTAIN WALL (MARK END)
1.71 T = CURTAIN WALL (NON-MARK END)
23.69 T = TOTAL SLAB WT.

MATERIAL LIST / CURTAIN WALL

ITEM	MARK	DESCRIPTION	QTY./CURTAIN WALL	
			MARK END	NON-MARK END
1	AN-503E	#5 BENT BAR (LEVEL 1, EPOXY COATED)	6	6
2	AN-504E	#5 BENT BAR (LEVEL 1, EPOXY COATED)	6	6
3	AN-505E	#5 BENT BAR (LEVEL 1, EPOXY COATED)	4	4
4		#5 x 2'-6" (LEVEL 1, EPOXY COATED)	6	6
5		#5 x 3'-5 1/2" (LEVEL 1, EPOXY COATED)	11	11
6				
7		#8 x 1'-6" (LEVEL 1, EPOXY COATED)	1	1
8				

Vermont Agency of Transportation
RECEIVED
ON: June 10, 2015
and Checked for
CONFORMANCE
BY: D. PETERSON DATE: 06/11/2015

APPROVAL STAMP:
FOR DESIGN AND FABRICATION
STATE OF VERMONT ERIC J. GOLDENBERG NO. 11111 LICENSED PROFESSIONAL ENGINEER
DATE 6/10/15

J.P. CARRARA & SONS INC.
Precast & Prestress Manufacturer
2464 CASE STR., MIDDLEBURY, VERMONT 05753 Phone:(802)388-6361 Fax:(802)388-9010

RENAUD BROS, INC.
CONTRACTOR
VERNON, VERMONT

STATE OF VERMONT AGENCY OF TRANSPORTATION
COUNTY OF WINDSOR

TOWN OF ANDOVER
VT RTE 11, RURAL MINOR ARTERIAL
BRIDGE NO.: 41 PROJECT NO.: BHF 016-1(29)

PRECAST CURTAIN WALL DETAILS

DATE: MAY 6, 2015
SCALE: NOTED
CHKD: J.C. DFTM: B.L.
JOB NO: 23465-015
DWG. NO: CW3

F:\VT-Bridges\23465-15 Andover 41\23465-CW3.dwg, 6/9/2015 3:34:06 PM

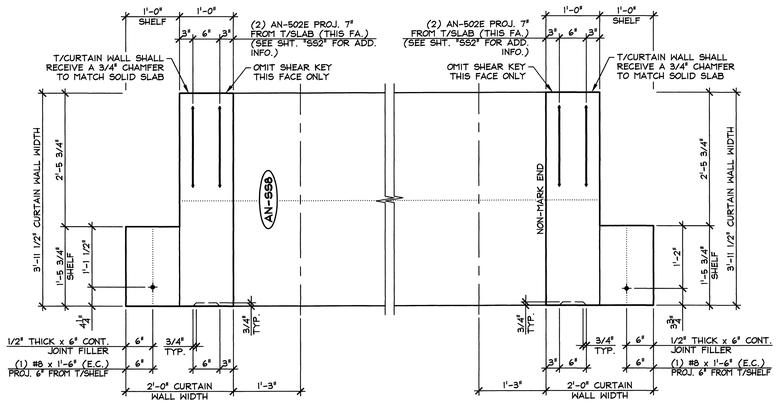

1 CW4 DIMENSIONAL PLAN VIEW IN FORM
3/4" = 1'-0"

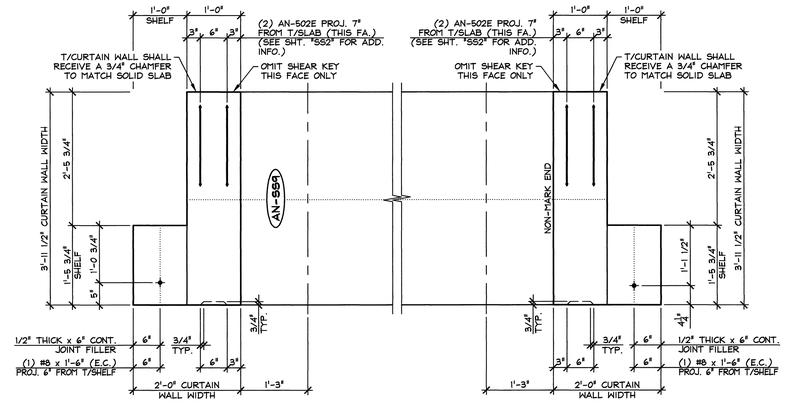

2 CW4 DIMENSIONAL PLAN VIEW IN FORM
3/4" = 1'-0"

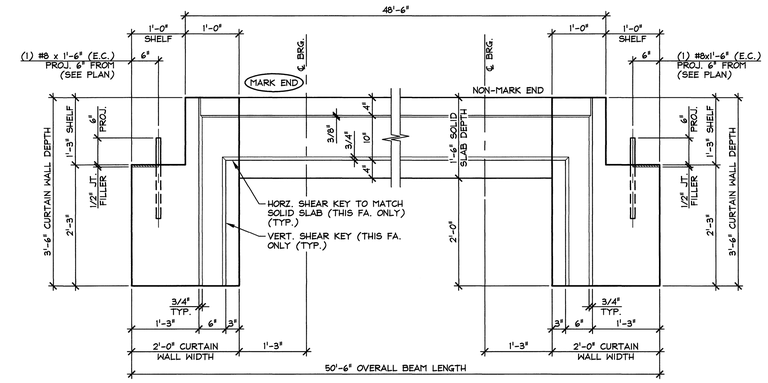

3 CW4 DIMENSIONAL ELEVATION
3/4" = 1'-0"

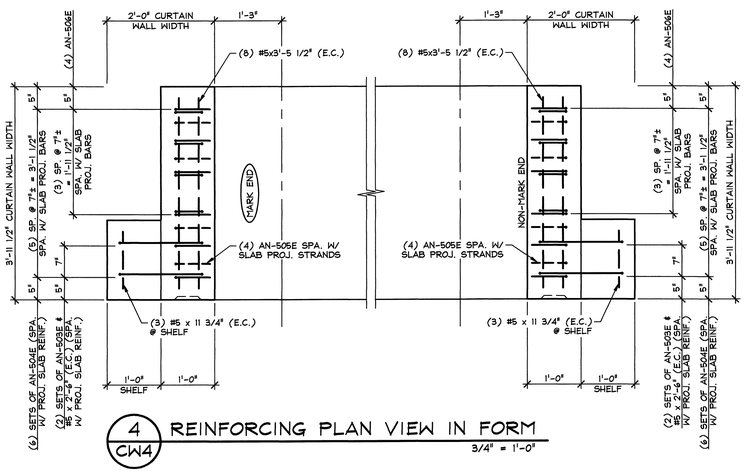

4 CW4 REINFORCING PLAN VIEW IN FORM
3/4" = 1'-0"

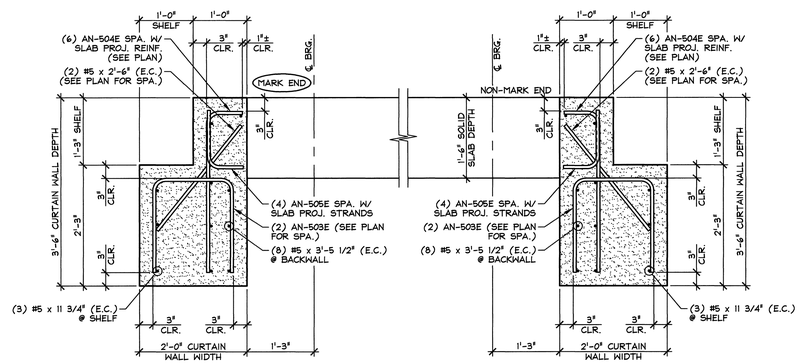

5 CW4 REINFORCING SECTION
3/4" = 1'-0"

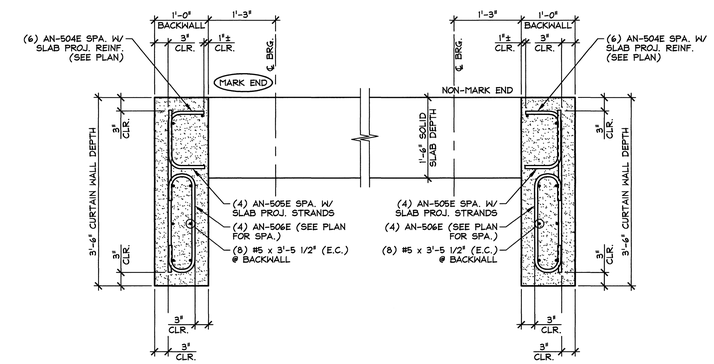

6 CW4 REINFORCING SECTION
3/4" = 1'-0"

MARK:	AN-SS8	QTY.:	1
MARK:	AN-SS9	QTY.:	1

SHOP NOTE:
TOP OF CURTAIN WALL SHALL RECEIVE A FINISH MATCHING SOLID SLAB.

10.11 cy = SOLID SLAB
0.64 cy = CURTAIN WALL (MARK END)
0.64 cy = CURTAIN WALL (NON-MARK END)
11.39 cy = TOTAL SLAB VOL.

20.48 T = SOLID SLAB
1.29 T = CURTAIN WALL (MARK END)
1.29 T = CURTAIN WALL (NON-MARK END)
23.06 T = TOTAL SLAB WT.

MATERIAL LIST / CURTAIN WALL

ITEM	MARK	DESCRIPTION	QTY./CURTAIN WALL	
			MARK END	NON-MARK END
1	AN-502E	#5 BENT BAR (LEVEL 1, EPOXY COATED)	2	2
2	AN-503E	#5 BENT BAR (LEVEL 1, EPOXY COATED)	2	2
3	AN-504E	#5 BENT BAR (LEVEL 1, EPOXY COATED)	6	6
4	AN-505E	#5 BENT BAR (LEVEL 1, EPOXY COATED)	4	4
5	AN-506E	#5 BENT BAR (LEVEL 1, EPOXY COATED)	6	6
6		#5 x 2'-6" (LEVEL 1, EPOXY COATED)	2	2
7		#5 x 3'-5 1/2" (LEVEL 1, EPOXY COATED)	8	8
8		#5 x 11 3/4" (LEVEL 1, EPOXY COATED)	3	3
9				
10		#8 x 1'-6" (LEVEL 1, EPOXY COATED)	1	1

Vermont Agency of Transportation
RECEIVED
ON: June 10, 2015
and Checked for
CONFORMANCE
BY: D. PETERSON DATE: 06/11/2015

APPROVAL STAMP:
FOR DESIGN AND FABRICATION
STATE OF VERMONT — BRIAN G. GOLDENWOOD — No. 9111 — LICENSED PROFESSIONAL ENGINEER
DATE 6/10/15

J.P. CARRARA & SONS INC.
Precast & Prestress Manufacturer
2464 CASE STR., MIDDLEBURY, VERMONT 05753 Phone:(802)388-6361 Fax:(802)388-9010

RENAUD BROS, INC.
CONTRACTOR
VERNON, VERMONT

STATE OF VERMONT AGENCY OF TRANSPORTATION
COUNTY OF WINDSOR

DATE: MAY 6, 2015
SCALE: NOTED

TOWN OF ANDOVER
VT RTE 11, RURAL MINOR ARTERIAL
BRIDGE NO.: 41 PROJECT NO.: BHF 016-1(29)

CHKD: J.C. DFTM: B.L.
JOB NO: 23465-015

PRECAST CURTAIN WALL DETAILS

DWG. NO: CW4

F:\VT-Bridges\23465-15 Andover 4\123465-CW4.dwg, 6/9/2015 3:56:41 PM

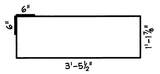

AN-401E
#4 BENT BAR
LEVEL 1 (EPOXY COATED)
USE 2"ϕ (50 mm) PIN
(603) REQ'D.

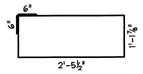

AN-402E
#4 BENT BAR
LEVEL 1 (EPOXY COATED)
USE 2"ϕ (50 mm) PIN
(180) REQ'D.

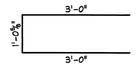

AN-403E
#4 BENT BAR
LEVEL 1 (EPOXY COATED)
USE 2"ϕ (50 mm) PIN
(72) REQ'D.

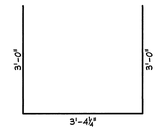

AN-404E
#4 BENT BAR
LEVEL 1 (EPOXY COATED)
USE 2"ϕ (50 mm) PIN
(36) REQ'D.

THIS DETAIL NOT USED

AN-501E

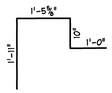

AN-502E
#5 BENT BAR
LEVEL 1 (EPOXY COATED)
USE 2¾"ϕ (70 mm) PIN
(146) REQ'D. △1

AN-503E
#5 BENT BAR
LEVEL 1 (EPOXY COATED)
USE 2¾"ϕ (70 mm) PIN
(92) REQ'D.

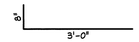

AN-504E
#5 BENT BAR
LEVEL 1 (EPOXY COATED)
USE 2¾"ϕ (70 mm) PIN
(108) REQ'D.

AN-505E
#5 BENT BAR
LEVEL 1 (EPOXY COATED)
USE 2¾"ϕ (70 mm) PIN
(72) REQ'D.

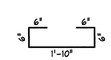

AN-506E
#5 BENT BAR
LEVEL 1 (EPOXY COATED)
USE 2¾"ϕ (70 mm) PIN
(24) REQ'D.

MISCELLANEOUS MATERIALS

ITEM	MARK	QTY.	DESCRIPTION	REMARKS
1	EM-AN1	8	1" THICK x 6" x 6" W/ (1) 3/4"ϕ HOLE (GALV.)	FOR ERECTION; SEE DETAIL THIS SHEET
2		16	0.60"ϕ SINGLE USE STRESSING CHUCK	FOR ERECTION
3		8	0.60"ϕ x 270 KSI x 38'-9" LONG POLYSTRAND	FOR ERECTION
4		△2 32	COMPRESSIBLE SEALER SELF ADHESIVE	FOR ERECTION
5				
6				
7				
8		54	#5 x 50'-0" (LEVEL 1, EPOXY COATED)	
9				
10	MK-AN2	22	DAYTON C-24 TYPE 4-APR DECK FORM HANGER	GALVANIZE
11		36	SET OF (4) 1/2"ϕ STRAND LIFTING LOOPS △1	
12				
13				
14				
15		92	#5 x 2'-6" (LEVEL 1, EPOXY COATED)	CAST INTO CURTAIN WALL
16		186	#5 x 3'-5 1/2" (LEVEL 1, EPOXY COATED)	CAST INTO CURTAIN WALL
17		12	#5 x 11 3/4" (LEVEL 1, EPOXY COATED)	CAST INTO CURTAIN WALL
18				
19		28	#8 x 1'-6" (LEVEL 1, EPOXY COATED)	CAST INTO CURTAIN WALL
20				

△2

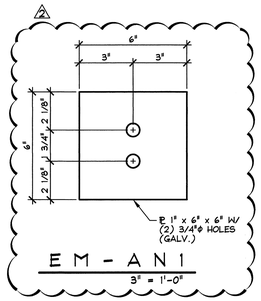

EM - A N 1
3" = 1'-0"

△2 6-9-15 REVISE POST-TENSIONING
△1 6-1-15 REVISED AS NOTED

Vermont Agency of Transportation
RECEIVED
ON: June 10, 2015
and Checked for
CONFORMANCE
BY: D. PETERSON DATE: 06/11/2015

APPROVAL STAMP:
FOR DESIGN AND FABRICATION
STATE OF VERMONT
ERIC J. GOLDENWOOD
NO. 11
LICENSED
PROFESSIONAL ENGINEER
DATE 6/10/15

J.P. CARRARA & SONS INC.
Precast & Prestress Manufacturer
2464 CASE STR., MIDDLEBURY, VERMONT 05753 Phone:(802)388-6361 Fax:(802)388-9010

RENAUD BROS, INC.
CONTRACTOR
VERNON, VERMONT

STATE OF VERMONT AGENCY OF TRANSPORTATION
COUNTY OF WINDSOR

TOWN OF ANDOVER
VT RTE 11, RURAL MINOR ARTERIAL
BRIDGE NO.: 41 PROJECT NO.: BHF 016-1(29)

MATERIALS LIST

DATE: MAY 6, 2015
SCALE: NOTED
CHKD: J.C. DFTM: B.L.
JOB NO: 23465-015
DWG. NO: M1

F:\VT-Bridges\23465-15 Andover 41\23465-M1.dwg, 6/9/2015 3:57:33 PM