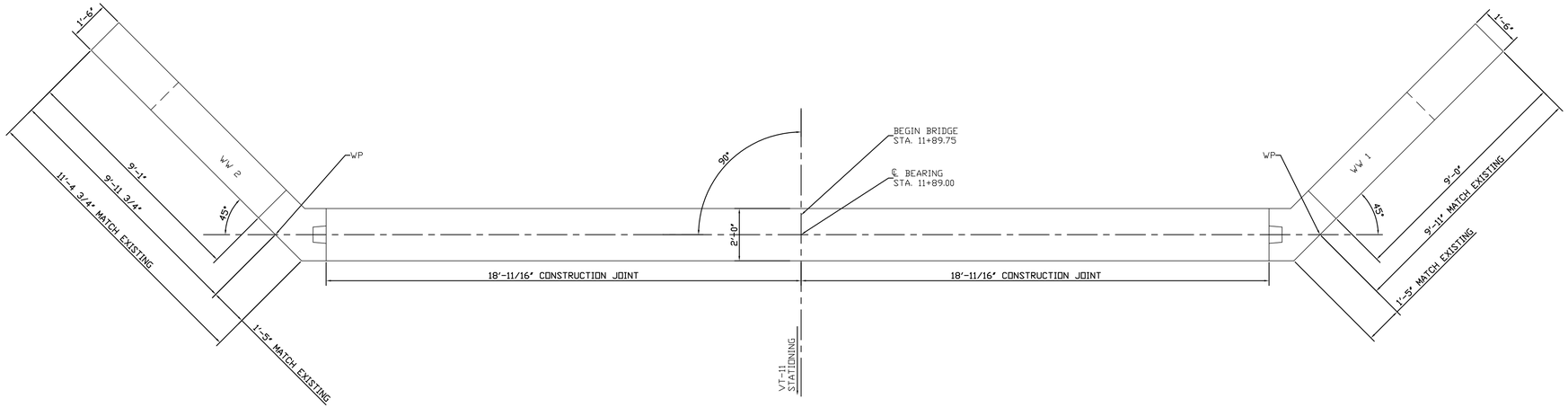

ABUTMENT NO. 1 PLAN

SCALE 3/8" = 1'-0"

Vermont Agency of Transportation

ANDOVER BHF 016-1 (29) - Reinforcing Submittal.pdf

RECEIVED

ON: June 24, 2015

and Checked for

CONFORMANCE

BY: D. PETERSON DATE: 06/25/2015

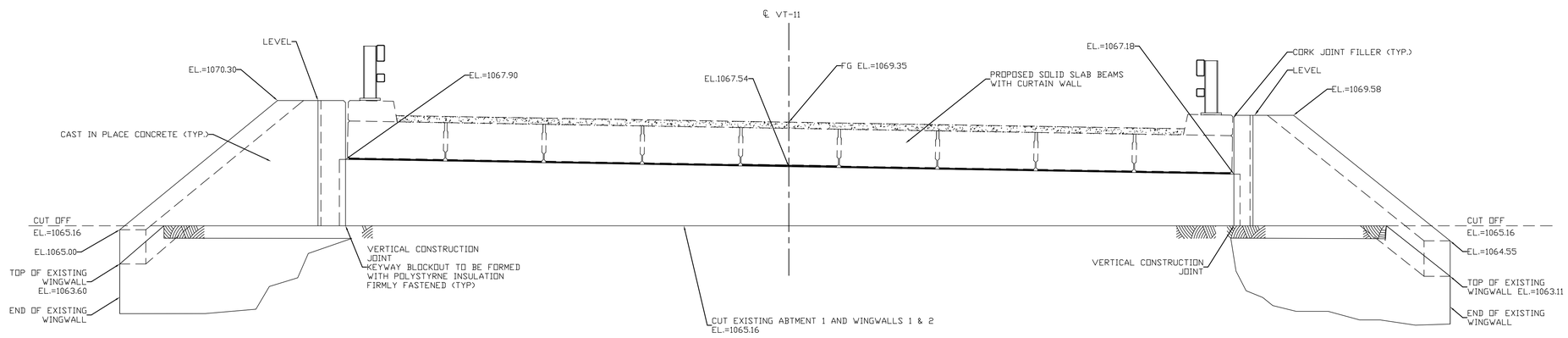

ABUTMENT NO. 1 ELEVATION

SCALE 3/8" = 1'-0"

NOTE:

NF = NEAR FACE
FF = FAR FACE
EF = EACH FACE
▲ = CUT TO FIT IN FIELD
3" CLEAR, UNLESS OTHERWISE SPECIFIED ON THE PLANS.
2'-2" BAR LAP UNLESS OTHERWISE SPECIFIED ON THE PLANS.
SECTION OF EXISTING ABUTMENT AND WINGWALLS TO BE CUT.

REV. NO.	DATE:
1	06/24/15

BRENAUD BROS. INC.
283 FT. BRIDGEMAN RD. VERNON VT., 05354
PH. (802) 257-7383 FAX (802) 257-7308

SHEET NAME: ABUTMENT 1 PLAN AND ELEVATION

PROJECT NAME: ANDOVER

PROJECT NO: BHF 016-1 (29)

DRAWN BY: CE | CHK'D BY: | DATE: 06/03/2015

SHEET NO. 1 OF 7

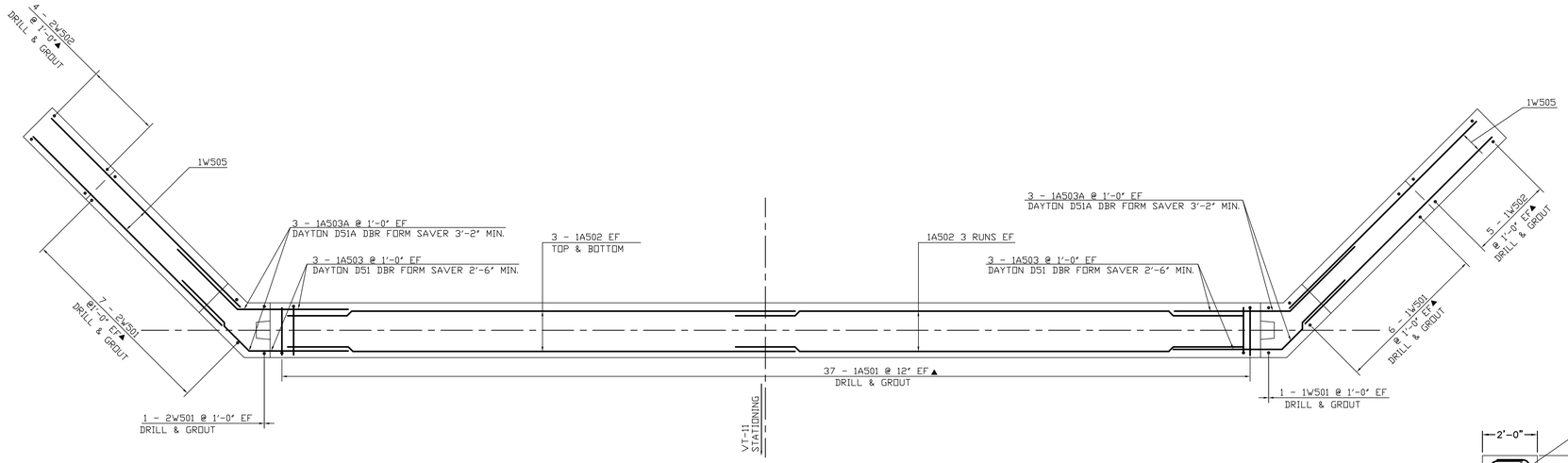

ABUTMENT NO. 1 BELOW BRIDGE SEAT REINFORCING LAYOUT

SCALE 3/8" = 1'-0"

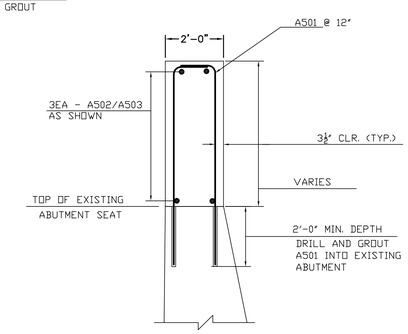

ABUTMENT TYPICAL

SCALE 3/8" = 1'-0"

Vermont Agency of Transportation

ANDOVER BHF 016-1 (29) - Reinforcing Submittal.pdf

RECEIVED

ON: June 24, 2015

and Checked for

CONFORMANCE

BY: D. PETERSON DATE: 06/25/2015

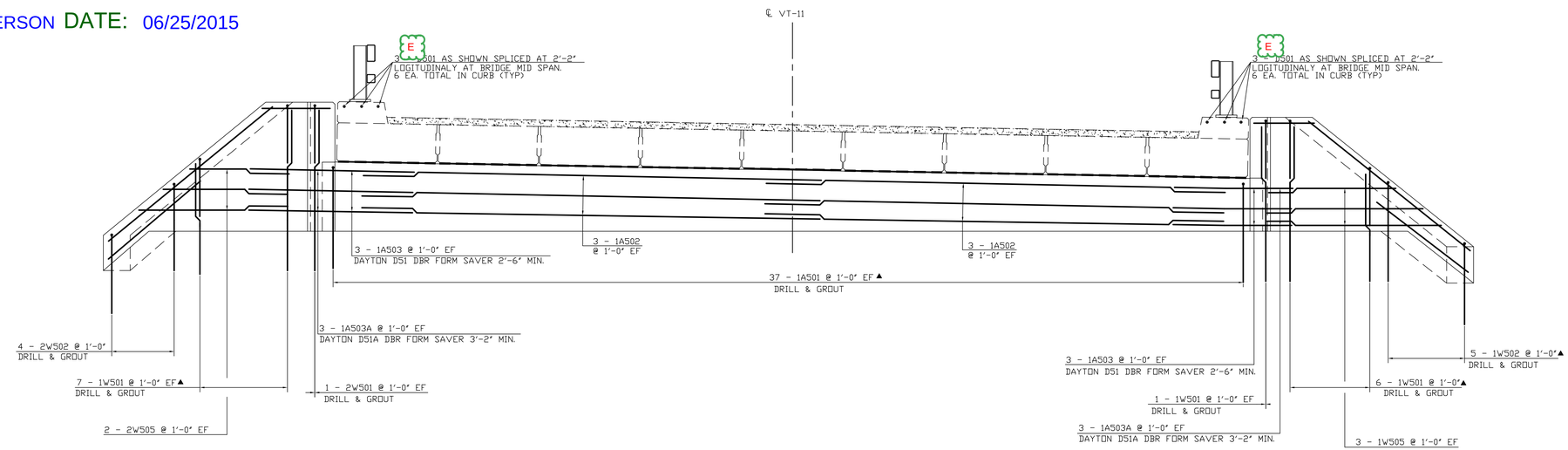

ABUTMENT NO. 1 REINFORCING ELEVATION

SCALE 3/8" = 1'-0"

NOTE:

NF = NEAR FACE
FF = FAR FACE
EF = EACH FACE
▲ = CUT TO FIT IN FIELD
3" CLEAR, UNLESS OTHERWISE SPECIFIED ON THE PLANS.
2'-2" BAR LAP UNLESS OTHERWISE SPECIFIED ON THE PLANS.

DRILL AND GROUT ABUTMENT AS SHOWN IN THE "ABUTMENT TYPICAL" ON THIS SHEET

DRILL AND GROUT WINGWALLS AS SHOWN IN THE "WINGWALL TYPICAL" ON "WINGWALL 1 & 2 REINFORCING" SHEET

REV. NO.	DATE:
1	06/24/15

BRENAUD BROS. INC.
283 FT. BRIDGEMAN RD. VERNON VT., 05354
PH. (802) 257-7383 FAX (802) 257-7308

SHEET NAME: ABUTMENT 1 REINFORCING			
PROJECT NAME: ANDOVER			SHEET NO. 2 OF 7
PROJECT NO: BHF 016-1 (29)			
DRAWN BY: CE	CHK'D BY:	DATE: 06/03/2015	

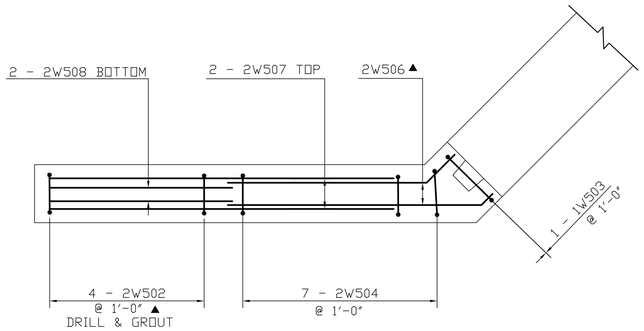

WINGWALL NO. 2 PLAN

SCALE 1/2" = 1'-0"

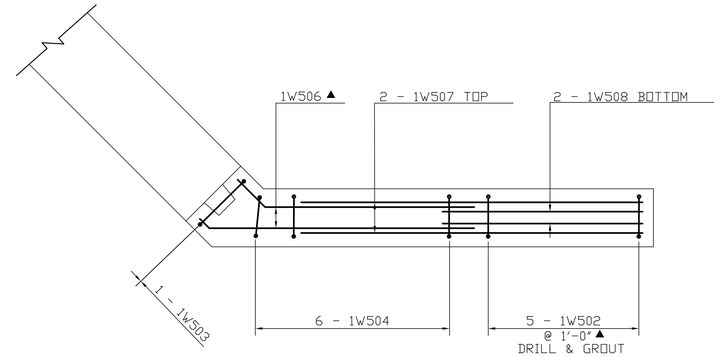

WINGWALL NO. 1 PLAN

SCALE 1/2" = 1'-0"

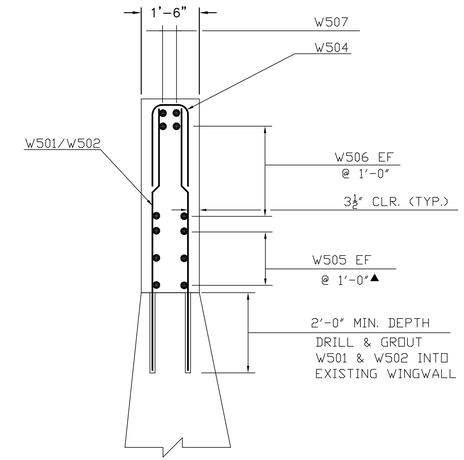

WINGWALL TYPICAL

SCALE 1/2" = 1'-0"

Vermont Agency of Transportation

ANDOVER BHF 016-1 (29) - Reinforcing Submitted2.pdf

RECEIVED

ON: June 24, 2015

and Checked for

CONFORMANCE

BY: D. PETERSON DATE: 06/25/2015

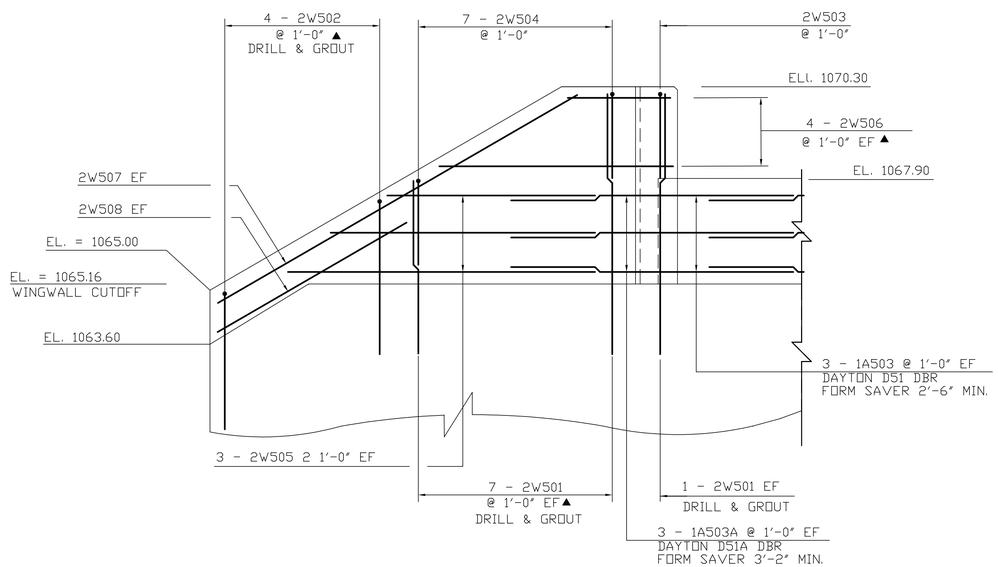

WINGWALL NO. 2 ELEVATION

SCALE 1/2" = 1'-0"

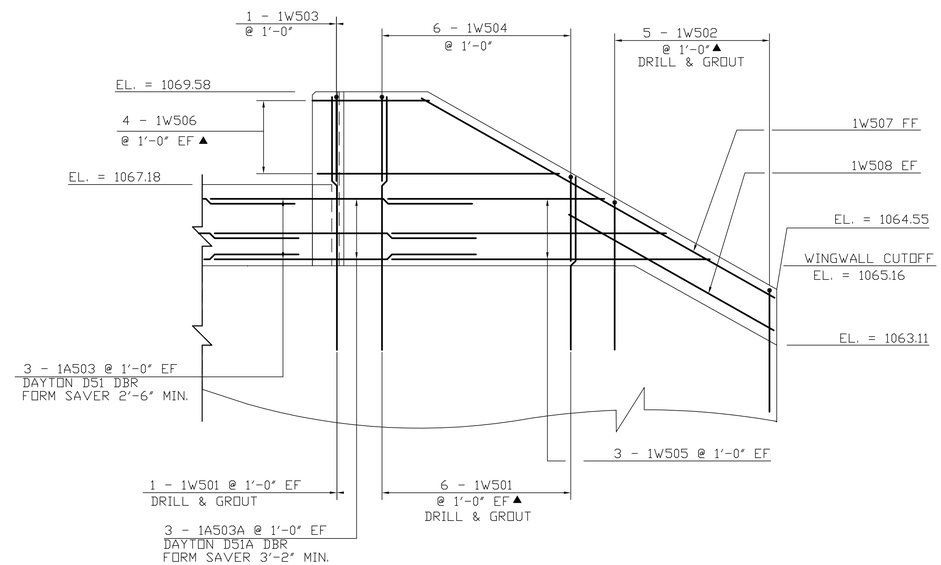

WINGWALL NO. 1 ELEVATION

SCALE 1/2" = 1'-0"

NOTE:

NF = NEAR FACE
FF = FAR FACE
EF = EACH FACE
▲ = CUT TO FIT IN FIELD
3" CLEAR, UNLESS OTHERWISE SPECIFIED ON THE PLANS.
2'-2" BAR LAP UNLESS OTHERWISE SPECIFIED ON THE PLANS.

DRILL AND GROUT WINGWALLS AS SHOWN IN THE "WINGWALL TYPICAL" ON THIS SHEET

REV. NO.	DATE:
1	06/24/15

RENAUD BROS. INC.
283 FT. BRIDGEMAN RD. VERNON VT., 05354
PH. (802) 257-7585 FAX (802) 257-7508

SHEET NAME: WINGWALL 1 & 2 REINFORCING

PROJECT NAME: ANDOVER

PROJECT NO: BHF 016-1 (29)

DRAWN BY: CE | CHK'D BY: | DATE: 06/03/2015

SHEET NO. 3 OF 7

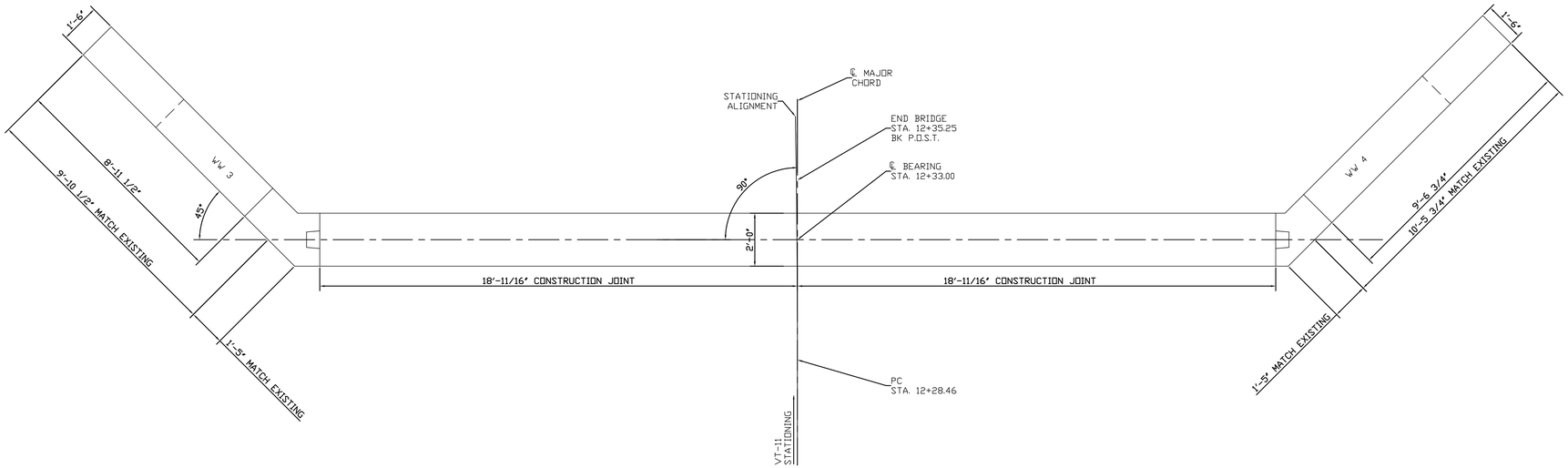

ABUTMENT NO. 2 PLAN

SCALE 3/8" = 1'-0"

Vermont Agency of Transportation

RECEIVED

ON: June 24, 2015

and Checked for

CONFORMANCE

BY: D. PETERSON DATE: 06/25/2015

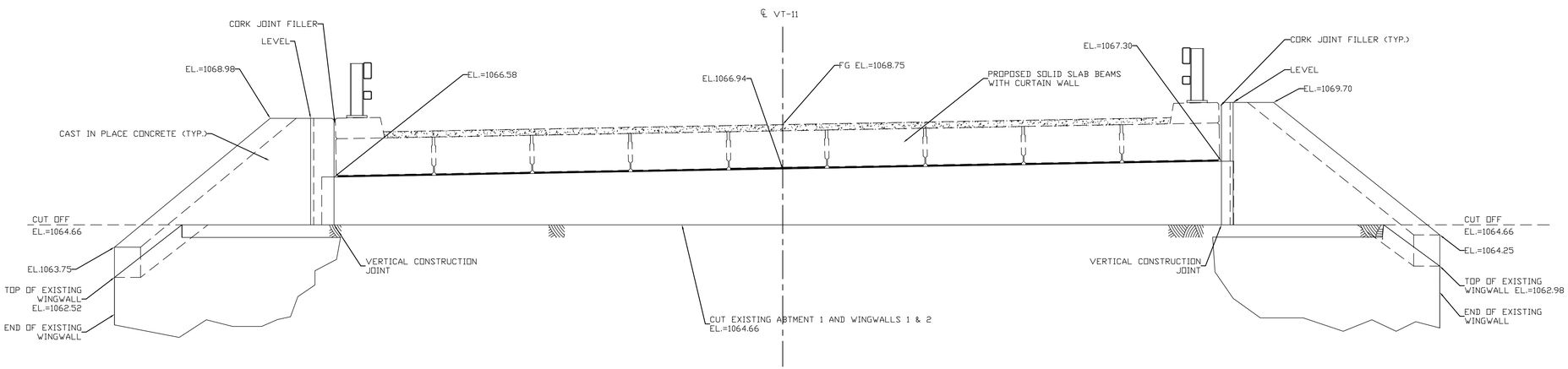

ABUTMENT NO. 2 ELEVATION

SCALE 3/8" = 1'-0"

NOTE:

NF = NEAR FACE
FF = FAR FACE
EF = EACH FACE
▲ = CUT TO FIT IN FIELD
3" CLEAR, UNLESS OTHERWISE SPECIFIED ON THE PLANS.
2'-2" BAR LAP UNLESS OTHERWISE SPECIFIED ON THE PLANS.
SECTION OF EXISTING ABUTMENT AND WINGWALLS TO BE CUT.

REV. NO.	DATE:
1	06/24/15

BRENAUD BROS. INC.
283 FT. BRIDGEMAN RD. VERNON VT., 05354
PH. (802) 257-7383 FAX (802) 257-7308

SHEET NAME: ABUTMENT 2 PLAN AND ELEVATION

PROJECT NAME: ANDOVER

PROJECT NO: BHF 016-1 (29)

DRAWN BY: CE

CHK'D BY:

DATE: 06/03/2015

SHEET NO. 4 OF 7

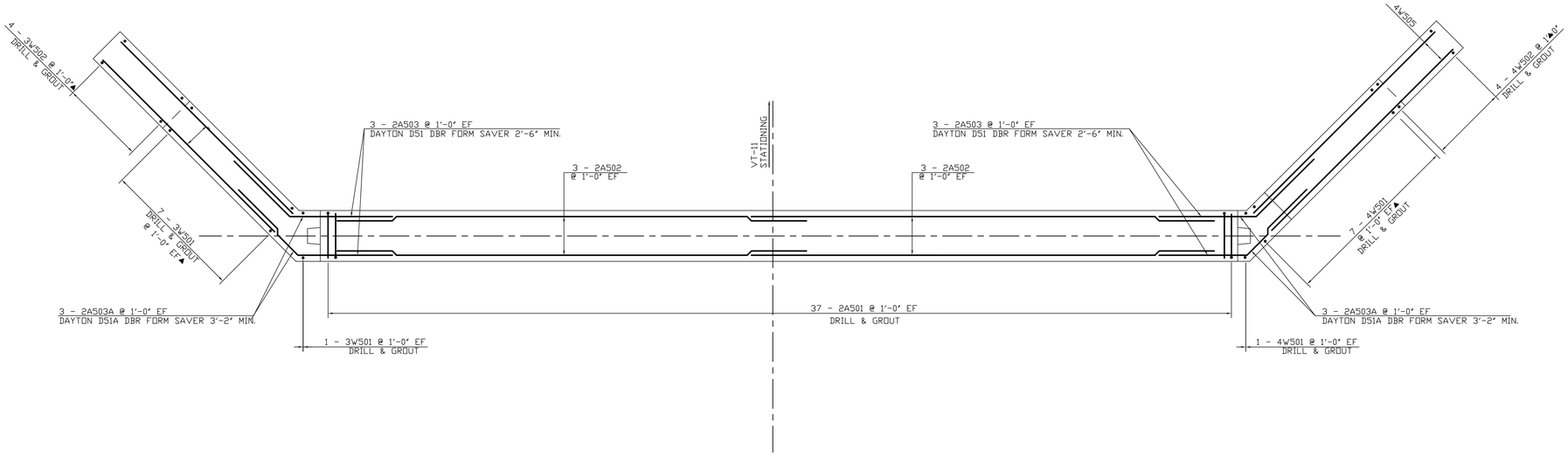

ABUTMENT NO. 2 BELOW BRIDGE SEAT REINFORCING LAYOUT

SCALE 3/8" = 1'-0"

Vermont Agency of Transportation

ANDOVER BHF 016-1 (29) - Reinforcing Submittal#2.pdf

RECEIVED

ON: June 24, 2015

and Checked for

CONFORMANCE

BY: D. PETERSON DATE: 06/25/2015

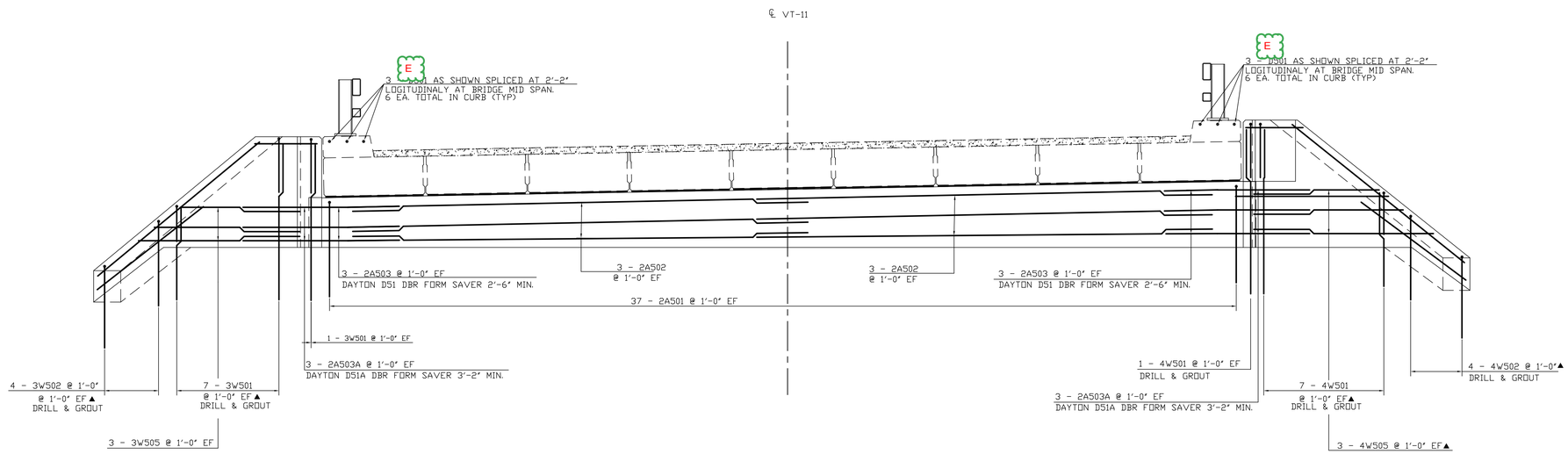

ABUTMENT NO. 2 REINFORCING ELEVATION

SCALE 3/8" = 1'-0"

NOTE:

NF = NEAR FACE
FF = FAR FACE
EF = EACH FACE
▲ = CUT TO FIT IN FIELD
3" CLEAR, UNLESS OTHERWISE SPECIFIED ON THE PLANS.
2'-2" BAR LAP UNLESS OTHERWISE SPECIFIED ON THE PLANS.

DRILL AND GROUT ABUTMENT AS SHOWN IN THE "ABUTMENT TYPICAL" ON "ABUTMENT 1 REINFORCING" SHEET

DRILL AND GROUT WINGWALLS AS SHOWN IN THE "WINGWALL TYPICAL" ON "WINGWALL 1 & 2 REINFORCING" SHEET

REV. NO.	DATE:
1	06/24/15

BRENAUD BROS. INC.
285 FT. BRIDGEMAN RD. VERNON VT., 05354
PH. (802) 257-7585 FAX: (802) 257-7508

SHEET NAME: ABUTMENT 2 REINFORCING

PROJECT NAME: ANDOVER

PROJECT NO: BHF 016-1 (29)

SHEET NO. 5 OF 7

DRAWN BY: CE | CHK'D BY: | DATE: 06/03/2015

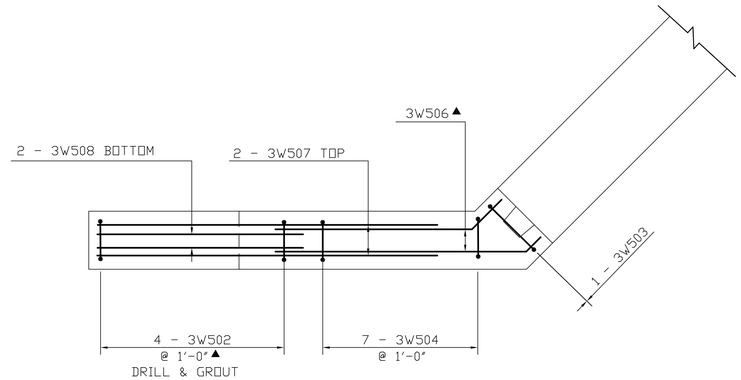

WINGWALL NO. 3 PLAN

SCALE 1/2" = 1'-0"

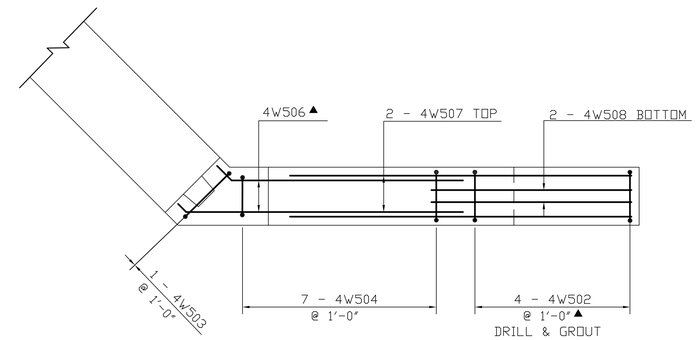

WINGWALL NO. 4 PLAN

SCALE 1/2" = 1'-0"

Vermont Agency of Transportation

RECEIVED

ON: June 24, 2015

and Checked for

CONFORMANCE

BY: D. PETERSON DATE: 06/25/2015

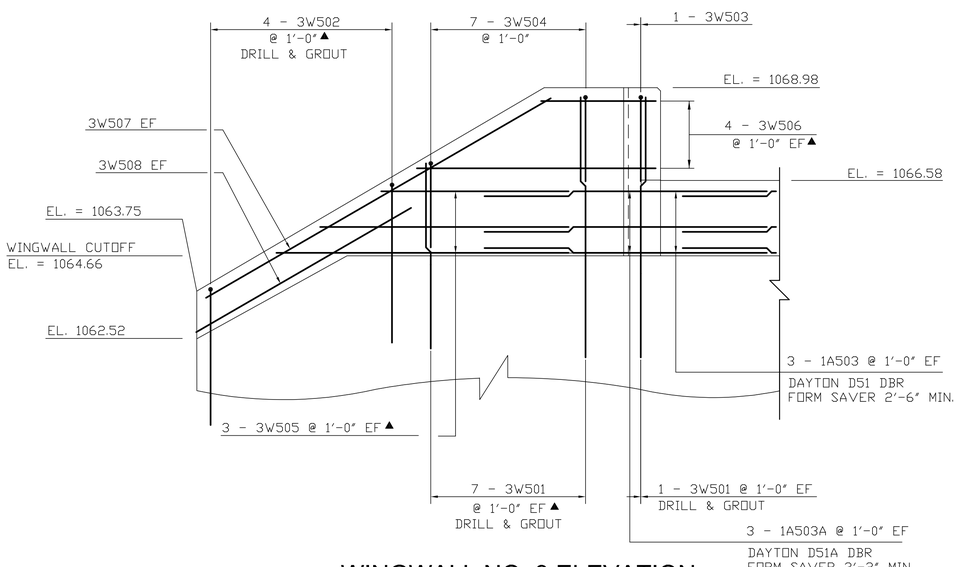

WINGWALL NO. 3 ELEVATION

SCALE 1/2" = 1'-0"

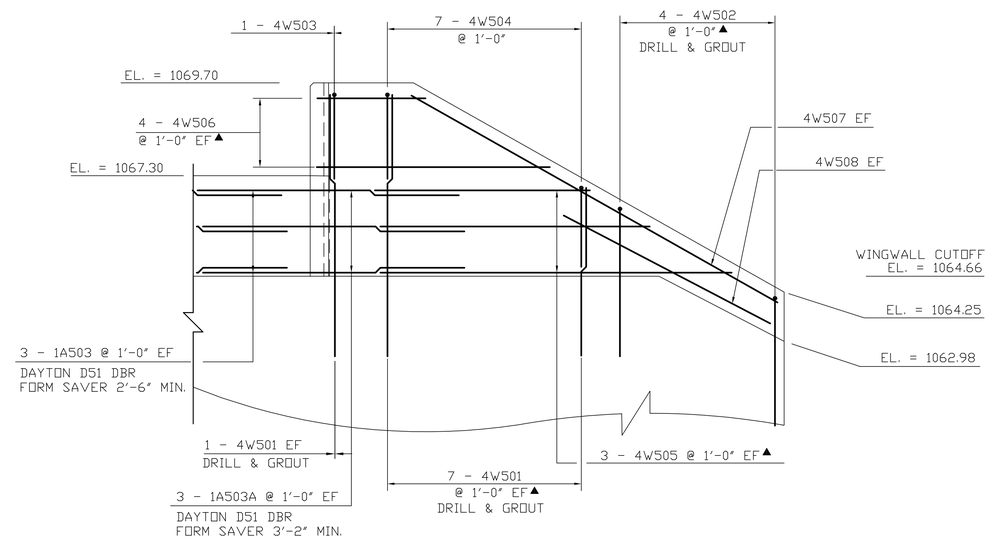

WINGWALL NO. 4 ELEVATION

SCALE 1/2" = 1'-0"

NOTE:

NF = NEAR FACE
FF = FAR FACE
EF = EACH FACE
▲ = CUT TO FIT IN FIELD
3" CLEAR, UNLESS OTHERWISE SPECIFIED ON THE PLANS.
2'-2" BAR LAP UNLESS OTHERWISE SPECIFIED ON THE PLANS.

DRILL AND GROUT WINGWALLS AS SHOWN IN THE "WINGWALL TYPICAL" ON "WINGWALL 1 & 2 REINFORCING" SHEET

REV. NO.	DATE:
1	06/24/15

BRENAUD BROS. INC.
283 FT. BRIDGEMAN RD. VERNON VT., 05354
PH. (802) 257-7585 FAX: (802) 257-7508

SHEET NAME: WINGWALL 3 & 4 REINFORCING

PROJECT NAME: ANDOVER

PROJECT NO: BHF 016-1 (29)

DRAWN BY: CE | CHK'D BY: | DATE: 06/03/2015

SHEET NO. 6 OF 7

TO DENOTE EPOXY COATED

ITEM	EACH	SIZE	LENGTH	MARK	TYPE	A	B	C	D	E	F	G	H	J	K	R	O
	CURBING			ED501													
✳	13	5	25'- 1"	D501	STR	25'- 1"											
	ABUTMENT #1																
	12	5	18'- 6"	1A502	STR	18'- 6"											
▲	74	5	5'- 11"	1A501	S-10		1'- 5"	4'- 6"									
	15	5	2'- 6"	1A503	STR	2'- 6"											
	15	5	3'- 2"	1A503A	22		1'- 0"	2'- 2"					8 1/2"		8 1/2"		
	ABUTMENT #2																
	12	5	18'- 6"	2A502	STR	18'- 6"											
▲	74	5	5'- 9"	2A501	S-10		1'- 5"	4'- 4"									
	12	5	2'- 6"	2A503	STR	2'- 6"											
	12	5	3'- 2"	2A503A	22		1'- 0"	2'- 2"					8 1/2"		8 1/2"		
	WINGWALL #1																
	14	5	6'- 3"	1W501	STR	6'- 3"											
▲	6	5	9'- 8"	1W505	STR	9'- 8"											
	2	5	10'- 1"	1W507	STR	10'- 1"											
✳	3	5	5'- 1"	1W508	STR	5'- 1"											
▲	5	5	7'- 11"	1W502	S-10		3'- 6"	0'- 11"	3'- 6"								
	1	5	5'- 9"	1W503	S-10		2'- 2"	1'- 5"	2'- 2"								
	6	5	5'- 3"	1W504	S-10		2'- 2"	0'- 11"	2'- 2"								
▲	8	5	7'- 6"	1W506	22		1'- 0"	6'- 6"					0'- 9"		0'- 9"		
	WINGWALL #2																
▲	16	5	6'- 5"	2W501	STR	6'- 3"											
▲	6	5	9'- 9"	2W505	STR	9'- 9"											
	2	5	10'- 3"	2W507	STR	10'- 3"											
	2	5	5'- 1"	2W508	STR	5'- 1"											
▲	4	5	8'- 3"	2W502	S-10		3'- 8"	0'- 3"	3'- 8"								
	1	5	5'- 9"	2W503	S-10		2'- 2"	1'- 5"	2'- 2"								
	7	5	5'- 3"	2W504	S-10		2'- 2"	0'- 11"	2'- 2"								
▲	8	5	8'- 1"	2W506	22		1'- 4"	6'- 9"					0'- 11"		0'- 11"		
	WINGWALL #3																
▲	16	5	6'- 1"	3W501	STR	6'- 1"											
▲	6	5	9'- 8"	3W505	STR	9'- 8"											
	2	5	10'- 5"	3W507	STR	10'- 5"											
	2	5	5'- 3"	3W508	STR	5'- 3"											
▲	4	5	8'- 11"	3W502	S-10		4'- 0"	0'- 11"	4'- 0"								
	1	5	5'- 9"	3W503	S-10		2'- 2"	1'- 5"	2'- 2"								
	7	5	5'- 3"	3W504	S-10		2'- 2"	0'- 11"	2'- 2"								
▲	8	5	6'- 8"	3W506	22		1'- 4"	6'- 9"					0'- 11"		0'- 11"		
▲	**WINGWALL #4**																
▲	14	5	6'- 6"	4W501	STR	6'- 6"											
	4	5	10'- 4"	4W502	STR	10'- 4"											
	2	5	10'- 11"	4W507	STR	10'- 11"											
	2	5	5'- 6"	4W508	STR	5'- 6"											
▲	4	5	7'- 9"	4W502	S-10		3'- 5"	0'- 11"	3'- 5"								
	1	5	5'- 9"	4W503	S-10		2'- 2"	1'- 5"	2'- 2"								
	7	5	5'- 3"	4W504	S-10		2'- 2"	0'- 11"	2'- 2"								
▲	8	5	7'- 10"	4W506	22		0'- 9"	7'- 1"					0'- 6"		0'- 6"		

~ NOTES ~

1. UNLESS OTHERWISE DESIGNATED, ALL BAR REINFORCEMENT FOR CONCRETE IN SIZES UP TO AND INCLUDING NO. 18 SHALL CONFORM TO THE REQUIREMENTS OF THE "SPECIFICATIONS FOR DEFORMED BILLET-STEEL BARS FOR CONCRETE REINFORCEMENT", AASHTO M 31 (ASTM A 615-SI). ALL BARS SHALL BE GRADE 60, UNLESS OTHERWISE DESIGNATED
2. FOR TYPICAL BENDING DETAILS, RECOMMENDED PIN DIAMETER "D" OF BENDS AND HOOKS, AND OTHER STANDARD PRACTICE, SEE CURRENT CONCRETE REINFORCING STEEL INSTITUTE "MANUAL OF STANDARD PRACTICE".
3. BARS WHICH REQUIRE MORE ACCURATE BENDING THAN STANDARD PRACTICES SHOULD HAVE LIMITS INDICATED.
4. ALL DIMENSIONS ARE OUT TO OUT OF BAR EXCEPT "A" AND "G" ON STANDARD 180 DEGREE AND 135 DEGREE HOOKS.
5. "J" DIMENSION ON 180 DEGREE HOOKS TO BE SHOWN ONLY WHERE NECESSARY TO RESTRICT HOOK SIZE. OTHERWISE, STANDARD HOOKS ARE TO BE USED.
6. "H" DIMENSION ON STIRRUPS TO BE SHOWN ONLY WHEN NECESSARY TO MAINTAIN CLEARANCES.
7. WHERE SLOPE DIFFERS FROM 45 DEGREES, DIMENSIONS "H" AND "K" MUST BE SHOWN.
8. ▲ DENOTES BARS TO BE CUT IN FIELD.
9. ✳ DENOTES ONE EXTRA BAR ADDED FOR TESTING PURPOSES.
10. △ DENOTES TWO EXTRA BARS ADDED FOR TESTING PURPOSES.
11. .3 IN BAR MARK SUFFIX DENOTES LEVEL III REINFORCING STEEL.

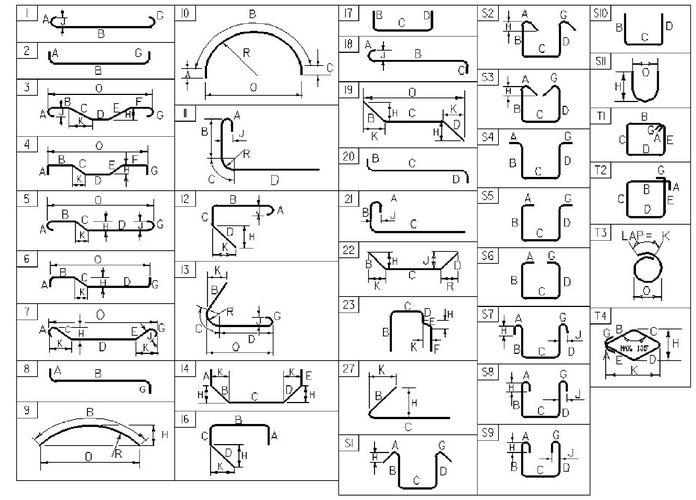

ASTM STANDARD REINFORCING BARS

BAR SIZE DESIGNATION	WEIGHT POUNDS PER FOOT	NOMINAL DIMENSIONS ROUND SECTION DIAMETER INCHES	AREA INCHES²	PERIMETER INCHES
#3	0.376	0.375	0.11	1.178
#4	0.668	0.500	0.20	1.571
#5	1.043	0.625	0.31	1.963
#6	1.502	0.750	0.44	2.356
#7	2.044	0.875	0.60	2.749
#8	2.670	1.000	0.79	3.142
#9	3.400	1.128	1.00	3.544
#10	4.303	1.270	1.27	3.990
#11	5.313	1.410	1.56	4.430
#14	7.65	1.693	2.25	5.32
#18	13.60	2.257	4.00	7.09

Vermont Agency of Transportation
ANDOVER BHF 016-1 (29) - Reinforcing Schedule(1).pdf
RECEIVED
ON: June 24, 2015
and Checked for
CONFORMANCE
BY: D. PETERSON DATE: 06/25/2015

REV. NO.	DATE:
1	06/18/15

RENAUD BROS. INC.
283 FT. BRIDGEMAN RD. VERNON VT., 05354
PH. (802) 257-7383 FAX. (802) 257-7308

SHEET NAME: REINFORCING SCHEDULE
PROJECT NAME: ANDOVER
PROJECT NO: BHF 016-1 (29)
SHEET NO. 7 OF 7
DRAWN BY: CE
CHK'D BY:
DATE: 06/03/2015