MILLER CONSTRUCTION, INC.

P.O. BOX 86 ASCUTNEY BLVD WINDSOR, VERMONT 05089-0086
TELEPHONE (802) 674-5525 / FAX (802) 674-5245

TRANSMITTAL

TO: Rob Young, PE Project Manager Vermont Agency of Transportation	DATE	PROJECT NO.
	4/12/2016	Woodstock BRF 0151 (21)

XX WE ENCLOSE THE FOLLOWING: _____ UNDER SEPARATE COVER WE ARE SENDING THE FOLLOWING

COPIES	NUMBER	DESCRIPTION	CODE
1		Precast Drawings LO1A - AS6 - Rev 2 (27 Sheets)	H
1		Bolt Pocket Former	H
1		Dayton Richmond DBS	H
1		Dayton Richmond DI	H
1		Silane-Siloxane CT 00005	H
1		Splice Sleeves	H
1		SS Mortar	H
1		Precast Design Calculations - Rev 2	H

CODE:

A FOR INITIAL APPROVAL
B FOR FINAL APPROVAL
C APPROVED AS NOTED-RESUBMISSION REQUIRED
D APPROVED AS NOTED-RESUBMISSION NOT REQUIRED
E DISAPPROVED-RESUBMIT
F QUOTATION REQUESTED
G APPROVED
H FOR APPROVAL
I AS REQUESTED OR REQUIRED
J FOR USE IN ERECTION
K LETTER FOLLOWS
L FOR FIELD CHECK
M FOR YOUR USE

BY: _____

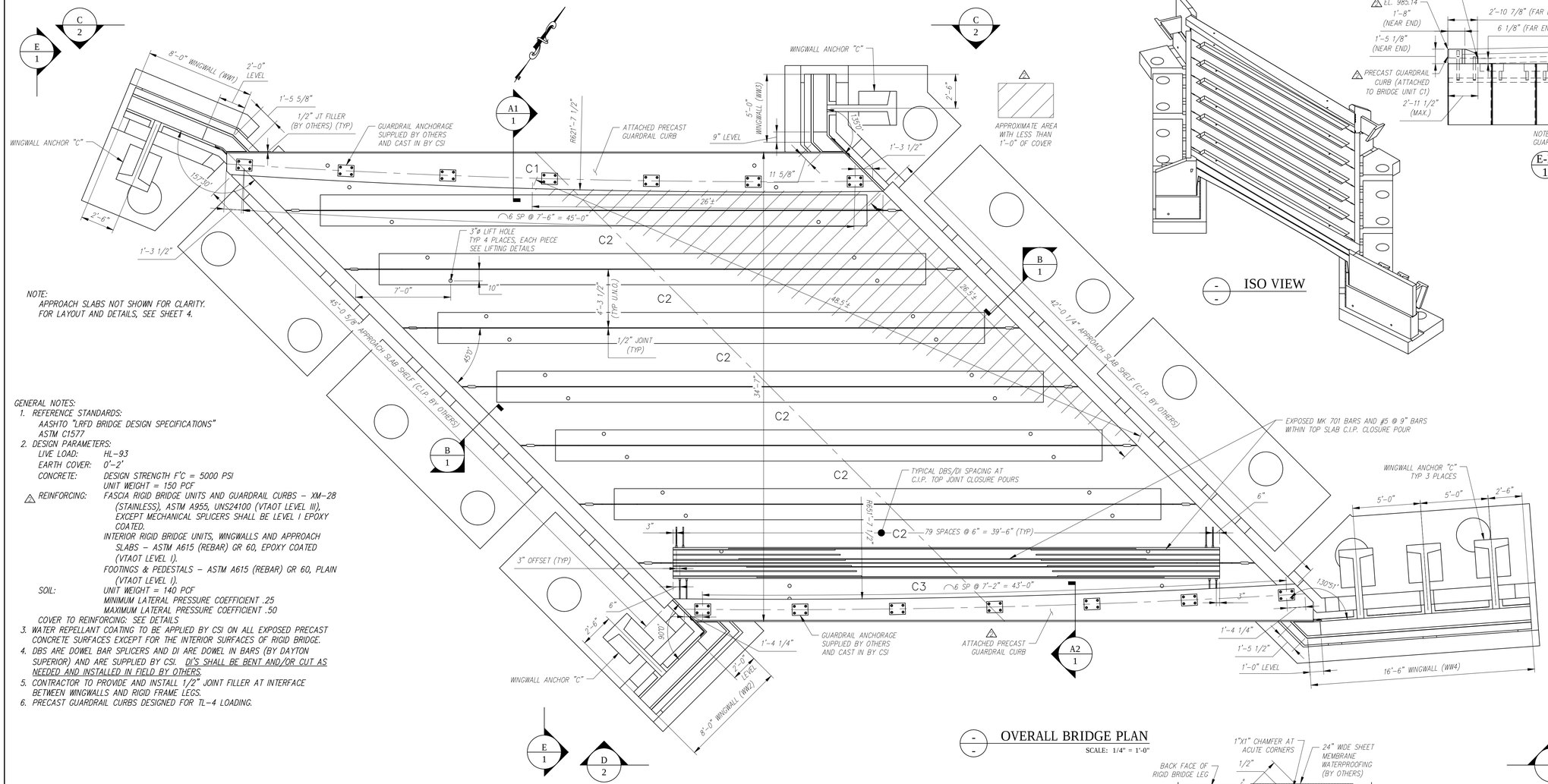

NOTE:
APPROACH SLABS NOT SHOWN FOR CLARITY.
FOR LAYOUT AND DETAILS, SEE SHEET 4.

GENERAL NOTES:

1. REFERENCE STANDARDS:
   AASHTO "LRFD BIDGE DESIGN SPECIFICATIONS"
   ASTM C1577
2. DESIGN PARAMETERS:
   LIVE LOAD: HL-93
   EARTH COVER: 0'-2'
   CONCRETE: DESIGN STRENGTH F'C = 5000 PSI
   UNIT WEIGHT = 150 PCF
   △ REINFORCING: FASCIA RIGID BRIDGE UNITS AND GUARDRAIL CURBS – XM-28 (STAINLESS), ASTM A955, UNS24100 (VTAOT LEVEL III), EXCEPT MECHANICAL SPLICERS SHALL BE LEVEL I EPOXY COATED.
   INTERIOR RIGID BRIDGE UNITS, WINGWALLS AND APPROACH SLABS – ASTM A615 (REBAR) GR 60, EPOXY COATED (VTAOT LEVEL I).
   FOOTINGS & PEDESTALS – ASTM A615 (REBAR) GR 60, PLAIN (VTAOT LEVEL I).
   SOIL: UNIT WEIGHT = 140 PCF
   MINIMUM LATERAL PRESSURE COEFFICIENT .25
   MAXIMUM LATERAL PRESSURE COEFFICIENT .50
   COVER TO REINFORCING: SEE DETAILS
3. WATER REPELLANT COATING TO BE APPLIED BY CSI ON ALL EXPOSED PRECAST CONCRETE SURFACES EXCEPT FOR THE INTERIOR SURFACES OF RIGID BRIDGE.
4. DBS ARE DOWEL BAR SPLICERS AND DI ARE DOWEL IN BARS (BY DAYTON SUPERIOR) AND ARE SUPPLIED BY CSI. DI'S SHALL BE BENT AND/OR CUT AS NEEDED AND INSTALLED IN FIELD BY OTHERS.
5. CONTRACTOR TO PROVIDE AND INSTALL 1/2" JOINT FILLER AT INTERFACE BETWEEN WINGWALLS AND RIGID FRAME LEGS.
6. PRECAST GUARDRAIL CURBS DESIGNED FOR TL-4 LOADING.

△ SEE SHOP DRAWINGS FOR ADDITIONAL DETAILS.

OVERALL BRIDGE PLAN
SCALE: 1/4" = 1'-0"

ISO VIEW

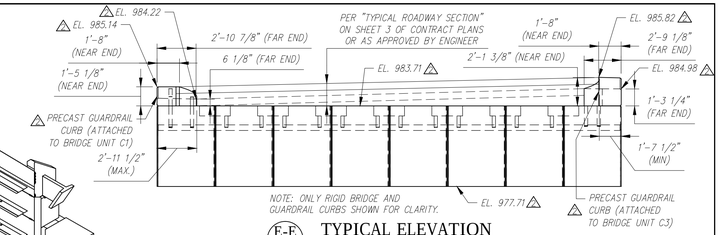

E-E / 1 TYPICAL ELEVATION
SCALE: 3/16" = 1'-0"

RIGID BRIDGE, WINGWALL & GUARDRAIL CURB PIECE SCHEDULE (MX-FA5000SC30)

MARK	QTY	LENGTH	YDS	WEIGHT	
C1	1	4.29 '	16.36	33.13	TONS
C2	6	4.29 '	10.88	22.02	TONS
△ C3	1	4.29 '	17.63	35.71	TONS
WW1	1	8.00 '	2.41	5.78	TONS
WW2	1	8.00 '	2.32	5.59	TONS
WW3	1	5.00 '	1.29	3.51	TONS
WW4	1	16.50 '	4.68	12.18	TONS

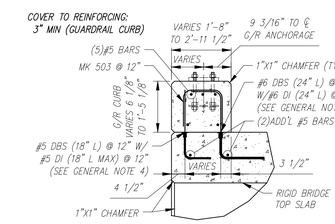

△ A1 / 1 SECTION AT NORTH ATTACHED GUARDRAIL CURB
SCALE: 1/2" = 1'-0"

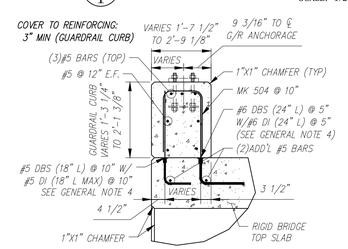

△ A2 / 1 SECTION AT SOUTH ATTACHED GUARDRAIL CURB
SCALE: 1/2" = 1'-0"

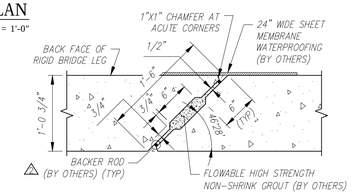

RIGID FRAME LEG JOINT DETAIL
SCALE: 1" = 1'-0"

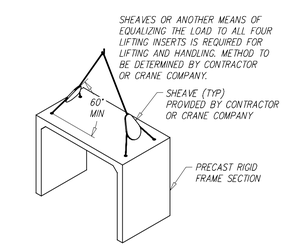

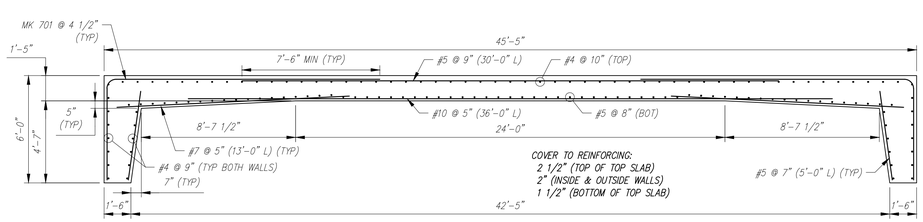

TYPICAL RIGID BRIDGE REINFORCING SECTION
SCALE: 1/4" = 1'-0"

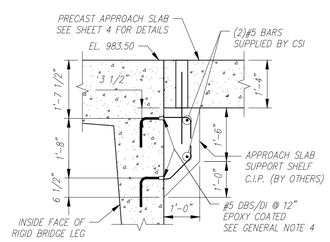

△ B / 1 APPR. SLAB SUPPORT SHELF (TYPICAL SECTION)
SCALE: 1/2" = 1'-0"

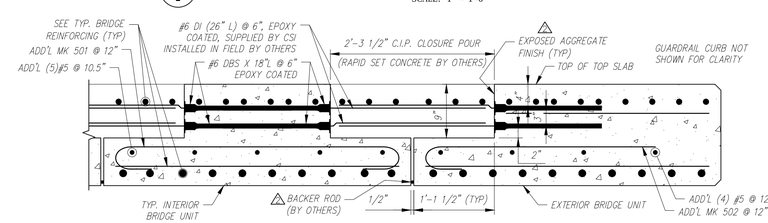

RIGID FRAME TOP SLAB JOINT DETAIL
SCALE: 1" = 1'-0"

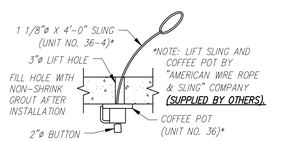

LIFTING DETAILS
SCALE: N.T.S.

Contractor is to verify that all information shown on drawings has been thoroughly checked, complies with the contract documents and is adequate to meet the field conditions. Some dimensions and details may differ slightly from contract drawings to accommodate the manufacturing or design process. Approval of this drawing indicates that any deviation from the contract documents has been reviewed and found to be acceptable. Production will not commence until receipt of signed, approved shop drawings.

This drawing contains information proprietary to CONCRETE SYSTEMS, INC. This drawing is disclosed with the understanding that it will be retained in confidence and its use limited solely to the purpose for which it is disclosed. It is understood that no reproduction of this drawing is authorized without permission from CONCRETE SYSTEMS, INC. and that it will be returned to CONCRETE SYSTEMS, INC. upon request.

STRUCTURAL DESIGN OF RIGID BRIDGE, GUARDRAIL CURBS AND WINGWALLS ONLY

Rev.	Date	DESCRIPTION	By
10			
9			
8			
7			
6			
5			
4			
3			
2	04/08/2016	SEE REV2 TRIANGLES.	AK
1	03/23/2016	SEE REV1 TRIANGLES.	AK

REVISIONS

This drawing is based upon information provided from the following documents and/or sources:
Engineer: STANTEC CONSULTING SERVICES, INC.
Project No:
Drawings: PROJECT PLANS
Specifications:
Other Sources:

CSI Concrete Systems Inc.
9 Commercial St., Hudson, NH 03051
Phone 603-889-4163
Fax 603-889-2417

STATE AGENCY
VTrans Working to Get You There
Drawn By: A KOSTENKO Date: 02/03/2016
Reviewed By Date
Approved By Date

VTAOT PROJ. NO.: BRF 0151(21)

MILLER CONSTRUCTION, INC.
ROUTE 106 BRIDGE REPLACEMENT T.H. 61 (KENDALL ROAD)
WOODSTOCK, VT

D — PRECAST RIGID BRIDGE LAYOUT & DETAILS — REV 2
Drawing No. R-S22624-L01A
Quantity: Project No: SHEET 1 OF 4

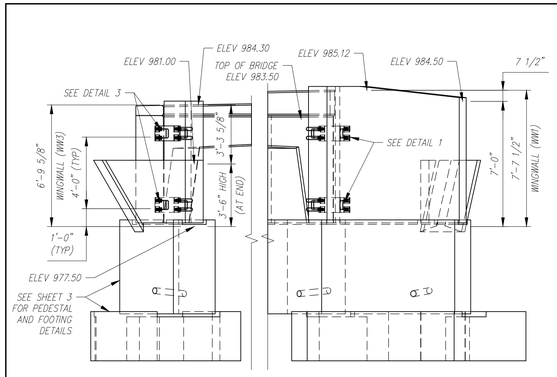

C-C / 1 WEST END ELEVATION

SCALE: 1/4" = 1'-0"

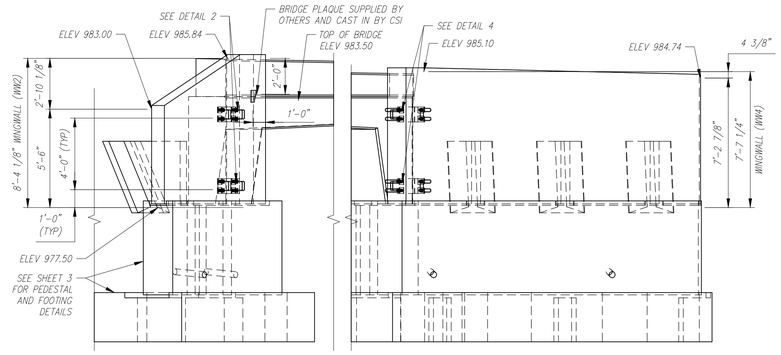

D-D / 1 EAST END ELEVATION

SCALE: 1/4" = 1'-0"

WINGWALL GENERAL NOTES:

1. REFERENCE STANDARD:
   AASHTO LRFD SPECIFICATIONS
2. DESIGN PARAMETERS:
   SOIL BEARING: 3000 PSF (TO BE VERIFIED BY ENGINEER)
   CONCRETE: DESIGN STRENGTH f'C = 4000 PSI
   UNIT WEIGHT = 150 PCF
   △ REINFORCING: ASTM A615 (REBAR), GRADE 60, EPOXY COATED (VTAOT LEVEL I).
   SOIL: UNIT WEIGHT = 140 PCF
   MINIMUM LATERAL PRESSURE COEFFICIENT .25
   MAXIMUM LATERAL PRESSURE COEFFICIENT .50
   COVER TO REINFORCING: 2" U.N.O.
3. WINGWALLS HAVE BEEN DESIGNED FOR GENERAL SITE CONDITIONS. THE PROJECT ENGINEER SHALL BE RESPONSIBLE FOR THE STRUCTURE'S SUITABILITY TO THE EXISTING SITE CONDITIONS AND FOR THE HYDRAULIC EVALUATION, INCLUDING SCOUR AND CONFIRMATION OF SOIL CONDITIONS.
4. PRIOR TO CONSTRUCTION, CONTRACTOR MUST VERIFY ALL ELEVATIONS SHOWN THROUGH THE ENGINEER.

△ SEE SHOP DRAWINGS FOR ADDITIONAL DETAILS.

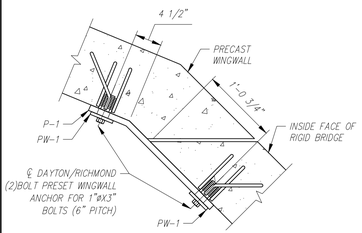

1 / 2 DETAIL

Scale: 1 = 1'-0"

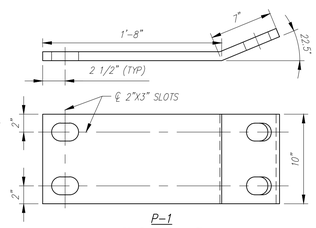

P-1

(℄ 1" X 10" X 14")
(GALVANIZED AS PER ASTM A153)
(TOTAL REQUIRED = 2)

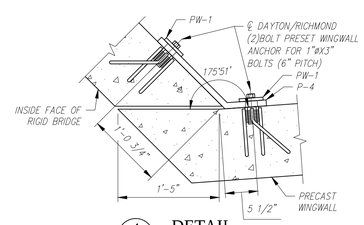

4 / 2 DETAIL

Scale: 1 = 1'-0"

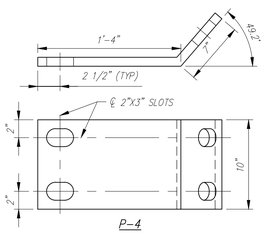

P-4

(℄ 1" X 10" X 14")
(GALVANIZED AS PER ASTM A153)
(TOTAL REQUIRED = 2)

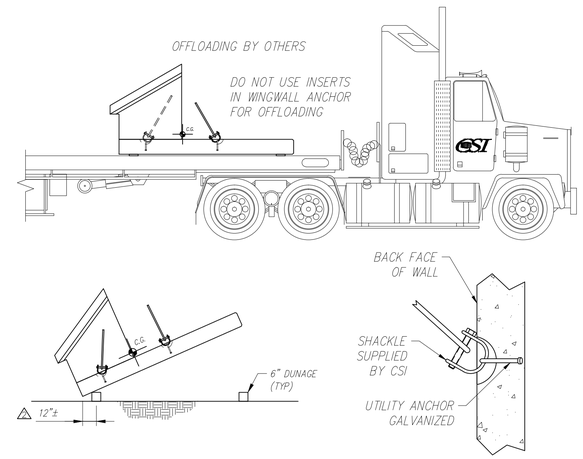

- / - WINGWALL LIFTING/OFFLOADING & TRIPPING DETAILS

Scale: N.T.S.

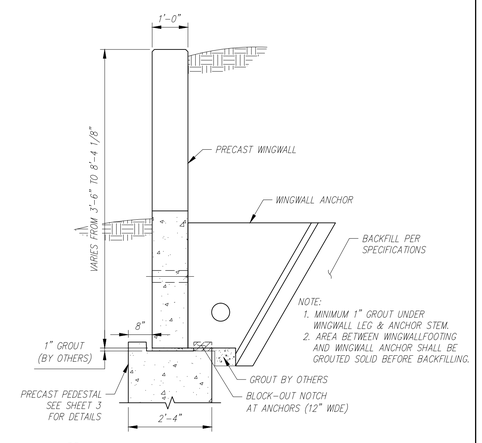

NOTE:
1. MINIMUM 1" GROUT UNDER WINGWALL LEG & ANCHOR STEM.
2. AREA BETWEEN WINGWALLFOOTING AND WINGWALL ANCHOR SHALL BE GROUTED SOLID BEFORE BACKFILLING.

- / - TYPICAL WINGWALL SECTION

SCALE: 1/2" = 1'-0"

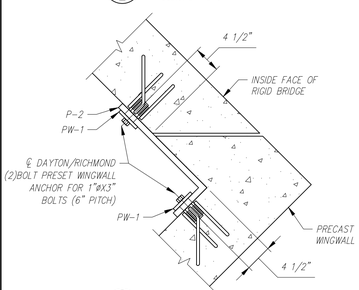

2 / 2 DETAIL

Scale: 1 = 1'-0"

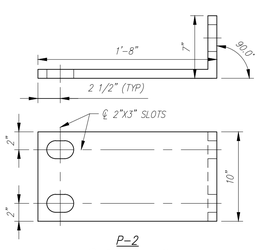

P-2

(℄ 1" X 10" X 14")
(GALVANIZED AS PER ASTM A153)
(TOTAL REQUIRED = 2)

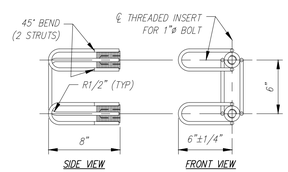

DAYTON/RICHMOND TWO BOLT PRESET ANCHOR

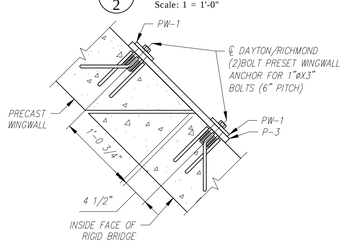

3 / 2 DETAIL

Scale: 1 = 1'-0"

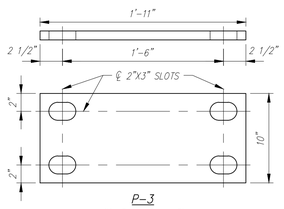

P-3

(℄ 1" X 10" X 14")
(GALVANIZED AS PER ASTM A153)
(TOTAL REQUIRED = 2)

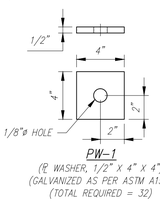

PW-1

(℄ WASHER, 1/2" X 4" X 4")
(GALVANIZED AS PER ASTM A153)
(TOTAL REQUIRED = 32)

BACKFILL DESCRIPTION

Group Classification	A-1		A-3	A-2			
	A-1-a	A-1-b		A-2-4	A-2-5	A-2-6	A-2-7
Sieve Analysis, Percent Passing							
No. 10	50 max.						
No. 40	30 max.	50 max.	51 min.				
No. 200	15 max.	25 max.	10 max.	35 max.	35 max.	35 max.	35 max.
Characteristics of Fraction Passing No. 40							
Liquid Limit				40 max.	41 min.	40 max.	41 min.
Plasticity Index	6 max.		N.P.	10 max.	10 max.	11 min.	11 min.
Usual Types of Significant Constituent Materials	Stone Fragments, Gravel & Sand		Fine Sand	Silty or Clayey Gravel and Sand			
General Rating as Subgrade			Excellent to Good				

NOTES
1. BACKFILLING OPERATIONS WITHIN THE C.B.Z. SHALL BE PERFORMED IN LIFTS OF 8" OR LESS (LOOSE DEPTH).
2. MAXIMUM DRY DENSITY SHALL BE DETERMINED BY AASHTO T-99 OR OTHER APPROVED METHODS.
3. BACKFILL SHALL BE COMPACTED IN LAYERS UNTIL THE DENSITY IS NOT LESS THAN 95% OF THE MAXIMUM DRY DENSITY.

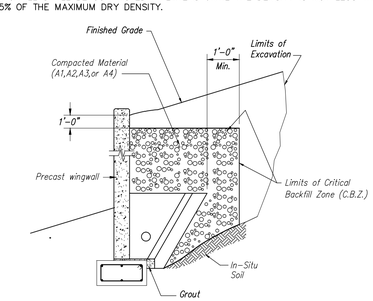

WINGWALL BACKFILL REQUIREMENTS

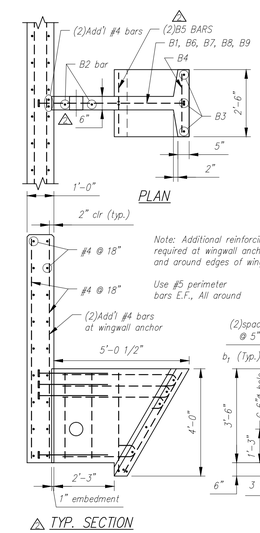

△ TYP. SECTION

Note: Additional reinforcing required at wingwall anchors and around edges of wingwall

Use #5 perimeter bars E.F., All around

BAR LIST

MARK	QTY.	SIZE	a	TYPE	LENGTH
B1	4	#6	2'-7"	3	——
B2	2	#5	——	Str.	3'-2"
B3	4	#5	——	Str.	4'-2"
B4	7	#5	——	Str.	2'-2"
B5	2	#5	3'-8"	2	——
B6	1	#5	2'-9"	1	——
B7	1	#5	3'-9"	1	——
B8	1	#5	4'-0"	1	——
B9	1	#5	4'-3"	1	——

Note: "Str." denotes straight bar. Standard clearance = 2"

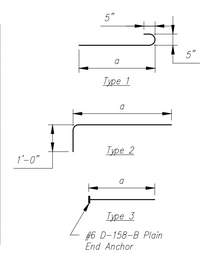

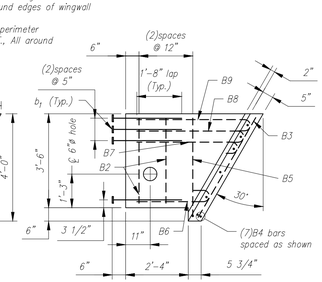

PRECAST ANCHOR TYPE C

Contractor is to verify that all information shown on drawings has been thoroughly checked, complies with the contract documents and is adequate to meet the field conditions. Some dimensions and details may differ slightly from contract drawings to accommodate the manufacturing or design process. Approval of this drawing indicates that any deviation from the contract documents has been reviewed and found to be acceptable. Production will not commence until receipt of signed, approved shop drawings.

This drawing contains information proprietary to CONCRETE SYSTEMS, INC. This drawing is disclosed with the understanding that it will be retained in confidence and its use limited solely to the purpose for which it is disclosed. It is understood that no reproduction of this drawing is authorized without permission from CONCRETE SYSTEMS, INC. and that it will be returned to CONCRETE SYSTEMS, INC. upon request.

STRUCTURAL DESIGN OF RIGID BRIDGE, GUARDRAIL CURBS AND WINGWALLS ONLY

Rev.	Date	DESCRIPTION	By
10			
9			
8			
7			
6			
5			
4			
3			
2	04/08/2016	SEE REV2 TRIANGLES.	AK
1	03/23/2016	SEE REV1 TRIANGLES.	AK

REVISIONS

This drawing is based upon information provided from the following documents and/or sources:

Engineer: STANTEC CONSULTING SERVICES, INC.
Project No:
Drawings: PROJECT PLANS
Specifications:
Other Sources:

Concrete Systems Inc.
9 Commercial St., Hudson, NH,03051
Phone 603-889-4163
Fax 603-889-2417

STATE AGENCY
VTrans Working to Get You There

Drawn By: A. KOSTENKO — Date: 02/03/2016
Reviewed By — Date
Approved By — Date

VTAOT PROJ. NO.: BRF 0151(21)

MILLER CONSTRUCTION, INC.
ROUTE 106 BRIDGE REPLACEMENT T.H. 61 (KENDALL ROAD)
WOODSTOCK, VT

D — ELEVATIONS AND WINGWALL DETAILS — REV 2
Drawing No. R-S22624-L01B
Quantity: — Project No: — SHEET 2 OF 4

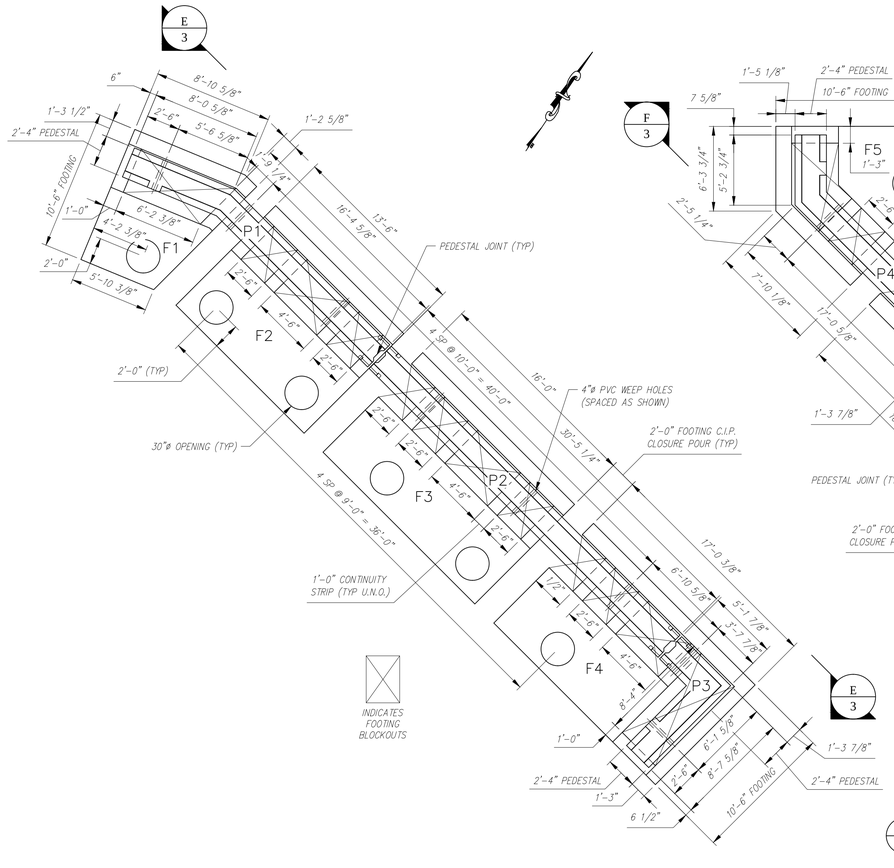

FOOTING & PEDESTAL PLAN
SCALE: 3/16" = 1'-0"

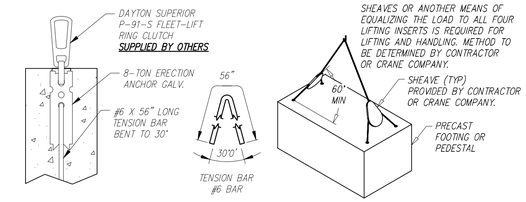

TYPICAL LIFTING DETAILS
SCALE: N.T.S.

FOOTING AND PEDESTAL PIECE SCHEDULE (MX-FA5000SC30)					
MARK	QTY	LENGTH	YDS	WEIGHT	
F1	1	7.99 '	5.52	11.18	TONS
F2	1	13.50 '	9.90	20.05	TONS
F3	1	16.00 '	11.68	23.66	TONS
F4	1	17.03 '	11.20	22.69	TONS
F5	1	9.81 '	6.84	13.84	TONS
F6	1	16.00 '	11.68	23.66	TONS
F7	1	18.50 '	13.46	27.27	TONS
F8	1	18.11 '	12.59	25.49	TONS
P1	1	23.98 '	10.53	21.31	TONS
P2	2	30.44 '	13.35	27.04	TONS
P3	1	11.46 '	5.01	10.15	TONS
P4	1	21.32 '	9.36	18.95	TONS
P5	1	19.96 '	8.75	17.72	TONS

△ SEE SHOP DRAWINGS FOR ADDITIONAL DETAILS.

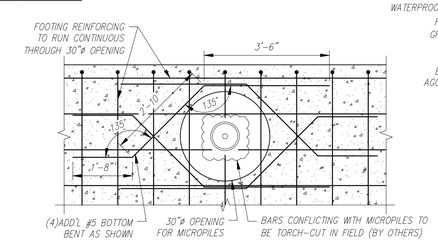

ADDITIONAL REINFORCING AT 30" OPENINGS
SCALE: 1/2" = 1'-0"

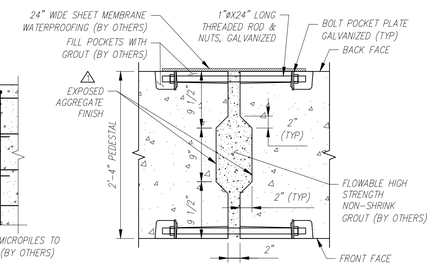

PEDESTAL JOINT DETAIL
SCALE: N.T.S.

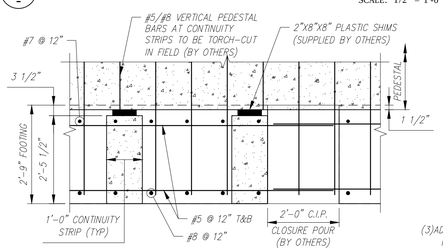

TYP. SECTION THROUGH CONTINUITY STRIPS
SCALE: 1/2" = 1'-0"

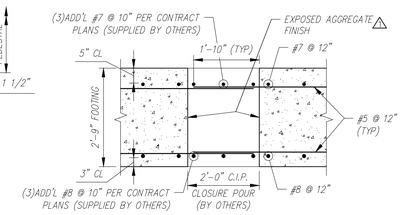

FOOTING CLOSURE POUR DETAIL
SCALE: 1/2" = 1'-0"

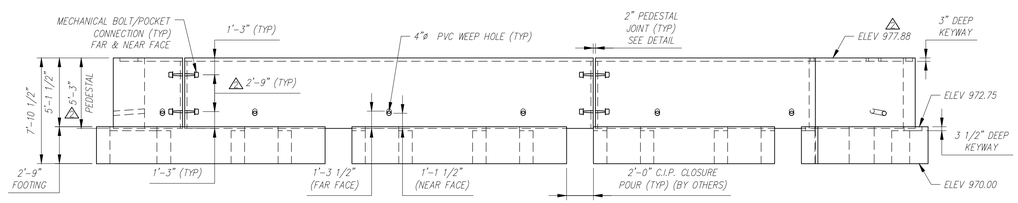

SOUTH FOOTING/PEDESTAL ELEVATION
SCALE: 3/16" = 1'-0"

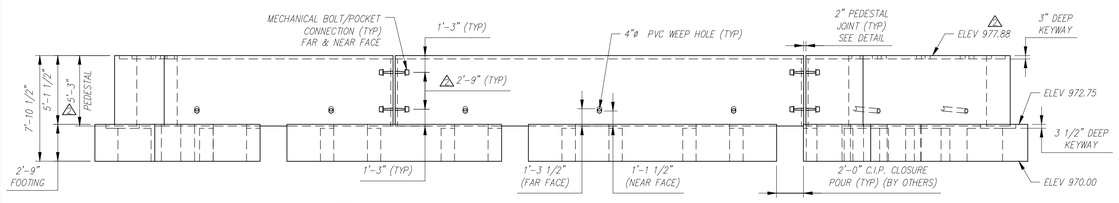

NORTH FOOTING/PEDESTAL ELEVATION
SCALE: 3/16" = 1'-0"

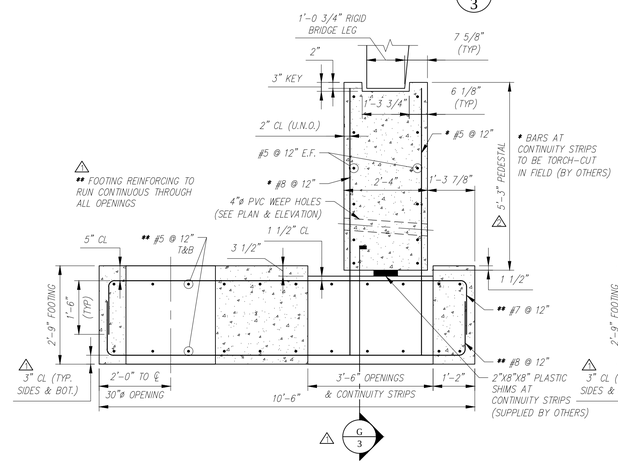

FOOTING & PEDESTAL SECTION (AT RIGID BRIDGE LEG)
SCALE: 1/2" = 1'-0"

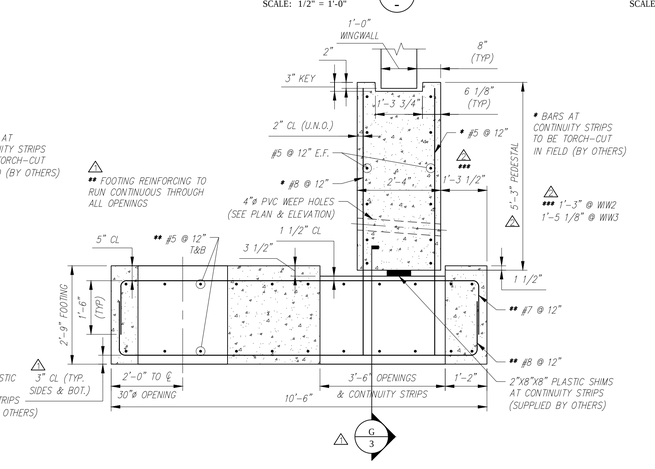

FOOTING & PEDESTAL SECTION (AT WINGWALLS)
SCALE: 1/2" = 1'-0"

Contractor is to verify that all information shown on drawings has been thoroughly checked, complies with the contract documents and is adequate to meet the field conditions. Some dimensions and details may differ slightly from contract drawings to accommodate the manufacturing or design process. Approval of this drawing indicates that any deviation from the contract documents has been reviewed and found to be acceptable. Production will not commence until receipt of signed, approved shop drawings.

This drawing contains information proprietary to CONCRETE SYSTEMS, INC. This drawing is disclosed with the understanding that it will be retained in confidence and its use limited solely to the purpose for which it is disclosed. It is understood that no reproduction of this drawing is authorized without permission from CONCRETE SYSTEMS, INC. and that it will be returned to CONCRETE SYSTEMS, INC. upon request.

Rev.	Date	DESCRIPTION	By
10			
9			
8			
7			
6			
5			
4			
3			
2			
1	04/08/2016	SEE REV 1 TRIANGLES.	AK

REVISIONS

This drawing is based upon information provided from the following documents and/or sources:
Engineer: STANTEC CONSULTING SERVICES, INC.
Project No:
Drawings: PROJECT PLANS
Specifications:
Other Sources:

Concrete Systems Inc.
9 Commercial St., Hudson, NH 03051
Phone 603-889-4163
Fax 603-889-2417

STATE AGENCY
VTrans Working to Get You There

Drawn By A. KOSTENKO	Date 03/03/2016
Reviewed By	Date
Approved By	Date

VTAOT PROJ. NO.: BRF 0151(21)

MILLER CONSTRUCTION, INC.
ROUTE 106 BRIDGE REPLACEMENT T.H. 61 (KENDALL ROAD)
WOODSTOCK, VT

D — FOOTING/PEDESTAL PLAN AND DETAILS — REV 1
Drawing No. R-S22624-L01C

Quantity: | Project No: | SHEET 3 OF 4

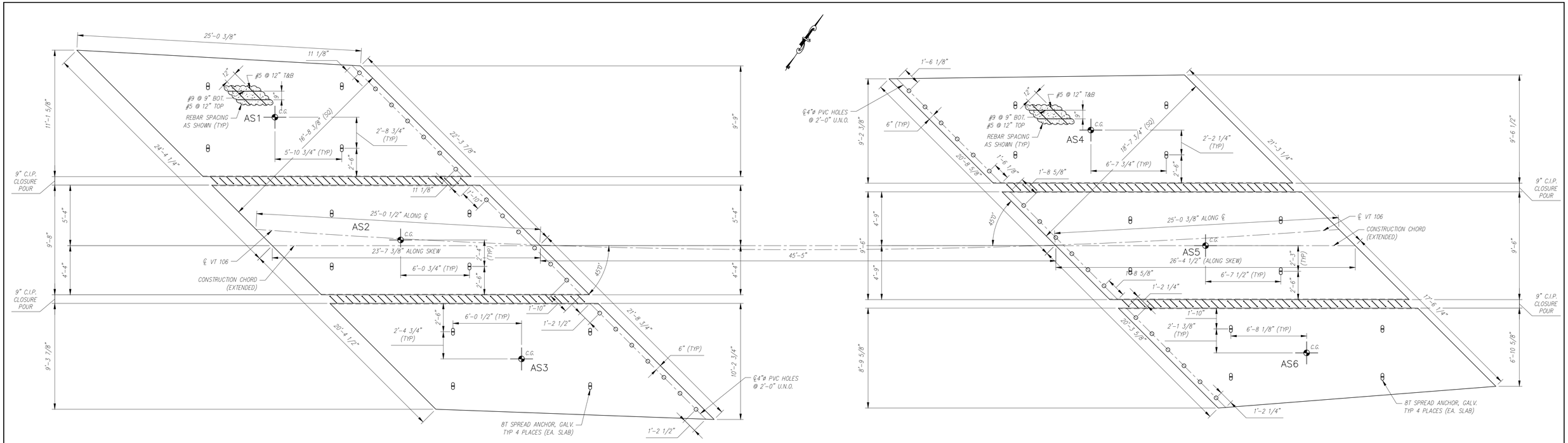

APPROACH SLAB PLAN

SCALE: 1/4" = 1'-0"

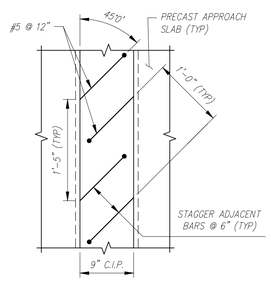

TYPICAL C.I.P. CLOSURE POUR PLAN

SCALE: 1" = 1'-0"

⚠ SEE SHOP DRAWINGS FOR ADDITIONAL DETAILS.

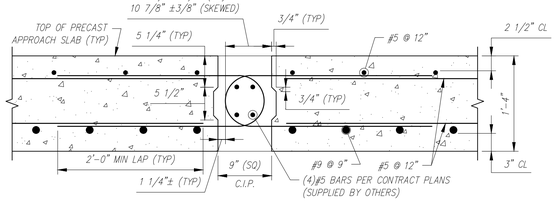

TYPICAL C.I.P. CLOSURE POUR SECTION

SCALE: 1" = 1'-0"

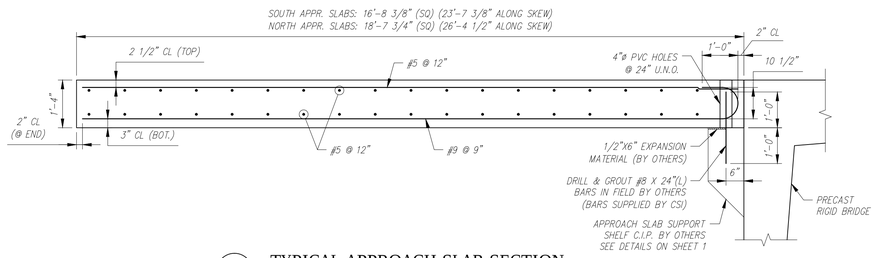

TYPICAL APPROACH SLAB SECTION

SCALE: 1/2" = 1'-0"

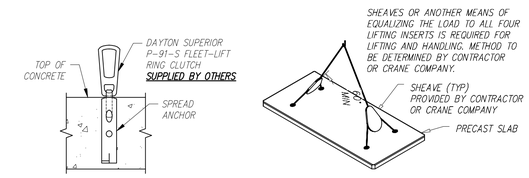

APPROACH SLAB LIFTING DETAILS

SCALE: N.T.S.

APPROACH SLAB PIECE SCHEDULE (MX-FA5000SC30)					
MARK	QTY	LENGTH	YDS	WEIGHT	
AS1	1	23.61 '	12.18	24.67	TONS
AS2	1	23.61 '	11.27	22.83	TONS
AS3	1	23.61 '	11.40	23.09	TONS
AS4	1	26.38 '	12.20	24.71	TONS
AS5	1	26.38 '	12.37	25.06	TONS
AS6	1	26.38 '	10.22	20.70	TONS

Contractor is to verify that all information shown on drawings has been thoroughly checked, complies with the contract documents and is adequate to meet the field conditions. Some dimensions and details may differ slightly from contract drawings to accommodate the manufacturing or design process. Approval of this drawing indicates that any deviation from the contract documents has been reviewed and found to be acceptable. Production will not commence until receipt of signed, approved shop drawings.

This drawing contains information proprietary to CONCRETE SYSTEMS, INC. This drawing is disclosed with the understanding that it will be retained in confidence and its use limited solely to the purpose for which it is disclosed. It is understood that no reproduction of this drawing is authorized without permission from CONCRETE SYSTEMS, INC. and that it will be returned to CONCRETE SYSTEMS, INC. upon request.

Rev.	Date	DESCRIPTION	By
10			
9			
8			
7			
6			
5			
4			
3			
2			
1	04/08/2016	SEE REV 1 TRIANGLES.	AK

REVISIONS

This drawing is based upon information provided from the following documents and/or sources:
Engineer: STANTEC CONSULTING SERVICES, INC.
Project No:
Drawings: PROJECT PLANS
Specifications:
Other Sources:

Concrete Systems Inc.
9 Commercial St., Hudson, NH,03051
Phone 603-889-4163
Fax 603-889-2417

STATE AGENCY
VTrans Working to Get You There

Drawn By	Date
A KOSTENKO	03/03/2016
Reviewed By	Date
Approved By	Date

VTAOT PROJ. NO.: BRF 0151(21)

MILLER CONSTRUCTION, INC.
ROUTE 106 BRIDGE REPLACEMENT T.H. 61 (KENDALL ROAD)
WOODSTOCK, VT

D — APPROACH SLAB PLAN AND DETAILS — REV 1
Drawing No. R-S22624-L01D
Quantity: Project No: SHEET 4 OF 4

NOTES:
1. ALL REINFORCING TO BE EPOXY COATED.
2. ALL EXPOSED EDGES TO BE 1" CHAMFERED.
3. COVER TO REINFORCING: 2" U.N.O.
4. WATER REPELLANT COATING TO BE APPLIED ON FRONT, TOP AND 1.5' DOWN BACK FACE.

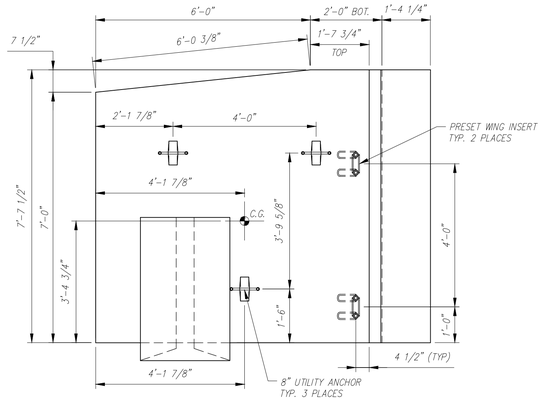

PLAN (CASTING POSITION)
SCALE: 1/2" = 1'-0"

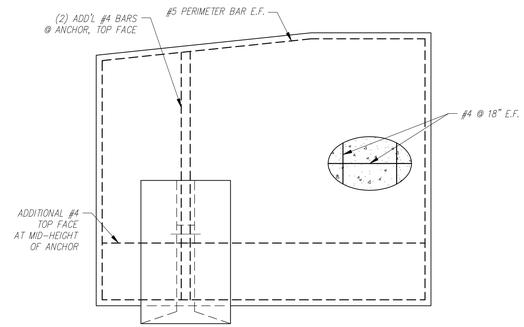

REINFORCING PLAN
SCALE: 1/2" = 1'-0"

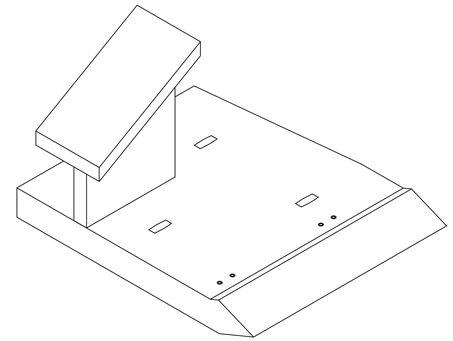

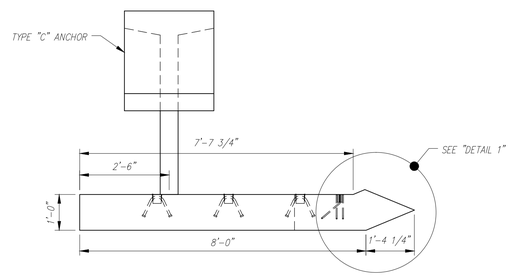

ELEVATION
SCALE: 1/2" = 1'-0"

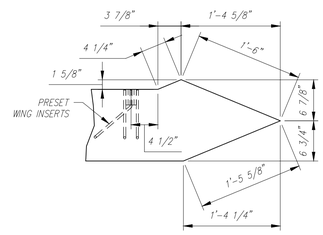

DETAIL
SCALE: 1" = 1'-0"

PIECE QUANTITY: 1 EACH
WEIGHT: 5.78 TONS

Contractor is to verify that all information shown on drawings has been thoroughly checked, complies with the contract documents and is adequate to meet the field conditions. Some dimensions and details may differ slightly from contract drawings to accommodate the manufacturing or design process. Approval of this drawing indicates that any deviation from the contract documents has been reviewed and found to be acceptable. Production will not commence until receipt of signed, approved shop drawings.

This drawing contains information proprietary to CONCRETE SYSTEMS, INC. This drawing is disclosed with the understanding that it will be retained in confidence and its use limited solely to the purpose for which it is disclosed. It is understood that no reproduction of this drawing is authorized without permission from CONCRETE SYSTEMS, INC. and that it will be returned to CONCRETE SYSTEMS, INC. upon request.

Rev.	Date	DESCRIPTION	By
10			
9			
8			
7			
6			
5			
4			
3			
2			
1			

REVISIONS

This drawing is based upon information provided from the following documents and/or sources:
Engineer: STANTEC CONSULTING SERVICES, INC.
Project No:
Drawings: PROJECT PLANS
Specifications:
Other Sources:

Concrete Systems Inc.
9 Commercial St., Hudson, NH,03051
Phone 603-889-4163
Fax 603-889-2417

STATE AGENCY
VTrans Working to Get You There VERMONT AGENCY OF TRANSPORTATION

Drawn By A KOSTENKO	Date 04/04/2016
Reviewed By	Date
Approved By	Date

VTAOT PROJ. NO.: BRF 0151(21)

MILLER CONSTRUCTION, INC.
ROUTE 106 BRIDGE REPLACEMENT T.H. 61 (KENDALL ROAD)
WOODSTOCK, VT

D | Drawing No. SHOP DRAWING – WW1 | REV 0
R-S22624-WW1

Quantity: 1 | Project No: | SHEET WW1 OF

NOTES:
1. ALL REINFORCING TO BE EPOXY COATED.
2. ALL EXPOSED EDGES TO BE 1" CHAMFERED.
3. COVER TO REINFORCING: 2" U.N.O.
4. WATER REPELLANT COATING TO BE APPLIED ON FRONT, TOP AND 1.5' DOWN BACK FACE.

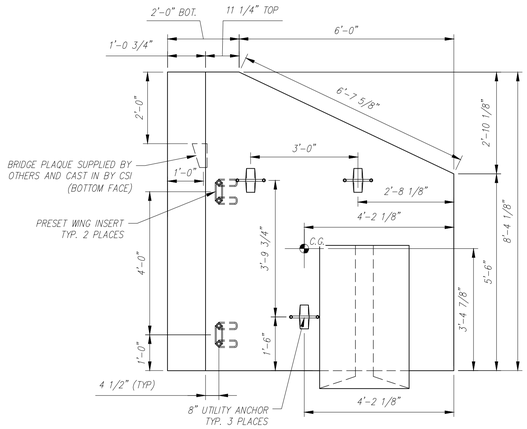

PLAN (CASTING POSITION)
SCALE: 1/2" = 1'-0"

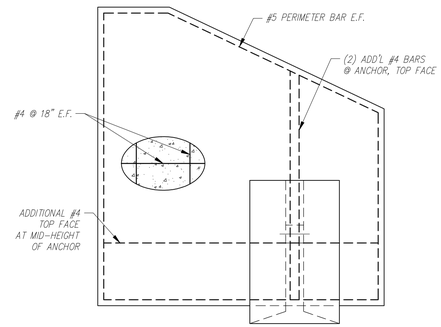

REINFORCING PLAN
SCALE: 1/2" = 1'-0"

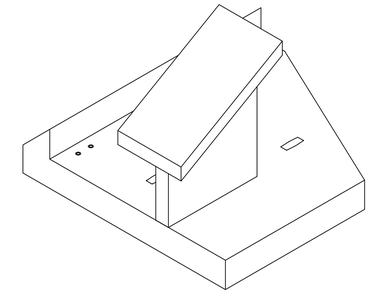

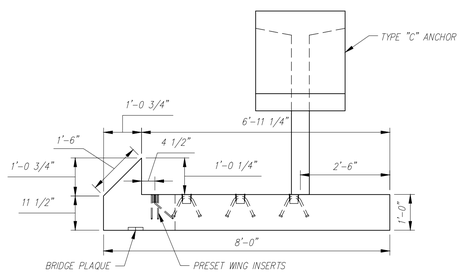

ELEVATION
SCALE: 1/2" = 1'-0"

PIECE QUANTITY: 1 EACH
WEIGHT: 5.59 TONS

Contractor is to verify that all information shown on drawings has been thoroughly checked, complies with the contract documents and is adequate to meet the field conditions. Some dimensions and details may differ slightly from contract drawings to accommodate the manufacturing or design process. Approval of this drawing indicates that any deviation from the contract documents has been reviewed and found to be acceptable. Production will not commence until receipt of signed, approved shop drawings.

This drawing contains information proprietary to CONCRETE SYSTEMS, INC. This drawing is disclosed with the understanding that it will be retained in confidence and its use limited solely to the purpose for which it is disclosed. It is understood that no reproduction of this drawing is authorized without permission from CONCRETE SYSTEMS, INC. and that it will be returned to CONCRETE SYSTEMS, INC. upon request.

Rev.	Date	DESCRIPTION	By
10			
9			
8			
7			
6			
5			
4			
3			
2			
1			

REVISIONS

This drawing is based upon information provided from the following documents and/or sources:
Engineer: STANTEC CONSULTING SERVICES, INC.
Project No:
Drawings: PROJECT PLANS
Specifications:
Other Sources:

Concrete Systems Inc.
9 Commercial St., Hudson, NH,03051
Phone 603-889-4163
Fax 603-889-2417

STATE AGENCY
VTrans Working to Get You There

Drawn By A KOSTENKO	Date 04/04/2016
Reviewed By	Date
Approved By	Date

VTAOT PROJ. NO.: BRF 0151(21)

MILLER CONSTRUCTION, INC.
ROUTE 106 BRIDGE REPLACEMENT T.H. 61 (KENDALL ROAD)
WOODSTOCK, VT

D
Drawing No. SHOP DRAWING – WW2
R-S22624-WW2
REV 0

Quantity: 1 | Project No: | SHEET WW2 OF

NOTES:
1. ALL REINFORCING TO BE EPOXY COATED.
2. ALL EXPOSED EDGES TO BE 1" CHAMFERED.
3. COVER TO REINFORCING: 2" U.N.O.
4. WATER REPELLANT COATING TO BE APPLIED ON FRONT, TOP AND 1.5' DOWN BACK FACE.

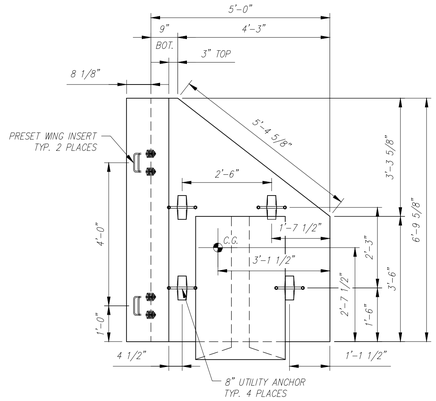

PLAN (CASTING POSITION)
SCALE: 1/2" = 1'-0"

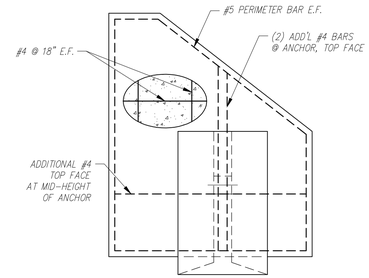

REINFORCING PLAN
SCALE: 1/2" = 1'-0"

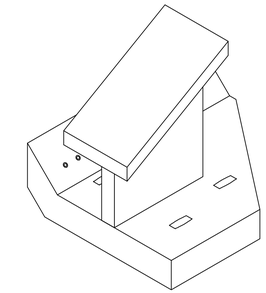

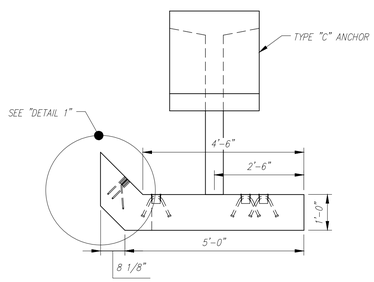

ELEVATION
SCALE: 1/2" = 1'-0"

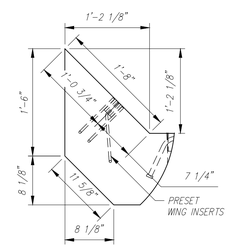

DETAIL
SCALE: 1" = 1'-0"

PIECE QUANTITY: 1 EACH
WEIGHT: 3.51 TONS

Contractor is to verify that all information shown on drawings has been thoroughly checked, complies with the contract documents and is adequate to meet the field conditions. Some dimensions and details may differ slightly from contract drawings to accommodate the manufacturing or design process. Approval of this drawing indicates that any deviation from the contract documents has been reviewed and found to be acceptable. Production will not commence until receipt of signed, approved shop drawings.

This drawing contains information proprietary to CONCRETE SYSTEMS, INC. This drawing is disclosed with the understanding that it will be retained in confidence and its use limited solely to the purpose for which it is disclosed. It is understood that no reproduction of this drawing is authorized without permission from CONCRETE SYSTEMS, INC. and that it will be returned to CONCRETE SYSTEMS, INC. upon request.

Rev.	Date	DESCRIPTION	By
10			
9			
8			
7			
6			
5			
4			
3			
2			
1			

REVISIONS

This drawing is based upon information provided from the following documents and/or sources:
Engineer: STANTEC CONSULTING SERVICES, INC.
Project No:
Drawings: PROJECT PLANS
Specifications:
Other Sources:

Concrete Systems Inc.
9 Commercial St., Hudson, NH,03051
Phone 603-889-4163
Fax 603-889-2417

STATE AGENCY
VTrans Working to Get You There

Drawn By A KOSTENKO	Date 04/04/2016
Reviewed By	Date
Approved By	Date

VTAOT PROJ. NO.: BRF 0151(21)

MILLER CONSTRUCTION, INC.
ROUTE 106 BRIDGE REPLACEMENT T.H. 61 (KENDALL ROAD)
WOODSTOCK, VT

D | Drawing No. SHOP DRAWING – WW2 | REV 0
R-S22624-WW2

Quantity: 1 | Project No: | SHEET WW2 OF

NOTES:
1. ALL REINFORCING TO BE EPOXY COATED.
2. ALL EXPOSED EDGES TO BE 1" CHAMFERED.
3. COVER TO REINFORCING: 2" U.N.O.
4. WATER REPELLANT COATING TO BE APPLIED ON FRONT, TOP AND 1.5' DOWN BACK FACE.

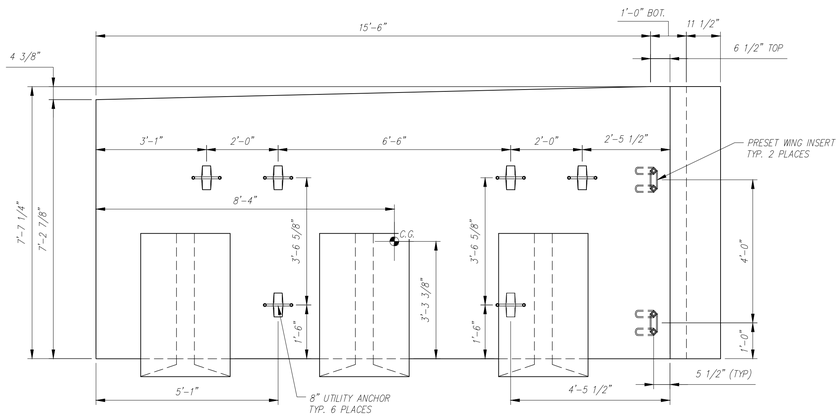

- / - PLAN (CASTING POSITION)
SCALE: 1/2" = 1'-0"

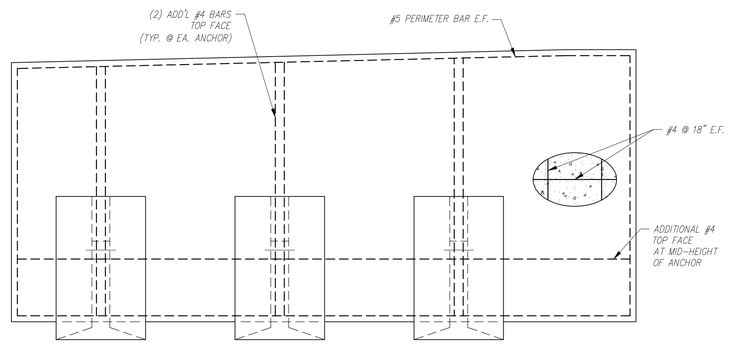

- / - REINFORCING PLAN
SCALE: 1/2" = 1'-0"

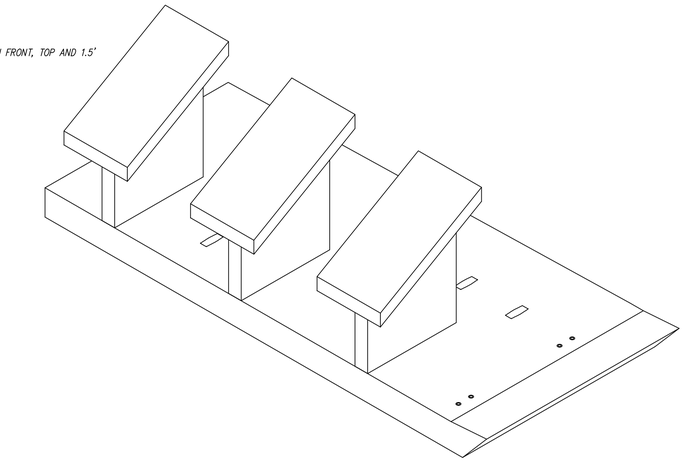

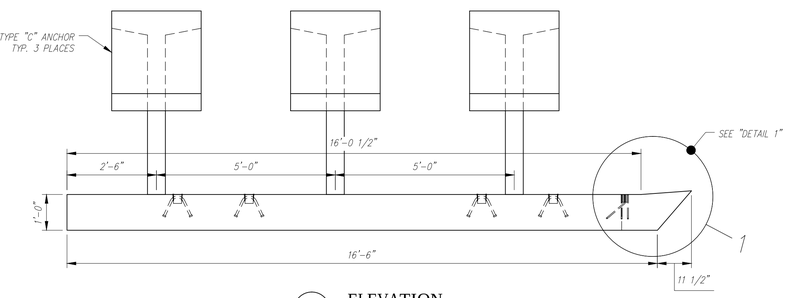

- / - ELEVATION
SCALE: 1/2" = 1'-0"

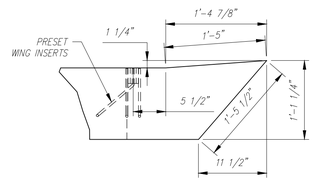

1 / - DETAIL
SCALE: 1" = 1'-0"

PIECE QUANTITY: 1 EACH
WEIGHT: 12.18 TONS

Contractor is to verify that all information shown on drawings has been thoroughly checked, complies with the contract documents and is adequate to meet the field conditions. Some dimensions and details may differ slightly from contract drawings to accommodate the manufacturing or design process. Approval of this drawing indicates that any deviation from the contract documents has been reviewed and found to be acceptable. Production will not commence until receipt of signed, approved shop drawings.

This drawing contains information proprietary to CONCRETE SYSTEMS, INC. This drawing is disclosed with the understanding that it will be retained in confidence and its use limited solely to the purpose for which it is disclosed. It is understood that no reproduction of this drawing is authorized without permission from CONCRETE SYSTEMS, INC. and that it will be returned to CONCRETE SYSTEMS, INC. upon request.

Rev.	Date	DESCRIPTION	By
10			
9			
8			
7			
6			
5			
4			
3			
2			
1			

REVISIONS

This drawing is based upon information provided from the following documents and/or sources:
Engineer: STANTEC CONSULTING SERVICES, INC.
Project No:
Drawings: PROJECT PLANS
Specifications:
Other Sources:

Concrete Systems Inc.
9 Commercial St., Hudson, NH,03051
Phone 603-889-4163
Fax 603-889-2417

STATE AGENCY
VTrans Working to Get You There

Drawn By A KOSTENKO	Date 04/04/2016
Reviewed By	Date
Approved By	Date

VTAOT PROJ. NO.: BRF 0151(21)

MILLER CONSTRUCTION, INC.
ROUTE 106 BRIDGE REPLACEMENT T.H. 61 (KENDALL ROAD)
WOODSTOCK, VT

D | Drawing No. SHOP DRAWING – WW4 / R-S22624-WW4 | REV 0

Quantity: 1 | Project No: | SHEET WW4 OF

NOTES:
1. ALL REINFORCING TO BE LEVEL I, BLACK (UNCOATED).
2. COVER TO REINFORCING: SEE DETAILS

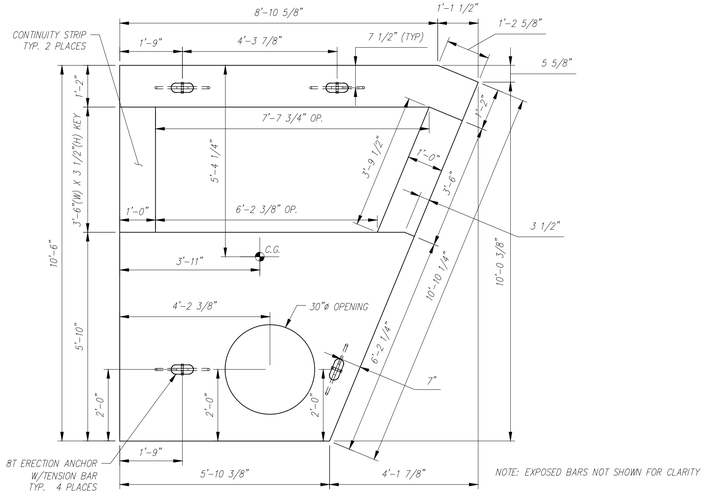

PLAN VIEW
SCALE: 1/2" = 1'-0"

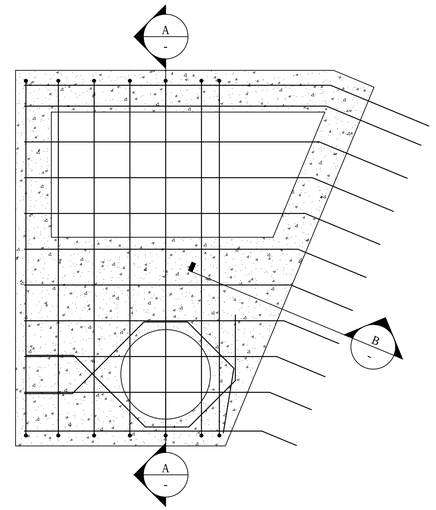

REINFORCING PLAN
SCALE: 1/2" = 1'-0"

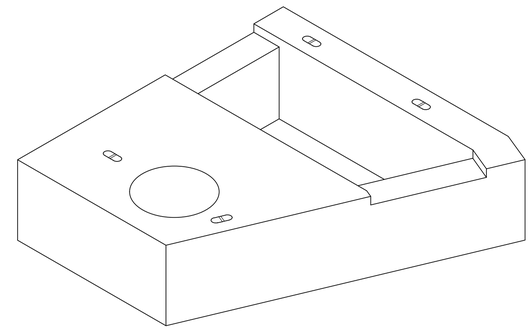

NOTE: EXPOSED BARS NOT SHOWN FOR CLARITY

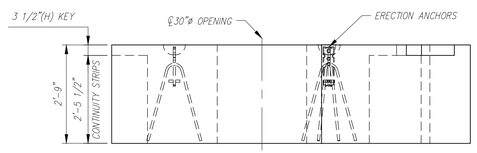

NOTE: EXPOSED BARS NOT SHOWN FOR CLARITY

FRONT ELEVATION
SCALE: 1/2" = 1'-0"

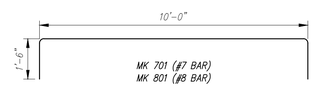

** FOOTING REINFORCING TO RUN CONTINUOUS THROUGH ALL OPENING(S)

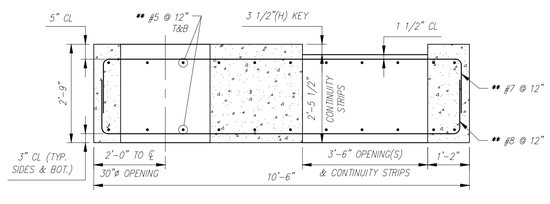

TYP. REINFORCING SECTION
SCALE: 1/2" = 1'-0"

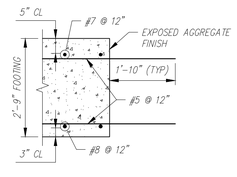

REINFORCING SECTION
SCALE: 1/2" = 1'-0"

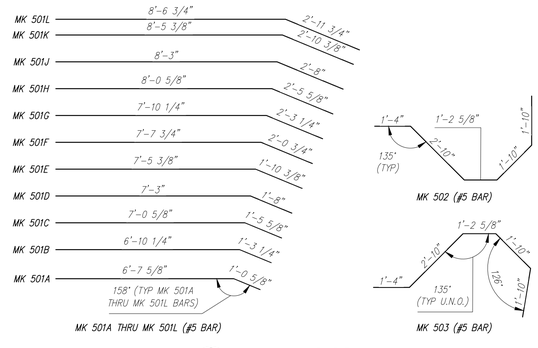

BENDING SCHEDULE
SCALE: 3/8" = 1'-0"

PIECE QUANTITY: 1 EACH
WEIGHT: 11.18 TONS

Contractor is to verify that all information shown on drawings has been thoroughly checked, complies with the contract documents and is adequate to meet the field conditions. Some dimensions and details may differ slightly from contract drawings to accommodate the manufacturing or design process. Approval of this drawing indicates that any deviation from the contract documents has been reviewed and found to be acceptable. Production will not commence until receipt of signed, approved shop drawings.

This drawing contains information proprietary to CONCRETE SYSTEMS, INC. This drawing is disclosed with the understanding that it will be retained in confidence and its use limited solely to the purpose for which it is disclosed. It is understood that no reproduction of this drawing is authorized without permission from CONCRETE SYSTEMS, INC. and that it will be returned to CONCRETE SYSTEMS, INC. upon request.

Rev.	Date	DESCRIPTION	By
10			
9			
8			
7			
6			
5			
4			
3			
2			
1			

REVISIONS

This drawing is based upon information provided from the following documents and/or sources:
Engineer: STANTEC CONSULTING SERVICES, INC.
Project No:
Drawings: PROJECT PLANS
Specifications:
Other Sources:

CSI Concrete Systems Inc.
9 Commercial St., Hudson, NH,03051
Phone 603-889-4163
Fax 603-889-2417

STATE AGENCY
VTrans Working to Get You There

Drawn By A KOSTENKO	Date 04/04/2016	
Reviewed By	Date	
Approved By	Date	

VTAOT PROJ. NO.: BRF 0151(21)

MILLER CONSTRUCTION, INC.
ROUTE 106 BRIDGE REPLACEMENT T.H. 61 (KENDALL ROAD)
WOODSTOCK, VT

D — Drawing No. SHOP DRAWING – F1 — REV 0
R-S22624-F1

Quantity: 1 | Project No: | SHEET F1 OF

NOTES:
1. ALL REINFORCING TO BE LEVEL I, BLACK (UNCOATED).
2. COVER TO REINFORCING: SEE DETAILS

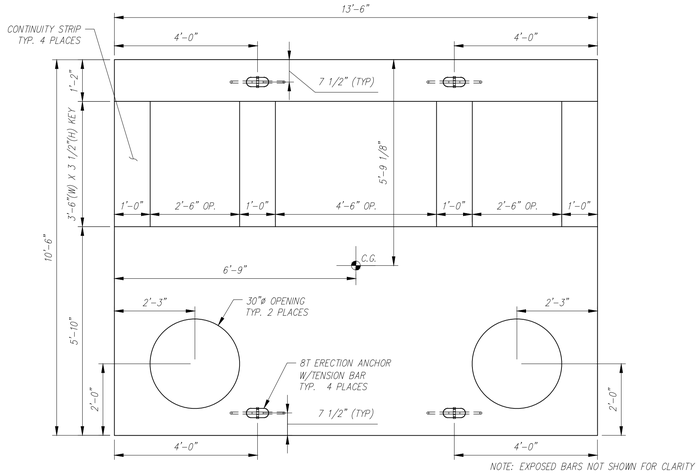

NOTE: EXPOSED BARS NOT SHOWN FOR CLARITY

PLAN VIEW
SCALE: 1/2" = 1'-0"

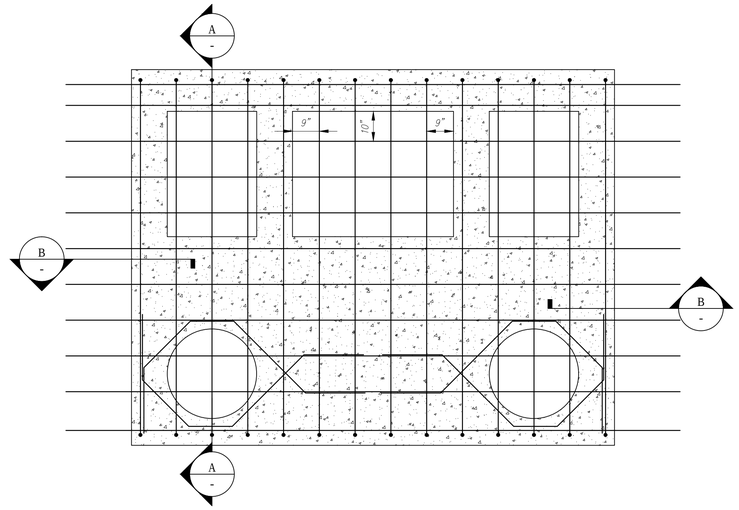

REINFORCING PLAN
SCALE: 1/2" = 1'-0"

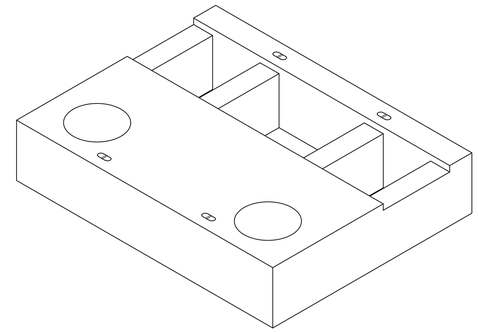

NOTE: EXPOSED BARS NOT SHOWN FOR CLARITY

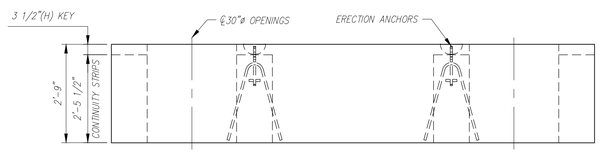

NOTE: EXPOSED BARS NOT SHOWN FOR CLARITY

FRONT ELEVATION
SCALE: 1/2" = 1'-0"

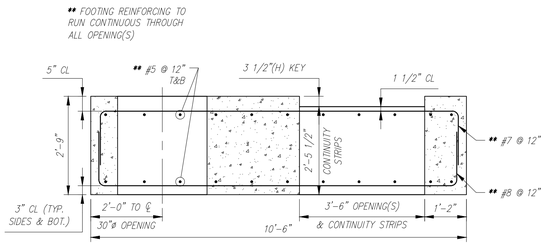

TYP. REINFORCING SECTION
SCALE: 1/2" = 1'-0"

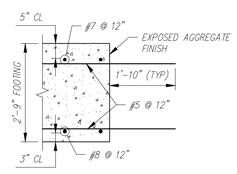

TYP. REINFORCING SECTION
SCALE: 1/2" = 1'-0"

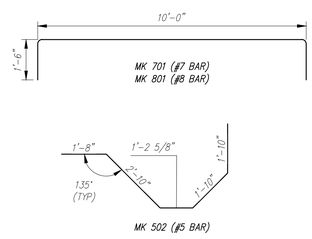

BENDING SCHEDULE
SCALE: 3/8" = 1'-0"

PIECE QUANTITY: 1 EACH
WEIGHT: 20.05 TONS

Contractor is to verify that all information shown on drawings has been thoroughly checked, complies with the contract documents and is adequate to meet the field conditions. Some dimensions and details may differ slightly from contract drawings to accommodate the manufacturing or design process. Approval of this drawing indicates that any deviation from the contract documents has been reviewed and found to be acceptable. Production will not commence until receipt of signed, approved shop drawings.

This drawing contains information proprietary to CONCRETE SYSTEMS, INC. This drawing is disclosed with the understanding that it will be retained in confidence and its use limited solely to the purpose for which it is disclosed. It is understood that no reproduction of this drawing is authorized without permission from CONCRETE SYSTEMS, INC. and that it will be returned to CONCRETE SYSTEMS, INC. upon request.

Rev.	Date	DESCRIPTION	By
10			
9			
8			
7			
6			
5			
4			
3			
2			
1			

REVISIONS

This drawing is based upon information provided from the following documents and/or sources:
Engineer: STANTEC CONSULTING SERVICES, INC.
Project No:
Drawings: PROJECT PLANS
Specifications:
Other Sources:

CSI Concrete Systems Inc.
9 Commercial St., Hudson, NH,03051
Phone 603-889-4163
Fax 603-889-2417

STATE AGENCY
VTrans Working to Get You There

Drawn By A KOSTENKO	Date 04/04/2016
Reviewed By	Date
Approved By	Date

VTAOT PROJ. NO.: BRF 0151(21)

MILLER CONSTRUCTION, INC.
ROUTE 106 BRIDGE REPLACEMENT T.H. 61 (KENDALL ROAD)
WOODSTOCK, VT

D | Drawing No. SHOP DRAWING – F2 | REV 0
R-S22624-F2

Quantity: 1 | Project No: | SHEET F2 OF

NOTES:
1. ALL REINFORCING TO BE LEVEL I, BLACK (UNCOATED).
2. COVER TO REINFORCING: SEE DETAILS

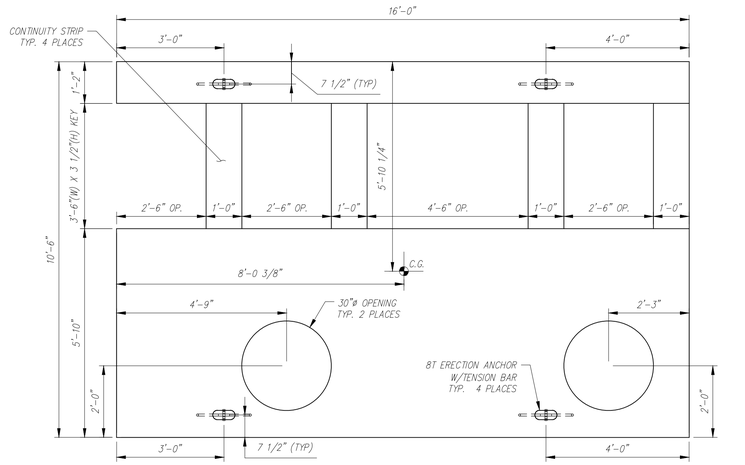

NOTE: EXPOSED BARS NOT SHOWN FOR CLARITY

PLAN VIEW
SCALE: 1/2" = 1'-0"

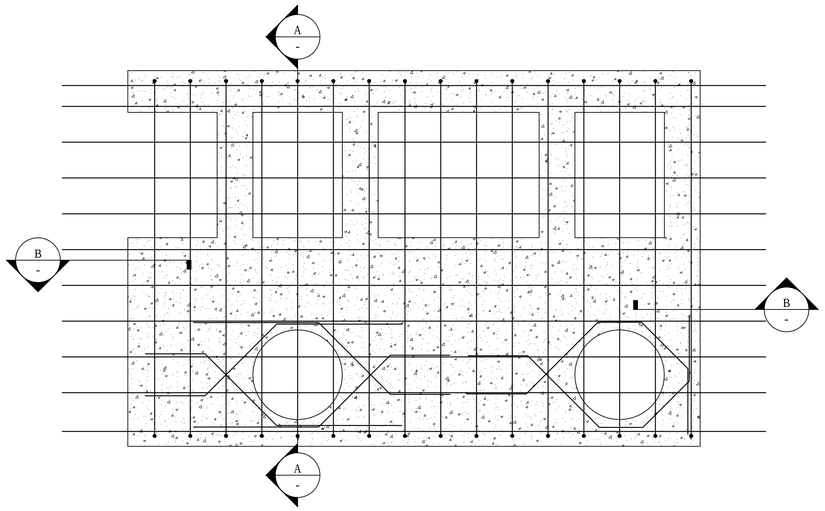

REINFORCING PLAN
SCALE: 1/2" = 1'-0"

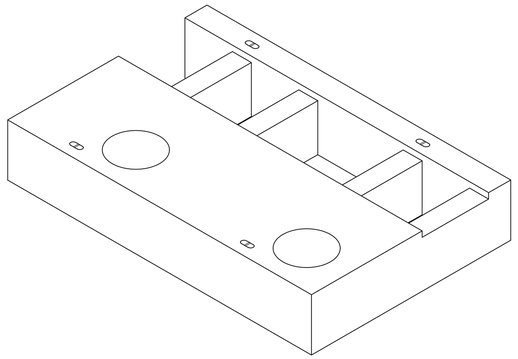

NOTE: EXPOSED BARS NOT SHOWN FOR CLARITY

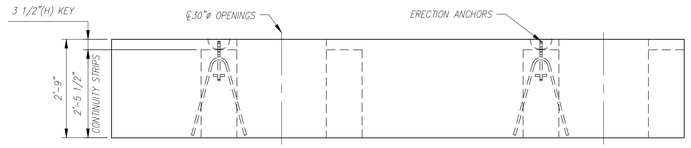

NOTE: EXPOSED BARS NOT SHOWN FOR CLARITY

FRONT ELEVATION
SCALE: 1/2" = 1'-0"

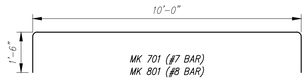

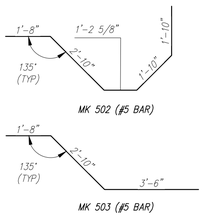

BENDING SCHEDULE
SCALE: 3/8" = 1'-0"

** FOOTING REINFORCING TO RUN CONTINUOUS THROUGH ALL OPENING(S)

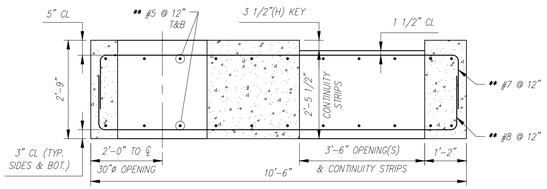

TYP. REINFORCING SECTION
SCALE: 1/2" = 1'-0"

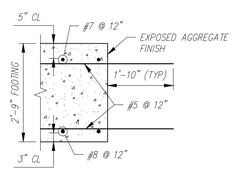

TYP. REINFORCING SECTION
SCALE: 1/2" = 1'-0"

PIECE QUANTITY: 1 EACH
WEIGHT: 23.66 TONS

Contractor is to verify that all information shown on drawings has been thoroughly checked, complies with the contract documents and is adequate to meet the field conditions. Some dimensions and details may differ slightly from contract drawings to accommodate the manufacturing or design process. Approval of this drawing indicates that any deviation from the contract documents has been reviewed and found to be acceptable. Production will not commence until receipt of signed, approved shop drawings.

This drawing contains information proprietary to CONCRETE SYSTEMS, INC. This drawing is disclosed with the understanding that it will be retained in confidence and its use limited solely to the purpose for which it is disclosed. It is understood that no reproduction of this drawing is authorized without permission from CONCRETE SYSTEMS, INC. and that it will be returned to CONCRETE SYSTEMS, INC. upon request.

Rev.	Date	DESCRIPTION	By
10			
9			
8			
7			
6			
5			
4			
3			
2			
1			

REVISIONS

This drawing is based upon information provided from the following documents and/or sources:
Engineer: STANTEC CONSULTING SERVICES, INC.
Project No:
Drawings: PROJECT PLANS
Specifications:
Other Sources:

CSI Concrete Systems Inc.
9 Commercial St., Hudson, NH,03051
Phone 603-889-4163
Fax 603-889-2417

STATE AGENCY
VTrans Working to Get You There

Drawn By A KOSTENKO	Date 04/04/2016
Reviewed By	Date
Approved By	Date

VTAOT PROJ. NO.: BRF 0151(21)

MILLER CONSTRUCTION, INC.
ROUTE 106 BRIDGE REPLACEMENT T.H. 61 (KENDALL ROAD)
WOODSTOCK, VT

D — Drawing No. SHOP DRAWING – F3 — REV 0
R-S22624-F3

Quantity: 1 | Project No: | SHEET F3 OF

NOTES:
1. ALL REINFORCING TO BE LEVEL I, BLACK (UNCOATED).
2. COVER TO REINFORCING: SEE DETAILS

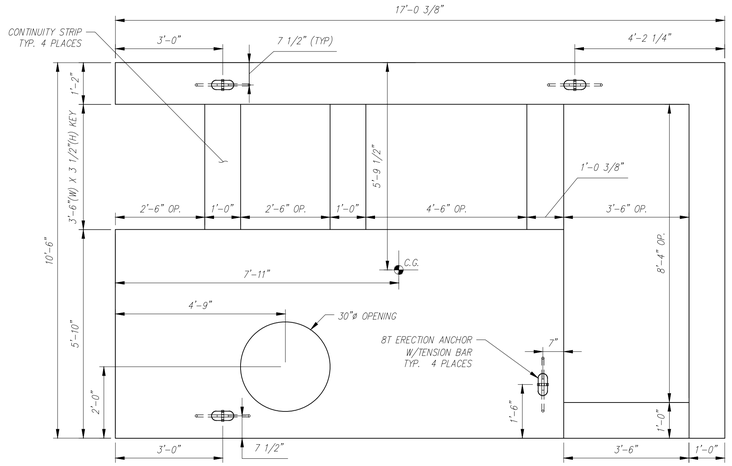

NOTE: EXPOSED BARS NOT SHOWN FOR CLARITY

PLAN VIEW
SCALE: 1/2" = 1'-0"

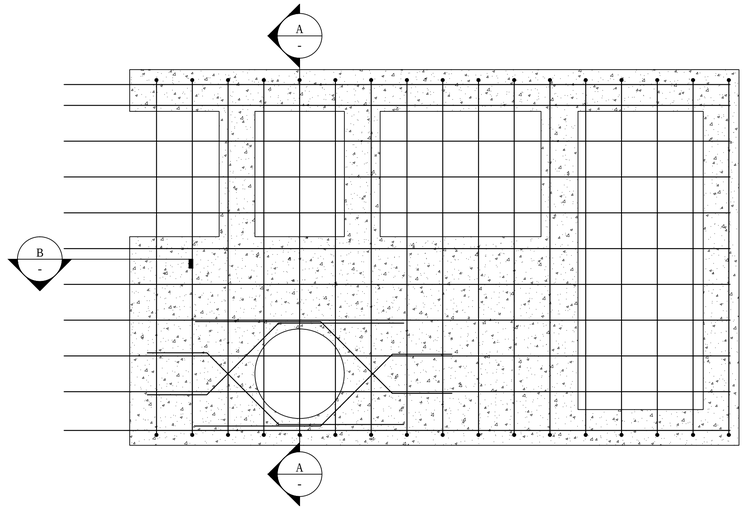

REINFORCING PLAN
SCALE: 1/2" = 1'-0"

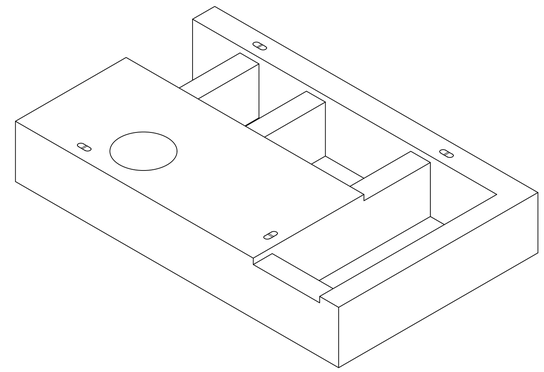

NOTE: EXPOSED BARS NOT SHOWN FOR CLARITY

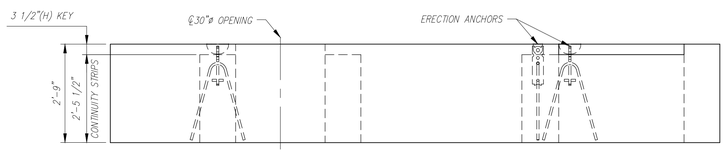

NOTE: EXPOSED BARS NOT SHOWN FOR CLARITY

FRONT ELEVATION
SCALE: 1/2" = 1'-0"

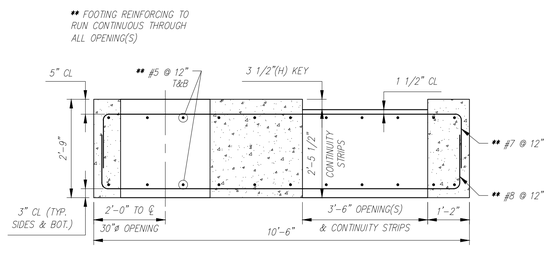

TYP. REINFORCING SECTION
SCALE: 1/2" = 1'-0"

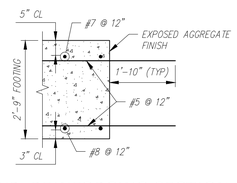

TYP. REINFORCING SECTION
SCALE: 1/2" = 1'-0"

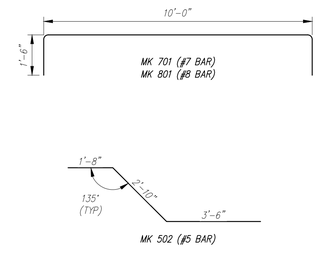

BENDING SCHEDULE
SCALE: 3/8" = 1'-0"

PIECE QUANTITY: 1 EACH
WEIGHT: 22.69 TONS

Contractor is to verify that all information shown on drawings has been thoroughly checked, complies with the contract documents and is adequate to meet the field conditions. Some dimensions and details may differ slightly from contract drawings to accommodate the manufacturing or design process. Approval of this drawing indicates that any deviation from the contract documents has been reviewed and found to be acceptable. Production will not commence until receipt of signed, approved shop drawings.

This drawing contains information proprietary to CONCRETE SYSTEMS, INC. This drawing is disclosed with the understanding that it will be retained in confidence and its use limited solely to the purpose for which it is disclosed. It is understood that no reproduction of this drawing is authorized without permission from CONCRETE SYSTEMS, INC. and that it will be returned to CONCRETE SYSTEMS, INC. upon request.

Rev.	Date	DESCRIPTION	By
10			
9			
8			
7			
6			
5			
4			
3			
2			
1			

REVISIONS

This drawing is based upon information provided from the following documents and/or sources:
Engineer: STANTEC CONSULTING SERVICES, INC.
Project No:
Drawings: PROJECT PLANS
Specifications:
Other Sources:

Concrete Systems Inc.
9 Commercial St., Hudson, NH,03051
Phone 603-889-4163
Fax 603-889-2417

STATE AGENCY
VTrans Working to Get You There

Drawn By: A KOSTENKO	Date: 04/04/2016	
Reviewed By	Date	
Approved By	Date	

VTAOT PROJ. NO.: BRF 0151(21)

MILLER CONSTRUCTION, INC.
ROUTE 106 BRIDGE REPLACEMENT T.H. 61 (KENDALL ROAD)
WOODSTOCK, VT

D | Drawing No. | SHOP DRAWING – F4 | REV 0
R-S22624-F4

Quantity: 1 | Project No: | SHEET F4 OF

NOTES:
1. ALL REINFORCING TO BE LEVEL I, BLACK (UNCOATED).
2. COVER TO REINFORCING: SEE DETAILS

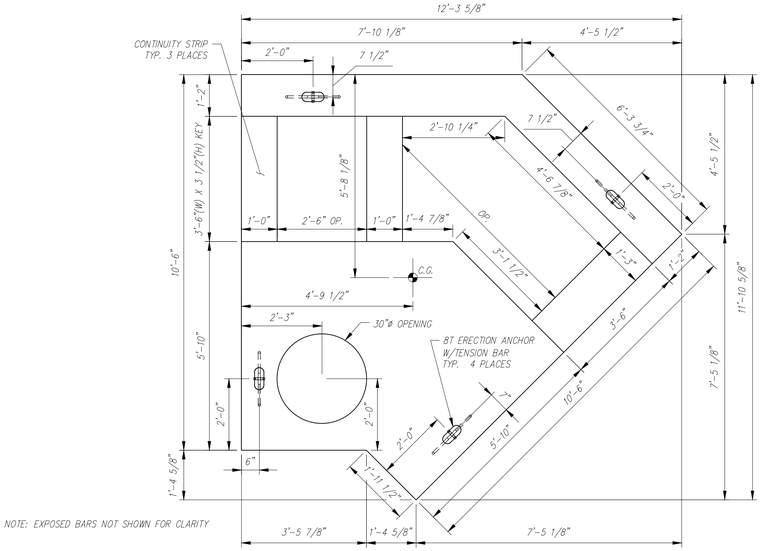

PLAN VIEW
SCALE: 1/2" = 1'-0"

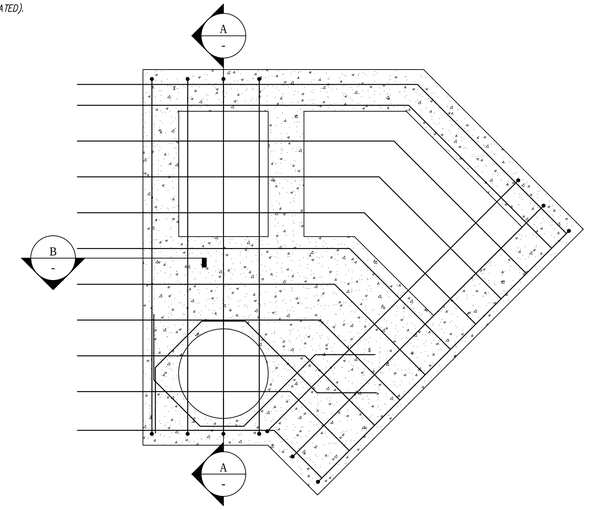

REINFORCING PLAN
SCALE: 1/2" = 1'-0"

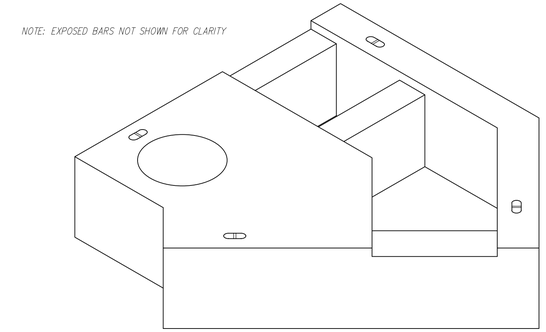

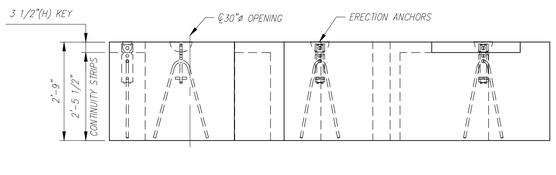

FRONT ELEVATION
SCALE: 1/2" = 1'-0"

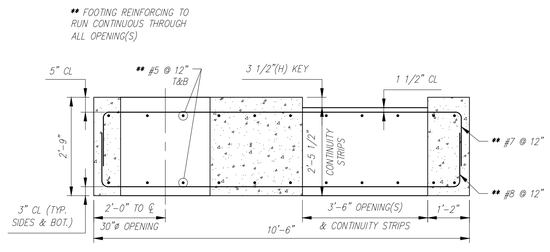

TYP. REINFORCING SECTION
SCALE: 1/2" = 1'-0"

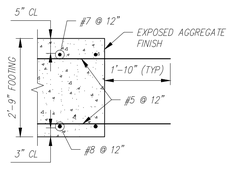

TYP. REINFORCING SECTION
SCALE: 1/2" = 1'-0"

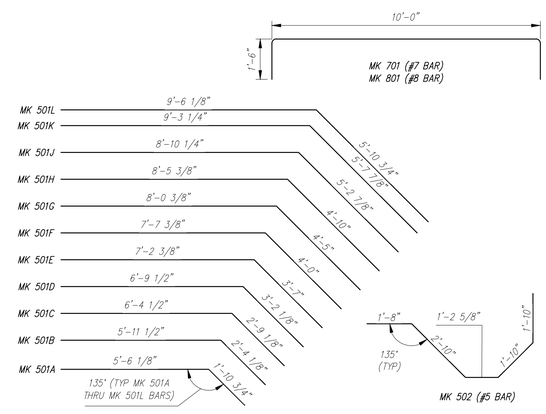

BENDING SCHEDULE
SCALE: 3/8" = 1'-0"

PIECE QUANTITY: 1 EACH
WEIGHT: 13.84 TONS

Contractor is to verify that all information shown on drawings has been thoroughly checked, complies with the contract documents and is adequate to meet the field conditions. Some dimensions and details may differ slightly from contract drawings to accommodate the manufacturing or design process. Approval of this drawing indicates that any deviation from the contract documents has been reviewed and found to be acceptable. Production will not commence until receipt of signed, approved shop drawings.

This drawing contains information proprietary to CONCRETE SYSTEMS, INC. This drawing is disclosed with the understanding that it will be retained in confidence and its use limited solely to the purpose for which it is disclosed. It is understood that no reproduction of this drawing is authorized without permission from CONCRETE SYSTEMS, INC. and that it will be returned to CONCRETE SYSTEMS, INC. upon request.

Rev.	Date	DESCRIPTION	By
10			
9			
8			
7			
6			
5			
4			
3			
2			
1			

REVISIONS

This drawing is based upon information provided from the following documents and/or sources:
Engineer: STANTEC CONSULTING SERVICES, INC.
Project No:
Drawings: PROJECT PLANS
Specifications:
Other Sources:

Concrete Systems Inc.
9 Commercial St., Hudson, NH,03051
Phone 603-889-4163
Fax 603-889-2417

STATE AGENCY
VTrans Working to Get You There

Drawn By A KOSTENKO	Date 04/04/2016
Reviewed By	Date
Approved By	Date

VTAOT PROJ. NO.: BRF 0151(21)

MILLER CONSTRUCTION, INC.
ROUTE 106 BRIDGE REPLACEMENT T.H. 61 (KENDALL ROAD)
WOODSTOCK, VT

D | Drawing No. SHOP DRAWING – F5 | REV 0
R-S22624-F5

Quantity: 1 | Project No: | SHEET F5 OF

NOTES:
1. ALL REINFORCING TO BE LEVEL I, BLACK (UNCOATED).
2. COVER TO REINFORCING: SEE DETAILS

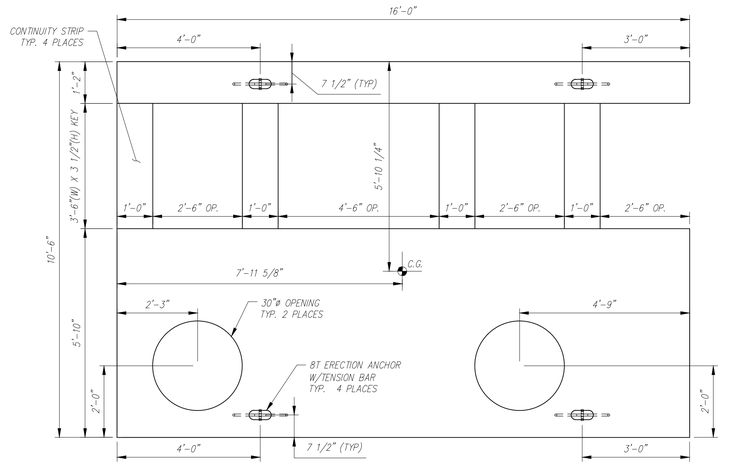

NOTE: EXPOSED BARS NOT SHOWN FOR CLARITY

PLAN VIEW
SCALE: 1/2" = 1'-0"

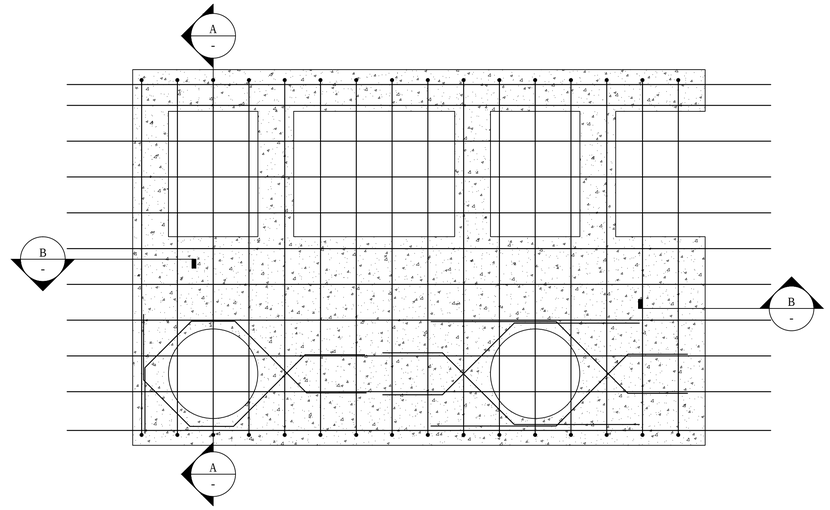

REINFORCING PLAN
SCALE: 1/2" = 1'-0"

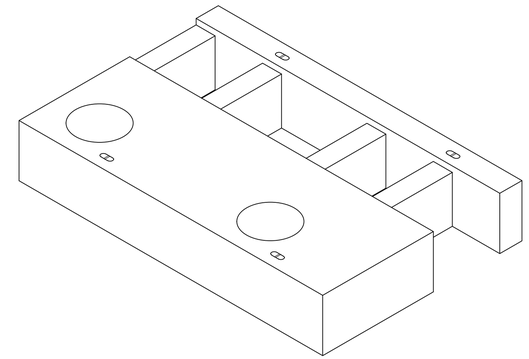

NOTE: EXPOSED BARS NOT SHOWN FOR CLARITY

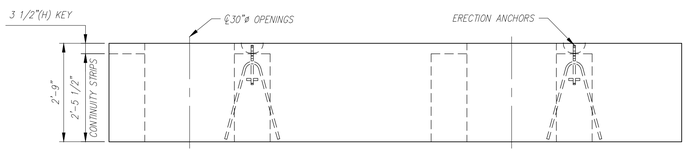

NOTE: EXPOSED BARS NOT SHOWN FOR CLARITY

FRONT ELEVATION
SCALE: 1/2" = 1'-0"

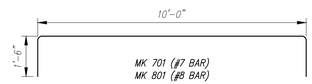

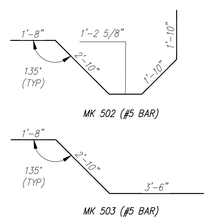

BENDING SCHEDULE
SCALE: 3/8" = 1'-0"

** FOOTING REINFORCING TO RUN CONTINUOUS THROUGH ALL OPENING(S)

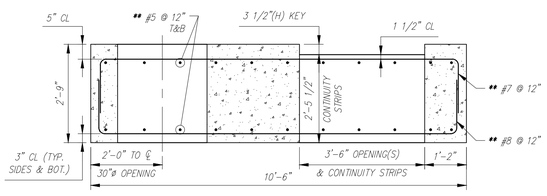

TYP. REINFORCING SECTION
SCALE: 1/2" = 1'-0"

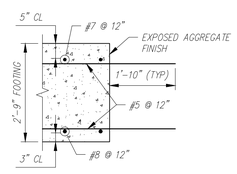

TYP. REINFORCING SECTION
SCALE: 1/2" = 1'-0"

PIECE QUANTITY: 1 EACH
WEIGHT: 23.66 TONS

Contractor is to verify that all information shown on drawings has been thoroughly checked, complies with the contract documents and is adequate to meet the field conditions. Some dimensions and details may differ slightly from contract drawings to accommodate the manufacturing or design process. Approval of this drawing indicates that any deviation from the contract documents has been reviewed and found to be acceptable. Production will not commence until receipt of signed, approved shop drawings.

This drawing contains information proprietary to CONCRETE SYSTEMS, INC. This drawing is disclosed with the understanding that it will be retained in confidence and its use limited solely to the purpose for which it is disclosed. It is understood that no reproduction of this drawing is authorized without permission from CONCRETE SYSTEMS, INC. and that it will be returned to CONCRETE SYSTEMS, INC. upon request.

Rev.	Date	DESCRIPTION	By
10			
9			
8			
7			
6			
5			
4			
3			
2			
1			

REVISIONS

This drawing is based upon information provided from the following documents and/or sources:
Engineer: STANTEC CONSULTING SERVICES, INC.
Project No:
Drawings: PROJECT PLANS
Specifications:
Other Sources:

CSI Concrete Systems Inc.
9 Commercial St., Hudson, NH,03051
Phone 603-889-4163
Fax 603-889-2417

STATE AGENCY
VTrans Working to Get You There

Drawn By A KOSTENKO	Date 04/04/2016
Reviewed By	Date
Approved By	Date

VTAOT PROJ. NO.: BRF 0151(21)

MILLER CONSTRUCTION, INC.
ROUTE 106 BRIDGE REPLACEMENT T.H. 61 (KENDALL ROAD)
WOODSTOCK, VT

D | Drawing No. SHOP DRAWING – F6 | REV 0
R-S22624-F6

Quantity: 1 | Project No: | SHEET F6 OF

NOTES:
1. ALL REINFORCING TO BE LEVEL I, BLACK (UNCOATED).
2. COVER TO REINFORCING: SEE DETAILS

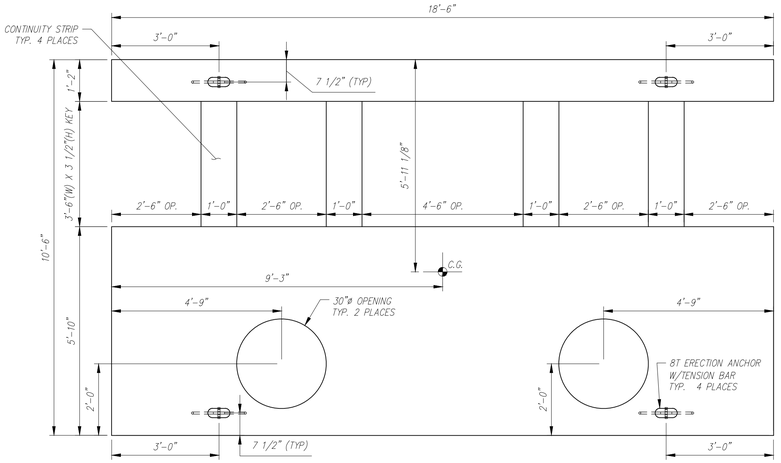

NOTE: EXPOSED BARS NOT SHOWN FOR CLARITY

PLAN VIEW
SCALE: 1/2" = 1'-0"

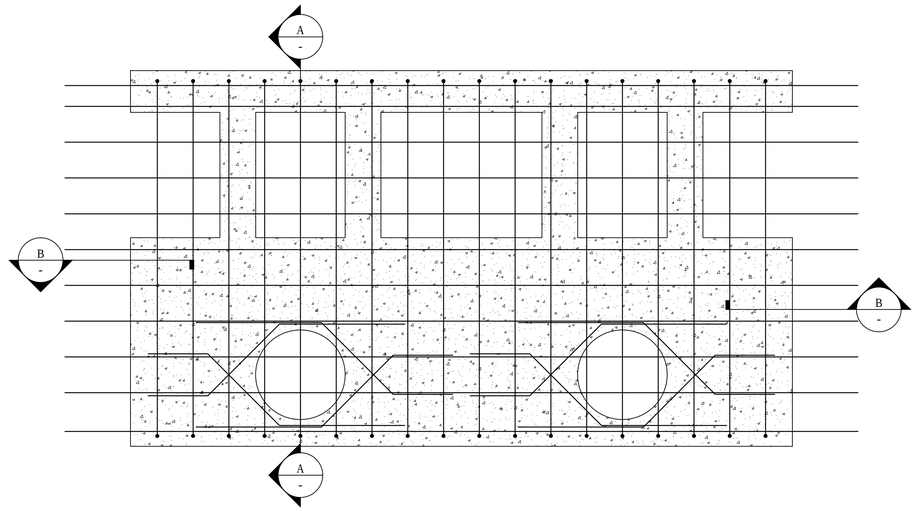

REINFORCING PLAN
SCALE: 1/2" = 1'-0"

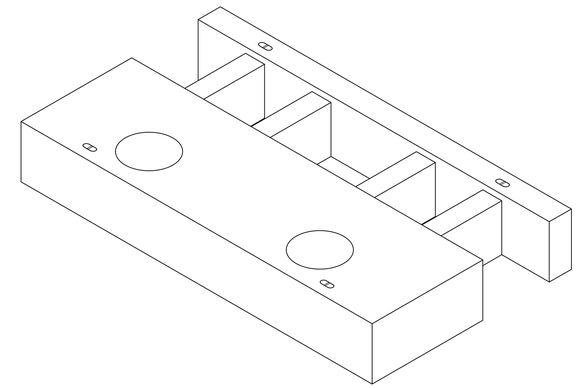

NOTE: EXPOSED BARS NOT SHOWN FOR CLARITY

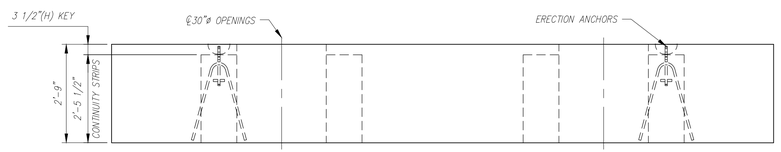

NOTE: EXPOSED BARS NOT SHOWN FOR CLARITY

FRONT ELEVATION
SCALE: 1/2" = 1'-0"

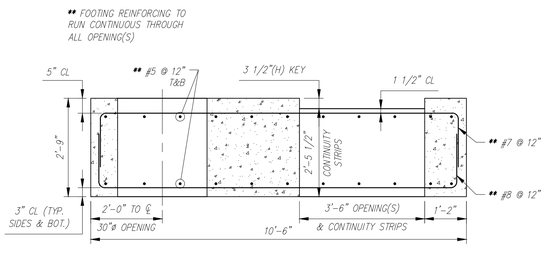

TYP. REINFORCING SECTION
SCALE: 1/2" = 1'-0"

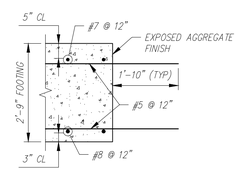

TYP. REINFORCING SECTION
SCALE: 1/2" = 1'-0"

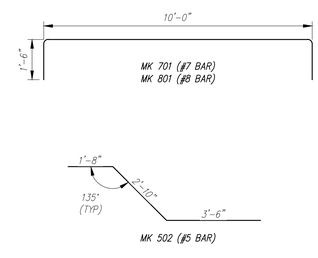

BENDING SCHEDULE
SCALE: 3/8" = 1'-0"

PIECE QUANTITY: 1 EACH
WEIGHT: 27.27 TONS

Contractor is to verify that all information shown on drawings has been thoroughly checked, complies with the contract documents and is adequate to meet the field conditions. Some dimensions and details may differ slightly from contract drawings to accommodate the manufacturing or design process. Approval of this drawing indicates that any deviation from the contract documents has been reviewed and found to be acceptable. Production will not commence until receipt of signed, approved shop drawings.

This drawing contains information proprietary to CONCRETE SYSTEMS, INC. This drawing is disclosed with the understanding that it will be retained in confidence and its use limited solely to the purpose for which it is disclosed. It is understood that no reproduction of this drawing is authorized without permission from CONCRETE SYSTEMS, INC. and that it will be returned to CONCRETE SYSTEMS, INC. upon request.

Rev.	Date	DESCRIPTION	By
10			
9			
8			
7			
6			
5			
4			
3			
2			
1			

REVISIONS

This drawing is based upon information provided from the following documents and/or sources:
Engineer: STANTEC CONSULTING SERVICES, INC.
Project No:
Drawings: PROJECT PLANS
Specifications:
Other Sources:

CSI Concrete Systems Inc.
9 Commercial St., Hudson, NH,03051
Phone 603-889-4163
Fax 603-889-2417

STATE AGENCY
VTrans Working to Get You There

Drawn By A KOSTENKO	Date 04/04/2016
Reviewed By	Date
Approved By	Date

VTAOT PROJ. NO.: BRF 0151(21)

MILLER CONSTRUCTION, INC.
ROUTE 106 BRIDGE REPLACEMENT T.H. 61 (KENDALL ROAD)
WOODSTOCK, VT

D — Drawing No. SHOP DRAWING – F7 — REV 0
R-S22624-F7

Quantity: 1 | Project No: | SHEET F7 OF

NOTES:
1. ALL REINFORCING TO BE LEVEL I, BLACK (UNCOATED).
2. COVER TO REINFORCING: SEE DETAILS

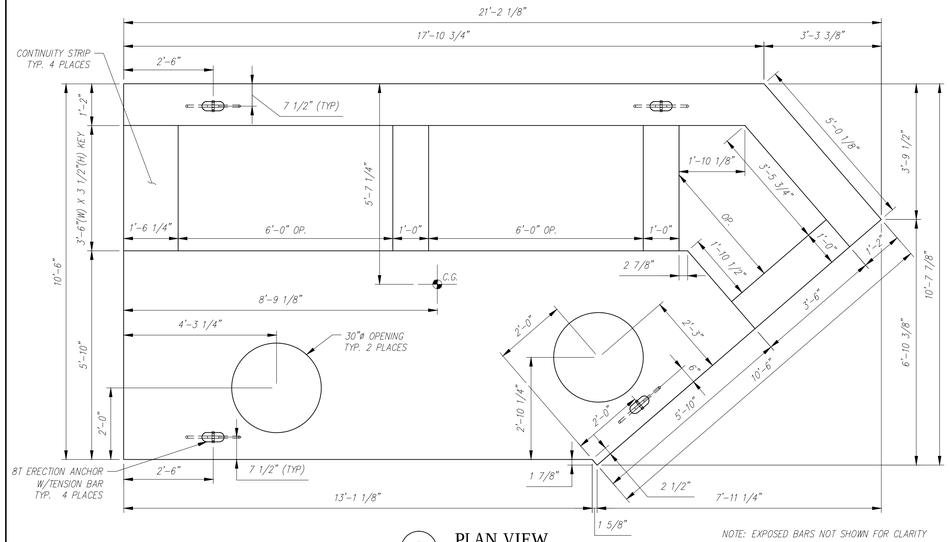

NOTE: EXPOSED BARS NOT SHOWN FOR CLARITY

PLAN VIEW
SCALE: 1/2" = 1'-0"

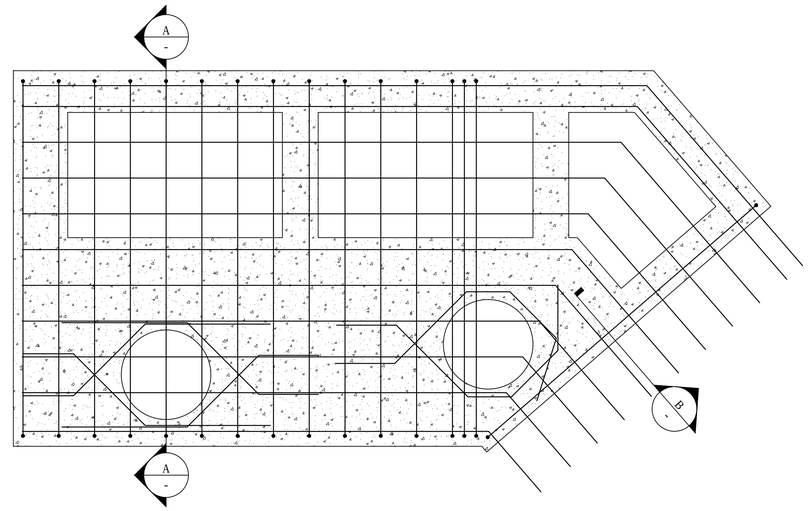

REINFORCING PLAN
SCALE: 1/2" = 1'-0"

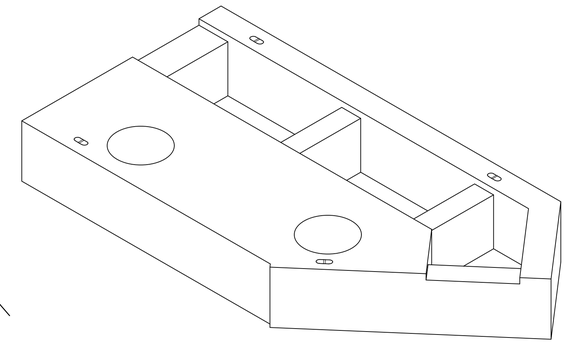

NOTE: EXPOSED BARS NOT SHOWN FOR CLARITY

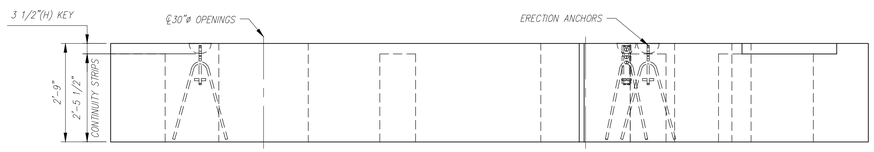

NOTE: EXPOSED BARS NOT SHOWN FOR CLARITY

FRONT ELEVATION
SCALE: 1/2" = 1'-0"

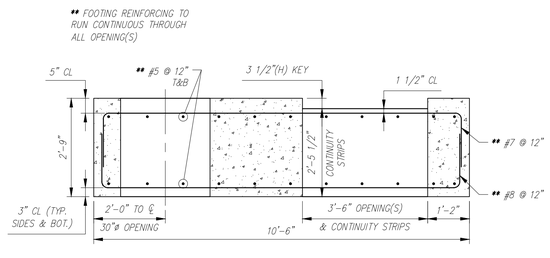

TYP. REINFORCING SECTION
SCALE: 1/2" = 1'-0"

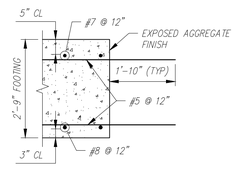

TYP. REINFORCING SECTION
SCALE: 1/2" = 1'-0"

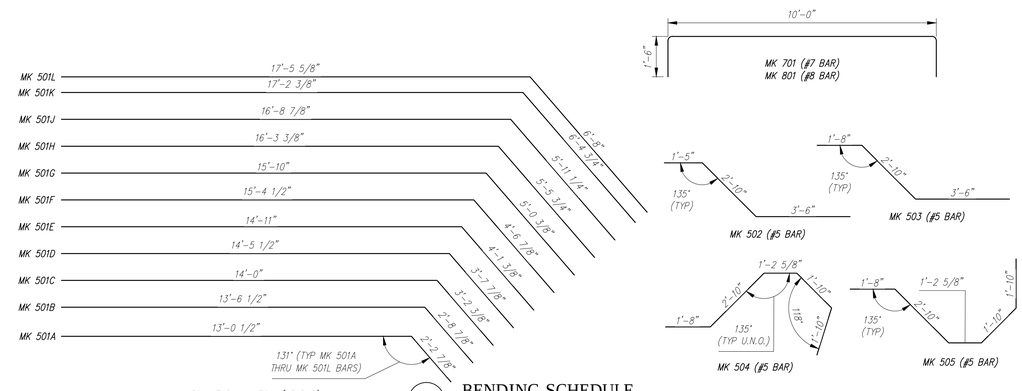

BENDING SCHEDULE
SCALE: 3/8" = 1'-0"

PIECE QUANTITY: 1 EACH
WEIGHT: 25.49 TONS

Contractor is to verify that all information shown on drawings has been thoroughly checked, complies with the contract documents and is adequate to meet the field conditions. Some dimensions and details may differ slightly from contract drawings to accommodate the manufacturing or design process. Approval of this drawing indicates that any deviation from the contract documents has been reviewed and found to be acceptable. Production will not commence until receipt of signed, approved shop drawings.

This drawing contains information proprietary to CONCRETE SYSTEMS, INC. This drawing is disclosed with the understanding that it will be retained in confidence and its use limited solely to the purpose for which it is disclosed. It is understood that no reproduction of this drawing is authorized without permission from CONCRETE SYSTEMS, INC. and that it will be returned to CONCRETE SYSTEMS, INC. upon request.

Rev.	Date	DESCRIPTION	By
10			
9			
8			
7			
6			
5			
4			
3			
2			
1			

REVISIONS

This drawing is based upon information provided from the following documents and/or sources:
Engineer: STANTEC CONSULTING SERVICES, INC.
Project No:
Drawings: PROJECT PLANS
Specifications:
Other Sources:

CSI Concrete Systems Inc.
9 Commercial St., Hudson, NH,03051
Phone 603-889-4163
Fax 603-889-2417

STATE AGENCY
VTrans Working to Get You There

Drawn By	A KOSTENKO	Date	04/04/2016
Reviewed By		Date	
Approved By		Date	

VTAOT PROJ. NO.: BRF 0151(21)

MILLER CONSTRUCTION, INC.
ROUTE 106 BRIDGE REPLACEMENT T.H. 61 (KENDALL ROAD)
WOODSTOCK, VT

D | Drawing No. SHOP DRAWING – F8 | REV 0
R-S22624-F8

Quantity: 1 | Project No: | SHEET F8 OF

NOTES:
1. ALL REINFORCING TO BE LEVEL I, BLACK (UNCOATED).
2. COVER TO REINFORCING: SEE DETAILS

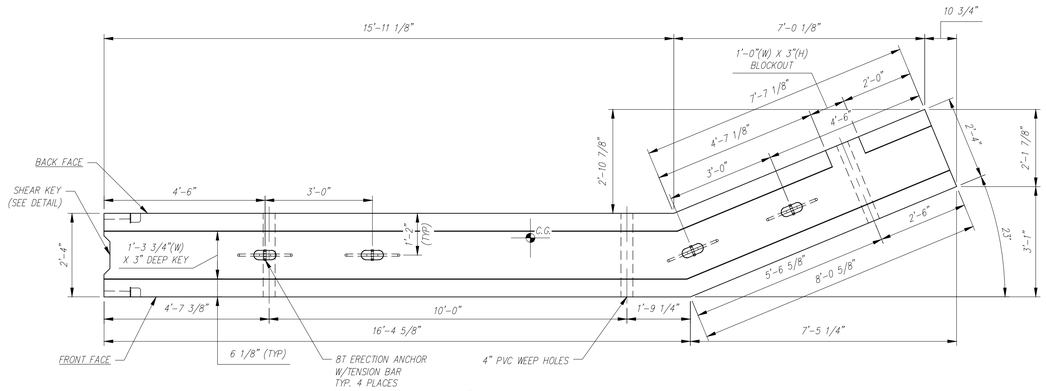

PLAN VIEW
SCALE: 1/2" = 1'-0"

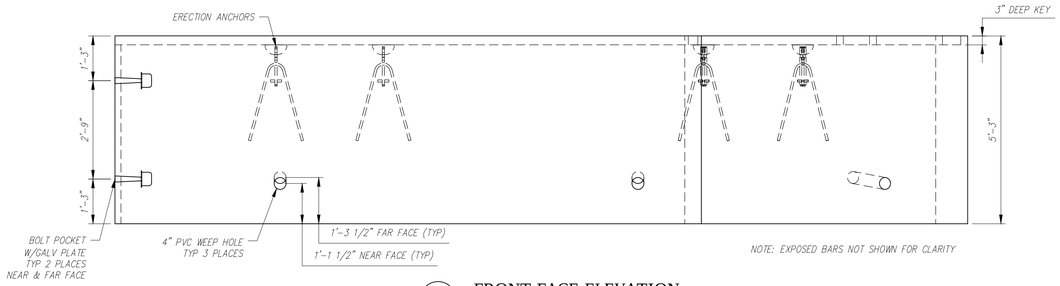

FRONT FACE ELEVATION
SCALE: 1/2" = 1'-0"

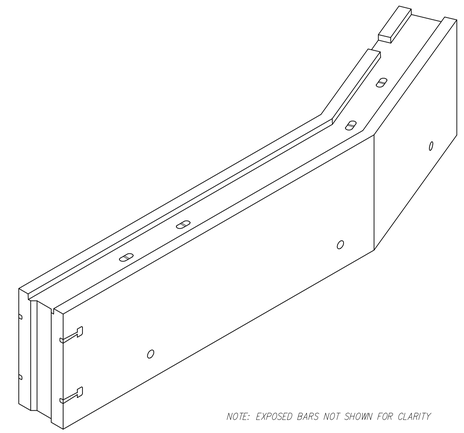

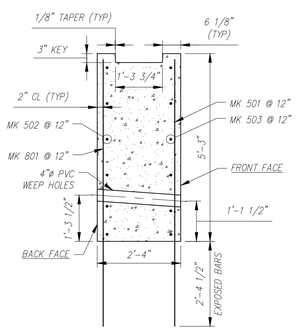

TYP. REINFORCING SECTION
SCALE: 1/2" = 1'-0"

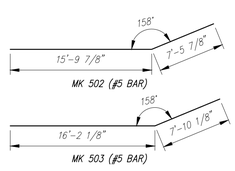

BENDING SCHEDULE
SCALE: 1/8" = 1'-0"

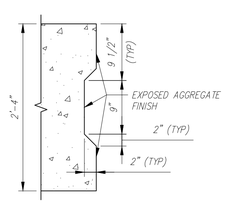

TYP. SHEAR KEY DETAIL (PLAN)
SCALE: 1" = 1'-0"

PIECE QUANTITY: 1 EACH
WEIGHT: 21.31 TONS

Contractor is to verify that all information shown on drawings has been thoroughly checked, complies with the contract documents and is adequate to meet the field conditions. Some dimensions and details may differ slightly from contract drawings to accommodate the manufacturing or design process. Approval of this drawing indicates that any deviation from the contract documents has been reviewed and found to be acceptable. Production will not commence until receipt of signed, approved shop drawings.

This drawing contains information proprietary to CONCRETE SYSTEMS, INC. This drawing is disclosed with the understanding that it will be retained in confidence and its use limited solely to the purpose for which it is disclosed. It is understood that no reproduction of this drawing is authorized without permission from CONCRETE SYSTEMS, INC. and that it will be returned to CONCRETE SYSTEMS, INC. upon request.

Rev.	Date	DESCRIPTION	By
10			
9			
8			
7			
6			
5			
4			
3			
2			
1			

REVISIONS

This drawing is based upon information provided from the following documents and/or sources:
Engineer: STANTEC CONSULTING SERVICES, INC.
Project No:
Drawings: PROJECT PLANS
Specifications:
Other Sources:

Concrete Systems Inc.
9 Commercial St., Hudson, NH,03051
Phone 603-889-4163
Fax 603-889-2417

STATE AGENCY
VTrans Working to Get You There

Drawn By A KOSTENKO	Date 04/04/2016
Reviewed By	Date
Approved By	Date

VTAOT PROJ. NO.: BRF 0151(21)

MILLER CONSTRUCTION, INC.
ROUTE 106 BRIDGE REPLACEMENT T.H. 61 (KENDALL ROAD)
WOODSTOCK, VT

D | SHOP DRAWING – P1 | REV 0
Drawing No. R-S22624-P1
Quantity: 1 | Project No: | SHEET P1 OF

NOTES:
1. ALL REINFORCING TO BE LEVEL I, BLACK (UNCOATED).
2. COVER TO REINFORCING: SEE DETAILS

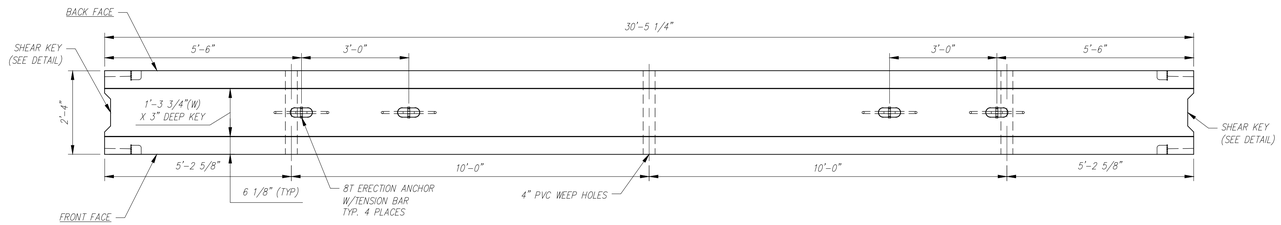

PLAN VIEW
SCALE: 1/2" = 1'-0"

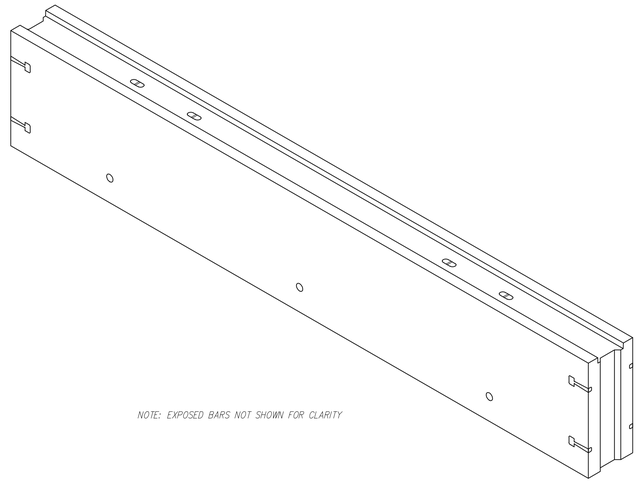

NOTE: EXPOSED BARS NOT SHOWN FOR CLARITY

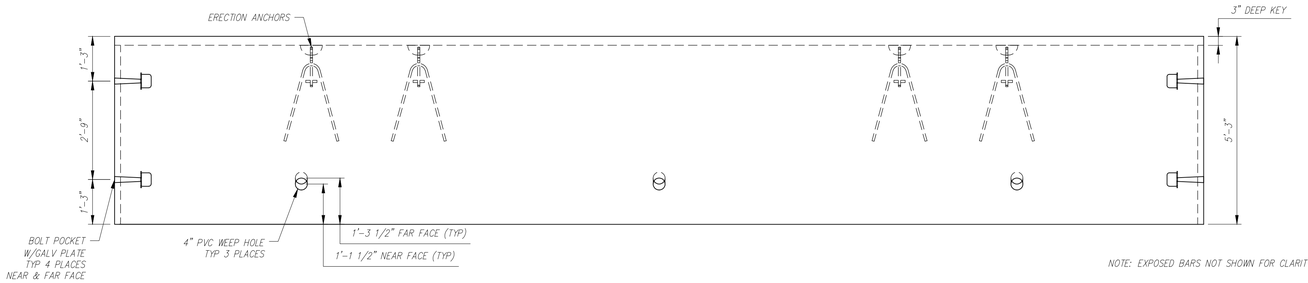

NOTE: EXPOSED BARS NOT SHOWN FOR CLARITY

FRONT FACE ELEVATION
SCALE: 1/2" = 1'-0"

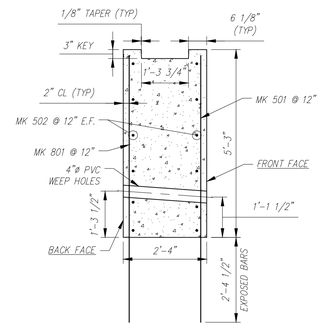

TYP. REINFORCING SECTION
SCALE: 1/2" = 1'-0"

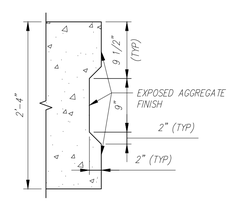

TYP. SHEAR KEY DETAIL (PLAN)
SCALE: 1" = 1'-0"

PIECE QUANTITY: 2 EACH
WEIGHT: 27.04 TONS

Contractor is to verify that all information shown on drawings has been thoroughly checked, complies with the contract documents and is adequate to meet the field conditions. Some dimensions and details may differ slightly from contract drawings to accommodate the manufacturing or design process. Approval of this drawing indicates that any deviation from the contract documents has been reviewed and found to be acceptable. Production will not commence until receipt of signed, approved shop drawings.

This drawing contains information proprietary to CONCRETE SYSTEMS, INC. This drawing is disclosed with the understanding that it will be retained in confidence and its use limited solely to the purpose for which it is disclosed. It is understood that no reproduction of this drawing is authorized without permission from CONCRETE SYSTEMS, INC. and that it will be returned to CONCRETE SYSTEMS, INC. upon request.

Rev.	Date	DESCRIPTION	By
10			
9			
8			
7			
6			
5			
4			
3			
2			
1			

REVISIONS

This drawing is based upon information provided from the following documents and/or sources:
Engineer: STANTEC CONSULTING SERVICES, INC.
Project No:
Drawings: PROJECT PLANS
Specifications:
Other Sources:

CSI Concrete Systems Inc.
9 Commercial St., Hudson, NH,03051
Phone 603-889-4163
Fax 603-889-2417

STATE AGENCY
VTrans Working to Get You There

Drawn By	A KOSTENKO	Date 04/04/2016
Reviewed By		Date
Approved By		Date

VTAOT PROJ. NO.: BRF 0151(21)

MILLER CONSTRUCTION, INC.
ROUTE 106 BRIDGE REPLACEMENT T.H. 61 (KENDALL ROAD)
WOODSTOCK, VT

D | Drawing No. SHOP DRAWING – P2 | REV 0
R-S22624-P2

Quantity: 1 | Project No: | SHEET P2 OF

NOTES:
1. ALL REINFORCING TO BE LEVEL I, BLACK (UNCOATED).
2. COVER TO REINFORCING: SEE DETAILS

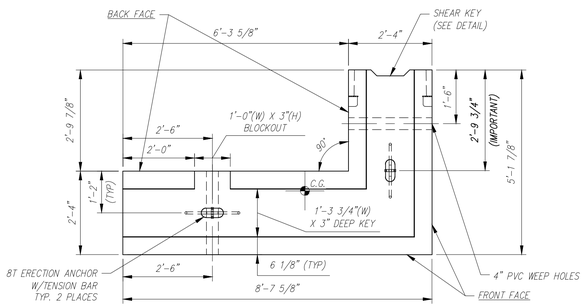

PLAN VIEW
SCALE: 1/2" = 1'-0"

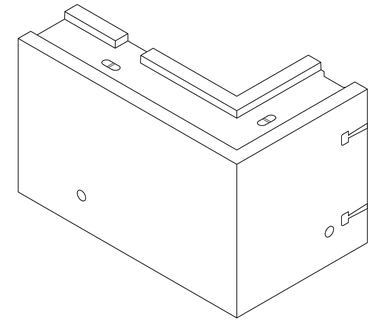

NOTE: EXPOSED BARS NOT SHOWN FOR CLARITY

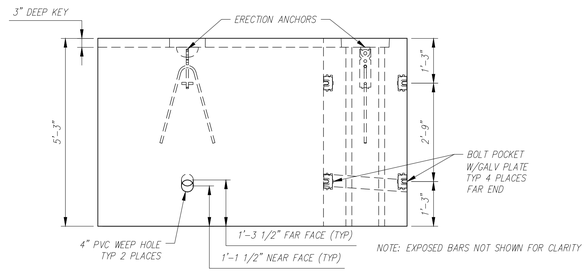

FRONT FACE ELEVATION
SCALE: 1/2" = 1'-0"

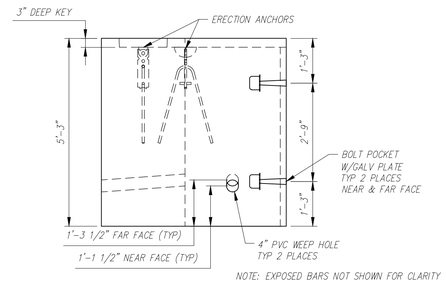

RIGHT SIDE ELEVATION
SCALE: 1/2" = 1'-0"

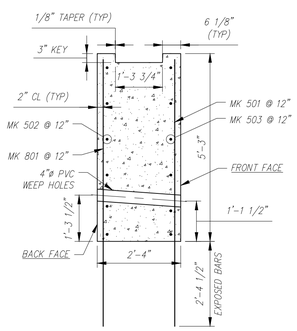

TYP. REINFORCING SECTION
SCALE: 1/2" = 1'-0"

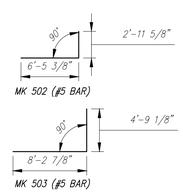

BENDING SCHEDULE
SCALE: 1/8" = 1'-0"

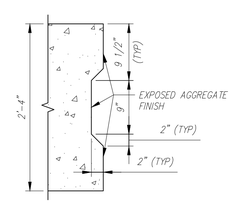

TYP. SHEAR KEY DETAIL (PLAN)
SCALE: 1" = 1'-0"

PIECE QUANTITY: 1 EACH
WEIGHT: 10.15 TONS

Contractor is to verify that all information shown on drawings has been thoroughly checked, complies with the contract documents and is adequate to meet the field conditions. Some dimensions and details may differ slightly from contract drawings to accommodate the manufacturing or design process. Approval of this drawing indicates that any deviation from the contract documents has been reviewed and found to be acceptable. Production will not commence until receipt of signed, approved shop drawings.

This drawing contains information proprietary to CONCRETE SYSTEMS, INC. This drawing is disclosed with the understanding that it will be retained in confidence and its use limited solely to the purpose for which it is disclosed. It is understood that no reproduction of this drawing is authorized without permission from CONCRETE SYSTEMS, INC. and that it will be returned to CONCRETE SYSTEMS, INC. upon request.

Rev.	Date	DESCRIPTION	By
10			
9			
8			
7			
6			
5			
4			
3			
2			
1			

REVISIONS

This drawing is based upon information provided from the following documents and/or sources:
Engineer: STANTEC CONSULTING SERVICES, INC.
Project No:
Drawings: PROJECT PLANS
Specifications:
Other Sources:

CSI Concrete Systems Inc.
9 Commercial St., Hudson, NH,03051
Phone 603-889-4163
Fax 603-889-2417

STATE AGENCY
VTrans Working to Get You There

Drawn By A KOSTENKO	Date 04/04/2016
Reviewed By	Date
Approved By	Date

VTAOT PROJ. NO.: BRF 0151(21)

MILLER CONSTRUCTION, INC.
ROUTE 106 BRIDGE REPLACEMENT T.H. 61 (KENDALL ROAD)
WOODSTOCK, VT

D | Drawing No. SHOP DRAWING – P3 | REV 0
R-S22624-P3

Quantity: 1 | Project No: | SHEET P3 OF

NOTES:
1. ALL REINFORCING TO BE LEVEL I, BLACK (UNCOATED).
2. COVER TO REINFORCING: SEE DETAILS

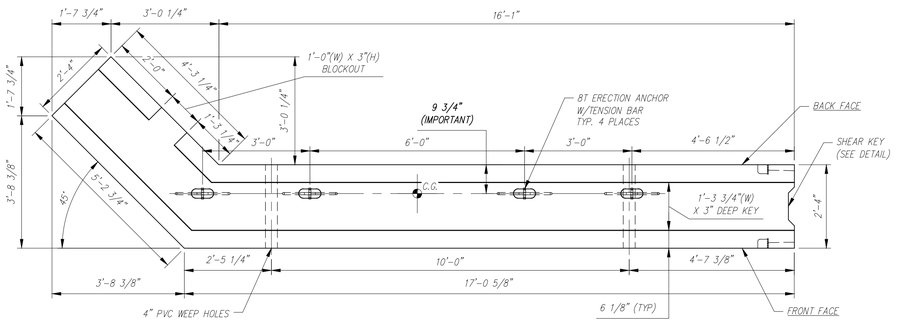

PLAN VIEW
SCALE: 1/2" = 1'-0"

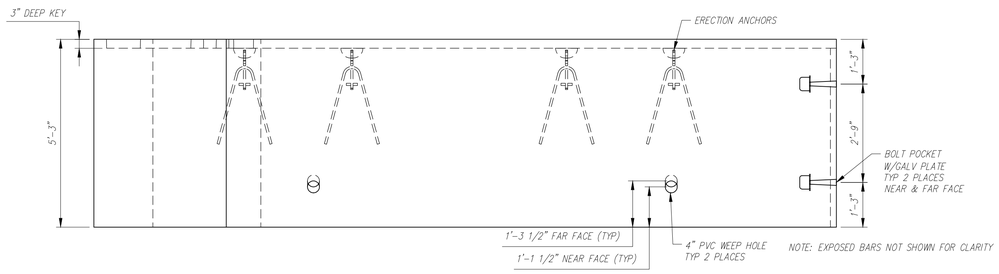

FRONT FACE ELEVATION
SCALE: 1/2" = 1'-0"

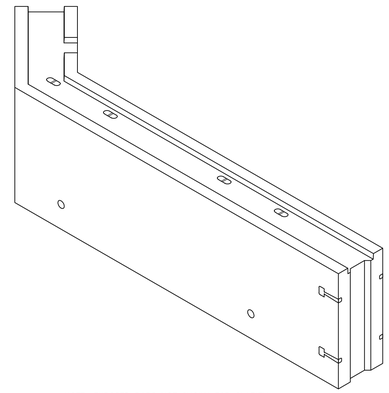

NOTE: EXPOSED BARS NOT SHOWN FOR CLARITY

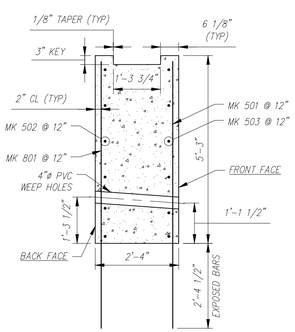

TYP. REINFORCING SECTION
SCALE: 1/2" = 1'-0"

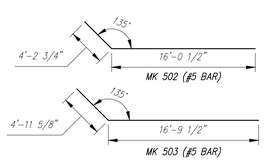

BENDING SCHEDULE
SCALE: 1/8" = 1'-0"

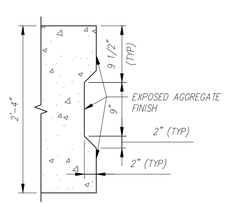

TYP. SHEAR KEY DETAIL (PLAN)
SCALE: 1" = 1'-0"

PIECE QUANTITY: 1 EACH
WEIGHT: 18.95 TONS

Contractor is to verify that all information shown on drawings has been thoroughly checked, complies with the contract documents and is adequate to meet the field conditions. Some dimensions and details may differ slightly from contract drawings to accommodate the manufacturing or design process. Approval of this drawing indicates that any deviation from the contract documents has been reviewed and found to be acceptable. Production will not commence until receipt of signed, approved shop drawings.

This drawing contains information proprietary to CONCRETE SYSTEMS, INC. This drawing is disclosed with the understanding that it will be retained in confidence and its use limited solely to the purpose for which it is disclosed. It is understood that no reproduction of this drawing is authorized without permission from CONCRETE SYSTEMS, INC. and that it will be returned to CONCRETE SYSTEMS, INC. upon request.

Rev.	Date	DESCRIPTION	By
10			
9			
8			
7			
6			
5			
4			
3			
2			
1			

REVISIONS

This drawing is based upon information provided from the following documents and/or sources:
Engineer: STANTEC CONSULTING SERVICES, INC.
Project No:
Drawings: PROJECT PLANS
Specifications:
Other Sources:

Concrete Systems Inc.
9 Commercial St., Hudson, NH,03051
Phone 603-889-4163
Fax 603-889-2417

STATE AGENCY
VTrans Working to Get You There
VERMONT AGENCY OF TRANSPORTATION

Drawn By A KOSTENKO	Date 04/04/2016
Reviewed By	Date
Approved By	Date

VTAOT PROJ. NO.: BRF 0151(21)

MILLER CONSTRUCTION, INC.
ROUTE 106 BRIDGE REPLACEMENT T.H. 61 (KENDALL ROAD)
WOODSTOCK, VT

D — SHOP DRAWING – P4 — REV 0
Drawing No. R-S22624-P4
Quantity: 1 | Project No: | SHEET P4 OF

NOTES:
1. ALL REINFORCING TO BE LEVEL I, BLACK (UNCOATED).
2. COVER TO REINFORCING: SEE DETAILS

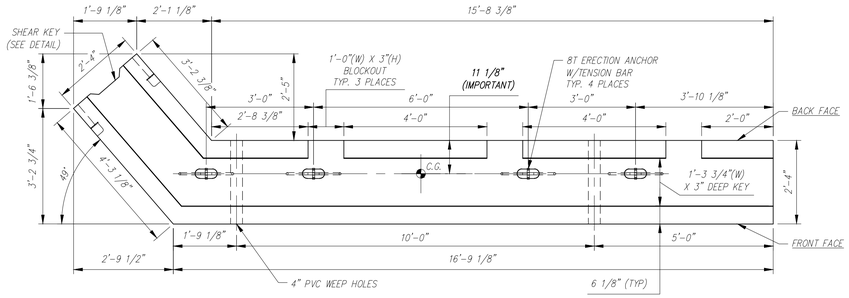

PLAN VIEW
SCALE: 1/2" = 1'-0"

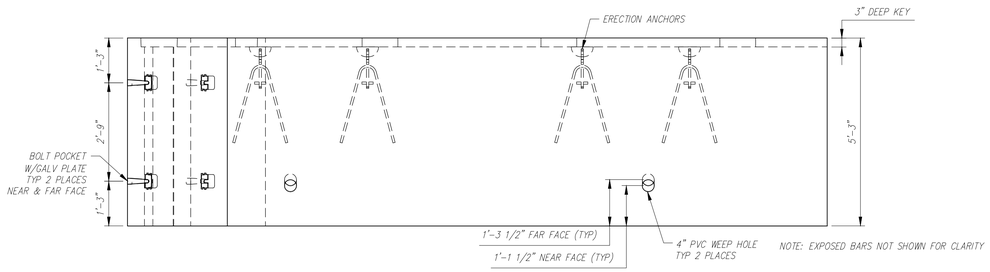

FRONT FACE ELEVATION
SCALE: 1/2" = 1'-0"

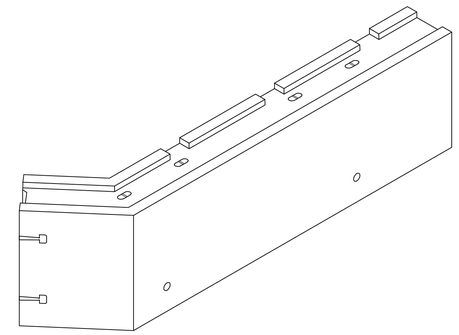

NOTE: EXPOSED BARS NOT SHOWN FOR CLARITY

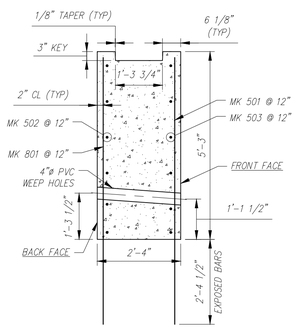

TYP. REINFORCING SECTION
SCALE: 1/2" = 1'-0"

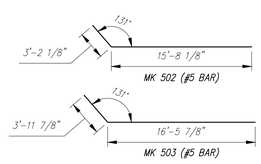

BENDING SCHEDULE
SCALE: 1/8" = 1'-0"

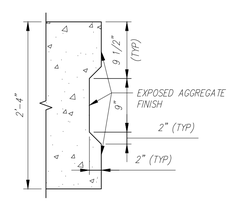

TYP. SHEAR KEY DETAIL (PLAN)
SCALE: 1" = 1'-0"

PIECE QUANTITY: 1 EACH
WEIGHT: 17.72 TONS

Contractor is to verify that all information shown on drawings has been thoroughly checked, complies with the contract documents and is adequate to meet the field conditions. Some dimensions and details may differ slightly from contract drawings to accommodate the manufacturing or design process. Approval of this drawing indicates that any deviation from the contract documents has been reviewed and found to be acceptable. Production will not commence until receipt of signed, approved shop drawings.

This drawing contains information proprietary to CONCRETE SYSTEMS, INC. This drawing is disclosed with the understanding that it will be retained in confidence and its use limited solely to the purpose for which it is disclosed. It is understood that no reproduction of this drawing is authorized without permission from CONCRETE SYSTEMS, INC. and that it will be returned to CONCRETE SYSTEMS, INC. upon request.

Rev.	Date	DESCRIPTION	By
10			
9			
8			
7			
6			
5			
4			
3			
2			
1			

REVISIONS

This drawing is based upon information provided from the following documents and/or sources:
Engineer: STANTEC CONSULTING SERVICES, INC.
Project No:
Drawings: PROJECT PLANS
Specifications:
Other Sources:

CSI
Concrete Systems Inc.
9 Commercial St., Hudson, NH,03051
Phone 603-889-4163
Fax 603-889-2417

STATE AGENCY
VTrans Working to Get You There

Drawn By A KOSTENKO	Date 04/04/2016
Reviewed By	Date
Approved By	Date

VTAOT PROJ. NO.: BRF 0151(21)

MILLER CONSTRUCTION, INC.
ROUTE 106 BRIDGE REPLACEMENT T.H. 61 (KENDALL ROAD)
WOODSTOCK, VT

D | Drawing No. SHOP DRAWING – P5 | REV 0
R-S22624-P5

Quantity: 1 | Project No: | SHEET P5 OF

NOTES:
1. ALL REINFORCING TO BE LEVEL I, EPOXY COATED.
2. COVER TO REINFORCING: SEE DETAILS

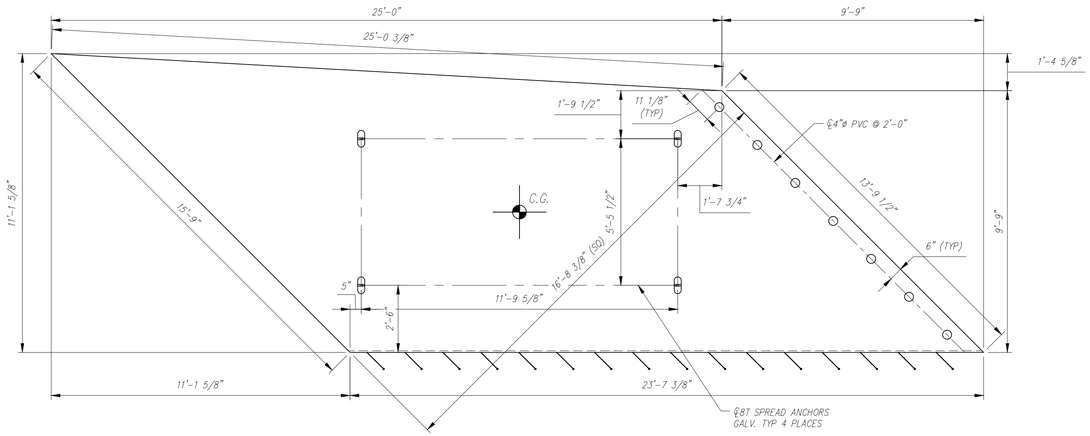

PLAN VIEW
SCALE: 3/8" = 1'-0"

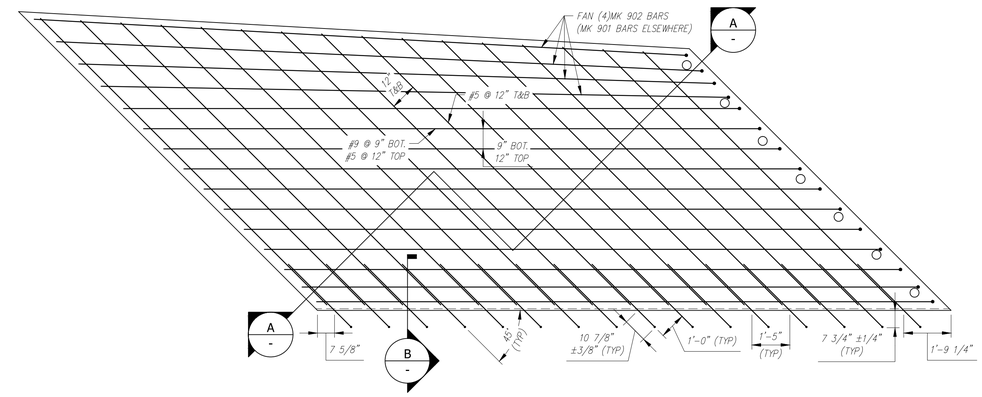

REINFORCING PLAN
SCALE: 3/8" = 1'-0"

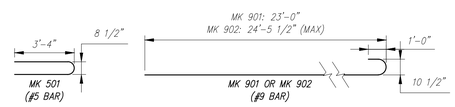

BENDING SCHEDULE
SCALE: 1/4" = 1'-0"

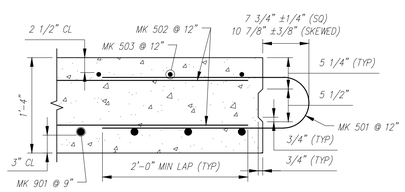

SECTION
SCALE: 1" = 1'-0"

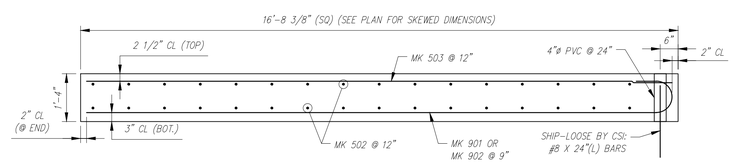

TYPICAL REINFORCING SECTION
SCALE: 1/2" = 1'-0"

PIECE QUANTITY: 1 EACH
WEIGHT: 24.67 TONS

Contractor is to verify that all information shown on drawings has been thoroughly checked, complies with the contract documents and is adequate to meet the field conditions. Some dimensions and details may differ slightly from contract drawings to accommodate the manufacturing or design process. Approval of this drawing indicates that any deviation from the contract documents has been reviewed and found to be acceptable. Production will not commence until receipt of signed, approved shop drawings.

This drawing contains information proprietary to CONCRETE SYSTEMS, INC. This drawing is disclosed with the understanding that it will be retained in confidence and its use limited solely to the purpose for which it is disclosed. It is understood that no reproduction of this drawing is authorized without permission from CONCRETE SYSTEMS, INC. and that it will be returned to CONCRETE SYSTEMS, INC. upon request.

Rev.	Date	DESCRIPTION	By
10			
9			
8			
7			
6			
5			
4			
3			
2			
1			

REVISIONS

This drawing is based upon information provided from the following documents and/or sources:
Engineer: STANTEC CONSULTING SERVICES, INC.
Project No:
Drawings: PROJECT PLANS
Specifications:
Other Sources:

CSI
Concrete Systems Inc.
9 Commercial St., Hudson, NH,03051
Phone 603-889-4163
Fax 603-889-2417

STATE AGENCY
VTrans Working to Get You There

Drawn By A KOSTENKO	Date 04/04/2016
Reviewed By	Date
Approved By	Date

VTAOT PROJ. NO.: BRF 0151(21)

MILLER CONSTRUCTION, INC.
ROUTE 106 BRIDGE REPLACEMENT T.H. 61 (KENDALL ROAD)
WOODSTOCK, VT

D | Drawing No. SHOP DRAWING – AS1 | REV 0
R-S22624-AS1

Quantity: | Project No: | SHEET AS1 OF

NOTES:
1. ALL REINFORCING TO BE LEVEL I, EPOXY COATED.
2. COVER TO REINFORCING: SEE DETAILS

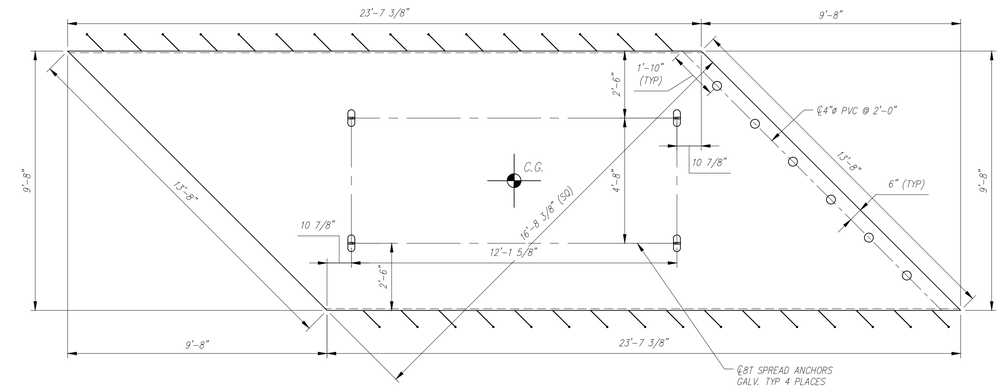

PLAN VIEW
SCALE: 3/8" = 1'-0"

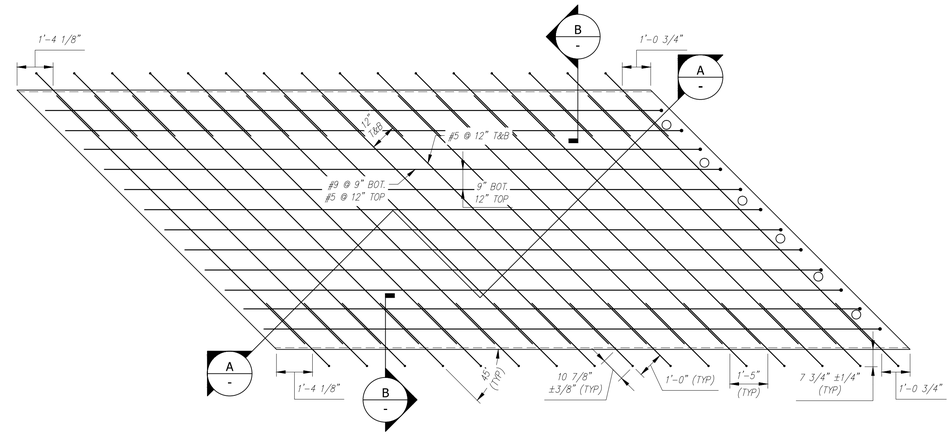

REINFORCING PLAN
SCALE: 3/8" = 1'-0"

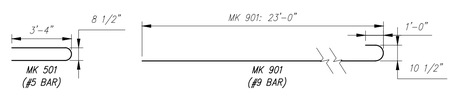

BENDING SCHEDULE
SCALE: 1/4" = 1'-0"

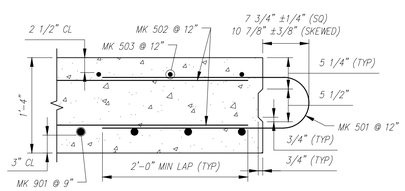

SECTION
SCALE: 1" = 1'-0"

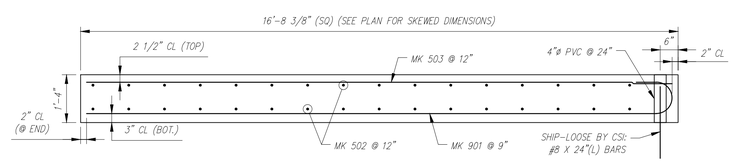

TYPICAL REINFORCING SECTION
SCALE: 1/2" = 1'-0"

PIECE QUANTITY: 1 EACH
WEIGHT: 22.83 TONS

Contractor is to verify that all information shown on drawings has been thoroughly checked, complies with the contract documents and is adequate to meet the field conditions. Some dimensions and details may differ slightly from contract drawings to accommodate the manufacturing or design process. Approval of this drawing indicates that any deviation from the contract documents has been reviewed and found to be acceptable. Production will not commence until receipt of signed, approved shop drawings.

This drawing contains information proprietary to CONCRETE SYSTEMS, INC. This drawing is disclosed with the understanding that it will be retained in confidence and its use limited solely to the purpose for which it is disclosed. It is understood that no reproduction of this drawing is authorized without permission from CONCRETE SYSTEMS, INC. and that it will be returned to CONCRETE SYSTEMS, INC. upon request.

Rev.	Date	DESCRIPTION	By
10			
9			
8			
7			
6			
5			
4			
3			
2			
1			

REVISIONS

This drawing is based upon information provided from the following documents and/or sources:
Engineer: STANTEC CONSULTING SERVICES, INC.
Project No:
Drawings: PROJECT PLANS
Specifications:
Other Sources:

CSI
Concrete Systems Inc.
9 Commercial St., Hudson, NH,03051
Phone 603-889-4163
Fax 603-889-2417

STATE AGENCY
VTrans Working to Get You There

Drawn By A KOSTENKO	Date 04/04/2016
Reviewed By	Date
Approved By	Date

VTAOT PROJ. NO.: BRF 0151(21)

MILLER CONSTRUCTION, INC.
ROUTE 106 BRIDGE REPLACEMENT T.H. 61 (KENDALL ROAD)
WOODSTOCK, VT

D | Drawing No. SHOP DRAWING – AS2 | REV 0
R-S22624-AS2

Quantity: | Project No: | SHEET AS2 OF

NOTES:
1. ALL REINFORCING TO BE LEVEL I, EPOXY COATED.
2. COVER TO REINFORCING: SEE DETAILS

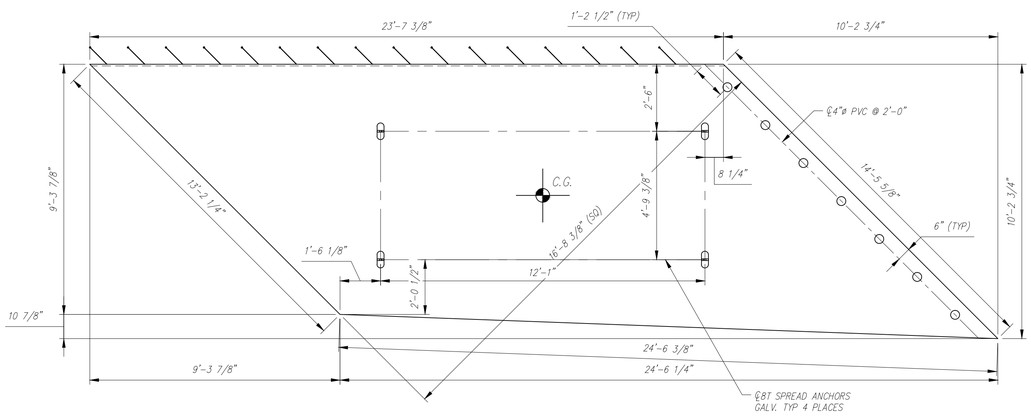

PLAN VIEW
SCALE: 3/8" = 1'-0"

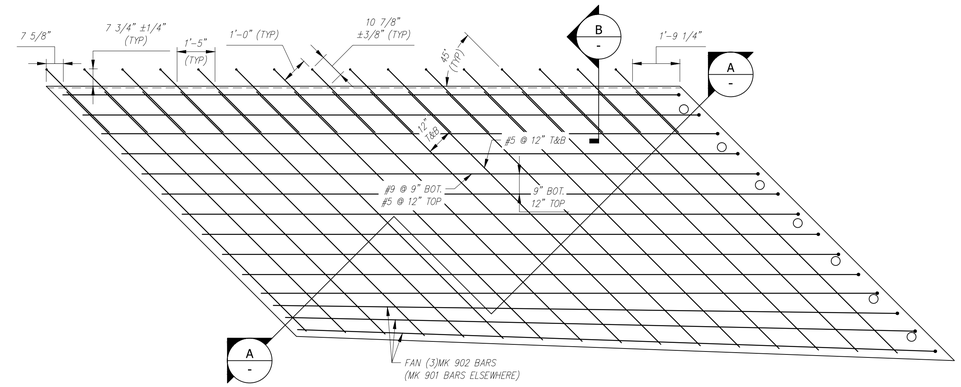

REINFORCING PLAN
SCALE: 3/8" = 1'-0"

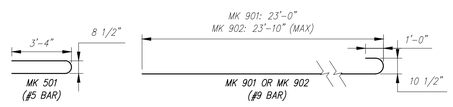

BENDING SCHEDULE
SCALE: 1/4" = 1'-0"

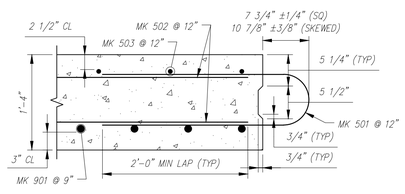

SECTION
SCALE: 1" = 1'-0"

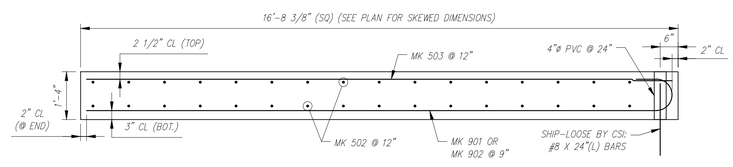

TYPICAL REINFORCING SECTION
SCALE: 1/2" = 1'-0"

PIECE QUANTITY: 1 EACH
WEIGHT: 23.09 TONS

Contractor is to verify that all information shown on drawings has been thoroughly checked, complies with the contract documents and is adequate to meet the field conditions. Some dimensions and details may differ slightly from contract drawings to accommodate the manufacturing or design process. Approval of this drawing indicates that any deviation from the contract documents has been reviewed and found to be acceptable. Production will not commence until receipt of signed, approved shop drawings.

This drawing contains information proprietary to CONCRETE SYSTEMS, INC. This drawing is disclosed with the understanding that it will be retained in confidence and its use limited solely to the purpose for which it is disclosed. It is understood that no reproduction of this drawing is authorized without permission from CONCRETE SYSTEMS, INC. and that it will be returned to CONCRETE SYSTEMS, INC. upon request.

Rev.	Date	DESCRIPTION	By
10			
9			
8			
7			
6			
5			
4			
3			
2			
1			

REVISIONS

This drawing is based upon information provided from the following documents and/or sources:
Engineer: STANTEC CONSULTING SERVICES, INC.
Project No:
Drawings: PROJECT PLANS
Specifications:
Other Sources:

Concrete Systems Inc.
9 Commercial St., Hudson, NH,03051
Phone 603-889-4163
Fax 603-889-2417

STATE AGENCY
VTrans Working to Get You There

Drawn By A KOSTENKO	Date 04/04/2016
Reviewed By	Date
Approved By	Date

VTAOT PROJ. NO.: BRF 0151(21)

MILLER CONSTRUCTION, INC.
ROUTE 106 BRIDGE REPLACEMENT T.H. 61 (KENDALL ROAD)
WOODSTOCK, VT

D | Drawing No. SHOP DRAWING – AS3 | REV 0
R-S22624-AS3

Quantity: | Project No: | SHEET AS3 OF

NOTES:
1. ALL REINFORCING TO BE LEVEL I, EPOXY COATED.
2. COVER TO REINFORCING: SEE DETAILS

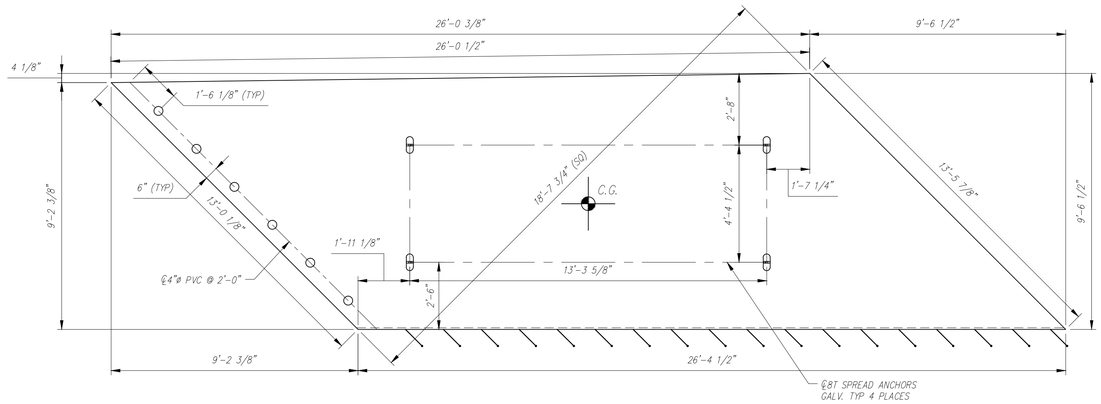

PLAN VIEW
SCALE: 3/8" = 1'-0"

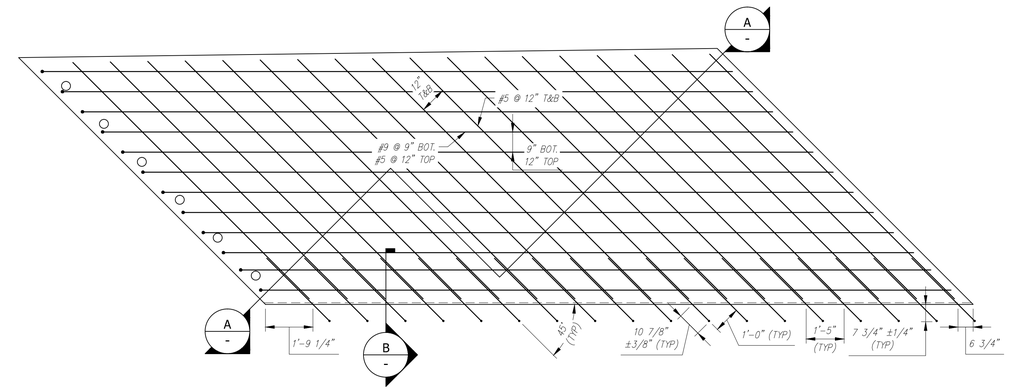

REINFORCING PLAN
SCALE: 3/8" = 1'-0"

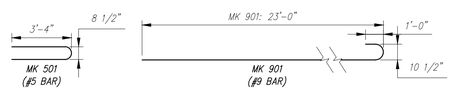

BENDING SCHEDULE
SCALE: 1/4" = 1'-0"

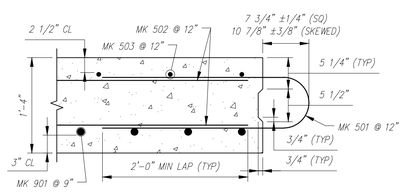

SECTION
SCALE: 1" = 1'-0"

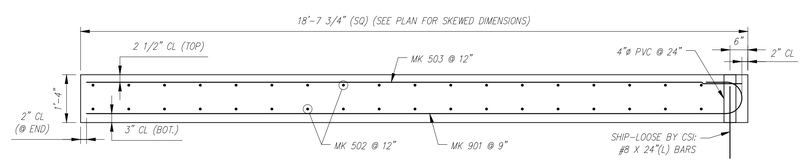

TYPICAL REINFORCING SECTION
SCALE: 1/2" = 1'-0"

PIECE QUANTITY: 1 EACH
WEIGHT: 24.71 TONS

Contractor is to verify that all information shown on drawings has been thoroughly checked, complies with the contract documents and is adequate to meet the field conditions. Some dimensions and details may differ slightly from contract drawings to accommodate the manufacturing or design process. Approval of this drawing indicates that any deviation from the contract documents has been reviewed and found to be acceptable. Production will not commence until receipt of signed, approved shop drawings.

This drawing contains information proprietary to CONCRETE SYSTEMS, INC. This drawing is disclosed with the understanding that it will be retained in confidence and its use limited solely to the purpose for which it is disclosed. It is understood that no reproduction of this drawing is authorized without permission from CONCRETE SYSTEMS, INC. and that it will be returned to CONCRETE SYSTEMS, INC. upon request.

Rev.	Date	DESCRIPTION	By
10			
9			
8			
7			
6			
5			
4			
3			
2			
1			

REVISIONS

This drawing is based upon information provided from the following documents and/or sources:
Engineer: STANTEC CONSULTING SERVICES, INC.
Project No:
Drawings: PROJECT PLANS
Specifications:
Other Sources:

CSI
Concrete Systems Inc.
9 Commercial St., Hudson, NH,03051
Phone 603-889-4163
Fax 603-889-2417

STATE AGENCY
VTrans Working to Get You There

Drawn By A KOSTENKO	Date 04/04/2016
Reviewed By	Date
Approved By	Date

VTAOT PROJ. NO.: BRF 0151(21)

MILLER CONSTRUCTION, INC.
ROUTE 106 BRIDGE REPLACEMENT T.H. 61 (KENDALL ROAD)
WOODSTOCK, VT

D | Drawing No. SHOP DRAWING – AS4 | REV 0
R-S22624-AS4

Quantity: | Project No: | SHEET AS4 OF

NOTES:
1. ALL REINFORCING TO BE LEVEL I, EPOXY COATED.
2. COVER TO REINFORCING: SEE DETAILS

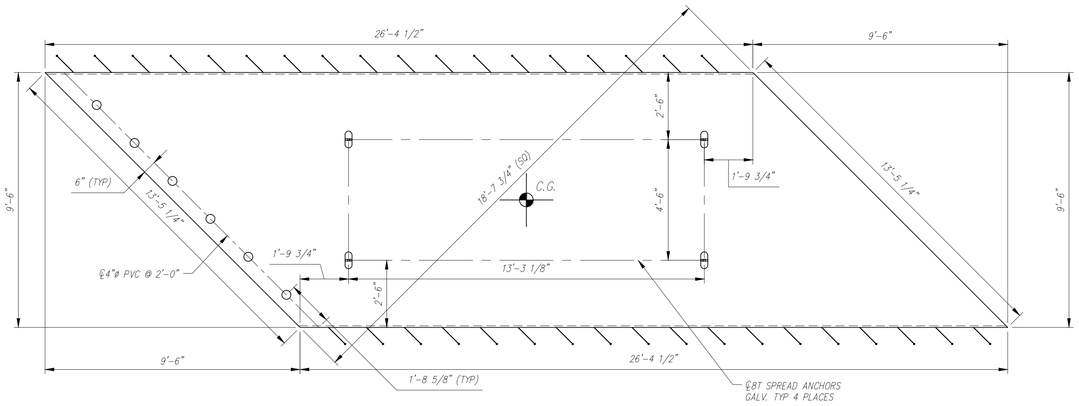

PLAN VIEW
SCALE: 3/8" = 1'-0"

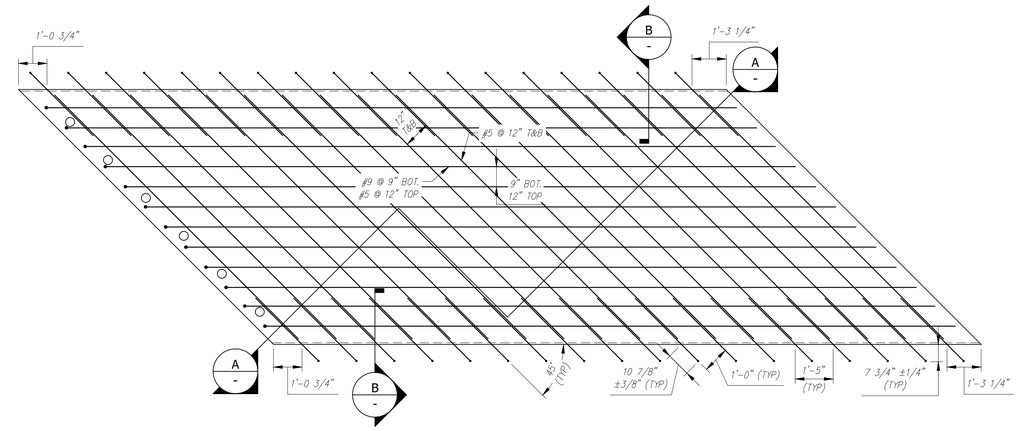

REINFORCING PLAN
SCALE: 3/8" = 1'-0"

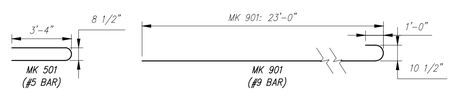

BENDING SCHEDULE
SCALE: 1/4" = 1'-0"

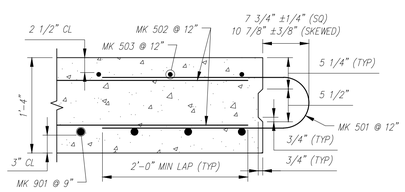

SECTION
SCALE: 1" = 1'-0"

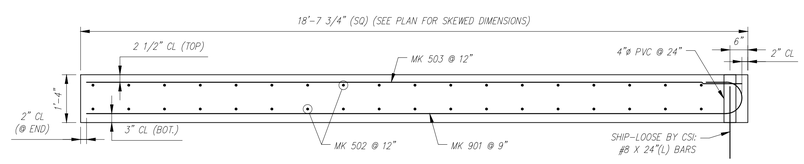

TYPICAL REINFORCING SECTION
SCALE: 1/2" = 1'-0"

PIECE QUANTITY: 1 EACH
WEIGHT: 25.06 TONS

Contractor is to verify that all information shown on drawings has been thoroughly checked, complies with the contract documents and is adequate to meet the field conditions. Some dimensions and details may differ slightly from contract drawings to accommodate the manufacturing or design process. Approval of this drawing indicates that any deviation from the contract documents has been reviewed and found to be acceptable. Production will not commence until receipt of signed, approved shop drawings.

This drawing contains information proprietary to CONCRETE SYSTEMS, INC. This drawing is disclosed with the understanding that it will be retained in confidence and its use limited solely to the purpose for which it is disclosed. It is understood that no reproduction of this drawing is authorized without permission from CONCRETE SYSTEMS, INC. and that it will be returned to CONCRETE SYSTEMS, INC. upon request.

Rev.	Date	DESCRIPTION	By
10			
9			
8			
7			
6			
5			
4			
3			
2			
1			

REVISIONS

This drawing is based upon information provided from the following documents and/or sources:
Engineer: STANTEC CONSULTING SERVICES, INC.
Project No:
Drawings: PROJECT PLANS
Specifications:
Other Sources:

CSI Concrete Systems Inc.
9 Commercial St., Hudson, NH,03051
Phone 603-889-4163
Fax 603-889-2417

STATE AGENCY
VTrans Working to Get You There

Drawn By A KOSTENKO	Date 04/04/2016
Reviewed By	Date
Approved By	Date

VTAOT PROJ. NO.: BRF 0151(21)

MILLER CONSTRUCTION, INC.
ROUTE 106 BRIDGE REPLACEMENT T.H. 61 (KENDALL ROAD)
WOODSTOCK, VT

D | Drawing No. SHOP DRAWING – AS5 | REV 0
R-S22624-AS5

Quantity: | Project No: | SHEET AS5 OF

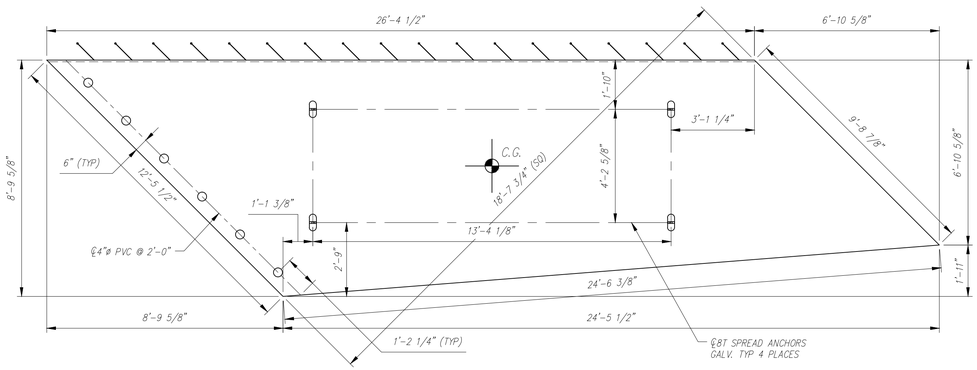

PLAN VIEW
SCALE: 3/8" = 1'-0"

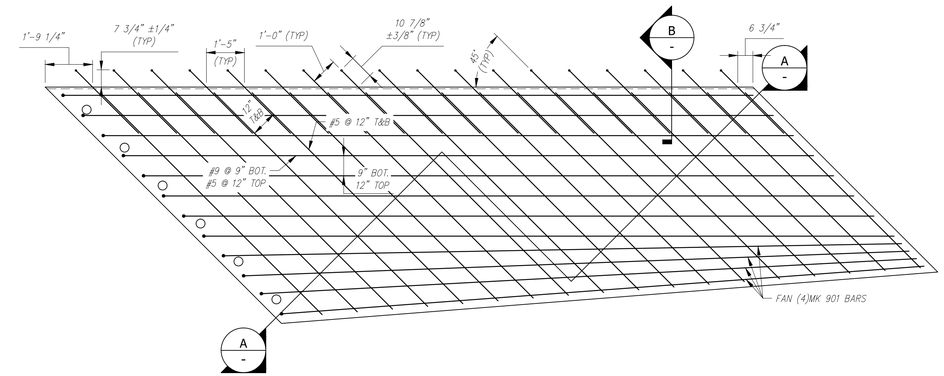

REINFORCING PLAN
SCALE: 3/8" = 1'-0"

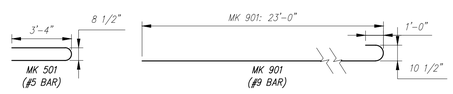

BENDING SCHEDULE
SCALE: 1/4" = 1'-0"

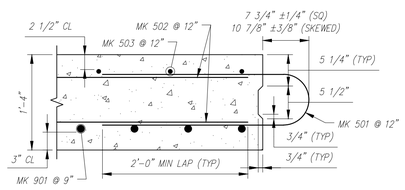

SECTION
SCALE: 1" = 1'-0"

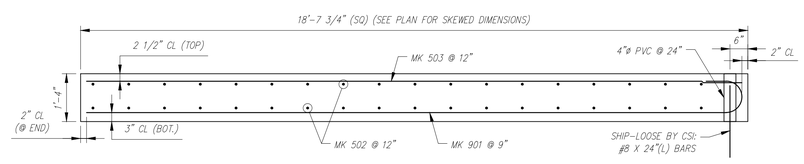

TYPICAL REINFORCING SECTION
SCALE: 1/2" = 1'-0"

PIECE QUANTITY: 1 EACH
WEIGHT: 20.70 TONS

Contractor is to verify that all information shown on drawings has been thoroughly checked, complies with the contract documents and is adequate to meet the field conditions. Some dimensions and details may differ slightly from contract drawings to accommodate the manufacturing or design process. Approval of this drawing indicates that any deviation from the contract documents has been reviewed and found to be acceptable. Production will not commence until receipt of signed, approved shop drawings.

This drawing contains information proprietary to CONCRETE SYSTEMS, INC. This drawing is disclosed with the understanding that it will be retained in confidence and its use limited solely to the purpose for which it is disclosed. It is understood that no reproduction of this drawing is authorized without permission from CONCRETE SYSTEMS, INC. and that it will be returned to CONCRETE SYSTEMS, INC. upon request.

Rev.	Date	DESCRIPTION	By
10			
9			
8			
7			
6			
5			
4			
3			
2			
1			

REVISIONS

This drawing is based upon information provided from the following documents and/or sources:
Engineer: STANTEC CONSULTING SERVICES, INC.
Project No:
Drawings: PROJECT PLANS
Specifications:
Other Sources:

CSI Concrete Systems Inc.
9 Commercial St., Hudson, NH,03051
Phone 603-889-4163
Fax 603-889-2417

STATE AGENCY
VTrans Working to Get You There

Drawn By	Date
A KOSTENKO	04/04/2016
Reviewed By	Date
Approved By	Date

VTAOT PROJ. NO.: BRF 0151(21)

MILLER CONSTRUCTION, INC.
ROUTE 106 BRIDGE REPLACEMENT T.H. 61 (KENDALL ROAD)
WOODSTOCK, VT

D | Drawing No. SHOP DRAWING – AS6 | REV 0
R-S22624-AS6

Quantity: | Project No: | SHEET AS6 OF

> BOLT POCKET FORMER

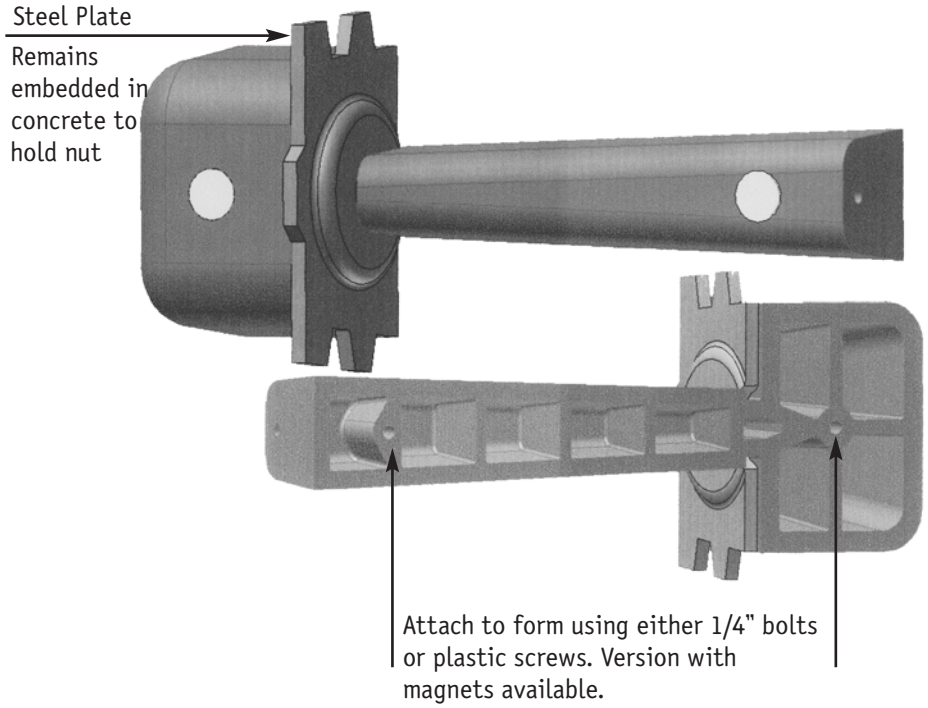

Introducing our Bolt Pocket Former – the ideal solution for tying together sections of box culvert or precast walls. This dual purpose forming device creates both a groove through the joint and a pocket for the bolt. The steel plate that remains embedded in the concrete accepts up to 1" rod. Molded out of a specially formulated urethane, our bolt pocket former will last for at least 50 pours when properly maintained. Call for more details and pricing information.

Pennsylvania Insert Corporation

phone: 800.220.4857 sales@pennsylvaniainsert.com fax: 610.948.9750

> serving concrete producers for over 30 years

BOLT POCKET FORMER

The simple forming solution for tying together sections of box culvert or precast walls.

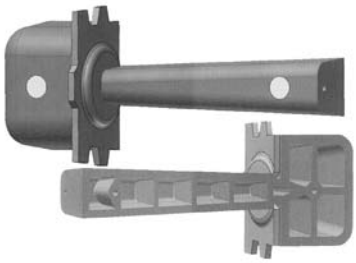

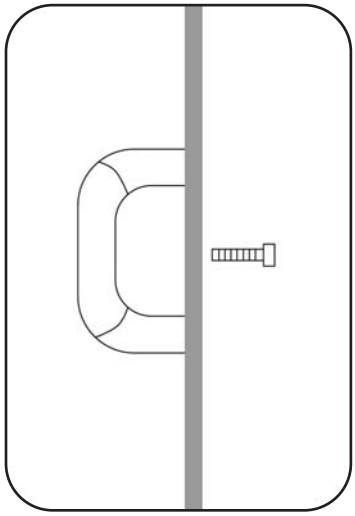

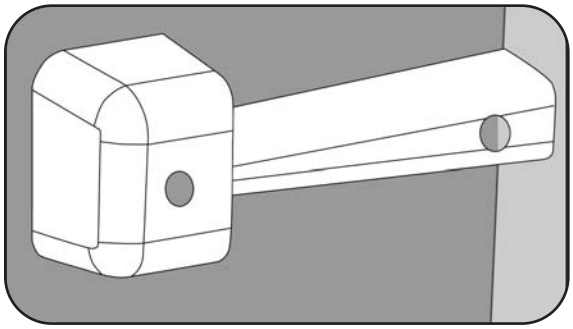

1. Attach Bolt Pocket Former to form using either 1/4” bolts or plastic screws for non collapsing forms. The inserts are replaceable should the threads show signs of wear after numerous uses.

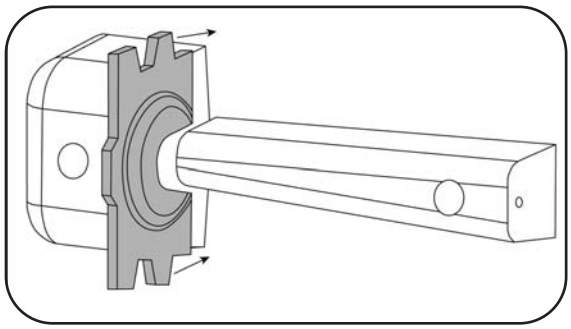

2. Slide steel plate onto Bolt Pocket Former. Pour.

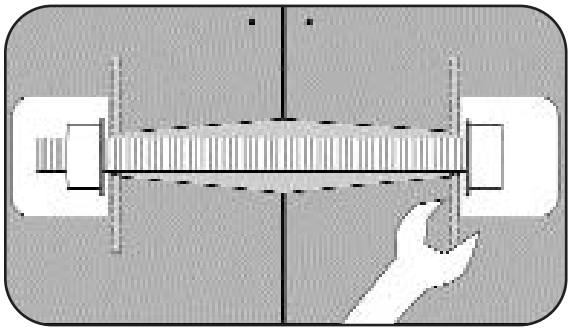

3. After stripping form, slide Bolt Pocket Former out using pliers. Steel plate remains embedded in concrete. A groove through the joint and bolt pocket are formed. For field installation*, the steel plate accepts up to 1” rod.
*We provide a field installation kit consisting of rod, 2 nuts, and 2 washers for an additional charge.

Pennsylvania Insert Corporation

FOR INFO. CALL 1-800-220-4857
or sales@pennsylvaniainsert.com

Fax to:	Customer		Approved/Notes	PA Insert Corp
Fax#	Project			PO Box 199 Spring City PA 19475 tel: 610-948-9688 fax: 610-948-9750
From	Job#	Ship Date		
Date	PA Insert Quote/Order#	Page _____of _____		email: sales@pennsylvaniainsert.com web: www.pennsylvaniainsert.com

BOLT POCKET FORMER (for up to 1" bolt)

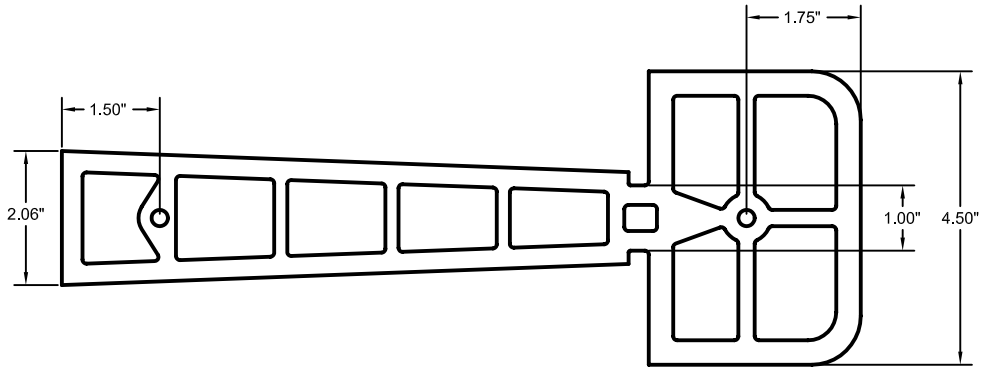

- Made from durable Urethane for reusability
- Ribbed construction increases strength
- *Replacable 1/4" Threaded Inserts
- **1/4" Galvanized Steel Plate Standard
- Available with magnets to attach to form

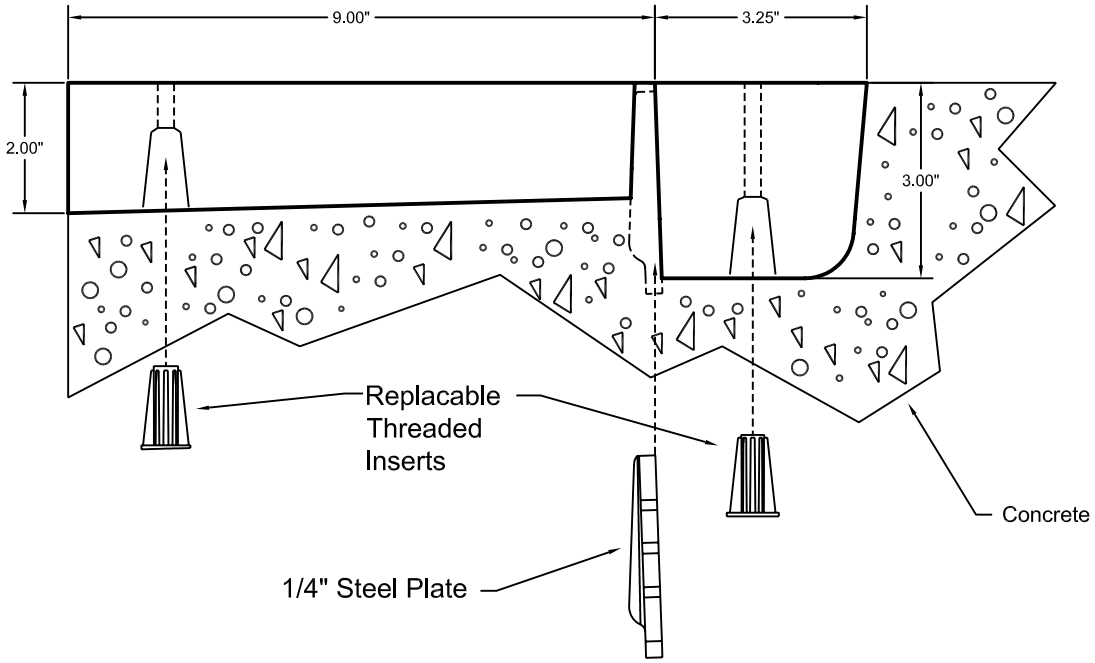

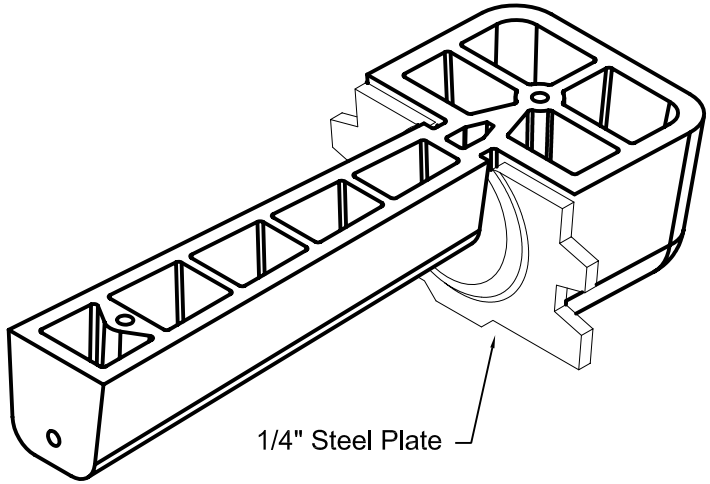

*Threaded Inserts sold separately (Part Number 1200)

**Steel Plate stays in concrete, sold separately (Part Number 4024)

06/03/04

Fax to:	Customer		Approved/Notes	PA Insert Corp
Fax#	Project			
From	Job#	Ship Date		
Date	PA Insert Quote/Order#	Page _____of _____		

PO Box 199
Spring City PA 19475
tel: 610-948-9688
fax: 610-948-9750

email: sales@pennsylvaniainsert.com
web: www.pennsylvaniainsert.com

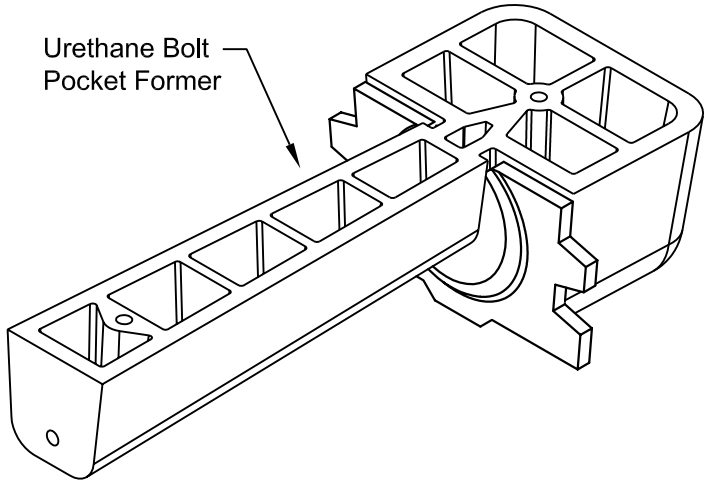

BOLT POCKET PLATE (use with bolt pocket former)

- *1/4" Galvanized Steel Plate Standard, distributes bolt load
- Teeth anchor plate securely in concrete
- Pressed center keeps bolt in position
- **Fits securely into reusable bolt pocket former

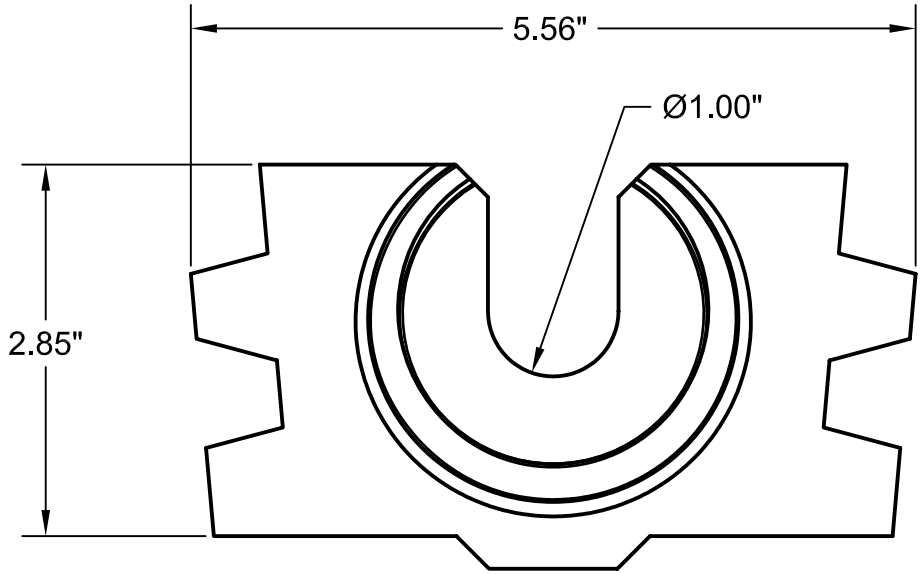

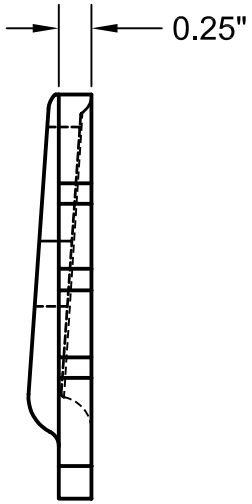

*Plain Steel or Stainless Steel Optional
**Urethane Bolt Pocket Former sold separately (part number 4023)

06/03/04

DAYTON/RICHMOND™ CONCRETE ACCESSORIES

Dowel Bar Splicer System

D-101-A Straight Dowel Bar Splicer DB-SAE, D-102-A 90° Hooked Dowel Bar Splicer, D-103-A 180° Hooked Dowel Bar Splicer, D-104-A Double-Ended Dowel Bar Splicer

The Dayton/Richmond Dowel Bar Splicer is a one-piece unit, integrally forged from ASTM A615 grade 60 deformed rebar material. The splicers are available in #4 through #11 rebar sizes to be used in conjunction with the corresponding size dowel-in to accomplish a mechanical splice designed to achieve 160% of specified yield (full mechanical ultimate).

The splicer can be furnished straight (D-101-A) cut to length, 90° and 180° hooked (D-102-A and D-103-A) and double-ended (D-104-A) in plain or epoxy coated finish. The splicer can also be special-ordered with a reduced diameter washer flange or with the washer flange clipped (in more than one direction, if required) to provide adequate concrete cover, or to avoid interference.

The D-104-A Double-Ended Dowel Bar Splicer is used to establish a direct load path through a concrete section, thus avoiding multiple hooked rebar and eliminating rebar congestion. The double-ended unit can be configured in a “U” shape for special applications.

Bar Size	Thread Size	A	B	C	D	E	Flange Diameter	Minimum P_{ult} Range = 95% F_u Actual or 160% F_y Specified*
#4 [#13]	5/8"–11 UNC	1-1/8"	1/8"	11/16"	55/64"	1"	1-7/8"	19,200 lbs.
#5 [#16]	3/4"–10 UNC	1-9/16"	1/8"	13/16"	1-3/64"	1-1/8"	2-1/16"	29,760 lbs.
#6 [#19]	7/8"–9 UNC	1-11/16"	1/8"	15/16"	1-15/64"	1-1/4"	2-1/4"	42,400 lbs.
#7 [#22]	1"–8 UNC	1-27/32"	1/8"	1-1/16"	1-27/64"	1-3/8"	2-7/16"	57,600 lbs.
#8 [#25]	1-1/8"–8 UN	2-1/16"	1/8"	1-3/16"	1-19/32"	1-1/2"	2-5/8"	75,840 lbs.
#9 [#29]	1-1/4"–8 UN	2-3/16"	1/8"	1-5/16"	1-25/32"	1-5/8"	2-13/16"	96,000 lbs.
#10 [#32]	1-7/16"–8 UN	2-7/16"	1/8"	1-1/2"	2"	1-13/16"	3"	121,920 lbs.
#11 [#36]	1-9/16–8 UN	2-9/16"	1/8"	1-5/8"	2-7/32"	1-15/16"	3-1/4"	149,760 lbs.

*Loads shown based on 160% f_y specified

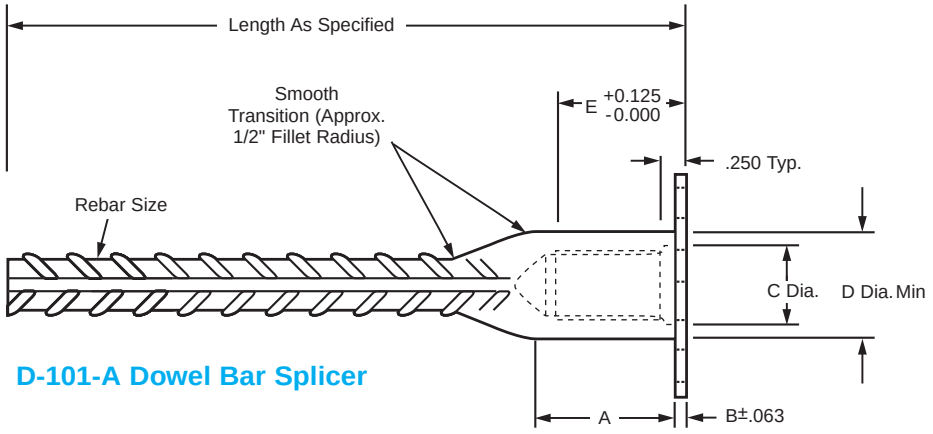

D-101-A Dowel Bar Splicer

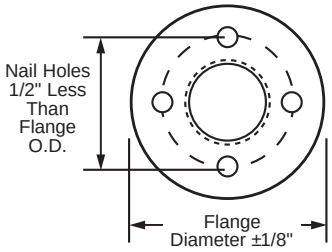

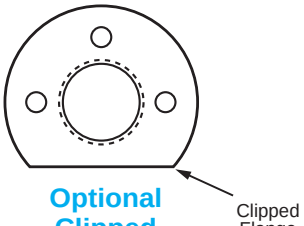

Optional Clipped Flange

Note: No. 4, 5 and 6 splicers, 18", 24" and 36" long will usually have a stamped metal plug to protect threads; all other sizes will have a plastic cap plug.

DAYTON/RICHMOND™ CONCRETE ACCESSORIES

Dowel Bar Splicer System

Specified or Required Dowel Bar				Recommended Dowel Bar Splicer and Dowel-In						
Bar Size	Grade 60 Rebar Loads (lbs.)			System Thread Size*	DB-SAE Bar Size	Dowel-In Bar Size	System Stress Area (min.)	Completed Splice (lbs.)		
	P_y	1.25 P_y	P_{ult}					P_y	1.25 P_y	Minimum P_{ult} Range = 95% F_u Actual or 160% F_y Specified**
#4 [#13]	12,000	15,000	18,000	5/8"-11	#4	#4	.20	12,000	15,000	19,200
#5 [#16]	18,600	23,250	27,900	3/4"-10	#5	#5	.31	18,600	23,250	29,760
#6 [#19]	26,400	33,000	39,600	7/8"-9	#6	#6	.44	26,400	33,000	42,400
#7 [#22]	36,000	45,000	54,000	1"-8	#7	#7	.60	36,000	45,000	57,600
#8 [#25]	47,400	59,250	71,100	1-1/8"-8	#8	#8	.79	47,400	59,250	75,840
#9 [#29]	60,000	75,000	90,000	1-1/4"-8	#9	#9	1.00	60,000	75,000	96,000
#10 [#32]	76,200	95,250	114,000	1-7/16"-8	#10	#10	1.27	76,200	95,250	121,920
#11 [#36]	93,600	117,000	140,400	1-9/16"-8	#11	#11	1.56	93,600	117,000	149,760

P_y=Minimum Yield Strength of bar.
*5/8", 3/4", 7/8" and 1" sizes have UNC Threads. 1-1/8" and larger sizes are equipped with UN Threads.
**Loads shown based on 160% f_y specified.

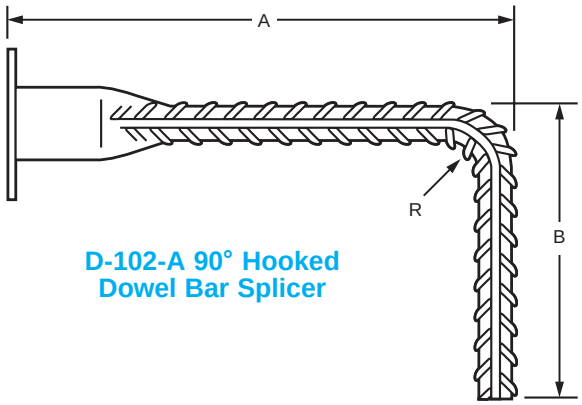

D-102-A 90° Hooked Dowel Bar Splicer

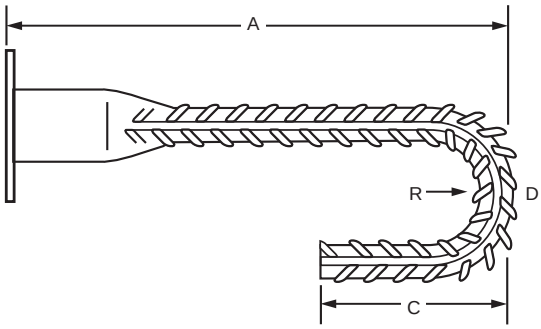

D-103-A 180° Hooked Dowel Bar Splicer

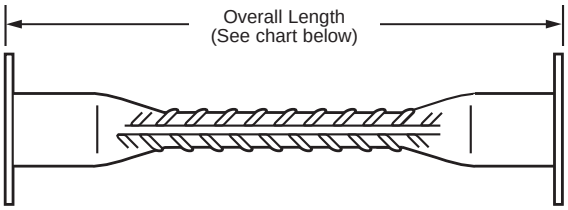

D-104-A Double-Ended Dowel Bar Splicer

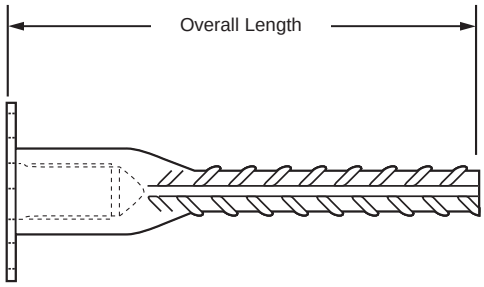

D-101-A Dowel Bar Splicer

D-104-A Double-Ended Min. Lengths		Tolerance Overall Length
#4 [#13]	12" O.A.	+0 - 3/8"
#5 [#16]	12" O.A.	+0 - 3/8"
#6 [#19]	14" O.A.	+0 - 1/2"
#7 [#22]	16" O.A.	+0 - 5/8"
#8 [#25]	16" O.A.	+0 - 3/4"
#9 [#29]	16" O.A.	+0 - 1"
#10 [#32]	16" O.A.	+0 - 1"
#11 [#36]	16" O.A.	+0 - 1"

See D-108 Headed Dowel Bar Splicer on page 17.

To Order:
Specify: (1) quantity, (2) name, (3) bar size (should be equivalent to the rebar being substituted for on the structural drawings), (4) dimensions required.

Example:
600, D-101-A Dowel Bar Splicers, #5 rebar, 36" long.

DAYTON/RICHMOND™ CONCRETE ACCESSORIES

Dowel Bar Splicer System

D-101 Dowel-in, D-102 90° Hooked Dowel-in, D-103 180° Hooked Dowel-in, D-104 Double-Ended Dowel-in

The Dayton/Richmond Dowel-In is available Straight (D-101), 90° and 180° Hooked (D-102 and D-103) and Double-Ended (D-104). Each is manufactured from grade 60 deformed rebar material and is available in rebar sizes #4 through #11 in plain or epoxy coated finish. The threaded end of the Dowel-In is enlarged by forging, before threading, to ensure that the cross-sectional area of the bar is not reduced by the threading operation. This design feature assures full ultimate strength of the rebar. Dowel-ins are configured to facilitate easy installation and can be easily assembled by hand. On larger projects, such as highway paving, a centrifugal chuck on an electric or air-powered drill motor can be employed to speed installation. See the D-49 Magna Jaw on Page 65.

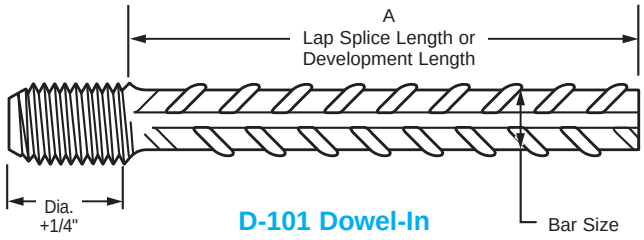

D-101 Dowel-In

To Order:
Specify: (1) quantity, (2) name, (3) bar size (should be equivalent to the rebar being substituted for on the structural drawings), (4) dimensions required (see below).

Example:
600, D-102 90° Hooked Dowel-Ins, #5 rebar, A=14", B=8"

Specified or Required Dowel Bar				Recommended Dowel Bar Splicer and Dowel-In						
Bar Size	Grade 60 Rebar Loads (lbs.)			System Thread Size*	DB-SAE Bar Size	Dowel-In Bar Size	System Stress Area (min.)	Completed Splice (lbs.)		
	P_y	1.25 P_y	P_{ult}					P_y	1.25 P_y	Minimum P_{ult} Range = 95% F_u Actual or 160% F_y Specified**
#4 [#13]	12,000	15,000	18,000	5/8"-11	#4	#4	.20	12,000	15,000	19,200
#5 [#16]	18,600	23,250	27,900	3/4"-10	#5	#5	.31	18,600	23,250	29,760
#6 [#19]	26,400	33,000	39,600	7/8"-9	#6	#6	.44	26,400	33,000	42,400
#7 [#22]	36,000	45,000	54,000	1"-8	#7	#7	.60	36,000	45,000	57,600
#8 [#25]	47,400	59,250	71,100	1-1/8"-8	#8	#8	.79	47,400	59,250	75,840
#9 [#29]	60,000	75,000	90,000	1-1/4"-8	#9	#9	1.00	60,000	75,000	96,000
#10 [#32]	76,200	95,250	114,000	1-7/16"-8	#10	#10	1.27	76,200	95,250	121,920
#11 [#36]	93,600	117,000	140,400	1-9/16"-8	#11	#11	1.56	93,600	117,000	149,760

P_y=Minimum Yield Strength of bar.
*5/8", 3/4", 7/8" and 1" sizes have UNC Threads. 1-1/8" and larger sizes are equipped with UN Threads.
**Loads shown based on 160% f_y specified.

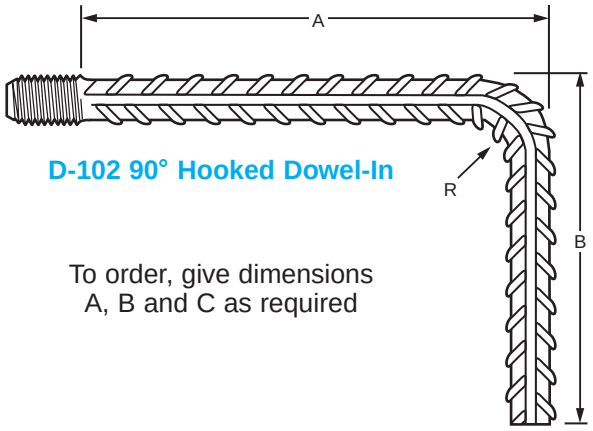

D-102 90° Hooked Dowel-In

To order, give dimensions A, B and C as required

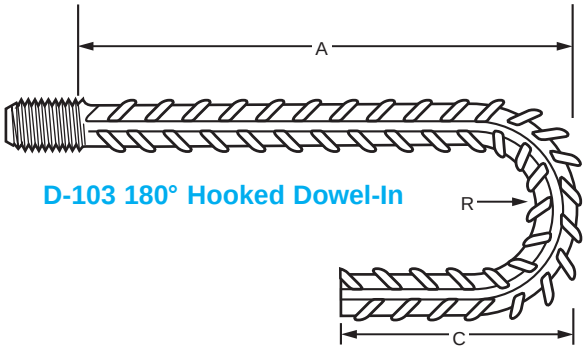

D-103 180° Hooked Dowel-In

See D-108 Headed Dowel-In on page 17.

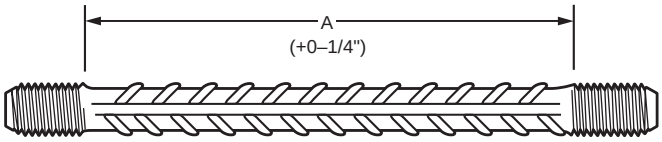

D-104 Double-Ended Dowel-In

CONSOLIDECK®

PROSOCO
SINCE 1939

Saltguard® WB

deep-penetrating water & salt barrier

DESCRIPTION AND USE

Consolideck® Saltguard® WB is a ready-to-use water-based, VOC compliant silane/siloxane water repellent and "chloride screen" for the protection of concrete and masonry surfaces. Saltguard® WB penetrates more deeply than conventional water- or solvent-based water repellents. Low odor and alkaline stable, Saltguard® WB is ideal for field or in-plant application to concrete and most masonry surfaces. Saltguard® WB protects horizontal and vertical surfaces from moisture intrusion and chemical attack of chloride salts.

Saltguard® WB's Volatile Organic Compound (VOC) content is 194 grams/liter.

In coastal areas, Saltguard® WB protects against salt air by screening chlorides from penetrating through concrete to the reinforcing steel. Saltguard® WB reduces rebar corrosion and surface spalling caused by water-carried salts. Use Saltguard® WB on horizontal surfaces such as driveways, sidewalks, tile or brick pavers. Provides excellent protection for retaining walls, bridge pilings and other vertical areas exposed to deicing salts.

Saltguard® WB is a ready-to-use effective alternative to conventional solvent-based silanes and siloxanes. Saltguard® WB penetrates and chemically bonds deep within the concrete or masonry substrate to provide long-lasting protection against moisture intrusion and water-related staining or deterioration.

Properly applied, Saltguard® WB produces no surface film. Treated surfaces keep their natural breathing characteristics and natural appearance.

Saltguard® WB is recommended for these substrates. Always test. Coverage is in square feet/meters per gallon.

Substrate	Type	Use?	Coverage
Architectural Concrete Block	Burnished	❖	
	Smooth	❖	
	Split-faced	❖	
	Ribbed	❖	
Concrete	Brick	**yes**	150-300 sq. ft. 14-28 sq. m.
	Tile	**yes**	
	Precast Panels	**yes**	
	Pavers	**yes**	
	Cast-in-place	**yes**	
Fired Clay	Brick	**yes**	100-175 sq. ft. 9-16 sq. m.
	Tile	**yes**	
	Terra Cotta	**yes**	
	Pavers	**yes**	
Marble, Travertine, Limestone	Polished	no	NA
	Unpolished	no	NA
Granite	Polished	no	NA
	Unpolished	no	NA
Sandstone	Unpolished	**yes**	100-175 sq. ft. 9-16 sq. m.
Slate	Unpolished	no	NA

❖ Sure Klean® Custom Masonry Sealer or Weather Seal Blok-Guard® & Grafitti Control may be more appropriate. Always test to ensure desired results. Coverage estimates depend on surface texture and porosity.

ADVANTAGES

- **Penetrates to produce long-lasting protection on vertical or horizontal surfaces.**
- **Water-based formula minimizes explosion and fire hazards associated with alcohol- or solvent-based water repellents.**
- **Easy soap-and-water cleanup from window glass, window frames and application equipment.**
- **Low odor reduces risk of application to occupied buildings.**
- **Alkaline stable — suitable for new "green" concrete, 14-28 days old.**
- **Effective protection against deicing salts and salt air.**

Limitations

- Will not prevent water penetration through structural cracks, defects or open joints.
- Water repellency of treated surfaces will increase for up to 14 days after application.

TECHNICAL DATA

ACTIVE SUBSTANCE: Emulsion of silanes and oligomeric alkyl alkoxysiloxanes.
ACTIVE MATERIAL CONTENT: 10%
FORM: White, milky liquid
SPECIFIC GRAVITY: 0.990
FLASH POINT: >200°F (>93°C)
FREEZE POINT: 32°F (0°C)
VOC: 194 grams/liter (ASTM D 3960)
WT./GAL.: 8.24 lbs.

Performance Tests

Laboratory testing has shown this product to be a singularly effective general purpose water repellent/chloride screen.

 ©Copyright PROSOCO, Inc. 2002

NCHRP 244 Series II Reduction of Water absorption (compared to untreated control)	89%
NCHRP 244 Series IV Reduction in total chloride ion concentration (as compared to untreated control specimens)	91%
AASHTO T259/260	
Chloride penetration	2.8
Total chlorides, pcy	2.1
ASTM C 140 Reduction of water absorption (compared to untreated control)	92%
ASTM C 67 Reduction of water absorption (compared to untreated control)	94%
ASTM E 514 Wind-driven rain penetration (percent reduction of control)	89%
Surface deterioration/discoloration:	None
Penetration (depending on substrate)	1-10 mm
Resistance to:	
· Sunlight	Excellent
· Alkalinity	Excellent
Surface Appearance (after application)	No change

Saltguard® WB is not suitable for application to synthetic resin paints, gypsum, or other nonmasonry surfaces. The product may not be suitable for surfaces to receive paints or coatings. Always test for compatibility.

PREPARATION

Protect people, property, vehicles, and (to minimize cleanup) all nonmasonry surfaces that may come into contact with the product, spray, wind drift or fumes. Protect and/or divert pedestrian and auto traffic.

Though Saltguard® WB has very little odor, avoid exposing building occupants to fumes. Maintain adequate ventilation when working on interior surfaces.

Surface Preparation

Thoroughly clean the surface using the appropriate Sure Klean® or Enviro Klean® product. Remove any curing compound or previous sealer. Though Saltguard® WB may be applied to slightly damp surfaces, best performance is achieved on clean, visibly dry and absorbent surfaces. Excessive moisture inhibits penetration and reduces the service life and performance of the treatment.

Clean newly constructed and repointed surfaces before application. Saltguard® WB won't impair adhesion of most sealing and caulking compounds. Always test for compatibility.

Surface and air temperatures must be at least 40°F (4°C) during application and above 40°F (4°C) for 8 hours following. If freezing conditions exist before application, let masonry thaw thoroughly. Subfreezing temperatures will freeze/crystallize Saltguard® WB, inhibiting penetration and significantly impairing results. Surface and air temperatures should not exceed 95°F (35°C). Higher temperatures evaporate the water carrier, reducing penetration.

Equipment

Apply with brush, roller or low-pressure spray (20 psi). Set sprayer to produce a wet stream. Avoid atomization of the material. Make sure all containers used for mixing or handling are clean and uncontaminated.

APPLICATION

Before use, read "Preparation" and "Safety Information."

ALWAYS TEST each type of surface for suitability and results before overall application. Test using the following application instructions. Let test dry thoroughly before inspection. Mix well before applying.

DO NOT DILUTE OR ALTER MATERIAL, OR USE FOR PURPOSES OTHER THAN SPECIFIED.

Vertical Application Instructions

For best results, apply Saltguard® WB "wet-on-wet" to a visibly dry and absorbent surface.

Spray: saturate from the bottom up. Apply enough for a 4" to 8" (15 to 20 cm) rundown below the spray contact point. Let the first application penetrate for 5-10 minutes. Reapply in the same saturating manner. Less material will be needed for the second application.

Brush or roller: apply uniformly. Saturate the surface. Let Saltguard® WB penetrate for 5 to 10 minutes. Brush out heavy runs and drips that don't penetrate.

Horizontal Application Instructions

1. Apply Saltguard® WB in a single saturating application. Use enough to keep the surface wet for 2 to 3 minutes before penetrating.
2. Broom out all puddles thoroughly until they penetrate the surface. Wipe up all excess material.

Treated surfaces will dry to touch within 1 hour. Protect surfaces from rainfall for a minimum of 6 hours following treatment. Treated surfaces will be ready for pedestrian and vehicle traffic in 24 hours. Many surfaces may require several days to achieve full water repellent effectiveness.

 ©Copyright PROSOCO, Inc. 2002

Dense Surface Application Instructions
Apply a single coat. Use enough Saltquard WB to completely wet the surface without creating drips, puddles or rundown. DO NOT OVERAPPLY. Test for application rate.

Cleanup
Clean tools, equipment, and surfaces affected by overspray with soap and warm water.

Paint Adhesion
Surfaces treated with Saltguard® WB may be coated with silicone emulsion paints and many oil- base paints. Always test to assure adhesion. Adhesion may be improved if surface is pressure- rinsed and allowed to dry before application.

Adhesion of some cementitious coatings, plaster, stucco, etc., may be adversely affected. Such surface treatments should be installed and allowed to thoroughly cure before installation of Saltguard® WB.

Always test to verify compatibility between Saltguard® WB and other proposed surface treatments.

SAFETY INFORMATION

Caution. May cause eye and skin irritation. For use by professional applicators only. Keep out of reach of children.

Precautions:
Contains: Oligomeric alkyl alkoxysiloxane. Avoid eye contact. Wear safety glasses or splash goggles depending on application procedures. Avoid prolonged skin contact. If skin is sensitive or becomes irritated, wear rubber gloves. Wear long-sleeved work clothing or splash-resistant clothing as needed. Do not breath mists. May cause respiratory irritation. Wear a NIOSH-approved dust/mist respirator as needed. Wash thoroughly after handling. Generates ethyl and methyl alcohol during curing. Maintain adequate ventilation inside. **Storage and handling:** Store and transport upright with lid tightly in place. Store in a cool, dry place. Keep from freezing. Do not reuse or remove the label. **Do not alter,** dilute product or use for applications other than specified. **If spilled,** keep from drains and soil. Absorb with inert media. Dispose of contaminated absorbent, container and product in accordance with local, state and federal regulations. Read the MSDS and label for additional cautionary information.

First Aid
Ingestion: Call a physician, emergency room or poison control center immediately for instruction on properly inducing vomiting. Get medical assisatance.
Eye Contact: Rinse thoroughly for 15 minutes. Get immediate medical assistance.
Skin Contact: Remove contaminated clothing and rinse thoroughly for 15 minutes. Seek medical assistance if persistent irritation develops. Launder contaminated clothing before reuse.
Inhalation: Seek medical attention if irritation develops.

Shelf Life: 1 year from the date of manufacture in tightly sealed, unopened container.

24 Hour Emergency Information: INFOTRAC at 1-800-535-5053

VOC content =194 g/ L.

WARRANTY

The information and recommendations made are based on our own research and the research of others, and are believed to be accurate. However, no guarantee of their accuracy is made because we cannot cover every possible application of our products, nor anticipate every variation encountered in masonry surfaces, job conditions and methods used. The purchasers shall make their own tests to determine the suitability of such products for a particular purpose.

PROSOCO Inc. warrants this product to be free from defects. **Where permitted by law, PROSOCO makes no other warranties with respect to this product, express or implied, including without limitation the implied warranties of merchantability or fitness for particular purpose.** The purchaser shall be responsible to make his own tests to determine the suitability of this product for his particular purpose. PROSOCO's liability shall be limited in all events to supplying sufficient product to re- treat the specific areas to which defective product has been applied. Acceptance and use of this product absolves PROSOCO from any other liability, from whatever source, including liability for incidental, consequential or resultant damages whether due to breach of warranty, negligence or strict liability. This warranty may not be modified or extended by representatives of PROSOCO, its distributors or dealers.

CUSTOMER CARE

Factory personnel are available for product, environment and job- safety assistance with no obligation. Call 800- 255- 4255 and ask for Customer Care - technical support.

Factory- trained representatives are established in principal cities throughout the continental United States. Call Customer Care at 800- 255- 4255, or visit our website at www.prosoco.com, for the name of the Consolideck® representative in your area.

 ©Copyright PROSOCO, Inc. 2002

NMB SPLICE-SLEEVE® SYSTEM

USER'S MANUAL

V. 1.03

SPLICE SLEEVE NORTH AMERICA, INC.

09/11

NMB SPLICE-SLEEVE® SYSTEM

USER'S MANUAL v.1.03

CONTENTS: PAGE

I.	GENERAL INFORMATION	I-2 ~ I-20
II.	ENGINEERING NOTES	II-1 & 2
III.	PLANT OPERATION	III-1 ~ III-21
IV.	FIELD OPERATION	IV-1
	PART 1 ERECTION	IV-2 ~ IV-12
	PART 2 GROUTING	IV-13 ~ IV-24
V.	TROUBLE SHOOTING	V-1 ~ V-5

©1988 - 2011 Splice Sleeve North America, Inc. All Rights Reserved. Printed in U. S. A.
This manual is fully protected by copyright and may not be reproduced in whole or in part in any manner.

I. GENERAL INFORMATION

1. SCOPE I-3

2. GENERAL INFORMATION I-3

3. APPROVAL AND RECOGNITION I-5

4. NMB SPLICE-SLEEVE® SYSTEM ABBREVIATIONS I-6

5. NMB SPLICE-SLEEVE® SYSTEM COMPONENTS I-7

1) NMB SPLICE-SLEEVE®
(1) Steel Specifications I-8
(2) Dimensions I-8
(3) Features I-11

2) SS MORTAR® (Grout)
(1) Description I-12
(2) Physical Properties I-12
(3) Required Quantity per sleeves (see Engineering Data Sheet) I-13

3) ACCESSORIES, TOOLS, EQUIPMENT AND OTHER MATERIALS I-19
(1) End Cap Plug (RP, PP) I-19
(2) Sleeve Setter (STR) I-19
(3) Inlet and Outlet Tubes I-20
(4) Hole Seals (HS) I-20
(5) Washer (GRW) I-20
(6) Coil Spring I-20
(7) Mixer I-20
(8) Grout Pump I-20
(9) Stoppers I-20

1. SCOPE

This manual shows the details of application of the NMB Splice-Sleeve® System for splicing reinforcing bars as used in construction of both cast-in-place and precast concrete structures.

Structural design and details other than those relating to the NMB Splice-Sleeve System shall be in accordance with the relevant specifications, codes, drawings, engineering data and other design requirements which are not provided for in this manual.

The NMB Splice-Sleeve System utilizes two basic grouting methods which are called the Post-Grout System and the Pre-Grout System.

The choice of grouting system to be used is both an engineering and economic decision, to be made by the structural engineer in coordination with the erection and grouting contractors.

2. GENERAL INFORMATION

The purpose of this manual is to provide guidance to users of NMB Splice-Sleeves.

Splice Sleeve North America, Inc. (SSNA) warrants the NMB Splice-Sleeves and accessories supplied by SSNA, described in the product specifications, to be free from defects in material and workmanship provided that they are properly installed pursuant to SSNA instructions.

SSNA's obligation under this warranty is limited to replacement of a defective part or parts, when notified within 60 days from date of purchase and before installation.

In no event shall SSNA be liable for consequential or special damages or other charges for adjustments, repairs, replacement of parts, installation or other work which may be done upon, or in connection with, such product by the purchaser. Rust on the surface of the product, to the extent limited by ACI 318-11 Building Code (Section 7.4.2) shall not be construed as a defect.

The warranties provided in the obligations and liabilities of SSNA are exclusive. The purchaser hereby waives all of the remedies, warranties, guarantees or liabilities whether express or implied. No one is authorized to make any warranty or representation as to the use of this product other than those set forth in the SSNA User's Manual, brochures, general literature and data sheet.

The user is advised to read all statements, recommendations and suggestions herein in regard to the use of the title of the material. It is based on the best knowledge of SSNA. These represent generally accepted procedures for successful installation. They may be followed, modified or rejected by the owner, engineer, contractor or their representative since they are responsible for planning and executing procedures appropriate to a specific application. SSNA assumes no responsibility for the use of these statements, recommendations or suggestions, nor does it intend them as a recommendation for any use which would infringe any patent or copyright.

Any products listed in this manual which are manufactured or supplied by firms other than SSNA are mentioned for the convenience of the purchaser. SSNA does not warrant nor guarantee the performance of products supplied by others. All complaints, requests for information, and technical assistance, as well as purchase orders, should be referred directly to those manufacturers.

SSNA does not warrant the grout used to fill the sleeves. The only grout acceptable is that certified as SS Mortar® by SSNA as meeting the requirements for use in the sleeves under ER-5645 and NER-21 7 as outlined below.

The instructions for installing the grout in the sleeves are thoroughly outlined in this manual. Failure to follow the manufacturer's installation instructions will void any and all warranties outlined above.

Special inspection of NMB Splice-Sleeves is conducted during installation as required by the applicable building code as referenced by ER-5645 report issued by ICC Evaluation Service, Inc. This report is valid for the latest versions of the ICC International Building Code (including ACI318-11) and the International Residential Code. Sleeves must be grouted with SS Mortar® developed for specific use with the NMB Splice-Sleeve System.

The use of any other grout, unless it is certified as approved SS Mortar® by SSNA will void all warranties. SSNA can not be responsible for difficulty caused by use of non-approved grouting materials, or by inferior workmanship.

The performance and quality of the grout is the responsibility of the grout manufacturer. The specifications provided by the grout manufacturer shall be the basis for determining the performance characteristics of the grout.

The grout manufacturer is responsible for assuring that the user is properly instructed in the mixing and testing of the grout. AII questions relating to grout performance shall be referred to the grout manufacturer. For grouting procedures and techniques not provided for in this manual, please contact SSNA. Grout proportioning and mixing information provided in this manual are for guidance only and do not take precedence over the grout manufacturer's recommendations.

NMB Splice-Sleeves® are designed to structurally join reinforcing bars. Responsibility lies with the structural engineer to specify the correct size, location, strength and distribution of reinforcing bars to achieve a structurally sound connection between concrete elements. For special structural cases, such as when a column or wall panel is free-standing prior to the installation of adjoining structural elements, the structural engineer should be consulted regarding the proper time to remove supports and braces.

Engineering Data Sheet GROUTPRO provides approximate data on the strength of the splice with respect to compressive strength of the grout. Engineering Data Sheets are revised from time to time as warranted by field experience. The user should contact SSNA to determine that the latest revision of this document is included with the Users Manual. If not, a copy may be ordered from SSNA.

The technical information and procedures outlined in this manual are the intellectual property of SSNA. Certain procedures, details, methods, descriptions, techniques and applications shown throughout this manual are copyrighted. Application of this information and the mixing of accessories, tools, etc. to any product other than the NMB Splice-Sleeve System is not allowed and may create a hazardous situation. SSNA will not be held liable for the use of this information or the misapplication of equipment to other products.

3. APPROVAL AND RECOGNITION

- Evaluation Report ER-5645: International Code Council (ICC)
- National Evaluation Report NER-217: National Evaluation Service, Inc. The Building Officials and Code Administrators (BOCA) and The Southern Building Code Congress International (SBCCI)
- New York City Board of Standards and Appeals, Calendar No. 329-89-SM
- City of Los Angeles, Departments of Building and Safety, Research Report: RR25385
- Most U.S. State Department of Transportation
- Building Center of Japan, Ministry of Construction
- Housing Development Board, Singapore
- Ministry of Works and Development, New Zealand

4. NMB SPLICE-SLEEVE SYSTEM ABBREVIATIONS

DESCRIPTION	ABBREVIATION	EXAMPLE
1. System		
Post-Grout system	PG	5U-X(PG)
Pre-Grout System	PRE	5U-X(PRE)
2. Principle Components		
NMB Splice-Sleeve	NMB	
SS Mortar (Grout)	SSM	
3. Accessories		
End Cap - Rubber Plug	RP	RP-5
End Cap - Cone Plug	CP	CP-11
End Cap – End Plug	EP	EP-9/11
Polyethylene Plug	PP	PP-18
Grout Washer (for PG position)	GRW	GRW-5
Coil Spring	CS	
PVC Grout Tubes	PVC	PVC 14 mm (or PVC 22mm)
Hole Seal	HS	
4. Tools		
Sleeve Setter-Cam Type for U-X, SNX and AW Sleeves	STR-CT	STR-CT-5
Setter Rubber for STR	SR	SR-5
Setter Washer for STR	SW	SW-5
5. Equipment		
Grout Pump	PUMP or GP	GP-2HD/SS
Electric drill for mixing	MIXER	
Mixing Paddle	BLADE MB	Jiffler 141

5. NMB SPLICE-SLEEVE SYSTEM COMPONENTS

The components required for the NMB Splice-Sleeve® System are listed below.
NMB Splice-Sleeves are supplied with the Standard Accessories marked with *.
Optional Accessories and Field Accessories marked with ‘ are available by separate order or local purchase.

Post-Grout System (sleeve above joint)	**Pre-Grout System** (sleeve below joint)
Principle Components:	
NMB Splice-Sleeve (NMB)	NMB Splice-Sleeve (NMB)
SS Mortar® (SSM)	SS Mortar (SSM)
Standard Accessories*(included):	
End Cap (RP)	End Cap (RP)
Washer (GRW)	
Hole Seals (HS)	
Optional Accessories ‘(may be needed):	
PVC tubing (PVC)	PVC tubing (PVC)
Recessed Hole Seals (RHS)	
Sleeve Setter (STR-CT)	Sleeve Setter (STR-CT)
or Setter Parts (SR & SW)	or Setter Parts (SR & SW)
Field Accessories’:	
Grout Pump	Pouring Cup (or Grout Pump)
Mixer & Blade	Mixer & Blade

1) NMB SPLICE-SLEEVE

(1) Steel specifications

The material properties of the NMB Splice-Sleeve® conform to manufacturer's specification based on ASTM A536-85.

(2) Dimensions (See Table-1 & 2)

Table-1 Dimensions of NMB Splice-Sleeves

Dimensions of NMB Splice Sleeves											Recommended Rebar Embedment Length					
Sleeve No.	Bar Dia.	Bar Size		Sleeve Length (L) inch	Narrow End Diameter		Max. Dia. (B) inch	Wide End Diameter			Factory Dowel (E1) inch		Field Dowel (E2) inch			SS Mortar lbs. per Sleeve
		ASTM	Metric Canada		I.D. (C) inch	O.D. (C') inch		I.D. (A) inch	Total Tolerance inch	O.D. (A') inch						
											Minimum	Maximum	Minimum	Average	Maximum	
5U-X	0.625	#5	15MM	9.65	0.87	1.42	1.81	1.26	0.63	1.81	4.13	4.33	4.13	4.53	4.92	1.26
6U-X	0.750	#6	20MM	11.22	1.02	1.57	1.97	1.42	0.67	1.97	4.92	5.12	4.92	5.32	5.71	1.76
7U-X	0.875	#7		12.80	1.14	1.69	2.28	1.73	0.86	2.28	5.71	5.91	5.71	6.11	6.50	2.65
8U-X	1.000	#8	25MM	14.57	1.30	1.90	2.48	1.89	0.89	2.48	6.50	6.69	6.50	6.99	7.48	3.46
9U-X	1.128	#9	30MM	16.34	1.42	2.01	2.60	2.01	0.89	2.60	7.40	7.56	7.40	7.88	8.35	3.95
10U-X	1.270	#10		17.91	1.57	2.20	2.80	2.16	0.89	2.80	8.19	8.35	8.19	8.66	9.13	4.94
11U-X	1.410	#11	35MM	19.49	1.73	2.40	3.03	2.32	0.91	3.03	8.98	9.13	8.98	9.45	9.92	6.02
SNX-11	1.410	#11	35MM	19.09	1.69	2.52	3.03	2.32	0.91	3.03	8.86	9.25	8.27	8.86	9.45	5.71
A11W	1.410	#11	35MM	19.49	1.73	3.31	3.30	2.60	1.19	3.31	8.86	9.84	8.27	8.96	9.65	6.99
14U-X	1.693	#14	45MM	24.41	2.01	2.80	3.46	2.60	0.91	3.46	11.42	11.61	11.42	11.91	12.40	9.19
18U-X	2.257	#18	55MM	36.22	2.68	3.66	4.72	3.27	1.01	4.25	17.00	18.11	17.00	17.56	18.11	25.31

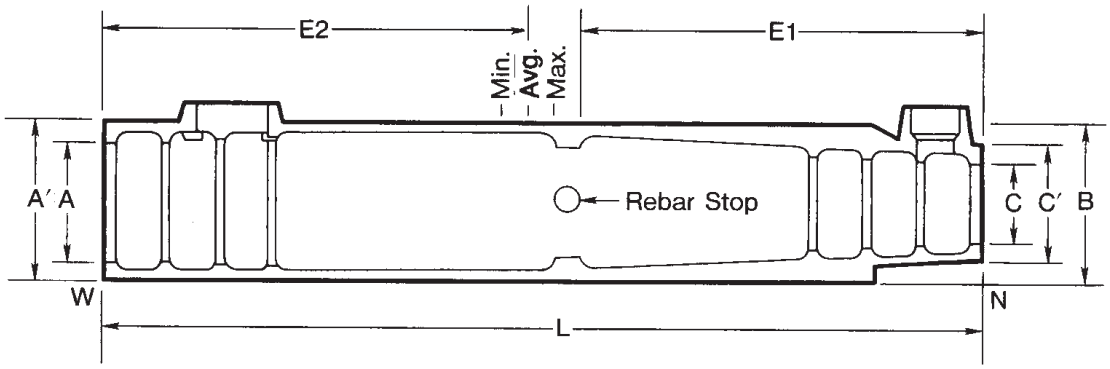

NOTES:

a) Standard size sleeves listed above are designed for use with bars with deformations conforming to ASTM requirements.

b) Rebar Stops (RS) are cast in all standard Model-X sleeves. Rebar Stop is designed to be broken out for some applications.

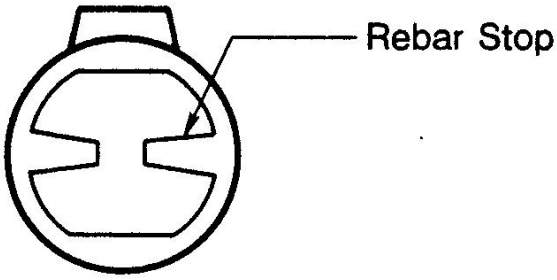

c) Setscrew: For temporary fastening of the bar in the narrow end of the sleeve, a small screw may be added by special order except 18 U.

d) For transition splices where different size bars are to be spliced, use the sleeve size for the larger bar of the pair. (See page III-18 for details)

e) PG (Post Grout) system sleeves may be converted to PRE (Pre-Grout) system by pressing the hole seals (HS) securely into the grout port holes in the side of the sleeve.

f) No welding of any kind is to be performed on the NMB Splice-Sleeve. Any welding to the sleeves will void all warranties.

g) The sleeve can be ordered epoxy coated,

h) Splice Sleeves cannot be hot-dip galvanized

i) Splice-Sleeves can be coated with zinc paint so long as the paint is only on the outside of the sleeve.

Table-2 LOCATIONS OF GROUT PORTS AND REBAR STOPS

Sleeve Size	F: Location of Rebar Stop	G: Location of Inlet Port	H: Location of Outlet Port
5U-X	4.33	1.85	0.83
6U-X	5.12	1.85	0.83
7U-X	5.91	1.85	0.83
8U-X	6.69	1.85	0.83
9U-X	7.57	1.85	0.83
10U-X	8.36	1.85	0.83
11U-X	9.15	1.85	0.83
SNX 11	9.49	1.85	1.06
A11W	9.49	1.85	1.06
14U-X	11.61	1.85	0.83
18U	N/A	2.65	0.67

FIG.-2

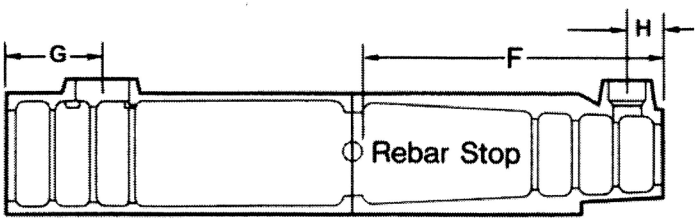

(3) FEATURES

The Model-X Splice-Sleeve is based upon a functional concept originally developed by Dr. Alfred A. Yee and patented worldwide.

An integral Rebar Stop near the center aids in determining the specified embedment length of rebar in each end of the sleeve.

Longitudinal ribs are cast on the outer surface of the narrow end of the sleeve for bar sizes from #7 to #14 in order to provide a constant outside dimension. (See Fig-3). As a result, uniform sizes of stirrups or column ties may be used over the length of the sleeves.

PVC grout inlet and outlet tubes may be cut to the same length for Model-X sleeve size.

The Model-X Sleeve has been tested by many independent laboratories and public agencies. It is accepted by major State Departments of Transportation.

In research sponsored by the National Cooperative Highway Research Program (Project No.10-35), it was reported that reinforcing bar splices made with NMB Splice-Sleeve Model-X were the only mechanical connections of those tested which were assigned to the highest performance category of fatigue resistance during 5 million cycles of repetitive tensile loading. This rating was given to both plain and epoxy-coated bars connected with the Model-X Sleeve.

FIG.-3

<u>7U-X thru 14U-X:</u>
Bar Sizes #7 thru #l4

<u>5U-X thru 6U-X:</u>
Bar Sizes #5 thru #6

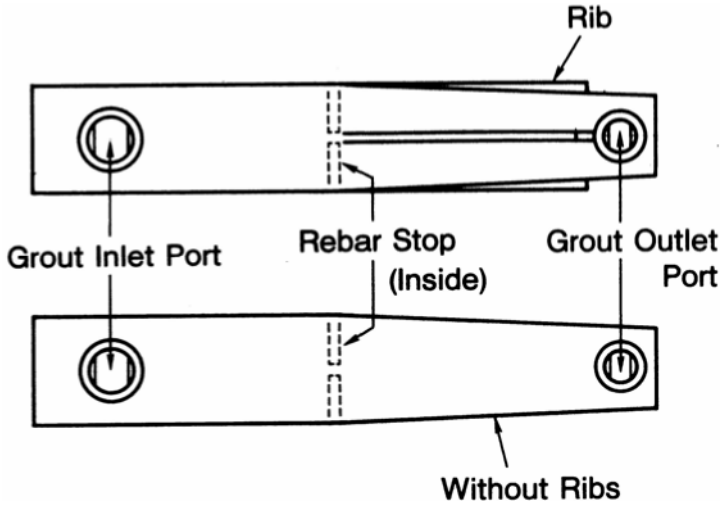

2) SS MORTAR®
(Grouting Material for NMB Splice-Sleeves)

(1) Description
GROUT CHARACTERISTICS
SS MORTAR®, the grouting material specified by code is a premixed formulation developed for specific use with the NMB Splice-Sleeve. It requires the highest degree of quality control and workmanship on the job and is subject to SPECIAL INSPECTION requirements in U.S. codes. It provides for the following special features:

Pot Life: Working time of the mixed grout is longer than ordinary grouts, facilitating grouting more sleeves from a single batch.

High Early Strength: Grout with flowable consistency should attain approximately 4,000 psi (28MPa) compressive strength in 24 hours at a normal temperature of 70° F (21°C) , facilitating higher erection efficiencies, See manufacturer's data sheet for more information.

High Ultimate Strength: The grout should attain a minimum of approximately 11,000psi (76MPa) compressive strength in 28 days under the above stated temperature conditions. **See manufacturer's data sheet.**

Flowability: The grout formulation provides the proper consistency and flowability for pumping or pouring in order to assure complete filling of all annular spaces in the sleeve.

Non-shrink: Bleeding, settlement shrinkage and drying shrinkage are eliminated by the chemical actions of special ingredients assuring that the sleeve spaces are maintained full of grout.

Stability: The grout is packaged in special bags in a pre-mixed ready-to-use formulation, requiring only the proper amount of water and mixing effort and time to assure a uniform mix of stable quality and specified performance.

Packaging:
Grout is packaged in moisture resistant bags. Grout has a bag life of 1 year.
Grout is available from manufacturers authorized to produce SS Mortar®. For names of authorized grout manufacturers, contact Splice Sleeve North America, Inc.

NOTES
NMB SPLICE-SLEEVES must be grouted with materials specified by code and research reports. NMB Splice-Sleeves are warranted to comply with the specifications and performance represented in this manual only.

The specified performance of the sleeve is also dependent upon the correct specification, mixing and installation of the sleeve grout. The supplier of the NMB Splice-Sleeve cannot be responsible for performance of or difficulties caused by the use of non-specified materials, improper grouting conditions or inferior workmanship not in accordance with the recommendations made herein nor by the grout manufacturer.

The use of any grout other than that specified herein or by code will void all warranties, expressed or otherwise implied, for the strength, safety, performance or any other characteristics of the NMB Splice-Sleeve connection as represented by this manual. The mixing, installing or use of SS MORTAR® in any manner other than that recommended by the grout manufacturer will likewise void all warranties.

The exact amount of water required to produce a grout mix of proper strength and consistency will depend upon air temperature and other job-site conditions, and should be determined in consultation with the grout manufacturer.

Under freezing or other adverse weather conditions, it will be the responsibility of the grouting contractor to take the proper precautions and to follow the recommendations of the grout manufacturer with respect to such conditions.

(2) Physical Properties
The approved manufacturer's technical data for SS MORTAR® are attached herewith for reference.

SS MORTAR® (GROUT) ENGINEERING DATA SHEET: SSM-J © 2011

SS Mortar® (Grout) manufactured by Splice Sleeve Japan, Ltd. is a special cementicious non-metallic filler grout developed for the NMB Splice-Sleeve® System. The use of any other grout will void all warranties, expressed or otherwise implied.

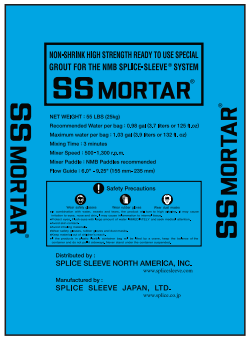

SS Mortar® (Grout) is packaged in 55-lbs (25-kg) moisture resistant bags. The required quantity of SS Mortar® shall be calculated from the table below.

High Early Strength: The grout in a flowable consistency will attain above **4,000-psi** in less than **24 hr**. at a temperature of 68°F (20°C). Rapid strength gain allows erection to continue.

High Ultimate Strength: The grout attains **14,000-psi** compressive strength in 28 days at 68°F (20°C).

SS Mortar® is a ready-to-use formulation requiring only the proper amount of water, which is suggested at 0.98 gal. = 125 fl. oz. = 3.7 liters per bag. The maximum water is 1.03 gal. = 132 fl. oz. = 3.9 liters.

Mixing time is a minimum of two and a half **(2½) minutes** with electric mixer of 500 to 1,300 rpm.

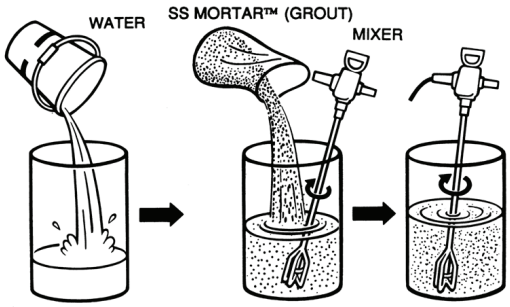

Required quantity of SS Mortar® for NMB Splice-Sleeve®

REBAR Size		Splice-Sleeve	SS Mortar	
U.S.	Metric	Model	lb/sleeve	Sleeves/Bag
#5	16mm	5U-X	1.26	43
#6	20mm	6U-X	1.76	31
#7	22mm	7U-X	2.65	20
#8	25mm	8U-X	3.46	15
#9	28mm	9U-X	3.95	13
#10	32mm	10U-X	4.94	11
#11	35mm	11U-X	6.02	9
#11	35mm	SNX-11	5.71	9
#11	35mm	A11W	6.99	7
#14	40mm	14U-X	9.19	5
#18	57mm	18U	25.31	2

Grout quantities shown in the table are in dry powder weight of the grout to fill the space inside the sleeve after both rebars have been inserted into the sleeve. From experience, additional overage is included to provide for minimum grout tubes, waste and loss in the field.

Always mix full bags: no partial bags. The above overage does not cover large amounts of "left over" waste from the bucket, pump, hose and elsewhere. For small jobs or many separate grouting sessions, it is recommended you consider additional grout (typically 10% to 25%). It is better to have a bit too much than a bit too little and delay the job.

Nissco SS Mortar should be stored in moderate/cool and dry conditions. It has a "freshness" bag life of one (1) year. Bags have a date stamp on the top using letters for the year then month then numbers for the day (See chart below and pictures & examples right)

Year	01	02	03	04	05	06	07	08	09	10		
	A	B	C	D	E	F	G	H	I	J		
Month	1	2	3	4	5	6	7	8	9	10	11	12
	A	B	C	D	E	F	G	H	I	J	K	L
Day	As a number from 1 to 31											

HF 23 = 08 - 06 - 23 = 23rd June 2008

JK 30 = 10 - 11 - 30 = 30th November 2010

AI 21 = 01 - 09 - 21 = 21st September 2011

©2008 SPLICE SLEEVE NORTH AMERICA, INC.

SS Mortar® (Grout) Performance Data

Nissco SS Mortar® (Grout) - Fresh Mortar Test Results

Water volume	Mix Temp	Curing Temp	Set Time Hr-Min Initial	Set Time Hr-Min Final	Flow Guide	Bleeding %
0.98 gal	**68°F**	**41°F** (5°C)	**9hr 31min**	**13hr 35min**	6 1/4" (160mm)	0.0%
3.7 liters	20°C	**68°F** (20°C)	**4hr 18min**	**5hr 55min**	6 5/8" (170mm)	0.0%
		86°F (30°C)	**2hr 23min**	**3hr 20min**	6 1/2" (165mm)	0.0%

Nonmetallic, Nissco SS Mortar must be used in when the **surrounding concrete and the sleeve temperature is between 35°F to 140°F (2°C to 60°C).** Freezing grout before it is above 1,500 psi will deplete strength. The grout should be **mixed and pumped between 50°F and 95°F (10°C to 35°C)**. In extreme temperatures warm or iced water can be added to adjust mortar temperature. Per the table below, strength gain is related to temperature thus freezing/very cold conditions may require a heating plan until connection strength is reached allowing continued erection and structural specifications. (See Splice Sleeve User's Manual and/or call Splice Sleeve directly).

Nissco SS Mortar® (Grout) - Compressive Strength Time vs Temperature

Curing Temp	Compressive Strength (psi) 12 hr	18 hr	1 day	3 days	7 days	28 days
41°F	---	583	1,465	6,117	8,193	12,518
68°F	810	2,930	4,424	8,008	10,313	14,538
86°F	2,688	5,220	7,112	9,929	11,479	14,609

Consistency Flow tests are run using a "Flow Guide". The diameter of the "puddle" should be between 155mm (6") minimum to 235mm (9 ¼") maximum. The Flow Guide consists of a 2 in. (50mm) diameter x 4 in. (100 mm) cylinder placed in the center of a level, smooth, non-absorbent surface. After filling and lifting the cylinder, the diameter of the resulting puddle of grout is measured. Details of the procedure are described in Engineering Data Sheet GROUTPRO: "Recommended Procedure for Field Sampling and Testing SS Mortar®".

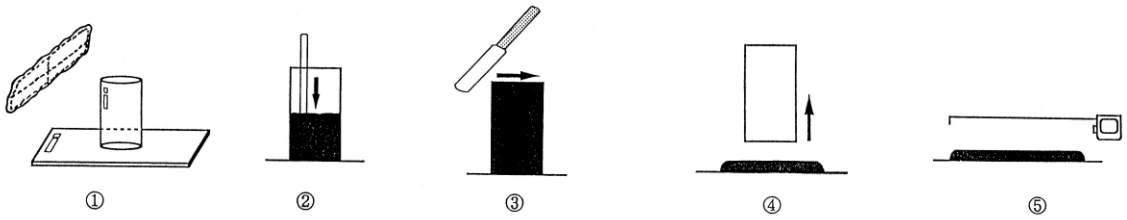

Related documents:

- Material Safety Data Sheet: SS Mortar®
- Users' Manual for NMB Splice-Sleeve® System
- GROUTPRO-N1: Recommended Procedure for Field Sampling & Testing SS Mortar®
- Splice Sleeve "Grout Operation" slideshow

©2008 SPLICE SLEEVE NORTH AMERICA, INC.

GROUTPRO-N1: Recommended Procedure for Field Sampling and Testing SSNA SS Mortar®

（1） General

The only grout to be used in the NMB Splice-Sleeve® is called SS Mortar®. This document provides instructions for quality assurance of non-metallic SS Mortar® provided by Splice Sleeve North America. Measurement of consistency of the grout is necessary in order to determine and maintain the proper amount of mixing water to assure a smooth pumpable grout matrix. Compressive strength of the grout is one of the main factors in determining the performance of the NMB Splice-Sleeve®.

（2） Consistency test

Testing tools: PVC pipe of 2" inside diameter and 4" high, a smooth non-absorptive surface (plastic) square plate of 10" or larger, tape measure, trowel, cloth and steel rod. Any smooth non-absorbent flat surface or table may be used if the plastic plate is not available.

Testing procedure:

1) Clean PVC pipe and the plate with wet cloth. Place the pipe on the center of the plate. Check for good fit to plate with no seepage.
2) Pour mixed grout into PVC pipe in two layers, each layer being tamped 10 times with steel rod.
3) Remove excess grout with trowel and level the surface. Clean spilled grout on the plate with cloth.
4) Lift the pipe slowly and vertically until all the grout has run out.
5) The diameter of the resulting puddle of grout is then measured in two directions(at right angles) and the average diameter is the consistency measurement. This consistency measurement should be recorded. The consistency measurement should fall in the range of 6" to 9.25".

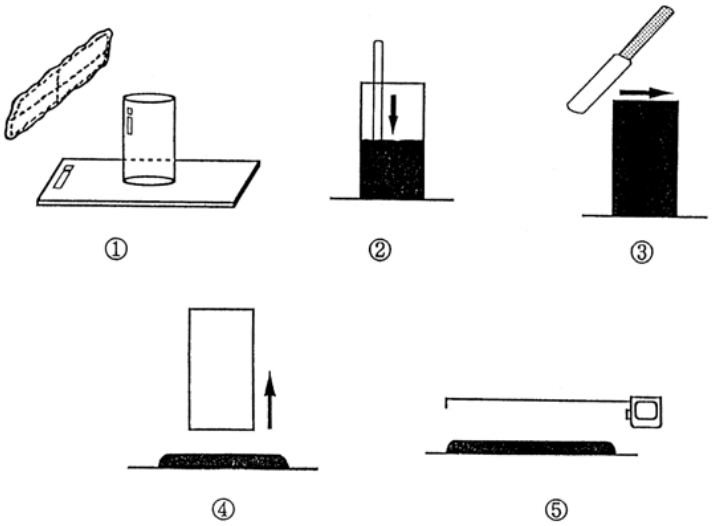

（3） Preparation, storage, curing and testing of field specimens for compressive strength

A. Preparation, storage and curing

Tools: a 3-gang cube ***steel or brass*** mold (plastic or thin aluminum mold is not acceptable), Tamper of 1/2" x 1" cross section, a wooden hammer, cloth and curing box

Procedure:

1) Grout is poured into the mold in two equal layers, each layer being tamped eight (8) times with the tamper and compacted by tapping the sides of the mold several times with a wooden hammer.
2) Remove excess grout with trowel and clean top edge of mold very carefully.
3) Cover the molds with a heavy plate and wet cloth, then place the specimens undisturbed for at least 24 hours in a curing box.

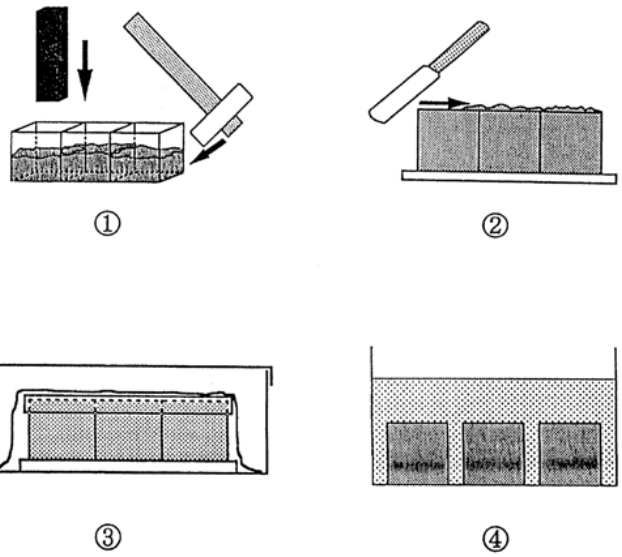

4) Strip the cubes following day, mark to identify on top trowel surface and cure them in lime water for 28 days or until tested.

B. Testing the specimens

Specimens should be located in the exact center of the loading plates during loading in testing cube specimens for compressive strength in order to avoid significant errors. Do not load top (troweled) surface. Turn cube on side.

The calculation of average strength should be based on the average of two cube tests made from the same sample of grout. In the event there is a wide deviation in results between the tests of two specimens, a third cube specimen of the same age will be tested, and the strength shall be considered as the average of the two closest results.

Reference: ASTM C109 [Standard Test Method for Compressive Strength of Hydraulic Cement Mortars (Using 2 inch or 50 mm Cube Specimen)]
ASTM 942 Standard Test Method for Compressive Strength of Grouts for Preplaced-Aggregate Concrete in the Laboratory

MATERIAL SAFETY DATA SHEET

【1. MANUFACTURER INFORMATION】

Name of Company : SPLICE SLEEVE JAPAN, LTD.

Address: 17-1 Nihonbashi Hakozaki-Cho, Chuo-Ku, Tokyo 103-0015, JAPAN

Section in Charge: Technical Section, Engineering Dept.

Telephone Number : 03 (5642) 6120 FAX Number : 03 (5642) 6150

Data Sheet Code NO. 1 PRINTED: February 1, 2006 (for address revision)

【2. PRODUCT NAME】 SS MORTAR®

【3. PRODUCT SPECIFICATION】

Distinction-Unitary Product or Mixed Product: Mixed Product

Type: Pre-Mixed Dry Mortar(Cement Grout Material)

Name of Major Minerals Composition: Fine Grain Minerals (Aggregate)

Chemical Name/Formula and Specification: Portland Cement

Formula: 3CaO SiO2,2CaO SiO2,3CaO Al2O3, 4CaO Al2O3 Fe2O3,CaSO4 2H2O

Specification: JIS R 5210, Portland Cement

Calcium Sulfa Aluminate, Formula: 3CaO 3Al2O3 CaSO4

Non-Crystalloid Silica, Formula: SiO2

Other Additives : Admixtures (Organic Materials)

UN. Classification and Number: Not Classified as Hazardous Material and No Number Specified.

【4. CLASSIFICATION FOR HAZARDOUS NUISANCE】

Classification Name : Not classified in guideline for indicating hazardous nuisance of chemical materials.

Hazard Data : Nonflammable. Not dangerous material for normal handling.

Nuisance: In combination with water, It causes Calcium Hydroxide. Its Alkalinity (pH12 − 13) may cause irritation to eyes, nose and skin.It may cause inflammation to cornea and internal tissue of nose. It irritates throat if swallowed.

【5. FIRST AID】

Eyes: Flush eyes with large quantities of pure water IMMEDIATELY and seek medical attention.

Skin: Wash skin with soap and water IMMEDIATELY. If necessary, seek medical attention.

Inhalation: Move to fresh air IMMEDIATELY and gargle with cold or warm water. Seek medical attention.

Ingestion: Drink large quantities of water and induce vomiting. Seek medical attention.

【6. FIRE DATA】

Extinguishing Media : Nonflammable Material and it does not have a flash point.

Extinguishing Agent: Not necessary due to nonflammable material.

【7. SPILLS DATA】

Action: If material is spilled or leaked on floor, clean it by vacuum, shovel or broom and return to bags. Wash material on floor with water. Drain waste water in accordance with local regulations after neutralization and/or dilution treatment. In case the spills are large quantities, wear suitable clothing, dust masks, rubber gloves, boots and safety glasses.

【8. HANDLING AND STORAGE DATA】

Handling: For eye protection, use suitable safety glasses. Avoid direct skin contact for prolonged periods and repeated uses. Wear suitable protective equipment such as working clothes, gloves, boots, and etc. Avoid inhaling material. If ventilation is not sufficient, wear suitable dust mask. After handling, wash hands, face, and other exposed areas. Wash contaminated clothing before reuse. Do not handle mortar bags roughly. Rough handling may tear bag.

Storage : Do not keep materials in wet places. Keep from moisture.

【9. PREVENTING CONTAMINATION】

Facilities: Use ventilation equipment and dust collectors where facilities are confined spaces or rooms.

Protection equipment: Use dust mask, safety glasses, gloves and suitable working clothes depending on situation.

【10. PHYSICAL AND CHEMICAL CHARACTERISTICS】

External appearance: Gray powder, Odorless *Boiling point :* Not applicable

Melting point : Approx. 1,350 ˚ C. *Gravity :* 2.98 (20 ˚ C). *Solubility:* Insoluble in water

Volatility: None *Others:* Explosiveness; None Hydraulic: Reacts by exposure to water by hardening.

【11.HAZARDOUS DATA (STABILITY) (REACTIVITY)】

Flash point: None (Nonflammable) *Explosion limits:* None

Inflammability: Nonflammable. *Combustibility:* None *Oxdizability :* None

Self-Reactivity/Explosiveness : None *Dust explosiveness:* None

Stability/Reactivity: Gradual efflorescence by reacting to moisture(water) in air

【12.NUISANCE DATA】

In combination with water, it causes hydroxide. Its alkalinity(Ph12-13) may cause irritation to eyes, nose and skin. Prolonged dermal contacts to material may cause rough skin or inflammation. Repeated inhalation over extended period may result in pneumoconiosis.

【13.ENVIRONMENTAL INFLUENCE INFORMATION】

No reportable data to ecology influence. Waste water used for mixing will have alkalinity (pH12-13). Dispose in accordance with local regulations.

【14.WASTE DISPOSAL METHOD】

Dust(Material): Dispose in accordance with local regulations..

Cured material: Dispose in accordance with local regulations.

Waste water : Dispose in accordance with local regulations.

【15.TRANSPORTATION METHOD】

Avoid tearing and scratching of package. Avoid leakage from container and keep from loose bundling, moisture and water.

【16. REGULATORY INFORMATION】

Follow local regulations for waste disposal, treatment and cleaning. Labor safety and sanitation law (Anti-dust prevention law) for pneumoconiosis.

【17.OTHERS】

The information herein is given in good faith. No warranty, expressed or implied is given regarding the accuracy of this data or the results obtained from the use thereof. Special attention is to be given so as not to use the material in an irregular way not covered by the manufacturer's instruction manual.

3) ACCESSORIES, TOOLS, EQUIPMENT AND OTHER MATERIALS

Accessories, tools, equipment and other materials required during plant operation, erection and grouting are as below Table-4:

	Plant Operation	Erection	Grouting
Post-Grout System (PG)	End Caps Sleeve Setters Inlet/Outlet Tubes Hole Seals	Washer Coil Springs	Mixer and Paddle Grout Pump Stoppers
Pre-Grout System (PRE)	End Caps Sleeve Setters Hole Seals	————	Mixer and Paddle Pouring cup Rod to remove air

FOR PLANT OPERATION

(1) End Cap plug (RP, CP, EP, PP)

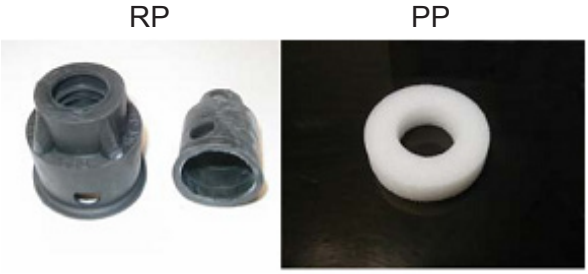

This is a plug made of rubber or polyethylene foam used to prevent the intrusion of mortar or cement paste into the sleeve. The End Cap rubber plug (RP) is used for sleeve sizes #5-#14. The Polyethylene Plug (PP) is used for sealing sleeve size #18. The rebar size of the number is marked on the surface of each plug.

(2) SLEEVE SETTER, CAM TYPE (STR-CT)

This is a patented tool used to secure the sleeve in position in the mold. The sleeve setter is composed of a metal shaft with a cam, nut, and replaceable setter rubber (SR) and setter washer (SW).
The sleeve setter size is marked on the surface of the replaceable parts, setter rubber (SR) and setter washer (SW) which are sized according to the sleeve number.

A metal bushing (BS) is used for sizes #5-#18.
Calculate the required quantity of sleeve setters by counting the number of sleeves for each precast mold.

Experience has shown that a sleeve setter may be re-used at least 100 times. Setter rubbers (SR) deteriorate with use, and generally will last for about 15 to 30 re-uses at curing temperatures of not greater than 80°C (175°F). Accordingly, extra setter rubbers may be needed to accommodate the number of molds and the number of times the molds will be used. It is also wise to purchase several spare sets of STR-CT to allow for emergencies.

(3) INLET AND OUTLET TUBES (PVC)

In the Post-grout system, grout will be pumped into the sleeve through the grout Inlet Tube until it comes out of the Outlet Tube. Use 22mm ID (26mm OD) metric PVC pipe for the Inlet Tubes, and 14mm ID (18mm OD) pipe for the Outlet Tubes. Metric PVC pipe is available from SSNA. In normal practice, rigid PVC pipe is recommended for both Inlet and Outlet Tubes.

Adaptors are available which will permit the use of local purchase American Standard PVC.
Contact SSNA for source.

(4) HOLE SEALS (HS)

Hole Seals (HS) are plastic plugs which temporarily plug the grout inlet and outlet tubes in PG applications and prevent the intrusion of concrete into the sleeves during casting. The seals are also used to plug the grout ports in the sleeves in the PRE application.

Special Recessed Hole Seals (RHS) are available for applications where it is desired to set the ends of the grout tubes back short of the face of the finished concrete. Contact SSNA for source.

FOR ERECTION

(5) WASHER (GRW)

These are metal washers fitted with a rubber seal to prevent the intrusion of bedding mortar into the sleeve or to prevent leakage of SS MORTAR® out of the sleeve, depending upon application. The rebar size is marked on the surface of each washer.

(6) COIL SPRING (CS)

Coil spring may be used to push up the GRW to the bottom wide end opening of the Splice-Sleeve to prevent intrusion of bedding mortar or dry-pack material into the chamber of Splice-Sleeve.

FOR GROUTING

(7) MIXER

For mixing a small or moderate quantity of grout, use a portable electric drill operating at a drill speed range of 400-600 rpm, and a mixing paddle recommended by the grout manufacturer.

For mixing a large quantity of a grout or mortar, a powered mixer may be used. Some powered pumps incorporate integral mixers. Contact the sleeve or grout manufacturer for names of manufacturers of combined powered mixer/pumps.

(8) GROUT PUMP

For pumping a small or moderate quantity of grout in bag size batches, a hand operated grout or mortar pump may be used.

For pumping large quantities of grout such as multiple bag batches, powered combination pumps and mixers are available.

Detail of a field-fabricated pump nozzle is shown below: **(FIG-4 Nozzle)**

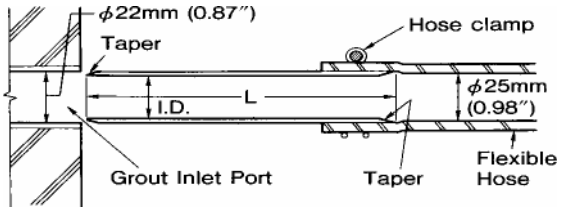

CAUTION: Bevel taper the inside diameter of the tube at the hose end in order to avoid a sharp transition in hose diameter which might cause jamming of the grout.

(9) STOPPERS

Rubber stoppers are used to plug the inlet and outlet ports immediately after the sleeves have been filled with grout. These are usually available locally, but may also be purchased from the manufacturer. Contact SSNA for source.

II. ENGINEERING NOTES

This section is a reference for those designers who specify NMB Splice-Sleeves.

1. **Emulation Design:** A practical guide for detailing precast concrete structures by emulating cast-in-place reinforced concrete design is available from the American Concrete Institute, ACI 550-1R-09 report. This helps engineers to detail precast concrete structures using mechanical rebar splices to achieve monolithic moment-resistant connections.

Splice Sleeve North America, Inc. (SSNA) provides Engineering Data Sheets (EDS) to give engineers various application ideas for NMB Splice-Sleeves. EDS are listed on the last page of this manual and available by contacting SSNA.

2. **Code Reference: Building code requirements for mechanical reinforcing bar connection: ACI 318-11, UBC-97 Type 1 & 2**
(and the required grout strength to attain it for Grade 60 rebar 615 & 706 specified yield 60 ksi specified ultimate 90 ksi)

Type 1=minimum 125% of specified yield point of rebar

Type 2= minimum 150% of specified yield point of rebar per ACI 318-11
...or minimum 160% of specified yield point of rebar per UBC-97 (11,000 PSI)

Note: Type 2 must be specified if the splice is within the plastic hinge region of a joint in a moderate to high seismic region. Please see codes for definition of seismic regions where Type 2 is required.

3. **How to specify NMB Splice-Sleeves:**

SPECIFIC: Show sleeve size and grouting system.
Examples: NMB Splice-Sleeve 8U-X(PG), 11U-X(PRE)
from Splice Sleeve North America, Inc., Livonia, Michigan.

GENERIC: Mechanical rebar splices by means of grout-filled steel sleeves with frusto-conical geometry into which a non-shrink, high strength grout is introduced using a low pressure pump, the splice to meet the TYPE 1 or 2 requirements of ER –5645, NER-217 and ACI 318.

AASHTO:
The NMB Splice-Sleeve exceeds the requirements (min. 125%fy) of the AASHTO Standard Specification for Highway Bridges, Division I– Design, Section 8.32.2 including the new Article 8.32.2.5 in the 16th Edition. This article sets down requirements for fatigue design of mechanical connections. The NMB is listed generically as the “Grout-filled sleeve (without threaded ends), with or without epoxy coated rebar”, which is the only coupler to achieve the 18-ksi stress category in the NCHRP 10-35, 5 million cycle tests.

Designer should determine the fatigue stress range caused by live loads plus impact at service load. The stress range is the difference between the maximum tensile stress and a minimum stress in the reinforcing bar at the splice location. Then, determine which categories or splice groups have fatigue limits greater than the fatigue stress range and select the splice coupler. The NMB provides the highest stress range limit at 18-ksi. If the value is higher, bars cannot be spliced and continuous rebar must be used at the location in question.

4. Remarks for designing with NMB Splice-Sleeves:

Selection of Sleeve Size: For splicing bars of the same size, select the corresponding sleeve size with the same number as the bar size (e.g. 8U-X for #8 or 25M bar).

For “Transition Splicing” different size bar combination, select a sleeve size corresponding to the larger bar size (e.g. 9U-X for #8 and #9 bar combination).

For giving more erection tolerance at foundation level connection, it is recommended to select two size larger sleeve than the size of foundation dowels. (e.g. 11U-X for #9 bar)

Spacing: Minimum spacing between NMB Splice-Sleeves is either the maximum aggregate size of the design or 1 inch, whichever larger as stipulated in ACI 318. If sleeves are in multiple rows and grout tubes must get passed the row in front, then more space will be necessary (depending on the angle of the tube going past).

Concrete Cover: Distance for required concrete cover must be maintained from the concrete surface to either surface of the sleeve or of the stirrup bar over the sleeve depending on code requirements for intended service or exposure to weather.

Bar Embedment: Refer to the dimension table (Table-1) in page Section I-8

Factory Dowel (the bar inserted in the factory in the narrow end) shall be designed as close to maximum specified length so as to reach the Bar Stop.

Field Dowel (the bar inserted in the field during erecting in the wide end) shall be designed with consideration of field gap and tolerance. (See page Section III-3 for determining bar length.)

AutoCAD drawings of NMB Splice-Sleeves on CD-ROM are available upon request.

Epoxy and Galvanized Rebar - Epoxy and Zinc Paint Coating:
The NMB Splice-Sleeve may be used to connect epoxy coated rebar. The epoxy coating on the bar embedded in the sleeve does not have to be removed. The sleeve can be ordered epoxy coated so as to be compatible with the coated rebar. If it is necessary to connect galvanized rebar, the NMB can be epoxy coated inside and out or cold zinc painted outside only. The **NMB Splice-Sleeve should not be hot-dip galvanized.**

III. PLANT OPERATIONS

CONTENTS

(MANUFACTURING PROCESS)

Preparation of Mold

↓

Preparation of Reinforcing Bars

↓

Assembly of Mold

Rebar Installation

↓

Placement of Concrete

↓

Curing Concrete

↓

Stripping Concrete Members

↓

Inspection

(NMB SPLICE SLEEVE APPLICATION PROCESS)

1. HOLES FOR SLEEVE SETTERS, PROTRUDING BARS ON MOLD, AND BAR CLAMPS III-2

2. DETERMINING THE LENGTH OF REINFORCING BARS III-3

3. FITTING ACCESSORIES TO SPLICE SLEEVES
   - 3-1. FITTING RUBBER PLUGS ON SLEEVES III-4
   - 3-2. GROUT INLET AND OUTLET TUBES III-5
     - 1) MATERIALS AND DIMENSIONS III-5
     - 2) INSTALLING INLET AND OUTLET TUBES III-5
     - 3) SEALING THE END OF THE GROUT TUBES III-7
     - 4) HOW TO DETERMINE THE LENGTH OF THE PVC TUBES III-8
     - 5) EXAMPLES OF GROUT TUBES III-9

4. HOW TO INSTALL SPLICE SLEEVES IN THE MOLD III-10
   - 4-1. INSTALLING SLEEVES WITH CAM TYPE SLEEVE SETTER III-10
   - 4-2. SECURING REINFORCING BARS III-12
   - 4-3. METHOD FOR INSTALLING POLYETHYLENE PLUG III-15

5. INSPECTION PRIOR TO POURING CONCRETE III-16

6. PRECAUTIONS DURING CONCRETE POURING III-17

7. LOOSENING THE CAM OF SLEEVE SETTERS III-17

8 REMOVING SLEEVE SETTERS III-17

9. INSPECTION OF PRECAST MEMBERS III-17

10. PRECAUTION DURING STORAGE AND TRANSPORTATION III-17

REFERENCES:
- 1) TRANSITION SPLICES III-18
- 2) HORIZONTAL SYSTEM III-20

1. HOLES FOR SLEEVE SETTERS, PROTRUDING BARS ON MOLD, AND BAR CLAMPS

Drill holes of 5/8 inch in diameter on the mold for installing Sleeve Setters (STR-CT model).

See Page III-10 for installation. Also drill holes of the appropriate diameter on the opposite side of the molds for the protruding bars.
See page III-12 for suggested ways of securing reinforcing bars.

FIG.-6
Section of Precast Member before Pouring Concrete

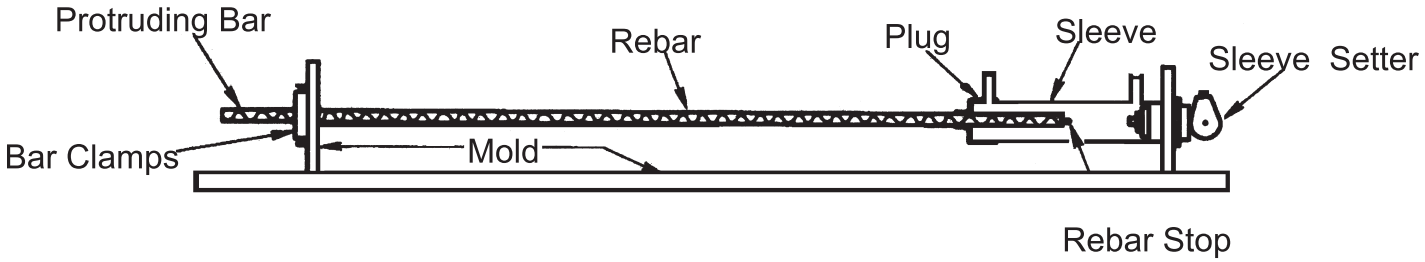

FIG.-7
Section of Precast Member after Pouring Concrete

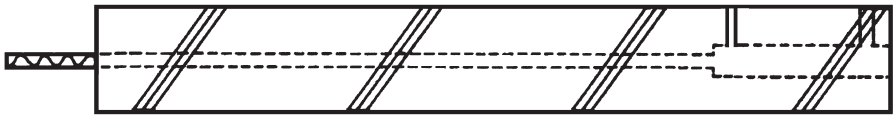

2. DETERMINING THE LENGTH OF REINFORCING BARS

FIG.-8 & 9

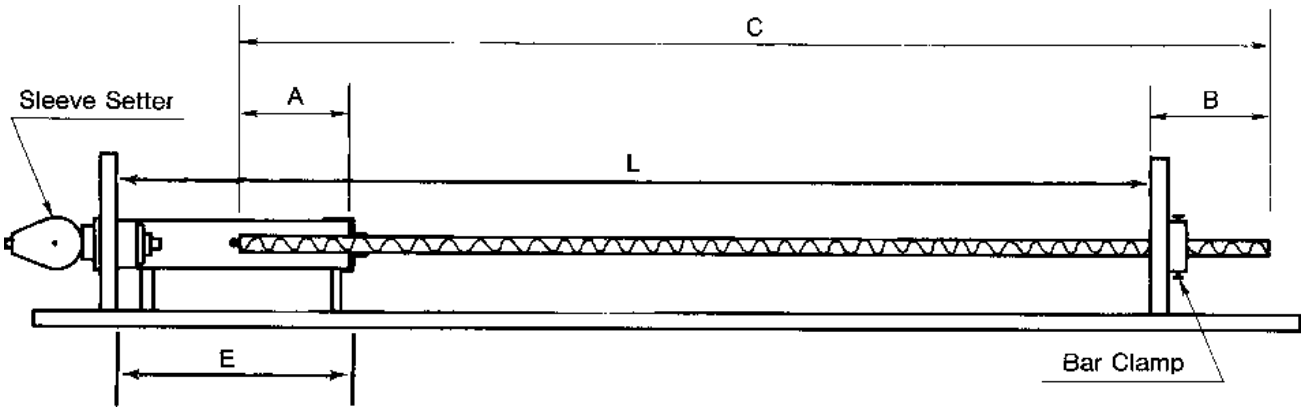

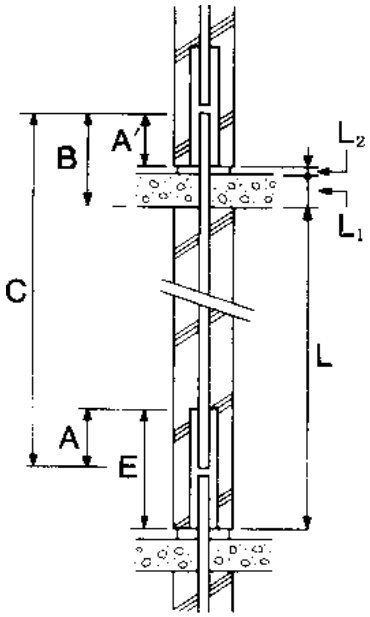

Protruding Bar Length : B

$$B=A'+L_2+L_1+x$$

Required Length of Reinforcing Bar : C

$$C=L-E+A+B+y$$

A, A' : Embedment Bar Length
L_2 : Design Depth of Joint Gap
L_1 : Design Depth of Floor Slab
L : Design Height of Precast Unit
E : Sleeve length.
x : Design Tolerance (See Page I-8 Table-1, E-2 Average)
y : Cutting Error

NOTE: It is essential that the reinforcing bars be cut accurately to the specified tolerance. It is necessary to set a bar stop on the bar cutting machine and to make certain the bar is tightly against the stop before cutting. The bar fabricator should be cautioned that tolerances used for cutting bars for use in cast-in-place concrete are not acceptable for use with this type of connection. Cutting tolerance should be limited to not more than ±1/8 inch for a total of 1/4 inch. Short bars should not be accepted.

3. FITTING ACCESSORIES TO SPLICE SLEEVES

3-1. FITTING END CAP PLUGS ON SLEEVES

Molded End Cap rubber plugs are used for sleeve sizes 5 through 14. At the present time, polyethylene plugs are used with #18 sleeves.

Methods for installing the End Caps are demonstrated below.

Polyethylene plugs with plastic tape are used for sleeve size #18. For installing the polyethylene plugs, refer to III-15.

HOW TO INSTALL END CAPS ON SLEEVES **FIG-10**

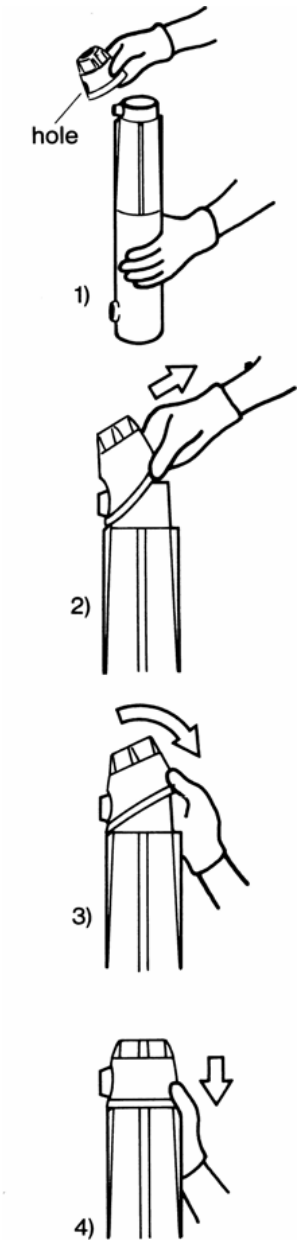

l) Firmly hold the sleeve in an upright position and slip the side hole of the End Cap over the grout outlet projection of the sleeve. Hold in place with thumb just above grout port.

2) Pull the End Cap slant-ways over the narrow end of the sleeve.

3) Pull the cap downwards to cover the end of the sleeve.

4) Stretch the cap down firmly so that the plug fits evenly around the entire end of the sleeve and covers the raised ring in the sleeve.

3-2. GROUT INLET AND OUTLET TUBES

1) Materials and Dimensions

In the Post-Grout System, grout will be pumped into the sleeves through the grout inlet tube until it comes out of the outlet tube.

(1) The grout ports are sized to receive tubes made from metric PVC pipe. This is available from Splice Sleeve North America. British Standard metric PVC sizes will not fit the grout ports. The use of an adaptor may be considered in order to permit the use of American standard ASTM Schedule 40 PVC pipe sizes. Tubing sizes are as follows:

PORT	METRIC	US (WITH ADAPTOR)
Inlet	22mm	3/4 inch
Outlet	14mm	1/2 inch

(1) In normal practice, rigid straight PVC pipe is recommended for both inlet and outlet tubes.

(2) In special applications, flexible grout tubes have also been used. Care must be taken to assure that the flexible tubes do not become kinked or collapse during casting. The user is cautioned that such tubing will be difficult to clear in the event an obstruction lodges in the tubing.

When flexible tubing is used, special care must be taken to tie and seal the tubes securely into the sleeves. The other end of the tubing also needs to be secured to the form unless it protrudes from the top of the mold.

(3) When rigid tubing is used, the lengths of the grout tubes will depend upon the required applications. Refer to Figure 11.

FIG.-11

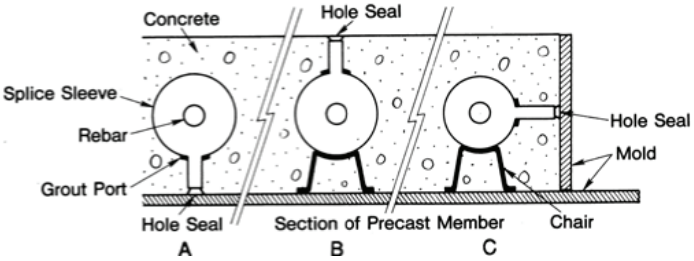

POSITIONS A & C: Tube ends at form surface:

The ends of the grout tubes should be made flush with the mold. Hole Seals (HS) should be used in all cases.

In some cases, where it is desired to offset the tubing from the face of the formed concrete for cosmetic or other reasons, a rubber stopper can be used instead of the Hole Seal (HS). In this case, the size of the rubber stopper should be such that when it is inserted half-way into the grout tube, a tight seal is assured. Special Recessed Hole Seals (RHS) are also available for this purpose.

POSITION B: Tube ends adjacent to the finished concrete surface:

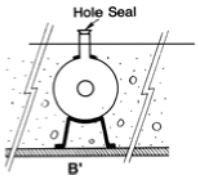

When the tubes are installed in a position with the end oriented to the finished concrete, care must be taken to secure the tubes in a fixed position, and the sleeves should be supported with chairs assure that the tube ends will not be lost below the concrete surface during casting.

Grout tubes may be depressed slightly below the finished concrete surface so that finishing operations can pass over the tubes. In this case, fill the Hole Seals (HS) with grease or oil-based glaziers putty so that they can be located later.

In some applications, where a smooth finish is not required, the tubes are extended above the finished concrete surface. Hole Seals should still be used to cap the ends of the tubes.

2) INSTALLING INLET AND OUTLET TUBES

The grout tubes must be firm and tight in order to prevent intrusion of cement paste during casting operations. Tubes should be tied off firmly to rebars, sleeves, etc., so as not to be disturbed nor displaced during concrete placement.

(1) The tubes should be located so as to minimize the length. The outlet locations should be chosen so as to assure that the tubes will not be made inaccessible by the installation of subsequent precast concrete members.

(2) There are two commonly used methods of securing the grout tubes to the sleeve ports:

a) The end of the tube is wrapped one or more times as necessary with electricians tape. The wrap extends about 1/6 inch over the end of the tube. The tube is then tamped into the grout port until is fully inserted, using a wooden mallet or other means to avoid shattering the plastic pipe. The tube should be tested for security by manually trying to pull it out. If it can be pulled out by hand, an additional wrap of tape is used and the process is repeated. This method permits immediate installation of the sleeve assembly and the placing of concrete without delay. This method will not work well with flexible tubing.

b) The end of the rigid or flexible tubing is coated with a type of cement recommended by the tubing manufacturer. The tube is then fully inserted into the sleeve port and the cement is allowed to set. To determine the length of time necessary to assure that the tube will not be dislodged, the hand pull test described in a) above is applied. In some cases, the time will vary with ambient temperature.

(3) When using flexible grout tubes, it is recommended that the tubes be secured against coming loose by using tie wire at each end to securely fasten them both at the sleeve ends and at the grouting ends.

(4) As the general rule, grout tubes should be located at right angles to the molds, or to the concrete surfaces. In some cases, as shown in Fig.-21 on page III-9, this may not be possible. The tubes may be cut on a bevel parallel to the form face. If the bevel cut is elected, the hole seals provided cannot be inserted. The use of tight-fitting backer rod has been used with tape to seal the tubes.

FIG.-12

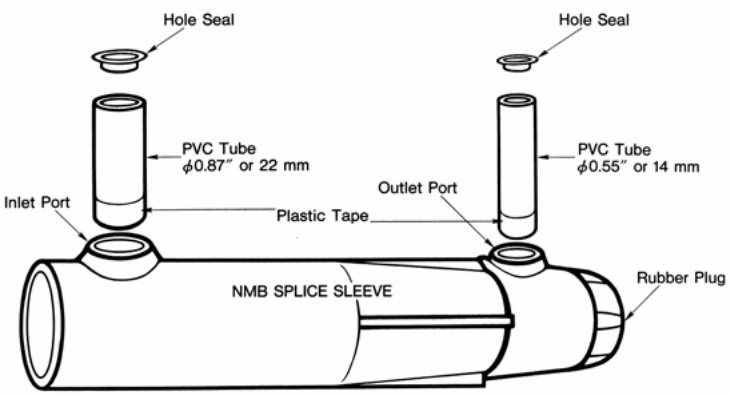

Coating adhesive to at least 0.4" (10 mm) length around the end of tube
Setting tubes in sleeves

REMARKS:
Plastic or electrical tape may be used with, or instead of, cement to secure the grout tubes in the sleeve grout ports. If the fit of the PVC pipe is too loose in the grout port, one or more wraps of tape can be used to tighten the fit.

As indicated below, plastic tape may be used instead of cement. Normally only a single wrap of tape is required.

FIG.-13
Winding tape around the end of the tube
Adhesive may be applied on the tape for better bonding
Fit the tube firmly into the hole.

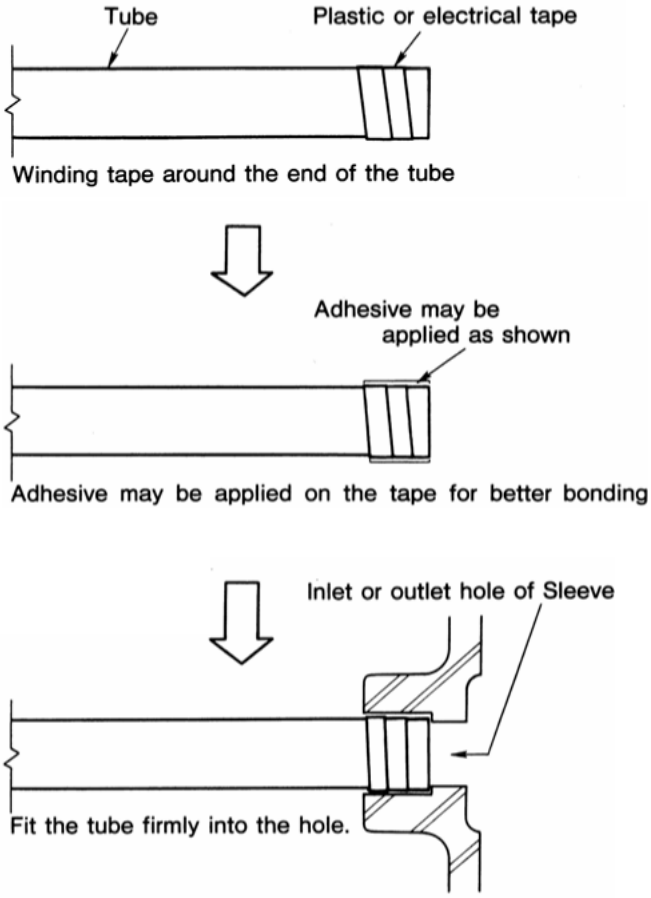

3) SEALING THE END OF THE GROUT TUBES

After setting the grout tubes, the ends should be sealed with Hole Seals (HS) so as to prevent intrusion of concrete or mortar into the tubes during placement of concrete.
Glazier's putty (oil based) or heavy grease should be used to fill the recess of the Hole Seal. This will facilitate locating the grout tube ends later when the oil bleeds through the concrete.

FIG-14 (Setting in mold)

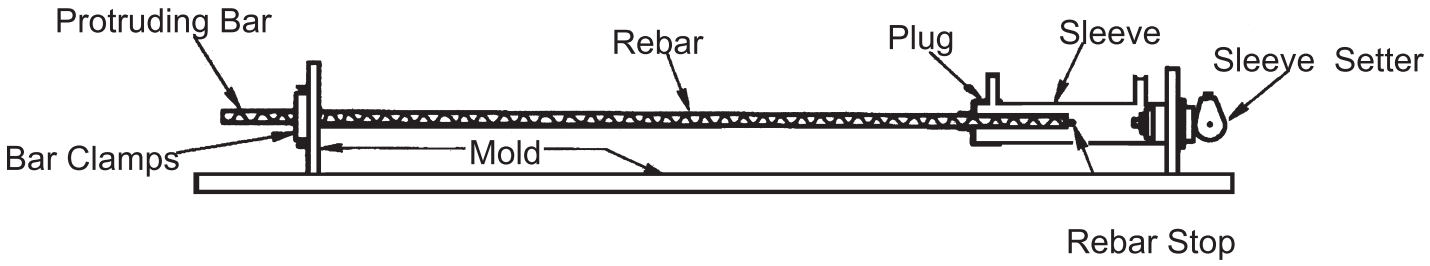

FIG-15 (Glazier's putty)

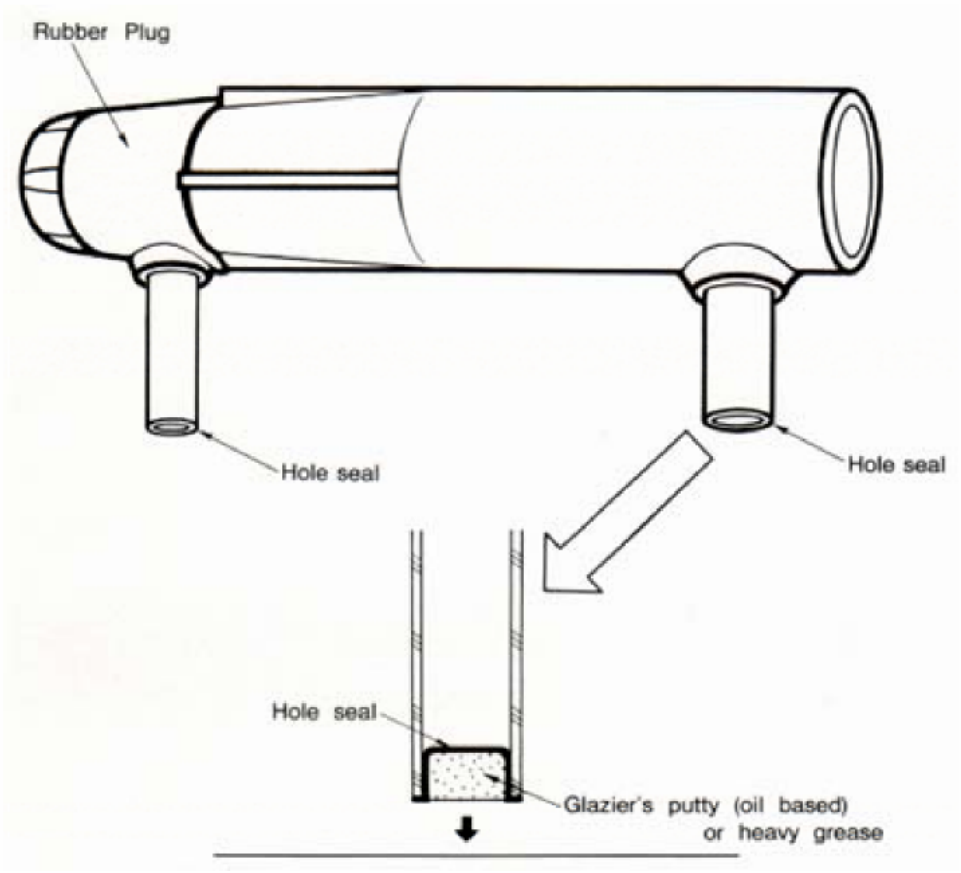

4) HOW TO DETERMINE THE LENGTH OF THE PVC TUBES

Size: Grout inlet tubes: I.D. 0.87" (22 mm) O.D. 1.02" (26 mm).
Grout outlet tubes: I.D. 0.55" (l4 mm) O.D. 0.71" (l8 mm).

The length of the PVC tubes(L_1) (L_2) shall be:

L1 (Outlet port) = A-B_1

L2 (inlet port) = A-B_2

A : The length from the concrete surface to the center of the sleeve .

B_1 : The distance from the center of the sleeve to where the outlet port PVC tubes are attached.

B_2 : The distance from the center of the sleeve to where the inlet port PVC tubes are attached.

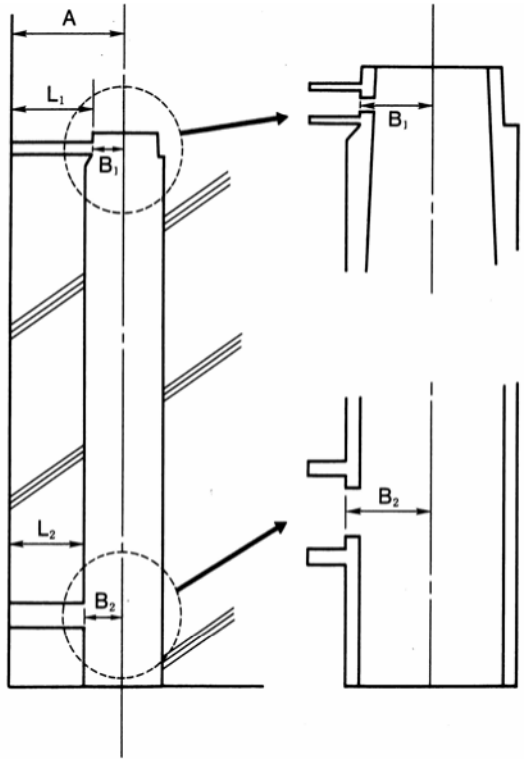

Table-5 Distance B

Except 18U, B1 and B2 are the same at each U-X Sleeve

Sleeve Size	Bar Size	Distance of B (inch)	
		B1	B2
5U-X	#5	0.79	0.79
6U-X	#6	0.87	0.87
7U-X	#7	1.02	1.02
8U-X	#8	1.10	1.10
9U-X	#9	1.18	1.18
10U-X	#10	1.26	1.26
11U-X	#11	1.38	1.38
SNX-11	#11	1.52	1.52
A11W	#11	1.65	1.65
14U-X	#14	1.57	1.57
18U	#18	1.85	**2.16**

5) EXAMPLES OF GROUT TUBE INSTALLATIONS (Plan Views)

SQUARE & RECTANGULAR COLUMNS: Grouting can be done from any face.

FIG. -17

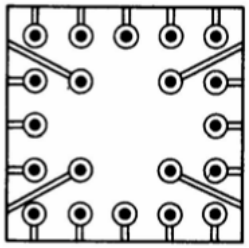

FIG.-18

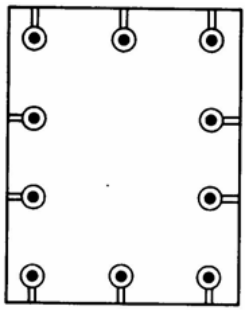

SPECIAL SITUATIONS: Where grouting access is restricted, such as for architectural panels, or when certain faces are inaccessible or hidden.

FIG.-19

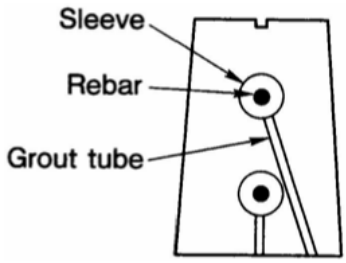

FIG.-20

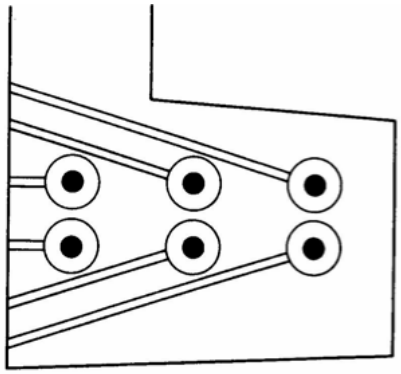

In the event the ends of the grout tubes are not able to be located at right angles to the form, they may be extended through holes in the forms. Because the tubes are on an angle, keep them short and make certain that the holes in the forms are large enough to permit removal of the forms over the ends of the tubes.

If it necessary for the tubes to be flush to the forms, foam plastic or rubber stoppers may be used to seal the tubes. It is important to securely tie the tubes so that they will not be lost.

Grout tubes have also been heated and bent in electrician furnaces in order to provide clearance for the tubes and to permit the ends of the tubes to meet the form face at a right angle. The user is cautioned that bent tubes may be difficult to clear in the event they become plugged.

FIG.-21

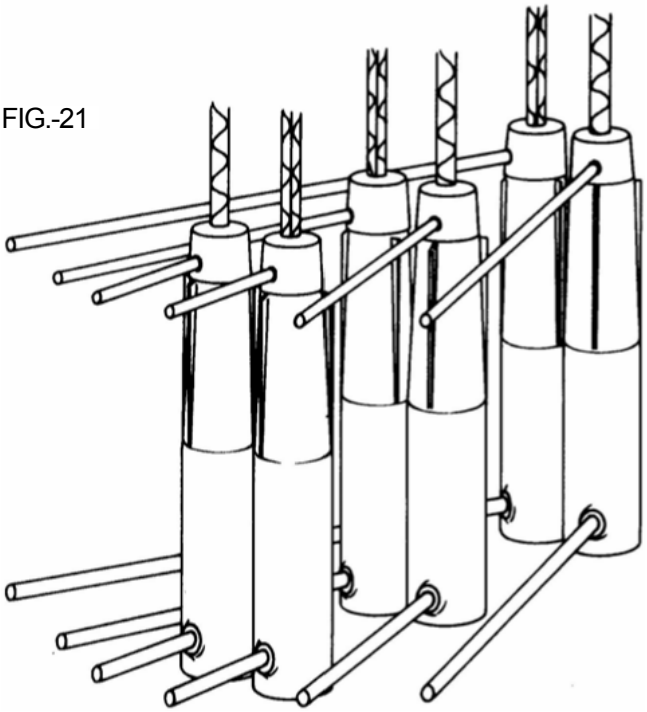

4. HOW TO INSTALL SPLICE SLEEVES IN THE MOLD

4-1. INSTALLING SLEEVES WITH CAM-TYPE SLEEVE SETTER (STR-CT)

FIG.-22

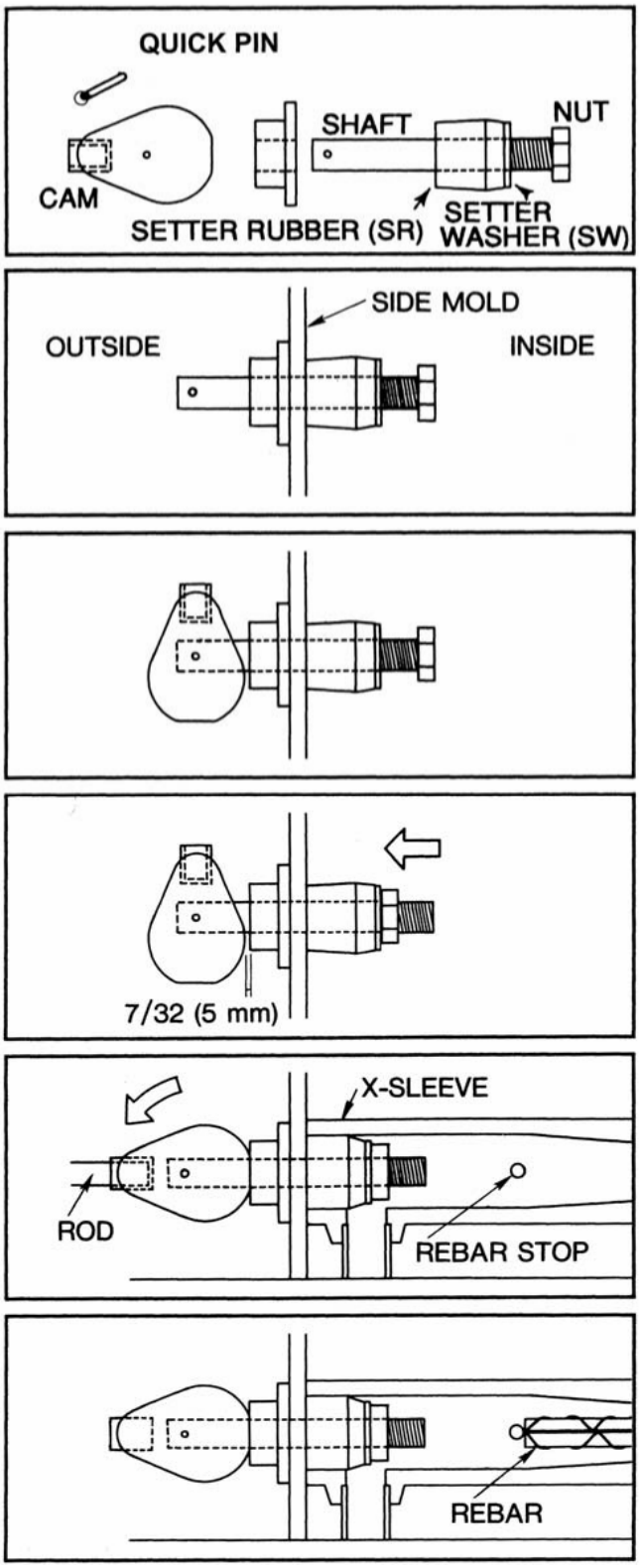

Procedure:

1. Remove the Quick-pin from the shaft along with the cam and bushing.

2. Install the setter rubber, washer and nut on the shaft and insert the assembly through the hole in the mold from the inside of the form.

3. Place the bushing over the end of the shaft, and reassemble the cam to the shaft with the pin. Rotate the cam so that the cam shaft is parallel to outside face of the mold.

4. Tighten the nut with a wrench until the side edge of the cam, when parallel to the outer head of the bushing, is approximately 7/32" (5 mm) from the outer head of the bushing. Do not move the nut once it is set in position.

5. Place the wide end of the sleeve over the setter rubber until it contacts the side of the mold. Insert a lever rod into the socket of the cam shaft, and rotate the cam so that the cam shaft is perpendicular to the face of the mold. Test for proper fit by attempting to twist sleeve. If loose, go back to step 4 and tighten nut.

6. Insert the rebar until it contacts the Rebar Stop in the Sleeve, and secure the rebar in position.

Note: *In order to strip the precast element from the mold, the shaft/rubber can be pushed into the sleeve and retrieved later.*

DETAIL OF CAM-TYPE SLEEVE SETTER (STR-CT)

FIG.-23

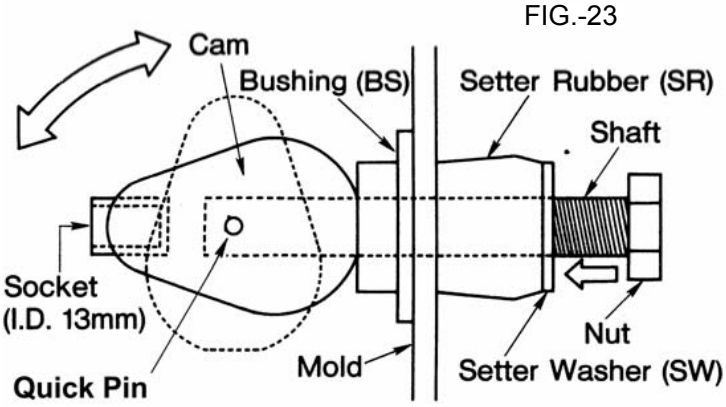

NOTE:
It is important to use a rod that fits the socket or flaring of the hole will result in reduced life of tool. The hole size is 13 mm or about 1/2 inch.

FIG.-24

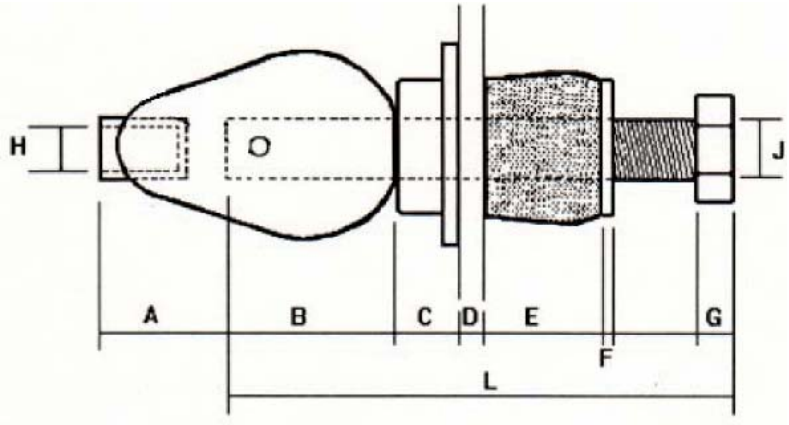

A: Distance between Socket end and the shaft end
B: Distance between the Cam-top and the shaft end
C: Height of bushing
D: Thickness of casting forms to be used
E: Height of SR (Setter Rubber)
F: Thickness of SW (Setter Washer)
G: Height of Nut
H: Inside Diameter of Socket
J: Outside Diameter of Setter Shaft
L: Overall Length of Setter Shaft

Table-6 DIMENSIONS OF SLEEVE SETTER CAM TYPE(STR-CT)
Approximate conversion from Metric to inches Unit: Inch

STR-CT-#	A	B	C	D	E	F	G	H	J	L
5,6,& 7	1-1/4	1-3/4	1	...	**1-5/32**	6/32	9/16	1/2	5/8	7-1/16
8,9,10,11,1	1-1/4	1-3/4	1	...	**1-3/4**	6/32	9/16	1/2	5/8	7-1/16
4 &18										

Unit: mm

STR-CT-#	A	B	C	D	E	F	G	H	J	L
5,6,& 7	32	45	25	...	**30**	4.5	15	13	16	180
8,9,10,11,1	32	45	25	...	**45**	4.5	15	13	16	180
4 &18										

4-2 SECURING REINFORCING BARS

At inserting the rebar into the sleeve, in order to assure that the rebar remains in the proper position against the Rebar stop, it is advisable to mark the bar with paint or tape at a fixed distance from the end of the rubber plug on the end of the sleeve. A recommended procedure using PVC tube is as below:

1. **Cut PVC tube to length of bar fully embedded in sleeve with Rubber Plug attached.**

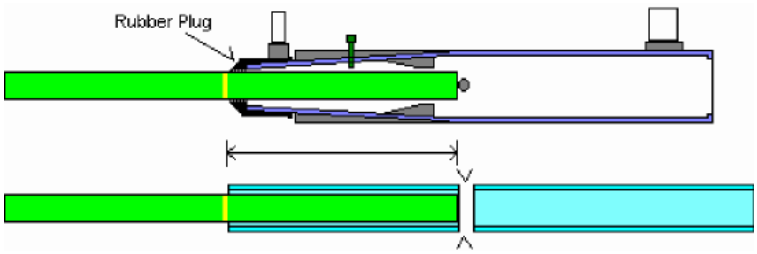

2. **Glue cap on end and mark jig with size of sleeve, e. g. #11U-X, <u>not bar size.</u>**

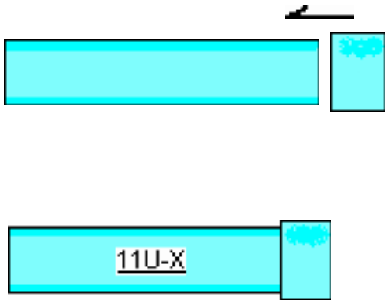

3. **Mark bars with crayon, tape or paint.**

4. **With bar at proper embedment, mark should show at edge of Rubber Plug.**

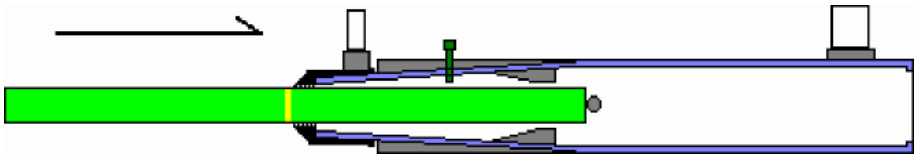

5. **Quality Control should check marks during pre-pouring inspection.**

It is recommended to securely anchor the reinforcing bars in order to prevent them from moving out of alignment with the sleeve during the placing and vibration of concrete. Vibration may cause bars to displace appreciably if they are not anchored.

There are a number of methods used to prevent bar displacement.

Photo12-1 and 12-2 show a method which uses an angle bolted to the casting bed and adjusted firmly against the protruding bar end.

The bars must also be secured against lateral movement. Care must be taken when cutting holes in the forms for the protruding bars. If they are too tight, it will be difficult to remove the forms. If they are too loose, the bars may be out of tolerance after concrete has been placed.

This is especially true when wooden forms are used, because the holes are worn larger with continuous insertion and removal of the bars.

A method has been successfully used whereby holes in the forms for the protruding bars are made larger than necessary for the bar size being used. As shown in the example, a bushing made of a short length of plastic pipe, the outside diameter of which matches the hole size in the form, is slipped over the bar and through the hole in the form. This is sufficient to accurately position the bar and at the same time minimize leakage.

(Example 12-3)

The thickness of the bushings may be altered to accommodate more than one bar size.

After the side forms are removed the plastic bushing is retrieved and reused.

Photo 12-1

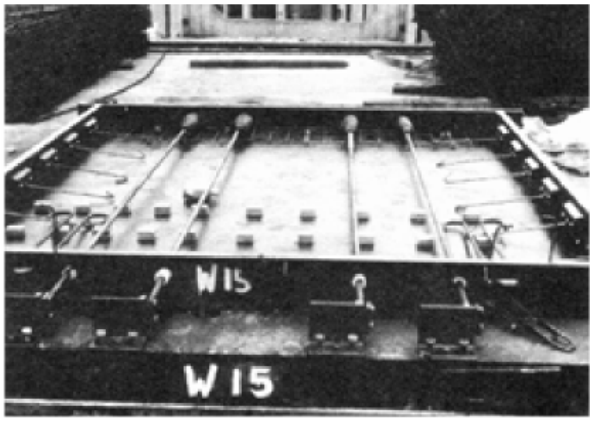

Photo 12-2

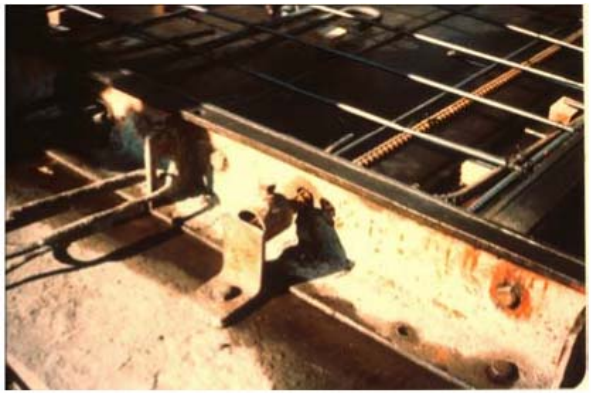

Example 12-3

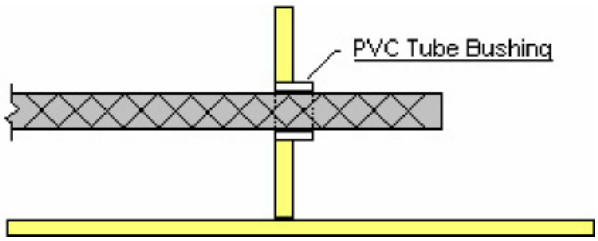

Examples of Bar Clamps

PHOTO 13
Steel pipes are utilized for the bar clamps.

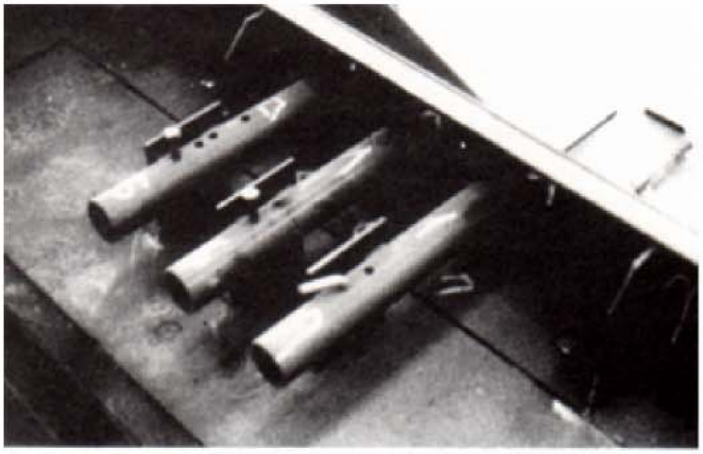

Views from the inside of the mold.
Bolts or pins are inserted through the pipes at the required location at the ends of the bars.

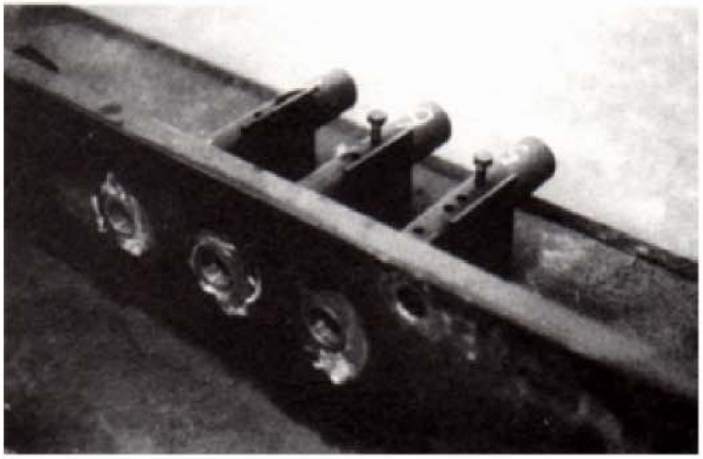

Examples of Bar Clamps
PHOTO 14

Bar clamps before fastening the bars.

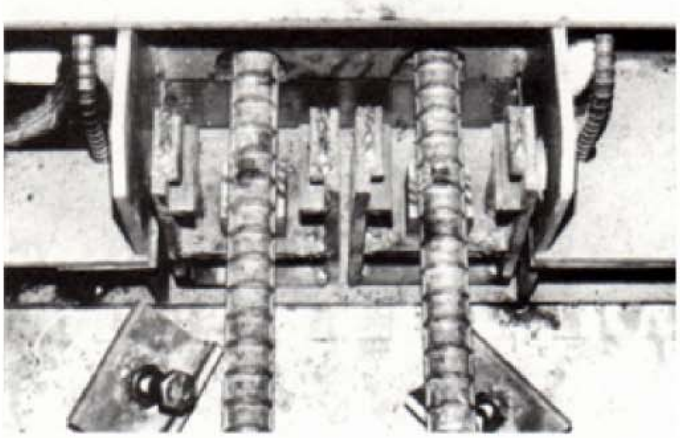

Bar clamps after fastening the bars.

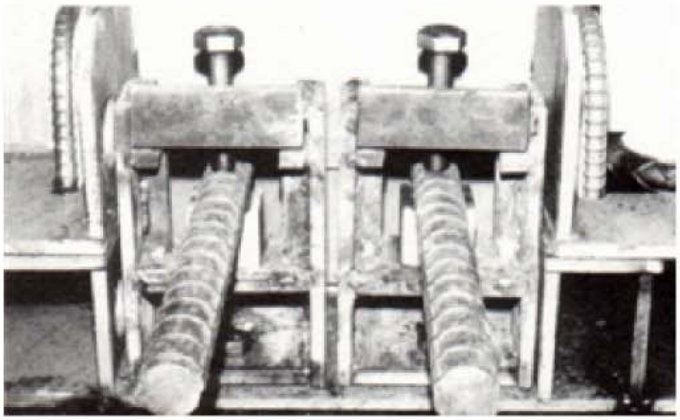

4-3. METHOD FOR INSTALLING POLYETHYLENE PLUGS ON SLEEVES

I) Fit the split plug around the bar snug to the sleeve with the split part up.

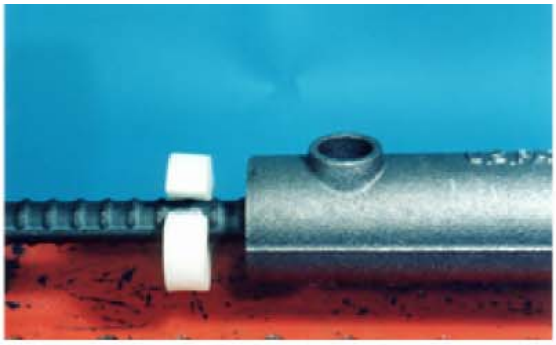

2) Wind plastic tape around the plug at least three times.

3) a) Taping is continued around the plug and then, holding the plug snug to the sleeve end,

b) continuing at least three more wraps across the contact point between the plug and the sleeve

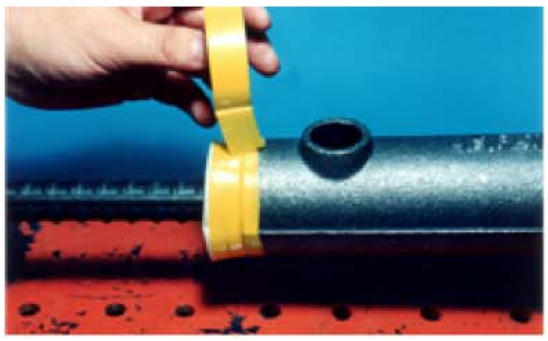

4) Then one more wrap around the sleeve to complete installation.

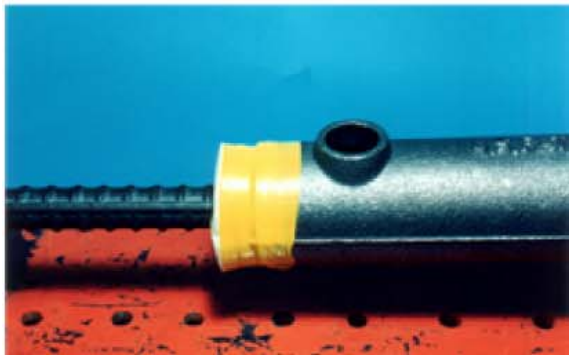

5. INSPECTION PRIOR TO POURING CONCRETE

Check the following prior to pouring concrete:

1) Sleeves in place are the proper size corresponding to drawings. Sleeves are free from dirt.
2) Correct size rubber plugs (RP) are tightly fitted on sleeves and rebars. Tie wires are tied around the small end of the rubber plug over the rebar contact area for oversize or up-size sleeve applications where the sleeve is two sizes or more larger than the bar.
3) Sleeves are properly and firmly secured in the mold.
4) Rebars are up against the rebar stops.
   Check that bar marks are next to End Cap rubber plug.
5) After assuring that the bars are up against the rebar stops, check to see that the lengths of rebars protruding from the mold are within the allowable tolerances. Long bars may be cut back later. Short bars must be replaced before casting.
6) Reinforcing bars and sleeves are held in position and properly supported with chairs, etc.
7) Grout tubes are securely attached on the sleeve and sealed properly with Hole Seals. (Grease Hole Seal cups, if needed)
8) Grout tubes are long enough to reach to or through the firm and are securely fastened at the forms.

Before pouring concrete into the molds, inspect the following points where concrete or slurry may intrude into the sleeves during concreting:

Possible Leakage	Remedy
A) Between foam plug and sleeve	Wrap with more plastic tape
B) Between rubber plug and rebar	Tie with tie-wire or wrap with duct tape
C) Between grout tubes and ports	Apply sufficient adhesive or wrap with plastic tape
D) In ends of grout tubes	Seal with hole seals or duct tape
E) Between setter rubber and sleeve end	Tighten the sleeve setter

FIG.-25

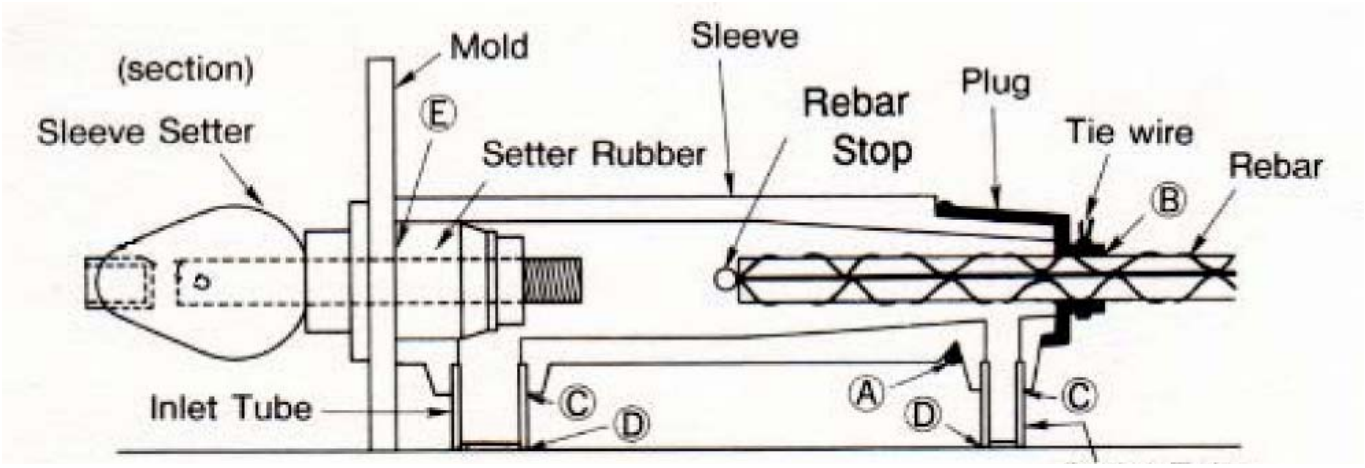

6. PRECAUTIONS DURING CONCRETE POURING

During the pouring and operation of the internal vibrator, care should be exercised not to displace the sleeves, rebars, and accessories from their installed position.

7. LOOSENING THE CAM OF SLEEVE SETTERS

After pouring concrete into the mold, and before Steam-Curing, loosen the cam of sleeve Setter. This helps lengthen the service life of the Setter Rubber.

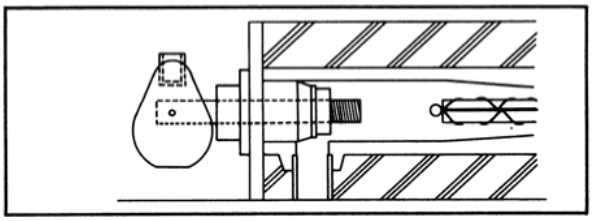

FIG.-26

8. REMOVING SLEEVE SETTERS

Method A: Remove the side mold with the Sleeve Setter. FIG.-27

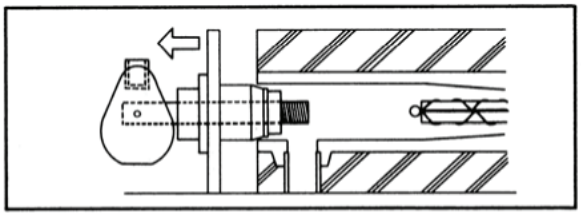

Method B - Remove the cam and bushing. Push shaft into sleeve. Remove the side form. Remove the shaft and Rubber from the sleeve. This method is not applicable for 5U-X thru 7U-X due to the long shaft length.

9. INSPECTION OF PRECAST MEMBERS

Check the following after concrete member has been removed from the form.

1) Use a bright light to visually check the interior of each sleeve by looking through the open end, as well as grout tubes if present. Make sure that there are no foreign substances present (ice, water, dirt, debris, etc.). If foreign materials are present, clean and flush out the contaminating materials with compressed air or water.
2) Check that the length of protruding bars is within allowable tolerance (see Table 1, I-8). Note: When bars are not carried out the other end of the precast element, it is important to securely fasten them in the form so that they will not be displaced out of the sleeve during concrete placement.
3) Using a bright light, Inspect the bar embedment length in the sleeves to be sure that the bars are tight to Rebar stop.
4) Visually inspect the protruding bars to make sure they are free of bonding-breaking substances, such as oil, heavy rust, dirt, etc.
5) Check the sleeve quantity, bar size, and position for correlation to drawing requirements.
6) Check grout inlet and outlet holes to make certain:
   (a) that they are in the proper position and are not covered with concrete.
   (b) that there is a clear passage from the inlet to the outlet port

Caution: Precast members having embedded bar lengths shorter than the specified minimum length should be referred to the engineer for decision on remedy. If the embedded bars are too long, they may be cut to the proper length.

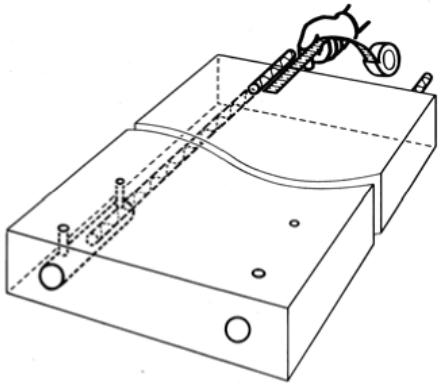

10. PRECAUTIONS DURING STORAGE AND TRANSPORTATION

While precast members are stored and transported, care should be exercised to prevent:

I) Foreign materials contaminating sleeves, grout inlet or outlet holes.
2) Protruding bars being contaminated by bond-breaking substances such as oil, dirt and excessive rust.
3) Protruding bars from being damaged or bent.

REFERENCE

1) TRANSITION SPLICES

Connections between different sizes of reinforcement are called “transition splices”. When transition splices are called for in the drawings, observe the following:

(1) Selection of Sleeve Size

Use a sleeve size corresponding to the larger size rebar.
Examples :

Connection of rebar #9 and #10
Use: Sleeve 10U-X

Connection of rebar #11 and #14
Use: Sleeve 14U-X

(2) Determination of length of rebar and embedment length into sleeves
Please refer to Page III-3 for determination of rebar length, and refer to Table-1, Section I-8 for embedment length into sleeves. Embedment lengths for sleeve used govern.

NOTE:
Both bars shall be embeded into sleeve the length required by the sleeve. Namely both bars shall be kept at the specified embedment length as indicated in Table-1, I-8.

(3) Selection of End Cap Rubber Plugs
Always use an End Cap plug number corresponding to the sleeve number.

(4) Selection of Grout Washers
Always use a Grout Washer (GRW) corresponding to the bar size being inserted in the wide (field) end.

IMPORTANT: The performance of the resulting splices shall be based upon the strength of the smaller size rebars. For connecting #9 and #11 bars as an example, this transition splice will develop the specified strength of #9 bar but not the #11 bar.

For transitions of two bar sizes or more, in order to prevent any intrusion of mortar or cement paste, wind a wire or plastic tape tight around the plug.

A-1 Wind a tie wire (0.04” - 0.07” in diameter) around the end of Plug and twist the wire to tighten.

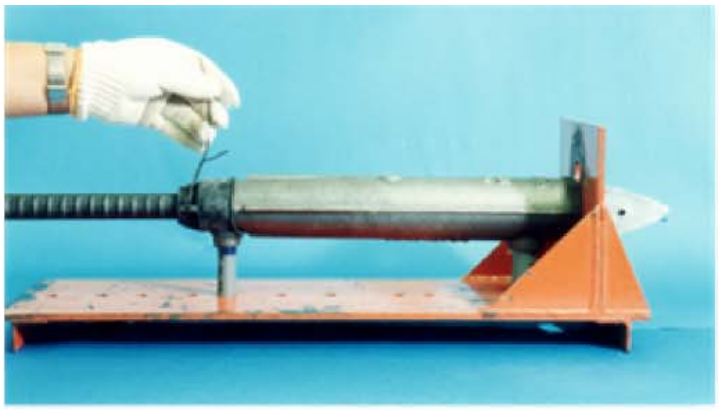

A-2 After winding the wire around the plug.

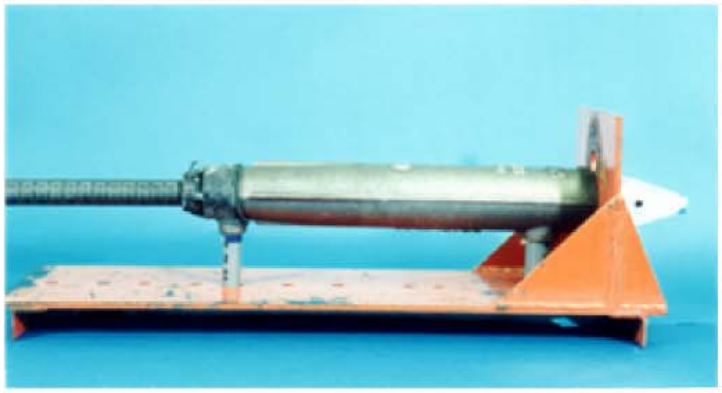

B-1 Wind plastic tape firmly around the end of the plug, 2 –3 wraps.

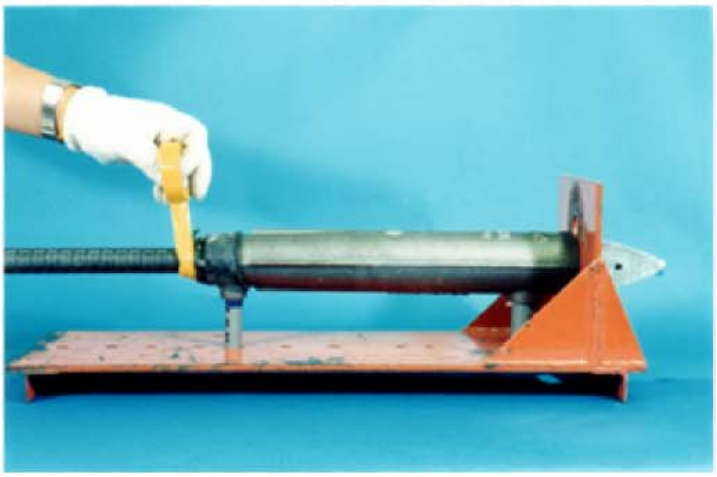

B-2 After winding the tape.

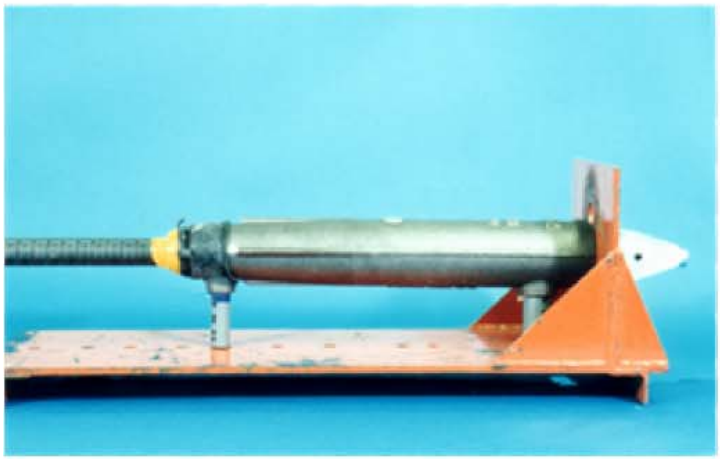

(2)HORIZONTAL SYSTEM

For Horizontal connections , NMB Splice Sleeves are installed at the erection site , grouted with SS Mortar®, and concrete is then placed in the closure pour area.

INSTALLATION PROCEDURE

Preparation :(FIG.-29)

The rebars are marked so that both bars will be embedded to the specified length into the sleeve when it is in its final position.

The Rebar Stops are removed from the Model X sleeve by striking them with a firm blow.

Install the End Cap Rubber Plug(RP) or split foam plastic washer on the narrow end of the sleeve.

Fig.-29

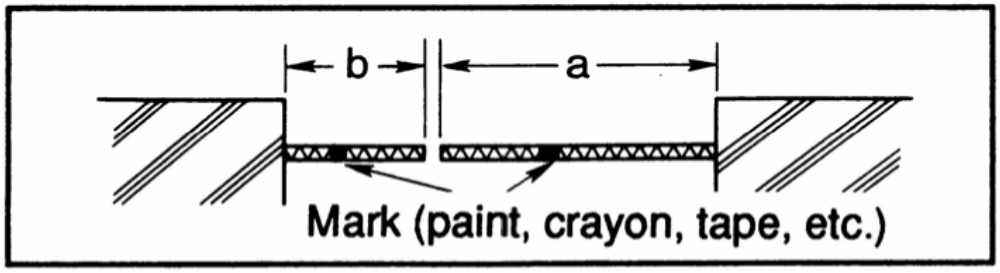

The reinforcing bars to be spliced shall have the following minimum length :

"a"-Sleeve length plus a minimum of one inch

"b"-One-half sleeve length plus a minimum of one inch

Installation: (FIG.-30)

(1) Set the sleeve

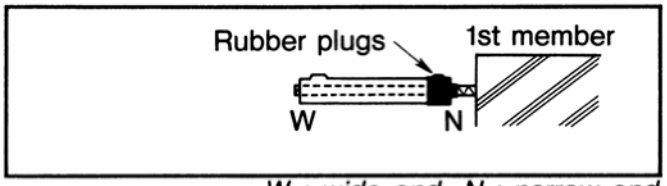

W : wide end N : narrow end

(1) Slide the narrow end of the sleeve onto the horizontal dowel bar protruding from the first precast concrete member until the entire sleeve is on the bar.

(2) Set the Fitting

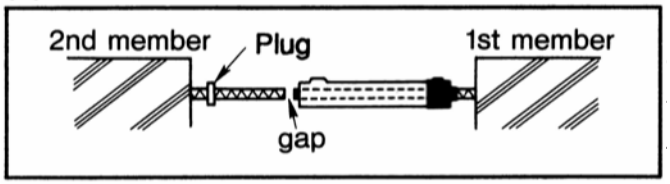

(2) Erect the adjacent (2nd) concrete member. The gap between the reinforcing bars should not be more than 3/4 inches for bar sizes #5 through #7 nor 1 inch for bar sizes #8 and greater. Misalignment of the bar bars shall not be greater than 1/2 inch.

(3) Positioning and taping

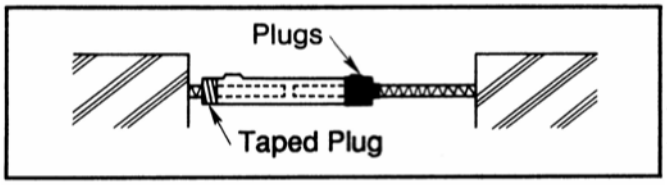

(3) Slide the sleeve over the two dowels with the grout inlets on top until it is accurately located between the previously made marks on the bars. Install a centering device (shim) if necessary to hold the large end of the sleeve in alignment on the bar. Place a split foam plastic plug (obtained from SSNA or locally prepared from foam plastic pipe insulation) against the large end of the sleeve . Wrap vinyl tape around the plug overlapping it to the sleeve and the bar in order to prevent leakage.

(4) Grouting

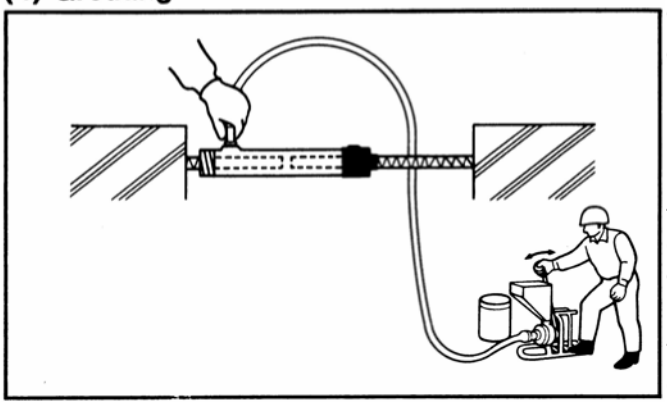

(4) Fill the sleeve with SS Mortar® grout using a gravity hose or grout pump. Seal the inlet and outlet holes with the Hole Seals provided. After grouting, protect the connection from vibration and shock until the grout has gained sufficient strength not to be damaged.

The plugs may be removed, if desired, and the concrete closure placed after the sleeve grout has reached a minimum strength of 4000psi, which should occur within one day at ambient temperatures above 68°F.

In cold weather, heat should be applied to the splices and the grout strength should be confirmed by tests on the grout sample specimens.

IV. FIELD OPERATIONS

CONTENTS

(FIELD PROCESS)

Cast-inPlace Concrete
↓
Foundation Work
↓
Erection of Precast Members
Bedding Mortar
↓
Bracing
↓
Connection Work
↓
Curing
↓
Release Bracing
↓
NEXT STAGE OF CONSTRUCTION

(NMB SPLICE SLEEVE SYSTEM PROCESS)

PART 1. ERECTION: PAGE

1. CAST-IN-PLACE FOUNDATION IV-2

2. INSTALLING WASHERS IV-4

3. BEDDING MORTAR IV-5

BEDDING PRACTICE IV-6
1) PRE-BEDDING IV-6
2) POST-BEDDING IV-8
3) BEDDING MATERIALS IV-9

4. GENERAL NOTES FOR ERECTION AND BRACING IV-10

PART 2. GROUTING:

1. PREPARATION IV-13
2. GROUTING CONDITIONS IV-14
3. CHECK LIST FOR GROUTING FOREMEN IV-15
4. MIXING SS MORTAR (GROUT) IV-19
5. SLEEVE GROUTING IV-21

6. CLEANING IV-23
7. CURING IV-24

PART I . ERECTION

1. CAST-IN-PLACE FOUNDATIONS

Reinforcing bars which protrude from cast-in-place concrete foundations and which are intended to be connected to precast elements by means of the splice sleeves need to be carefully aligned both in plan and elevation.

Bars extending from the foundation or protruding from precast elements to be joined in the Splice sleeves are termed "dowels" or “rebar anchor dowels” in this section.

When the foundation contractor is not the precast concrete supplier, the dowels are very likely to be misaligned or out of tolerance if the foundation contractor is not provided with special installation instructions and templates. This is because the tolerances for placing reinforcing bars under ACI code provisions for cast-in-place concrete are far too great to permit sufficient accuracy for precast concrete connections.

The following recommendations will help assure successful mating of the precast elements to the cast-in-place structure:

1. The designer should include in the specifications for the cast-in-place concrete a requirement that plan location tolerances for reinforcing bars should be ± 1/8 inch.

2. The precaster should provide the foundation contractor the information necessary to prepare dual templates (see Fig.31) to hold the foundation bars within tolerances specified above. A training video is available from SSNA to assist the contractors.

3. The foundation contractor should be requested to extend the reinforcing bars above the foundation several (4-6) inches longer than required. The bars can be later cut off to the required elevation after grades have been established and shims have been set.

4. A prudent precast concrete contractor will establish communications and a cooperative relationship with the foundation contractor early in the project.

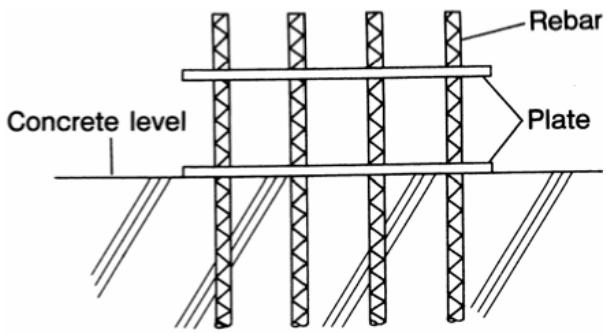

FIG.-31

Methods for correcting mislocated or short rebar dowels are discussed in Section V TROUBELSHOOTING later in this manual.

RECOMMENDATION FOR LOCATING REBAR DOWELS IN FOUNDATION

1. The precast concrete manufacturer should furnish the site-work contractor a template for holding the dowels. The template is prepared by drilling holes to accommodate the rebar dowels to match the holes in the side-forms used for making the precast elements. Templates may be of wood or metal. Plant quality control personnel should check that the holes in the templates are in the correct locations before sending the templates to the job-site. The foundation contractor should use the templates to make dual plate jigs (see Fig.31) to hold the dowels in horizontal and vertical alignment.

   In the case of tilt-up or site precast work, side forms for the panels may be re-used as templates for locating the dowels, or templates or locating dowels may be fabricated to function as side forms, depending upon the sequence of construction.

2. Rebar dowels protruding from the foundation should be fabricated so that the vertical extension of the dowels is at least 4" longer than needed.

3. Templates should be accurately located in place and securely fastened. Patterns of dowels that are separated, but within the same precast member should be positioned with a single template assembly.

4. Vertical rebars should be accurately aligned by dual plates (see Fig.31) and may be secured by tack-welding a #3 or #4 rebar to the dowels at the top of the bars. This tack-welded bar will be cut off later and not used in the splice sleeve.

5. The quality control agency or precast concrete manufacturer should check dowels for proper location and alignment before the foundation concrete is placed.

6. Immediately after the concrete for the foundation is poured, the templates and dowels should again be checked to assure that they have not moved during concrete operations.

7. After the concrete has cured, the excess length of dowels, along with the tack bars, are cut off. The cut-off point of the bars is determined from the table below and is measured from the top of the shims.

TABLE-7

Sleeve Size	Dowel Length (inch)
5U-X	4.53
6U-X	5.32
7U-X	6.11
8U-X	6.99
9U-X	7.88
10U-X	8.66
11U-X	9.45
SNX-11	8.86
A11W	8.96
14U-X	11.91
18U	17.56

A Video showing recommended templates is available from SSNA.

2. INSTALLING WASHERS (GRW)

Place washers on dowel bars protruding from the foundation. The printed size number on the washer must correspond to the size of the rebar on which it is placed. (Washers and bars may be color-coded by the contractor, if desired, to improve field accuracy).

The purpose of the washer is to prevent bedding mortar from entering the sleeve in pre-bedding procedures. To prevent bedding grout from intruding into the sleeve in post-bedding applications, use the coil spring (CS) accessory or a foam ring to support the GRW up against the wide end opening of the sleeve. To prevent sleeve grout from escaping when sleeves are grouted before bedding is installed, use a foam ring seal under the GRW.

1) When bedding mortar is placed prior to setting the precast unit in position, the washer shall be place just above the bedding mortar surface, with the marked side face-up (rubber portion of washer down). When the upper precast element is lowered into position, the washer will prevent bedding mortar from entering the sleeve.
2) When bedding mortar or concrete topping is placed after the sleeves are grouted, the washers should be supported tightly against the bottom of the upper precast element. This may be done with foam ring seals, Coil Springs, wedges, silicone caulking or similar methods. In most cases, it is best to place bedding mortar and allowing it to achieve at least an initial set before grouting sleeves.

IMPORTANT: Use washers appropriate to the field dowel size for transition splices.

Inspection <u>before</u> bedding mortar

1) Check the size, number and position of foundation rebars for correlation to drawing requirements. Make any corrections required before the precast elements are erected.
2) Visually inspect dowels to make sure there are no bond-breaking substances, such as heavy rust, cement paste, oil, dirt, etc. Clean dowels as needed.
3) Measure protruding bar length to assure that each is within the specified embedment length tolerance provided in Table-1, I-8. Note that allowance in the length must be added for shim (joint) thickness between the foundation and the precast elements.
4) Check the washers (GRW) are properly set on each bar as specified above.

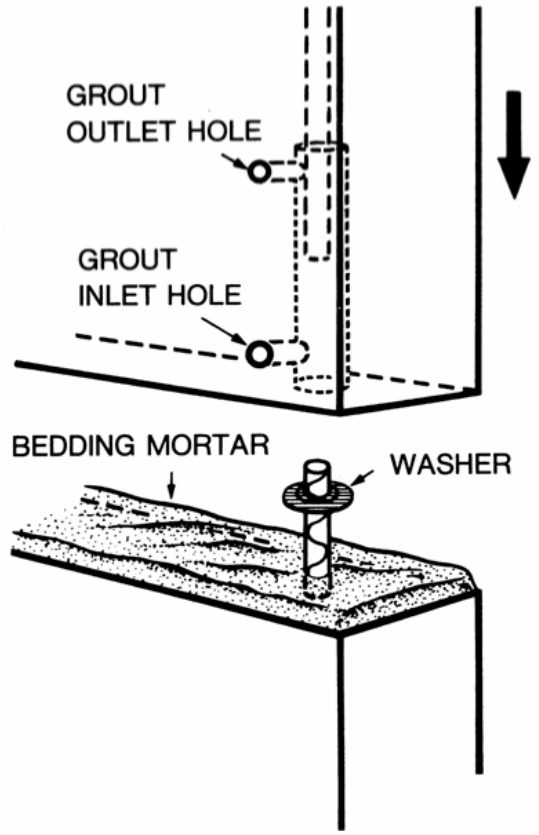

FIG-32

3. BEDDING MORTAR

Mortar to be used for bedding should conform to the engineer's specifications. The consistency of the mortar should be suitable for the chosen bedding practice.

After joining the precast members, the bedding mortar should be completely finished without leaving any unfilled space between the members.

Proper curing requirements should be observed. For current practices, refer to pages IV-6~IV-9.

The use of factory prepared bedding grouts is strongly encouraged and the use of uncontrolled field mixed sand-cement-water materials is emphatically discouraged.

FIG.-33

PLACE MORTAR EVENLY TO
PREVENT LEAKAGE OF SLEEVE GROUT

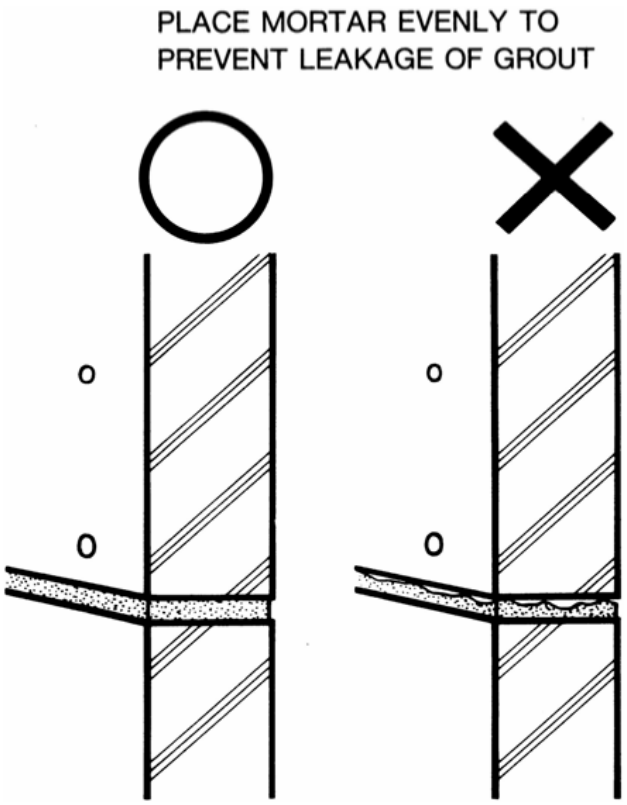

BEDDING PRACTICE

Bedding practices for setting precast elements vary according to regions. Bedding may be placed prior to setting a precast element (prebedding or wet-bedding) or after a precast element has been set (post-bedding or dry-packing). Following are some general considerations at POST-GROUT Sleeve installation. (See GENERAL NOTES FOR PREGROUT(PRE) INSTALLATION on page IV-11)

1) PRE-BEDDING (WET-BEDDING)

Pre-bedding is usually accomplished by placing the mortar bed immediately ahead of installation of the precast unit.

An economical labor-saving technique which has been used for wet-bedding is described below.

1) Place temporary "dams" as required.
2) Place the bedding mortar so that there is sufficient quantity to completely fill the joint. It is preferred to overfill the joint space slightly.
3) Check to see that the GRW washers are properly placed.
4) Erect the precast member.

Temporary dams:

Temporary dams made of foam plastic are installed to confine the bedding area. After shims (where needed) have been placed, mortar of a flowable consistency and of the specified strength is poured into the confined space. The temporary dams perform several functions:

a) They confine the bedding mortar.
b) They provide a screed line to assure sufficient depth of mortar bed, and at the same time reducing material waste.
c) When the precast element is set, mortar bedding is surcharged by the weight of the precast member, assuring uniform bedding as well as visual indication (from the overflow) that an adequate amount of mortar was used in the bedding space. Make sure there is an opening(s) in the dam to provide an escape path for excess bedding mortar, so that it does not force past the seal at the GRW into the sleeve.

On floors, the dams used may be made of 1 "x1" wood stock, installed temporarily, approximately 1/2 inch (1cm) outside the bottom dimension of the precast element being set. They may also be foam closed-cell glued to the floor.

Where there is no horizontal surface available to install wooden strips, such as for columns, shear walls or exterior bearing walls, a square section of foam closed-cell may be used. It is secured to the top of the lower column or wall element around its perimeter with adhesive or strong tape (such as furnace duct tape), and is located within the bedding area. It is notched to provide for overflow of excess mortar. In this type of bedding, the precast element compresses the foam closed-cell dam to the degree permitted by the bedding shim, and at the same time surcharges the bedding mortar. In some cases where exterior bearing or shear walls are used, the foam dam strip used on the external face of the wall is left in place to form a weather seal function. Normally, however, dams are removed after curing and the joints are struck for finished appearance. (See Page IV-7 for examples)

NOTES:

(1) The type of bedding material used is at the discretion of the specifier.

(2) When sleeve grout is used as a wet-bedding material, the user is cautioned that the presently-approved grout contains iron particles. If exposed to moisture or outside weather conditions, the iron particles in the **exposed portion of the grout will rust** and will likely stain and streak the concrete. If architectural precast units are used, or if rust stains are objectionable on exposed concrete, post-grout (PG) methods using a non-shrink, non-metallic bedding mortar are recommended. Care should be taken to assure that full bedding is achieved and that grouting of the sleeves is delayed long enough for the bedding material to gain enough strength to prevent metallic sleeve grout from penetrating to the external surface of the mortar bed.

(3) In general, where it has been possible to use pre-bedding rather than post-bedding techniques, labor cost savings have been achieved. However, contemporary practices have been influenced by labor craft jurisdictions, the contractual relationship between contractors, subcontractors and suppliers, and by reluctance to change previously established field practices. It is strongly recommended that the manufacturer of the precast elements maintain control of all grouting procedures including sleeve grouting and bedding.

Examples of Wet-bedding

(a) Interior Walls

FIG.-34

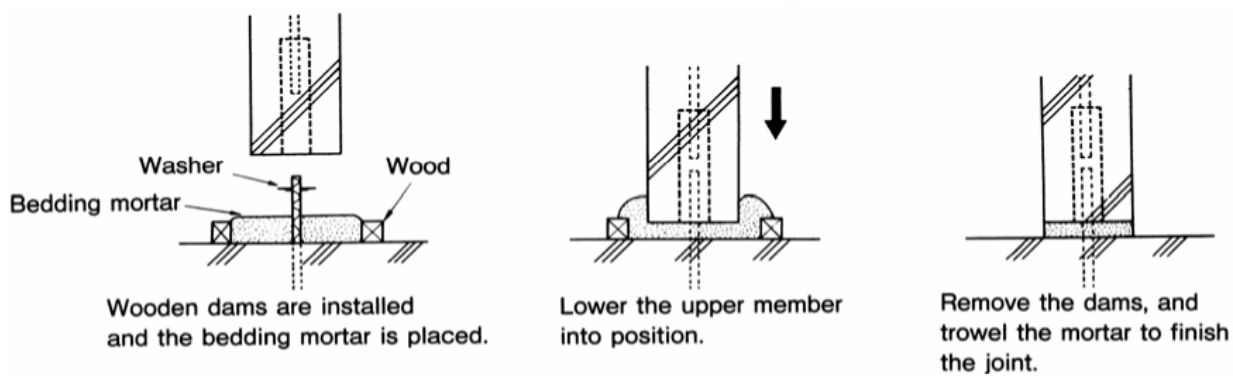

(b) Exterior Walls

FIG.-35

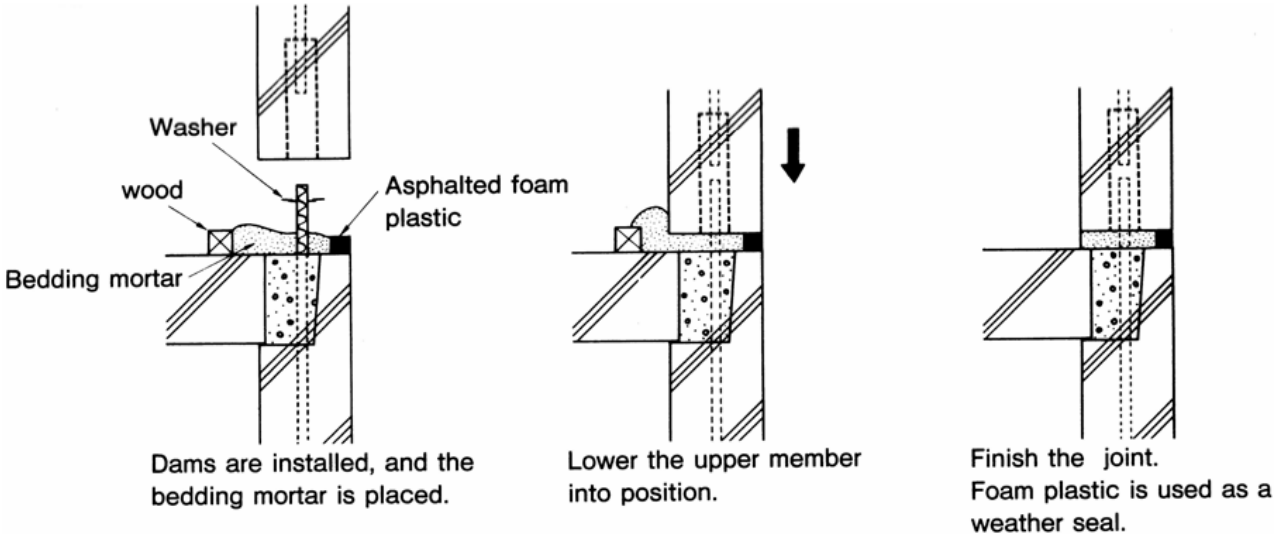

(c) Columns and Free-Standing Shear Walls

FIG.-36

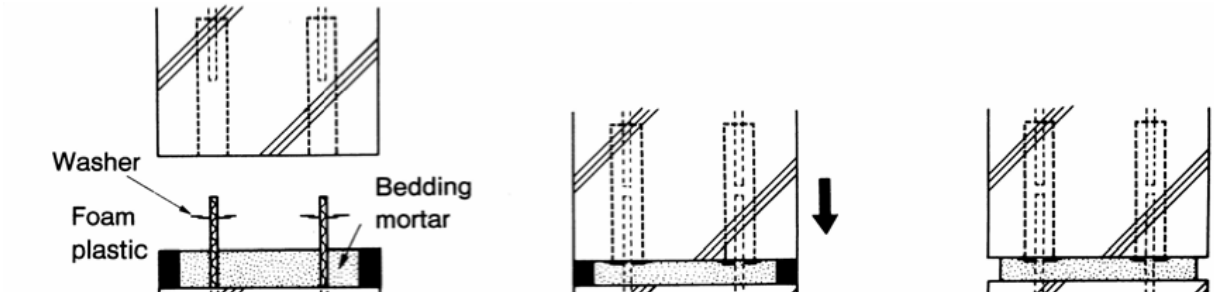

2) POST-BEDDING

Post-bedding has been accomplished by using a technique known as "dry-packing" or by pressure grouting.

① Place temporary dams if and as required.

② Assure that the GRW washer is supported tightly against the base of the upper precast element. This may be accomplished with the use of Coil Spring or Foam Ring Seal support. (FIG-37) Some erectors have had success putting a bead of silicone caulking around the top surface perimeter of the GRW and seating it up against the underside of the precast at the wide end opening of the sleeve. Sleeves should be grouted after the bedding mortar is placed.

Coil Spring

FIG.-37

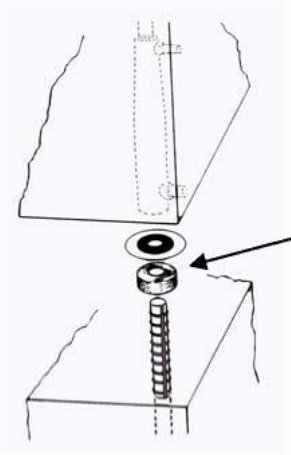

DRY-PACKING

In dry-packing, mortar is hand-forced into a bedding space which has been kept open with the use of shims or leveling bolts. This process is labor-intensive, and it may not be certain whether the mortar bed is adequately transferring the compressive loads or if the shim pack is the principle load-bearing element. Dry-packing should be done in joints that are at least 1 .5” thick.

PRESSURE GROUTING

Pressure-grouting, pumping the bedding mortar into the joint space, has also been used in some cases. It is especially appropriate under cold-weather conditions when it has been impractical to install a wet mortar bed because of freezing temperatures. After some external heating has been applied to the precast elements, bedding mortar is pumped into the joint which has been previously confined by use of a foam gasket or mortar dams around the perimeter of the bedding space.

NOTES:

When post-bedding methods are used with PG-type sleeves, GRW washers must be used.

If the sleeves are to be grouted after installing the bedding, post-grouting of the sleeves must be delayed until after the bedding mortar has partially hardened. If the sleeves are grouted before the bedding is installed, care should be taken to assure that the washers are firm against the bottom of the upper precast element and secured into position by wedging or other appropriate measures such as the Foam Ring Seal. The GRW alone will not provide sufficient sealing capability to withstand pumping of SS Mortar® into the sleeve.

3) BEDDING MATERIALS

Bedding materials may be classified as follows:

Factory Formulated or Field-mixed sand-cement
Metallic or Non-metallic

The use of field mixed sand and cement mortars is not recommended.

The strength of the mortar bedding should be superior to that of the concrete elements on either side of the joint.

It is recommended that only factory formulated non-metallic grouts be used for bedding that is exposed to the elements. Metallic grouts can be used if protected from weather.

FIG.-38

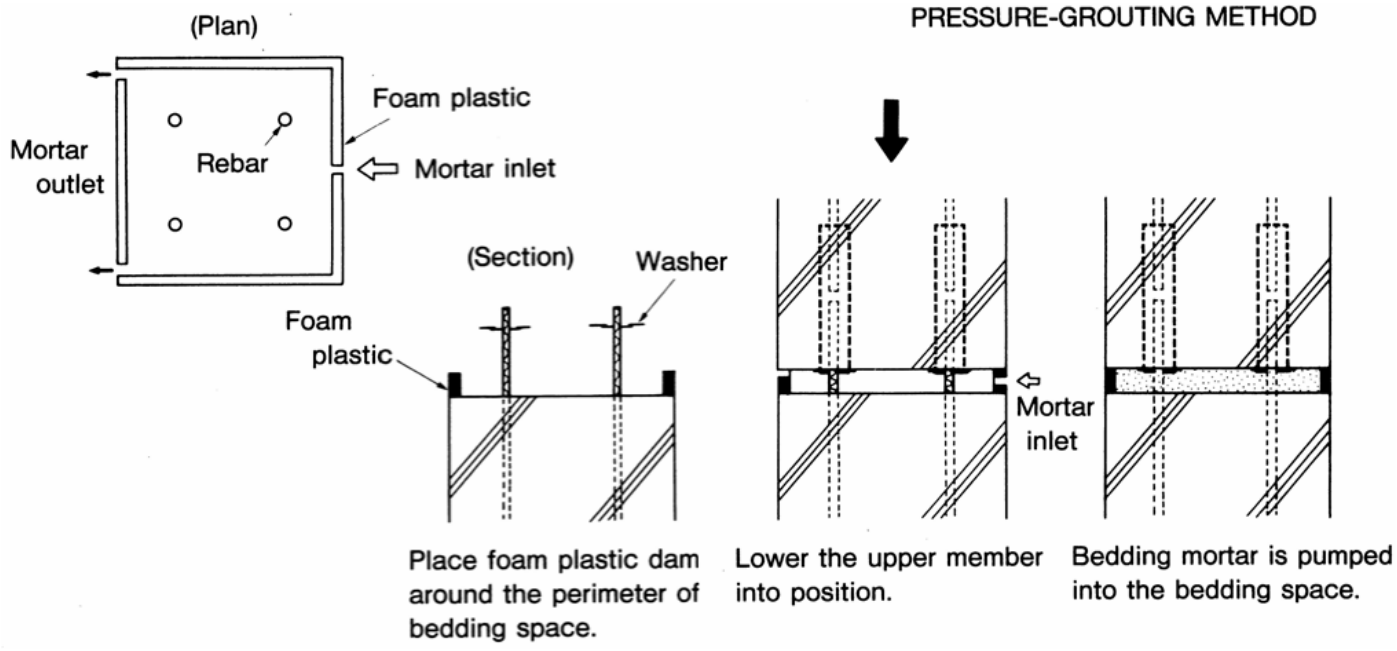

4. GENERAL NOTES FOR ERECTION AND BRACING

When joining precast units, each unit should be lowered into position smoothly, gradually, and in a level or plumb position. Care must be taken to see that each protruding bar fits into the matching sleeve. After setting the precast elements, they should be braced to prevent movement until the grout in the joints and sleeves develops sufficient strength for the element to be self-supporting under the anticipated loads. It will be necessary for the structural engineer to make this analysis and set the requirements for release of bracing. (ref. Field Operation Part2, Grouting, 7 Curing, IV-24)

FIG.-39

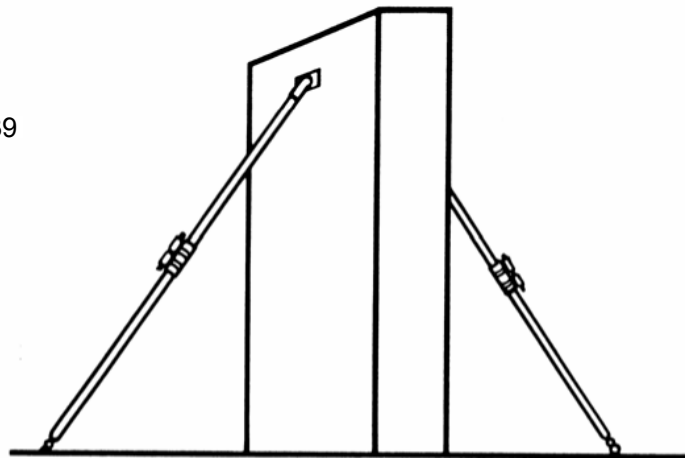

Photo-18

REMARKS:

a) During erection, or while pouring concrete floor slabs, special care must be taken to protect protruding bars from bond-breaking substances, such as cement paste, etc, and to prevent the bars from being bent.

b) When the protruding bar is longer than necessary, it may be cut back by saw or torch. When bars are short, refer to page V-2 for Trouble-shooting or contact SSNA for remedial procedures.

GENERAL NOTES FOR PRE-GROUT (PRE) INSTALLATION

PRE-Grout Installations: This procedure is used when the sleeves are oriented below the joint without PVC tubing to pump SS Mortar® inside. It may be useful in situations requiring a “blind” architectural connection with no exposed tubes that require patching.

FIG.-40-1

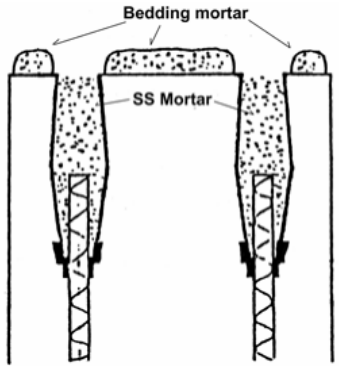

FIG.40-2

ALWAYS FILL SLEEVES WITH SS MORTAR® FIRST, THEN GROUT JOINT

Bedding mortar for Pre-Grout Method:

Pre-Bedding:

Place temporary dams if required. If the joint space will not be exposed to the elements, the simplest and fastest procedure is to use SS Mortar® (Grout) in the bedding area and in the sleeves, placing both at the same time.

However, in the event that special conditions warrant pre-bedding with a non-staining grout (other than SS Mortar® (Grout)), extreme care must be exercised to assure that the grouts are not inadvertently interchanged. It will be necessary first to completely fill the sleeves with SS Mortar® (Grout) before installing the bedding grout.

After filling sleeves with SS Mortar®, place the bedding mortar so that there is sufficient quantity of bedding mortar in the joint. The bedding mortar must fill the joint space completely. It is preferred to overfill the joint space slightly.

NOTE: SS Mortar® (Grout) contains iron particles and if exposed to the elements will cause rust staining. If the joint is to be exposed, it is preferable to fill the sleeves with SS Mortar® (Grout) and to finish the joint by Post-Bedding with a non-metallic non-shrink grout.

Post-bedding:

In this application, the sleeves are completely filled with grout and rodded before the upper precast concrete element is set. The grout in the sleeves should be allowed to achieve an initial set before grouting the joint so that SS Mortar® will not be displaced to the surface of the structure where it might rust.

Bedding mortar may then be placed by "dry-packing", flowing or pumping, as in the case of the Post-Grout application.

NOTE

Except under unusual conditions, PRE-Grout installations are not recommended at the foundation level because of the difficulties of correcting mislocation mistakes and preventing contamination of the sleeves. However, there are occasions where contractors may need to use this installation procedure. In that case:

1) Sleeves installed in foundations should be thoroughly inspected for plan location and elevation immediately before and immediately after the foundations have been poured so that any needed adjustments may be needed. This will allow time for making any corrections needed.

2) The interiors of the sleeves should be thoroughly cleaned immediately after pouring foundations and kept sealed against intrusion of foreign matter until erection begins.

PART 2. GROUTING

1. PREPARATION

The following preparations should be made:

(1) Prepare a daily work schedule.

(2) Determine the number & types of sleeves to be grouted.

(3) Assign a number to each sleeve shown on the drawing; and correspondingly at the job site on the precast element. (See FIG-42 Grouting Sequence)

(4) Establish the procedure for grout sampling and testing for quality control.

(5) Procure electricity and water for mixing. (Hot water in cold weather)(Cold water in hot weather)

(6) Determine and procure the required quantity of SS Mortar.

Required quantity of SS Mortar® for NMB Splice-Sleeve®

REBAR Size		Splice-Sleeve	SS Mortar	
U.S.	Metric	Model	lb/sleeve	Sleeves/Bag
#5	16mm	5U-X	1.26	43
#6	20mm	6U-X	1.76	31
#7	22mm	7U-X	2.65	20
#8	25mm	8U-X	3.46	15
#9	28mm	9U-X	3.95	13
#10	32mm	10U-X	4.94	11
#11	35mm	11U-X	6.02	9
#11	35mm	SNX-11	5.71	9
#11	35mm	A11W	6.99	7
#14	40mm	14U-X	9.19	5
#18	57mm	18U	25.31	2

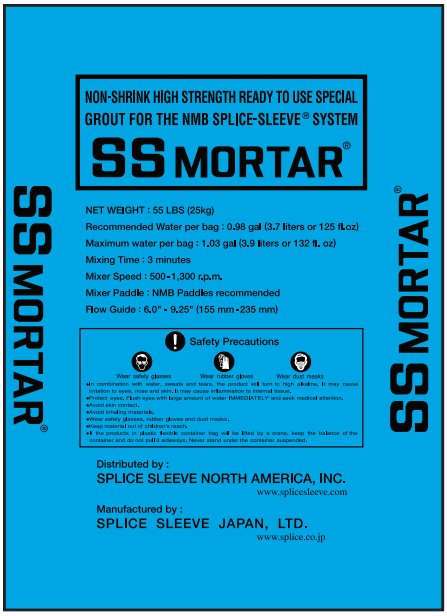

(7) Check the weather and temperature forecast at the jobsite for the day.

(8) Review the Grouting Foreman's Checklist.(See details in IV-15)

(9) Inspect precast elements immediately before erecting to assure that sleeves and grout tubes are clear and free from restrictions.

FIG.-41
BLOWING OUT LOOSE MATERIALS

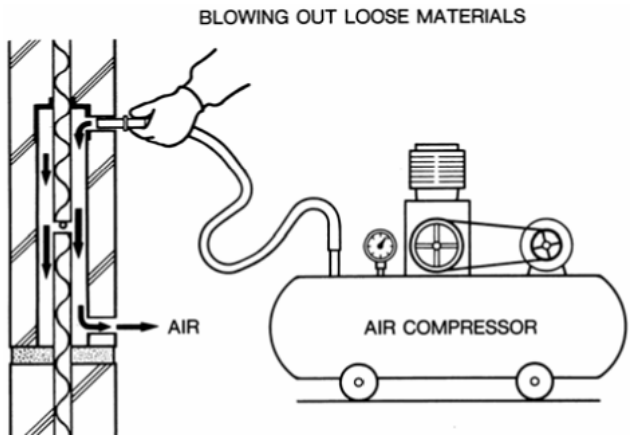

Note: Water may also be used to flush out sleeves.

2. GROUTING CONDITONS

Store the grout under temperature controlled conditions from a minimum 50°F (10°C), to a maximum 80°F (27°C).

Cold Weather Conditions:

During cold weather, check the temperature inside the sleeves from the inlet or outlet hole. If temperature is 40°F (4.4°C) or below, the temperature must be raised to above 40°F, as specified in ACI 306. Necessary steps should be taken to prevent freezing of the grout in the sleeves and to maintain curing temperature not lower than 40°F as specified in ACI 306. It is best to maintain a curing temperature above 60°F (15°C) to insure overnight curing results in sufficient compressive strength to remove braces.

Hot Weather Conditions:

During hot weather, necessary steps, such as the use of chilled mixing water, should be taken to keep the mixed grout temperature below 80°F. Avoid excessively high temperatures (above 80°F or 27°C) of mixed grout which may result in premature setting, difficult pumping, and lower strengths than expected.

Adverse Weather Conditions:

Grouting should not be performed under the following conditions:

(1) When it is raining or snowing at the jobsite, and there is no shelter or protection to prevent rain or snow from entering into the dry or mixed SS Mortar® (Grout).

(2) When it is anticipated that the grouted members or sleeves will be subjected to harmful vibrations, impacts, or other forces resulting in differential movement of the pieces being joined.

(3) When the temperature is anticipated to be below 40°F and no facilities are available to raise and maintain the building temperature and curing temperature above 40°F.

PHOTO-19-1 Propane fired Radian Heater Unit

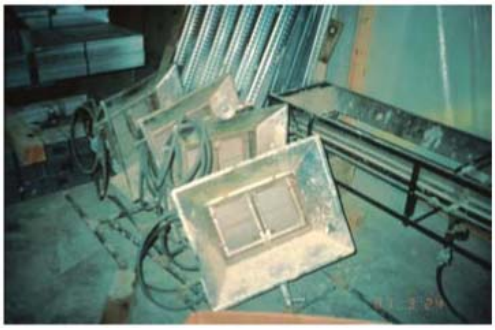

PHOTO 19-2 Thermalay Electric Blanket around the column

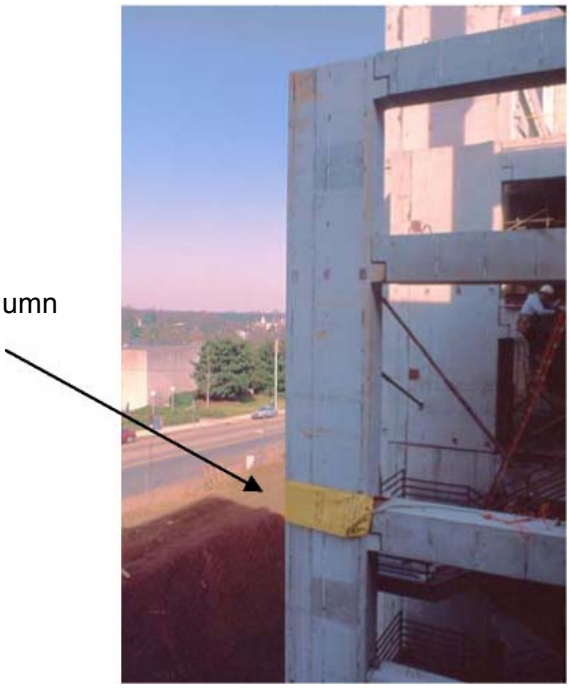

3. CHECKLIST FOR GROUTING FOREMEN

Note that special inspection is required by the Building Code. This is normally accomplished by a certified testing and material laboratory.

Special inspection in the field should cover the following:

1. Check field dowels for proper embedment length.

2. Observe mixing of SS Mortar®
   a. Verify mix temperature within acceptable range
   b. Verify quantity of mix water below maximum.
   c. Record batch serial number from grout bags.

3. Observe and verify grouting of each sleeve.
   a. Verify grout exiting from outlet port.
   b. Verify sealing of ports.

4. Take 2” cube samples of SS Mortar® for compressive testing in lab.
   a. Set of 3 cubes to test before removing bracing (24 hours±)
   b. Set of 3 cubes to test at 28 days
   c. Set of 3 cubes to hold in reserve, if needed.

In order to perform the grouting operation most efficiently, it is necessary to arrange for equipment and assistance if needed in advance of the grouting work.

- □ Review the sections of this manual on sleeve grouting and bedding.
- □ Notify testing laboratory to provide special inspection during grouting.
- □ Arrange for grout manufacturer’s field representative to provide training.
- □ Procure approved grout: SS Mortar® (Grout), as approved. Allow at least two weeks for delivery. Check with grout manufacturer for delivery time.
- □ Grout Mixer and Pump:
  (1) For grouting a small or moderate quantity:
  - □ 1/2-inch electric drill for mixing, operating at a drill speed range of 400 - 500 rpm.

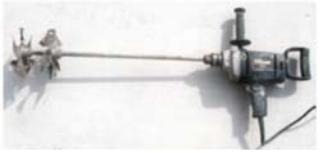

- □ Mixing paddle. “Jiffler” Model 141 propeller-style mixer preferred, or equivalent. Contact the grout manufacturer for recommendations.

- □ Hand operated pump. Kenrich GP-2HD/SS is recommended.

- □ Five-gallon round smooth-sided mixing buckets. You will probably need several as they may develop leaks or otherwise wear out. Avoid plastic buckets because they wear out fast and the mixing operation abrades pieces of plastic which interfere with pumping and grouting. Avoid metal “garbage cans” with vertical or horizontal ribs which catch dry grout and prevent thorough mixing.

(2) For grouting a large quantity:

- □ Grout mixer: A power mixer which is most commonly used for mixing non -shrink, flowable high strength grouts.
- □ Power pump: A pump which does not cause any segregation of the mixed grout placed in the hopper and the grout coming out of the pumping hose nozzle, nor cause any entrapped air during pumping, and which has output capacity of 5.3 gallons (20 liters) per minute or less. Contact the grout manufacturer for recommendation.

- □ Flow Guide from grout manufacturer (to check consistency for pumping)

- □ Water supply and hose with nozzle to fit grout port tubes.
- □ Rubber Stoppers: To be inserted in the grout tubes after grouting to prevent grout leakage. They are available from chemical glassware supply houses. Sizes needed are #0 and #4 for the 0.55”(14mm)(I.D.) and 0.87" (22mm) (I.D.) PVC tubes respectively. After being inserted into the grout tubes, they should protrude outside about half their length. Do not use bark corks as they are difficult to remove and non re-usable.

- □ Measuring cup to measure the correct amount of water for the mix. The correct amount of water will be established at the jobsite. For special assistance, contact the grout manufacturer.
- □ Scale. This is to measure the correct weight of water and serves the same purpose as the measuring cup, and may be used as an alternative.
- □ Electric power supply.
- □ Cup to collect and save excess grout coming from the outlet port during grouting.
- □ Round flat-end punch to remove obstructions from the grout tubes.
- □ Sledge hammer to drive the punch.
- □ Flashlight or spotlight to check the grout tubes and sleeves for blockage. Use prior to erection of the precast unit while it is on the ground or on the delivery truck.

- □ Heating facilities in cold weather to permit grout to gain strength : Gas or electric radiant heaters, electric blankets and plastic sheets for closing in space.
- □ Spatula or putty knife to remove excess grout.
- □ Sponge and water to clean area.
- □ Thermometer to measure temperature of air and materials

□ Record the following items:

1. Temperatures: Ambient, Mixing water, Dry grout and Grout as mixed.
2. Lot No. of grout used
3. Amount of mixing water used (gal or lb/55 lb. bag)
4. Flow measurement by Flow Guide (inches)
5. Sizes and numbers of grouted sleeves
6. Amount of grout used for item 5 above
7. Date of grouting

Table-8 Grouting Report Sample

NMB Grouting Report (Example)

Project:
Floor level:
Report by:
Approved by:

Date of Work:
SS Mortar Lot No.:
2 inch Cube Molds:

Temperature:
Ambient
Dry grout
Mixing water
Grout as mixed

Mixing Water per bag:
Flow Measurement:
SS Mortar used (bags):

	SIZE	PLAN	GROUTED	BALANCE	MEMO
NMB Sleeve	5U-X	10	10	0	OK
	6U-X	12	10	2	Ports missing

FIG.-42 SEQUENCE OF GROUTING WORK

Assign a number to each sleeve shown on the drawing, and correspondingly at the job site on the precast element.

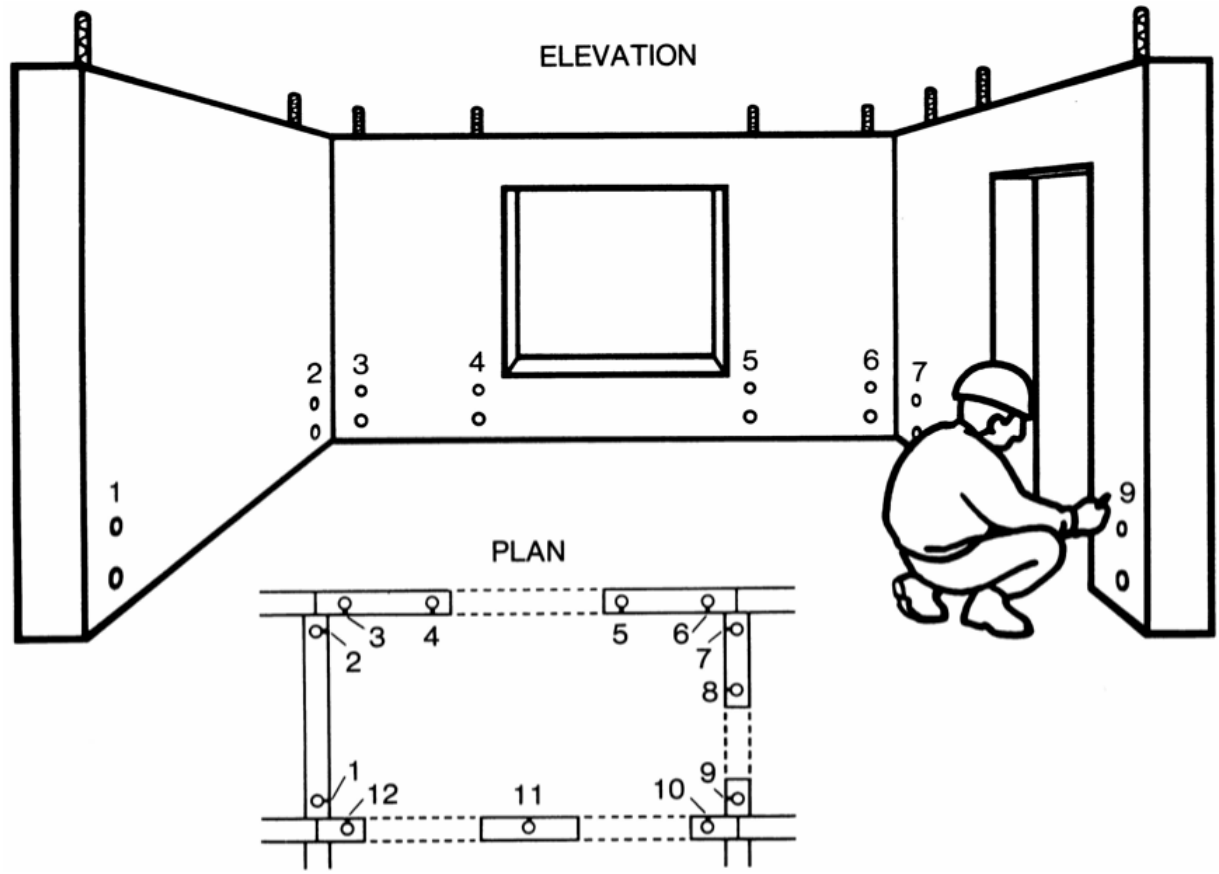

4. MIXING SS MORTAR ® (GROUT)

FIG.-43

1) First place all water into the mixer or bucket and then,
2) Pour SS Mortar® (Grout) slowly into the mixer while stirring with the mixing paddle.
3) After all materials are in the mixer, mix the grout for a minimum of (2.5) minutes.

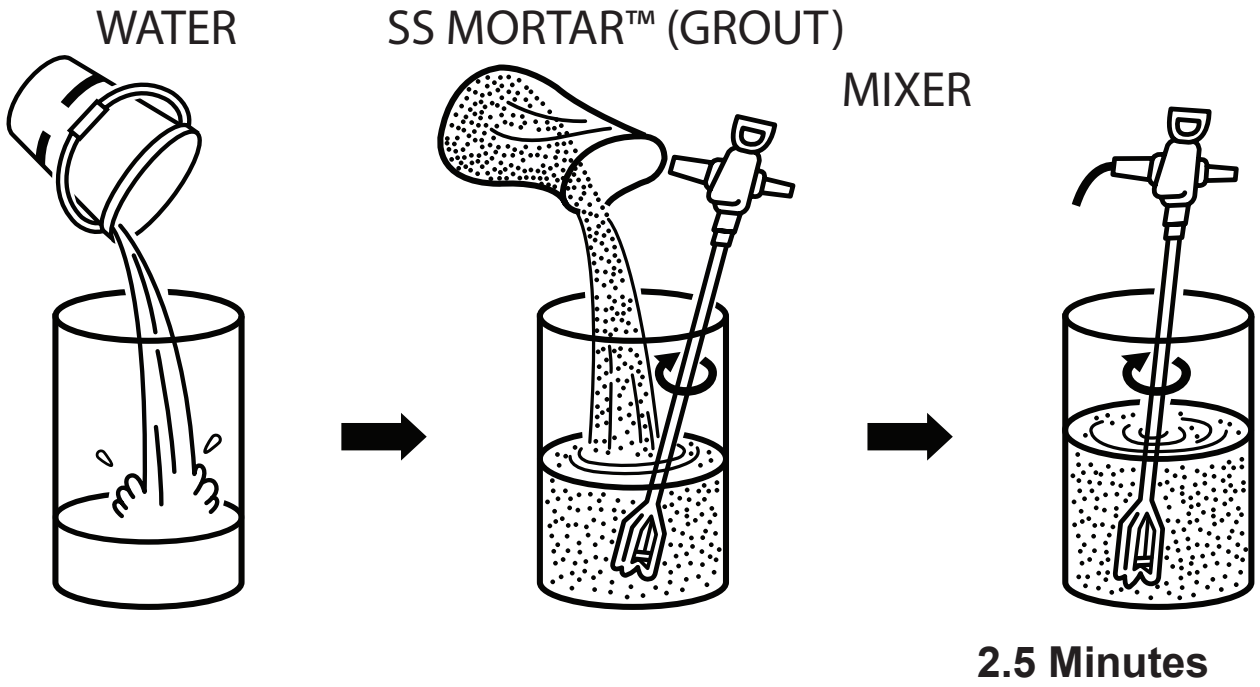

NOTES:

1) Mix SS Mortar® (Grout) to produce the desired mixed consistency for pumping within recommended grout temperatures under jobsite conditions.

2) Use potable water only
The exact amount of water needed to produce the desired consistency will depend on mixing time, the temperature of the grout following mixing and the size of the batch mixed. The water requirements should be established in a test batch by adjusting the initial water to meet the flow requirement as determined through the use of the Flow Guide. The recommended field consistency is 5.0" minimum (127 mm) as determined by use of the Flow Guide.

Suggested amount of mixing water for the initial trial mix to produce this flow is 15.0% by weight of SS Mortar® (Grout). [one gallon (8.337 pounds) per 55 lb bag]. If additional water is required to meet the consistency specification, it should not exceed a maximum of 17.0% by weight of SS Mortar® (Grout). [1.12 gallons (9.337 pounds) or 1 gallon-15 ounces per 55 lb. bag]

3) SS Mortar® (Grout) is designed to be placed at a diameter of spread specified above as determined by use of an Flow Guide, which may be obtained from ChemRex, Inc. To make this test, a 2"diameter x 4"high (50 x 102 mm) cylinder is filled with grout and carefully lifted off a flat nonabsorbent hard surface. The diameter of the puddle is measured with a ruler. It is recommended that consistency be measured for every grouting session.

4) For mixing grout, use a mixer as recommended elsewhere in this manual. Do not mix by hand. Do not add cement, sand, aggregate or admixtures. Do not add more water than specified. Use a full bag unit for each batch. Do not use SS Mortar® (Grout) if the package is damaged. SS Mortar® (Grout) has a shelf life of approximately 12 months when stored in a cool, dry environment. The production code is printed on each bag. Grout which has been stored beyond the expiration date should be discarded. Locate mixing operations as close to the grouting position as possible. Do not leave the mixed grout in the sun.

Failure to mix the materials properly and long enough may cause problems not only with flow and pumping conditions but also with setting time and subsequent strength gain. The mixture should appear uniform and smooth with no lumps.

Check the consistency using the Flow Guide as often as required by the engineer after mixing has been completed.

5) Warm mixing water, not exceeding 90°F (32.2°F), may be used with cold, dry grout or when placing in cold weather. Chilled mixing water, as close to 33°F (0.5°C) as possible, may be used with warm, dry grout or when placing in hot weather.

IMPORTANT NOTE for person in charge of grout inspection:

This is the best time to make 2 inch. cube specimens for the compressive strength test. Use heavy metal molds as specified in ASTM C109. Never use plastic molds. Refer to Engineering Data Sheet GROUTPRO "RECOMMENDED PROCEDURE FOR FIELD SAMPLING AND TESTING SS MORTAR" for details.

FIG-44

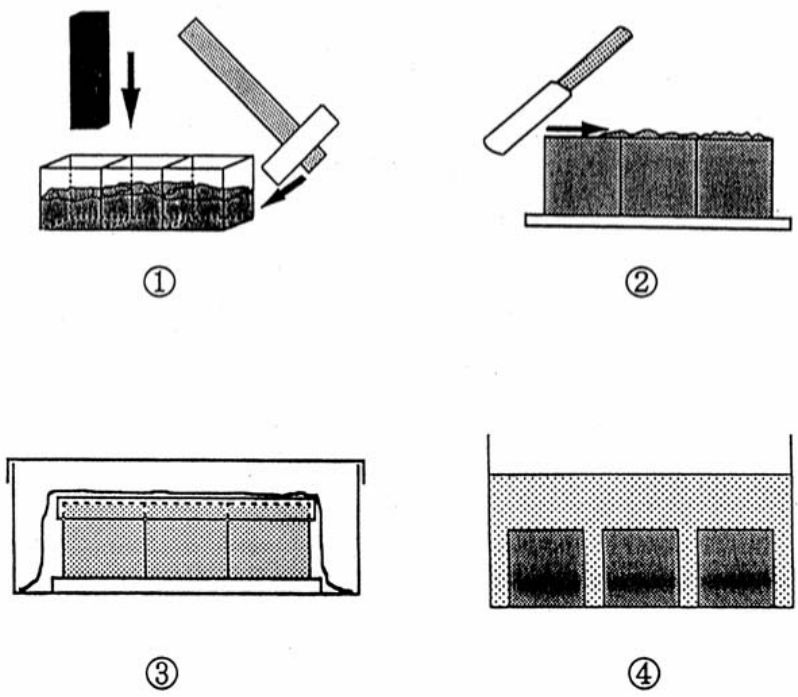

5. SLEEVE GROUTING

PG(Post-Grout) Application with Hand-operated Pump

FIG.-45

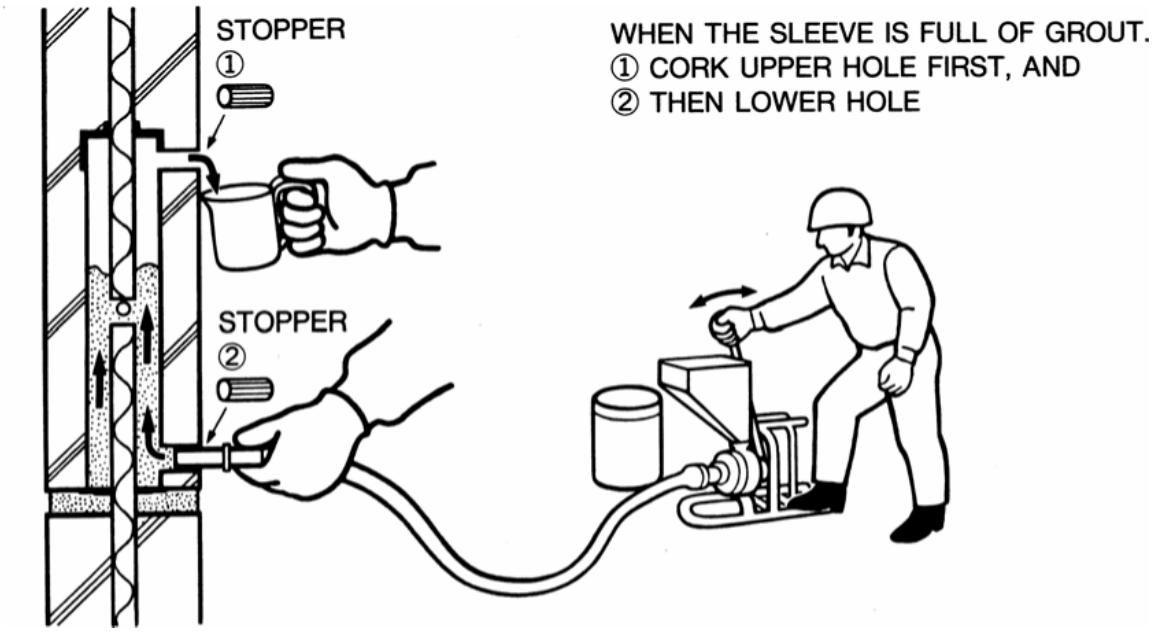

In post-grout applications, pump grout into the inlet tube until it flows freely without air bubbles from the outlet.

(1) Use an appropriate grout or mortar pump as recommended. First, saturate the pump inside with water.

(2) Pour the mixed grout into the hopper of the pump, and operate the pump to push out the water (and cement paste). (Do not use this slurry in the sleeve.)

(3) After confirming that a solid stream of grout (without air bubbles) is coming out of the nozzle, stop pumping and insert the nozzle into the grout inlet tube of the sleeve.

(4) A: Keep pumping the grout into the inlet port continuously and slowly (at the rate of one stroke per second in the case of a hand operated pump) until the grout can be observed coming from the outlet hole in a solid flow. B: Catch the overflow in a cup(return it to the pump hopper later) and seal the outlet hole with a rubber stopper, C: then withdraw the nozzle from the inlet hole and seal it with a rubber stopper.

A

B

C

(5) After stoppers have been inserted, flush away any excess grout remaining on the surface of the grout face.

(6) After removing the stoppers the next day, finish the recess with plain mortar.

(7) When grouting at minimum temperatures, care must be taken to see that the Splice Sleeves and grout temperatures do not fall below 40° F (4.4°C), and that the grout is protected from freezing. Heat should be maintained until the grout in the sleeves has reached a minimum of 1,500 psi (10.3 MPa) compressive strength, as determined by testing 2x2x2 inch cubes. It is recommended to maintain at least 60°F (15°C) to ensure normal overnight compressive strength gain for removing braces.

PRE (Pre-Grout) Application

In pre-grout applications, SS Mortar® is mixed and then poured or pumped into the wide end opening. Rod with a small diameter wire (coat hanger) to remove entrapped air. Always fill sleeves before placing bedding grout. Erectors often test-fit the piece to make sure all dowels fit properly in the sleeves before they are grouted.

FIG.-46 Pre-Grout

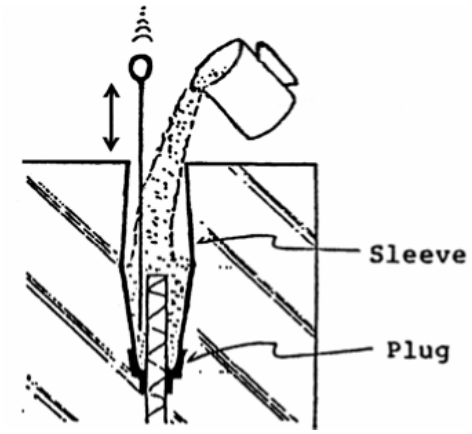

CAUTION:

1) After SS MORTAR® (Grout) has been mixed, use it within the time limits specified by the grout manufacturer.
2) If pumping is interrupted, keep recirculating the mixed grout by operating the pump with the nozzle in the hopper. If shutdown exceeds the time limit specified by the grout manufacturer, discard the grout.
3) Do not remove stoppers until the grout has set.
4) While pumping do not let the grout hopper become empty. Never pump air into the sleeves. Sufficient grout bags should be prepared close at hand (especially for #14 and #18 sleeves which have a large capacity) to ensure continuous grouting.
5) Make sure no sleeve is left ungrouted.
6) Be sure to wash the pump thoroughly after each session or before coffee/lunch breaks.
7) Difficulty in pumping and with premature stiffening may result from grout temperatures outside the range recommended by the grout manufacturer.
8) If a sleeve becomes clogged, try clearing outlet port with stiff wire. If still clogged, then immediately flush with water and try to grout, again. Repeat several times, if necessary.
9) If sleeve is plugged, flush with water and report situation to field engineer for instructions.

6. CLEANING

Check the joint between the precast units during and after grouting work is performed. If grout has leaked out of the joint, remove it immediately by flushing with water.

Exposed SS Mortar ® (Grout) will rust. If rusting is objectionable, exposed grout surfaces should be covered by plain mortar or other coating, if required, after the grout has hardened.

WARNING

SS MORTAR® (GROUT) CONTAINS PORTLAND CEMENT AND SILICA SAND. PORTLAND CEMENT IN COMBINATION WITH WATER MAY CAUSE SKIN IRRITATION, RASH AND ALKALI BURNS. PROLONGED EXPOSURE TO SILICA MAY CAUSE DELAYED LUNG INJURY (SILICOSIS). THERE IS LIMITED EVIDENCE OF CARCINOGENICITY OF CRYSTALLINE SILICA TO HUMANS.

DO NOT BREATH THE DUST. FOLLOW SAFETY AND HEALTH STANDARDS FOR QUARTZ DUSTS.
DO NOT WEAR CONTACT LENSES WHEN WORKING WITH THIS PRODUCT.
REMOVE SOILED CLOTHING AND WASH BEFORE REUSE.

FIRST AID

Eyes:	Flush with water for 15 minutes, lifting upper and lower lids occasionally; seek medical attention.
Skin:	Wash with soap and water. Get medical attention if exposure is extensive.
Inhalation	Remove person to fresh air.

DISPOSAL METHOD

This product, when discarded or disposed of, is not listed as a hazardous waste in Federal regulations. Dispose in a landfill in accordance with local regulations

For additional information or personnel protective equipment, first aid and emergency procedures, refer to the product Material Safety Data Sheet (MSDS) on the jobsite or, call the grout manufacturer.

For medical emergencies only, call ChemTrec, 1-800-424-9300.

7. CURING

Precast units with grouted sleeves should not be moved or loaded before the SS Mortar® develops a cube compressive strength of at least 4000 psi (about 290 kgf/cm^2). For normal temperatures, Engineering Data Sheet GROUTPRO may be used as a reference for curing time, support removal time, loading, and time of starting subsequent erection operations.

Under normal summer time conditions of temperature and curing, grouted sleeves should be cured at least 24 hours or longer before removal of bracing unless cube specimens are tested that show proper minimum compressive strength to transfer load. The determination of a safe removal time of lateral bracing or other support of a precast member is an engineering decision which may not be predetermined by the instructions in this manual.

The capacity of the Splice Sleeves to transfer load is primarily a function of the grout strength, which in turn is dependent on the consistency and curing temperature of the grout material.

It is recommended that the structural engineer be consulted to determine a safe schedule for removal of temporary supports. Under cold weather conditions, it is desirable to make grout specimens, cure them under job-site conditions, and test them at various ages, in accordance with Engineering Data Sheet GROUTPRO.

The mold, with test specimens, should be stored in close proximity to the grouted sleeves, utilizing the same protective means to simulate the same environmental conditions that exist for the grouted sleeve. When SS Mortar® achieves a compressive strength of over 1500 psi (105 kgf/cm^2), it will not be damaged by freezing. Therefore, during cold weather, curing temperature must be maintained above 40°F until the above referenced compressive strength is achieved.

Curing time, support removal time, and the time when additional units may be erected may be determined by testing field-cured grout samples in accordance with Engineering Data Sheet GROUTPRO. Check with the sleeve manufacturer for the latest edition of GROUTPRO.

FIG-48

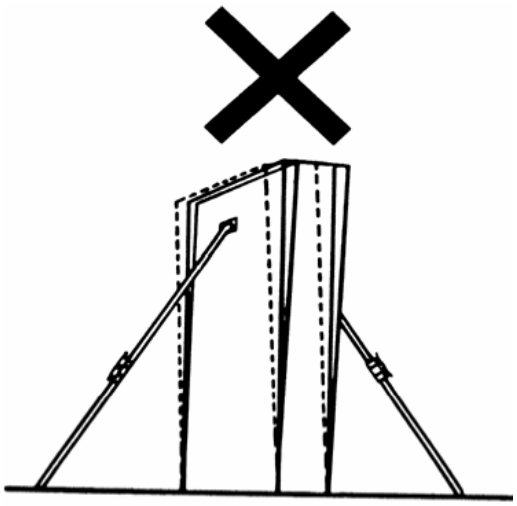

Keep Components undisturbed for at least **24 Hours or until cube specimen tests show minimum compressive strength has been achieved.

**Under cold weather conditions, or where the unsupported member will be subject to unusual loads, support release time should be decided by the structural engineer.

V. TROUBLE-SHOOTING

Table-9 At Factory

TROUBLE	SOLUTION
1. Inlet/outlet ports do not reach the surface	1. Check and mark the position of the ports according to the drawings. 2. Chip out the concrete at the marked positions to find the embedded ports. 3. Blow out the ports with the air compressors or water and confirm that there is a clear passage from the inlet to outlet port.
2. Concrete slurry inside the sleeve	1. Insert a steel rod into the port, and hammer it to chip out or hammer to the bar to shake it off. 2. Blow out the ports with the air compressors or water and confirm that there is a clear passage from the inlet to outlet port.
3. Inlet and/or outlet port is clogged with concrete debris etc. or plastic Hole Seals (sealing caps)	For debris etc.: 1. Insert a steel rod into the ports and hammer it to clear the port. For Hole seals: 1. Use a hooked rod to scrape seals out of the ports. 2. Repeat step 3 of Item 1.
4. Protruding bar short	1. Weld a small nut to compensate the length. (See page V-2 for detail) or weld a bar extension (AWS D1 .4) to achieve proper length. 2. Make sure the bar in the sleeve does not break and pass through the Rebar Stop. If it does, consult the engineer of record for decision.
5. Bar in the sleeve does not reach Rebar Stop	1. Measure the protruding length of opposite end of bar to calculate how much embedment has secured. 2. If it does not secure the minimum required length, consult the engineer of record for decision.

Note: To prevent above troubles, do thorough inspection (See page Section III-16 before pouring concrete.

Table-10 At Erection of Concrete Members

TROUBLE	SOLUTIONS
1. Field dowels from foundation short	1. Weld a small nut to compensate the length of the bar. (See below for detail). 2. If shorter than 5.0D, then weld a bar extension (AWS D1.4)
2. Field dowel mislocation	1. Chip down the concrete, bend the bar over and then back to vertical. 2. If more than a bar diameter out, cut it off, and drill a new hole to epoxy anchor dowel with proper length.
3. Field dowels from foundation too long	1. Cut to proper length by sawing or torch-cutting.

Note: To prevent above troubles, use appropriate template for foundation dowels (See page IV-2 or video)
The cast-in-place contractor and his supervisors should be made aware of the need for accurate location and length of the dowels.

1) In cases where the protruding bar length measured from the top of the shim is longer than the specified maximum length, it may be shortened by sawing or torch-cutting.

2) In cases where the protruding bar length is shorter than the specified minimum length, but not less than 5 times bar diameter, it is recommended that a steel nut or ring be welded to the end of the bar, to permit development of the strength of the splice.

NOTE: Welding strength and quality shall conform to the local Welding Code.

FIG.-48 Ilustration of Sleeve with welding nut

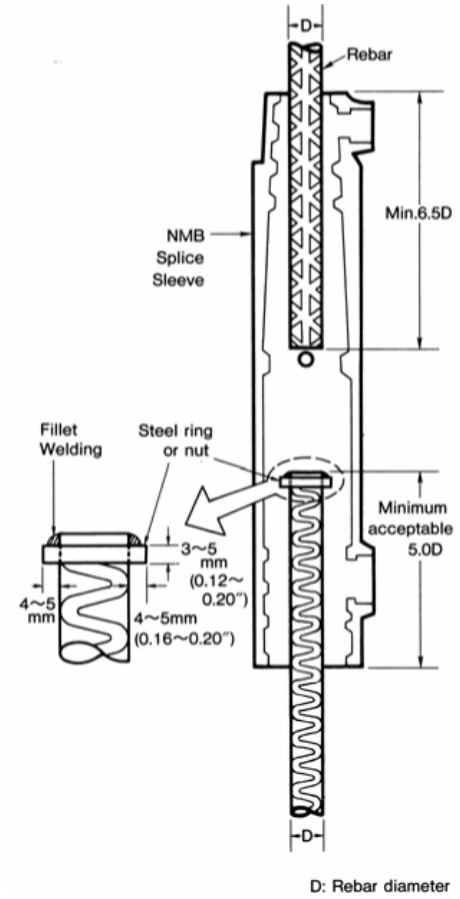

During grouting

1) Preparation:

The following equipment should be immediately available during grouting:

(1) Pressurized sprayers (18 liter or larger capacity filled with water, a garden sprayer, etc.) and/or
(2) Water hose with high-pressure water supply.

2) Flushing out and regrouting procedure

If clogging occurs during grouting, immediately flush out the grout from sleeves with water by using the sprayer and/or the hose. First, insert the sprayer and/or the hose into the OUTLET hole, and let the water flush into the sleeve until clean water comes out of the inlet hole. Then, transfer the nozzle from the outlet to INLET hole.

After flushing, remove the water remaining in the sleeve with compressed air. Determine the cause of trouble and make the necessary correction before grouting.

During regrouting, reduce the pumping speed to half the usual rate (1 stroke each 2 seconds in case of hand operated pump). After grout comes from the outlet hole, continue additional pumping strokes until a clean stream of grout without air bubbles is observed.

Refer to the next page for Trouble shooting at grouting.

Table-11 At Grouting

	TROUBLE	SOLUTION
	1. Inlet/outet ports do not reach the surface.	1. Check and mark the position of the ports according to the drawings. 2. Chip out the concrete at the marked positions to find the embedded ports. 3. Blow out the ports with the air compressors and confirm that there is a clear passage from the inlet to outlet port.
	2. Due to omission of Washers. The inlet port is clogged with bedding mortar from the joint.	1. Insert a steel rod into the port, and hammer it to chip out the mortar. 2. Repeat step 3 of item 1.
	3. Inlet and/or outlet port is clogged with concrete debris etc. or plastic Hole Seals (sealing caps)	For debris etc.: 1. Insert a steel rod into the ports and hammer it to clear the port. For Hole seals: 1. Use a hooked rod to scrape seals out of the ports.
	4. Concrete, mortar or other obstruction has intruded into the sleeve from the outlet port, and has clogged inside.	1. Insert a steel rod into the port, and hammer it to break out the obstruction. If this is unsuccessful, drill a new hole for an alternate port in the vicinity of the outlet port. 2. Repeat step 3 of item 1.
	5. Leakage during pumping of grout from the joint due to incomplete mortar bedding.	1. Seal the joint with rags, polyurethane, mortar, etc. 2. Clean the inside of the sleeve with water (preferably high pressure). 3. Confirm a clear passage by blowing with air. 4. Re-grout.
	6. Clogging has occurred inside the sleeve such as at point marked during pumping operation.	1. Clean the inside with high pressure water. 2. After confirming a clear passage by blowing with air, start re-grouting at about half speed of the normal operation.
	7. Rebar is too close to the outlet, restricting grout flow.	1. Insert heavy punch into outlet grout tube and strike with a sledge hammer to reduce restriction.

SUPPLEMENTAL INFORMATION

From time to time, revisions will be made to this Manual. If the user has any questions as to whether or not this manual contains the latest information, please contact Splice Sleeve North America, Inc.

Engineering Data Sheets provide the user with various technical applications/ideas depending on their project. A list of Engineering Data Sheets is attached. Copies of the data sheets are available from Splice Sleeve North America, Inc.

LIST OF ENGINEERING DATA SHEET

SPLICE SLEEVE NORTH AMERICA, INC.

CODE	TITLE
CEA-1	COLUMN ERECTION AID
CEA-2	COLUMN ERECTION AID
CONT-1	CONTINUITY CONNECTION OVER PIERS BETWEEN PRECAST CONCRETE BOX BEAMS
DES-1	DESIGN, SPECIFICATION, INSTALLATION
GROUTPRO	RECOMMENDED PROCEDURE FOR FIEILD SAMPLING AND TESTING SS MORTAR
H-2	HORIZONTAL SYSTEM
MRBB-1	P/C BEAMS WITH OPENING FOR SLEEVES AND CIP CLOSURE
MRBB-2	BEAM TO BEAM
MRBC	BEAM TO COLUMN WITH H SLEEVES IN BEAM
MRBT-1	BEAM TO COLUMN BENT
MRBT-2	BEAM TO COLUMN BENT(BRIDGE)
MRCB-1	P/C TEE-SHAPE BEAM COLUMN
MRCB-2	P/C TEE-SHAPE BEAM COLUMN
MRCBC-1	BEAM TO COLUMN
MRCBC-3	BEAM TO COLUMN
MRCBC-4	BEAM TO COL: CIP TOPPING & JOINT
MRCC-1 ,-2	COL-TO-COL: P/C COLUMNS
MRCF-1	MOMENT RESISTANT COLUMN-TO-FOUNDATION
MRWF-1	MOMENT RESISTANT WALL-TO-FOUNDATION
PIA-1	PRECAST INTEGRAL ABUTMENT (BRIDGE)
REHAB-3	NMB FOR HORIZONTAL AND VERTICAL REPAIRS AND EXTENSIONS OF REBARS
STWW-1	MULTIPLE ELEMENT/FLOOR SHEAR TOWERS
STWW-1A	HORIZONTAL BAR CONNECTIONS
STWW-2	SINGLE RECTANGULAR BOX SHEAR TOWERS
STWW-3	HOLLOW COLUMNS AND CIRCULAR RING SHEAR TOWERS
STWW-4	WALL-TO-WALL WITH TEE BEAM FLOOR
STWW-5	SHEAR TOWER CONNECTIONS WITHOUT WELDING
STWW-6	MULTIPLE ELEMENT/FLOOR SHEAR TOWERS
SWF	SHEAR WALL TO FONDATION
TEST:SS	TESTING PROGRAM FOR THE NMB SPLICE SLEEVE
WFW-1	WALL-TO-WALL WITH TOPPED PRECAST STAY-IN-PLACE FORMS
WFW-2A-1	WALL-TO-WALL WITH TOPPED PRECAST STAY-IN-PLACE FORM
WFW-2B	WALL-TO-WALL WITH TOPPED HOLLOW-CORE PLANK
WFW-2B-1	WALL-TO-WALL WITH HOLLOW-CORE PLANK
WFW-3	WALL-TO-WALL WITH CAST-IN-PLACE FLOOR
WW-1	WALL-TO-WALL WITHOUT FLOOR

For technical questions, please call: 864-553-1344
Jim Schroder
jimschroder@bellsouth.net
1200 Woodruff Road, A-3
Greenville, SC 29607

For orders and other inquiries, please call:

SPLICE SLEEVE NORTH AMERICA, INC.
38777 West Six Mile Road, Suite 106
Livonia, MI 48152

Phone: 877-880-3230
734-838-0420
Fax: 734-838-0422

Toshi Yamanishi, VP/GM
E-mail: tyamanishi@splicesleeve.com

Brenda Ertman, Customer Service Rep.
E-mail: bertman@splicesleeve.com

SS MORTAR® (GROUT) ENGINEERING DATA SHEET: SSM-J © 2011

SS Mortar® (Grout) manufactured by Splice Sleeve Japan, Ltd. is a special cementicious non-metallic filler grout developed for the NMB Splice-Sleeve® System. The use of any other grout will void all warranties, expressed or otherwise implied.

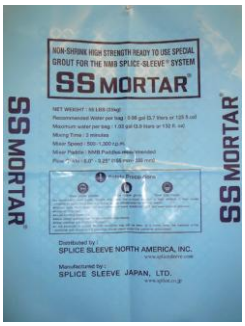

SS Mortar® (Grout) is packaged in 55-lbs (25-kg) moisture resistant bags. The required quantity of SS Mortar® shall be calculated from the table below.

High Early Strength: The grout in a flowable consistency will attain above **4,000-psi** in less than **24 hr**. at a temperature of 68°F (20°C). Rapid strength gain allows erection to continue.

High Ultimate Strength: The grout attains **14,000-psi** compressive strength in 28 days at 68°F (20°C).

SS Mortar® is a ready-to-use formulation requiring only the proper amount of water, which is suggested at 0.98 gal. = 125 fl. oz. = 3.7 liters per bag. The maximum water is 1.03 gal. = 132 fl. oz. = 3.9 liters.

Mixing time is a minimum of two and a half **(2½) minutes** with electric mixer of 500 to 1,300 rpm.

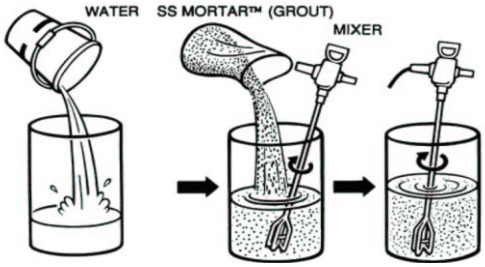

Required quantity of SS Mortar® for NMB Splice-Sleeve®

REBAR Size		Splice-Sleeve	SS Mortar	
U.S.	Metric	Model	lb/sleeve	Sleeves/Bag
#5	16mm	5 U-X	1.26	43
#6	20mm	6 U-X	1.76	31
#7	22mm	7 U-X	2.65	20
#8	25mm	8 U-X	3.46	15
#9	28mm	9 U-X	3.95	13
#10	32mm	10 U-X	4.94	11
#11	35mm	11 U-X	6.02	9
#11	35mm	SNX 11	5.71	9
#11	35mm	A 11 W	6.99	7
#14	40mm	14 U-X	9.19	5
#18	57mm	18 U .	25.31	2

Grout quantities shown in the table are in dry powder weight of the grout to fill the space inside the sleeve after both rebars have been inserted into the sleeve. From experience, additional overage is included to provide for minimum grout tubes, waste and loss in the field.

Always mix full bags: no partial bags. The above overage does not cover large amounts of "left over" waste from the bucket, pump, hose and elsewhere. For small jobs or many separate grouting sessions, it is recommended you consider additional grout (typically 10% to 25%). It is better to have a bit too much than a bit too little and delay the job.

Nissco SS Mortar should be stored in moderate/cool and dry conditions. It has a "freshness" bag life of one (1) year. Bags have a date stamp on the top using letters for the year then month then numbers for the day (See chart below and pictures & examples right)

Year	01	02	03	04	05	06	07	08	09	10		
	A	B	C	D	E	F	G	H	I	J		
Month	1	2	3	4	5	6	7	8	9	10	11	12
	A	B	C	D	E	F	G	H	I	J	K	L
Day	As a number from 1 to 31											

HF 23 = 08 - 06 - 23 = 23rd June 2008

JK 30 = 10 - 11 - 30 = 30th November 2010

AI 21 = 01 - 09 - 21 = 21st September 2011

©2008 SPLICE SLEEVE NORTH AMERICA, INC.

SS Mortar® (Grout) Performance Data

Nissco SS Mortar® (Grout) - Fresh Mortar Test Results

Water volume	Mix Temp	Curing Temp	Set Time Hr-Min Initial	Set Time Hr-Min Final	Flow Guide	Bleeding %
0.98 gal	**68°F**	**41°F** (5°C)	**9hr 31min**	**13hr 35min**	6 1/4" (160mm)	0.0%
3.7 liters	20°C	**68°F** (20°C)	**4hr 18min**	**5hr 55min**	6 5/8" (170mm)	0.0%
		86°F (30°C)	**2hr 23min**	**3hr 20min**	6 1/2" (165mm)	0.0%

Nonmetallic, Nissco SS Mortar must be used in when the **surrounding concrete and the sleeve temperature is between 35°F to 140°F (2°C to 60°C).** Freezing grout before it is above 1,500 psi will deplete strength. The grout should be **mixed and pumped between 50°F and 95°F (10°C to 35°C)**. In extreme temperatures warm or iced water can be added to adjust mortar temperature. Per the table below, strength gain is related to temperature thus freezing/very cold conditions may require a heating plan until connection strength is reached allowing continued erection and structural specifications. (See Splice Sleeve User's Manual and/or call Splice Sleeve directly).

Nissco SS Mortar® (Grout) - Compressive Strength Time vs Temperature

Curing Temp	Compressive Strength (psi) 12 hr	18 hr	1 day	3 days	7 days	28 days
41°F	---	583	1,465	6,117	8,193	12,518
68°F	810	2,930	4,424	8,008	10,313	14,538
86°F	2,688	5,220	7,112	9,929	11,479	14,609

Consistency Flow tests are run using a "Flow Guide". The diameter of the "puddle" should be between 155mm (6") minimum to 235mm (9 ¼") maximum. The Flow Guide consists of a 2 in. (50mm) diameter x 4 in. (100 mm) cylinder placed in the center of a level, smooth, non-absorbent surface. After filling and lifting the cylinder, the diameter of the resulting "puddle" of grout is measured. Details of the procedure are described in Engineering Data Sheet GROUTPRO: "Recommended Procedure for Field Sampling and Testing SS Mortar®".

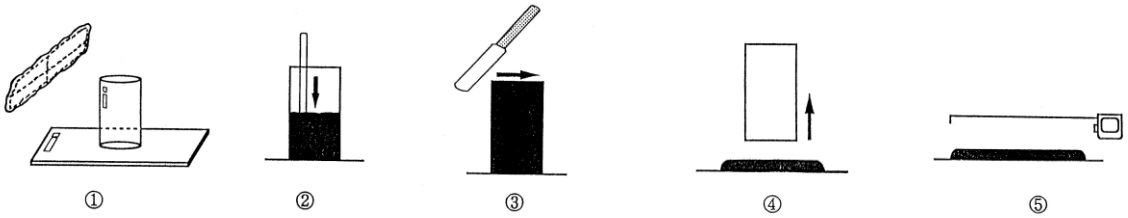

Related documents:

- Material Safety Data Sheet: SS Mortar®
- Users' Manual for NMB Splice-Sleeve® System
- GROUTPRO-N1: Recommended Procedure for Field Sampling & Testing SS Mortar®
- Splice Sleeve "Grout Operation" slideshow

©2008 SPLICE SLEEVE NORTH AMERICA, INC.

DESIGN CALCULATIONS FOR PRECAST CONCRETE RIGID BRIDGE

ROUTE 106 BRIDGE REPLACEMENT
T.H. 61 (KENDALL ROAD)
WOODSTOCK, VT

MILLER CONSTRUCTION INC.

CONCRETE SYSTEMS, INC.
9 COMMERCIAL STREET
HUDSON, NH

CSI Drawing No C22624 - LO1

STATE OF VERMONT
CHRISTOPHER M. VICK
NO. 77928
Structural
LICENSED
PROFESSIONAL ENGINEER
4/11/16

TABLE OF CONTENTS

Section #	Description	Total Pages
1	Summary of Design Information	1
2	Mathcad Calculations: 42.42' x 4.583' Rigid Bridge, 0'-2' Earth Cover, HL93	15
3	STAAD PRO Output: 42.42' x 4.583' Rigid Bridge, 0'-2' Earth Cover, Fixed, HL93 incl. SF & BM Diagrams	47
4	STAAD PRO Output: 42.42' x 4.583' 3 Rigid Bridge, 0'-2' Earth Cover, Spring, HL93 incl. SF & BM Diagrams	47
5	CSI Wing wall 1 Calculations	13
6	CSI Wing wall 2 Calculations	12
7	CSI Wing wall 3 Calculations	12
8	CSI Wing wall 4 Calculations	16
9	Guardrail Curb Calculations	6
10	Approach Slab Shelf Calculations	2
11	Bridge Load Rating	65
	TOTAL PAGES IN SET	236

9 Commercial Street Hudson, New Hampshire 03051 Phone (603) 889-4163
Fax Number: Precast Sales (603) 889-0039
Fax Number: Manhole Design and Engineering (603) 598-1344

Section 1

Summary of Design Information

REFERENCES:

AASHTO LRFD Bridge Design Specifications
ASTM C1504 Standard Specifications for Precast Reinforced Concrete 3 Sided Structures for Culverts, Storm Drains and Sewers
ACI 318 Building Code Requirements for Structural Concrete
NPCA Quality Control Manual for Precast Plants
Plans: Route 106 Bridge replacement T.H. 61 (Kendall Road) Woodstock, VT
Sheet 1 of 50 to 33 of 50
Specifications:

COMPUTER PROGRAMS:

MATHCAD
STAAD PRO
CSI Wing Wall Spreadsheet

DESIGN PARAMETERS:

Concrete:
Design strength f'c = 5000 psi
Unit weight = 150 pcf
Reinforcing:
Yield strength fy = 60,000 psi
Cover to reinforcing = See Drawings

Soil: *Unit weight = 140 pcf*
Lateral earth pressure coefficient (max.) = .50
Lateral earth pressure coefficient (min.) = .25

Earth Cover: *0' to 2'*

Live Load: *HL93*

Section 2
Mathcad Calculations:
42.42’ x 4.583’ Rigid Bridge,
0’-2’ Earth Cover, HL93

LRFD METHOD
42 ft x 4.583ft Rigid Bridge
HL93; *Earth Cover : 0ft -2ft*

Reference Dwg: R22624-LO1

REFERENCES:

1. ASTM C1504 Standard Specification for Precast Concrete 3-Sided Culverts, Storm Drains and Sewers;
2. AASHTO LRFD Bridge Design Specifications
3. Attachment A: STAAD.Pro Computer Output for Culvert; Fixed Support in Global X-Dir. at Joint 2 and Bending Moment & Shear Force Diagrams - HL93
4. Attachment B: STAAD.Pro Computer Output for Culvert; Spring Support (96 kips/ft/ft of width) in Global X-Dir. at Joint 2 and Bending Moment & Shear Force Diagrams - HL93

DESIGN PARAMETERS:

$\gamma_w := 62.4 \frac{lbf}{ft^3}$ unit weight of water

$\gamma_c := 150 \frac{lbf}{ft^3}$ unit weight of concrete

$\gamma_e := 140 \frac{lbf}{ft^3}$ unit weight of earth

$DE_1 := 0$ ft Depth of earth Cover -Min

$DE_2 := 2.0$ ft Depth of earth Cover -Max

$DE_{ave} := \frac{DE_1 + DE_2}{2} = 1$

$L_T := 10in$ Length of tire contact area -parallel to span

$K_{max} := .5$ max. earth pressure coefficient

$LLDF := 1.0$ factor for distribution of live load with depth of fill

$K_{min} := .25$ min. earth pressure coefficient

Geometry:

$ClearSpan := 42.42ft$ ClearSpan

$ClearRise := 4.583ft$ ClearRise

Member Properties:

$b := 12in$ design section width

$t_{tMin} := 17in$ Min. top slab thickness

$t_{wMin} := 18in$ Min wall thickness

$t_{tMax} := 22in$ Max.top slab thickness at the Intersection with the Wall

$t_{wMax} := 25in$ Max wall thickness

$Span := ClearSpan + t_{wMin} = 43.92ft$

$L_{Section} := 7.5ft$ Section Length

$Rise := ClearRise + t_{tMin} - t_{tMax} = 4.17ft$ Dimension to Calculate Soil Pressure for the Model

$t_{Min} := \frac{ClearSpan + 10ft}{30} = 1.747ft$ Estimate Slab Thickness AASHTO Table 2.5.2.6.3-1

$F_e := 1 + 0.2 \frac{DE_{ave} \cdot ft}{ClearSpan + 2t_{wMin}} = 1.004$ **Soil-Structure Interaction Factor** AASHTO Eqn 12.11.2.2.1-2

$F_{emax} := \min(F_e, 1.15) = 1.004$

9 Commercial Street
Hudson, NH
(800) 342-3374
Fax (603) 598-1344

Dead Load: (DL)

$D_{pav} := F_{emax} \cdot \gamma_e DE_{ave} \cdot ft \cdot 1ft = 140.616 \cdot \frac{lbf}{ft}$ Dead load

Live Load: Design Truck

Multiple presence factor $M := 1.2$

$F_1 := 8000lbf$ Axle load 1 $F_{23} := 32000lbf$ Axle load 2 & 3

$Im := 33(1.0 - 0.125 \cdot DE_1)$ $Im = 33$ Dynamic load allowance $I_i := 1 + \frac{Im}{100}$ $I_i = 1.33$

$I := \max(1., I_i)$ $I = 1.33$

$E_{perp} := 96in + \left(1.44 \cdot \frac{ClearSpan}{12}\right)$ $E_{perp} = 13.09ft$ Distribution - perpendicular to span

$E_{para} := L_T + (LLDF \cdot DE_1 \cdot in)$ $E_{para} = 0.833ft$ Distribution - parallel to span

$D := 6ft$ Wheel spacing across a Design truck $D1 := 14ft$ Typical Axle spacing of a Design truck

$P1 := \frac{M \cdot I \cdot F_1 \cdot ft}{E_{perp}}$ $P1 = 975.4 \cdot lbf$ $P2 := \frac{M \cdot I \cdot F_{23} \cdot ft}{E_{perp}}$ $P2 = 3.9 \times 10^3 \cdot lbf$

Live Load: Design Tandem

$F_{34} := 25000lbf$ Axle load 3 & 4 Multiple presence factor $M := 1.2$

$D := 6ft$ Wheel spacing across a Design tandem

$P3 := \frac{M \cdot I \cdot F_{34} \cdot ft}{E_{perp}}$ $P3 = 3.048 \times 10^3 \cdot lbf$ $D3 := 4ft$ Distance between Axles of a Design tandem

Live Load: Design Lane load :

Applicable only when Span is greater than 15ft

$W_{10} := 640 \frac{lbf}{ft}$ Design Lane load over 10 ft width

$W_1 := \frac{W_{10}}{10} = 64 \cdot \frac{lbf}{ft}$ Design Lane load per ft run

Lateral Earth Pressure:

$H1 := DE_{ave} \cdot ft + t_{tMax} = 2.833ft$ soil depth at top of wall

$H2 := H1 + Rise = 7ft$ soil depth at bottom of wall

$LEPMIN := K_{min} \cdot \gamma_e \cdot 1ft = 35 \cdot \frac{lbf}{ft^2}$ minimum lateral earth pressure

$LEPMAX := K_{max} \cdot \gamma_e \cdot 1ft = 70 \cdot \frac{lbf}{ft^2}$ maximum lateral earth pressure

Minimum **(EMIN)**

$w_{et} := H1 \cdot LEPMIN = 99.167 \cdot \frac{lbf}{ft}$ top of wall $w_{eb} := H2 \cdot LEPMIN = 244.988 \cdot \frac{lbf}{ft}$ bottom of wall

Maximum **(EMAX)**

$w_{et} := H1 \cdot LEPMAX = 198.333 \cdot \frac{lbf}{ft}$ top of wall $w_{eb} := H2 \cdot LEPMAX = 489.977 \cdot \frac{lbf}{ft}$ bottom of wall

Approaching Wheel Load (Surcharge) : (AWL)

$w_a := 4 \cdot ft \cdot \gamma_e \cdot ft \cdot K_{max} = 280 \cdot \frac{lbf}{ft}$ Uniform on wall

Internal Fluid Pressure: (IFP)

$w_{ib} := \gamma_w \cdot ClearRise \cdot 1ft = 285.979 \cdot \frac{lbf}{ft}$ bottom of wall

Design Load Combinations:

The following load combinations are considered:

1. ***SPRING SIZE RATING (Load Cases 500's & 5000's):***
   1.0DL +1.0LL
2. ***DEFLECTION CHECK (Load Cases 600's & 6000's):***
   1.0LL
3. STRENGTH I
   For the Maximum Moments & Forces in the Culvert:
   - ***1.3 DL+ 1.75LL + 1.35Emax+1.75AWL - For Max. Outside the Culvert (Negative) Moment in the walls and slab) - Load Cases 100's & 1000's;***
   - ***1.3 DL+ 1.75LL + 1.0Emin+1.0Wins - For Max. Inside of the Culvert (Positive) Moment in the slab -- Load Cases 200's & 2000's.***
4. ***Cracking Load Combinations:***
   - ***1.0 DL+ 1.0LL + 1.0Emax+1.0AWL - For Max. Outside the Culvert (Negative) Moment in the walls and slab) - Load Cases 300's & 3000's;***
   - ***1.0 DL+ 1.0LL + 1.0Emin+1.0 IFP - For Max. Inside of the Culvert (Positive) Moment in the slab - Load Cases 400's & 4000's.***
5. ***Live Load Combinations:***
   - ***1.0LL + 1.0Emax+1.0AWL - For Max. Outside the Culvert (Negative) Moment in the walls and slab) - Load Cases 700 & 7000;***
   - ***1.0LL + 1.0Emin+1.0Wins - For Max. Inside of the Culvert (Positive) Moment in the slab - Load Cases 701 & 7001.***
6. ***Dead Load Combinations:***
   - ***1.0DL - For Max. Outside the Culvert (Negative) Moment in the walls and slab) - Load Cases 800's & 8000's;***

Where,

- ***DL - Dead Load;***
- ***LL - Live Load;***
- ***E - Soil Pressure Load;***

- ***AWL - Approaching Wheel Load (Surcharge);***
- ***Wins - Inside Water Pressure Load.***

42.42ft x 4.583 ft - Rigid Bridge : LRFD Reinforcement Design

DESIGN PARAMETERS

$Span := 42.42ft$ Clear Span $Rise := 4.583ft$ Clear Rise $f_c := 5000psi$ $f_y := 60000psi$

$t_{min} := 17in$ Top Slab thickness (Min) $t_{wMin} := 18in$ Min wall thickness $b_v := 12in$ Width

$t_{max} := 22in$ Top Slab thickness (Max) $t_{wMax} := 25in$ Max wall thickness

STAAD.Pro ANALYSIS RESULTS:

Att. No	X-Dir. Support Conditions kips/ft	Max. Suppt Displ. (In)	SlabNegative (Outs. Face) Moment (ft-k)	Slab Positive (Ins. Face) Moment (ft-k) End span	Slab Positive (Ins. Face) Moment (ft-k) mid span
"A":	HL93 Fixed	$d := 0$	$M_{uSNf} := 127.63 \cdot ft \cdot kip$	$M_{uSPef} := 9.23 \cdot ft \cdot kip$	$M_{uSPf} := 73.89 \cdot ft \cdot kip$
"B":	HL93 Sprin g	$d := 0.815in$	$M_{uSNs} := 74.43 \cdot ft \cdot kip$	$M_{uSPes} := 29.75 \cdot ft \cdot kip$	$M_{uSPs} := 172.28 \cdot ft \cdot kip$

Wall Negative (Outs. Face) Moment (ft-k)	Slab Shear (k) (at the ends)	Slab Shear (k) (mid span)	Wall Shear (k) @ 0.9d
$M_{uWf} := 135.19 \cdot ft \cdot kip$	$V_{uSef} := 19.77kip$	$V_{uSf} := 15.14 \cdot kip$	$V_{uWf} := 30.02kip$
$M_{uWs} := 81.20 \cdot ft \cdot kip$	$V_{uSes} := 21.16kip$	$V_{uSs} := 15.14 \cdot kip$	$V_{uWs} := 18.58kip$

$M_{uSN} := max(M_{uSNf}, M_{uSNs})$ $M_{uSN} = 1.28 \times 10^5 \cdot ft \cdot lbf$ Max Negative Moment in Top Slab

$M_{uSPe} := max(M_{uSPef}, M_{uSPes})$ $M_{uSPe} = 2.97 \times 10^4 \cdot ft \cdot lbf$ Max Positive Moment in Top Slab (End Span)

$M_{uSP} := max(M_{uSPf}, M_{uSPs})$ $M_{uSP} = 1.72 \times 10^5 \cdot ft \cdot lbf$ Max Positive Moment in Top Slab

$M_{uW} := max(M_{uWf}, M_{uWs})$ $M_{uW} = 1.35 \times 10^5 \cdot ft \cdot lbf$ Max Negative Moment in Wall

$V_{uSe} := max(V_{uSef}, V_{uSes})$ $V_{uSe} = 21.16 \cdot kip$ Max Shear in Top Slab (End Span)

$V_{uS} := max(V_{uSf}, V_{uSs})$ $V_{uS} = 15.14 \cdot kip$ Max Shear in Top Slab

$V_{uW} := max(V_{uWf}, V_{uWs})$ $V_{uW} = 30.02 \cdot kip$ Max Shear in Wall Junction

TOP SLAB, TOP REINFORCEMENT; End span
Shear Capacity

$t_{max} = 22 \cdot in$ $\quad c := 2.5in$ rebar clear distance $\quad d_b := 0.875in$ bar diameter

$f_c := 5 \ ksi$

$d := t_{max} - c - \frac{d_b}{2}$ $\quad d = 19.06 \cdot in$ $\quad \beta := 2$

$d_{v1} := 0.9 \cdot d$ $\quad d_{v1} = 17.16 \cdot in$

$d_{v2} := 0.72 \cdot t_{max}$ $\quad d_{v2} = 15.84 \cdot in$ $\quad d_v := max(d_{v1}, d_{v2})$

$\phi V_c := .9 \cdot .0316 \cdot \beta \cdot \sqrt{f_c} \cdot ksi \cdot b_v \cdot d_v$ $\quad \boxed{\phi V_c = 2.62 \times 10^4 \cdot lbf}$

$V_{uSe} = 21.16 kip$ $\quad if(\phi V_c > V_{uS}, "OK", "NG") = "OK"$

Minimum Reinforcement:

Check Minimum Reinforcement, Ratio of Reinforcement Area to GROSS Concrete Area:

***** 3-Sided Culvert - AASHTO 12.14.5.8**
Ast/Agross = 0.002:
Primary reinforcement in the direction of the span, at all cross sections subject to flexural tension, at the inside face of walls, and in each direction at the top of the slabs if cover <2ft.;

$A_{sMin} := 12in \cdot t_{max} \cdot 0.002$ $\quad A_{sMin} = 0.528 \cdot in^2$

TOP SLAB, TOP REINFORCEMENT; End Span
- Use the same Reinforcement as in the Wall;
Negative (Outside Face) Moment:

$c = 2.5 \cdot in$ rebar clear distance $\quad d := t_{max} - c - \frac{d_b}{2}$ $\quad d = 19.06 \cdot in$

$A_s := 1.60in^2$ **#7 @ 4.5"** $\quad f_c := 5000 \ psi$ $\quad SpacingUsed := 4.5$

$f_y := 60000$ $\quad a := \frac{A_s \cdot f_y}{.85 \cdot f_c \cdot 12in}$ $\quad a = 1.882 \cdot in$ $\quad f_y := 60000psi$

$\phi M_n := .95 \cdot A_s \cdot f_y \cdot \left(d - \frac{a}{2}\right)$ $\quad \boxed{\phi M_n = 1.377 \times 10^5 \cdot ft \cdot lbf}$ Negative Moment Capacity

$M_{uSN} = 1.28 \times 10^5 \cdot ft \cdot lbf$ $\quad if(\phi M_n > M_{uSN}, "OK", "NG") = "OK"$

AASHTO Crack Control: End Span - Top Slab (Critical Ms)

***** Culvert - AASHTO 5.7.3.4 & 12.14.5.7**

$M_s := 84290 \cdot ft \cdot lbf$ Service Load Moment

$N_s := 23530 lbf$ Axial thrust at Service limit state - (Value Concurrent with Ms)

$e := \frac{M_s}{N_s} + \left(d - \frac{t_{max}}{2}\right)$ $e = 51.05 \cdot in$

$j := 0.74 + 0.1\left(\frac{e}{d}\right)$ $j = 1.01$ $j_{max} := .9$ $j1 := min(j, j_{max})$ $j1 = 0.9$

$i := \frac{1}{1 - \frac{j \cdot d}{e}}$

$f_s := \frac{M_s + N_s \cdot \left(d - \frac{t_{max}}{2}\right)}{A_s \cdot j1 \cdot i \cdot d}$ $f_s = 27.29 \cdot ksi$ Reinforcement stress under service load condition

$d_c := c + \frac{d_b}{2}$ $d_c = 2.94 \cdot in$

$\gamma_e := 0.75$ Class 2 Exposure factor

$\beta_s := 1 + \frac{d_c}{0.7(t_{max} - d_c)}$ $\beta_s = 1.22$

$SpacingUsed = 4.5$

$Spacing := \frac{700 \cdot \gamma_e}{\beta_s \cdot \frac{f_s}{ksi}} - 2\frac{d_c}{in}$ $Spacing = 9.89$

$if(Spacing > SpacingUsed, "OK", "NG") = "OK"$

AASHTO Crack Control: End Span - Top Slab (Critical Ns)

***** Culvert - AASHTO 5.7.3.4 & 12.14.5.7**

$N_s := 24600 lbf$ Axial thrust at Service limit state

$M_s := 62860 \cdot ft \cdot lbf$ Service Load Moment - (Value Concurrent with Ns)

$e := \frac{M_s}{N_s} + \left(d - \frac{t_{max}}{2}\right)$ $e = 38.73 \cdot in$

$j := 0.74 + 0.1\left(\frac{e}{d}\right)$ $j = 0.94$ $j_{max} := .9$ $j1 := min(j, j_{max})$ $j1 = 0.9$

$$i := \frac{1}{1 - \frac{j \cdot d}{e}}$$

$$f_s := \frac{M_s + N_s \cdot \left(d - \frac{t_{max}}{2}\right)}{A_s \cdot j1 \cdot i \cdot d}$$

$f_s = 18.59 \cdot ksi$

Reinforcement stress under service load condition

$$d_c := c + \frac{d_b}{2}$$

$d_c = 2.94 \cdot in$

$\gamma_e := 0.75$

Class 2 Exposure factor

$$\beta_s := 1 + \frac{d_c}{0.7(t_{max} - d_c)}$$

$\beta_s = 1.22$

$SpacingUsed = 4.5$

$$Spacing := \frac{700 \cdot \gamma_e}{\beta_s \cdot \frac{f_s}{ksi}} - 2\frac{d_c}{in}$$

$Spacing = 17.27$

$if(Spacing > SpacingUsed, "OK", "NG") = "OK"$

TOP SLAB, BOTTOM REINFORCEMENT; Mid span

Shear Capacity

$t_{min} = 17 \cdot in$ $\quad c := 1.5in$ rebar clear distance $\quad d_b := 1.125in$ bar diameter

$f_c := 5 \quad ksi$

$d := t_{min} - c - \frac{d_b}{2}$ $\quad d = 14.94 \cdot in$ $\quad \beta := 2$

$d_{v1} := 0.9 \cdot d$ $\quad d_{v1} = 13.44 \cdot in$

$d_{v2} := 0.72 \cdot t_{min}$ $\quad d_{v2} = 12.24 \cdot in$ $\quad d_v := max(d_{v1}, d_{v2})$

$\phi V_c := .9 \cdot .0316 \cdot \beta \cdot \sqrt{f_c} \cdot ksi \cdot b_v \cdot d_v$

$\phi V_c = 2.05 \times 10^4 \cdot lbf$

$V_{uS} = 15.14 kip$ $\quad if(\phi V_c > V_{uS}, "OK", "NG") = "OK"$

Minimum Reinforcement:

Check Minimum Reinforcement, Ratio of Reinforcement Area to GROSS Concrete Area:

***** 3-Sided Culvert - AASHTO 12.14.5.8**
Ast/Agross = 0.002:
Primary reinforcement in the direction of the span, at all cross sections subject to flexural tension, at the inside face of walls, and in each direction at the top of the slabs if cover <2ft.;

$A_{sMin} := 12in \cdot t_{min} \cdot 0.002$ $\quad A_{sMin} = 0.408 \cdot in^2$

Positive (Inside Face) Moment:

$c = 1.5 \cdot in$ rebar clear distance $d := t_{min} - c - \frac{d_b}{2}$ $d = 14.94 \cdot in$

$A_s := 3.05 in^2$ $SpacingUsed := 5$ **#10 @ 5"** $f_c := 5000\ psi$

$f_y := 60000$ $a := \frac{A_s \cdot f_y}{.85 \cdot f_c \cdot 12in}$ $a = 3.588 \cdot in$ $f_y := 60000 psi$

$\phi M_n := .95 \cdot A_s \cdot f_y \cdot \left(d - \frac{a}{2}\right)$ $\boxed{\phi M_n = 1.904 \times 10^5 \cdot ft \cdot lbf}$ Positive Moment Capacity

$M_{uSP} = 1.72 \times 10^5 \cdot ft \cdot lbf$ $if(\phi M_n > M_{uSP}, "OK", "NG") = "OK"$

AASHTO Crack Control: Mid Span - Top Slab (Critical Ms)

***** Culvert - AASHTO 5.7.3.4 & 12.14.5.7**

$M_s := 113280 \cdot ft \cdot lbf$ Service Load Moment

$N_s := 9660 lbf$ Axial thrust at Service limit state - (Value Concurrent with Ms)

$e := \frac{M_s}{N_s} + \left(d - \frac{t_{min}}{2}\right)$ $e = 147.16 \cdot in$

$j := 0.74 + 0.1\left(\frac{e}{d}\right)$ $j = 1.73$ $j_{max} := .9$ $j1 := min(j, j_{max})$ $j1 = 0.9$

$i := \frac{1}{1 - \frac{j \cdot d}{e}}$

$f_s := \frac{M_s + N_s \cdot \left(d - \frac{t_{min}}{2}\right)}{A_s \cdot j1 \cdot i \cdot d}$ $\boxed{f_s = 28.6 \cdot ksi}$ Reinforcement stress under service load condition

$d_c := c + \frac{d_b}{2}$ $d_c = 2.06 \cdot in$

$\gamma_e := 0.75$ Class 2 Exposure factor

$\beta_s := 1 + \frac{d_c}{0.7(t_{min} - d_c)}$ $\beta_s = 1.2$ $SpacingUsed = 5$

$Spacing := \frac{700 \cdot \gamma_e}{\beta_s \cdot \frac{f_s}{ksi}} - 2\frac{d_c}{in}$ $Spacing = 11.21$ $if(Spacing > SpacingUsed, "OK", "NG") = "OK"$

AASHTO Crack Control: Mid Span - Top Slab (Critical Ns)

***** Culvert - AASHTO 5.7.3.4 & 12.14.5.7**

$N_s := 23080lbf$ Axial thrust at Service limit state

$M_s := 39060 \cdot ft \cdot lbf$ Service Load Moment- (Value Concurrent with Ns)

$e := \frac{M_s}{N_s} + \left(d - \frac{t_{min}}{2}\right)$ $e = 26.75 \cdot in$

$j := 0.74 + 0.1\left(\frac{e}{d}\right)$ $j = 0.92$ $j_{max} := .9$ $j1 := min(j, j_{max})$ $j1 = 0.9$

$i := \frac{1}{1 - \frac{j \cdot d}{e}}$

$f_s := \frac{M_s + N_s \cdot \left(d - \frac{t_{min}}{2}\right)}{A_s \cdot j1 \cdot i \cdot d}$ $f_s = 7.33 \cdot ksi$ Reinforcement stress under service load condition

$d_c := c + \frac{d_b}{2}$ $d_c = 2.06 \cdot in$

$\gamma_e := 0.75$ Class 2 Exposure factor

$\beta_s := 1 + \frac{d_c}{0.7(t_{min} - d_c)}$ $\beta_s = 1.2$

$Spacing := \frac{700 \cdot \gamma_e}{\beta_s \cdot \frac{f_s}{ksi}} - 2\frac{d_c}{in}$ $Spacing = 55.72$ $if(Spacing > SpacingUsed, "OK", "NG") = "OK"$

Top Slab: Bottom Distribution Reinforcement: Mid Span

***** - AASHTO 9.7.3.2;**

$C := 2.0ft$ Distribution Steel is required;

$Ws := Span$ $Ws = 42.42 \cdot ft$ $A_s = 3.05 \cdot in^2$

Bottom Steel Req'd:

$P_{sd} := \frac{100}{Ws^{.5}} \cdot ft^{.5}$ $P_{sd} = 15$ $P_{max} := 50$ If the main reinforcement parallel to the traffic;

$P := min(P_{sd}, P_{max})$

$A_{sd} := \frac{P}{100} \cdot A_s$ $A_{sd} = 0.468 \cdot in^2$ **#5 @ 10"**

TOP SLAB, BOTTOM REINFORCEMENT; End Span :

Shear Capacity

$c := 1.5in$ rebar clear distance $d_b := 0.875in$ bar diameter

$f_c := 5\ ksi$

$d := t_{max} - c - \frac{d_b}{2}$ $d = 14.94 \cdot in$ $\beta := 2$

$d_{v1} := 0.9 \cdot d$ $d_{v1} = 18.06 \cdot in$

$d_{v2} := 0.72 \cdot t_{max}$ $d_{v2} = 15.84 \cdot in$ $d_v := max(d_{v1}, d_{v2})$

$\phi V_c := .9 \cdot .0316 \cdot \beta \cdot \sqrt{f_c} \cdot ksi \cdot b_v \cdot d_v$

$\phi V_c = 2.756 \times 10^4 \cdot lbf$

$V_{uSe} = 21.16 kip$ $if(\phi V_c > V_{uSe}, "OK", "NG") = "OK"$

Minimum Reinforcement:

Check Minimum Reinforcement, Ratio of Reinforcement Area to GROSS Concrete Area:

***** 3-Sided Culvert - AASHTO 12.14.5.8**
Ast/Agross = 0.002:
Primary reinforcement in the direction of the span, at all cross sections subject to flexural tension, at the inside face of walls, and in each direction at the top of the slabs if cover <2ft :

$A_{sMin} := 12in \cdot \left(\frac{t_{max} + t_{min}}{2}\right) \cdot 0.002$ $A_{sMin} = 0.468 \cdot in^2$

Positive (Inside Face) Moment:

$d := \frac{t_{max} + t_{min}}{2} - c - \frac{d_b}{2} = 17.56 \cdot in$

$A_s := 1.44 in^2$ $SpacingUsed := 5$ $f_c := 5000\ psi$ **#7 @ 5"**

$f_y := 60000$ $a := \frac{A_s \cdot f_y}{.85 \cdot f_c \cdot 12in}$ $a = 1.694 \cdot in$ $f_y := 60000 psi$

$\phi M_n := .95 \cdot A_s \cdot f_y \cdot \left(d - \frac{a}{2}\right)$ $\phi M_n = 1.143 \times 10^5 \cdot ft \cdot lbf$ Positive Moment Capacity

$M_{uSPe} = 2.97 \times 10^4 \cdot ft \cdot lbf$ $if(\phi M_n > M_{uSPe}, "OK", "NG") = "OK"$

AASHTO Crack Control: End Span - Top Slab (Critical Ms)

***** Culvert - AASHTO 5.7.3.4 & 12.14.5.7**

$M_s := 50410 \cdot ft \cdot lbf$ Service Load Moment

$N_s := 12440 lbf$ Axial thrust at Service limit state - (Value Concurrent with Ms)

$e := \frac{M_s}{N_s} + \left(d - \frac{t_{max} + t_{min}}{4}\right)$ $e = 56.44 \cdot in$

$j := 0.74 + 0.1\left(\frac{e}{d}\right)$ $j = 1.06$ $j_{max} := .9$ $j1 := min(j, j_{max})$ $j1 = 0.9$

$i := \frac{1}{1 - \frac{j \cdot d}{e}}$

$f_s := \frac{M_s + N_s \cdot \left(d - \frac{t_{max} + t_{min}}{4}\right)}{A_s \cdot j1 \cdot i \cdot d}$ $f_s = 20.66 \cdot ksi$ Reinforcement stress under service load condition

$d_c := c + \frac{d_b}{2}$ $d_c = 1.94 \cdot in$

$\gamma_e := 0.75$ Class 2 Exposure factor

$\beta_s := 1 + \frac{d_c}{0.7\left(\frac{t_{max} + t_{min}}{2} - d_c\right)}$ $\beta_s = 1.16$

$SpacingUsed = 5$

$Spacing := \frac{700 \cdot \gamma_e}{\beta_s \cdot \frac{f_s}{ksi}} - 2\frac{d_c}{in}$ $Spacing = 18.08$ $if(Spacing > SpacingUsed, "OK", "NG") = "OK"$

AASHTO Crack Control: End Span - Top Slab (Critical Ns)

***** Culvert - AASHTO 5.7.3.4 & 12.14.5.7**

$N_s := 16460 lbf$ Service Load Moment

$M_s := 39480 \cdot ft \cdot lbf$ Axial thrust at Service limit state - (Value Concurrent with Ns)

$e := \frac{M_s}{N_s} + \left(d - \frac{t_{max} + t_{min}}{4}\right)$ $e = 36.6 \cdot in$

$j := 0.74 + 0.1\left(\frac{e}{d}\right)$ $j = 0.95$ $j_{max} := .9$ $j1 := min(j, j_{max})$ $j1 = 0.9$

$$i := \frac{1}{1 - \frac{j \cdot d}{e}}$$

$$f_s := \frac{M_s + N_s \cdot \left(d - \frac{t_{max} + t_{min}}{4}\right)}{A_s \cdot j1 \cdot i \cdot d}$$ $f_s = 14.42 \cdot ksi$ Reinforcement stress under service load condition

$$d_c := c + \frac{d_b}{2}$$ $d_c = 1.94 \cdot in$

$\gamma_e := 0.75$ Class 2 Exposure factor

$$\beta_s := 1 + \frac{d_c}{0.7\left(\frac{t_{max} + t_{min}}{2} - d_c\right)}$$ $\beta_s = 1.16$

$$Spacing := \frac{700 \cdot \gamma_e}{\beta_s \cdot \frac{f_s}{ksi}} - 2\frac{d_c}{in}$$ $Spacing = 27.58$ $if(Spacing > SpacingUsed, "OK", "NG") = "OK"$

Walls: Members 1 & 2
Shear Capacity

$t_{wMax} = 25 \cdot in$ $c := 2in$ rebar clear distance $d_b := 0.875in$ bar diameter

$f_c := 5 \ ksi$

$$d := t_{wMax} - c - \frac{d_b}{2}$$ $d = 22.56 \cdot in$ $\beta := 2$

$d_{v1} := 0.9 \cdot d$ $d_{v1} = 20.31 \cdot in$

$d_{v2} := 0.72 \cdot t_{wMax}$ $d_{v2} = 18 \cdot in$ $d_v := max(d_{v1}, d_{v2})$

$$\phi V_c := 0.9 \cdot .0316 \cdot \beta \cdot \sqrt{f_c} \cdot ksi \cdot b_v \cdot d_v$$ $\phi V_c = 3.1 \times 10^4 \cdot lbf$ $V_{uW} = 30.02 kip$

$if(\phi V_c > V_{uW}, "OK", "NG \text{ see futher analysis below}") = "OK"$

Minimum Reinforcement:

Check Minimum Reinforcement, Ratio of Reinforcement Area to GROSS Concrete Area:

***** 3-Sided Culvert - AASHTO 12.14.5.8**
Ast/Agross = 0.002:
Primary reinforcement in the direction of the span, at all cross sections subject to flexural tension, at the inside face of walls, and in each direction at the top of the slabs if cover <2ft.;

$A_{sMin} := 12in \cdot (t_{wMax} 0.002)$ $A_{sMin} = 0.6 \cdot in^2$

Negative (Outside Face) Moment
(Use the Same Reinforcement as in Top Slab:

rebar clear distance $d := t_{wMax} - c - \frac{d_b}{2}$ $d = 22.56 \cdot in$

$A_s := 1.60in^2$ **#7 @ 4.5"** $f_c := 5000\ psi$ $SpacingUsed := 4.5$

$f_y := 60000$ $a := \frac{A_s \cdot f_y}{.85 \cdot f_c \cdot 12in}$ $a = 1.882 \cdot in$ $f_y := 60000psi$

$\phi M_n := .95 \cdot A_s \cdot f_y \cdot \left(d - \frac{a}{2}\right)$ $\boxed{\phi M_n = 1.643 \times 10^5 \cdot ft \cdot lbf}$ Negative Moment Capacity

$M_{uW} = 1.35 \times 10^5 \cdot ft \cdot lbf$ $if(\phi M_n > M_{uW}, "OK", "NG") = "OK"$

AASHTO Crack Control: Wall (Critical Ms)

***** Culvert - AASHTO 5.7.3.4 & 12.14.5.7**

$M_s := 89360 \cdot ft \cdot lbf$ Service Load Moment

$N_s := 16610lbf$ Axial thrust at Service limit state - (Value Concurrent with Ms)

$e := \frac{M_s}{N_s} + \left(d - \frac{t_{wMax}}{2}\right)$ $e = 74.62 \cdot in$

$j := 0.74 + 0.1\left(\frac{e}{d}\right)$ $j = 1.07$ $j_{max} := .9$ $j1 := min(j, j_{max})$ $j1 = 0.9$

$i := \frac{1}{1 - \frac{j \cdot d}{e}}$

$f_s := \frac{M_s + N_s \cdot \left(d - \frac{t_{wMax}}{2}\right)}{A_s \cdot j1 \cdot i \cdot d}$ $\boxed{f_s = 25.8 \cdot ksi}$ Reinforcement stress under service load condition

$d_c := c + \frac{d_b}{2}$ $d_c = 2.44 \cdot in$

$\gamma_e := 0.75$ Class 2 Exposure factor

$\beta_s := 1 + \frac{d_c}{0.7(t_{wMax} - d_c)}$ $\beta_s = 1.15$ $SpacingUsed = 4.5$

$$Spacing := \frac{700 \cdot \gamma_e}{\beta_s \cdot \frac{f_s}{ksi}} - 2\frac{d_c}{in}$$ $Spacing = 12.75$

$if(Spacing > SpacingUsed, "OK", "NG") = "OK"$

AASHTO Crack Control: Wall (Critical Ns)

***** Culvert - AASHTO 5.7.3.4 & 12.14.5.7**

$N_s := 18700 lbf$ Axial thrust at Service limit state

$M_s := 77370 \cdot ft \cdot lbf$ Service Load Moment -(Value Concurrent with Ns)

$$e := \frac{M_s}{N_s} + \left(d - \frac{t_{wMax}}{2}\right)$$ $e = 59.71 \cdot in$

$$j := 0.74 + 0.1\left(\frac{e}{d}\right)$$ $j = 1$ $j_{max} := .9$ $j1 := min(j, j_{max})$ $j1 = 0.9$

$$i := \frac{1}{1 - \frac{j \cdot d}{e}}$$

$$f_s := \frac{M_s + N_s \cdot \left(d - \frac{t_{wMax}}{2}\right)}{A_s \cdot j1 \cdot i \cdot d}$$ $f_s = 21.32 \cdot ksi$ Reinforcement stress under service load condition

$$d_c := c + \frac{d_b}{2}$$ $d_c = 2.44 \cdot in$

$\gamma_e := 0.75$ Class 2 Exposure factor

$$\beta_s := 1 + \frac{d_c}{0.7(t_{wMax} - d_c)}$$ $\beta_s = 1.15$

$$Spacing := \frac{700 \cdot \gamma_e}{\beta_s \cdot \frac{f_s}{ksi}} - 2\frac{d_c}{in}$$ $Spacing = 16.46$

$if(Spacing > SpacingUsed, "OK", "NG") = "OK"$

Shear Capacity : Recalculated

NOT APPLICABLE

using (2nd shear method) equation 5.14.5.3-1

$t_{wMax} = 25 \cdot in$ $c := 1.5 in$ rebar clear distance $d_b = 0.88 \cdot in$ bar diameter

$f_c := 5 \ ksi$

$$d := t_{wMax} - c - \frac{d_b}{2}$$ $d = 23.06 \cdot in$

$\rho := \frac{V_{uW} \cdot d}{M_{uW}}$ $\rho = 0.43$ $\rho_{max} := 1.0$ $\rho 1 := min(\rho, \rho_{max})$ $\rho 1 = 0.43$

$\phi V_{c1} := 0.9 \cdot \left[0.0676 \cdot \sqrt{f_c} + \left(4.6 \cdot \frac{A_s}{b_v \cdot d} \cdot \rho 1 \right) \right] \cdot b_v \cdot d \cdot ksi$ $\phi V_{c1} = 4.048 \times 10^4 \cdot lbf$

$\phi V_{c2} := .9 \cdot 0.126 \cdot \sqrt{f_c} \cdot ksi \cdot b_v \cdot d$ $\phi V_{c2} = 7.018 \times 10^4 \cdot lbf$

$if(V_{uW} < \phi V_{c1} < \phi V_{c2}, \text{"OK"}, \text{"NG"}) = \text{"OK"}$

Inside Wall Face Vertical Reinforcement;

$A_{sMin} := 12in \cdot \frac{t_{wMax} + t_{wMin}}{2} \cdot 0.002$ $A_{sMin} = 0.516 \cdot in^2$ Use #5 @ 7in ;

Inside Wall Face Horizontal Reinforcement;

$A_{st} := 12in \cdot \frac{t_{wMax} + t_{wMin}}{4} \cdot 0.002$ $A_{st} = 0.258 \cdot in^2$ Use #4 @ 9in ;

Calculate a Cut Off Point:-

Per Moment Envelope Diagram, top Reinforcement is not req'd at a distance of 13.0ft from Culvert Inner corner.

$L_{CutOff} := 13.0ft$ $d_b = 0.88 \cdot in$ $Span = 42.42 \cdot ft$

Use Max. from a1, a2 & a3 (Refer to Section 1.2.3):

$a1 := d$ $a1 = 23.06 \cdot in$ $a2 := 15 \cdot d_b$ $a2 = 13.13 \cdot in$ $a3 := \frac{Span}{20}$ $a3 = 25.45 \cdot in$

$a := max(a1, a2, a3)$

$L_{Bar} := L_{CutOff} + a$ $L_{Bar} = 15.12 \cdot ft$ **Cut #7 Bars (top Reinforcement) @ a distance of LBar from the culvert Inner Corner.**

CHECK DEFLECTION:

Max. Vertical Displacement at Joint 4 from the Load Case #600 (1.0LL):

$Displ_1 := 0.19in$ **- Fixed Support in Global X-Dir. at Joint 5 - HL 93**

$Displ_2 := 0.61in$ **- Spring Support in Global X-Dir. at Joint 5 - HL 93**

$Displ := max(Displ_1, Displ_2)$ $Displ = 0.61 \cdot in$

Allowable Displacement: 1/800 of Span Length

$AllowDispl := \frac{Span}{800}$ $AllowDispl = 0.64 \cdot in$ $if(AllowDispl > Displ, \text{"OK"}, \text{"NG"}) = \text{"OK"}$

Section 3
STAAD PRO Output: 42.42' x 4.583'
Rigid Bridge, 0'-2' Earth Cover, Fixed
HL93 incl. SF & BM Diagrams

```
****************************************************
*                                                  *
*           STAAD.Pro V8i SELECTseries5            *
*           Version  20.07.10.65                   *
*           Proprietary Program of                 *
*           Bentley Systems, Inc.                  *
*           Date=    MAR  1, 2016                  *
*           Time=    10:40: 5                      *
*                                                  *
*      USER ID:                                    *
****************************************************
```

```
     1. STAAD SPACE
INPUT FILE: 42.42ft x 5ft-HL93-Fixed.STD
     2. START JOB INFORMATION
     3. ENGINEER DATE 12/22/15
     4. ENGINEER NAME BK
     5. END JOB INFORMATION
     6. INPUT WIDTH 79
     7. UNIT FEET KIP
     8. JOINT COORDINATES
     9. 1 -21.96 0 0; 2 21.96 0 0; 3 -21.96 5.583 0; 4 -12 5.583 0; 5 0 5.583 0
    10. 6 12 5.583 0; 7 21.96 5.583 0
    11. MEMBER INCIDENCES
    12. 1 1 3; 2 2 7; 3 3 4; 4 4 5; 5 6 5; 6 7 6
    13. DEFINE MATERIAL START
    14. ISOTROPIC CONCRETE5000
    15. E 580390
    16. POISSON 0.17
    17. DENSITY 0.15
    18. ALPHA 5.5E-006
    19. DAMP 0.05
    20. ISOTROPIC STEEL
    21. E 4.176E+006
    22. POISSON 0.3
    23. DENSITY 0.489024
    24. ALPHA 6.5E-006
    25. DAMP 0.03
    26. END DEFINE MATERIAL
    27. MEMBER PROPERTY AMERICAN
    28. 4 5 PRIS YD 1.416 ZD 1
    29. MEMBER PROPERTY AMERICAN
    30. 1 2 TAPERED 2.083 1 1.5 1 0.2 1 0.2
    31. 3 6 TAPERED 1.83 1 1.416 1 0.2 1 0.2
    32. CONSTANTS
    33. MATERIAL CONCRETE5000 ALL
    34. SUPPORTS
    35. 1 FIXED BUT MZ
    36. 2 FIXED BUT MZ
    37. MEMBER OFFSET
    38. 3 START 1 -1.12 0
```

```
39. 6 START -1 -1.12 0
40. 1 END 0.75 -1.04 0
41. 2 END -0.75 -1.04 0
42. DEFINE MOVING LOAD
43. ***TRUCK
44. TYPE 1 LOAD 3.9 3.9 0.975
45. DIST 14 14
46. ***TANDEM
47. TYPE 2 LOAD 3.05 3.05
48. DIST 4
49. ***
50. LOAD 1 LOADTYPE NONE  TITLE LOAD CASE 1- UNIFORM LOAD -COVER 1.0FT
51. MEMBER LOAD
52. 3 TO 6 UNI GY -0.141
53. SELFWEIGHT Y -1
54. LOAD 2 LOADTYPE NONE  TITLE -EMAX
55. MEMBER LOAD
56. 2 TRAP GX -0.49 -0.198
57. 1 TRAP GX 0.49 0.198
58. LOAD 4 LOADTYPE NONE  TITLE -AWL
59. MEMBER LOAD
60. 2 UNI GX -0.28
61. 1 UNI GX 0.28
62. LOAD 5 LOADTYPE NONE  TITLE -IPF-WATER INSIDE
63. MEMBER LOAD
64. 2 TRAP GX 0.286 0 0
65. 1 TRAP GX -0.286 0 0
66. LOAD 3 LOADTYPE NONE  TITLE LOAD CASE LL - LANE LOAD
67. MEMBER LOAD
68. 3 TO 6 UNI GY -0.064
69. LOAD 6 LOADTYPE LIVE  TITLE LOAD CASE LL - TRUCK
70. LOAD GENERATION 16
71. TYPE 1 -49.96 5.583 0 XINC 3
72. LOAD 26 LOADTYPE LIVE  TITLE LOAD CASE LL - TANDEM
**WARNING-A MOVING LOAD THAT WOULD HAVE BEEN APPLIED BEYOND THE X AND Z RANGES
          OF THE STRUCTURE HAS BEEN IGNORED. CASE=    7 WHEEL   1 OF   3
**WARNING-A MOVING LOAD THAT WOULD HAVE BEEN APPLIED BEYOND THE X AND Z RANGES
          OF THE STRUCTURE HAS BEEN IGNORED. CASE=    7 WHEEL   2 OF   3
**WARNING-A MOVING LOAD THAT WOULD HAVE BEEN APPLIED BEYOND THE X AND Z RANGES
          OF THE STRUCTURE HAS BEEN IGNORED. CASE=    8 WHEEL   1 OF   3
**WARNING-A MOVING LOAD THAT WOULD HAVE BEEN APPLIED BEYOND THE X AND Z RANGES
          OF THE STRUCTURE HAS BEEN IGNORED. CASE=    8 WHEEL   2 OF   3
**WARNING-A MOVING LOAD THAT WOULD HAVE BEEN APPLIED BEYOND THE X AND Z RANGES
          OF THE STRUCTURE HAS BEEN IGNORED. CASE=    9 WHEEL   1 OF   3
**WARNING-A MOVING LOAD THAT WOULD HAVE BEEN APPLIED BEYOND THE X AND Z RANGES
          OF THE STRUCTURE HAS BEEN IGNORED. CASE=    9 WHEEL   2 OF   3
**WARNING-A MOVING LOAD THAT WOULD HAVE BEEN APPLIED BEYOND THE X AND Z RANGES
          OF THE STRUCTURE HAS BEEN IGNORED. CASE=   10 WHEEL   1 OF   3
**WARNING-A MOVING LOAD THAT WOULD HAVE BEEN APPLIED BEYOND THE X AND Z RANGES
          OF THE STRUCTURE HAS BEEN IGNORED. CASE=   10 WHEEL   2 OF   3
**WARNING-A MOVING LOAD THAT WOULD HAVE BEEN APPLIED BEYOND THE X AND Z RANGES
          OF THE STRUCTURE HAS BEEN IGNORED. CASE=   11 WHEEL   1 OF   3
**WARNING-A MOVING LOAD THAT WOULD HAVE BEEN APPLIED BEYOND THE X AND Z RANGES
          OF THE STRUCTURE HAS BEEN IGNORED. CASE=   11 WHEEL   2 OF   3
*ADDITIONAL MOVING LOAD MESSAGES SUPPRESSED
*ADDITIONAL MOVING LOAD MESSAGES SUPPRESSED
```

```
73. LOAD GENERATION 10
74. TYPE 2 -25.96 5.583 0 XINC 3
75. ***TRUCK
76. LOAD COMB 100 COMBINATION LOAD CASE -MAX MOMENT OUTSIDE
77. 7 1.75 3 1.75 1 1.3 2 1.35 4 1.75
78. LOAD COMB 101 COMBINATION LOAD CASE
79. 8 1.75 3 1.75 1 1.3 2 1.35 4 1.75
80. LOAD COMB 102 COMBINATION LOAD CASE
81. 9 1.75 3 1.75 1 1.3 2 1.35 4 1.75
82. LOAD COMB 103 COMBINATION LOAD CASE
83. 10 1.75 3 1.75 1 1.3 2 1.35 4 1.75
84. LOAD COMB 104 COMBINATION LOAD CASE
85. 11 1.75 3 1.75 1 1.3 2 1.35 4 1.75
86. LOAD COMB 105 COMBINATION LOAD CASE
87. 12 1.75 3 1.75 1 1.3 2 1.35 4 1.75
88. LOAD COMB 106 COMBINATION LOAD CASE
89. 13 1.75 3 1.75 1 1.25 2 1.35 4 1.75
90. LOAD COMB 107 COMBINATION LOAD CASE
91. 14 1.75 3 1.75 1 1.3 2 1.35 4 1.75
92. LOAD COMB 108 COMBINATION LOAD CASE
93. 15 1.75 3 1.75 1 1.3 2 1.35 4 1.75
94. LOAD COMB 109 COMBINATION LOAD CASE
95. 16 1.75 3 1.75 1 1.3 2 1.35 4 1.75
96. LOAD COMB 110 COMBINATION LOAD CASE
97. 17 1.75 3 1.75 1 1.3 2 1.35 4 1.75
98. LOAD COMB 111 COMBINATION LOAD CASE
99. 18 1.75 3 1.75 1 1.3 2 1.35 4 1.75
100. LOAD COMB 112 COMBINATION LOAD CASE
101. 19 1.75 3 1.75 1 1.3 2 1.35 4 1.75
102. LOAD COMB 113 COMBINATION LOAD CASE
103. 20 1.75 3 1.75 1 1.3 2 1.35 4 1.75
104. LOAD COMB 114 COMBINATION LOAD CASE
105. 21 1.75 3 1.75 1 1.3 2 1.35 4 1.75
106. LOAD COMB 115 COMBINATION LOAD CASE
107. 22 1.75 3 1.75 1 1.3 2 1.35 4 1.75
108. LOAD COMB 200 COMBINATION LOAD CASE -MAX MOMENT INSIDE
109. 7 1.75 3 1.75 1 1.3 2 0.5 5 1.0
110. LOAD COMB 201 COMBINATION LOAD CASE
111. 8 1.75 3 1.75 1 1.3 2 0.5 5 1.0
112. LOAD COMB 202 COMBINATION LOAD CASE
113. 9 1.75 3 1.75 1 1.3 2 0.5 5 1.0
114. LOAD COMB 203 COMBINATION LOAD CASE
115. 10 1.75 3 1.75 1 1.3 2 0.5 5 1.0
116. LOAD COMB 204 COMBINATION LOAD CASE
117. 11 1.75 3 1.75 1 1.3 2 0.5 5 1.0
118. LOAD COMB 205 COMBINATION LOAD CASE
119. 12 1.75 3 1.75 1 1.3 2 0.5 5 1.0
120. LOAD COMB 206 COMBINATION LOAD CASE
121. 13 1.75 3 1.75 1 1.3 2 0.5 5 1.0
122. LOAD COMB 207 COMBINATION LOAD CASE
123. 14 1.75 3 1.75 1 1.3 2 0.5 5 1.0
124. LOAD COMB 208 COMBINATION LOAD CASE
125. 15 1.75 3 1.75 1 1.3 2 0.5 5 1.0
126. LOAD COMB 209 COMBINATION LOAD CASE
127. 16 1.75 3 1.75 1 1.3 2 0.5 5 1.0
128. LOAD COMB 210 COMBINATION LOAD CASE
```

```
129. 17 1.75 3 1.75 1 1.3 2 0.5 5 1.0
130. LOAD COMB 211 COMBINATION LOAD CASE
131. 18 1.75 3 1.75 1 1.3 2 0.5 5 1.0
132. LOAD COMB 212 COMBINATION LOAD CASE
133. 19 1.75 3 1.75 1 1.3 2 0.5 5 1.0
134. LOAD COMB 213 COMBINATION LOAD CASE
135. 20 1.75 3 1.75 1 1.3 2 0.5 5 1.0
136. LOAD COMB 214 COMBINATION LOAD CASE
137. 21 1.75 3 1.75 1 1.3 2 0.5 5 1.0
138. LOAD COMB 215 COMBINATION LOAD CASE
139. 22 1.75 3 1.75 1 1.3 2 0.5 5 1.0
140. LOAD COMB 300 COMBINATION LOAD CASE -CRACK CONTROL-MAX OUTSIDE
141. 7 1.0 3 1.0 1 1.0 2 1.0 4 1.0
142. LOAD COMB 301 COMBINATION LOAD CASE
143. 8 1.0 3 1.0 1 1.0 2 1.0 4 1.0
144. LOAD COMB 302 COMBINATION LOAD CASE
145. 9 1.0 3 1.0 1 1.0 2 1.0 4 1.0
146. LOAD COMB 303 COMBINATION LOAD CASE
147. 10 1.0 3 1.0 1 1.0 2 1.0 4 1.0
148. LOAD COMB 304 COMBINATION LOAD CASE
149. 11 1.0 3 1.0 1 1.0 2 1.0 4 1.0
150. LOAD COMB 305 COMBINATION LOAD CASE
151. 12 1.0 3 1.0 1 1.0 2 1.0 4 1.0
152. LOAD COMB 306 COMBINATION LOAD CASE
153. 13 1.0 3 1.0 1 1.0 2 1.0 4 1.0
154. LOAD COMB 307 COMBINATION LOAD CASE
155. 14 1.0 3 1.0 1 1.0 2 1.0 4 1.0
156. LOAD COMB 308 COMBINATION LOAD CASE
157. 15 1.0 3 1.0 1 1.0 2 1.0 4 1.0
158. LOAD COMB 309 COMBINATION LOAD CASE
159. 16 1.0 3 1.0 1 1.0 2 1.0 4 1.0
160. LOAD COMB 310 COMBINATION LOAD CASE
161. 17 1.0 3 1.0 1 1.0 2 1.0 4 1.0
162. LOAD COMB 311 COMBINATION LOAD CASE
163. 18 1.0 3 1.0 1 1.0 2 1.0 4 1.0
164. LOAD COMB 312 COMBINATION LOAD CASE
165. 19 1.0 3 1.0 1 1.0 2 1.0 4 1.0
166. LOAD COMB 313 COMBINATION LOAD CASE
167. 20 1.0 3 1.0 1 1.0 2 1.0 4 1.0
168. LOAD COMB 314 COMBINATION LOAD CASE
169. 21 1.0 3 1.0 1 1.0 2 1.0 4 1.0
170. LOAD COMB 315 COMBINATION LOAD CASE
171. 22 1.0 3 1.0 1 1.0 2 1.0 4 1.0
172. LOAD COMB 400 COMBINATION LOAD CASE -CRACK CONTROL-MAX INSIDE
173. 7 1.0 3 1.0 1 1.0 2 0.5 5 1.0
174. LOAD COMB 401 COMBINATION LOAD CASE
175. 8 1.0 3 1.0 1 1.0 2 0.5 5 1.0
176. LOAD COMB 402 COMBINATION LOAD CASE
177. 9 1.0 3 1.0 1 1.0 2 0.5 5 1.0
178. LOAD COMB 403 COMBINATION LOAD CASE
179. 10 1.0 3 1.0 1 1.0 2 0.5 5 1.0
180. LOAD COMB 404 COMBINATION LOAD CASE
181. 11 1.0 3 1.0 1 1.0 2 0.5 5 1.0
182. LOAD COMB 405 COMBINATION LOAD CASE
183. 12 1.0 3 1.0 1 1.0 2 0.5 5 1.0
184. LOAD COMB 406 COMBINATION LOAD CASE
```

```
185. 13 1.0 3 1.0 1 1.0 2 0.5 5 1.0
186. LOAD COMB 407 COMBINATION LOAD CASE
187. 14 1.0 3 1.0 1 1.0 2 0.5 5 1.0
188. LOAD COMB 408 COMBINATION LOAD CASE
189. 15 1.0 3 1.0 1 1.0 2 0.5 5 1.0
190. LOAD COMB 409 COMBINATION LOAD CASE
191. 16 1.0 3 1.0 1 1.0 2 0.5 5 1.0
192. LOAD COMB 410 COMBINATION LOAD CASE
193. 17 1.0 3 1.0 1 1.0 2 0.5 5 1.0
194. LOAD COMB 411 COMBINATION LOAD CASE
195. 18 1.0 3 1.0 1 1.0 2 0.5 5 1.0
196. LOAD COMB 412 COMBINATION LOAD CASE
197. 19 1.0 3 1.0 1 1.0 2 0.5 5 1.0
198. LOAD COMB 413 COMBINATION LOAD CASE
199. 20 1.0 3 1.0 1 1.0 2 0.5 5 1.0
200. LOAD COMB 414 COMBINATION LOAD CASE
201. 21 1.0 3 1.0 1 1.0 2 0.5 5 1.0
202. LOAD COMB 415 COMBINATION LOAD CASE
203. 22 1.0 3 1.0 1 1.0 2 0.5 5 1.0
204. LOAD COMB 500 COMBINATION LOAD CASE -CHECK SUPPORT DISPL.
205. 7 1.0 3 1.0 1 1.0
206. LOAD COMB 501 COMBINATION LOAD CASE
207. 8 1.0 3 1.0 1 1.0
208. LOAD COMB 502 COMBINATION LOAD CASE
209. 9 1.0 3 1.0 1 1.0
210. LOAD COMB 503 COMBINATION LOAD CASE
211. 10 1.0 3 1.0 1 1.0
212. LOAD COMB 504 COMBINATION LOAD CASE
213. 11 1.0 3 1.0 1 1.0
214. LOAD COMB 505 COMBINATION LOAD CASE
215. 12 1.0 3 1.0 1 1.0
216. LOAD COMB 506 COMBINATION LOAD CASE
217. 13 1.0 3 1.0 1 1.0
218. LOAD COMB 507 COMBINATION LOAD CASE
219. 14 1.0 3 1.0 1 1.0
220. LOAD COMB 508 COMBINATION LOAD CASE
221. 15 1.0 3 1.0 1 1.0
222. LOAD COMB 509 COMBINATION LOAD CASE
223. 16 1.0 3 1.0 1 1.0
224. LOAD COMB 510 COMBINATION LOAD CASE
225. 17 1.0 3 1.0 1 1.0
226. LOAD COMB 511 COMBINATION LOAD CASE
227. 18 1.0 3 1.0 1 1.0
228. LOAD COMB 512 COMBINATION LOAD CASE
229. 19 1.0 3 1.0 1 1.0
230. LOAD COMB 513 COMBINATION LOAD CASE
231. 20 1.0 3 1.0 1 1.0
232. LOAD COMB 514 COMBINATION LOAD CASE
233. 21 1.0 3 1.0 1 1.0
234. LOAD COMB 515 COMBINATION LOAD CASE
235. 22 1.0 3 1.0 1 1.0
236. LOAD COMB 600 COMBINATION LOAD CASE -CHECK DEFLEC.
237. 7 1.0 3 1.0
238. LOAD COMB 601 COMBINATION LOAD CASE
239. 8 1.0 3 1.0
240. LOAD COMB 602 COMBINATION LOAD CASE
```

```
241. 9 1.0 3 1.0
242. LOAD COMB 603 COMBINATION LOAD CASE
243. 10 1.0 3 1.0
244. LOAD COMB 604 COMBINATION LOAD CASE
245. 11 1.0 3 1.0
246. LOAD COMB 605 COMBINATION LOAD CASE
247. 12 1.0 3 1.0
248. LOAD COMB 606 COMBINATION LOAD CASE
249. 13 1.0 3 1.0
250. LOAD COMB 607 COMBINATION LOAD CASE
251. 14 1.0 3 1.0
252. LOAD COMB 608 COMBINATION LOAD CASE
253. 15 1.0 3 1.0
254. LOAD COMB 609 COMBINATION LOAD CASE
255. 16 1.0 3 1.0
256. LOAD COMB 610 COMBINATION LOAD CASE
257. 17 1.0 3 1.0
258. LOAD COMB 611 COMBINATION LOAD CASE
259. 18 1.0 3 1.0
260. LOAD COMB 612 COMBINATION LOAD CASE
261. 19 1.0 3 1.0
262. LOAD COMB 613 COMBINATION LOAD CASE
263. 20 1.0 3 1.0
264. LOAD COMB 614 COMBINATION LOAD CASE
265. 21 1.0 3 1.0
266. LOAD COMB 615 COMBINATION LOAD CASE
267. 22 1.0 3 1.0
268. ***
269. LOAD COMB 700 COMBINATION LOAD CASE -DL
270. 1 1.0 2 1.0 4 1.0
271. LOAD COMB 701 COMBINATION LOAD CASE -DL
272. 1 1.0 2 0.5 5 1.0
273. ***
274. LOAD COMB 800 COMBINATION LOAD CASE -LL
275. 7 1.0 3 1.0
276. LOAD COMB 801 COMBINATION LOAD CASE
277. 8 1.0 3 1.0
278. LOAD COMB 802 COMBINATION LOAD CASE
279. 9 1.0 3 1.0
280. LOAD COMB 803 COMBINATION LOAD CASE
281. 10 1.0 3 1.0
282. LOAD COMB 804 COMBINATION LOAD CASE
283. 11 1.0 3 1.0
284. LOAD COMB 805 COMBINATION LOAD CASE
285. 12 1.0 3 1.0
286. LOAD COMB 806 COMBINATION LOAD CASE
287. 13 1.0 3 1.0
288. LOAD COMB 807 COMBINATION LOAD CASE
289. 14 1.0 3 1.0
290. LOAD COMB 808 COMBINATION LOAD CASE
291. 15 1.0 3 1.0
292. LOAD COMB 809 COMBINATION LOAD CASE
293. 16 1.0 3 1.0
294. LOAD COMB 810 COMBINATION LOAD CASE
295. 17 1.0 3 1.0
296. LOAD COMB 811 COMBINATION LOAD CASE
```

```
297. 18 1.0 3 1.0
298. LOAD COMB 812 COMBINATION LOAD CASE
299. 19 1.0 3 1.0
300. LOAD COMB 813 COMBINATION LOAD CASE
301. 20 1.0 3 1.0
302. LOAD COMB 814 COMBINATION LOAD CASE
303. 21 1.0 3 1.0
304. LOAD COMB 815 COMBINATION LOAD CASE
305. 22 1.0 3 1.0
306. LOAD COMB 1000 COMBINATION LOAD CASE -MAX MOMENT OUTSIDE
307. 27 1.75 3 1.75 1 1.3 2 1.35 4 1.75
308. LOAD COMB 1001 COMBINATION LOAD CASE
309. 28 1.75 3 1.75 1 1.3 2 1.35 4 1.75
310. LOAD COMB 1002 COMBINATION LOAD CASE
311. 29 1.75 3 1.75 1 1.3 2 1.35 4 1.75
312. LOAD COMB 1003 COMBINATION LOAD CASE
313. 30 1.75 3 1.75 1 1.3 2 1.35 4 1.75
314. LOAD COMB 1004 COMBINATION LOAD CASE
315. 31 1.75 3 1.75 1 1.3 2 1.35 4 1.75
316. LOAD COMB 1005 COMBINATION LOAD CASE
317. 32 1.75 3 1.75 1 1.3 2 1.35 4 1.75
318. LOAD COMB 1006 COMBINATION LOAD CASE
319. 33 1.75 3 1.75 1 1.3 2 1.35 4 1.75
320. LOAD COMB 1007 COMBINATION LOAD CASE
321. 34 1.75 3 1.75 1 1.3 2 1.35 4 1.75
322. LOAD COMB 1008 COMBINATION LOAD CASE
323. 35 1.75 3 1.75 1 1.3 2 1.35 4 1.75
324. LOAD COMB 1009 COMBINATION LOAD CASE
325. 36 1.75 3 1.75 1 1.3 2 1.35 4 1.75
326. LOAD COMB 2000 COMBINATION LOAD CASE -MAX MOMENT INSIDE
327. 27 1.75 3 1.75 1 1.3 2 0.5 5 1.0
328. LOAD COMB 2001 COMBINATION LOAD CASE
329. 28 1.75 3 1.75 1 1.3 2 0.5 5 1.0
330. LOAD COMB 2002 COMBINATION LOAD CASE
331. 29 1.75 3 1.75 1 1.3 2 0.5 5 1.0
332. LOAD COMB 2003 COMBINATION LOAD CASE
333. 30 1.75 3 1.75 1 1.3 2 0.5 5 1.0
334. LOAD COMB 2004 COMBINATION LOAD CASE
335. 31 1.75 3 1.75 1 1.3 2 0.5 5 1.0
336. LOAD COMB 2005 COMBINATION LOAD CASE
337. 32 1.75 3 1.75 1 1.3 2 0.5 5 1.0
338. LOAD COMB 2006 COMBINATION LOAD CASE
339. 33 1.75 3 1.75 1 1.3 2 0.5 5 1.0
340. LOAD COMB 2007 COMBINATION LOAD CASE
341. 34 1.75 3 1.75 1 1.3 2 0.5 5 1.0
342. LOAD COMB 2008 COMBINATION LOAD CASE
343. 35 1.75 3 1.75 1 1.3 2 0.5 5 1.0
344. LOAD COMB 2009 COMBINATION LOAD CASE
345. 36 1.75 3 1.75 1 1.3 2 0.5 5 1.0
346. LOAD COMB 3000 COMBINATION LOAD CASE -CRACK CONTROL-MAX OUTSIDE
347. 27 1.0 3 1.0 1 1.0 2 1.0 4 1.0
348. LOAD COMB 3001 COMBINATION LOAD CASE
349. 28 1.0 3 1.0 1 1.0 2 1.0 4 1.0
350. LOAD COMB 3002 COMBINATION LOAD CASE
351. 29 1.0 3 1.0 1 1.0 2 1.0 4 1.0
352. LOAD COMB 3003 COMBINATION LOAD CASE
```

```
353. 30 1.0 3 1.0 1 1.0 2 1.0 4 1.0
354. LOAD COMB 3004 COMBINATION LOAD CASE
355. 31 1.0 3 1.0 1 1.0 2 1.0 4 1.0
356. LOAD COMB 3005 COMBINATION LOAD CASE
357. 32 1.0 3 1.0 1 1.0 2 1.0 4 1.0
358. LOAD COMB 3006 COMBINATION LOAD CASE
359. 33 1.0 3 1.0 1 1.0 2 1.0 4 1.0
360. LOAD COMB 3007 COMBINATION LOAD CASE
361. 34 1.0 3 1.0 1 1.0 2 1.0 4 1.0
362. LOAD COMB 3008 COMBINATION LOAD CASE
363. 35 1.0 3 1.0 1 1.0 2 1.0 4 1.0
364. LOAD COMB 3009 COMBINATION LOAD CASE
365. 36 1.0 3 1.0 1 1.0 2 1.0 4 1.0
366. LOAD COMB 4000 COMBINATION LOAD CASE -CRACK CONTROL-MAX INSIDE
367. 27 1.0 3 1.0 1 1.0 2 0.5 5 1.0
368. LOAD COMB 4001 COMBINATION LOAD CASE
369. 28 1.0 3 1.0 1 1.0 2 0.5 5 1.0
370. LOAD COMB 4002 COMBINATION LOAD CASE
371. 29 1.0 3 1.0 1 1.0 2 0.5 5 1.0
372. LOAD COMB 4003 COMBINATION LOAD CASE
373. 30 1.0 3 1.0 1 1.0 2 0.5 5 1.0
374. LOAD COMB 4004 COMBINATION LOAD CASE
375. 31 1.0 3 1.0 1 1.0 2 0.5 5 1.0
376. LOAD COMB 4005 COMBINATION LOAD CASE
377. 32 1.0 3 1.0 1 1.0 2 0.5 5 1.0
378. LOAD COMB 4006 COMBINATION LOAD CASE
379. 33 1.0 3 1.0 1 1.0 2 0.5 5 1.0
380. LOAD COMB 4007 COMBINATION LOAD CASE
381. 34 1.0 3 1.0 1 1.0 2 0.5 5 1.0
382. LOAD COMB 4008 COMBINATION LOAD CASE
383. 35 1.0 3 1.0 1 1.0 2 0.5 5 1.0
384. LOAD COMB 4009 COMBINATION LOAD CASE
385. 36 1.0 3 1.0 1 1.0 2 0.5 5 1.0
386. LOAD COMB 5000 COMBINATION LOAD CASE -CHECK SUPPORT DISPL.
387. 27 1.0 3 1.0 1 1.0
388. LOAD COMB 5001 COMBINATION LOAD CASE
389. 28 1.0 3 1.0 1 1.0
390. LOAD COMB 5002 COMBINATION LOAD CASE
391. 29 1.0 3 1.0 1 1.0
392. LOAD COMB 5003 COMBINATION LOAD CASE
393. 30 1.0 3 1.0 1 1.0
394. LOAD COMB 5004 COMBINATION LOAD CASE
395. 31 1.0 3 1.0 1 1.0
396. LOAD COMB 5005 COMBINATION LOAD CASE
397. 32 1.0 3 1.0 1 1.0
398. LOAD COMB 5006 COMBINATION LOAD CASE
399. 33 1.0 3 1.0 1 1.0
400. LOAD COMB 5007 COMBINATION LOAD CASE
401. 34 1.0 3 1.0 1 1.0
402. LOAD COMB 5008 COMBINATION LOAD CASE
403. 35 1.0 3 1.0 1 1.0
404. LOAD COMB 5009 COMBINATION LOAD CASE
405. 36 1.0 3 1.0 1 1.0
406. LOAD COMB 6000 COMBINATION LOAD CASE -CHECK DEFLEC.
407. 27 1.0 3 1.0
408. LOAD COMB 6001 COMBINATION LOAD CASE
```

```
409. 28 1.0 3 1.0
410. LOAD COMB 6002 COMBINATION LOAD CASE
411. 29 1.0 3 1.0
412. LOAD COMB 6003 COMBINATION LOAD CASE
413. 30 1.0 3 1.0
414. LOAD COMB 6004 COMBINATION LOAD CASE
415. 31 1.0 3 1.0
416. LOAD COMB 6005 COMBINATION LOAD CASE
417. 32 1.0 3 1.0
418. LOAD COMB 6006 COMBINATION LOAD CASE
419. 33 1.0 3 1.0
420. LOAD COMB 6007 COMBINATION LOAD CASE
421. 34 1.0 3 1.0
422. LOAD COMB 6008 COMBINATION LOAD CASE
423. 35 1.0 3 1.0
424. LOAD COMB 6009 COMBINATION LOAD CASE
425. 36 1.0 3 1.0
426. ***
427. LOAD COMB 7000 COMBINATION LOAD CASE -DL
428. 1 1.0 2 1.0 4 1.0
429. LOAD COMB 7001 COMBINATION LOAD CASE -DL
430. 1 1.0 2 0.5 5 1.0
431. ***
432. LOAD COMB 8000 COMBINATION LOAD CASE -LL
433. 27 1.0 3 1.0
434. LOAD COMB 8001 COMBINATION LOAD CASE
435. 28 1.0 3 1.0
436. LOAD COMB 8002 COMBINATION LOAD CASE
437. 29 1.0 3 1.0
438. LOAD COMB 8003 COMBINATION LOAD CASE
439. 30 1.0 3 1.0
440. LOAD COMB 8004 COMBINATION LOAD CASE
441. 31 1.0 3 1.0
442. LOAD COMB 8005 COMBINATION LOAD CASE
443. 32 1.0 3 1.0
444. LOAD COMB 8006 COMBINATION LOAD CASE
445. 33 1.0 3 1.0
446. LOAD COMB 8007 COMBINATION LOAD CASE
447. 34 1.0 3 1.0
448. LOAD COMB 8008 COMBINATION LOAD CASE
449. 35 1.0 3 1.0
450. LOAD COMB 8009 COMBINATION LOAD CASE
451. 36 1.0 3 1.0 1
452. PERFORM ANALYSIS
```

```
        P R O B L E M   S T A T I S T I C S
        -----------------------------------

  NUMBER OF JOINTS          7  NUMBER OF MEMBERS       6
  NUMBER OF PLATES          0  NUMBER OF SOLIDS        0
  NUMBER OF SURFACES        0  NUMBER OF SUPPORTS       2

       SOLVER USED IS THE OUT-OF-CORE BASIC SOLVER

  ORIGINAL/FINAL BAND-WIDTH=     5/     5/     31 DOF
TOTAL       PRIMARY LOAD CASES =    33, TOTAL DEGREES OF FREEDOM =      32
TOTAL LOAD COMBINATION  CASES =   186  SO FAR.
  SIZE OF STIFFNESS MATRIX =        1 DOUBLE  KILO-WORDS
  REQRD/AVAIL. DISK SPACE  =     12.0/      0.0 MB
```

```
453. ***LOAD LIST 1 2 4 5 7 TO 28
454. ***PRINT SUPPORT REACTION ALL
455. LOAD LIST 300 TO 315 400 TO 415 3000 TO 3009 4000 TO 4009
456. PRINT SUPPORT REACTION ALL
```

SUPPORT REACTIONS -UNIT KIP FEET STRUCTURE TYPE = SPACE

JOINT	LOAD	FORCE-X	FORCE-Y	FORCE-Z	MOM-X	MOM-Y	MOM Z
1	300	12.18	11.25	0.00	0.00	0.00	0.00
	301	12.43	11.18	0.00	0.00	0.00	0.00
	302	12.65	11.12	0.00	0.00	0.00	0.00
	303	12.84	11.05	0.00	0.00	0.00	0.00
	304	12.95	11.00	0.00	0.00	0.00	0.00
	305	13.77	14.66	0.00	0.00	0.00	0.00
	306	14.81	14.33	0.00	0.00	0.00	0.00
	307	15.71	14.00	0.00	0.00	0.00	0.00
	308	16.22	13.75	0.00	0.00	0.00	0.00
	309	16.77	13.42	0.00	0.00	0.00	0.00
	310	18.13	16.72	0.00	0.00	0.00	0.00
	311	19.19	16.12	0.00	0.00	0.00	0.00
	312	19.97	15.54	0.00	0.00	0.00	0.00
	313	20.16	15.03	0.00	0.00	0.00	0.00
	314	20.21	14.43	0.00	0.00	0.00	0.00
	315	19.90	13.83	0.00	0.00	0.00	0.00
	400	13.90	11.25	0.00	0.00	0.00	0.00
	401	14.15	11.18	0.00	0.00	0.00	0.00
	402	14.37	11.12	0.00	0.00	0.00	0.00
	403	14.57	11.05	0.00	0.00	0.00	0.00
	404	14.68	11.00	0.00	0.00	0.00	0.00
	405	15.49	14.66	0.00	0.00	0.00	0.00
	406	16.53	14.33	0.00	0.00	0.00	0.00
	407	17.43	14.00	0.00	0.00	0.00	0.00
	408	17.94	13.75	0.00	0.00	0.00	0.00
	409	18.49	13.42	0.00	0.00	0.00	0.00
	410	19.86	16.72	0.00	0.00	0.00	0.00
	411	20.91	16.12	0.00	0.00	0.00	0.00
	412	21.69	15.54	0.00	0.00	0.00	0.00
	413	21.88	15.03	0.00	0.00	0.00	0.00
	414	21.93	14.43	0.00	0.00	0.00	0.00
	415	21.62	13.83	0.00	0.00	0.00	0.00
	3000	12.37	13.28	0.00	0.00	0.00	0.00
	3001	13.14	13.07	0.00	0.00	0.00	0.00
	3002	14.64	15.71	0.00	0.00	0.00	0.00
	3003	15.97	15.29	0.00	0.00	0.00	0.00
	3004	16.96	14.94	0.00	0.00	0.00	0.00
	3005	17.72	14.59	0.00	0.00	0.00	0.00
	3006	18.40	14.17	0.00	0.00	0.00	0.00
	3007	18.81	13.76	0.00	0.00	0.00	0.00
	3008	18.94	13.34	0.00	0.00	0.00	0.00
	3009	18.80	12.92	0.00	0.00	0.00	0.00
	4000	14.09	13.28	0.00	0.00	0.00	0.00
	4001	14.86	13.07	0.00	0.00	0.00	0.00
	4002	16.36	15.71	0.00	0.00	0.00	0.00
	4003	17.69	15.29	0.00	0.00	0.00	0.00

SUPPORT REACTIONS -UNIT KIP FEET STRUCTURE TYPE = SPACE

JOINT	LOAD	FORCE-X	FORCE-Y	FORCE-Z	MOM-X	MOM-Y	MOM Z
	4004	18.68	14.94	0.00	0.00	0.00	0.00
	4005	19.44	14.59	0.00	0.00	0.00	0.00
	4006	20.12	14.17	0.00	0.00	0.00	0.00
	4007	20.53	13.76	0.00	0.00	0.00	0.00
	4008	20.66	13.34	0.00	0.00	0.00	0.00
	4009	20.52	12.92	0.00	0.00	0.00	0.00
2	300	-12.18	10.32	0.00	0.00	0.00	0.00
	301	-12.43	10.38	0.00	0.00	0.00	0.00
	302	-12.65	10.45	0.00	0.00	0.00	0.00
	303	-12.84	10.52	0.00	0.00	0.00	0.00
	304	-12.95	10.56	0.00	0.00	0.00	0.00
	305	-13.77	10.81	0.00	0.00	0.00	0.00
	306	-14.81	11.14	0.00	0.00	0.00	0.00
	307	-15.71	11.47	0.00	0.00	0.00	0.00
	308	-16.22	11.72	0.00	0.00	0.00	0.00
	309	-16.77	12.05	0.00	0.00	0.00	0.00
	310	-18.13	12.65	0.00	0.00	0.00	0.00
	311	-19.19	13.24	0.00	0.00	0.00	0.00
	312	-19.97	13.82	0.00	0.00	0.00	0.00
	313	-20.16	14.34	0.00	0.00	0.00	0.00
	314	-20.21	14.94	0.00	0.00	0.00	0.00
	315	-19.90	14.56	0.00	0.00	0.00	0.00
	400	-13.90	10.32	0.00	0.00	0.00	0.00
	401	-14.15	10.38	0.00	0.00	0.00	0.00
	402	-14.37	10.45	0.00	0.00	0.00	0.00
	403	-14.57	10.52	0.00	0.00	0.00	0.00
	404	-14.68	10.56	0.00	0.00	0.00	0.00
	405	-15.49	10.81	0.00	0.00	0.00	0.00
	406	-16.53	11.14	0.00	0.00	0.00	0.00
	407	-17.43	11.47	0.00	0.00	0.00	0.00
	408	-17.94	11.72	0.00	0.00	0.00	0.00
	409	-18.49	12.05	0.00	0.00	0.00	0.00
	410	-19.86	12.65	0.00	0.00	0.00	0.00
	411	-20.91	13.24	0.00	0.00	0.00	0.00
	412	-21.69	13.82	0.00	0.00	0.00	0.00
	413	-21.88	14.34	0.00	0.00	0.00	0.00
	414	-21.93	14.94	0.00	0.00	0.00	0.00
	415	-21.62	14.56	0.00	0.00	0.00	0.00
	3000	-12.37	10.37	0.00	0.00	0.00	0.00
	3001	-13.14	10.57	0.00	0.00	0.00	0.00
	3002	-14.64	10.99	0.00	0.00	0.00	0.00
	3003	-15.97	11.40	0.00	0.00	0.00	0.00
	3004	-16.96	11.75	0.00	0.00	0.00	0.00
	3005	-17.72	12.10	0.00	0.00	0.00	0.00
	3006	-18.40	12.52	0.00	0.00	0.00	0.00
	3007	-18.81	12.93	0.00	0.00	0.00	0.00

SUPPORT REACTIONS -UNIT KIP FEET STRUCTURE TYPE = SPACE

JOINT	LOAD	FORCE-X	FORCE-Y	FORCE-Z	MOM-X	MOM-Y	MOM Z
3008		-18.94	13.35	0.00	0.00	0.00	0.00
3009		-18.80	13.77	0.00	0.00	0.00	0.00
4000		-14.09	10.37	0.00	0.00	0.00	0.00
4001		-14.86	10.57	0.00	0.00	0.00	0.00
4002		-16.36	10.99	0.00	0.00	0.00	0.00
4003		-17.69	11.40	0.00	0.00	0.00	0.00
4004		-18.68	11.75	0.00	0.00	0.00	0.00
4005		-19.44	12.10	0.00	0.00	0.00	0.00
4006		-20.12	12.52	0.00	0.00	0.00	0.00
4007		-20.53	12.93	0.00	0.00	0.00	0.00
4008		-20.66	13.35	0.00	0.00	0.00	0.00
4009		-20.52	13.77	0.00	0.00	0.00	0.00

********** END OF LATEST ANALYSIS RESULT **********

```
457. ***DL
458. LOAD LIST 700 701 7000 7001
459. PRINT SUPPORT REACTION ALL
```

SUPPORT REACTIONS -UNIT KIP FEET STRUCTURE TYPE = SPACE

JOINT	LOAD	FORCE-X	FORCE-Y	FORCE-Z	MOM-X	MOM-Y	MOM Z
1	700	10.01	8.95	0.00	0.00	0.00	0.00
	701	11.73	8.95	0.00	0.00	0.00	0.00
	7000	10.01	8.95	0.00	0.00	0.00	0.00
	7001	11.73	8.95	0.00	0.00	0.00	0.00
2	700	-10.01	8.95	0.00	0.00	0.00	0.00
	701	-11.73	8.95	0.00	0.00	0.00	0.00
	7000	-10.01	8.95	0.00	0.00	0.00	0.00
	7001	-11.73	8.95	0.00	0.00	0.00	0.00

********** END OF LATEST ANALYSIS RESULT **********

```
460. ***LL
461. LOAD LIST 800 TO 815 8000 TO 8009
462. PRINT SUPPORT REACTION ALL
```

SUPPORT REACTIONS -UNIT KIP FEET STRUCTURE TYPE = SPACE

JOINT	LOAD	FORCE-X	FORCE-Y	FORCE-Z	MOM-X	MOM-Y	MOM Z
1	800	2.17	2.30	0.00	0.00	0.00	0.00
	801	2.42	2.23	0.00	0.00	0.00	0.00
	802	2.64	2.17	0.00	0.00	0.00	0.00
	803	2.83	2.10	0.00	0.00	0.00	0.00
	804	2.94	2.05	0.00	0.00	0.00	0.00
	805	3.76	5.71	0.00	0.00	0.00	0.00
	806	4.80	5.38	0.00	0.00	0.00	0.00
	807	5.70	5.05	0.00	0.00	0.00	0.00
	808	6.21	4.80	0.00	0.00	0.00	0.00
	809	6.76	4.47	0.00	0.00	0.00	0.00
	810	8.13	7.77	0.00	0.00	0.00	0.00
	811	9.18	7.17	0.00	0.00	0.00	0.00
	812	9.96	6.60	0.00	0.00	0.00	0.00
	813	10.15	6.08	0.00	0.00	0.00	0.00
	814	10.20	5.48	0.00	0.00	0.00	0.00
	815	9.89	4.88	0.00	0.00	0.00	0.00
	8000	2.36	4.33	0.00	0.00	0.00	0.00
	8001	3.13	4.12	0.00	0.00	0.00	0.00
	8002	4.63	6.76	0.00	0.00	0.00	0.00
	8003	5.96	6.34	0.00	0.00	0.00	0.00
	8004	6.95	5.99	0.00	0.00	0.00	0.00
	8005	7.71	5.64	0.00	0.00	0.00	0.00
	8006	8.39	5.22	0.00	0.00	0.00	0.00
	8007	8.80	4.81	0.00	0.00	0.00	0.00
	8008	8.93	4.39	0.00	0.00	0.00	0.00
	8009	8.79	3.97	0.00	0.00	0.00	0.00
2	800	-2.17	1.37	0.00	0.00	0.00	0.00
	801	-2.42	1.43	0.00	0.00	0.00	0.00
	802	-2.64	1.50	0.00	0.00	0.00	0.00
	803	-2.83	1.57	0.00	0.00	0.00	0.00
	804	-2.94	1.61	0.00	0.00	0.00	0.00
	805	-3.76	1.86	0.00	0.00	0.00	0.00
	806	-4.80	2.19	0.00	0.00	0.00	0.00
	807	-5.70	2.52	0.00	0.00	0.00	0.00
	808	-6.21	2.77	0.00	0.00	0.00	0.00
	809	-6.76	3.10	0.00	0.00	0.00	0.00
	810	-8.13	3.70	0.00	0.00	0.00	0.00
	811	-9.18	4.30	0.00	0.00	0.00	0.00
	812	-9.96	4.87	0.00	0.00	0.00	0.00
	813	-10.15	5.39	0.00	0.00	0.00	0.00
	814	-10.20	5.99	0.00	0.00	0.00	0.00
	815	-9.89	5.61	0.00	0.00	0.00	0.00
	8000	-2.36	1.42	0.00	0.00	0.00	0.00
	8001	-3.13	1.62	0.00	0.00	0.00	0.00
	8002	-4.63	2.04	0.00	0.00	0.00	0.00
	8003	-5.96	2.45	0.00	0.00	0.00	0.00

SUPPORT REACTIONS -UNIT KIP FEET STRUCTURE TYPE = SPACE

JOINT	LOAD	FORCE-X	FORCE-Y	FORCE-Z	MOM-X	MOM-Y	MOM Z
	8004	-6.95	2.80	0.00	0.00	0.00	0.00
	8005	-7.71	3.15	0.00	0.00	0.00	0.00
	8006	-8.39	3.57	0.00	0.00	0.00	0.00
	8007	-8.80	3.98	0.00	0.00	0.00	0.00
	8008	-8.93	4.40	0.00	0.00	0.00	0.00
	8009	-8.79	4.82	0.00	0.00	0.00	0.00

********** END OF LATEST ANALYSIS RESULT **********

```
463. *** BEAM DISPLACEMENTS AT CL FROM 1.0LL
464. LOAD LIST 600 TO 615 6000 TO 6009
465. PRINT JOINT DISPLACEMENTS LIST 5
```

JOINT DISPLACEMENT (INCH RADIANS) STRUCTURE TYPE = SPACE

JOINT	LOAD	X-TRANS	Y-TRANS	Z-TRANS	X-ROTAN	Y-ROTAN	Z-ROTAN
5	600	0.00110	-0.03394	0.00000	0.00000	0.00000	0.00001
	601	0.00360	-0.03545	0.00000	0.00000	0.00000	0.00004
	602	0.00525	-0.03853	0.00000	0.00000	0.00000	0.00007
	603	0.00590	-0.04298	0.00000	0.00000	0.00000	0.00010
	604	0.00571	-0.04667	0.00000	0.00000	0.00000	0.00010
	605	0.01272	-0.05335	0.00000	0.00000	0.00000	0.00019
	606	0.01987	-0.06617	0.00000	0.00000	0.00000	0.00030
	607	0.02305	-0.08296	0.00000	0.00000	0.00000	0.00036
	608	0.02210	-0.09525	0.00000	0.00000	0.00000	0.00034
	609	0.01822	-0.11356	0.00000	0.00000	0.00000	0.00033
	610	0.02271	-0.13307	0.00000	0.00000	0.00000	0.00041
	611	0.02202	-0.15407	0.00000	0.00000	0.00000	0.00040
	612	0.01730	-0.17304	0.00000	0.00000	0.00000	0.00027
	613	0.00979	-0.17631	0.00000	0.00000	0.00000	0.00009
	614	0.00095	-0.17948	0.00000	0.00000	0.00000	0.00000
	615	-0.00785	-0.17747	0.00000	0.00000	0.00000	-0.00008
	6000	0.00345	-0.03386	0.00000	0.00000	0.00000	0.00004
	6001	0.01127	-0.03861	0.00000	0.00000	0.00000	0.00014
	6002	0.02535	-0.05074	0.00000	0.00000	0.00000	0.00034
	6003	0.03348	-0.07269	0.00000	0.00000	0.00000	0.00051
	6004	0.03601	-0.09681	0.00000	0.00000	0.00000	0.00061
	6005	0.03283	-0.12494	0.00000	0.00000	0.00000	0.00063
	6006	0.02483	-0.15674	0.00000	0.00000	0.00000	0.00056
	6007	0.01321	-0.18051	0.00000	0.00000	0.00000	0.00034
	6008	-0.00018	-0.18918	0.00000	0.00000	0.00000	0.00000
	6009	-0.01355	-0.18004	0.00000	0.00000	0.00000	-0.00035

********** END OF LATEST ANALYSIS RESULT **********

```
466. *** SUPPORT DISPLACEMENTS FROM 1.0DL+1.0LL
467. LOAD LIST 500 TO 515 5000 TO 5009
468. PRINT JOINT DISPLACEMENTS LIST 2
```

JOINT DISPLACEMENT (INCH RADIANS) STRUCTURE TYPE = SPACE

JOINT	LOAD	X-TRANS	Y-TRANS	Z-TRANS	X-ROTAN	Y-ROTAN	Z-ROTAN
2	500	0.00000	0.00000	0.00000	0.00000	0.00000	-0.00031
	501	0.00000	0.00000	0.00000	0.00000	0.00000	-0.00036
	502	0.00000	0.00000	0.00000	0.00000	0.00000	-0.00039
	503	0.00000	0.00000	0.00000	0.00000	0.00000	-0.00040
	504	0.00000	0.00000	0.00000	0.00000	0.00000	-0.00040
	505	0.00000	0.00000	0.00000	0.00000	0.00000	-0.00053
	506	0.00000	0.00000	0.00000	0.00000	0.00000	-0.00067
	507	0.00000	0.00000	0.00000	0.00000	0.00000	-0.00074
	508	0.00000	0.00000	0.00000	0.00000	0.00000	-0.00073
	509	0.00000	0.00000	0.00000	0.00000	0.00000	-0.00069
	510	0.00000	0.00000	0.00000	0.00000	0.00000	-0.00079
	511	0.00000	0.00000	0.00000	0.00000	0.00000	-0.00080
	512	0.00000	0.00000	0.00000	0.00000	0.00000	-0.00075
	513	0.00000	0.00000	0.00000	0.00000	0.00000	-0.00063
	514	0.00000	0.00000	0.00000	0.00000	0.00000	-0.00049
	515	0.00000	0.00000	0.00000	0.00000	0.00000	-0.00035
	5000	0.00000	0.00000	0.00000	0.00000	0.00000	-0.00035
	5001	0.00000	0.00000	0.00000	0.00000	0.00000	-0.00049
	5002	0.00000	0.00000	0.00000	0.00000	0.00000	-0.00074
	5003	0.00000	0.00000	0.00000	0.00000	0.00000	-0.00090
	5004	0.00000	0.00000	0.00000	0.00000	0.00000	-0.00097
	5005	0.00000	0.00000	0.00000	0.00000	0.00000	-0.00094
	5006	0.00000	0.00000	0.00000	0.00000	0.00000	-0.00083
	5007	0.00000	0.00000	0.00000	0.00000	0.00000	-0.00066
	5008	0.00000	0.00000	0.00000	0.00000	0.00000	-0.00046
	5009	0.00000	0.00000	0.00000	0.00000	0.00000	-0.00025

********** END OF LATEST ANALYSIS RESULT **********

469. LOAD LIST 300 TO 315 400 TO 415 3000 TO 3009 4000 TO 4009
470. PRINT MEMBER FORCES ALL

MEMBER END FORCES STRUCTURE TYPE = SPACE

ALL UNITS ARE -- KIP FEET (LOCAL)

MEMBER	LOAD	JT	AXIAL	SHEAR-Y	SHEAR-Z	TORSION	MOM-Y	MOM-Z
1	300	1	13.08	-10.18	0.00	0.00	0.00	0.00
		3	-12.33	13.22	0.00	0.00	0.00	-54.42
	301	1	13.06	-10.44	0.00	0.00	0.00	0.00
		3	-12.30	13.48	0.00	0.00	0.00	-55.59
	302	1	13.03	-10.67	0.00	0.00	0.00	0.00
		3	-12.28	13.71	0.00	0.00	0.00	-56.66
	303	1	12.99	-10.87	0.00	0.00	0.00	0.00
		3	-12.24	13.91	0.00	0.00	0.00	-57.59
	304	1	12.97	-10.99	0.00	0.00	0.00	0.00
		3	-12.21	14.03	0.00	0.00	0.00	-58.13
	305	1	16.71	-11.20	0.00	0.00	0.00	0.00
		3	-15.95	14.23	0.00	0.00	0.00	-59.09
	306	1	16.55	-12.28	0.00	0.00	0.00	0.00
		3	-15.80	15.31	0.00	0.00	0.00	-64.06
	307	1	16.37	-13.22	0.00	0.00	0.00	0.00
		3	-15.62	16.25	0.00	0.00	0.00	-68.38
	308	1	16.21	-13.76	0.00	0.00	0.00	0.00
		3	-15.45	16.80	0.00	0.00	0.00	-70.88
	309	1	15.97	-14.36	0.00	0.00	0.00	0.00
		3	-15.22	17.40	0.00	0.00	0.00	-73.67
	310	1	19.45	-15.17	0.00	0.00	0.00	0.00
		3	-18.70	18.21	0.00	0.00	0.00	-77.37
	311	1	19.03	-16.30	0.00	0.00	0.00	0.00
		3	-18.28	19.34	0.00	0.00	0.00	-82.60
	312	1	18.59	-17.17	0.00	0.00	0.00	0.00
		3	-17.84	20.21	0.00	0.00	0.00	-86.59
	313	1	18.11	-17.44	0.00	0.00	0.00	0.00
		3	-17.36	20.47	0.00	0.00	0.00	-87.82
	314	1	17.53	-17.59	0.00	0.00	0.00	0.00
		3	-16.78	20.63	0.00	0.00	0.00	-88.51
	315	1	16.89	-17.38	0.00	0.00	0.00	0.00
		3	-16.14	20.41	0.00	0.00	0.00	-87.54
	400	1	13.36	-11.88	0.00	0.00	0.00	0.00
		3	-12.16	12.22	0.00	0.00	0.00	-55.26
	401	1	13.34	-12.14	0.00	0.00	0.00	0.00
		3	-12.14	12.47	0.00	0.00	0.00	-56.43
	402	1	13.31	-12.37	0.00	0.00	0.00	0.00
		3	-12.11	12.70	0.00	0.00	0.00	-57.50
	403	1	13.27	-12.57	0.00	0.00	0.00	0.00
		3	-12.08	12.90	0.00	0.00	0.00	-58.43
	404	1	13.25	-12.69	0.00	0.00	0.00	0.00
		3	-12.05	13.02	0.00	0.00	0.00	-58.97

MEMBER END FORCES STRUCTURE TYPE = SPACE

ALL UNITS ARE -- KIP FEET (LOCAL)

MEMBER	LOAD	JT	AXIAL	SHEAR-Y	SHEAR-Z	TORSION	MOM-Y	MOM-Z
405		1	16.99	-12.90	0.00	0.00	0.00	0.00
		3	-15.79	13.23	0.00	0.00	0.00	-59.93
406		1	16.83	-13.98	0.00	0.00	0.00	0.00
		3	-15.63	14.31	0.00	0.00	0.00	-64.90
407		1	16.65	-14.91	0.00	0.00	0.00	0.00
		3	-15.45	15.25	0.00	0.00	0.00	-69.22
408		1	16.49	-15.46	0.00	0.00	0.00	0.00
		3	-15.29	15.79	0.00	0.00	0.00	-71.72
409		1	16.25	-16.06	0.00	0.00	0.00	0.00
		3	-15.05	16.40	0.00	0.00	0.00	-74.51
410		1	19.73	-16.87	0.00	0.00	0.00	0.00
		3	-18.53	17.20	0.00	0.00	0.00	-78.21
411		1	19.31	-18.00	0.00	0.00	0.00	0.00
		3	-18.11	18.34	0.00	0.00	0.00	-83.44
412		1	18.87	-18.87	0.00	0.00	0.00	0.00
		3	-17.67	19.20	0.00	0.00	0.00	-87.43
413		1	18.39	-19.14	0.00	0.00	0.00	0.00
		3	-17.19	19.47	0.00	0.00	0.00	-88.66
414		1	17.81	-19.29	0.00	0.00	0.00	0.00
		3	-16.61	19.62	0.00	0.00	0.00	-89.36
415		1	17.17	-19.08	0.00	0.00	0.00	0.00
		3	-15.97	19.41	0.00	0.00	0.00	-88.39
3000		1	15.11	-10.04	0.00	0.00	0.00	0.00
		3	-14.36	13.08	0.00	0.00	0.00	-53.76
3001		1	15.04	-10.84	0.00	0.00	0.00	0.00
		3	-14.28	13.87	0.00	0.00	0.00	-57.42
3002		1	17.88	-11.89	0.00	0.00	0.00	0.00
		3	-17.13	14.92	0.00	0.00	0.00	-62.26
3003		1	17.69	-13.27	0.00	0.00	0.00	0.00
		3	-16.94	16.31	0.00	0.00	0.00	-68.62
3004		1	17.50	-14.30	0.00	0.00	0.00	0.00
		3	-16.75	17.34	0.00	0.00	0.00	-73.37
3005		1	17.28	-15.11	0.00	0.00	0.00	0.00
		3	-16.53	18.15	0.00	0.00	0.00	-77.10
3006		1	16.98	-15.85	0.00	0.00	0.00	0.00
		3	-16.23	18.89	0.00	0.00	0.00	-80.50
3007		1	16.64	-16.32	0.00	0.00	0.00	0.00
		3	-15.88	19.36	0.00	0.00	0.00	-82.66
3008		1	16.25	-16.52	0.00	0.00	0.00	0.00
		3	-15.49	19.55	0.00	0.00	0.00	-83.58
3009		1	15.81	-16.45	0.00	0.00	0.00	0.00
		3	-15.06	19.48	0.00	0.00	0.00	-83.26
4000		1	15.39	-11.74	0.00	0.00	0.00	0.00
		3	-14.19	12.07	0.00	0.00	0.00	-54.60
4001		1	15.32	-12.53	0.00	0.00	0.00	0.00
		3	-14.12	12.87	0.00	0.00	0.00	-58.26

MEMBER END FORCES STRUCTURE TYPE = SPACE

ALL UNITS ARE -- KIP FEET (LOCAL)

MEMBER	LOAD	JT	AXIAL	SHEAR-Y	SHEAR-Z	TORSION	MOM-Y	MOM-Z
	4002	1	18.16	-13.58	0.00	0.00	0.00	0.00
		3	-16.96	13.92	0.00	0.00	0.00	-63.10
	4003	1	17.97	-14.97	0.00	0.00	0.00	0.00
		3	-16.77	15.30	0.00	0.00	0.00	-69.47
	4004	1	17.78	-16.00	0.00	0.00	0.00	0.00
		3	-16.59	16.33	0.00	0.00	0.00	-74.21
	4005	1	17.56	-16.81	0.00	0.00	0.00	0.00
		3	-16.36	17.14	0.00	0.00	0.00	-77.94
	4006	1	17.26	-17.55	0.00	0.00	0.00	0.00
		3	-16.06	17.88	0.00	0.00	0.00	-81.34
	4007	1	16.92	-18.02	0.00	0.00	0.00	0.00
		3	-15.72	18.35	0.00	0.00	0.00	-83.51
	4008	1	16.53	-18.22	0.00	0.00	0.00	0.00
		3	-15.33	18.55	0.00	0.00	0.00	-84.42
	4009	1	16.09	-18.15	0.00	0.00	0.00	0.00
		3	-14.89	18.48	0.00	0.00	0.00	-84.10
2	300	2	12.16	-10.34	0.00	0.00	0.00	0.00
		7	-11.41	13.37	0.00	0.00	0.00	-55.12
	301	2	12.27	-10.57	0.00	0.00	0.00	0.00
		7	-11.52	13.61	0.00	0.00	0.00	-56.19
	302	2	12.37	-10.78	0.00	0.00	0.00	0.00
		7	-11.62	13.82	0.00	0.00	0.00	-57.16
	303	2	12.47	-10.96	0.00	0.00	0.00	0.00
		7	-11.71	14.00	0.00	0.00	0.00	-57.99
	304	2	12.53	-11.06	0.00	0.00	0.00	0.00
		7	-11.78	14.10	0.00	0.00	0.00	-58.46
	305	2	12.90	-11.83	0.00	0.00	0.00	0.00
		7	-12.15	14.86	0.00	0.00	0.00	-61.98
	306	2	13.40	-12.80	0.00	0.00	0.00	0.00
		7	-12.65	15.83	0.00	0.00	0.00	-66.45
	307	2	13.87	-13.63	0.00	0.00	0.00	0.00
		7	-13.12	16.67	0.00	0.00	0.00	-70.28
	308	2	14.20	-14.09	0.00	0.00	0.00	0.00
		7	-13.45	17.13	0.00	0.00	0.00	-72.40
	309	2	14.62	-14.59	0.00	0.00	0.00	0.00
		7	-13.87	17.62	0.00	0.00	0.00	-74.69
	310	2	15.43	-15.83	0.00	0.00	0.00	0.00
		7	-14.68	18.87	0.00	0.00	0.00	-80.43
	311	2	16.19	-16.77	0.00	0.00	0.00	0.00
		7	-15.44	19.81	0.00	0.00	0.00	-84.76
	312	2	16.89	-17.45	0.00	0.00	0.00	0.00
		7	-16.14	20.49	0.00	0.00	0.00	-87.89
	313	2	17.43	-17.55	0.00	0.00	0.00	0.00
		7	-16.68	20.59	0.00	0.00	0.00	-88.34

MEMBER END FORCES STRUCTURE TYPE = SPACE

ALL UNITS ARE -- KIP FEET (LOCAL)

MEMBER	LOAD	JT	AXIAL	SHEAR-Y	SHEAR-Z	TORSION	MOM-Y	MOM-Z
314		2	18.03	-17.51	0.00	0.00	0.00	0.00
		7	-17.28	20.54	0.00	0.00	0.00	-88.13
315		2	17.60	-17.26	0.00	0.00	0.00	0.00
		7	-16.85	20.30	0.00	0.00	0.00	-87.00
400		2	12.44	-12.03	0.00	0.00	0.00	0.00
		7	-11.25	12.37	0.00	0.00	0.00	-55.96
401		2	12.55	-12.27	0.00	0.00	0.00	0.00
		7	-11.35	12.60	0.00	0.00	0.00	-57.03
402		2	12.65	-12.48	0.00	0.00	0.00	0.00
		7	-11.45	12.81	0.00	0.00	0.00	-58.00
403		2	12.75	-12.66	0.00	0.00	0.00	0.00
		7	-11.55	12.99	0.00	0.00	0.00	-58.83
404		2	12.81	-12.76	0.00	0.00	0.00	0.00
		7	-11.61	13.09	0.00	0.00	0.00	-59.30
405		2	13.18	-13.52	0.00	0.00	0.00	0.00
		7	-11.99	13.86	0.00	0.00	0.00	-62.82
406		2	13.68	-14.50	0.00	0.00	0.00	0.00
		7	-12.48	14.83	0.00	0.00	0.00	-67.30
407		2	14.15	-15.33	0.00	0.00	0.00	0.00
		7	-12.95	15.66	0.00	0.00	0.00	-71.12
408		2	14.48	-15.79	0.00	0.00	0.00	0.00
		7	-13.28	16.12	0.00	0.00	0.00	-73.24
409		2	14.90	-16.29	0.00	0.00	0.00	0.00
		7	-13.70	16.62	0.00	0.00	0.00	-75.53
410		2	15.71	-17.53	0.00	0.00	0.00	0.00
		7	-14.51	17.86	0.00	0.00	0.00	-81.27
411		2	16.47	-18.47	0.00	0.00	0.00	0.00
		7	-15.27	18.80	0.00	0.00	0.00	-85.60
412		2	17.17	-19.15	0.00	0.00	0.00	0.00
		7	-15.97	19.48	0.00	0.00	0.00	-88.73
413		2	17.71	-19.25	0.00	0.00	0.00	0.00
		7	-16.51	19.58	0.00	0.00	0.00	-89.18
414		2	18.31	-19.20	0.00	0.00	0.00	0.00
		7	-17.11	19.54	0.00	0.00	0.00	-88.98
415		2	17.88	-18.96	0.00	0.00	0.00	0.00
		7	-16.69	19.29	0.00	0.00	0.00	-87.84
3000		2	12.24	-10.52	0.00	0.00	0.00	0.00
		7	-11.49	13.55	0.00	0.00	0.00	-55.94
3001		2	12.57	-11.24	0.00	0.00	0.00	0.00
		7	-11.82	14.28	0.00	0.00	0.00	-59.29
3002		2	13.22	-12.66	0.00	0.00	0.00	0.00
		7	-12.47	15.69	0.00	0.00	0.00	-65.80
3003		2	13.85	-13.90	0.00	0.00	0.00	0.00
		7	-13.10	16.94	0.00	0.00	0.00	-71.54
3004		2	14.36	-14.82	0.00	0.00	0.00	0.00
		7	-13.60	17.86	0.00	0.00	0.00	-75.77

MEMBER END FORCES STRUCTURE TYPE = SPACE

ALL UNITS ARE -- KIP FEET (LOCAL)

MEMBER	LOAD	JT	AXIAL	SHEAR-Y	SHEAR-Z	TORSION	MOM-Y	MOM-Z
	3005	2	14.83	-15.51	0.00	0.00	0.00	0.00
		7	-14.07	18.55	0.00	0.00	0.00	-78.96
	3006	2	15.35	-16.12	0.00	0.00	0.00	0.00
		7	-14.60	19.16	0.00	0.00	0.00	-81.74
	3007	2	15.83	-16.45	0.00	0.00	0.00	0.00
		7	-15.07	19.49	0.00	0.00	0.00	-83.28
	3008	2	16.26	-16.52	0.00	0.00	0.00	0.00
		7	-15.51	19.55	0.00	0.00	0.00	-83.57
	3009	2	16.65	-16.31	0.00	0.00	0.00	0.00
		7	-15.89	19.35	0.00	0.00	0.00	-82.62
	4000	2	12.52	-12.21	0.00	0.00	0.00	0.00
		7	-11.32	12.55	0.00	0.00	0.00	-56.78
	4001	2	12.85	-12.94	0.00	0.00	0.00	0.00
		7	-11.65	13.27	0.00	0.00	0.00	-60.13
	4002	2	13.50	-14.35	0.00	0.00	0.00	0.00
		7	-12.30	14.69	0.00	0.00	0.00	-66.64
	4003	2	14.13	-15.60	0.00	0.00	0.00	0.00
		7	-12.93	15.93	0.00	0.00	0.00	-72.39
	4004	2	14.64	-16.52	0.00	0.00	0.00	0.00
		7	-13.44	16.85	0.00	0.00	0.00	-76.61
	4005	2	15.11	-17.21	0.00	0.00	0.00	0.00
		7	-13.91	17.55	0.00	0.00	0.00	-79.81
	4006	2	15.63	-17.82	0.00	0.00	0.00	0.00
		7	-14.43	18.15	0.00	0.00	0.00	-82.59
	4007	2	16.11	-18.15	0.00	0.00	0.00	0.00
		7	-14.91	18.48	0.00	0.00	0.00	-84.12
	4008	2	16.54	-18.21	0.00	0.00	0.00	0.00
		7	-15.34	18.55	0.00	0.00	0.00	-84.42
	4009	2	16.93	-18.01	0.00	0.00	0.00	0.00
		7	-15.73	18.34	0.00	0.00	0.00	-83.47
3	300	3	16.18	8.07	0.00	0.00	0.00	50.71
		4	-15.56	-3.08	0.00	0.00	0.00	-5.17
	301	3	16.41	7.97	0.00	0.00	0.00	51.88
		4	-15.79	-2.98	0.00	0.00	0.00	-4.30
	302	3	16.63	7.88	0.00	0.00	0.00	52.95
		4	-16.01	-2.89	0.00	0.00	0.00	-3.31
	303	3	16.81	7.79	0.00	0.00	0.00	53.88
		4	-16.19	-2.80	0.00	0.00	0.00	-2.15
	304	3	16.92	7.73	0.00	0.00	0.00	54.42
		4	-16.41	-3.71	0.00	0.00	0.00	-3.19
	305	3	18.18	11.26	0.00	0.00	0.00	54.40
		4	-17.19	-3.37	0.00	0.00	0.00	-2.40
	306	3	19.17	10.80	0.00	0.00	0.00	59.37
		4	-18.18	-2.91	0.00	0.00	0.00	0.11

MEMBER END FORCES STRUCTURE TYPE = SPACE

ALL UNITS ARE -- KIP FEET (LOCAL)

MEMBER	LOAD	JT	AXIAL	SHEAR-Y	SHEAR-Z	TORSION	MOM-Y	MOM-Z
307		3	20.02	10.36	0.00	0.00	0.00	63.70
		4	-19.03	-2.47	0.00	0.00	0.00	3.41
308		3	20.49	10.05	0.00	0.00	0.00	66.22
		4	-19.99	-6.03	0.00	0.00	0.00	5.95
309		3	21.01	9.65	0.00	0.00	0.00	69.05
		4	-20.50	-5.63	0.00	0.00	0.00	-0.49
310		3	22.77	12.76	0.00	0.00	0.00	71.82
		4	-21.78	-4.87	0.00	0.00	0.00	-2.40
311		3	23.74	12.03	0.00	0.00	0.00	77.11
		4	-22.75	-4.14	0.00	0.00	0.00	-2.61
312		3	24.44	11.36	0.00	0.00	0.00	81.19
		4	-23.46	-3.48	0.00	0.00	0.00	-1.12
313		3	24.56	10.83	0.00	0.00	0.00	82.53
		4	-24.06	-6.81	0.00	0.00	0.00	-3.30
314		3	24.54	10.23	0.00	0.00	0.00	83.37
		4	-24.04	-6.21	0.00	0.00	0.00	-9.57
315		3	24.16	9.67	0.00	0.00	0.00	82.57
		4	-23.65	-5.66	0.00	0.00	0.00	-13.78
400		3	15.17	8.19	0.00	0.00	0.00	51.64
		4	-14.54	-3.21	0.00	0.00	0.00	-4.95
401		3	15.40	8.10	0.00	0.00	0.00	52.80
		4	-14.78	-3.11	0.00	0.00	0.00	-4.09
402		3	15.62	8.00	0.00	0.00	0.00	53.87
		4	-15.00	-3.02	0.00	0.00	0.00	-3.09
403		3	15.80	7.91	0.00	0.00	0.00	54.80
		4	-15.18	-2.93	0.00	0.00	0.00	-1.93
404		3	15.91	7.85	0.00	0.00	0.00	55.34
		4	-15.40	-3.84	0.00	0.00	0.00	-2.98
405		3	17.17	11.38	0.00	0.00	0.00	55.32
		4	-16.18	-3.49	0.00	0.00	0.00	-2.19
406		3	18.16	10.92	0.00	0.00	0.00	60.30
		4	-17.17	-3.04	0.00	0.00	0.00	0.32
407		3	19.01	10.48	0.00	0.00	0.00	64.63
		4	-18.02	-2.60	0.00	0.00	0.00	3.63
408		3	19.48	10.17	0.00	0.00	0.00	67.15
		4	-18.98	-6.16	0.00	0.00	0.00	6.17
409		3	20.00	9.77	0.00	0.00	0.00	69.97
		4	-19.49	-5.76	0.00	0.00	0.00	-0.27
410		3	21.76	12.88	0.00	0.00	0.00	72.75
		4	-20.77	-4.99	0.00	0.00	0.00	-2.18
411		3	22.72	12.16	0.00	0.00	0.00	78.04
		4	-21.74	-4.27	0.00	0.00	0.00	-2.39
412		3	23.43	11.49	0.00	0.00	0.00	82.11
		4	-22.45	-3.60	0.00	0.00	0.00	-0.90
413		3	23.55	10.96	0.00	0.00	0.00	83.45
		4	-23.05	-6.94	0.00	0.00	0.00	-3.09

MEMBER END FORCES STRUCTURE TYPE = SPACE

ALL UNITS ARE -- KIP FEET (LOCAL)

MEMBER	LOAD	JT	AXIAL	SHEAR-Y	SHEAR-Z	TORSION	MOM-Y	MOM-Z
	414	3	23.53	10.35	0.00	0.00	0.00	84.29
		4	-23.03	-6.34	0.00	0.00	0.00	-9.35
	415	3	23.15	9.80	0.00	0.00	0.00	83.50
		4	-22.64	-5.78	0.00	0.00	0.00	-13.56
	3000	3	16.62	10.06	0.00	0.00	0.00	49.53
		4	-15.74	-3.01	0.00	0.00	0.00	-4.62
	3001	3	17.36	9.75	0.00	0.00	0.00	53.18
		4	-16.48	-2.71	0.00	0.00	0.00	-1.91
	3002	3	19.17	12.18	0.00	0.00	0.00	57.24
		4	-17.91	-2.11	0.00	0.00	0.00	3.77
	3003	3	20.44	11.61	0.00	0.00	0.00	63.60
		4	-19.19	-1.54	0.00	0.00	0.00	10.37
	3004	3	21.38	11.14	0.00	0.00	0.00	68.36
		4	-20.50	-4.09	0.00	0.00	0.00	10.54
	3005	3	22.09	10.69	0.00	0.00	0.00	72.11
		4	-21.59	-6.68	0.00	0.00	0.00	5.90
	3006	3	22.72	10.20	0.00	0.00	0.00	75.57
		4	-22.21	-6.18	0.00	0.00	0.00	-2.05
	3007	3	23.07	9.73	0.00	0.00	0.00	77.80
		4	-22.57	-5.71	0.00	0.00	0.00	-8.47
	3008	3	23.15	9.30	0.00	0.00	0.00	78.81
		4	-22.65	-5.28	0.00	0.00	0.00	-13.37
	3009	3	22.96	8.91	0.00	0.00	0.00	78.60
		4	-22.46	-4.89	0.00	0.00	0.00	-16.73
	4000	3	15.61	10.18	0.00	0.00	0.00	50.45
		4	-14.73	-3.14	0.00	0.00	0.00	-4.40
	4001	3	16.35	9.88	0.00	0.00	0.00	54.10
		4	-15.47	-2.84	0.00	0.00	0.00	-1.69
	4002	3	18.16	12.31	0.00	0.00	0.00	58.16
		4	-16.90	-2.24	0.00	0.00	0.00	3.99
	4003	3	19.43	11.73	0.00	0.00	0.00	64.53
		4	-18.17	-1.66	0.00	0.00	0.00	10.59
	4004	3	20.37	11.26	0.00	0.00	0.00	69.28
		4	-19.49	-4.22	0.00	0.00	0.00	10.76
	4005	3	21.08	10.82	0.00	0.00	0.00	73.03
		4	-20.58	-6.80	0.00	0.00	0.00	6.12
	4006	3	21.71	10.32	0.00	0.00	0.00	76.49
		4	-21.20	-6.31	0.00	0.00	0.00	-1.83
	4007	3	22.06	9.86	0.00	0.00	0.00	78.72
		4	-21.56	-5.84	0.00	0.00	0.00	-8.26
	4008	3	22.14	9.43	0.00	0.00	0.00	79.73
		4	-21.64	-5.41	0.00	0.00	0.00	-13.15
	4009	3	21.95	9.03	0.00	0.00	0.00	79.52
		4	-21.45	-5.02	0.00	0.00	0.00	-16.51
4	300	4	15.05	4.99	0.00	0.00	0.00	5.17
		5	-15.05	0.02	0.00	0.00	0.00	24.62

MEMBER END FORCES STRUCTURE TYPE = SPACE

ALL UNITS ARE -- KIP FEET (LOCAL)

MEMBER	LOAD	JT	AXIAL	SHEAR-Y	SHEAR-Z	TORSION	MOM-Y	MOM-Z
301		4	15.30	4.92	0.00	0.00	0.00	4.30
		5	-15.30	0.09	0.00	0.00	0.00	24.69
302		4	15.52	4.85	0.00	0.00	0.00	3.31
		5	-15.52	0.15	0.00	0.00	0.00	24.89
303		4	15.72	4.79	0.00	0.00	0.00	2.15
		5	-15.72	0.22	0.00	0.00	0.00	25.26
304		4	15.83	5.72	0.00	0.00	0.00	3.19
		5	-15.83	0.27	0.00	0.00	0.00	25.65
305		4	16.64	5.47	0.00	0.00	0.00	2.40
		5	-16.64	0.51	0.00	0.00	0.00	26.45
306		4	17.68	5.14	0.00	0.00	0.00	-0.11
		5	-17.68	0.84	0.00	0.00	0.00	27.91
307		4	18.58	4.81	0.00	0.00	0.00	-3.41
		5	-18.58	1.17	0.00	0.00	0.00	30.17
308		4	19.09	8.46	0.00	0.00	0.00	-5.95
		5	-19.09	0.45	0.00	0.00	0.00	30.81
309		4	19.65	8.13	0.00	0.00	0.00	0.49
		5	-19.65	0.78	0.00	0.00	0.00	32.08
310		4	21.01	7.53	0.00	0.00	0.00	2.40
		5	-21.01	1.38	0.00	0.00	0.00	34.69
311		4	22.06	6.93	0.00	0.00	0.00	2.61
		5	-22.06	1.97	0.00	0.00	0.00	39.01
312		4	22.84	6.36	0.00	0.00	0.00	1.12
		5	-22.84	-1.35	0.00	0.00	0.00	45.12
313		4	23.03	9.74	0.00	0.00	0.00	3.30
		5	-23.03	-0.83	0.00	0.00	0.00	40.81
314		4	23.08	9.14	0.00	0.00	0.00	9.57
		5	-23.08	-0.23	0.00	0.00	0.00	39.06
315		4	22.77	8.55	0.00	0.00	0.00	13.78
		5	-22.77	0.36	0.00	0.00	0.00	39.38
400		4	14.03	4.99	0.00	0.00	0.00	4.95
		5	-14.03	0.02	0.00	0.00	0.00	24.83
401		4	14.28	4.92	0.00	0.00	0.00	4.09
		5	-14.28	0.09	0.00	0.00	0.00	24.91
402		4	14.51	4.85	0.00	0.00	0.00	3.09
		5	-14.51	0.15	0.00	0.00	0.00	25.11
403		4	14.70	4.79	0.00	0.00	0.00	1.93
		5	-14.70	0.22	0.00	0.00	0.00	25.48
404		4	14.81	5.72	0.00	0.00	0.00	2.98
		5	-14.81	0.27	0.00	0.00	0.00	25.87
405		4	15.62	5.47	0.00	0.00	0.00	2.19
		5	-15.62	0.51	0.00	0.00	0.00	26.66
406		4	16.66	5.14	0.00	0.00	0.00	-0.32
		5	-16.66	0.84	0.00	0.00	0.00	28.13
407		4	17.56	4.81	0.00	0.00	0.00	-3.63
		5	-17.56	1.17	0.00	0.00	0.00	30.39

MEMBER END FORCES STRUCTURE TYPE = SPACE

ALL UNITS ARE -- KIP FEET (LOCAL)

MEMBER	LOAD	JT	AXIAL	SHEAR-Y	SHEAR-Z	TORSION	MOM-Y	MOM-Z
408		4	18.07	8.46	0.00	0.00	0.00	-6.17
		5	-18.07	0.45	0.00	0.00	0.00	31.03
409		4	18.63	8.13	0.00	0.00	0.00	0.27
		5	-18.63	0.78	0.00	0.00	0.00	32.30
410		4	19.99	7.53	0.00	0.00	0.00	2.18
		5	-19.99	1.38	0.00	0.00	0.00	34.90
411		4	21.04	6.93	0.00	0.00	0.00	2.39
		5	-21.04	1.97	0.00	0.00	0.00	39.22
412		4	21.83	6.36	0.00	0.00	0.00	0.90
		5	-21.83	-1.35	0.00	0.00	0.00	45.34
413		4	22.01	9.74	0.00	0.00	0.00	3.09
		5	-22.01	-0.83	0.00	0.00	0.00	41.03
414		4	22.06	9.14	0.00	0.00	0.00	9.35
		5	-22.06	-0.23	0.00	0.00	0.00	39.28
415		4	21.75	8.55	0.00	0.00	0.00	13.56
		5	-21.75	0.36	0.00	0.00	0.00	39.60
3000		4	15.24	4.94	0.00	0.00	0.00	4.62
		5	-15.24	0.07	0.00	0.00	0.00	24.60
3001		4	16.01	4.73	0.00	0.00	0.00	1.91
		5	-16.01	0.28	0.00	0.00	0.00	24.83
3002		4	17.51	4.32	0.00	0.00	0.00	-3.77
		5	-17.51	0.69	0.00	0.00	0.00	25.54
3003		4	18.85	3.91	0.00	0.00	0.00	-10.37
		5	-18.85	1.10	0.00	0.00	0.00	27.18
3004		4	19.83	6.60	0.00	0.00	0.00	-10.54
		5	-19.83	1.45	0.00	0.00	0.00	29.37
3005		4	20.60	9.30	0.00	0.00	0.00	-5.90
		5	-20.60	1.81	0.00	0.00	0.00	32.83
3006		4	21.28	8.89	0.00	0.00	0.00	2.05
		5	-21.28	2.22	0.00	0.00	0.00	38.18
3007		4	21.68	8.47	0.00	0.00	0.00	8.47
		5	-21.68	2.64	0.00	0.00	0.00	45.06
3008		4	21.82	8.05	0.00	0.00	0.00	13.37
		5	-21.82	0.01	0.00	0.00	0.00	47.24
3009		4	21.68	7.64	0.00	0.00	0.00	16.73
		5	-21.68	-2.63	0.00	0.00	0.00	44.85
4000		4	14.22	4.94	0.00	0.00	0.00	4.40
		5	-14.22	0.07	0.00	0.00	0.00	24.82
4001		4	14.99	4.73	0.00	0.00	0.00	1.69
		5	-14.99	0.28	0.00	0.00	0.00	25.05
4002		4	16.50	4.32	0.00	0.00	0.00	-3.99
		5	-16.50	0.69	0.00	0.00	0.00	25.76
4003		4	17.83	3.91	0.00	0.00	0.00	-10.59
		5	-17.83	1.10	0.00	0.00	0.00	27.40
4004		4	18.82	6.60	0.00	0.00	0.00	-10.76
		5	-18.82	1.45	0.00	0.00	0.00	29.58

MEMBER END FORCES STRUCTURE TYPE = SPACE

ALL UNITS ARE -- KIP FEET (LOCAL)

MEMBER	LOAD	JT	AXIAL	SHEAR-Y	SHEAR-Z	TORSION	MOM-Y	MOM-Z
	4005	4	19.58	9.30	0.00	0.00	0.00	-6.12
		5	-19.58	1.81	0.00	0.00	0.00	33.05
	4006	4	20.26	8.89	0.00	0.00	0.00	1.83
		5	-20.26	2.22	0.00	0.00	0.00	38.40
	4007	4	20.67	8.47	0.00	0.00	0.00	8.26
		5	-20.67	2.64	0.00	0.00	0.00	45.27
	4008	4	20.80	8.05	0.00	0.00	0.00	13.15
		5	-20.80	0.01	0.00	0.00	0.00	47.46
	4009	4	20.66	7.64	0.00	0.00	0.00	16.51
		5	-20.66	-2.63	0.00	0.00	0.00	45.07
5	300	6	15.05	5.03	0.00	0.00	0.00	5.70
		5	-15.05	-0.02	0.00	0.00	0.00	24.62
	301	6	15.30	5.10	0.00	0.00	0.00	6.42
		5	-15.30	-0.09	0.00	0.00	0.00	24.69
	302	6	15.52	5.16	0.00	0.00	0.00	7.02
		5	-15.52	-0.15	0.00	0.00	0.00	24.89
	303	6	15.72	5.23	0.00	0.00	0.00	7.44
		5	-15.72	-0.22	0.00	0.00	0.00	25.26
	304	6	15.83	5.28	0.00	0.00	0.00	7.60
		5	-15.83	-0.27	0.00	0.00	0.00	25.65
	305	6	16.64	5.52	0.00	0.00	0.00	9.73
		5	-16.64	-0.51	0.00	0.00	0.00	26.45
	306	6	17.68	5.85	0.00	0.00	0.00	12.23
		5	-17.68	-0.84	0.00	0.00	0.00	27.91
	307	6	18.58	6.18	0.00	0.00	0.00	13.94
		5	-18.58	-1.17	0.00	0.00	0.00	30.17
	308	6	19.09	6.43	0.00	0.00	0.00	14.30
		5	-19.09	-0.45	0.00	0.00	0.00	30.81
	309	6	19.65	6.76	0.00	0.00	0.00	14.11
		5	-19.65	-0.78	0.00	0.00	0.00	32.08
	310	6	21.01	7.36	0.00	0.00	0.00	15.75
		5	-21.01	-1.38	0.00	0.00	0.00	34.69
	311	6	22.06	7.96	0.00	0.00	0.00	15.67
		5	-22.06	-1.97	0.00	0.00	0.00	39.01
	312	6	22.84	7.56	0.00	0.00	0.00	15.38
		5	-22.84	1.35	0.00	0.00	0.00	45.12
	313	6	23.03	8.07	0.00	0.00	0.00	14.18
		5	-23.03	0.83	0.00	0.00	0.00	40.81
	314	6	23.08	8.67	0.00	0.00	0.00	11.42
		5	-23.08	0.23	0.00	0.00	0.00	39.06
	315	6	22.77	9.27	0.00	0.00	0.00	6.56
		5	-22.77	-0.36	0.00	0.00	0.00	39.38
	400	6	14.03	5.03	0.00	0.00	0.00	5.49
		5	-14.03	-0.02	0.00	0.00	0.00	24.83

MEMBER END FORCES STRUCTURE TYPE = SPACE

ALL UNITS ARE -- KIP FEET (LOCAL)

MEMBER	LOAD	JT	AXIAL	SHEAR-Y	SHEAR-Z	TORSION	MOM-Y	MOM-Z
401		6	14.28	5.10	0.00	0.00	0.00	6.20
		5	-14.28	-0.09	0.00	0.00	0.00	24.91
402		6	14.51	5.16	0.00	0.00	0.00	6.80
		5	-14.51	-0.15	0.00	0.00	0.00	25.11
403		6	14.70	5.23	0.00	0.00	0.00	7.22
		5	-14.70	-0.22	0.00	0.00	0.00	25.48
404		6	14.81	5.28	0.00	0.00	0.00	7.38
		5	-14.81	-0.27	0.00	0.00	0.00	25.87
405		6	15.62	5.52	0.00	0.00	0.00	9.51
		5	-15.62	-0.51	0.00	0.00	0.00	26.66
406		6	16.66	5.85	0.00	0.00	0.00	12.02
		5	-16.66	-0.84	0.00	0.00	0.00	28.13
407		6	17.56	6.18	0.00	0.00	0.00	13.73
		5	-17.56	-1.17	0.00	0.00	0.00	30.39
408		6	18.07	6.43	0.00	0.00	0.00	14.09
		5	-18.07	-0.45	0.00	0.00	0.00	31.03
409		6	18.63	6.76	0.00	0.00	0.00	13.89
		5	-18.63	-0.78	0.00	0.00	0.00	32.30
410		6	19.99	7.36	0.00	0.00	0.00	15.53
		5	-19.99	-1.38	0.00	0.00	0.00	34.90
411		6	21.04	7.96	0.00	0.00	0.00	15.45
		5	-21.04	-1.97	0.00	0.00	0.00	39.22
412		6	21.83	7.56	0.00	0.00	0.00	15.16
		5	-21.83	1.35	0.00	0.00	0.00	45.34
413		6	22.01	8.07	0.00	0.00	0.00	13.96
		5	-22.01	0.83	0.00	0.00	0.00	41.03
414		6	22.06	8.67	0.00	0.00	0.00	11.20
		5	-22.06	0.23	0.00	0.00	0.00	39.28
415		6	21.75	9.27	0.00	0.00	0.00	6.34
		5	-21.75	-0.36	0.00	0.00	0.00	39.60
3000		6	15.24	5.08	0.00	0.00	0.00	6.29
		5	-15.24	-0.07	0.00	0.00	0.00	24.60
3001		6	16.01	5.28	0.00	0.00	0.00	8.54
		5	-16.01	-0.28	0.00	0.00	0.00	24.83
3002		6	17.51	5.70	0.00	0.00	0.00	12.79
		5	-17.51	-0.69	0.00	0.00	0.00	25.54
3003		6	18.85	6.11	0.00	0.00	0.00	16.11
		5	-18.85	-1.10	0.00	0.00	0.00	27.18
3004		6	19.83	6.46	0.00	0.00	0.00	18.13
		5	-19.83	-1.45	0.00	0.00	0.00	29.37
3005		6	20.60	6.81	0.00	0.00	0.00	18.89
		5	-20.60	-1.81	0.00	0.00	0.00	32.83
3006		6	21.28	7.23	0.00	0.00	0.00	18.54
		5	-21.28	-2.22	0.00	0.00	0.00	38.18
3007		6	21.68	7.65	0.00	0.00	0.00	16.66
		5	-21.68	-2.64	0.00	0.00	0.00	45.06

MEMBER END FORCES STRUCTURE TYPE = SPACE

ALL UNITS ARE -- KIP FEET (LOCAL)

MEMBER	LOAD	JT	AXIAL	SHEAR-Y	SHEAR-Z	TORSION	MOM-Y	MOM-Z
	3008	6	21.82	8.06	0.00	0.00	0.00	13.26
		5	-21.82	-0.01	0.00	0.00	0.00	47.24
	3009	6	21.68	8.48	0.00	0.00	0.00	8.32
		5	-21.68	2.63	0.00	0.00	0.00	44.85
	4000	6	14.22	5.08	0.00	0.00	0.00	6.07
		5	-14.22	-0.07	0.00	0.00	0.00	24.82
	4001	6	14.99	5.28	0.00	0.00	0.00	8.32
		5	-14.99	-0.28	0.00	0.00	0.00	25.05
	4002	6	16.50	5.70	0.00	0.00	0.00	12.57
		5	-16.50	-0.69	0.00	0.00	0.00	25.76
	4003	6	17.83	6.11	0.00	0.00	0.00	15.90
		5	-17.83	-1.10	0.00	0.00	0.00	27.40
	4004	6	18.82	6.46	0.00	0.00	0.00	17.92
		5	-18.82	-1.45	0.00	0.00	0.00	29.58
	4005	6	19.58	6.81	0.00	0.00	0.00	18.67
		5	-19.58	-1.81	0.00	0.00	0.00	33.05
	4006	6	20.26	7.23	0.00	0.00	0.00	18.32
		5	-20.26	-2.22	0.00	0.00	0.00	38.40
	4007	6	20.67	7.65	0.00	0.00	0.00	16.45
		5	-20.67	-2.64	0.00	0.00	0.00	45.27
	4008	6	20.80	8.06	0.00	0.00	0.00	13.04
		5	-20.80	-0.01	0.00	0.00	0.00	47.46
	4009	6	20.66	8.48	0.00	0.00	0.00	8.10
		5	-20.66	2.63	0.00	0.00	0.00	45.07
6	300	7	16.06	7.14	0.00	0.00	0.00	51.64
		6	-15.56	-3.13	0.00	0.00	0.00	-5.70
	301	7	16.32	7.18	0.00	0.00	0.00	52.68
		6	-15.81	-3.16	0.00	0.00	0.00	-6.42
	302	7	16.55	7.22	0.00	0.00	0.00	53.61
		6	-16.04	-3.20	0.00	0.00	0.00	-7.02
	303	7	16.75	7.26	0.00	0.00	0.00	54.41
		6	-16.24	-3.24	0.00	0.00	0.00	-7.44
	304	7	16.86	7.29	0.00	0.00	0.00	54.86
		6	-16.36	-3.27	0.00	0.00	0.00	-7.60
	305	7	17.70	7.43	0.00	0.00	0.00	58.26
		6	-17.20	-3.41	0.00	0.00	0.00	-9.73
	306	7	18.77	7.63	0.00	0.00	0.00	62.56
		6	-18.27	-3.61	0.00	0.00	0.00	-12.23
	307	7	19.71	7.85	0.00	0.00	0.00	66.24
		6	-19.20	-3.83	0.00	0.00	0.00	-13.94
	308	7	20.24	8.03	0.00	0.00	0.00	68.26
		6	-19.74	-4.01	0.00	0.00	0.00	-14.30
	309	7	20.84	8.29	0.00	0.00	0.00	70.42
		6	-20.33	-4.27	0.00	0.00	0.00	-14.11

MEMBER END FORCES STRUCTURE TYPE = SPACE

ALL UNITS ARE -- KIP FEET (LOCAL)

MEMBER	LOAD	JT	AXIAL	SHEAR-Y	SHEAR-Z	TORSION	MOM-Y	MOM-Z
	310	7	22.26	8.72	0.00	0.00	0.00	75.89
		6	-21.76	-4.70	0.00	0.00	0.00	-15.75
	311	7	23.38	9.18	0.00	0.00	0.00	79.99
		6	-22.88	-5.16	0.00	0.00	0.00	-15.67
	312	7	24.23	9.65	0.00	0.00	0.00	82.91
		6	-23.61	-4.67	0.00	0.00	0.00	-15.38
	313	7	24.48	10.14	0.00	0.00	0.00	83.22
		6	-23.85	-5.16	0.00	0.00	0.00	-14.18
	314	7	24.60	10.73	0.00	0.00	0.00	82.86
		6	-23.98	-5.74	0.00	0.00	0.00	-11.42
	315	7	24.25	10.39	0.00	0.00	0.00	81.85
		6	-23.74	-6.38	0.00	0.00	0.00	-6.56
	400	7	15.05	7.27	0.00	0.00	0.00	52.57
		6	-14.55	-3.25	0.00	0.00	0.00	-5.49
	401	7	15.31	7.30	0.00	0.00	0.00	53.60
		6	-14.80	-3.29	0.00	0.00	0.00	-6.20
	402	7	15.54	7.34	0.00	0.00	0.00	54.54
		6	-15.03	-3.32	0.00	0.00	0.00	-6.80
	403	7	15.74	7.38	0.00	0.00	0.00	55.34
		6	-15.23	-3.37	0.00	0.00	0.00	-7.22
	404	7	15.85	7.42	0.00	0.00	0.00	55.78
		6	-15.35	-3.40	0.00	0.00	0.00	-7.38
	405	7	16.69	7.56	0.00	0.00	0.00	59.18
		6	-16.19	-3.54	0.00	0.00	0.00	-9.51
	406	7	17.76	7.76	0.00	0.00	0.00	63.49
		6	-17.26	-3.74	0.00	0.00	0.00	-12.02
	407	7	18.69	7.97	0.00	0.00	0.00	67.16
		6	-18.19	-3.95	0.00	0.00	0.00	-13.73
	408	7	19.23	8.16	0.00	0.00	0.00	69.18
		6	-18.73	-4.14	0.00	0.00	0.00	-14.09
	409	7	19.83	8.42	0.00	0.00	0.00	71.34
		6	-19.32	-4.40	0.00	0.00	0.00	-13.89
	410	7	21.25	8.84	0.00	0.00	0.00	76.82
		6	-20.75	-4.82	0.00	0.00	0.00	-15.53
	411	7	22.37	9.30	0.00	0.00	0.00	80.91
		6	-21.87	-5.29	0.00	0.00	0.00	-15.45
	412	7	23.22	9.78	0.00	0.00	0.00	83.84
		6	-22.59	-4.79	0.00	0.00	0.00	-15.16
	413	7	23.46	10.27	0.00	0.00	0.00	84.15
		6	-22.84	-5.28	0.00	0.00	0.00	-13.96
	414	7	23.59	10.86	0.00	0.00	0.00	83.79
		6	-22.97	-5.87	0.00	0.00	0.00	-11.20
	415	7	23.24	10.52	0.00	0.00	0.00	82.77
		6	-22.73	-6.50	0.00	0.00	0.00	-6.34
	3000	7	16.26	7.17	0.00	0.00	0.00	52.44
		6	-15.75	-3.15	0.00	0.00	0.00	-6.29

MEMBER END FORCES STRUCTURE TYPE = SPACE

ALL UNITS ARE -- KIP FEET (LOCAL)

MEMBER	LOAD	JT	AXIAL	SHEAR-Y	SHEAR-Z	TORSION	MOM-Y	MOM-Z
	3001	7	17.05	7.28	0.00	0.00	0.00	55.68
		6	-16.55	-3.26	0.00	0.00	0.00	-8.54
	3002	7	18.59	7.50	0.00	0.00	0.00	61.96
		6	-18.09	-3.48	0.00	0.00	0.00	-12.79
	3003	7	19.96	7.75	0.00	0.00	0.00	67.49
		6	-19.46	-3.73	0.00	0.00	0.00	-16.11
	3004	7	20.98	7.97	0.00	0.00	0.00	71.55
		6	-20.48	-3.95	0.00	0.00	0.00	-18.13
	3005	7	21.78	8.23	0.00	0.00	0.00	74.60
		6	-21.28	-4.21	0.00	0.00	0.00	-18.89
	3006	7	22.51	8.55	0.00	0.00	0.00	77.22
		6	-22.01	-4.54	0.00	0.00	0.00	-18.54
	3007	7	22.97	8.92	0.00	0.00	0.00	78.62
		6	-22.47	-4.90	0.00	0.00	0.00	-16.66
	3008	7	23.15	9.31	0.00	0.00	0.00	78.80
		6	-22.65	-5.30	0.00	0.00	0.00	-13.26
	3009	7	23.06	9.74	0.00	0.00	0.00	77.76
		6	-22.56	-5.73	0.00	0.00	0.00	-8.32
	4000	7	15.25	7.29	0.00	0.00	0.00	53.37
		6	-14.74	-3.27	0.00	0.00	0.00	-6.07
	4001	7	16.04	7.40	0.00	0.00	0.00	56.60
		6	-15.53	-3.38	0.00	0.00	0.00	-8.32
	4002	7	17.58	7.63	0.00	0.00	0.00	62.88
		6	-17.07	-3.61	0.00	0.00	0.00	-12.57
	4003	7	18.95	7.87	0.00	0.00	0.00	68.42
		6	-18.45	-3.85	0.00	0.00	0.00	-15.90
	4004	7	19.97	8.10	0.00	0.00	0.00	72.47
		6	-19.47	-4.08	0.00	0.00	0.00	-17.92
	4005	7	20.77	8.35	0.00	0.00	0.00	75.52
		6	-20.27	-4.33	0.00	0.00	0.00	-18.67
	4006	7	21.50	8.68	0.00	0.00	0.00	78.15
		6	-21.00	-4.66	0.00	0.00	0.00	-18.32
	4007	7	21.96	9.04	0.00	0.00	0.00	79.55
		6	-21.45	-5.03	0.00	0.00	0.00	-16.45
	4008	7	22.14	9.44	0.00	0.00	0.00	79.72
		6	-21.64	-5.42	0.00	0.00	0.00	-13.04
	4009	7	22.05	9.87	0.00	0.00	0.00	78.68
		6	-21.55	-5.85	0.00	0.00	0.00	-8.10

********** END OF LATEST ANALYSIS RESULT **********

```
471. ***
472. LOAD LIST 100 TO 115 200 TO 215 1000 TO 1009 2000 TO 2009
473. PRINT FORCE ENVELOPE NSECTION 4 LIST 3 6
```

MEMBER FORCE ENVELOPE

ALL UNITS ARE KIP FEET

MEMB	DISTANCE		FY	LD	MZ	LD	FZ	LD	MY	LD
3	0.00	MAX	19.77	210	127.63	214	0.00	2009	0.00	2009
		MIN	10.77	104	66.93	1000	0.00	2009	0.00	2009
	0.75	MAX	19.28	210	116.26	214	0.00	2009	0.00	2009
		MIN	9.06	1000	59.93	1000	0.00	2009	0.00	2009
	1.50	MAX	18.80	210	105.33	215	0.00	2009	0.00	2009
		MIN	8.58	1000	52.50	1001	0.00	2009	0.00	2009
	2.26	MAX	17.06	211	95.42	215	0.00	2009	0.00	2009
		MIN	8.10	1000	41.51	1002	0.00	2009	0.00	2009
	3.01	MAX	16.59	211	85.86	215	0.00	2009	0.00	2009
		MIN	7.11	1001	32.79	1002	0.00	2009	0.00	2009
	3.76	MAX	16.13	211	76.66	215	0.00	2009	0.00	2009
		MIN	6.64	1001	24.42	1002	0.00	2009	0.00	2009
	4.51	MAX	15.67	211	67.80	215	0.00	2009	0.00	2009
		MIN	6.18	1001	16.39	1002	0.00	2009	0.00	2009
	5.27	MAX	14.04	212	59.41	2009	0.00	2009	0.00	2009
		MIN	5.73	1001	8.71	1002	0.00	2009	0.00	2009
	6.02	MAX	13.60	212	52.24	2009	0.00	2009	0.00	2009
		MIN	4.24	1002	1.47	1002	0.00	2009	0.00	2009
	6.77	MAX	13.15	212	45.41	2009	0.00	2009	0.00	2009
		MIN	3.79	1002	-3.57	1003	0.00	2009	0.00	2009
	7.52	MAX	12.71	212	38.96	1009	0.00	2009	0.00	2009
		MIN	3.35	1002	-9.53	2003	0.00	2009	0.00	2009
	8.28	MAX	11.34	213	32.95	1009	0.00	2009	0.00	2009
		MIN	2.92	1002	-16.02	2004	0.00	2009	0.00	2009
	9.03	MAX	10.91	213	27.26	1009	0.00	2009	0.00	2009
		MIN	1.48	1003	-20.82	2004	0.00	2009	0.00	2009

MAX/MIN FORCE VALUES FOR MEMB 3, AMONGST ALL SECT LOCATIONS

	FY/ FZ	DIST DIST	LD LD	MZ/ MY	DIST DIST	LD LD	FX	DIST	LD
MAX.	19.77	0.00	210	127.63	0.00	214			
	0.00	0.00	100	0.00	0.00	100	37.07 C	0.00	113
MIN.	1.48	9.03	1003	-20.82	9.03	2004			
	0.00	9.03	2009	0.00	9.03	2009	19.89 C	9.03	200

6	0.00	MAX	16.22	214	127.37	213	0.00	2009	0.00	2009
		MIN	9.74	100	70.63	100	0.00	2009	0.00	2009
	0.75	MAX	15.74	214	116.22	212	0.00	2009	0.00	2009
		MIN	9.26	100	63.48	100	0.00	2009	0.00	2009

1.50	MAX	15.26	214	105.98	212	0.00	2009	0.00	2009
	MIN	8.78	100	56.70	100	0.00	2009	0.00	2009
2.26	MAX	14.19	215	96.10	212	0.00	2009	0.00	2009
	MIN	8.30	100	50.27	100	0.00	2009	0.00	2009
3.01	MAX	13.72	215	86.57	212	0.00	2009	0.00	2009
	MIN	7.83	100	44.20	100	0.00	2009	0.00	2009
3.76	MAX	13.26	215	77.39	212	0.00	2009	0.00	2009
	MIN	7.37	100	38.48	100	0.00	2009	0.00	2009
4.51	MAX	12.80	215	68.56	212	0.00	2009	0.00	2009
	MIN	6.91	100	33.11	100	0.00	2009	0.00	2009
5.27	MAX	12.35	215	60.25	2006	0.00	2009	0.00	2009
	MIN	6.46	100	28.08	100	0.00	2009	0.00	2009
6.02	MAX	11.90	215	53.55	2006	0.00	2009	0.00	2009
	MIN	6.01	100	23.39	100	0.00	2009	0.00	2009
6.77	MAX	11.45	215	47.18	2006	0.00	2009	0.00	2009
	MIN	5.56	100	19.04	100	0.00	2009	0.00	2009
7.52	MAX	11.01	215	41.19	1006	0.00	2009	0.00	2009
	MIN	5.12	100	14.97	200	0.00	2009	0.00	2009
8.28	MAX	10.58	215	35.82	1005	0.00	2009	0.00	2009
	MIN	4.69	100	11.13	200	0.00	2009	0.00	2009
9.03	MAX	10.15	215	31.03	1005	0.00	2009	0.00	2009
	MIN	4.26	100	7.61	200	0.00	2009	0.00	2009

MAX/MIN FORCE VALUES FOR MEMB 6, AMONGST ALL SECT LOCATIONS

	FY/ FZ	DIST DIST	LD LD	MZ/ MY	DIST DIST	LD LD	FX	DIST	LD
MAX.	16.22	0.00	214	127.37	0.00	213			
	0.00	0.00	100	0.00	0.00	100	37.14 C	0.00	114
MIN.	4.26	9.03	100	7.61	9.03	200			
	0.00	9.03	2009	0.00	9.03	2009	19.90 C	9.03	200

********** END OF FORCE ENVELOPE FROM INTERNAL STORAGE **********

474. LOAD LIST 100 TO 115 200 TO 215 1000 TO 1009 2000 TO 2009
475. PRINT FORCE ENVELOPE NSECTION 4 LIST 4 5

MEMBER FORCE ENVELOPE

ALL UNITS ARE KIP FEET

MEMB	DISTANCE		FY	LD	MZ	LD	FZ	LD	MY	LD
4	0.00	MAX	15.14	213	27.26	1009	0.00	2009	0.00	2009
		MIN	4.93	2003	-20.82	2004	0.00	2009	0.00	2009
	1.00	MAX	14.57	213	16.09	1009	0.00	2009	0.00	2009
		MIN	4.35	2003	-30.18	2004	0.00	2009	0.00	2009
	2.00	MAX	12.95	214	5.49	1009	0.00	2009	0.00	2009
		MIN	3.78	2003	-38.97	2004	0.00	2009	0.00	2009
	3.00	MAX	12.38	214	-4.54	1009	0.00	2009	0.00	2009
		MIN	2.60	2004	-42.78	2005	0.00	2009	0.00	2009
	4.00	MAX	11.81	214	-13.99	1009	0.00	2009	0.00	2009
		MIN	2.03	2004	-49.82	2005	0.00	2009	0.00	2009
	5.00	MAX	10.19	215	-19.92	100	0.00	2009	0.00	2009
		MIN	1.46	2004	-56.28	2005	0.00	2009	0.00	2009
	6.00	MAX	9.62	215	-23.60	100	0.00	2009	0.00	2009
		MIN	0.27	2005	-59.89	2006	0.00	2009	0.00	2009
	7.00	MAX	9.05	215	-26.70	100	0.00	2009	0.00	2009
		MIN	-0.30	2005	-64.49	2006	0.00	2009	0.00	2009
	8.00	MAX	7.61	2008	-29.24	100	0.00	2009	0.00	2009
		MIN	-0.87	2005	-68.51	2006	0.00	2009	0.00	2009
	9.00	MAX	7.04	2008	-31.20	100	0.00	2009	0.00	2009
		MIN	-2.17	2006	-70.16	2007	0.00	2009	0.00	2009
	10.00	MAX	6.47	2008	-32.59	100	0.00	2009	0.00	2009
		MIN	-2.75	2006	-72.31	2007	0.00	2009	0.00	2009
	11.00	MAX	5.17	2009	-33.41	100	0.00	2009	0.00	2009
		MIN	-3.32	2006	-73.89	2007	0.00	2009	0.00	2009
	12.00	MAX	4.60	2009	-33.62	1000	0.00	2009	0.00	2009
		MIN	-4.62	2007	-73.59	2008	0.00	2009	0.00	2009

MAX/MIN FORCE VALUES FOR MEMB 4, AMONGST ALL SECT LOCATIONS

	FY/ FZ	DIST DIST	LD LD	MZ/ MY	DIST DIST	LD LD	FX	DIST	LD
MAX.	15.14	0.00	113	27.26	0.00	1009			
	0.00	0.00	100	0.00	0.00	100	34.87 C	0.00	114
MIN.	-4.62	12.00	2007	-73.89	11.00	2007			
	0.00	12.00	2009	0.00	12.00	2009	19.19 C	12.00	200

5	0.00	MAX	14.32	215	31.03	1005	0.00	2009	0.00	2009
		MIN	6.90	200	7.61	200	0.00	2009	0.00	2009
	1.00	MAX	13.74	215	21.30	1005	0.00	2009	0.00	2009
		MIN	6.32	200	-4.92	215	0.00	2009	0.00	2009

2.00	MAX	13.17	215	12.14	1005	0.00	2009	0.00	2009
	MIN	5.75	200	-18.38	215	0.00	2009	0.00	2009
3.00	MAX	11.56	214	4.08	1004	0.00	2009	0.00	2009
	MIN	5.18	200	-30.99	215	0.00	2009	0.00	2009
4.00	MAX	10.99	214	-3.32	1004	0.00	2009	0.00	2009
	MIN	4.61	200	-36.48	215	0.00	2009	0.00	2009
5.00	MAX	10.41	214	-10.15	1004	0.00	2009	0.00	2009
	MIN	4.04	200	-45.33	2009	0.00	2009	0.00	2009
6.00	MAX	9.50	2009	-16.27	1003	0.00	2009	0.00	2009
	MIN	3.02	214	-55.12	2009	0.00	2009	0.00	2009
7.00	MAX	8.22	213	-21.35	1003	0.00	2009	0.00	2009
	MIN	2.45	214	-64.13	2009	0.00	2009	0.00	2009
8.00	MAX	7.65	213	-25.85	1003	0.00	2009	0.00	2009
	MIN	1.87	214	-67.44	2009	0.00	2009	0.00	2009
9.00	MAX	7.06	2008	-29.08	1002	0.00	2009	0.00	2009
	MIN	0.26	213	-70.18	2009	0.00	2009	0.00	2009
10.00	MAX	5.76	2007	-31.72	1002	0.00	2009	0.00	2009
	MIN	-0.32	213	-72.43	2008	0.00	2009	0.00	2009
11.00	MAX	5.19	2007	-33.22	1000	0.00	2009	0.00	2009
	MIN	-4.03	2009	-73.73	2009	0.00	2009	0.00	2009
12.00	MAX	4.62	2007	-33.62	1000	0.00	2009	0.00	2009
	MIN	-4.60	2009	-73.59	2008	0.00	2009	0.00	2009

MAX/MIN FORCE VALUES FOR MEMB 5, AMONGST ALL SECT LOCATIONS

	FY/ FZ	DIST DIST	LD LD	MZ/ MY	DIST DIST	LD LD	FX	DIST	LD
MAX.	14.32	0.00	115	31.03	0.00	1005			
	0.00	0.00	100	0.00	0.00	100	34.87 C	0.00	114
MIN.	-4.60	12.00	2009	-73.73	11.00	2009			
	0.00	12.00	2009	0.00	12.00	2009	19.19 C	12.00	200

********** END OF FORCE ENVELOPE FROM INTERNAL STORAGE **********

476. LOAD LIST 100 TO 115 200 TO 215 1000 TO 1009 2000 TO 2009
477. PRINT FORCE ENVELOPE NSECTION 4 LIST 1 2

MEMBER FORCE ENVELOPE

ALL UNITS ARE KIP FEET

MEMB	DISTANCE		FY	LD	MZ	LD	FZ	LD	MY	LD
1	0.00	MAX	-13.40	1000	0.00	2009	0.00	2009	0.00	2009
		MIN	-29.21	214	0.00	2009	0.00	2009	0.00	2009
	0.38	MAX	-13.86	1000	11.21	214	0.00	2009	0.00	2009
		MIN	-29.22	214	5.23	1000	0.00	2009	0.00	2009
	0.77	MAX	-14.30	1000	22.43	214	0.00	2009	0.00	2009
		MIN	-29.24	214	10.63	1000	0.00	2009	0.00	2009
	1.15	MAX	-14.73	1000	33.65	214	0.00	2009	0.00	2009
		MIN	-29.26	214	16.20	1000	0.00	2009	0.00	2009
	1.53	MAX	-15.14	1000	44.88	214	0.00	2009	0.00	2009
		MIN	-29.28	214	21.94	1000	0.00	2009	0.00	2009
	1.92	MAX	-15.55	1000	56.12	214	0.00	2009	0.00	2009
		MIN	-29.31	214	27.82	1000	0.00	2009	0.00	2009
	2.30	MAX	-15.94	1000	67.37	214	0.00	2009	0.00	2009
		MIN	-29.34	214	33.86	1000	0.00	2009	0.00	2009
	2.69	MAX	-16.16	2000	78.63	214	0.00	2009	0.00	2009
		MIN	-29.52	114	40.05	1000	0.00	2009	0.00	2009
	3.07	MAX	-16.20	2000	89.91	214	0.00	2009	0.00	2009
		MIN	-29.89	114	46.38	1000	0.00	2009	0.00	2009
	3.45	MAX	-16.24	2000	101.20	214	0.00	2009	0.00	2009
		MIN	-30.24	114	52.85	1000	0.00	2009	0.00	2009
	3.84	MAX	-16.29	2000	112.51	214	0.00	2009	0.00	2009
		MIN	-30.57	114	59.45	1000	0.00	2009	0.00	2009
	4.22	MAX	-16.34	2000	123.84	214	0.00	2009	0.00	2009
		MIN	-30.90	114	66.17	1000	0.00	2009	0.00	2009
	4.60	MAX	-16.39	2000	135.19	214	0.00	2009	0.00	2009
		MIN	-31.21	114	73.02	1000	0.00	2009	0.00	2009

MAX/MIN FORCE VALUES FOR MEMB 1, AMONGST ALL SECT LOCATIONS

	FY/ FZ	DIST DIST	LD LD	MZ/ MY	DIST DIST	LD LD	FX	DIST	LD
MAX.	-13.40	0.00	1000	135.19	4.60	214			
	0.00	0.00	100	0.00	0.00	100	29.70 C	0.00	210
MIN.	-31.21	4.60	114	0.00	0.00	2009			
	0.00	4.60	2009	0.00	4.60	2009	16.79 C	4.60	204

2	0.00	MAX	-13.92	100	0.00	2009	0.00	2009	0.00	2009
		MIN	-29.14	213	0.00	2009	0.00	2009	0.00	2009
	0.38	MAX	-14.38	100	11.18	213	0.00	2009	0.00	2009
		MIN	-29.15	213	5.43	100	0.00	2009	0.00	2009

0.77	MAX	-14.82	100	22.37	213	0.00	2009	0.00	2009
	MIN	-29.17	213	11.03	100	0.00	2009	0.00	2009
1.15	MAX	-15.25	100	33.57	213	0.00	2009	0.00	2009
	MIN	-29.19	213	16.80	100	0.00	2009	0.00	2009
1.53	MAX	-15.66	100	44.78	213	0.00	2009	0.00	2009
	MIN	-29.21	213	22.73	100	0.00	2009	0.00	2009
1.92	MAX	-16.06	100	55.99	213	0.00	2009	0.00	2009
	MIN	-29.24	213	28.82	100	0.00	2009	0.00	2009
2.30	MAX	-16.45	100	67.22	213	0.00	2009	0.00	2009
	MIN	-29.27	213	35.05	100	0.00	2009	0.00	2009
2.69	MAX	-16.68	200	78.45	213	0.00	2009	0.00	2009
	MIN	-29.46	113	41.44	100	0.00	2009	0.00	2009
3.07	MAX	-16.72	200	89.71	213	0.00	2009	0.00	2009
	MIN	-29.82	113	47.97	100	0.00	2009	0.00	2009
3.45	MAX	-16.76	200	100.97	213	0.00	2009	0.00	2009
	MIN	-30.17	113	54.63	100	0.00	2009	0.00	2009
3.84	MAX	-16.81	200	112.26	213	0.00	2009	0.00	2009
	MIN	-30.51	113	61.43	100	0.00	2009	0.00	2009
4.22	MAX	-16.86	200	123.56	213	0.00	2009	0.00	2009
	MIN	-30.83	113	68.36	100	0.00	2009	0.00	2009
4.60	MAX	-16.91	200	134.88	213	0.00	2009	0.00	2009
	MIN	-31.14	113	75.40	100	0.00	2009	0.00	2009

MAX/MIN FORCE VALUES FOR MEMB 2, AMONGST ALL SECT LOCATIONS

	FY/ FZ	DIST DIST	LD LD	MZ/ MY	DIST DIST	LD LD	FX	DIST	LD
MAX.	-13.92	0.00	100	134.88	4.60	213			
	0.00	0.00	100	0.00	0.00	100	27.21 C	0.00	214
MIN.	-31.14	4.60	113	0.00	0.00	2009			
	0.00	4.60	2009	0.00	4.60	2009	15.38 C	4.60	200

********** END OF FORCE ENVELOPE FROM INTERNAL STORAGE **********

478. LOAD LIST 300 TO 315 400 TO 415 3000 TO 3009 4000 TO 4009
479. PRINT FORCE ENVELOPE NSECTION 4 LIST 3 6

MEMBER FORCE ENVELOPE

ALL UNITS ARE KIP FEET

MEMB	DISTANCE		FY	LD	MZ	LD	FZ	LD	MY	LD
3	0.00	MAX	12.88	410	84.29	414	0.00	4009	0.00	4009
		MIN	7.73	304	49.53	3000	0.00	4009	0.00	4009
	0.75	MAX	12.53	410	76.63	414	0.00	4009	0.00	4009
		MIN	6.67	3000	44.37	3000	0.00	4009	0.00	4009
	1.50	MAX	12.17	410	69.28	415	0.00	4009	0.00	4009
		MIN	6.32	3000	39.03	3001	0.00	4009	0.00	4009
	2.26	MAX	11.10	411	62.57	415	0.00	4009	0.00	4009
		MIN	5.97	3000	31.71	3002	0.00	4009	0.00	4009
	3.01	MAX	10.76	411	56.12	415	0.00	4009	0.00	4009
		MIN	5.33	3001	25.75	3002	0.00	4009	0.00	4009
	3.76	MAX	10.42	411	49.93	415	0.00	4009	0.00	4009
		MIN	4.99	3001	20.04	3002	0.00	4009	0.00	4009
	4.51	MAX	10.08	411	43.99	415	0.00	4009	0.00	4009
		MIN	4.65	3001	14.59	3002	0.00	4009	0.00	4009
	5.27	MAX	9.08	412	38.38	4009	0.00	4009	0.00	4009
		MIN	4.32	3001	9.39	3002	0.00	4009	0.00	4009
	6.02	MAX	8.75	412	33.52	4009	0.00	4009	0.00	4009
		MIN	3.39	3002	4.49	3002	0.00	4009	0.00	4009
	6.77	MAX	8.42	412	28.91	4009	0.00	4009	0.00	4009
		MIN	3.07	3002	0.91	3003	0.00	4009	0.00	4009
	7.52	MAX	8.10	412	24.56	3009	0.00	4009	0.00	4009
		MIN	2.74	3002	-3.15	4003	0.00	4009	0.00	4009
	8.28	MAX	7.25	413	20.53	3009	0.00	4009	0.00	4009
		MIN	2.43	3002	-7.46	4004	0.00	4009	0.00	4009
	9.03	MAX	6.94	413	16.73	3009	0.00	4009	0.00	4009
		MIN	1.54	3003	-10.76	4004	0.00	4009	0.00	4009

MAX/MIN FORCE VALUES FOR MEMB 3, AMONGST ALL SECT LOCATIONS

	FY/ FZ	DIST DIST	LD LD	MZ/ MY	DIST DIST	LD LD	FX	DIST	LD
MAX.	12.88	0.00	410	84.29	0.00	414			
	0.00	0.00	300	0.00	0.00	300	24.56 C	0.00	313
MIN.	1.54	9.03	3003	-10.76	9.03	4004			
	0.00	9.03	4009	0.00	9.03	4009	14.54 C	9.03	400

6	0.00	MAX	10.86	414	84.15	413	0.00	4009	0.00	4009
		MIN	7.14	300	51.64	300	0.00	4009	0.00	4009
	0.75	MAX	10.50	414	76.61	412	0.00	4009	0.00	4009
		MIN	6.79	300	46.40	300	0.00	4009	0.00	4009

1.50	MAX	10.15	414	69.65	412	0.00	4009	0.00	4009
	MIN	6.43	300	41.43	300	0.00	4009	0.00	4009
2.26	MAX	9.46	415	62.96	412	0.00	4009	0.00	4009
	MIN	6.09	300	36.72	300	0.00	4009	0.00	4009
3.01	MAX	9.12	415	56.52	412	0.00	4009	0.00	4009
	MIN	5.74	300	32.27	300	0.00	4009	0.00	4009
3.76	MAX	8.78	415	50.35	412	0.00	4009	0.00	4009
	MIN	5.40	300	28.08	300	0.00	4009	0.00	4009
4.51	MAX	8.44	415	44.43	412	0.00	4009	0.00	4009
	MIN	5.06	300	24.14	300	0.00	4009	0.00	4009
5.27	MAX	8.11	415	38.86	4006	0.00	4009	0.00	4009
	MIN	4.73	300	20.45	300	0.00	4009	0.00	4009
6.02	MAX	7.78	415	34.26	4006	0.00	4009	0.00	4009
	MIN	4.40	300	17.02	300	0.00	4009	0.00	4009
6.77	MAX	7.45	415	29.92	4006	0.00	4009	0.00	4009
	MIN	4.08	300	13.83	300	0.00	4009	0.00	4009
7.52	MAX	7.13	415	25.84	3006	0.00	4009	0.00	4009
	MIN	3.76	300	10.85	400	0.00	4009	0.00	4009
8.28	MAX	6.82	415	22.17	3005	0.00	4009	0.00	4009
	MIN	3.44	300	8.05	400	0.00	4009	0.00	4009
9.03	MAX	6.50	415	18.89	3005	0.00	4009	0.00	4009
	MIN	3.13	300	5.49	400	0.00	4009	0.00	4009

MAX/MIN FORCE VALUES FOR MEMB 6, AMONGST ALL SECT LOCATIONS

	FY/ FZ	DIST DIST	LD LD	MZ/ MY	DIST DIST	LD LD	FX	DIST	LD
MAX.	10.86	0.00	414	84.15	0.00	413			
	0.00	0.00	300	0.00	0.00	300	24.60 C	0.00	314
MIN.	3.13	9.03	300	5.49	9.03	400			
	0.00	9.03	4009	0.00	9.03	4009	14.55 C	9.03	400

********** END OF FORCE ENVELOPE FROM INTERNAL STORAGE **********

```
480. LOAD LIST 300 TO 315 400 TO 415 3000 TO 3009 4000 TO 4009
481. PRINT FORCE ENVELOPE NSECTION 4 LIST 4 5
```

MEMBER FORCE ENVELOPE

ALL UNITS ARE KIP FEET

MEMB	DISTANCE		FY	LD	MZ	LD	FZ	LD	MY	LD
4	0.00	MAX	9.74	413	16.73	3009	0.00	4009	0.00	4009
		MIN	3.91	4003	-10.76	4004	0.00	4009	0.00	4009
	1.00	MAX	9.33	413	9.30	3009	0.00	4009	0.00	4009
		MIN	3.49	4003	-17.15	4004	0.00	4009	0.00	4009
	2.00	MAX	8.31	414	2.29	3009	0.00	4009	0.00	4009
		MIN	3.07	4003	-23.13	4004	0.00	4009	0.00	4009
	3.00	MAX	7.89	414	-4.30	3009	0.00	4009	0.00	4009
		MIN	2.30	4004	-26.17	4005	0.00	4009	0.00	4009
	4.00	MAX	7.47	414	-10.48	3009	0.00	4009	0.00	4009
		MIN	1.89	4004	-30.96	4005	0.00	4009	0.00	4009
	5.00	MAX	6.46	415	-14.55	300	0.00	4009	0.00	4009
		MIN	1.47	4004	-35.34	4005	0.00	4009	0.00	4009
	6.00	MAX	6.04	415	-17.24	300	0.00	4009	0.00	4009
		MIN	0.70	4005	-38.00	4006	0.00	4009	0.00	4009
	7.00	MAX	5.62	415	-19.51	300	0.00	4009	0.00	4009
		MIN	0.28	4005	-41.12	4006	0.00	4009	0.00	4009
	8.00	MAX	4.71	4008	-21.37	300	0.00	4009	0.00	4009
		MIN	-0.14	4005	-43.82	4006	0.00	4009	0.00	4009
	9.00	MAX	4.30	4008	-22.80	300	0.00	4009	0.00	4009
		MIN	-0.97	4006	-45.09	4007	0.00	4009	0.00	4009
	10.00	MAX	3.88	4008	-23.83	300	0.00	4009	0.00	4009
		MIN	-1.39	4006	-46.55	4007	0.00	4009	0.00	4009
	11.00	MAX	3.05	4009	-24.43	300	0.00	4009	0.00	4009
		MIN	-1.80	4006	-47.58	4007	0.00	4009	0.00	4009
	12.00	MAX	2.63	4009	-24.60	3000	0.00	4009	0.00	4009
		MIN	-2.64	4007	-47.46	4008	0.00	4009	0.00	4009

MAX/MIN FORCE VALUES FOR MEMB 4, AMONGST ALL SECT LOCATIONS

	FY/ FZ	DIST DIST	LD LD	MZ/ MY	DIST DIST	LD LD	FX	DIST	LD
MAX.	9.74	0.00	313	16.73	0.00	3009			
	0.00	0.00	300	0.00	0.00	300	23.08 C	0.00	314
MIN.	-2.64	12.00	4007	-47.58	11.00	4007			
	0.00	12.00	4009	0.00	12.00	4009	14.03 C	12.00	400

5	0.00	MAX	9.27	415	18.89	3005	0.00	4009	0.00	4009
		MIN	5.03	400	5.49	400	0.00	4009	0.00	4009
	1.00	MAX	8.85	415	12.28	3005	0.00	4009	0.00	4009
		MIN	4.61	400	-2.72	415	0.00	4009	0.00	4009

2.00	MAX	8.44	415	6.09	3005	0.00	4009	0.00	4009
	MIN	4.20	400	-11.36	415	0.00	4009	0.00	4009
3.00	MAX	7.42	414	0.62	3004	0.00	4009	0.00	4009
	MIN	3.78	400	-19.44	415	0.00	4009	0.00	4009
4.00	MAX	7.00	414	-4.38	3004	0.00	4009	0.00	4009
	MIN	3.36	400	-23.35	415	0.00	4009	0.00	4009
5.00	MAX	6.59	414	-8.96	3004	0.00	4009	0.00	4009
	MIN	2.94	400	-29.08	4009	0.00	4009	0.00	4009
6.00	MAX	5.98	4009	-13.05	3003	0.00	4009	0.00	4009
	MIN	2.27	414	-35.27	4009	0.00	4009	0.00	4009
7.00	MAX	5.15	413	-16.45	3003	0.00	4009	0.00	4009
	MIN	1.85	414	-40.91	4009	0.00	4009	0.00	4009
8.00	MAX	4.74	413	-19.43	3003	0.00	4009	0.00	4009
	MIN	1.43	414	-43.22	4009	0.00	4009	0.00	4009
9.00	MAX	4.31	4008	-21.60	3002	0.00	4009	0.00	4009
	MIN	0.42	413	-45.10	4009	0.00	4009	0.00	4009
10.00	MAX	3.47	4007	-23.33	3002	0.00	4009	0.00	4009
	MIN	0.00	413	-46.61	4008	0.00	4009	0.00	4009
11.00	MAX	3.06	4007	-24.32	3000	0.00	4009	0.00	4009
	MIN	-2.21	4009	-47.49	4009	0.00	4009	0.00	4009
12.00	MAX	2.64	4007	-24.60	3000	0.00	4009	0.00	4009
	MIN	-2.63	4009	-47.46	4008	0.00	4009	0.00	4009

MAX/MIN FORCE VALUES FOR MEMB 5, AMONGST ALL SECT LOCATIONS

	FY/ FZ	DIST DIST	LD LD	MZ/ MY	DIST DIST	LD LD	FX	DIST	LD
MAX.	9.27	0.00	315	18.89	0.00	3005			
	0.00	0.00	300	0.00	0.00	300	23.08 C	0.00	314
MIN.	-2.63	12.00	4009	-47.49	11.00	4009			
	0.00	12.00	4009	0.00	12.00	4009	14.03 C	12.00	400

********** END OF FORCE ENVELOPE FROM INTERNAL STORAGE **********

482. LOAD LIST 300 TO 315 400 TO 415 3000 TO 3009 4000 TO 4009
483. PRINT FORCE ENVELOPE NSECTION 4 LIST 1 2

MEMBER FORCE ENVELOPE

ALL UNITS ARE KIP FEET

MEMB	DISTANCE		FY	LD	MZ	LD	FZ	LD	MY	LD
1	0.00	MAX	-10.04	3000	0.00	4009	0.00	4009	0.00	4009
		MIN	-19.29	414	0.00	4009	0.00	4009	0.00	4009
	0.38	MAX	-10.35	3000	7.40	414	0.00	4009	0.00	4009
		MIN	-19.29	414	3.91	3000	0.00	4009	0.00	4009
	0.77	MAX	-10.64	3000	14.81	414	0.00	4009	0.00	4009
		MIN	-19.30	414	7.94	3000	0.00	4009	0.00	4009
	1.15	MAX	-10.93	3000	22.22	414	0.00	4009	0.00	4009
		MIN	-19.32	414	12.08	3000	0.00	4009	0.00	4009
	1.53	MAX	-11.21	3000	29.63	414	0.00	4009	0.00	4009
		MIN	-19.33	414	16.33	3000	0.00	4009	0.00	4009
	1.92	MAX	-11.48	3000	37.05	414	0.00	4009	0.00	4009
		MIN	-19.36	414	20.68	3000	0.00	4009	0.00	4009
	2.30	MAX	-11.73	3000	44.49	414	0.00	4009	0.00	4009
		MIN	-19.38	414	25.13	3000	0.00	4009	0.00	4009
	2.69	MAX	-11.86	4000	51.93	414	0.00	4009	0.00	4009
		MIN	-19.53	314	29.68	3000	0.00	4009	0.00	4009
	3.07	MAX	-11.90	4000	59.38	414	0.00	4009	0.00	4009
		MIN	-19.77	314	34.33	3000	0.00	4009	0.00	4009
	3.45	MAX	-11.94	4000	66.85	414	0.00	4009	0.00	4009
		MIN	-20.00	314	39.06	3000	0.00	4009	0.00	4009
	3.84	MAX	-11.98	4000	74.34	414	0.00	4009	0.00	4009
		MIN	-20.22	314	43.88	3000	0.00	4009	0.00	4009
	4.22	MAX	-12.02	4000	81.84	414	0.00	4009	0.00	4009
		MIN	-20.43	314	48.78	3000	0.00	4009	0.00	4009
	4.60	MAX	-12.07	4000	89.36	414	0.00	4009	0.00	4009
		MIN	-20.63	314	53.76	3000	0.00	4009	0.00	4009

MAX/MIN FORCE VALUES FOR MEMB 1, AMONGST ALL SECT LOCATIONS

	FY/ FZ	DIST	LD	MZ/ MY	DIST	LD	FX	DIST	LD
MAX.	-10.04	0.00	3000	89.36	4.60	414			
	0.00	0.00	300	0.00	0.00	300	19.73 C	0.00	410
MIN.	-20.63	4.60	314	0.00	0.00	4009			
	0.00	4.60	4009	0.00	4.60	4009	12.05 C	4.60	404

2	0.00	MAX	-10.34	300	0.00	4009	0.00	4009	0.00	4009
		MIN	-19.25	413	0.00	4009	0.00	4009	0.00	4009
	0.38	MAX	-10.64	300	7.39	413	0.00	4009	0.00	4009
		MIN	-19.26	413	4.03	300	0.00	4009	0.00	4009

0.77	MAX	-10.94	300	14.78	413	0.00	4009	0.00	4009
	MIN	-19.27	413	8.17	300	0.00	4009	0.00	4009
1.15	MAX	-11.23	300	22.17	413	0.00	4009	0.00	4009
	MIN	-19.28	413	12.42	300	0.00	4009	0.00	4009
1.53	MAX	-11.50	300	29.57	413	0.00	4009	0.00	4009
	MIN	-19.30	413	16.78	300	0.00	4009	0.00	4009
1.92	MAX	-11.77	300	36.98	413	0.00	4009	0.00	4009
	MIN	-19.32	413	21.25	300	0.00	4009	0.00	4009
2.30	MAX	-12.03	300	44.40	413	0.00	4009	0.00	4009
	MIN	-19.34	413	25.81	300	0.00	4009	0.00	4009
2.69	MAX	-12.16	400	51.83	413	0.00	4009	0.00	4009
	MIN	-19.49	313	30.48	300	0.00	4009	0.00	4009
3.07	MAX	-12.19	400	59.27	413	0.00	4009	0.00	4009
	MIN	-19.73	313	35.23	300	0.00	4009	0.00	4009
3.45	MAX	-12.23	400	66.72	413	0.00	4009	0.00	4009
	MIN	-19.96	313	40.08	300	0.00	4009	0.00	4009
3.84	MAX	-12.27	400	74.19	413	0.00	4009	0.00	4009
	MIN	-20.18	313	45.01	300	0.00	4009	0.00	4009
4.22	MAX	-12.32	400	81.68	413	0.00	4009	0.00	4009
	MIN	-20.39	313	50.03	300	0.00	4009	0.00	4009
4.60	MAX	-12.37	400	89.18	413	0.00	4009	0.00	4009
	MIN	-20.59	313	55.12	300	0.00	4009	0.00	4009

MAX/MIN FORCE VALUES FOR MEMB 2, AMONGST ALL SECT LOCATIONS

	FY/ FZ	DIST DIST	LD LD	MZ/ MY	DIST DIST	LD LD	FX	DIST	LD
MAX.	-10.34	0.00	300	89.18	4.60	413			
	0.00	0.00	300	0.00	0.00	300	18.31 C	0.00	414
MIN.	-20.59	4.60	313	0.00	0.00	4009			
	0.00	4.60	4009	0.00	4.60	4009	11.25 C	4.60	400

********** END OF FORCE ENVELOPE FROM INTERNAL STORAGE **********

484. ***
485. FINISH

```
*********** END OF THE STAAD.Pro RUN ***********

  **** DATE= MAR  1,2016   TIME= 10:40:17 ****

************************************************************
*   For technical assistance on STAAD.Pro, please visit    *
*   http://selectservices.bentley.com/en-US/               *
*                                                          *
*   Details about additional assistance from               *
*   Bentley and Partners can be found at program menu      *
*   Help->Technical Support                                *
*                                                          *
*      Copyright (c) 1997-2014 Bentley Systems, Inc.
*                http://www.bentley.com                    *
************************************************************
```

Software licensed to	Job No	Sheet No 1	Rev
	Part		
Job Title	Ref		
	By BK	Date 12/22/15	Chd
Client	File 42.42ft x 5ft-HL93-Fixed.s	Date/Time 01-Mar-2016 10:39	

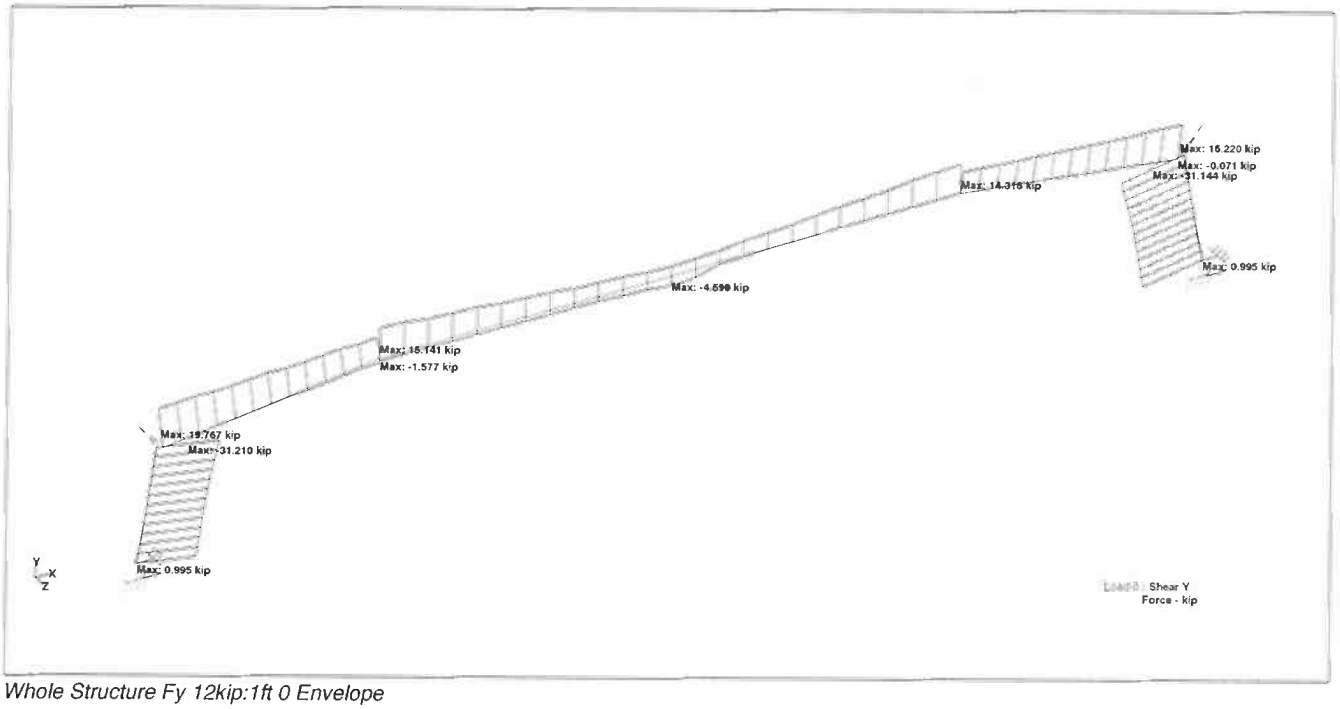

Whole Structure Fy 12kip:1ft 0 Envelope

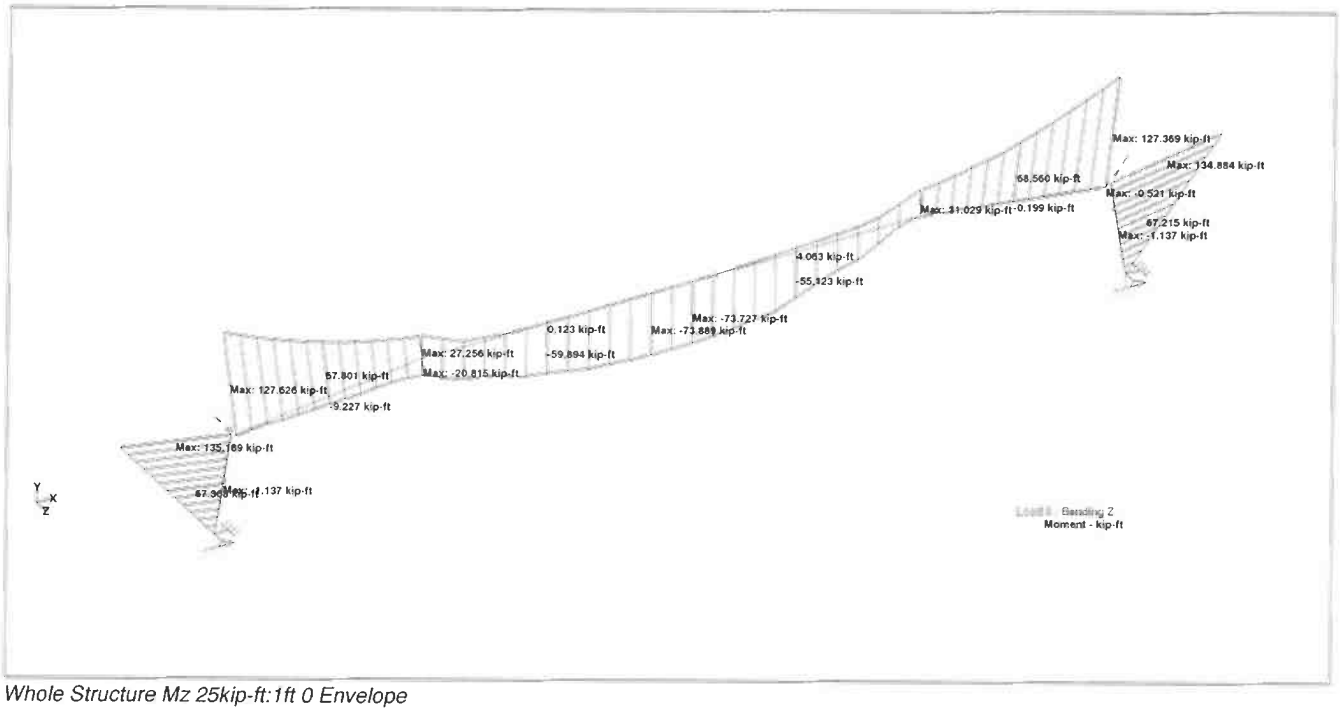

Whole Structure Mz 25kip-ft:1ft 0 Envelope

Section 4
STAAD PRO Output: 42.42’ x 4.583’
Rigid Bridge, 0’-2’ Earth Cover, Spring
HL93 incl. SF & BM Diagrams

```
**************************************************
*                                                *
*           STAAD.Pro V8i SELECTseries5          *
*           Version  20.07.10.64                 *
*           Proprietary Program of               *
*           Bentley Systems, Inc.                *
*           Date=    APR  7, 2016                *
*           Time=    11:31:15                    *
*                                                *
*      USER ID: Hewlett-Packard Company          *
**************************************************
```

B

```
     1. STAAD SPACE
INPUT FILE: 42.42ft x 5ft-HL93-Spring96kpf.STD
     2. START JOB INFORMATION
     3. ENGINEER DATE 12/22/15
     4. ENGINEER NAME BK
     5. END JOB INFORMATION
     6. INPUT WIDTH 79
     7. UNIT FEET KIP
     8. JOINT COORDINATES
     9. 1 -21.96 0 0; 2 21.96 0 0; 3 -21.96 5.583 0; 4 -12 5.583 0; 5 0 5.583 0
    10. 6 12 5.583 0; 7 21.96 5.583 0
    11. MEMBER INCIDENCES
    12. 1 1 3; 2 2 7; 3 3 4; 4 4 5; 5 6 5; 6 7 6
    13. DEFINE MATERIAL START
    14. ISOTROPIC CONCRETE5000
    15. E 580390
    16. POISSON 0.17
    17. DENSITY 0.15
    18. ALPHA 5.5E-006
    19. DAMP 0.05
    20. ISOTROPIC STEEL
    21. E 4.176E+006
    22. POISSON 0.3
    23. DENSITY 0.489024
    24. ALPHA 6.5E-006
    25. DAMP 0.03
    26. END DEFINE MATERIAL
    27. MEMBER PROPERTY AMERICAN
    28. 4 5 PRIS YD 1.416 ZD 1
    29. MEMBER PROPERTY AMERICAN
    30. 1 2 TAPERED 2.083 1 1.5 1 0.2 1 0.2
    31. 3 6 TAPERED 1.83 1 1.416 1 0.2 1 0.2
    32. CONSTANTS
    33. MATERIAL CONCRETE5000 ALL
    34. SUPPORTS
    35. 1 FIXED BUT MZ
    36. 2 FIXED BUT MZ KFX 96
    37. MEMBER OFFSET
    38. 3 START 1 -1.12 0
```

```
39. 6 START -1 -1.12 0
40. 1 END 0.75 -1.04 0
41. 2 END -0.75 -1.04 0
42. DEFINE MOVING LOAD
43. ***TRUCK
44. TYPE 1 LOAD 3.9 3.9 0.975
45. DIST 14 14
46. ***TANDEM
47. TYPE 2 LOAD 3.05 3.05
48. DIST 4
49. ***
50. LOAD 1 LOADTYPE NONE  TITLE LOAD CASE 1- UNIFORM LOAD -COVER 1.0FT
51. MEMBER LOAD
52. 3 TO 6 UNI GY -0.141
53. SELFWEIGHT Y -1
54. LOAD 2 LOADTYPE NONE  TITLE -EMAX
55. MEMBER LOAD
56. 2 TRAP GX -0.49 -0.198
57. 1 TRAP GX 0.49 0.198
58. LOAD 4 LOADTYPE NONE  TITLE -AWL
59. MEMBER LOAD
60. 2 UNI GX -0.28
61. 1 UNI GX 0.28
62. LOAD 5 LOADTYPE NONE  TITLE -IPF-WATER INSIDE
63. MEMBER LOAD
64. 2 TRAP GX 0.286 0 0
65. 1 TRAP GX -0.286 0 0
66. LOAD 3 LOADTYPE NONE  TITLE LOAD CASE LL - LANE LOAD
67. MEMBER LOAD
68. 3 TO 6 UNI GY -0.064
69. LOAD 6 LOADTYPE LIVE  TITLE LOAD CASE LL - TRUCK
70. LOAD GENERATION 16
71. TYPE 1 -49.96 5.583 0 XINC 3
72. LOAD 26 LOADTYPE LIVE  TITLE LOAD CASE LL - TANDEM
**WARNING-A MOVING LOAD THAT WOULD HAVE BEEN APPLIED BEYOND THE X AND Z RANGES
          OF THE STRUCTURE HAS BEEN IGNORED. CASE=    7 WHEEL   1 OF   3
**WARNING-A MOVING LOAD THAT WOULD HAVE BEEN APPLIED BEYOND THE X AND Z RANGES
          OF THE STRUCTURE HAS BEEN IGNORED. CASE=    7 WHEEL   2 OF   3
**WARNING-A MOVING LOAD THAT WOULD HAVE BEEN APPLIED BEYOND THE X AND Z RANGES
          OF THE STRUCTURE HAS BEEN IGNORED. CASE=    8 WHEEL   1 OF   3
**WARNING-A MOVING LOAD THAT WOULD HAVE BEEN APPLIED BEYOND THE X AND Z RANGES
          OF THE STRUCTURE HAS BEEN IGNORED. CASE=    8 WHEEL   2 OF   3
**WARNING-A MOVING LOAD THAT WOULD HAVE BEEN APPLIED BEYOND THE X AND Z RANGES
          OF THE STRUCTURE HAS BEEN IGNORED. CASE=    9 WHEEL   1 OF   3
**WARNING-A MOVING LOAD THAT WOULD HAVE BEEN APPLIED BEYOND THE X AND Z RANGES
          OF THE STRUCTURE HAS BEEN IGNORED. CASE=    9 WHEEL   2 OF   3
**WARNING-A MOVING LOAD THAT WOULD HAVE BEEN APPLIED BEYOND THE X AND Z RANGES
          OF THE STRUCTURE HAS BEEN IGNORED. CASE=   10 WHEEL   1 OF   3
**WARNING-A MOVING LOAD THAT WOULD HAVE BEEN APPLIED BEYOND THE X AND Z RANGES
          OF THE STRUCTURE HAS BEEN IGNORED. CASE=   10 WHEEL   2 OF   3
**WARNING-A MOVING LOAD THAT WOULD HAVE BEEN APPLIED BEYOND THE X AND Z RANGES
          OF THE STRUCTURE HAS BEEN IGNORED. CASE=   11 WHEEL   1 OF   3
**WARNING-A MOVING LOAD THAT WOULD HAVE BEEN APPLIED BEYOND THE X AND Z RANGES
          OF THE STRUCTURE HAS BEEN IGNORED. CASE=   11 WHEEL   2 OF   3
*ADDITIONAL MOVING LOAD MESSAGES SUPPRESSED
*ADDITIONAL MOVING LOAD MESSAGES SUPPRESSED
```

```
 73. LOAD GENERATION 10
 74. TYPE 2 -25.96 5.583 0 XINC 3
 75. ***TRUCK
 76. LOAD COMB 100 COMBINATION LOAD CASE -MAX MOMENT OUTSIDE
 77. 7 1.75 3 1.75 1 1.3 2 1.35 4 1.75
 78. LOAD COMB 101 COMBINATION LOAD CASE
 79. 8 1.75 3 1.75 1 1.3 2 1.35 4 1.75
 80. LOAD COMB 102 COMBINATION LOAD CASE
 81. 9 1.75 3 1.75 1 1.3 2 1.35 4 1.75
 82. LOAD COMB 103 COMBINATION LOAD CASE
 83. 10 1.75 3 1.75 1 1.3 2 1.35 4 1.75
 84. LOAD COMB 104 COMBINATION LOAD CASE
 85. 11 1.75 3 1.75 1 1.3 2 1.35 4 1.75
 86. LOAD COMB 105 COMBINATION LOAD CASE
 87. 12 1.75 3 1.75 1 1.3 2 1.35 4 1.75
 88. LOAD COMB 106 COMBINATION LOAD CASE
 89. 13 1.75 3 1.75 1 1.25 2 1.35 4 1.75
 90. LOAD COMB 107 COMBINATION LOAD CASE
 91. 14 1.75 3 1.75 1 1.3 2 1.35 4 1.75
 92. LOAD COMB 108 COMBINATION LOAD CASE
 93. 15 1.75 3 1.75 1 1.3 2 1.35 4 1.75
 94. LOAD COMB 109 COMBINATION LOAD CASE
 95. 16 1.75 3 1.75 1 1.3 2 1.35 4 1.75
 96. LOAD COMB 110 COMBINATION LOAD CASE
 97. 17 1.75 3 1.75 1 1.3 2 1.35 4 1.75
 98. LOAD COMB 111 COMBINATION LOAD CASE
 99. 18 1.75 3 1.75 1 1.3 2 1.35 4 1.75
100. LOAD COMB 112 COMBINATION LOAD CASE
101. 19 1.75 3 1.75 1 1.3 2 1.35 4 1.75
102. LOAD COMB 113 COMBINATION LOAD CASE
103. 20 1.75 3 1.75 1 1.3 2 1.35 4 1.75
104. LOAD COMB 114 COMBINATION LOAD CASE
105. 21 1.75 3 1.75 1 1.3 2 1.35 4 1.75
106. LOAD COMB 115 COMBINATION LOAD CASE
107. 22 1.75 3 1.75 1 1.3 2 1.35 4 1.75
108. LOAD COMB 200 COMBINATION LOAD CASE -MAX MOMENT INSIDE
109. 7 1.75 3 1.75 1 1.3 2 0.5 5 1.0
110. LOAD COMB 201 COMBINATION LOAD CASE
111. 8 1.75 3 1.75 1 1.3 2 0.5 5 1.0
112. LOAD COMB 202 COMBINATION LOAD CASE
113. 9 1.75 3 1.75 1 1.3 2 0.5 5 1.0
114. LOAD COMB 203 COMBINATION LOAD CASE
115. 10 1.75 3 1.75 1 1.3 2 0.5 5 1.0
116. LOAD COMB 204 COMBINATION LOAD CASE
117. 11 1.75 3 1.75 1 1.3 2 0.5 5 1.0
118. LOAD COMB 205 COMBINATION LOAD CASE
119. 12 1.75 3 1.75 1 1.3 2 0.5 5 1.0
120. LOAD COMB 206 COMBINATION LOAD CASE
121. 13 1.75 3 1.75 1 1.3 2 0.5 5 1.0
122. LOAD COMB 207 COMBINATION LOAD CASE
123. 14 1.75 3 1.75 1 1.3 2 0.5 5 1.0
124. LOAD COMB 208 COMBINATION LOAD CASE
125. 15 1.75 3 1.75 1 1.3 2 0.5 5 1.0
126. LOAD COMB 209 COMBINATION LOAD CASE
127. 16 1.75 3 1.75 1 1.3 2 0.5 5 1.0
128. LOAD COMB 210 COMBINATION LOAD CASE
```

```
129. 17 1.75 3 1.75 1 1.3 2 0.5 5 1.0
130. LOAD COMB 211 COMBINATION LOAD CASE
131. 18 1.75 3 1.75 1 1.3 2 0.5 5 1.0
132. LOAD COMB 212 COMBINATION LOAD CASE
133. 19 1.75 3 1.75 1 1.3 2 0.5 5 1.0
134. LOAD COMB 213 COMBINATION LOAD CASE
135. 20 1.75 3 1.75 1 1.3 2 0.5 5 1.0
136. LOAD COMB 214 COMBINATION LOAD CASE
137. 21 1.75 3 1.75 1 1.3 2 0.5 5 1.0
138. LOAD COMB 215 COMBINATION LOAD CASE
139. 22 1.75 3 1.75 1 1.3 2 0.5 5 1.0
140. LOAD COMB 300 COMBINATION LOAD CASE -CRACK CONTROL-MAX OUTSIDE
141. 7 1.0 3 1.0 1 1.0 2 1.0 4 1.0
142. LOAD COMB 301 COMBINATION LOAD CASE
143. 8 1.0 3 1.0 1 1.0 2 1.0 4 1.0
144. LOAD COMB 302 COMBINATION LOAD CASE
145. 9 1.0 3 1.0 1 1.0 2 1.0 4 1.0
146. LOAD COMB 303 COMBINATION LOAD CASE
147. 10 1.0 3 1.0 1 1.0 2 1.0 4 1.0
148. LOAD COMB 304 COMBINATION LOAD CASE
149. 11 1.0 3 1.0 1 1.0 2 1.0 4 1.0
150. LOAD COMB 305 COMBINATION LOAD CASE
151. 12 1.0 3 1.0 1 1.0 2 1.0 4 1.0
152. LOAD COMB 306 COMBINATION LOAD CASE
153. 13 1.0 3 1.0 1 1.0 2 1.0 4 1.0
154. LOAD COMB 307 COMBINATION LOAD CASE
155. 14 1.0 3 1.0 1 1.0 2 1.0 4 1.0
156. LOAD COMB 308 COMBINATION LOAD CASE
157. 15 1.0 3 1.0 1 1.0 2 1.0 4 1.0
158. LOAD COMB 309 COMBINATION LOAD CASE
159. 16 1.0 3 1.0 1 1.0 2 1.0 4 1.0
160. LOAD COMB 310 COMBINATION LOAD CASE
161. 17 1.0 3 1.0 1 1.0 2 1.0 4 1.0
162. LOAD COMB 311 COMBINATION LOAD CASE
163. 18 1.0 3 1.0 1 1.0 2 1.0 4 1.0
164. LOAD COMB 312 COMBINATION LOAD CASE
165. 19 1.0 3 1.0 1 1.0 2 1.0 4 1.0
166. LOAD COMB 313 COMBINATION LOAD CASE
167. 20 1.0 3 1.0 1 1.0 2 1.0 4 1.0
168. LOAD COMB 314 COMBINATION LOAD CASE
169. 21 1.0 3 1.0 1 1.0 2 1.0 4 1.0
170. LOAD COMB 315 COMBINATION LOAD CASE
171. 22 1.0 3 1.0 1 1.0 2 1.0 4 1.0
172. LOAD COMB 400 COMBINATION LOAD CASE -CRACK CONTROL-MAX INSIDE
173. 7 1.0 3 1.0 1 1.0 2 0.5 5 1.0
174. LOAD COMB 401 COMBINATION LOAD CASE
175. 8 1.0 3 1.0 1 1.0 2 0.5 5 1.0
176. LOAD COMB 402 COMBINATION LOAD CASE
177. 9 1.0 3 1.0 1 1.0 2 0.5 5 1.0
178. LOAD COMB 403 COMBINATION LOAD CASE
179. 10 1.0 3 1.0 1 1.0 2 0.5 5 1.0
180. LOAD COMB 404 COMBINATION LOAD CASE
181. 11 1.0 3 1.0 1 1.0 2 0.5 5 1.0
182. LOAD COMB 405 COMBINATION LOAD CASE
183. 12 1.0 3 1.0 1 1.0 2 0.5 5 1.0
184. LOAD COMB 406 COMBINATION LOAD CASE
```

```
185. 13 1.0 3 1.0 1 1.0 2 0.5 5 1.0
186. LOAD COMB 407 COMBINATION LOAD CASE
187. 14 1.0 3 1.0 1 1.0 2 0.5 5 1.0
188. LOAD COMB 408 COMBINATION LOAD CASE
189. 15 1.0 3 1.0 1 1.0 2 0.5 5 1.0
190. LOAD COMB 409 COMBINATION LOAD CASE
191. 16 1.0 3 1.0 1 1.0 2 0.5 5 1.0
192. LOAD COMB 410 COMBINATION LOAD CASE
193. 17 1.0 3 1.0 1 1.0 2 0.5 5 1.0
194. LOAD COMB 411 COMBINATION LOAD CASE
195. 18 1.0 3 1.0 1 1.0 2 0.5 5 1.0
196. LOAD COMB 412 COMBINATION LOAD CASE
197. 19 1.0 3 1.0 1 1.0 2 0.5 5 1.0
198. LOAD COMB 413 COMBINATION LOAD CASE
199. 20 1.0 3 1.0 1 1.0 2 0.5 5 1.0
200. LOAD COMB 414 COMBINATION LOAD CASE
201. 21 1.0 3 1.0 1 1.0 2 0.5 5 1.0
202. LOAD COMB 415 COMBINATION LOAD CASE
203. 22 1.0 3 1.0 1 1.0 2 0.5 5 1.0
204. LOAD COMB 500 COMBINATION LOAD CASE -CHECK SUPPORT DISPL.
205. 7 1.0 3 1.0 1 1.0
206. LOAD COMB 501 COMBINATION LOAD CASE
207. 8 1.0 3 1.0 1 1.0
208. LOAD COMB 502 COMBINATION LOAD CASE
209. 9 1.0 3 1.0 1 1.0
210. LOAD COMB 503 COMBINATION LOAD CASE
211. 10 1.0 3 1.0 1 1.0
212. LOAD COMB 504 COMBINATION LOAD CASE
213. 11 1.0 3 1.0 1 1.0
214. LOAD COMB 505 COMBINATION LOAD CASE
215. 12 1.0 3 1.0 1 1.0
216. LOAD COMB 506 COMBINATION LOAD CASE
217. 13 1.0 3 1.0 1 1.0
218. LOAD COMB 507 COMBINATION LOAD CASE
219. 14 1.0 3 1.0 1 1.0
220. LOAD COMB 508 COMBINATION LOAD CASE
221. 15 1.0 3 1.0 1 1.0
222. LOAD COMB 509 COMBINATION LOAD CASE
223. 16 1.0 3 1.0 1 1.0
224. LOAD COMB 510 COMBINATION LOAD CASE
225. 17 1.0 3 1.0 1 1.0
226. LOAD COMB 511 COMBINATION LOAD CASE
227. 18 1.0 3 1.0 1 1.0
228. LOAD COMB 512 COMBINATION LOAD CASE
229. 19 1.0 3 1.0 1 1.0
230. LOAD COMB 513 COMBINATION LOAD CASE
231. 20 1.0 3 1.0 1 1.0
232. LOAD COMB 514 COMBINATION LOAD CASE
233. 21 1.0 3 1.0 1 1.0
234. LOAD COMB 515 COMBINATION LOAD CASE
235. 22 1.0 3 1.0 1 1.0
236. LOAD COMB 600 COMBINATION LOAD CASE -CHECK DEFLEC.
237. 7 1.0 3 1.0
238. LOAD COMB 601 COMBINATION LOAD CASE
239. 8 1.0 3 1.0
240. LOAD COMB 602 COMBINATION LOAD CASE
```

```
241. 9 1.0 3 1.0
242. LOAD COMB 603 COMBINATION LOAD CASE
243. 10 1.0 3 1.0
244. LOAD COMB 604 COMBINATION LOAD CASE
245. 11 1.0 3 1.0
246. LOAD COMB 605 COMBINATION LOAD CASE
247. 12 1.0 3 1.0
248. LOAD COMB 606 COMBINATION LOAD CASE
249. 13 1.0 3 1.0
250. LOAD COMB 607 COMBINATION LOAD CASE
251. 14 1.0 3 1.0
252. LOAD COMB 608 COMBINATION LOAD CASE
253. 15 1.0 3 1.0
254. LOAD COMB 609 COMBINATION LOAD CASE
255. 16 1.0 3 1.0
256. LOAD COMB 610 COMBINATION LOAD CASE
257. 17 1.0 3 1.0
258. LOAD COMB 611 COMBINATION LOAD CASE
259. 18 1.0 3 1.0
260. LOAD COMB 612 COMBINATION LOAD CASE
261. 19 1.0 3 1.0
262. LOAD COMB 613 COMBINATION LOAD CASE
263. 20 1.0 3 1.0
264. LOAD COMB 614 COMBINATION LOAD CASE
265. 21 1.0 3 1.0
266. LOAD COMB 615 COMBINATION LOAD CASE
267. 22 1.0 3 1.0
268. ***
269. LOAD COMB 700 COMBINATION LOAD CASE -DL
270. 1 1.0 2 1.0 4 1.0
271. LOAD COMB 701 COMBINATION LOAD CASE -DL
272. 1 1.0 2 0.5 5 1.0
273. ***
274. LOAD COMB 800 COMBINATION LOAD CASE -LL
275. 7 1.0 3 1.0
276. LOAD COMB 801 COMBINATION LOAD CASE
277. 8 1.0 3 1.0
278. LOAD COMB 802 COMBINATION LOAD CASE
279. 9 1.0 3 1.0
280. LOAD COMB 803 COMBINATION LOAD CASE
281. 10 1.0 3 1.0
282. LOAD COMB 804 COMBINATION LOAD CASE
283. 11 1.0 3 1.0
284. LOAD COMB 805 COMBINATION LOAD CASE
285. 12 1.0 3 1.0
286. LOAD COMB 806 COMBINATION LOAD CASE
287. 13 1.0 3 1.0
288. LOAD COMB 807 COMBINATION LOAD CASE
289. 14 1.0 3 1.0
290. LOAD COMB 808 COMBINATION LOAD CASE
291. 15 1.0 3 1.0
292. LOAD COMB 809 COMBINATION LOAD CASE
293. 16 1.0 3 1.0
294. LOAD COMB 810 COMBINATION LOAD CASE
295. 17 1.0 3 1.0
296. LOAD COMB 811 COMBINATION LOAD CASE
```

```
297. 18 1.0 3 1.0
298. LOAD COMB 812 COMBINATION LOAD CASE
299. 19 1.0 3 1.0
300. LOAD COMB 813 COMBINATION LOAD CASE
301. 20 1.0 3 1.0
302. LOAD COMB 814 COMBINATION LOAD CASE
303. 21 1.0 3 1.0
304. LOAD COMB 815 COMBINATION LOAD CASE
305. 22 1.0 3 1.0
306. LOAD COMB 1000 COMBINATION LOAD CASE -MAX MOMENT OUTSIDE
307. 27 1.75 3 1.75 1 1.3 2 1.35 4 1.75
308. LOAD COMB 1001 COMBINATION LOAD CASE
309. 28 1.75 3 1.75 1 1.3 2 1.35 4 1.75
310. LOAD COMB 1002 COMBINATION LOAD CASE
311. 29 1.75 3 1.75 1 1.3 2 1.35 4 1.75
312. LOAD COMB 1003 COMBINATION LOAD CASE
313. 30 1.75 3 1.75 1 1.3 2 1.35 4 1.75
314. LOAD COMB 1004 COMBINATION LOAD CASE
315. 31 1.75 3 1.75 1 1.3 2 1.35 4 1.75
316. LOAD COMB 1005 COMBINATION LOAD CASE
317. 32 1.75 3 1.75 1 1.3 2 1.35 4 1.75
318. LOAD COMB 1006 COMBINATION LOAD CASE
319. 33 1.75 3 1.75 1 1.3 2 1.35 4 1.75
320. LOAD COMB 1007 COMBINATION LOAD CASE
321. 34 1.75 3 1.75 1 1.3 2 1.35 4 1.75
322. LOAD COMB 1008 COMBINATION LOAD CASE
323. 35 1.75 3 1.75 1 1.3 2 1.35 4 1.75
324. LOAD COMB 1009 COMBINATION LOAD CASE
325. 36 1.75 3 1.75 1 1.3 2 1.35 4 1.75
326. LOAD COMB 2000 COMBINATION LOAD CASE -MAX MOMENT INSIDE
327. 27 1.75 3 1.75 1 1.3 2 0.5 5 1.0
328. LOAD COMB 2001 COMBINATION LOAD CASE
329. 28 1.75 3 1.75 1 1.3 2 0.5 5 1.0
330. LOAD COMB 2002 COMBINATION LOAD CASE
331. 29 1.75 3 1.75 1 1.3 2 0.5 5 1.0
332. LOAD COMB 2003 COMBINATION LOAD CASE
333. 30 1.75 3 1.75 1 1.3 2 0.5 5 1.0
334. LOAD COMB 2004 COMBINATION LOAD CASE
335. 31 1.75 3 1.75 1 1.3 2 0.5 5 1.0
336. LOAD COMB 2005 COMBINATION LOAD CASE
337. 32 1.75 3 1.75 1 1.3 2 0.5 5 1.0
338. LOAD COMB 2006 COMBINATION LOAD CASE
339. 33 1.75 3 1.75 1 1.3 2 0.5 5 1.0
340. LOAD COMB 2007 COMBINATION LOAD CASE
341. 34 1.75 3 1.75 1 1.3 2 0.5 5 1.0
342. LOAD COMB 2008 COMBINATION LOAD CASE
343. 35 1.75 3 1.75 1 1.3 2 0.5 5 1.0
344. LOAD COMB 2009 COMBINATION LOAD CASE
345. 36 1.75 3 1.75 1 1.3 2 0.5 5 1.0
346. LOAD COMB 3000 COMBINATION LOAD CASE -CRACK CONTROL-MAX OUTSIDE
347. 27 1.0 3 1.0 1 1.0 2 1.0 4 1.0
348. LOAD COMB 3001 COMBINATION LOAD CASE
349. 28 1.0 3 1.0 1 1.0 2 1.0 4 1.0
350. LOAD COMB 3002 COMBINATION LOAD CASE
351. 29 1.0 3 1.0 1 1.0 2 1.0 4 1.0
352. LOAD COMB 3003 COMBINATION LOAD CASE
```

```
353. 30 1.0 3 1.0 1 1.0 2 1.0 4 1.0
354. LOAD COMB 3004 COMBINATION LOAD CASE
355. 31 1.0 3 1.0 1 1.0 2 1.0 4 1.0
356. LOAD COMB 3005 COMBINATION LOAD CASE
357. 32 1.0 3 1.0 1 1.0 2 1.0 4 1.0
358. LOAD COMB 3006 COMBINATION LOAD CASE
359. 33 1.0 3 1.0 1 1.0 2 1.0 4 1.0
360. LOAD COMB 3007 COMBINATION LOAD CASE
361. 34 1.0 3 1.0 1 1.0 2 1.0 4 1.0
362. LOAD COMB 3008 COMBINATION LOAD CASE
363. 35 1.0 3 1.0 1 1.0 2 1.0 4 1.0
364. LOAD COMB 3009 COMBINATION LOAD CASE
365. 36 1.0 3 1.0 1 1.0 2 1.0 4 1.0
366. LOAD COMB 4000 COMBINATION LOAD CASE -CRACK CONTROL-MAX INSIDE
367. 27 1.0 3 1.0 1 1.0 2 0.5 5 1.0
368. LOAD COMB 4001 COMBINATION LOAD CASE
369. 28 1.0 3 1.0 1 1.0 2 0.5 5 1.0
370. LOAD COMB 4002 COMBINATION LOAD CASE
371. 29 1.0 3 1.0 1 1.0 2 0.5 5 1.0
372. LOAD COMB 4003 COMBINATION LOAD CASE
373. 30 1.0 3 1.0 1 1.0 2 0.5 5 1.0
374. LOAD COMB 4004 COMBINATION LOAD CASE
375. 31 1.0 3 1.0 1 1.0 2 0.5 5 1.0
376. LOAD COMB 4005 COMBINATION LOAD CASE
377. 32 1.0 3 1.0 1 1.0 2 0.5 5 1.0
378. LOAD COMB 4006 COMBINATION LOAD CASE
379. 33 1.0 3 1.0 1 1.0 2 0.5 5 1.0
380. LOAD COMB 4007 COMBINATION LOAD CASE
381. 34 1.0 3 1.0 1 1.0 2 0.5 5 1.0
382. LOAD COMB 4008 COMBINATION LOAD CASE
383. 35 1.0 3 1.0 1 1.0 2 0.5 5 1.0
384. LOAD COMB 4009 COMBINATION LOAD CASE
385. 36 1.0 3 1.0 1 1.0 2 0.5 5 1.0
386. LOAD COMB 5000 COMBINATION LOAD CASE -CHECK SUPPORT DISPL.
387. 27 1.0 3 1.0 1 1.0
388. LOAD COMB 5001 COMBINATION LOAD CASE
389. 28 1.0 3 1.0 1 1.0
390. LOAD COMB 5002 COMBINATION LOAD CASE
391. 29 1.0 3 1.0 1 1.0
392. LOAD COMB 5003 COMBINATION LOAD CASE
393. 30 1.0 3 1.0 1 1.0
394. LOAD COMB 5004 COMBINATION LOAD CASE
395. 31 1.0 3 1.0 1 1.0
396. LOAD COMB 5005 COMBINATION LOAD CASE
397. 32 1.0 3 1.0 1 1.0
398. LOAD COMB 5006 COMBINATION LOAD CASE
399. 33 1.0 3 1.0 1 1.0
400. LOAD COMB 5007 COMBINATION LOAD CASE
401. 34 1.0 3 1.0 1 1.0
402. LOAD COMB 5008 COMBINATION LOAD CASE
403. 35 1.0 3 1.0 1 1.0
404. LOAD COMB 5009 COMBINATION LOAD CASE
405. 36 1.0 3 1.0 1 1.0
406. LOAD COMB 6000 COMBINATION LOAD CASE -CHECK DEFLEC.
407. 27 1.0 3 1.0
408. LOAD COMB 6001 COMBINATION LOAD CASE
```

```
409. 28 1.0 3 1.0
410. LOAD COMB 6002 COMBINATION LOAD CASE
411. 29 1.0 3 1.0
412. LOAD COMB 6003 COMBINATION LOAD CASE
413. 30 1.0 3 1.0
414. LOAD COMB 6004 COMBINATION LOAD CASE
415. 31 1.0 3 1.0
416. LOAD COMB 6005 COMBINATION LOAD CASE
417. 32 1.0 3 1.0
418. LOAD COMB 6006 COMBINATION LOAD CASE
419. 33 1.0 3 1.0
420. LOAD COMB 6007 COMBINATION LOAD CASE
421. 34 1.0 3 1.0
422. LOAD COMB 6008 COMBINATION LOAD CASE
423. 35 1.0 3 1.0
424. LOAD COMB 6009 COMBINATION LOAD CASE
425. 36 1.0 3 1.0
426. ***
427. LOAD COMB 7000 COMBINATION LOAD CASE -DL
428. 1 1.0 2 1.0 4 1.0
429. LOAD COMB 7001 COMBINATION LOAD CASE -DL
430. 1 1.0 2 0.5 5 1.0
431. ***
432. LOAD COMB 8000 COMBINATION LOAD CASE -LL
433. 27 1.0 3 1.0
434. LOAD COMB 8001 COMBINATION LOAD CASE
435. 28 1.0 3 1.0
436. LOAD COMB 8002 COMBINATION LOAD CASE
437. 29 1.0 3 1.0
438. LOAD COMB 8003 COMBINATION LOAD CASE
439. 30 1.0 3 1.0
440. LOAD COMB 8004 COMBINATION LOAD CASE
441. 31 1.0 3 1.0
442. LOAD COMB 8005 COMBINATION LOAD CASE
443. 32 1.0 3 1.0
444. LOAD COMB 8006 COMBINATION LOAD CASE
445. 33 1.0 3 1.0
446. LOAD COMB 8007 COMBINATION LOAD CASE
447. 34 1.0 3 1.0
448. LOAD COMB 8008 COMBINATION LOAD CASE
449. 35 1.0 3 1.0
450. LOAD COMB 8009 COMBINATION LOAD CASE
451. 36 1.0 3 1.0 1
452. PERFORM ANALYSIS
```

```
        P R O B L E M   S T A T I S T I C S
        -----------------------------------

  NUMBER OF JOINTS          7  NUMBER OF MEMBERS       6
  NUMBER OF PLATES          0  NUMBER OF SOLIDS        0
  NUMBER OF SURFACES        0  NUMBER OF SUPPORTS      2


       SOLVER USED IS THE OUT-OF-CORE BASIC SOLVER

  ORIGINAL/FINAL BAND-WIDTH=     5/     5/     32 DOF
TOTAL      PRIMARY LOAD CASES =    33, TOTAL DEGREES OF FREEDOM =      33
TOTAL LOAD COMBINATION  CASES =   186  SO FAR.
  SIZE OF STIFFNESS MATRIX =        2 DOUBLE  KILO-WORDS
  REQRD/AVAIL. DISK SPACE  =     12.0/  41281.6 MB
```

```
453. ***LOAD LIST 1 2 4 5 7 TO 28
454. ***PRINT SUPPORT REACTION ALL
455. LOAD LIST 300 TO 315 400 TO 415 3000 TO 3009 4000 TO 4009
456. PRINT SUPPORT REACTION ALL
```

SUPPORT REACTIONS -UNIT KIP FEET STRUCTURE TYPE = SPACE

JOINT	LOAD	FORCE-X	FORCE-Y	FORCE-Z	MOM-X	MOM-Y	MOM Z
1	300	5.35	11.25	0.00	0.00	0.00	0.00
	301	5.46	11.18	0.00	0.00	0.00	0.00
	302	5.55	11.12	0.00	0.00	0.00	0.00
	303	5.64	11.05	0.00	0.00	0.00	0.00
	304	5.69	11.00	0.00	0.00	0.00	0.00
	305	6.05	14.66	0.00	0.00	0.00	0.00
	306	6.50	14.33	0.00	0.00	0.00	0.00
	307	6.90	14.00	0.00	0.00	0.00	0.00
	308	7.12	13.75	0.00	0.00	0.00	0.00
	309	7.36	13.42	0.00	0.00	0.00	0.00
	310	7.96	16.72	0.00	0.00	0.00	0.00
	311	8.42	16.12	0.00	0.00	0.00	0.00
	312	8.77	15.54	0.00	0.00	0.00	0.00
	313	8.85	15.03	0.00	0.00	0.00	0.00
	314	8.87	14.43	0.00	0.00	0.00	0.00
	315	8.73	13.83	0.00	0.00	0.00	0.00
	400	6.10	11.25	0.00	0.00	0.00	0.00
	401	6.21	11.18	0.00	0.00	0.00	0.00
	402	6.31	11.12	0.00	0.00	0.00	0.00
	403	6.39	11.05	0.00	0.00	0.00	0.00
	404	6.44	11.00	0.00	0.00	0.00	0.00
	405	6.80	14.66	0.00	0.00	0.00	0.00
	406	7.26	14.33	0.00	0.00	0.00	0.00
	407	7.65	14.00	0.00	0.00	0.00	0.00
	408	7.87	13.75	0.00	0.00	0.00	0.00
	409	8.12	13.42	0.00	0.00	0.00	0.00
	410	8.72	16.72	0.00	0.00	0.00	0.00
	411	9.18	16.12	0.00	0.00	0.00	0.00
	412	9.52	15.54	0.00	0.00	0.00	0.00
	413	9.60	15.03	0.00	0.00	0.00	0.00
	414	9.63	14.43	0.00	0.00	0.00	0.00
	415	9.49	13.83	0.00	0.00	0.00	0.00
	3000	5.43	13.28	0.00	0.00	0.00	0.00
	3001	5.77	13.07	0.00	0.00	0.00	0.00
	3002	6.43	15.71	0.00	0.00	0.00	0.00
	3003	7.01	15.29	0.00	0.00	0.00	0.00
	3004	7.45	14.94	0.00	0.00	0.00	0.00
	3005	7.78	14.59	0.00	0.00	0.00	0.00
	3006	8.08	14.17	0.00	0.00	0.00	0.00
	3007	8.26	13.76	0.00	0.00	0.00	0.00
	3008	8.32	13.34	0.00	0.00	0.00	0.00
	3009	8.25	12.92	0.00	0.00	0.00	0.00
	4000	6.19	13.28	0.00	0.00	0.00	0.00
	4001	6.52	13.07	0.00	0.00	0.00	0.00
	4002	7.18	15.71	0.00	0.00	0.00	0.00
	4003	7.77	15.29	0.00	0.00	0.00	0.00

SUPPORT REACTIONS -UNIT KIP FEET STRUCTURE TYPE = SPACE

JOINT	LOAD	FORCE-X	FORCE-Y	FORCE-Z	MOM-X	MOM-Y	MOM Z
	4004	8.20	14.94	0.00	0.00	0.00	0.00
	4005	8.54	14.59	0.00	0.00	0.00	0.00
	4006	8.83	14.17	0.00	0.00	0.00	0.00
	4007	9.01	13.76	0.00	0.00	0.00	0.00
	4008	9.07	13.34	0.00	0.00	0.00	0.00
	4009	9.01	12.92	0.00	0.00	0.00	0.00
2	300	-5.35	10.32	0.00	0.00	0.00	0.00
	301	-5.46	10.38	0.00	0.00	0.00	0.00
	302	-5.55	10.45	0.00	0.00	0.00	0.00
	303	-5.64	10.52	0.00	0.00	0.00	0.00
	304	-5.69	10.56	0.00	0.00	0.00	0.00
	305	-6.05	10.81	0.00	0.00	0.00	0.00
	306	-6.50	11.14	0.00	0.00	0.00	0.00
	307	-6.90	11.47	0.00	0.00	0.00	0.00
	308	-7.12	11.72	0.00	0.00	0.00	0.00
	309	-7.36	12.05	0.00	0.00	0.00	0.00
	310	-7.96	12.65	0.00	0.00	0.00	0.00
	311	-8.42	13.24	0.00	0.00	0.00	0.00
	312	-8.77	13.82	0.00	0.00	0.00	0.00
	313	-8.85	14.34	0.00	0.00	0.00	0.00
	314	-8.87	14.94	0.00	0.00	0.00	0.00
	315	-8.73	14.56	0.00	0.00	0.00	0.00
	400	-6.10	10.32	0.00	0.00	0.00	0.00
	401	-6.21	10.38	0.00	0.00	0.00	0.00
	402	-6.31	10.45	0.00	0.00	0.00	0.00
	403	-6.39	10.52	0.00	0.00	0.00	0.00
	404	-6.44	10.56	0.00	0.00	0.00	0.00
	405	-6.80	10.81	0.00	0.00	0.00	0.00
	406	-7.26	11.14	0.00	0.00	0.00	0.00
	407	-7.65	11.47	0.00	0.00	0.00	0.00
	408	-7.87	11.72	0.00	0.00	0.00	0.00
	409	-8.12	12.05	0.00	0.00	0.00	0.00
	410	-8.72	12.65	0.00	0.00	0.00	0.00
	411	-9.18	13.24	0.00	0.00	0.00	0.00
	412	-9.52	13.82	0.00	0.00	0.00	0.00
	413	-9.60	14.34	0.00	0.00	0.00	0.00
	414	-9.63	14.94	0.00	0.00	0.00	0.00
	415	-9.49	14.56	0.00	0.00	0.00	0.00
	3000	-5.43	10.37	0.00	0.00	0.00	0.00
	3001	-5.77	10.57	0.00	0.00	0.00	0.00
	3002	-6.43	10.99	0.00	0.00	0.00	0.00
	3003	-7.01	11.40	0.00	0.00	0.00	0.00
	3004	-7.45	11.75	0.00	0.00	0.00	0.00
	3005	-7.78	12.10	0.00	0.00	0.00	0.00
	3006	-8.08	12.52	0.00	0.00	0.00	0.00
	3007	-8.26	12.93	0.00	0.00	0.00	0.00

SUPPORT REACTIONS -UNIT KIP FEET STRUCTURE TYPE = SPACE

JOINT	LOAD	FORCE-X	FORCE-Y	FORCE-Z	MOM-X	MOM-Y	MOM Z
	3008	-8.32	13.35	0.00	0.00	0.00	0.00
	3009	-8.25	13.77	0.00	0.00	0.00	0.00
	4000	-6.19	10.37	0.00	0.00	0.00	0.00
	4001	-6.52	10.57	0.00	0.00	0.00	0.00
	4002	-7.18	10.99	0.00	0.00	0.00	0.00
	4003	-7.77	11.40	0.00	0.00	0.00	0.00
	4004	-8.20	11.75	0.00	0.00	0.00	0.00
	4005	-8.54	12.10	0.00	0.00	0.00	0.00
	4006	-8.83	12.52	0.00	0.00	0.00	0.00
	4007	-9.01	12.93	0.00	0.00	0.00	0.00
	4008	-9.07	13.35	0.00	0.00	0.00	0.00
	4009	-9.01	13.77	0.00	0.00	0.00	0.00

********** END OF LATEST ANALYSIS RESULT **********

```
457. ***DL
458. LOAD LIST 700 701 7000 7001
459. PRINT SUPPORT REACTION ALL
```

SUPPORT REACTIONS -UNIT KIP FEET STRUCTURE TYPE = SPACE

JOINT	LOAD	FORCE-X	FORCE-Y	FORCE-Z	MOM-X	MOM-Y	MOM Z
1	700	4.39	8.95	0.00	0.00	0.00	0.00
	701	5.15	8.95	0.00	0.00	0.00	0.00
	7000	4.39	8.95	0.00	0.00	0.00	0.00
	7001	5.15	8.95	0.00	0.00	0.00	0.00
2	700	-4.39	8.95	0.00	0.00	0.00	0.00
	701	-5.15	8.95	0.00	0.00	0.00	0.00
	7000	-4.39	8.95	0.00	0.00	0.00	0.00
	7001	-5.15	8.95	0.00	0.00	0.00	0.00

********** END OF LATEST ANALYSIS RESULT **********

```
460. ***LL
461. LOAD LIST 800 TO 815 8000 TO 8009
462. PRINT SUPPORT REACTION ALL
```

SUPPORT REACTIONS -UNIT KIP FEET STRUCTURE TYPE = SPACE

JOINT	LOAD	FORCE-X	FORCE-Y	FORCE-Z	MOM-X	MOM-Y	MOM Z
1	800	0.95	2.30	0.00	0.00	0.00	0.00
	801	1.06	2.23	0.00	0.00	0.00	0.00
	802	1.16	2.17	0.00	0.00	0.00	0.00
	803	1.24	2.10	0.00	0.00	0.00	0.00
	804	1.29	2.05	0.00	0.00	0.00	0.00
	805	1.65	5.71	0.00	0.00	0.00	0.00
	806	2.11	5.38	0.00	0.00	0.00	0.00
	807	2.50	5.05	0.00	0.00	0.00	0.00
	808	2.72	4.80	0.00	0.00	0.00	0.00
	809	2.97	4.47	0.00	0.00	0.00	0.00
	810	3.57	7.77	0.00	0.00	0.00	0.00
	811	4.03	7.17	0.00	0.00	0.00	0.00
	812	4.37	6.60	0.00	0.00	0.00	0.00
	813	4.45	6.08	0.00	0.00	0.00	0.00
	814	4.48	5.48	0.00	0.00	0.00	0.00
	815	4.34	4.88	0.00	0.00	0.00	0.00
	8000	1.04	4.33	0.00	0.00	0.00	0.00
	8001	1.37	4.12	0.00	0.00	0.00	0.00
	8002	2.03	6.76	0.00	0.00	0.00	0.00
	8003	2.62	6.34	0.00	0.00	0.00	0.00
	8004	3.05	5.99	0.00	0.00	0.00	0.00
	8005	3.39	5.64	0.00	0.00	0.00	0.00
	8006	3.68	5.22	0.00	0.00	0.00	0.00
	8007	3.86	4.81	0.00	0.00	0.00	0.00
	8008	3.92	4.39	0.00	0.00	0.00	0.00
	8009	3.86	3.97	0.00	0.00	0.00	0.00
2	800	-0.95	1.37	0.00	0.00	0.00	0.00
	801	-1.06	1.43	0.00	0.00	0.00	0.00
	802	-1.16	1.50	0.00	0.00	0.00	0.00
	803	-1.24	1.57	0.00	0.00	0.00	0.00
	804	-1.29	1.61	0.00	0.00	0.00	0.00
	805	-1.65	1.86	0.00	0.00	0.00	0.00
	806	-2.11	2.19	0.00	0.00	0.00	0.00
	807	-2.50	2.52	0.00	0.00	0.00	0.00
	808	-2.72	2.77	0.00	0.00	0.00	0.00
	809	-2.97	3.10	0.00	0.00	0.00	0.00
	810	-3.57	3.70	0.00	0.00	0.00	0.00
	811	-4.03	4.30	0.00	0.00	0.00	0.00
	812	-4.37	4.87	0.00	0.00	0.00	0.00
	813	-4.45	5.39	0.00	0.00	0.00	0.00
	814	-4.48	5.99	0.00	0.00	0.00	0.00
	815	-4.34	5.61	0.00	0.00	0.00	0.00
	8000	-1.04	1.42	0.00	0.00	0.00	0.00
	8001	-1.37	1.62	0.00	0.00	0.00	0.00
	8002	-2.03	2.04	0.00	0.00	0.00	0.00
	8003	-2.62	2.45	0.00	0.00	0.00	0.00

SUPPORT REACTIONS -UNIT KIP FEET STRUCTURE TYPE = SPACE

JOINT	LOAD	FORCE-X	FORCE-Y	FORCE-Z	MOM-X	MOM-Y	MOM Z
	8004	-3.05	2.80	0.00	0.00	0.00	0.00
	8005	-3.39	3.15	0.00	0.00	0.00	0.00
	8006	-3.68	3.57	0.00	0.00	0.00	0.00
	8007	-3.86	3.98	0.00	0.00	0.00	0.00
	8008	-3.92	4.40	0.00	0.00	0.00	0.00
	8009	-3.86	4.82	0.00	0.00	0.00	0.00

********** END OF LATEST ANALYSIS RESULT **********

```
463. *** BEAM DISPLACEMENTS AT CL FROM 1.0LL
464. LOAD LIST 600 TO 615 6000 TO 6009
465. PRINT JOINT DISPLACEMENTS LIST 5
```

JOINT DISPLACEMENT (INCH RADIANS) STRUCTURE TYPE = SPACE

JOINT	LOAD	X-TRANS	Y-TRANS	Z-TRANS	X-ROTAN	Y-ROTAN	Z-ROTAN
5	600	0.06064	-0.16890	0.00000	0.00000	0.00000	0.00001
	601	0.06990	-0.18575	0.00000	0.00000	0.00000	0.00004
	602	0.07770	-0.20278	0.00000	0.00000	0.00000	0.00007
	603	0.08367	-0.21926	0.00000	0.00000	0.00000	0.00010
	604	0.08651	-0.22983	0.00000	0.00000	0.00000	0.00010
	605	0.11589	-0.28724	0.00000	0.00000	0.00000	0.00019
	606	0.15157	-0.36472	0.00000	0.00000	0.00000	0.00030
	607	0.17935	-0.43729	0.00000	0.00000	0.00000	0.00036
	608	0.19235	-0.48118	0.00000	0.00000	0.00000	0.00034
	609	0.20380	-0.53425	0.00000	0.00000	0.00000	0.00033
	610	0.24564	-0.63842	0.00000	0.00000	0.00000	0.00041
	611	0.27380	-0.72482	0.00000	0.00000	0.00000	0.00040
	612	0.29060	-0.79257	0.00000	0.00000	0.00000	0.00027
	613	0.28816	-0.80733	0.00000	0.00000	0.00000	0.00009
	614	0.28079	-0.81385	0.00000	0.00000	0.00000	0.00000
	615	0.26344	-0.79245	0.00000	0.00000	0.00000	-0.00008
	6000	0.06817	-0.18058	0.00000	0.00000	0.00000	0.00004
	6001	0.09715	-0.23330	0.00000	0.00000	0.00000	0.00014
	6002	0.15241	-0.33876	0.00000	0.00000	0.00000	0.00034
	6003	0.19711	-0.44360	0.00000	0.00000	0.00000	0.00051
	6004	0.22673	-0.52914	0.00000	0.00000	0.00000	0.00061
	6005	0.24444	-0.60465	0.00000	0.00000	0.00000	0.00063
	6006	0.25514	-0.67880	0.00000	0.00000	0.00000	0.00056
	6007	0.25468	-0.72789	0.00000	0.00000	0.00000	0.00034
	6008	0.24494	-0.74485	0.00000	0.00000	0.00000	0.00000
	6009	0.22772	-0.72697	0.00000	0.00000	0.00000	-0.00035

********** END OF LATEST ANALYSIS RESULT **********

```
466. *** SUPPORT DISPLACEMENTS FROM 1.0DL+1.0LL
467. LOAD LIST 500 TO 515 5000 TO 5009
468. PRINT JOINT DISPLACEMENTS LIST 2
```

JOINT DISPLACEMENT (INCH RADIANS) STRUCTURE TYPE = SPACE

JOINT	LOAD	X-TRANS	Y-TRANS	Z-TRANS	X-ROTAN	Y-ROTAN	Z-ROTAN
2	500	0.76455	0.00000	0.00000	0.00000	0.00000	0.00566
	501	0.77808	0.00000	0.00000	0.00000	0.00000	0.00572
	502	0.79039	0.00000	0.00000	0.00000	0.00000	0.00578
	503	0.80101	0.00000	0.00000	0.00000	0.00000	0.00585
	504	0.80708	0.00000	0.00000	0.00000	0.00000	0.00590
	505	0.85183	0.00000	0.00000	0.00000	0.00000	0.00612
	506	0.90888	0.00000	0.00000	0.00000	0.00000	0.00643
	507	0.95809	0.00000	0.00000	0.00000	0.00000	0.00675
	508	0.98598	0.00000	0.00000	0.00000	0.00000	0.00697
	509	1.01665	0.00000	0.00000	0.00000	0.00000	0.00725
	510	1.09134	0.00000	0.00000	0.00000	0.00000	0.00773
	511	1.14904	0.00000	0.00000	0.00000	0.00000	0.00817
	512	1.19207	0.00000	0.00000	0.00000	0.00000	0.00856
	513	1.20222	0.00000	0.00000	0.00000	0.00000	0.00876
	514	1.20517	0.00000	0.00000	0.00000	0.00000	0.00892
	515	1.18806	0.00000	0.00000	0.00000	0.00000	0.00892
	5000	0.77493	0.00000	0.00000	0.00000	0.00000	0.00570
	5001	0.81725	0.00000	0.00000	0.00000	0.00000	0.00589
	5002	0.89959	0.00000	0.00000	0.00000	0.00000	0.00628
	5003	0.97273	0.00000	0.00000	0.00000	0.00000	0.00669
	5004	1.02691	0.00000	0.00000	0.00000	0.00000	0.00705
	5005	1.06872	0.00000	0.00000	0.00000	0.00000	0.00741
	5006	1.10608	0.00000	0.00000	0.00000	0.00000	0.00781
	5007	1.12842	0.00000	0.00000	0.00000	0.00000	0.00815
	5008	1.13574	0.00000	0.00000	0.00000	0.00000	0.00841
	5009	1.12802	0.00000	0.00000	0.00000	0.00000	0.00856

********** END OF LATEST ANALYSIS RESULT **********

469. LOAD LIST 300 TO 315 400 TO 415 3000 TO 3009 4000 TO 4009
470. PRINT MEMBER FORCES ALL

MEMBER END FORCES STRUCTURE TYPE = SPACE

ALL UNITS ARE -- KIP FEET (LOCAL)

MEMBER	LOAD	JT	AXIAL	SHEAR-Y	SHEAR-Z	TORSION	MOM-Y	MOM-Z
1	300	1	11.97	-3.44	0.00	0.00	0.00	0.00
		3	-11.22	6.48	0.00	0.00	0.00	-23.38
	301	1	11.92	-3.56	0.00	0.00	0.00	0.00
		3	-11.17	6.60	0.00	0.00	0.00	-23.92
	302	1	11.87	-3.67	0.00	0.00	0.00	0.00
		3	-11.12	6.71	0.00	0.00	0.00	-24.42
	303	1	11.82	-3.76	0.00	0.00	0.00	0.00
		3	-11.07	6.80	0.00	0.00	0.00	-24.85
	304	1	11.78	-3.82	0.00	0.00	0.00	0.00
		3	-11.03	6.86	0.00	0.00	0.00	-25.11
	305	1	15.45	-3.58	0.00	0.00	0.00	0.00
		3	-14.70	6.61	0.00	0.00	0.00	-23.99
	306	1	15.20	-4.08	0.00	0.00	0.00	0.00
		3	-14.44	7.12	0.00	0.00	0.00	-26.31
	307	1	14.93	-4.52	0.00	0.00	0.00	0.00
		3	-14.18	7.56	0.00	0.00	0.00	-28.35
	308	1	14.73	-4.78	0.00	0.00	0.00	0.00
		3	-13.97	7.82	0.00	0.00	0.00	-29.55
	309	1	14.44	-5.08	0.00	0.00	0.00	0.00
		3	-13.68	8.12	0.00	0.00	0.00	-30.91
	310	1	17.79	-5.13	0.00	0.00	0.00	0.00
		3	-17.04	8.17	0.00	0.00	0.00	-31.15
	311	1	17.28	-5.68	0.00	0.00	0.00	0.00
		3	-16.53	8.72	0.00	0.00	0.00	-33.70
	312	1	16.77	-6.12	0.00	0.00	0.00	0.00
		3	-16.01	9.15	0.00	0.00	0.00	-35.69
	313	1	16.27	-6.28	0.00	0.00	0.00	0.00
		3	-15.52	9.32	0.00	0.00	0.00	-36.45
	314	1	15.68	-6.40	0.00	0.00	0.00	0.00
		3	-14.93	9.44	0.00	0.00	0.00	-37.01
	315	1	15.07	-6.37	0.00	0.00	0.00	0.00
		3	-14.32	9.40	0.00	0.00	0.00	-36.83
	400	1	12.09	-4.19	0.00	0.00	0.00	0.00
		3	-10.89	4.52	0.00	0.00	0.00	-19.84
	401	1	12.04	-4.31	0.00	0.00	0.00	0.00
		3	-10.85	4.64	0.00	0.00	0.00	-20.38
	402	1	12.00	-4.41	0.00	0.00	0.00	0.00
		3	-10.80	4.75	0.00	0.00	0.00	-20.87
	403	1	11.94	-4.51	0.00	0.00	0.00	0.00
		3	-10.74	4.84	0.00	0.00	0.00	-21.31
	404	1	11.91	-4.56	0.00	0.00	0.00	0.00
		3	-10.71	4.90	0.00	0.00	0.00	-21.56

MEMBER END FORCES STRUCTURE TYPE = SPACE

ALL UNITS ARE -- KIP FEET (LOCAL)

MEMBER	LOAD	JT	AXIAL	SHEAR-Y	SHEAR-Z	TORSION	MOM-Y	MOM-Z
	405	1	15.57	-4.32	0.00	0.00	0.00	0.00
		3	-14.37	4.66	0.00	0.00	0.00	-20.45
	406	1	15.32	-4.83	0.00	0.00	0.00	0.00
		3	-14.12	5.16	0.00	0.00	0.00	-22.77
	407	1	15.06	-5.27	0.00	0.00	0.00	0.00
		3	-13.86	5.60	0.00	0.00	0.00	-24.81
	408	1	14.85	-5.53	0.00	0.00	0.00	0.00
		3	-13.65	5.86	0.00	0.00	0.00	-26.01
	409	1	14.56	-5.83	0.00	0.00	0.00	0.00
		3	-13.36	6.16	0.00	0.00	0.00	-27.37
	410	1	17.92	-5.88	0.00	0.00	0.00	0.00
		3	-16.72	6.21	0.00	0.00	0.00	-27.61
	411	1	17.40	-6.43	0.00	0.00	0.00	0.00
		3	-16.20	6.76	0.00	0.00	0.00	-30.15
	412	1	16.89	-6.86	0.00	0.00	0.00	0.00
		3	-15.69	7.20	0.00	0.00	0.00	-32.15
	413	1	16.39	-7.03	0.00	0.00	0.00	0.00
		3	-15.19	7.36	0.00	0.00	0.00	-32.91
	414	1	15.81	-7.15	0.00	0.00	0.00	0.00
		3	-14.61	7.48	0.00	0.00	0.00	-33.46
	415	1	15.19	-7.11	0.00	0.00	0.00	0.00
		3	-14.00	7.44	0.00	0.00	0.00	-33.29
	3000	1	13.98	-3.19	0.00	0.00	0.00	0.00
		3	-13.23	6.23	0.00	0.00	0.00	-22.24
	3001	1	13.83	-3.56	0.00	0.00	0.00	0.00
		3	-13.08	6.60	0.00	0.00	0.00	-23.93
	3002	1	16.54	-3.78	0.00	0.00	0.00	0.00
		3	-15.79	6.82	0.00	0.00	0.00	-24.94
	3003	1	16.23	-4.43	0.00	0.00	0.00	0.00
		3	-15.48	7.46	0.00	0.00	0.00	-27.91
	3004	1	15.95	-4.91	0.00	0.00	0.00	0.00
		3	-15.20	7.95	0.00	0.00	0.00	-30.14
	3005	1	15.66	-5.30	0.00	0.00	0.00	0.00
		3	-14.91	8.34	0.00	0.00	0.00	-31.93
	3006	1	15.30	-5.66	0.00	0.00	0.00	0.00
		3	-14.55	8.70	0.00	0.00	0.00	-33.60
	3007	1	14.92	-5.91	0.00	0.00	0.00	0.00
		3	-14.17	8.94	0.00	0.00	0.00	-34.72
	3008	1	14.52	-6.03	0.00	0.00	0.00	0.00
		3	-13.76	9.07	0.00	0.00	0.00	-35.30
	3009	1	14.10	-6.04	0.00	0.00	0.00	0.00
		3	-13.34	9.08	0.00	0.00	0.00	-35.33
	4000	1	14.11	-3.94	0.00	0.00	0.00	0.00
		3	-12.91	4.27	0.00	0.00	0.00	-18.69
	4001	1	13.96	-4.31	0.00	0.00	0.00	0.00
		3	-12.76	4.64	0.00	0.00	0.00	-20.38

MEMBER END FORCES STRUCTURE TYPE = SPACE

ALL UNITS ARE -- KIP FEET (LOCAL)

MEMBER	LOAD	JT	AXIAL	SHEAR-Y	SHEAR-Z	TORSION	MOM-Y	MOM-Z
	4002	1	16.67	-4.53	0.00	0.00	0.00	0.00
		3	-15.47	4.86	0.00	0.00	0.00	-21.40
	4003	1	16.35	-5.17	0.00	0.00	0.00	0.00
		3	-15.15	5.51	0.00	0.00	0.00	-24.37
	4004	1	16.08	-5.66	0.00	0.00	0.00	0.00
		3	-14.88	5.99	0.00	0.00	0.00	-26.60
	4005	1	15.79	-6.05	0.00	0.00	0.00	0.00
		3	-14.59	6.38	0.00	0.00	0.00	-28.38
	4006	1	15.42	-6.41	0.00	0.00	0.00	0.00
		3	-14.22	6.74	0.00	0.00	0.00	-30.05
	4007	1	15.04	-6.65	0.00	0.00	0.00	0.00
		3	-13.84	6.99	0.00	0.00	0.00	-31.18
	4008	1	14.64	-6.78	0.00	0.00	0.00	0.00
		3	-13.44	7.11	0.00	0.00	0.00	-31.76
	4009	1	14.22	-6.78	0.00	0.00	0.00	0.00
		3	-13.02	7.12	0.00	0.00	0.00	-31.79
2	300	2	11.05	-3.59	0.00	0.00	0.00	0.00
		7	-10.30	6.63	0.00	0.00	0.00	-24.08
	301	2	11.13	-3.69	0.00	0.00	0.00	0.00
		7	-10.38	6.73	0.00	0.00	0.00	-24.52
	302	2	11.21	-3.78	0.00	0.00	0.00	0.00
		7	-10.46	6.81	0.00	0.00	0.00	-24.92
	303	2	11.29	-3.85	0.00	0.00	0.00	0.00
		7	-10.54	6.89	0.00	0.00	0.00	-25.25
	304	2	11.35	-3.89	0.00	0.00	0.00	0.00
		7	-10.59	6.93	0.00	0.00	0.00	-25.44
	305	2	11.65	-4.20	0.00	0.00	0.00	0.00
		7	-10.89	7.24	0.00	0.00	0.00	-26.88
	306	2	12.05	-4.60	0.00	0.00	0.00	0.00
		7	-11.29	7.64	0.00	0.00	0.00	-28.71
	307	2	12.44	-4.94	0.00	0.00	0.00	0.00
		7	-11.68	7.97	0.00	0.00	0.00	-30.25
	308	2	12.72	-5.11	0.00	0.00	0.00	0.00
		7	-11.97	8.15	0.00	0.00	0.00	-31.08
	309	2	13.09	-5.30	0.00	0.00	0.00	0.00
		7	-12.33	8.34	0.00	0.00	0.00	-31.94
	310	2	13.78	-5.79	0.00	0.00	0.00	0.00
		7	-13.02	8.83	0.00	0.00	0.00	-34.21
	311	2	14.44	-6.15	0.00	0.00	0.00	0.00
		7	-13.69	9.19	0.00	0.00	0.00	-35.86
	312	2	15.06	-6.40	0.00	0.00	0.00	0.00
		7	-14.31	9.44	0.00	0.00	0.00	-36.99
	313	2	15.59	-6.39	0.00	0.00	0.00	0.00
		7	-14.83	9.43	0.00	0.00	0.00	-36.97

MEMBER END FORCES STRUCTURE TYPE = SPACE

ALL UNITS ARE -- KIP FEET (LOCAL)

MEMBER	LOAD	JT	AXIAL	SHEAR-Y	SHEAR-Z	TORSION	MOM-Y	MOM-Z
	314	2	16.18	-6.32	0.00	0.00	0.00	0.00
		7	-15.43	9.36	0.00	0.00	0.00	-36.63
	315	2	15.79	-6.25	0.00	0.00	0.00	0.00
		7	-15.03	9.28	0.00	0.00	0.00	-36.29
	400	2	11.17	-4.34	0.00	0.00	0.00	0.00
		7	-9.97	4.67	0.00	0.00	0.00	-20.53
	401	2	11.26	-4.44	0.00	0.00	0.00	0.00
		7	-10.06	4.77	0.00	0.00	0.00	-20.98
	402	2	11.34	-4.52	0.00	0.00	0.00	0.00
		7	-10.14	4.86	0.00	0.00	0.00	-21.37
	403	2	11.42	-4.60	0.00	0.00	0.00	0.00
		7	-10.22	4.93	0.00	0.00	0.00	-21.71
	404	2	11.47	-4.64	0.00	0.00	0.00	0.00
		7	-10.27	4.97	0.00	0.00	0.00	-21.90
	405	2	11.77	-4.95	0.00	0.00	0.00	0.00
		7	-10.57	5.28	0.00	0.00	0.00	-23.34
	406	2	12.17	-5.35	0.00	0.00	0.00	0.00
		7	-10.97	5.68	0.00	0.00	0.00	-25.16
	407	2	12.56	-5.68	0.00	0.00	0.00	0.00
		7	-11.36	6.01	0.00	0.00	0.00	-26.71
	408	2	12.84	-5.86	0.00	0.00	0.00	0.00
		7	-11.64	6.19	0.00	0.00	0.00	-27.53
	409	2	13.21	-6.05	0.00	0.00	0.00	0.00
		7	-12.01	6.38	0.00	0.00	0.00	-28.40
	410	2	13.90	-6.54	0.00	0.00	0.00	0.00
		7	-12.70	6.87	0.00	0.00	0.00	-30.66
	411	2	14.56	-6.90	0.00	0.00	0.00	0.00
		7	-13.36	7.23	0.00	0.00	0.00	-32.31
	412	2	15.19	-7.14	0.00	0.00	0.00	0.00
		7	-13.99	7.48	0.00	0.00	0.00	-33.44
	413	2	15.71	-7.14	0.00	0.00	0.00	0.00
		7	-14.51	7.47	0.00	0.00	0.00	-33.43
	414	2	16.30	-7.07	0.00	0.00	0.00	0.00
		7	-15.11	7.40	0.00	0.00	0.00	-33.08
	415	2	15.91	-6.99	0.00	0.00	0.00	0.00
		7	-14.71	7.33	0.00	0.00	0.00	-32.75
	3000	2	11.11	-3.67	0.00	0.00	0.00	0.00
		7	-10.36	6.71	0.00	0.00	0.00	-24.42
	3001	2	11.37	-3.97	0.00	0.00	0.00	0.00
		7	-10.62	7.01	0.00	0.00	0.00	-25.80
	3002	2	11.89	-4.55	0.00	0.00	0.00	0.00
		7	-11.13	7.59	0.00	0.00	0.00	-28.48
	3003	2	12.39	-5.06	0.00	0.00	0.00	0.00
		7	-11.64	8.10	0.00	0.00	0.00	-30.83
	3004	2	12.81	-5.43	0.00	0.00	0.00	0.00
		7	-12.05	8.47	0.00	0.00	0.00	-32.54

MEMBER END FORCES STRUCTURE TYPE = SPACE

ALL UNITS ARE -- KIP FEET (LOCAL)

MEMBER	LOAD	JT	AXIAL	SHEAR-Y	SHEAR-Z	TORSION	MOM-Y	MOM-Z
	3005	2	13.21	-5.71	0.00	0.00	0.00	0.00
		7	-12.45	8.74	0.00	0.00	0.00	-33.79
	3006	2	13.67	-5.93	0.00	0.00	0.00	0.00
		7	-12.91	8.97	0.00	0.00	0.00	-34.84
	3007	2	14.11	-6.04	0.00	0.00	0.00	0.00
		7	-13.35	9.08	0.00	0.00	0.00	-35.34
	3008	2	14.53	-6.03	0.00	0.00	0.00	0.00
		7	-13.77	9.07	0.00	0.00	0.00	-35.29
	3009	2	14.93	-5.90	0.00	0.00	0.00	0.00
		7	-14.18	8.94	0.00	0.00	0.00	-34.70
	4000	2	11.23	-4.41	0.00	0.00	0.00	0.00
		7	-10.04	4.75	0.00	0.00	0.00	-20.87
	4001	2	11.49	-4.71	0.00	0.00	0.00	0.00
		7	-10.29	5.05	0.00	0.00	0.00	-22.26
	4002	2	12.01	-5.30	0.00	0.00	0.00	0.00
		7	-10.81	5.63	0.00	0.00	0.00	-24.94
	4003	2	12.51	-5.81	0.00	0.00	0.00	0.00
		7	-11.31	6.14	0.00	0.00	0.00	-27.29
	4004	2	12.93	-6.18	0.00	0.00	0.00	0.00
		7	-11.73	6.51	0.00	0.00	0.00	-28.99
	4005	2	13.33	-6.45	0.00	0.00	0.00	0.00
		7	-12.13	6.78	0.00	0.00	0.00	-30.25
	4006	2	13.79	-6.68	0.00	0.00	0.00	0.00
		7	-12.59	7.01	0.00	0.00	0.00	-31.30
	4007	2	14.23	-6.79	0.00	0.00	0.00	0.00
		7	-13.03	7.12	0.00	0.00	0.00	-31.80
	4008	2	14.65	-6.78	0.00	0.00	0.00	0.00
		7	-13.45	7.11	0.00	0.00	0.00	-31.75
	4009	2	15.05	-6.65	0.00	0.00	0.00	0.00
		7	-13.85	6.98	0.00	0.00	0.00	-31.16
3	300	3	9.40	8.91	0.00	0.00	0.00	20.22
		4	-8.78	-3.93	0.00	0.00	0.00	32.98
	301	3	9.50	8.84	0.00	0.00	0.00	20.77
		4	-8.87	-3.85	0.00	0.00	0.00	34.62
	302	3	9.59	8.76	0.00	0.00	0.00	21.27
		4	-8.96	-3.77	0.00	0.00	0.00	36.31
	303	3	9.66	8.68	0.00	0.00	0.00	21.72
		4	-9.04	-3.70	0.00	0.00	0.00	38.08
	304	3	9.71	8.63	0.00	0.00	0.00	21.98
		4	-9.20	-4.61	0.00	0.00	0.00	37.38
	305	3	10.51	12.21	0.00	0.00	0.00	19.92
		4	-9.53	-4.33	0.00	0.00	0.00	40.73
	306	3	10.93	11.83	0.00	0.00	0.00	22.29
		4	-9.94	-3.94	0.00	0.00	0.00	46.49

MEMBER END FORCES STRUCTURE TYPE = SPACE

ALL UNITS ARE -- KIP FEET (LOCAL)

MEMBER	LOAD	JT	AXIAL	SHEAR-Y	SHEAR-Z	TORSION	MOM-Y	MOM-Z
307		3	11.28	11.45	0.00	0.00	0.00	24.38
		4	-10.29	-3.56	0.00	0.00	0.00	52.61
308		3	11.47	11.18	0.00	0.00	0.00	25.62
		4	-10.96	-7.16	0.00	0.00	0.00	56.74
309		3	11.67	10.82	0.00	0.00	0.00	27.05
		4	-11.17	-6.80	0.00	0.00	0.00	52.05
310		3	12.67	14.02	0.00	0.00	0.00	26.42
		4	-11.68	-6.13	0.00	0.00	0.00	54.40
311		3	13.05	13.37	0.00	0.00	0.00	29.07
		4	-12.07	-5.48	0.00	0.00	0.00	57.48
312		3	13.32	12.75	0.00	0.00	0.00	31.19
		4	-12.34	-4.87	0.00	0.00	0.00	61.43
313		3	13.34	12.23	0.00	0.00	0.00	32.06
		4	-12.84	-8.21	0.00	0.00	0.00	59.82
314		3	13.29	11.63	0.00	0.00	0.00	32.77
		4	-12.79	-7.62	0.00	0.00	0.00	53.73
315		3	13.08	11.06	0.00	0.00	0.00	32.75
		4	-12.58	-7.04	0.00	0.00	0.00	48.54
400		3	7.43	9.16	0.00	0.00	0.00	16.83
		4	-6.81	-4.17	0.00	0.00	0.00	38.59
401		3	7.53	9.08	0.00	0.00	0.00	17.38
		4	-6.91	-4.10	0.00	0.00	0.00	40.22
402		3	7.62	9.00	0.00	0.00	0.00	17.89
		4	-7.00	-4.02	0.00	0.00	0.00	41.92
403		3	7.69	8.93	0.00	0.00	0.00	18.33
		4	-7.07	-3.94	0.00	0.00	0.00	43.69
404		3	7.74	8.88	0.00	0.00	0.00	18.60
		4	-7.23	-4.86	0.00	0.00	0.00	42.99
405		3	8.55	12.46	0.00	0.00	0.00	16.54
		4	-7.56	-4.57	0.00	0.00	0.00	46.33
406		3	8.96	12.07	0.00	0.00	0.00	18.91
		4	-7.97	-4.19	0.00	0.00	0.00	52.10
407		3	9.31	11.70	0.00	0.00	0.00	20.99
		4	-8.32	-3.81	0.00	0.00	0.00	58.22
408		3	9.50	11.42	0.00	0.00	0.00	22.24
		4	-9.00	-7.40	0.00	0.00	0.00	62.34
409		3	9.70	11.06	0.00	0.00	0.00	23.67
		4	-9.20	-7.04	0.00	0.00	0.00	57.66
410		3	10.70	14.26	0.00	0.00	0.00	23.03
		4	-9.72	-6.38	0.00	0.00	0.00	60.01
411		3	11.09	13.61	0.00	0.00	0.00	25.69
		4	-10.10	-5.73	0.00	0.00	0.00	63.09
412		3	11.36	13.00	0.00	0.00	0.00	27.80
		4	-10.37	-5.11	0.00	0.00	0.00	67.04
413		3	11.37	12.48	0.00	0.00	0.00	28.68
		4	-10.87	-8.46	0.00	0.00	0.00	65.43

MEMBER END FORCES STRUCTURE TYPE = SPACE

ALL UNITS ARE -- KIP FEET (LOCAL)

MEMBER	LOAD	JT	AXIAL	SHEAR-Y	SHEAR-Z	TORSION	MOM-Y	MOM-Z
	414	3	11.32	11.88	0.00	0.00	0.00	29.38
		4	-10.82	-7.86	0.00	0.00	0.00	59.34
	415	3	11.11	11.30	0.00	0.00	0.00	29.37
		4	-10.61	-7.29	0.00	0.00	0.00	54.15
	3000	3	9.73	10.92	0.00	0.00	0.00	18.56
		4	-8.85	-3.87	0.00	0.00	0.00	34.12
	3001	3	10.04	10.67	0.00	0.00	0.00	20.28
		4	-9.16	-3.62	0.00	0.00	0.00	39.25
	3002	3	11.02	13.20	0.00	0.00	0.00	20.58
		4	-9.76	-3.13	0.00	0.00	0.00	49.63
	3003	3	11.55	12.72	0.00	0.00	0.00	23.61
		4	-10.29	-2.65	0.00	0.00	0.00	60.40
	3004	3	11.94	12.32	0.00	0.00	0.00	25.89
		4	-11.06	-5.27	0.00	0.00	0.00	63.66
	3005	3	12.23	11.93	0.00	0.00	0.00	27.74
		4	-11.73	-7.91	0.00	0.00	0.00	61.41
	3006	3	12.47	11.48	0.00	0.00	0.00	29.49
		4	-11.97	-7.46	0.00	0.00	0.00	55.59
	3007	3	12.60	11.04	0.00	0.00	0.00	30.70
		4	-12.10	-7.02	0.00	0.00	0.00	50.44
	3008	3	12.60	10.62	0.00	0.00	0.00	31.38
		4	-12.10	-6.60	0.00	0.00	0.00	45.97
	3009	3	12.49	10.22	0.00	0.00	0.00	31.52
		4	-11.99	-6.20	0.00	0.00	0.00	42.16
	4000	3	7.76	11.16	0.00	0.00	0.00	15.18
		4	-6.88	-4.12	0.00	0.00	0.00	39.73
	4001	3	8.07	10.91	0.00	0.00	0.00	16.89
		4	-7.19	-3.87	0.00	0.00	0.00	44.86
	4002	3	9.05	13.45	0.00	0.00	0.00	17.20
		4	-7.80	-3.38	0.00	0.00	0.00	55.24
	4003	3	9.58	12.97	0.00	0.00	0.00	20.22
		4	-8.32	-2.90	0.00	0.00	0.00	66.01
	4004	3	9.97	12.56	0.00	0.00	0.00	22.51
		4	-9.09	-5.52	0.00	0.00	0.00	69.27
	4005	3	10.26	12.17	0.00	0.00	0.00	24.35
		4	-9.76	-8.16	0.00	0.00	0.00	67.02
	4006	3	10.50	11.72	0.00	0.00	0.00	26.10
		4	-10.00	-7.71	0.00	0.00	0.00	61.20
	4007	3	10.63	11.29	0.00	0.00	0.00	27.32
		4	-10.13	-7.27	0.00	0.00	0.00	56.05
	4008	3	10.64	10.87	0.00	0.00	0.00	27.99
		4	-10.13	-6.85	0.00	0.00	0.00	51.57
	4009	3	10.52	10.46	0.00	0.00	0.00	28.14
		4	-10.02	-6.44	0.00	0.00	0.00	47.77
4	300	4	8.22	4.99	0.00	0.00	0.00	-32.98
		5	-8.22	0.02	0.00	0.00	0.00	62.76

MEMBER END FORCES STRUCTURE TYPE = SPACE

ALL UNITS ARE -- KIP FEET (LOCAL)

MEMBER	LOAD	JT	AXIAL	SHEAR-Y	SHEAR-Z	TORSION	MOM-Y	MOM-Z
	301	4	8.33	4.92	0.00	0.00	0.00	-34.62
		5	-8.33	0.09	0.00	0.00	0.00	63.61
	302	4	8.43	4.85	0.00	0.00	0.00	-36.31
		5	-8.43	0.15	0.00	0.00	0.00	64.51
	303	4	8.51	4.79	0.00	0.00	0.00	-38.08
		5	-8.51	0.22	0.00	0.00	0.00	65.49
	304	4	8.56	5.72	0.00	0.00	0.00	-37.38
		5	-8.56	0.27	0.00	0.00	0.00	66.23
	305	4	8.92	5.47	0.00	0.00	0.00	-40.73
		5	-8.92	0.51	0.00	0.00	0.00	69.58
	306	4	9.37	5.14	0.00	0.00	0.00	-46.49
		5	-9.37	0.84	0.00	0.00	0.00	74.29
	307	4	9.77	4.81	0.00	0.00	0.00	-52.61
		5	-9.77	1.17	0.00	0.00	0.00	79.36
	308	4	9.99	8.46	0.00	0.00	0.00	-56.74
		5	-9.99	0.45	0.00	0.00	0.00	81.60
	309	4	10.24	8.13	0.00	0.00	0.00	-52.05
		5	-10.24	0.78	0.00	0.00	0.00	84.62
	310	4	10.83	7.53	0.00	0.00	0.00	-54.40
		5	-10.83	1.38	0.00	0.00	0.00	91.49
	311	4	11.30	6.93	0.00	0.00	0.00	-57.48
		5	-11.30	1.97	0.00	0.00	0.00	99.10
	312	4	11.64	6.36	0.00	0.00	0.00	-61.43
		5	-11.64	-1.35	0.00	0.00	0.00	107.67
	313	4	11.72	9.74	0.00	0.00	0.00	-59.82
		5	-11.72	-0.83	0.00	0.00	0.00	103.94
	314	4	11.75	9.14	0.00	0.00	0.00	-53.73
		5	-11.75	-0.23	0.00	0.00	0.00	102.36
	315	4	11.61	8.55	0.00	0.00	0.00	-48.54
		5	-11.61	0.36	0.00	0.00	0.00	101.70
	400	4	6.24	4.99	0.00	0.00	0.00	-38.59
		5	-6.24	0.02	0.00	0.00	0.00	68.37
	401	4	6.34	4.92	0.00	0.00	0.00	-40.22
		5	-6.34	0.09	0.00	0.00	0.00	69.22
	402	4	6.44	4.85	0.00	0.00	0.00	-41.92
		5	-6.44	0.15	0.00	0.00	0.00	70.12
	403	4	6.53	4.79	0.00	0.00	0.00	-43.69
		5	-6.53	0.22	0.00	0.00	0.00	71.10
	404	4	6.58	5.72	0.00	0.00	0.00	-42.99
		5	-6.58	0.27	0.00	0.00	0.00	71.83
	405	4	6.93	5.47	0.00	0.00	0.00	-46.33
		5	-6.93	0.51	0.00	0.00	0.00	75.18
	406	4	7.39	5.14	0.00	0.00	0.00	-52.10
		5	-7.39	0.84	0.00	0.00	0.00	79.90
	407	4	7.78	4.81	0.00	0.00	0.00	-58.22
		5	-7.78	1.17	0.00	0.00	0.00	84.97

MEMBER END FORCES STRUCTURE TYPE = SPACE

ALL UNITS ARE -- KIP FEET (LOCAL)

MEMBER	LOAD	JT	AXIAL	SHEAR-Y	SHEAR-Z	TORSION	MOM-Y	MOM-Z
	408	4	8.01	8.46	0.00	0.00	0.00	-62.34
		5	-8.01	0.45	0.00	0.00	0.00	87.20
	409	4	8.25	8.13	0.00	0.00	0.00	-57.66
		5	-8.25	0.78	0.00	0.00	0.00	90.22
	410	4	8.85	7.53	0.00	0.00	0.00	-60.01
		5	-8.85	1.38	0.00	0.00	0.00	97.09
	411	4	9.31	6.93	0.00	0.00	0.00	-63.09
		5	-9.31	1.97	0.00	0.00	0.00	104.71
	412	4	9.66	6.36	0.00	0.00	0.00	-67.04
		5	-9.66	-1.35	0.00	0.00	0.00	113.28
	413	4	9.74	9.74	0.00	0.00	0.00	-65.43
		5	-9.74	-0.83	0.00	0.00	0.00	109.55
	414	4	9.76	9.14	0.00	0.00	0.00	-59.34
		5	-9.76	-0.23	0.00	0.00	0.00	107.96
	415	4	9.62	8.55	0.00	0.00	0.00	-54.15
		5	-9.62	0.36	0.00	0.00	0.00	107.31
	3000	4	8.30	4.94	0.00	0.00	0.00	-34.12
		5	-8.30	0.07	0.00	0.00	0.00	63.34
	3001	4	8.64	4.73	0.00	0.00	0.00	-39.25
		5	-8.64	0.28	0.00	0.00	0.00	65.99
	3002	4	9.30	4.32	0.00	0.00	0.00	-49.63
		5	-9.30	0.69	0.00	0.00	0.00	71.40
	3003	4	9.89	3.91	0.00	0.00	0.00	-60.40
		5	-9.89	1.10	0.00	0.00	0.00	77.21
	3004	4	10.32	6.60	0.00	0.00	0.00	-63.66
		5	-10.32	1.45	0.00	0.00	0.00	82.49
	3005	4	10.65	9.30	0.00	0.00	0.00	-61.41
		5	-10.65	1.81	0.00	0.00	0.00	88.34
	3006	4	10.95	8.89	0.00	0.00	0.00	-55.59
		5	-10.95	2.22	0.00	0.00	0.00	95.82
	3007	4	11.13	8.47	0.00	0.00	0.00	-50.44
		5	-11.13	2.64	0.00	0.00	0.00	103.97
	3008	4	11.19	8.05	0.00	0.00	0.00	-45.97
		5	-11.19	0.01	0.00	0.00	0.00	106.58
	3009	4	11.13	7.64	0.00	0.00	0.00	-42.16
		5	-11.13	-2.63	0.00	0.00	0.00	103.75
	4000	4	6.32	4.94	0.00	0.00	0.00	-39.73
		5	-6.32	0.07	0.00	0.00	0.00	68.95
	4001	4	6.66	4.73	0.00	0.00	0.00	-44.86
		5	-6.66	0.28	0.00	0.00	0.00	71.59
	4002	4	7.32	4.32	0.00	0.00	0.00	-55.24
		5	-7.32	0.69	0.00	0.00	0.00	77.01
	4003	4	7.90	3.91	0.00	0.00	0.00	-66.01
		5	-7.90	1.10	0.00	0.00	0.00	82.82
	4004	4	8.33	6.60	0.00	0.00	0.00	-69.27
		5	-8.33	1.45	0.00	0.00	0.00	88.10

MEMBER END FORCES STRUCTURE TYPE = SPACE

ALL UNITS ARE -- KIP FEET (LOCAL)

MEMBER	LOAD	JT	AXIAL	SHEAR-Y	SHEAR-Z	TORSION	MOM-Y	MOM-Z
4005		4	8.67	9.30	0.00	0.00	0.00	-67.02
		5	-8.67	1.81	0.00	0.00	0.00	93.95
4006		4	8.97	8.89	0.00	0.00	0.00	-61.20
		5	-8.97	2.22	0.00	0.00	0.00	101.43
4007		4	9.15	8.47	0.00	0.00	0.00	-56.05
		5	-9.15	2.64	0.00	0.00	0.00	109.58
4008		4	9.21	8.05	0.00	0.00	0.00	-51.57
		5	-9.21	0.01	0.00	0.00	0.00	112.18
4009		4	9.14	7.64	0.00	0.00	0.00	-47.77
		5	-9.14	-2.63	0.00	0.00	0.00	109.36
5	300	6	8.22	5.03	0.00	0.00	0.00	-32.44
		5	-8.22	-0.02	0.00	0.00	0.00	62.76
	301	6	8.33	5.10	0.00	0.00	0.00	-32.50
		5	-8.33	-0.09	0.00	0.00	0.00	63.61
	302	6	8.43	5.16	0.00	0.00	0.00	-32.61
		5	-8.43	-0.15	0.00	0.00	0.00	64.51
	303	6	8.51	5.23	0.00	0.00	0.00	-32.79
		5	-8.51	-0.22	0.00	0.00	0.00	65.49
	304	6	8.56	5.28	0.00	0.00	0.00	-32.98
		5	-8.56	-0.27	0.00	0.00	0.00	66.23
	305	6	8.92	5.52	0.00	0.00	0.00	-33.40
		5	-8.92	-0.51	0.00	0.00	0.00	69.58
	306	6	9.37	5.85	0.00	0.00	0.00	-34.15
		5	-9.37	-0.84	0.00	0.00	0.00	74.29
	307	6	9.77	6.18	0.00	0.00	0.00	-35.25
		5	-9.77	-1.17	0.00	0.00	0.00	79.36
	308	6	9.99	6.43	0.00	0.00	0.00	-36.48
		5	-9.99	-0.45	0.00	0.00	0.00	81.60
	309	6	10.24	6.76	0.00	0.00	0.00	-38.43
		5	-10.24	-0.78	0.00	0.00	0.00	84.62
	310	6	10.83	7.36	0.00	0.00	0.00	-41.05
		5	-10.83	-1.38	0.00	0.00	0.00	91.49
	311	6	11.30	7.96	0.00	0.00	0.00	-44.42
		5	-11.30	-1.97	0.00	0.00	0.00	99.10
	312	6	11.64	7.56	0.00	0.00	0.00	-47.17
		5	-11.64	1.35	0.00	0.00	0.00	107.67
	313	6	11.72	8.07	0.00	0.00	0.00	-48.95
		5	-11.72	0.83	0.00	0.00	0.00	103.94
	314	6	11.75	8.67	0.00	0.00	0.00	-51.88
		5	-11.75	0.23	0.00	0.00	0.00	102.36
	315	6	11.61	9.27	0.00	0.00	0.00	-55.76
		5	-11.61	-0.36	0.00	0.00	0.00	101.70
	400	6	6.24	5.03	0.00	0.00	0.00	-38.05
		5	-6.24	-0.02	0.00	0.00	0.00	68.37

MEMBER END FORCES STRUCTURE TYPE = SPACE

ALL UNITS ARE -- KIP FEET (LOCAL)

MEMBER	LOAD	JT	AXIAL	SHEAR-Y	SHEAR-Z	TORSION	MOM-Y	MOM-Z
401		6	6.34	5.10	0.00	0.00	0.00	-38.11
		5	-6.34	-0.09	0.00	0.00	0.00	69.22
402		6	6.44	5.16	0.00	0.00	0.00	-38.21
		5	-6.44	-0.15	0.00	0.00	0.00	70.12
403		6	6.53	5.23	0.00	0.00	0.00	-38.40
		5	-6.53	-0.22	0.00	0.00	0.00	71.10
404		6	6.58	5.28	0.00	0.00	0.00	-38.58
		5	-6.58	-0.27	0.00	0.00	0.00	71.83
405		6	6.93	5.52	0.00	0.00	0.00	-39.01
		5	-6.93	-0.51	0.00	0.00	0.00	75.18
406		6	7.39	5.85	0.00	0.00	0.00	-39.76
		5	-7.39	-0.84	0.00	0.00	0.00	79.90
407		6	7.78	6.18	0.00	0.00	0.00	-40.86
		5	-7.78	-1.17	0.00	0.00	0.00	84.97
408		6	8.01	6.43	0.00	0.00	0.00	-42.09
		5	-8.01	-0.45	0.00	0.00	0.00	87.20
409		6	8.25	6.76	0.00	0.00	0.00	-44.04
		5	-8.25	-0.78	0.00	0.00	0.00	90.22
410		6	8.85	7.36	0.00	0.00	0.00	-46.66
		5	-8.85	-1.38	0.00	0.00	0.00	97.09
411		6	9.31	7.96	0.00	0.00	0.00	-50.03
		5	-9.31	-1.97	0.00	0.00	0.00	104.71
412		6	9.66	7.56	0.00	0.00	0.00	-52.78
		5	-9.66	1.35	0.00	0.00	0.00	113.28
413		6	9.74	8.07	0.00	0.00	0.00	-54.56
		5	-9.74	0.83	0.00	0.00	0.00	109.55
414		6	9.76	8.67	0.00	0.00	0.00	-57.49
		5	-9.76	0.23	0.00	0.00	0.00	107.96
415		6	9.62	9.27	0.00	0.00	0.00	-61.37
		5	-9.62	-0.36	0.00	0.00	0.00	107.31
3000		6	8.30	5.08	0.00	0.00	0.00	-32.45
		5	-8.30	-0.07	0.00	0.00	0.00	63.34
3001		6	8.64	5.28	0.00	0.00	0.00	-32.62
		5	-8.64	-0.28	0.00	0.00	0.00	65.99
3002		6	9.30	5.70	0.00	0.00	0.00	-33.07
		5	-9.30	-0.69	0.00	0.00	0.00	71.40
3003		6	9.89	6.11	0.00	0.00	0.00	-33.92
		5	-9.89	-1.10	0.00	0.00	0.00	77.21
3004		6	10.32	6.46	0.00	0.00	0.00	-34.99
		5	-10.32	-1.45	0.00	0.00	0.00	82.49
3005		6	10.65	6.81	0.00	0.00	0.00	-36.62
		5	-10.65	-1.81	0.00	0.00	0.00	88.34
3006		6	10.95	7.23	0.00	0.00	0.00	-39.10
		5	-10.95	-2.22	0.00	0.00	0.00	95.82
3007		6	11.13	7.65	0.00	0.00	0.00	-42.25
		5	-11.13	-2.64	0.00	0.00	0.00	103.97

MEMBER END FORCES STRUCTURE TYPE = SPACE

ALL UNITS ARE -- KIP FEET (LOCAL)

MEMBER	LOAD	JT	AXIAL	SHEAR-Y	SHEAR-Z	TORSION	MOM-Y	MOM-Z
	3008	6	11.19	8.06	0.00	0.00	0.00	-46.08
		5	-11.19	-0.01	0.00	0.00	0.00	106.58
	3009	6	11.13	8.48	0.00	0.00	0.00	-50.57
		5	-11.13	2.63	0.00	0.00	0.00	103.75
	4000	6	6.32	5.08	0.00	0.00	0.00	-38.06
		5	-6.32	-0.07	0.00	0.00	0.00	68.95
	4001	6	6.66	5.28	0.00	0.00	0.00	-38.23
		5	-6.66	-0.28	0.00	0.00	0.00	71.59
	4002	6	7.32	5.70	0.00	0.00	0.00	-38.67
		5	-7.32	-0.69	0.00	0.00	0.00	77.01
	4003	6	7.90	6.11	0.00	0.00	0.00	-39.52
		5	-7.90	-1.10	0.00	0.00	0.00	82.82
	4004	6	8.33	6.46	0.00	0.00	0.00	-40.60
		5	-8.33	-1.45	0.00	0.00	0.00	88.10
	4005	6	8.67	6.81	0.00	0.00	0.00	-42.23
		5	-8.67	-1.81	0.00	0.00	0.00	93.95
	4006	6	8.97	7.23	0.00	0.00	0.00	-44.71
		5	-8.97	-2.22	0.00	0.00	0.00	101.43
	4007	6	9.15	7.65	0.00	0.00	0.00	-47.86
		5	-9.15	-2.64	0.00	0.00	0.00	109.58
	4008	6	9.21	8.06	0.00	0.00	0.00	-51.69
		5	-9.21	-0.01	0.00	0.00	0.00	112.18
	4009	6	9.14	8.48	0.00	0.00	0.00	-56.18
		5	-9.14	2.63	0.00	0.00	0.00	109.36
6	300	7	9.28	7.99	0.00	0.00	0.00	21.15
		6	-8.78	-3.97	0.00	0.00	0.00	32.44
	301	7	9.40	8.04	0.00	0.00	0.00	21.57
		6	-8.90	-4.02	0.00	0.00	0.00	32.50
	302	7	9.50	8.10	0.00	0.00	0.00	21.94
		6	-9.00	-4.08	0.00	0.00	0.00	32.61
	303	7	9.60	8.15	0.00	0.00	0.00	22.25
		6	-9.09	-4.13	0.00	0.00	0.00	32.79
	304	7	9.65	8.19	0.00	0.00	0.00	22.42
		6	-9.15	-4.17	0.00	0.00	0.00	32.98
	305	7	10.04	8.39	0.00	0.00	0.00	23.78
		6	-9.53	-4.37	0.00	0.00	0.00	33.40
	306	7	10.53	8.66	0.00	0.00	0.00	25.48
		6	-10.03	-4.64	0.00	0.00	0.00	34.15
	307	7	10.96	8.94	0.00	0.00	0.00	26.91
		6	-10.46	-4.92	0.00	0.00	0.00	35.25
	308	7	11.21	9.16	0.00	0.00	0.00	27.66
		6	-10.71	-5.14	0.00	0.00	0.00	36.48
	309	7	11.50	9.46	0.00	0.00	0.00	28.42
		6	-11.00	-5.44	0.00	0.00	0.00	38.43

MEMBER END FORCES STRUCTURE TYPE = SPACE

ALL UNITS ARE -- KIP FEET (LOCAL)

MEMBER	LOAD	JT	AXIAL	SHEAR-Y	SHEAR-Z	TORSION	MOM-Y	MOM-Z
	310	7	12.17	9.98	0.00	0.00	0.00	30.49
		6	-11.66	-5.96	0.00	0.00	0.00	41.05
	311	7	12.70	10.51	0.00	0.00	0.00	31.95
		6	-12.20	-6.50	0.00	0.00	0.00	44.42
	312	7	13.11	11.04	0.00	0.00	0.00	32.91
		6	-12.49	-6.06	0.00	0.00	0.00	47.17
	313	7	13.26	11.54	0.00	0.00	0.00	32.76
		6	-12.63	-6.56	0.00	0.00	0.00	48.95
	314	7	13.35	12.14	0.00	0.00	0.00	32.26
		6	-12.73	-7.15	0.00	0.00	0.00	51.88
	315	7	13.17	11.78	0.00	0.00	0.00	32.03
		6	-12.67	-7.76	0.00	0.00	0.00	55.76
	400	7	7.31	8.24	0.00	0.00	0.00	17.76
		6	-6.81	-4.22	0.00	0.00	0.00	38.05
	401	7	7.43	8.29	0.00	0.00	0.00	18.18
		6	-6.93	-4.27	0.00	0.00	0.00	38.11
	402	7	7.54	8.34	0.00	0.00	0.00	18.55
		6	-7.03	-4.32	0.00	0.00	0.00	38.21
	403	7	7.63	8.40	0.00	0.00	0.00	18.87
		6	-7.13	-4.38	0.00	0.00	0.00	38.40
	404	7	7.68	8.44	0.00	0.00	0.00	19.04
		6	-7.18	-4.42	0.00	0.00	0.00	38.58
	405	7	8.07	8.63	0.00	0.00	0.00	20.39
		6	-7.57	-4.62	0.00	0.00	0.00	39.01
	406	7	8.56	8.91	0.00	0.00	0.00	22.10
		6	-8.06	-4.89	0.00	0.00	0.00	39.76
	407	7	8.99	9.19	0.00	0.00	0.00	23.52
		6	-8.49	-5.17	0.00	0.00	0.00	40.86
	408	7	9.25	9.40	0.00	0.00	0.00	24.27
		6	-8.74	-5.39	0.00	0.00	0.00	42.09
	409	7	9.53	9.70	0.00	0.00	0.00	25.03
		6	-9.03	-5.69	0.00	0.00	0.00	44.04
	410	7	10.20	10.22	0.00	0.00	0.00	27.10
		6	-9.69	-6.21	0.00	0.00	0.00	46.66
	411	7	10.73	10.76	0.00	0.00	0.00	28.57
		6	-10.23	-6.74	0.00	0.00	0.00	50.03
	412	7	11.14	11.29	0.00	0.00	0.00	29.53
		6	-10.52	-6.30	0.00	0.00	0.00	52.78
	413	7	11.29	11.79	0.00	0.00	0.00	29.37
		6	-10.66	-6.80	0.00	0.00	0.00	54.56
	414	7	11.38	12.38	0.00	0.00	0.00	28.88
		6	-10.76	-7.40	0.00	0.00	0.00	57.49
	415	7	11.20	12.02	0.00	0.00	0.00	28.65
		6	-10.70	-8.01	0.00	0.00	0.00	61.37
	3000	7	9.37	8.03	0.00	0.00	0.00	21.47
		6	-8.87	-4.01	0.00	0.00	0.00	32.45

MEMBER END FORCES STRUCTURE TYPE = SPACE

ALL UNITS ARE -- KIP FEET (LOCAL)

MEMBER	LOAD	JT	AXIAL	SHEAR-Y	SHEAR-Z	TORSION	MOM-Y	MOM-Z
3001		7	9.73	8.19	0.00	0.00	0.00	22.78
		6	-9.23	-4.17	0.00	0.00	0.00	32.62
3002		7	10.44	8.52	0.00	0.00	0.00	25.30
		6	-9.94	-4.50	0.00	0.00	0.00	33.07
3003		7	11.07	8.86	0.00	0.00	0.00	27.50
		6	-10.57	-4.84	0.00	0.00	0.00	33.92
3004		7	11.54	9.15	0.00	0.00	0.00	29.08
		6	-11.04	-5.13	0.00	0.00	0.00	34.99
3005		7	11.92	9.46	0.00	0.00	0.00	30.23
		6	-11.42	-5.44	0.00	0.00	0.00	36.62
3006		7	12.27	9.83	0.00	0.00	0.00	31.14
		6	-11.76	-5.82	0.00	0.00	0.00	39.10
3007		7	12.50	10.23	0.00	0.00	0.00	31.52
		6	-11.99	-6.21	0.00	0.00	0.00	42.25
3008		7	12.61	10.63	0.00	0.00	0.00	31.37
		6	-12.10	-6.61	0.00	0.00	0.00	46.08
3009		7	12.60	11.05	0.00	0.00	0.00	30.68
		6	-12.09	-7.04	0.00	0.00	0.00	50.57
4000		7	7.40	8.27	0.00	0.00	0.00	18.09
		6	-6.90	-4.26	0.00	0.00	0.00	38.06
4001		7	7.76	8.44	0.00	0.00	0.00	19.39
		6	-7.26	-4.42	0.00	0.00	0.00	38.23
4002		7	8.47	8.77	0.00	0.00	0.00	21.92
		6	-7.97	-4.75	0.00	0.00	0.00	38.67
4003		7	9.10	9.10	0.00	0.00	0.00	24.12
		6	-8.60	-5.09	0.00	0.00	0.00	39.52
4004		7	9.57	9.40	0.00	0.00	0.00	25.70
		6	-9.07	-5.38	0.00	0.00	0.00	40.60
4005		7	9.95	9.70	0.00	0.00	0.00	26.84
		6	-9.45	-5.69	0.00	0.00	0.00	42.23
4006		7	10.30	10.08	0.00	0.00	0.00	27.76
		6	-9.80	-6.06	0.00	0.00	0.00	44.71
4007		7	10.53	10.47	0.00	0.00	0.00	28.14
		6	-10.02	-6.45	0.00	0.00	0.00	47.86
4008		7	10.64	10.88	0.00	0.00	0.00	27.98
		6	-10.13	-6.86	0.00	0.00	0.00	51.69
4009		7	10.63	11.30	0.00	0.00	0.00	27.29
		6	-10.12	-7.28	0.00	0.00	0.00	56.18

********** END OF LATEST ANALYSIS RESULT **********

```
471. ***
472. LOAD LIST 100 TO 115 200 TO 215 1000 TO 1009 2000 TO 2009
473. PRINT FORCE ENVELOPE NSECTION 4 LIST 3 6
```

MEMBER FORCE ENVELOPE

ALL UNITS ARE KIP FEET

MEMB	DISTANCE		FY	LD	MZ	LD	FZ	LD	MY	LD
3	0.00	MAX	21.82	210	49.84	114	0.00	2009	0.00	2009
		MIN	12.00	104	19.87	2000	0.00	2009	0.00	2009
	0.75	MAX	21.33	210	37.77	115	0.00	2009	0.00	2009
		MIN	10.22	1000	8.24	2002	0.00	2009	0.00	2009
	1.50	MAX	20.85	210	26.14	1009	0.00	2009	0.00	2009
		MIN	9.74	1000	-6.56	2002	0.00	2009	0.00	2009
	2.26	MAX	19.24	211	15.93	1009	0.00	2009	0.00	2009
		MIN	9.27	1000	-19.63	2002	0.00	2009	0.00	2009
	3.01	MAX	18.77	211	6.07	1009	0.00	2009	0.00	2009
		MIN	8.37	1001	-29.73	2002	0.00	2009	0.00	2009
	3.76	MAX	18.31	211	-3.44	1009	0.00	2009	0.00	2009
		MIN	7.90	1001	-40.34	2003	0.00	2009	0.00	2009
	4.51	MAX	17.85	211	-12.60	1009	0.00	2009	0.00	2009
		MIN	7.44	1001	-53.09	2003	0.00	2009	0.00	2009
	5.27	MAX	16.32	212	-20.29	100	0.00	2009	0.00	2009
		MIN	6.99	1001	-64.08	2003	0.00	2009	0.00	2009
	6.02	MAX	15.87	212	-25.78	100	0.00	2009	0.00	2009
		MIN	5.68	1002	-72.16	2003	0.00	2009	0.00	2009
	6.77	MAX	15.43	212	-30.94	100	0.00	2009	0.00	2009
		MIN	5.23	1002	-80.54	2004	0.00	2009	0.00	2009
	7.52	MAX	14.99	212	-35.76	100	0.00	2009	0.00	2009
		MIN	4.80	1002	-91.41	2004	0.00	2009	0.00	2009
	8.28	MAX	13.64	213	-40.25	100	0.00	2009	0.00	2009
		MIN	4.36	1002	-100.48	2004	0.00	2009	0.00	2009
	9.03	MAX	13.21	213	-44.42	100	0.00	2009	0.00	2009
		MIN	3.09	1003	-106.71	2004	0.00	2009	0.00	2009

MAX/MIN FORCE VALUES FOR MEMB 3, AMONGST ALL SECT LOCATIONS

	FY/ FZ	DIST DIST	LD LD	MZ/ MY	DIST DIST	LD LD	FX	DIST	LD
MAX.	21.82	0.00	210	49.84	0.00	114			
	0.00	0.00	100	0.00	0.00	100	20.16 C	0.00	113
MIN.	3.09	9.03	1003	-106.71	9.03	2004			
	0.00	9.03	2009	0.00	9.03	2009	9.28 C	9.03	200

6	0.00	MAX	18.52	214	50.09	112	0.00	2009	0.00	2009
		MIN	10.88	100	24.40	200	0.00	2009	0.00	2009
	0.75	MAX	18.04	214	38.06	112	0.00	2009	0.00	2009
		MIN	10.40	100	16.10	200	0.00	2009	0.00	2009

1.50	MAX	17.56	214	26.49	1006	0.00	2009	0.00	2009
	MIN	9.92	100	8.16	200	0.00	2009	0.00	2009
2.26	MAX	16.46	215	16.77	1006	0.00	2009	0.00	2009
	MIN	9.45	100	0.59	200	0.00	2009	0.00	2009
3.01	MAX	15.99	215	7.79	1005	0.00	2009	0.00	2009
	MIN	8.98	100	-7.54	215	0.00	2009	0.00	2009
3.76	MAX	15.53	215	-0.70	1004	0.00	2009	0.00	2009
	MIN	8.51	100	-19.40	215	0.00	2009	0.00	2009
4.51	MAX	15.07	215	-8.46	1004	0.00	2009	0.00	2009
	MIN	8.05	100	-30.91	215	0.00	2009	0.00	2009
5.27	MAX	14.61	215	-15.88	1004	0.00	2009	0.00	2009
	MIN	7.60	100	-42.07	215	0.00	2009	0.00	2009
6.02	MAX	14.16	215	-22.63	1003	0.00	2009	0.00	2009
	MIN	7.15	100	-52.90	215	0.00	2009	0.00	2009
6.77	MAX	13.72	215	-28.83	1002	0.00	2009	0.00	2009
	MIN	6.71	100	-63.39	215	0.00	2009	0.00	2009
7.52	MAX	13.28	215	-34.40	1002	0.00	2009	0.00	2009
	MIN	6.27	100	-73.55	215	0.00	2009	0.00	2009
8.28	MAX	12.85	215	-39.23	1000	0.00	2009	0.00	2009
	MIN	5.83	100	-83.38	215	0.00	2009	0.00	2009
9.03	MAX	12.42	215	-43.49	100	0.00	2009	0.00	2009
	MIN	5.40	100	-92.88	215	0.00	2009	0.00	2009

MAX/MIN FORCE VALUES FOR MEMB 6, AMONGST ALL SECT LOCATIONS

	FY/ FZ	DIST DIST	LD LD	MZ/ MY	DIST DIST	LD LD	FX	DIST	LD
MAX.	18.52	0.00	214	50.09	0.00	112			
	0.00	0.00	100	0.00	0.00	100	20.18 C	0.00	114
MIN.	5.40	9.03	100	-92.88	9.03	215			
	0.00	9.03	2009	0.00	9.03	2009	9.29 C	9.03	200

********** END OF FORCE ENVELOPE FROM INTERNAL STORAGE **********

474. LOAD LIST 100 TO 115 200 TO 215 1000 TO 1009 2000 TO 2009
475. PRINT FORCE ENVELOPE NSECTION 4 LIST 4 5

MEMBER FORCE ENVELOPE

ALL UNITS ARE KIP FEET

MEMB	DISTANCE		FY	LD	MZ	LD	FZ	LD	MY	LD
4	0.00	MAX	15.14	213	-44.42	100	0.00	2009	0.00	2009
		MIN	4.93	2003	-106.71	2004	0.00	2009	0.00	2009
	1.00	MAX	14.57	213	-50.95	100	0.00	2009	0.00	2009
		MIN	4.35	2003	-116.85	2005	0.00	2009	0.00	2009
	2.00	MAX	12.95	214	-56.91	100	0.00	2009	0.00	2009
		MIN	3.78	2003	-125.25	2005	0.00	2009	0.00	2009
	3.00	MAX	12.38	214	-62.30	100	0.00	2009	0.00	2009
		MIN	2.60	2004	-132.85	2005	0.00	2009	0.00	2009
	4.00	MAX	11.81	214	-67.12	100	0.00	2009	0.00	2009
		MIN	2.03	2004	-142.59	2006	0.00	2009	0.00	2009
	5.00	MAX	10.19	215	-71.37	100	0.00	2009	0.00	2009
		MIN	1.46	2004	-148.53	2006	0.00	2009	0.00	2009
	6.00	MAX	9.62	215	-75.04	100	0.00	2009	0.00	2009
		MIN	0.27	2005	-153.70	2006	0.00	2009	0.00	2009
	7.00	MAX	9.05	215	-78.15	100	0.00	2009	0.00	2009
		MIN	-0.30	2005	-159.97	2007	0.00	2009	0.00	2009
	8.00	MAX	7.61	2008	-80.68	100	0.00	2009	0.00	2009
		MIN	-0.87	2005	-163.48	2007	0.00	2009	0.00	2009
	9.00	MAX	7.04	2008	-82.64	100	0.00	2009	0.00	2009
		MIN	-2.17	2006	-166.20	2007	0.00	2009	0.00	2009
	10.00	MAX	6.47	2008	-84.03	100	0.00	2009	0.00	2009
		MIN	-2.75	2006	-169.02	2008	0.00	2009	0.00	2009
	11.00	MAX	5.17	2009	-84.85	100	0.00	2009	0.00	2009
		MIN	-3.32	2006	-170.08	2008	0.00	2009	0.00	2009
	12.00	MAX	4.60	2009	-85.10	100	0.00	2009	0.00	2009
		MIN	-4.62	2007	-172.28	212	0.00	2009	0.00	2009

MAX/MIN FORCE VALUES FOR MEMB 4, AMONGST ALL SECT LOCATIONS

	FY/ FZ	DIST DIST	LD LD	MZ/ MY	DIST DIST	LD LD	FX	DIST	LD
MAX.	15.14	0.00	113	-44.42	0.00	100			
	0.00	0.00	100	0.00	0.00	100	17.77 C	0.00	114
MIN.	-4.62	12.00	2007	-172.28	12.00	212			
	0.00	12.00	2009	0.00	12.00	2009	8.50 C	12.00	200

5	0.00	MAX	14.32	215	-43.49	100	0.00	2009	0.00	2009
		MIN	6.90	200	-92.88	215	0.00	2009	0.00	2009
	1.00	MAX	13.74	215	-50.10	100	0.00	2009	0.00	2009
		MIN	6.32	200	-106.91	215	0.00	2009	0.00	2009

2.00	MAX	13.17	215	-56.14	100	0.00	2009	0.00	2009
	MIN	5.75	200	-120.37	215	0.00	2009	0.00	2009
3.00	MAX	11.56	214	-61.60	100	0.00	2009	0.00	2009
	MIN	5.18	200	-132.98	215	0.00	2009	0.00	2009
4.00	MAX	10.99	214	-66.50	100	0.00	2009	0.00	2009
	MIN	4.61	200	-138.47	215	0.00	2009	0.00	2009
5.00	MAX	10.41	214	-70.82	100	0.00	2009	0.00	2009
	MIN	4.04	200	-145.30	214	0.00	2009	0.00	2009
6.00	MAX	9.50	2009	-74.58	100	0.00	2009	0.00	2009
	MIN	3.02	214	-155.15	214	0.00	2009	0.00	2009
7.00	MAX	8.22	213	-77.76	100	0.00	2009	0.00	2009
	MIN	2.45	214	-160.12	2009	0.00	2009	0.00	2009
8.00	MAX	7.65	213	-80.37	100	0.00	2009	0.00	2009
	MIN	1.87	214	-163.43	2009	0.00	2009	0.00	2009
9.00	MAX	7.06	2008	-82.41	100	0.00	2009	0.00	2009
	MIN	0.26	213	-167.55	213	0.00	2009	0.00	2009
10.00	MAX	5.76	2007	-83.88	100	0.00	2009	0.00	2009
	MIN	-0.32	213	-169.19	2008	0.00	2009	0.00	2009
11.00	MAX	5.19	2007	-84.77	100	0.00	2009	0.00	2009
	MIN	-4.03	2009	-170.06	2008	0.00	2009	0.00	2009
12.00	MAX	4.62	2007	-85.10	100	0.00	2009	0.00	2009
	MIN	-4.60	2009	-172.28	212	0.00	2009	0.00	2009

MAX/MIN FORCE VALUES FOR MEMB 5, AMONGST ALL SECT LOCATIONS

	FY/ FZ	DIST DIST	LD LD	MZ/ MY	DIST DIST	LD LD	FX	DIST	LD
MAX.	14.32	0.00	115	-43.49	0.00	100			
	0.00	0.00	100	0.00	0.00	100	17.77 C	0.00	114
MIN.	-4.60	12.00	2009	-172.28	12.00	212			
	0.00	12.00	2009	0.00	12.00	2009	8.50 C	12.00	200

********** END OF FORCE ENVELOPE FROM INTERNAL STORAGE **********

476. LOAD LIST 100 TO 115 200 TO 215 1000 TO 1009 2000 TO 2009
477. PRINT FORCE ENVELOPE NSECTION 4 LIST 1 2

MEMBER FORCE ENVELOPE

ALL UNITS ARE KIP FEET

MEMB	DISTANCE		FY	LD	MZ	LD	FZ	LD	MY	LD
1	0.00	MAX	-4.13	1000	0.00	2009	0.00	2009	0.00	2009
		MIN	-10.88	214	0.00	2009	0.00	2009	0.00	2009
	0.38	MAX	-4.58	1000	4.18	214	0.00	2009	0.00	2009
		MIN	-10.89	214	1.67	1000	0.00	2009	0.00	2009
	0.77	MAX	-5.03	1000	8.36	214	0.00	2009	0.00	2009
		MIN	-10.91	214	3.52	1000	0.00	2009	0.00	2009
	1.15	MAX	-5.32	2000	12.55	214	0.00	2009	0.00	2009
		MIN	-11.07	114	5.53	1000	0.00	2009	0.00	2009
	1.53	MAX	-5.34	2000	16.75	214	0.00	2009	0.00	2009
		MIN	-11.48	114	7.70	1000	0.00	2009	0.00	2009
	1.92	MAX	-5.37	2000	20.96	214	0.00	2009	0.00	2009
		MIN	-11.89	114	10.03	1000	0.00	2009	0.00	2009
	2.30	MAX	-5.40	2000	25.44	114	0.00	2009	0.00	2009
		MIN	-12.28	114	12.25	2000	0.00	2009	0.00	2009
	2.69	MAX	-5.43	2000	30.22	114	0.00	2009	0.00	2009
		MIN	-12.65	114	14.33	2000	0.00	2009	0.00	2009
	3.07	MAX	-5.47	2000	35.15	114	0.00	2009	0.00	2009
		MIN	-13.02	114	16.42	2000	0.00	2009	0.00	2009
	3.45	MAX	-5.51	2000	40.21	114	0.00	2009	0.00	2009
		MIN	-13.37	114	18.53	2000	0.00	2009	0.00	2009
	3.84	MAX	-5.56	2000	45.40	114	0.00	2009	0.00	2009
		MIN	-13.70	114	20.65	2000	0.00	2009	0.00	2009
	4.22	MAX	-5.61	2000	50.72	114	0.00	2009	0.00	2009
		MIN	-14.03	114	22.79	2000	0.00	2009	0.00	2009
	4.60	MAX	-5.66	2000	56.17	114	0.00	2009	0.00	2009
		MIN	-14.34	114	24.96	2000	0.00	2009	0.00	2009

MAX/MIN FORCE VALUES FOR MEMB 1, AMONGST ALL SECT LOCATIONS

	FY/ FZ	DIST DIST	LD LD	MZ/ MY	DIST DIST	LD LD	FX	DIST	LD
MAX.	-4.13	0.00	1000	56.17	4.60	114			
	0.00	0.00	100	0.00	0.00	100	27.00 C	0.00	210
MIN.	-14.34	4.60	114	0.00	0.00	2009			
	0.00	4.60	2009	0.00	4.60	2009	14.92 C	4.60	204

2	0.00	MAX	-4.83	100	0.00	2009	0.00	2009	0.00	2009
		MIN	-10.88	212	0.00	2009	0.00	2009	0.00	2009
	0.38	MAX	-5.28	100	4.18	212	0.00	2009	0.00	2009
		MIN	-10.89	212	1.94	100	0.00	2009	0.00	2009

0.77	MAX	-5.73	100	8.36	212	0.00	2009	0.00	2009
	MIN	-10.90	212	4.05	100	0.00	2009	0.00	2009
1.15	MAX	-6.02	200	12.54	212	0.00	2009	0.00	2009
	MIN	-11.06	112	6.33	100	0.00	2009	0.00	2009
1.53	MAX	-6.04	200	16.74	212	0.00	2009	0.00	2009
	MIN	-11.48	112	8.77	100	0.00	2009	0.00	2009
1.92	MAX	-6.07	200	20.94	212	0.00	2009	0.00	2009
	MIN	-11.88	112	11.37	100	0.00	2009	0.00	2009
2.30	MAX	-6.10	200	25.42	112	0.00	2009	0.00	2009
	MIN	-12.27	112	13.86	200	0.00	2009	0.00	2009
2.69	MAX	-6.13	200	30.20	112	0.00	2009	0.00	2009
	MIN	-12.65	112	16.21	200	0.00	2009	0.00	2009
3.07	MAX	-6.17	200	35.12	112	0.00	2009	0.00	2009
	MIN	-13.01	112	18.57	200	0.00	2009	0.00	2009
3.45	MAX	-6.21	200	40.18	112	0.00	2009	0.00	2009
	MIN	-13.36	112	20.95	200	0.00	2009	0.00	2009
3.84	MAX	-6.26	200	45.37	112	0.00	2009	0.00	2009
	MIN	-13.70	112	23.34	200	0.00	2009	0.00	2009
4.22	MAX	-6.31	200	50.69	112	0.00	2009	0.00	2009
	MIN	-14.02	112	25.75	200	0.00	2009	0.00	2009
4.60	MAX	-6.36	200	56.13	112	0.00	2009	0.00	2009
	MIN	-14.33	112	28.18	200	0.00	2009	0.00	2009

MAX/MIN FORCE VALUES FOR MEMB 2, AMONGST ALL SECT LOCATIONS

	FY/ FZ	DIST DIST	LD LD	MZ/ MY	DIST DIST	LD LD	FX	DIST	LD
MAX.	-4.83	0.00	100	56.13	4.60	112			
	0.00	0.00	100	0.00	0.00	100	24.18 C	0.00	214
MIN.	-14.33	4.60	112	0.00	0.00	2009			
	0.00	4.60	2009	0.00	4.60	2009	13.64 C	4.60	200

********** END OF FORCE ENVELOPE FROM INTERNAL STORAGE **********

```
478. LOAD LIST 300 TO 315 400 TO 415 3000 TO 3009 4000 TO 4009
479. PRINT FORCE ENVELOPE NSECTION 4 LIST 3 6
```

MEMBER FORCE ENVELOPE

ALL UNITS ARE KIP FEET

MEMB	DISTANCE		FY	LD	MZ	LD	FZ	LD	MY	LD
3	0.00	MAX	14.26	410	32.77	314	0.00	4009	0.00	4009
		MIN	8.63	304	15.18	4000	0.00	4009	0.00	4009
	0.75	MAX	13.91	410	24.57	315	0.00	4009	0.00	4009
		MIN	7.53	3000	7.21	4002	0.00	4009	0.00	4009
	1.50	MAX	13.56	410	16.68	3009	0.00	4009	0.00	4009
		MIN	7.18	3000	-2.51	4002	0.00	4009	0.00	4009
	2.26	MAX	12.56	411	9.66	3009	0.00	4009	0.00	4009
		MIN	6.83	3000	-11.18	4002	0.00	4009	0.00	4009
	3.01	MAX	12.21	411	2.90	3009	0.00	4009	0.00	4009
		MIN	6.24	3001	-18.10	4002	0.00	4009	0.00	4009
	3.76	MAX	11.87	411	-3.61	3009	0.00	4009	0.00	4009
		MIN	5.90	3001	-25.25	4003	0.00	4009	0.00	4009
	4.51	MAX	11.54	411	-9.86	3009	0.00	4009	0.00	4009
		MIN	5.56	3001	-33.57	4003	0.00	4009	0.00	4009
	5.27	MAX	10.59	412	-15.21	300	0.00	4009	0.00	4009
		MIN	5.23	3001	-40.83	4003	0.00	4009	0.00	4009
	6.02	MAX	10.26	412	-19.25	300	0.00	4009	0.00	4009
		MIN	4.41	3002	-46.37	4003	0.00	4009	0.00	4009
	6.77	MAX	9.93	412	-23.04	300	0.00	4009	0.00	4009
		MIN	4.08	3002	-52.03	4004	0.00	4009	0.00	4009
	7.52	MAX	9.61	412	-26.59	300	0.00	4009	0.00	4009
		MIN	3.76	3002	-59.05	4004	0.00	4009	0.00	4009
	8.28	MAX	8.77	413	-29.90	300	0.00	4009	0.00	4009
		MIN	3.45	3002	-65.00	4004	0.00	4009	0.00	4009
	9.03	MAX	8.46	413	-32.98	300	0.00	4009	0.00	4009
		MIN	2.65	3003	-69.27	4004	0.00	4009	0.00	4009

MAX/MIN FORCE VALUES FOR MEMB 3, AMONGST ALL SECT LOCATIONS

	FY/ FZ	DIST DIST	LD LD	MZ/ MY	DIST DIST	LD LD	FX	DIST	LD
MAX.	14.26	0.00	410	32.77	0.00	314			
	0.00	0.00	300	0.00	0.00	300	13.34 C	0.00	313
MIN.	2.65	9.03	3003	-69.27	9.03	4004			
	0.00	9.03	4009	0.00	9.03	4009	6.81 C	9.03	400

6	0.00	MAX	12.38	414	32.91	312	0.00	4009	0.00	4009
		MIN	7.99	300	17.76	400	0.00	4009	0.00	4009
	0.75	MAX	12.03	414	24.74	312	0.00	4009	0.00	4009
		MIN	7.63	300	11.70	400	0.00	4009	0.00	4009

1.50	MAX	11.67	414	16.88	3006	0.00	4009	0.00	4009
	MIN	7.28	300	5.90	400	0.00	4009	0.00	4009
2.26	MAX	10.97	415	10.14	3006	0.00	4009	0.00	4009
	MIN	6.93	300	0.37	400	0.00	4009	0.00	4009
3.01	MAX	10.62	415	3.88	3005	0.00	4009	0.00	4009
	MIN	6.59	300	-5.42	415	0.00	4009	0.00	4009
3.76	MAX	10.28	415	-2.04	3004	0.00	4009	0.00	4009
	MIN	6.25	300	-13.29	415	0.00	4009	0.00	4009
4.51	MAX	9.95	415	-7.49	3004	0.00	4009	0.00	4009
	MIN	5.91	300	-20.90	415	0.00	4009	0.00	4009
5.27	MAX	9.61	415	-12.68	3004	0.00	4009	0.00	4009
	MIN	5.58	300	-28.25	415	0.00	4009	0.00	4009
6.02	MAX	9.28	415	-17.44	3003	0.00	4009	0.00	4009
	MIN	5.25	300	-35.36	415	0.00	4009	0.00	4009
6.77	MAX	8.96	415	-21.84	3002	0.00	4009	0.00	4009
	MIN	4.92	300	-42.23	415	0.00	4009	0.00	4009
7.52	MAX	8.64	415	-25.82	3002	0.00	4009	0.00	4009
	MIN	4.60	300	-48.85	415	0.00	4009	0.00	4009
8.28	MAX	8.32	415	-29.32	3000	0.00	4009	0.00	4009
	MIN	4.29	300	-55.23	415	0.00	4009	0.00	4009
9.03	MAX	8.01	415	-32.44	300	0.00	4009	0.00	4009
	MIN	3.97	300	-61.37	415	0.00	4009	0.00	4009

MAX/MIN FORCE VALUES FOR MEMB 6, AMONGST ALL SECT LOCATIONS

	FY/ FZ	DIST DIST	LD LD	MZ/ MY	DIST DIST	LD LD	FX	DIST	LD
MAX.	12.38	0.00	414	32.91	0.00	312			
	0.00	0.00	300	0.00	0.00	300	13.35 C	0.00	314
MIN.	3.97	9.03	300	-61.37	9.03	415			
	0.00	9.03	4009	0.00	9.03	4009	6.81 C	9.03	400

********** END OF FORCE ENVELOPE FROM INTERNAL STORAGE **********

```
480. LOAD LIST 300 TO 315 400 TO 415 3000 TO 3009 4000 TO 4009
481. PRINT FORCE ENVELOPE NSECTION 4 LIST 4 5
```

MEMBER FORCE ENVELOPE

ALL UNITS ARE KIP FEET

MEMB	DISTANCE		FY	LD	MZ	LD	FZ	LD	MY	LD
4	0.00	MAX	9.74	413	-32.98	300	0.00	4009	0.00	4009
		MIN	3.91	4003	-69.27	4004	0.00	4009	0.00	4009
	1.00	MAX	9.33	413	-37.76	300	0.00	4009	0.00	4009
		MIN	3.49	4003	-76.11	4005	0.00	4009	0.00	4009
	2.00	MAX	8.31	414	-42.12	300	0.00	4009	0.00	4009
		MIN	3.07	4003	-81.86	4005	0.00	4009	0.00	4009
	3.00	MAX	7.89	414	-46.06	300	0.00	4009	0.00	4009
		MIN	2.30	4004	-87.07	4005	0.00	4009	0.00	4009
	4.00	MAX	7.47	414	-49.59	300	0.00	4009	0.00	4009
		MIN	1.89	4004	-93.41	4006	0.00	4009	0.00	4009
	5.00	MAX	6.46	415	-52.69	300	0.00	4009	0.00	4009
		MIN	1.47	4004	-97.49	4006	0.00	4009	0.00	4009
	6.00	MAX	6.04	415	-55.38	300	0.00	4009	0.00	4009
		MIN	0.70	4005	-101.03	4006	0.00	4009	0.00	4009
	7.00	MAX	5.62	415	-57.66	300	0.00	4009	0.00	4009
		MIN	0.28	4005	-105.11	4007	0.00	4009	0.00	4009
	8.00	MAX	4.71	4008	-59.51	300	0.00	4009	0.00	4009
		MIN	-0.14	4005	-107.53	4007	0.00	4009	0.00	4009
	9.00	MAX	4.30	4008	-60.95	300	0.00	4009	0.00	4009
		MIN	-0.97	4006	-109.40	4007	0.00	4009	0.00	4009
	10.00	MAX	3.88	4008	-61.97	300	0.00	4009	0.00	4009
		MIN	-1.39	4006	-111.24	4008	0.00	4009	0.00	4009
	11.00	MAX	3.05	4009	-62.58	300	0.00	4009	0.00	4009
		MIN	-1.80	4006	-111.98	4008	0.00	4009	0.00	4009
	12.00	MAX	2.63	4009	-62.76	300	0.00	4009	0.00	4009
		MIN	-2.64	4007	-113.28	412	0.00	4009	0.00	4009

MAX/MIN FORCE VALUES FOR MEMB 4, AMONGST ALL SECT LOCATIONS

	FY/ FZ	DIST DIST	LD LD	MZ/ MY	DIST DIST	LD LD	FX	DIST	LD
MAX.	9.74	0.00	313	-32.98	0.00	300			
	0.00	0.00	300	0.00	0.00	300	11.75 C	0.00	314
MIN.	-2.64	12.00	4007	-113.28	12.00	412			
	0.00	12.00	4009	0.00	12.00	4009	6.24 C	12.00	400

5	0.00	MAX	9.27	415	-32.44	300	0.00	4009	0.00	4009
		MIN	5.03	400	-61.37	415	0.00	4009	0.00	4009
	1.00	MAX	8.85	415	-37.27	300	0.00	4009	0.00	4009
		MIN	4.61	400	-70.43	415	0.00	4009	0.00	4009

2.00	MAX	8.44	415	-41.67	300	0.00	4009	0.00	4009
	MIN	4.20	400	-79.07	415	0.00	4009	0.00	4009
3.00	MAX	7.42	414	-45.66	300	0.00	4009	0.00	4009
	MIN	3.78	400	-87.15	415	0.00	4009	0.00	4009
4.00	MAX	7.00	414	-49.23	300	0.00	4009	0.00	4009
	MIN	3.36	400	-91.06	415	0.00	4009	0.00	4009
5.00	MAX	6.59	414	-52.38	300	0.00	4009	0.00	4009
	MIN	2.94	400	-95.64	414	0.00	4009	0.00	4009
6.00	MAX	5.98	4009	-55.12	300	0.00	4009	0.00	4009
	MIN	2.27	414	-101.86	414	0.00	4009	0.00	4009
7.00	MAX	5.15	413	-57.44	300	0.00	4009	0.00	4009
	MIN	1.85	414	-105.20	4009	0.00	4009	0.00	4009
8.00	MAX	4.74	413	-59.34	300	0.00	4009	0.00	4009
	MIN	1.43	414	-107.50	4009	0.00	4009	0.00	4009
9.00	MAX	4.31	4008	-60.82	300	0.00	4009	0.00	4009
	MIN	0.42	413	-110.17	413	0.00	4009	0.00	4009
10.00	MAX	3.47	4007	-61.88	300	0.00	4009	0.00	4009
	MIN	0.00	413	-111.34	4008	0.00	4009	0.00	4009
11.00	MAX	3.06	4007	-62.53	300	0.00	4009	0.00	4009
	MIN	-2.21	4009	-111.97	4008	0.00	4009	0.00	4009
12.00	MAX	2.64	4007	-62.76	300	0.00	4009	0.00	4009
	MIN	-2.63	4009	-113.28	412	0.00	4009	0.00	4009

MAX/MIN FORCE VALUES FOR MEMB 5, AMONGST ALL SECT LOCATIONS

	FY/ FZ	DIST DIST	LD LD	MZ/ MY	DIST DIST	LD LD	FX	DIST	LD
MAX.	9.27	0.00	315	-32.44	0.00	300			
	0.00	0.00	300	0.00	0.00	300	11.75 C	0.00	314
MIN.	-2.63	12.00	4009	-113.28	12.00	412			
	0.00	12.00	4009	0.00	12.00	4009	6.24 C	12.00	400

********** END OF FORCE ENVELOPE FROM INTERNAL STORAGE **********

482. LOAD LIST 300 TO 315 400 TO 415 3000 TO 3009 4000 TO 4009
483. PRINT FORCE ENVELOPE NSECTION 4 LIST 1 2

MEMBER FORCE ENVELOPE

ALL UNITS ARE KIP FEET

MEMB	DISTANCE		FY	LD	MZ	LD	FZ	LD	MY	LD
1	0.00	MAX	-3.19	3000	0.00	4009	0.00	4009	0.00	4009
		MIN	-7.15	414	0.00	4009	0.00	4009	0.00	4009
	0.38	MAX	-3.50	3000	2.74	414	0.00	4009	0.00	4009
		MIN	-7.15	414	1.28	3000	0.00	4009	0.00	4009
	0.77	MAX	-3.80	3000	5.49	414	0.00	4009	0.00	4009
		MIN	-7.16	414	2.69	3000	0.00	4009	0.00	4009
	1.15	MAX	-3.97	4000	8.24	414	0.00	4009	0.00	4009
		MIN	-7.29	314	4.20	3000	0.00	4009	0.00	4009
	1.53	MAX	-3.99	4000	11.00	414	0.00	4009	0.00	4009
		MIN	-7.57	314	5.82	3000	0.00	4009	0.00	4009
	1.92	MAX	-4.01	4000	13.77	414	0.00	4009	0.00	4009
		MIN	-7.84	314	7.54	3000	0.00	4009	0.00	4009
	2.30	MAX	-4.04	4000	16.76	314	0.00	4009	0.00	4009
		MIN	-8.10	314	9.15	4000	0.00	4009	0.00	4009
	2.69	MAX	-4.07	4000	19.91	314	0.00	4009	0.00	4009
		MIN	-8.34	314	10.71	4000	0.00	4009	0.00	4009
	3.07	MAX	-4.10	4000	23.16	314	0.00	4009	0.00	4009
		MIN	-8.58	314	12.27	4000	0.00	4009	0.00	4009
	3.45	MAX	-4.14	4000	26.49	314	0.00	4009	0.00	4009
		MIN	-8.81	314	13.85	4000	0.00	4009	0.00	4009
	3.84	MAX	-4.18	4000	29.92	314	0.00	4009	0.00	4009
		MIN	-9.03	314	15.45	4000	0.00	4009	0.00	4009
	4.22	MAX	-4.22	4000	33.42	314	0.00	4009	0.00	4009
		MIN	-9.24	314	17.06	4000	0.00	4009	0.00	4009
	4.60	MAX	-4.27	4000	37.01	314	0.00	4009	0.00	4009
		MIN	-9.44	314	18.69	4000	0.00	4009	0.00	4009

MAX/MIN FORCE VALUES FOR MEMB 1, AMONGST ALL SECT LOCATIONS

	FY/ FZ	DIST DIST	LD LD	MZ/ MY	DIST DIST	LD LD	FX	DIST	LD
MAX.	-3.19	0.00	3000	37.01	4.60	314			
	0.00	0.00	300	0.00	0.00	300	17.92 C	0.00	410
MIN.	-9.44	4.60	314	0.00	0.00	4009			
	0.00	4.60	4009	0.00	4.60	4009	10.71 C	4.60	404

2	0.00	MAX	-3.59	300	0.00	4009	0.00	4009	0.00	4009
		MIN	-7.14	412	0.00	4009	0.00	4009	0.00	4009
	0.38	MAX	-3.90	300	2.74	412	0.00	4009	0.00	4009
		MIN	-7.15	412	1.44	300	0.00	4009	0.00	4009

0.77	MAX	-4.20	300	5.49	412	0.00	4009	0.00	4009
	MIN	-7.16	412	2.99	300	0.00	4009	0.00	4009
1.15	MAX	-4.37	400	8.24	412	0.00	4009	0.00	4009
	MIN	-7.29	312	4.66	300	0.00	4009	0.00	4009
1.53	MAX	-4.39	400	10.99	412	0.00	4009	0.00	4009
	MIN	-7.57	312	6.43	300	0.00	4009	0.00	4009
1.92	MAX	-4.41	400	13.76	412	0.00	4009	0.00	4009
	MIN	-7.83	312	8.31	300	0.00	4009	0.00	4009
2.30	MAX	-4.44	400	16.75	312	0.00	4009	0.00	4009
	MIN	-8.09	312	10.07	400	0.00	4009	0.00	4009
2.69	MAX	-4.47	400	19.90	312	0.00	4009	0.00	4009
	MIN	-8.34	312	11.78	400	0.00	4009	0.00	4009
3.07	MAX	-4.50	400	23.14	312	0.00	4009	0.00	4009
	MIN	-8.58	312	13.50	400	0.00	4009	0.00	4009
3.45	MAX	-4.54	400	26.48	312	0.00	4009	0.00	4009
	MIN	-8.81	312	15.24	400	0.00	4009	0.00	4009
3.84	MAX	-4.58	400	29.90	312	0.00	4009	0.00	4009
	MIN	-9.03	312	16.98	400	0.00	4009	0.00	4009
4.22	MAX	-4.62	400	33.41	312	0.00	4009	0.00	4009
	MIN	-9.24	312	18.75	400	0.00	4009	0.00	4009
4.60	MAX	-4.67	400	36.99	312	0.00	4009	0.00	4009
	MIN	-9.44	312	20.53	400	0.00	4009	0.00	4009

MAX/MIN FORCE VALUES FOR MEMB 2, AMONGST ALL SECT LOCATIONS

	FY/ FZ	DIST DIST	LD LD	MZ/ MY	DIST DIST	LD LD	FX	DIST	LD
MAX.	-3.59	0.00	300	36.99	4.60	312			
	0.00	0.00	300	0.00	0.00	300	16.30 C	0.00	414
MIN.	-9.44	4.60	312	0.00	0.00	4009			
	0.00	4.60	4009	0.00	4.60	4009	9.97 C	4.60	400

********** END OF FORCE ENVELOPE FROM INTERNAL STORAGE **********

484. ***
485. FINISH

```
*********** END OF THE STAAD.Pro RUN ***********

  **** DATE= APR  7,2016   TIME= 11:31:23 ****

************************************************************
*   For technical assistance on STAAD.Pro, please visit    *
*   http://selectservices.bentley.com/en-US/               *
*                                                          *
*   Details about additional assistance from               *
*   Bentley and Partners can be found at program menu      *
*   Help->Technical Support                                *
*                                                          *
*      Copyright (c) 1997-2014 Bentley Systems, Inc.
*                http://www.bentley.com                    *
************************************************************
```

Software licensed to Hewlett-Packard Company	Job No	Sheet No 1	Rev
	Part		
Job Title	Ref		
	By BK	Date 12/22/15	Chd
Client	File 42.42ft x 5ft-HL93-Spring	Date/Time 07-Apr-2016 11:31	

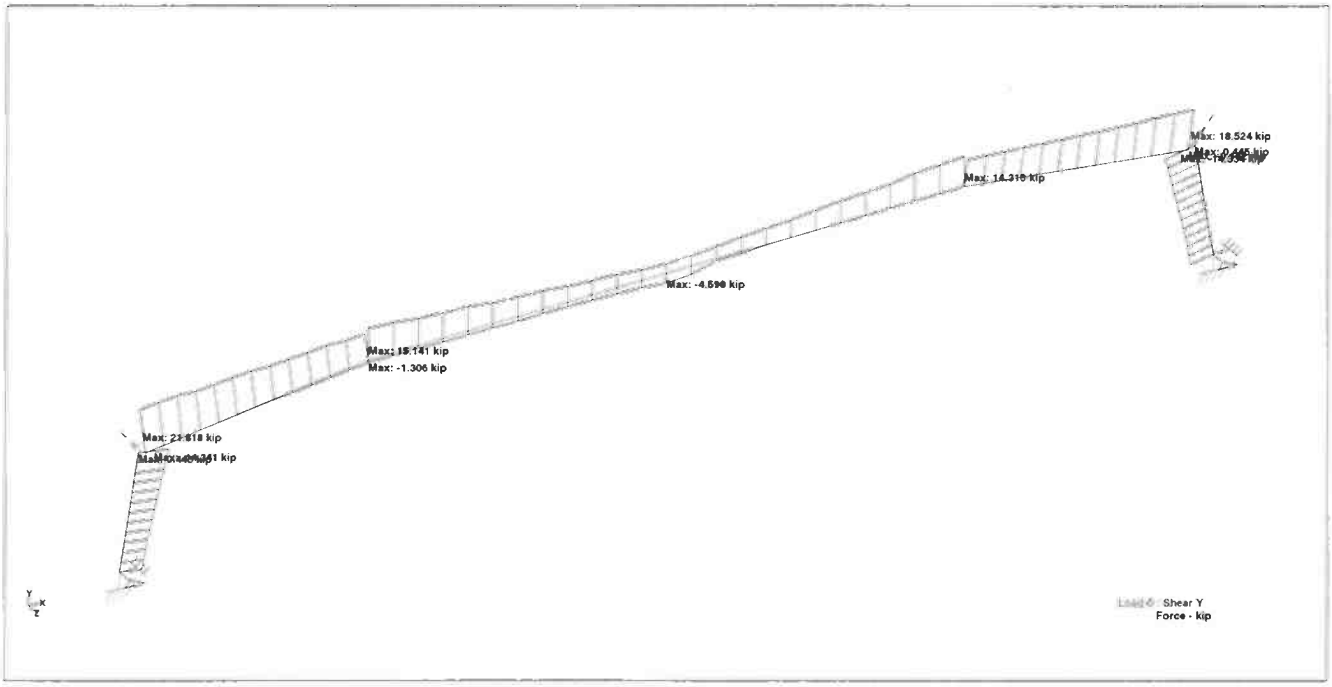

Whole Structure Fy 12kip:1ft 0 Envelope

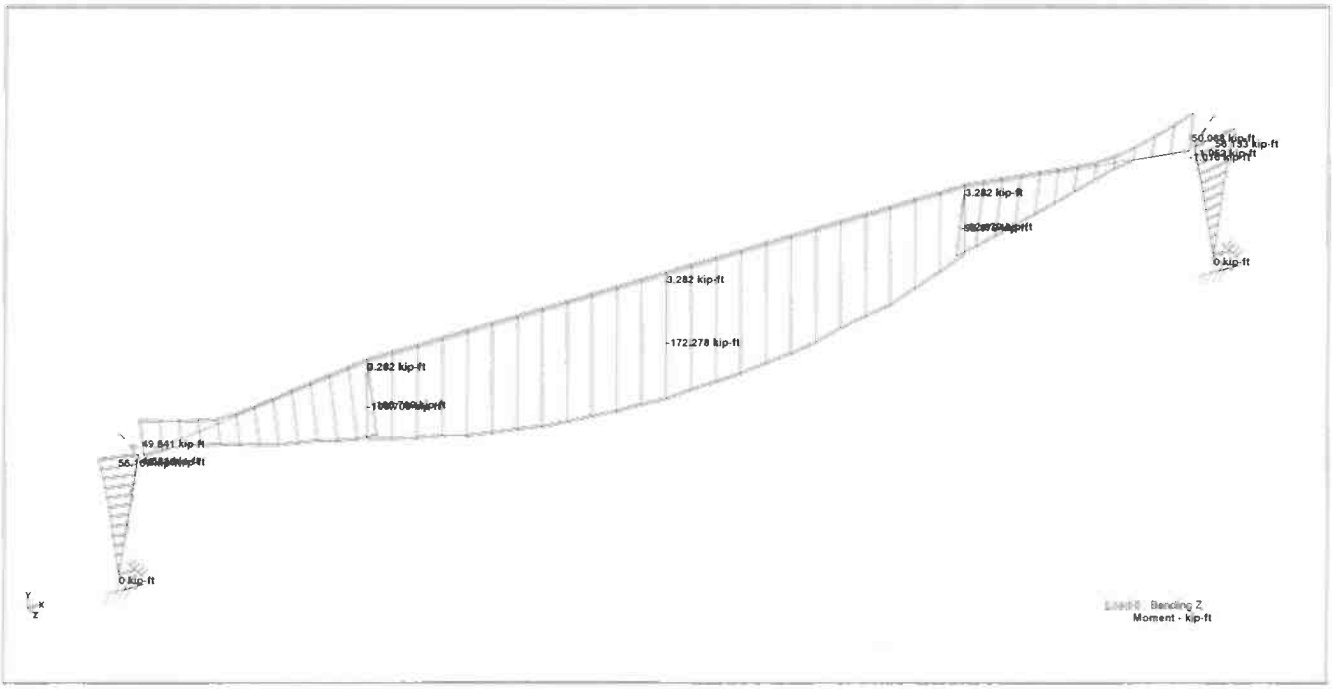

Whole Structure Mz 35kip-ft:1ft 0 Envelope

Section 5
CSI Wing wall 1
Calculations

Concrete Systems Inc.
9 Commercial St., Hudson, NH,03051
Phone 603-889-4163
Fax 603-889-2417

AASHTO LRFD WINGWALL CALCULATIONS

PROJECT NUMBER: R22624
PROJECT NAME: ROUTE 106 BRIDGE REPLACEMENT T. H. 61 (KENDALL ROAD)
DATE: Feb 25, 2016
BY: BK

WW 1

INPUT PARAMETERS:

Wall geometry

Panel Height (high) = **7.58 ft**
Panel Height (low) = **7.00 ft**
Wall Panel Length = **8.00 ft**
Entire Wall length = **8.00 ft**
Length of flat = **1.00 ft**
wall thickness = **12**
Wingwall Drop *(high-low)* = 0.58 ft
Wall slope = 0.0829
Max fill ht. *(t/road to b/ww)* = **9.58 ft**
Fill Slope *(perp. to road)* = **2.0**
Wall angle *(perp. to road)* = **68**
Fill slope *(perp. to wall)* = 2.16
Wingwall Panel Connected to Bridge Unit= ☑ Yes

Soil properties

γ_{soil} = **140 pcf**
γ_{conc} = **150 pcf**
$\gamma_{LLsurcharge}$ = **120 pcf**
ϕ_{AB} = **32**
θ_{AB} = **0**
δ_{AB} = **24**
ϕ_{BC} = **32**
θ_{BC} = **30**
δ_{BC} = **16**

Foundation

D_{ftg} = **5.0 ft**
B_{ftg} = **2.5 ft**
o = **9 in**
Q_{soil} = **3.0 KSF**

Railing or barrier

NONE

T/WW to load = **2.00 ft**
impact load = **10.00 K**

	Distance to anchor	Overriding perp. slope @ anchor	Wall height @ anchor	Contrib. width	Perp. slope used @ anchor	h_{eq} LL surch	Anchor Type	Check 'e' & Bearing
Anchor #1	**2.50 ft**	**n**	7.21 ft	5.25 ft	3.04 ft	**2.00 ft**	**C**	*OK*
Anchor #2	**0.00 ft**	**n**	0.00 ft	0.00 ft	2.16 ft	**2.00 ft**	**E**	*N/A*
Anchor #3	**0.00 ft**	**n**	0.00 ft	0.00 ft	2.16 ft	**2.00 ft**	**E**	*N/A*
Anchor #4	**0.00 ft**	**n**	0.00 ft	0.00 ft	2.16 ft	**2.00 ft**	**E**	*N/A*
Anchor #5	**0.00 ft**	**n**	0.00 ft	0.00 ft	2.16 ft	**2.00 ft**	**E**	*N/A*

CALCULATION NOTES:

1. Wingwall calculations are done in accordance with the current edition of the *AASHTO LRFD Bridge Design Specifications* .
2. Moments are summed about the *toe (face) of the wingwall* (point "o" on attached "Pressure Diagram").
3. K_a is calculated using equation found in former AASHTO LRFD Specifications Equation 3.11.5.3-1

$$K_a = \frac{\sin^2(\phi+\theta)}{\sin^2\theta\sin(\theta-\delta)\left[1+\sqrt{\frac{\sin(\phi+\delta)\sin(\phi-\beta)}{\sin(\theta-\delta)\sin(\theta+\beta)}}\right]^2}$$

4. Only 80% of the soil unit weight is used for the eccentricity/ stability calculation. This is a conservative assumption as explained in the full HITEC report "Evaluation of the CON/SPAN® Wingwall System"
5. The full 100% of the soil unit weight is used for the bearing calculations.
6. These calculations conservatively assume that the wall anchor has the same unit weight as soil.
7. The wingwall angle (in plan view) is measured from perpendicular to roadway.
8. Barrier loads are distributed per AASHTO LRFD Specifications Section 13

Anchor 1			
SOIL PROPERTY	DESCRIPTION	VALUE section AB	VALUE section BC
ϕ	friction angle of soil	32	32
θ	angle of wall to the y-axis	0	30
δ	wall-soil friction angle *(measured from a perpendicular with the wall)* =0, if significant vibrations of backfill or modules settling more than backfill. = 0.5*ϕ, if modules are uniform width. = 0.75*ϕ, if averaged pressure surface	24	16
x	side slopes from road (x:1)	2.0	
α	wingwall angle (angle w/ perpendicular to road)	68	
	slope of backfill (perpendicular to wall)	3.04	
β	angle of backfill (perpendicular to wall)	18.2	18.2
	$(K_a)_{AB}$ =	0.36	$(K_a)_{BC}$ = 0.13

Anchor 1

VARIABLE	DESCRIPTION OF VARIABLE	VALUE	
H	wingwall design height at anchor location (feet)	7.21	
h_{surch}	height of live load surcharge (feet)	2.00	
t	thickness of wingwall (inches)	12	
δ	wall friction angle for section AB	24	
β	angle of backfill (degrees)	18.2	
L	length of anchor (feet)	5.04	C
γ_s	unit weight of backfill (kcf)	140	
γ_c	unit weight of concrete (kcf)	150	
γ_{surch}	unit weight of surcharge (kcf)	120	*(per AASHTO LRFD 3.11.6.4)*

Description	Vertical Reaction (k/ft)	Horizontal Reaction (k/ft)	Lever Arm (ft)	Disturbing Moment (ft-k/ft)	"Stability" Resisting Moment (ft-k/ft)	"Bearing" Resisting Moment (ft-k/ft)
wall (W_w)	1.08		0.50		0.54	0.54
soil I_A	0.59		4.36		2.04	2.55
soil I_B	2.62		3.52		7.37	9.21
soil II_A	1.10		2.13		1.87	2.34
soil II_B	0.68		4.02		2.20	2.75
$W_{surcharge(vert)}$	1.21		3.52		4.26	4.26
$W_{parapet}$	0.00		0.50		0.00	0.00
Soil Pressure						
$(P_{AB})_v$	0.30		6.04		1.79	1.79
$(P_{AB})_h$		0.66	5.29	3.52		
$(P_{BC1})_v$	-0.11		4.89		-0.54	-0.54
$(P_{BC1})_h$		0.44	1.50	0.66		
$(P_{BC2})_v$	-0.04		4.50		-0.18	-0.18
$(P_{BC2})_h$		0.16	0.83	0.14		
$P_{surcharch(hor)}$		0.57	4.43	2.53		
TOTALS =	7.42	1.84		6.84	19.35	22.72

AASHTO LRFD C11.6.3.3 states: The specified criteria for the location of the resultant, coupled with investigation of the bearing pressure, replaces the investigation of the ratio of stabilizing moment to overturning moment. See Section III Soil Bearing Pressure.

II. CHECK OVERTURNING STABILITY AT CONNECTION PLATES

The connection plates provide stability for the portion of the wall not supported by the anchors, i.e., the section closest to the culvert. (See wingwall sketch)

Data:

number of plates = 2

ϕ = 32

δ = 24

γ_s = 0.140 kcf

$\gamma_{(surcharge)}$ = 0.120 kcf

wall height @ plates (H) = **7.58 ft**

Live load surcharge (h) = **2.00 ft**

section width for plates (S) = 2.8 ft

y_{Psh} = H/3 = 2.5 ft

y_{PLL} = H/2 = 3.8 ft

y_{p1} = **0.75 ft**

y_{p2} = **4.75 ft**

A_{bolt} = 0.79

t_{plate} = 1.00 in

$\phi F_{(bolt)}$ = 30 ksi

$F_{y(plate)}$ = 36 ksi

Find soil pressure on section:

Because the wall is more rigid at the plates, at-rest soil pressure coefficient (K_o) is used.

$K_o = 1-\sin\phi = 0.47$ *(AASHTO LRFD eq. 3.11.5.2-1)*

$P_{sh} = (^1/_2)\gamma_s K_o H^2(S)(\cos\delta) = 4.75$ K

$P_{LLh} = K_o\gamma_s HhS(\cos\delta) = 2.15$ K

$P_{impact} = P_{imp}S/L_{distr} = 0$

Find reaction at plate:

Sum moments about bottom plate, p_1

$\Sigma M_{p1} = 0 = P_{sh}(y_{Psh} - y_{p1}) - p_2(y_{p2} - y_{p1})$ *(dead load)*

$\Sigma M_{p1} = 0 = P_{LL}(y_{PLL} - y_{p1}) - p_{2LL}(y_{p2} - y_{p1}) + P_{imp}(y_{imp} - y_{p1}$ *(live load)*

$p_2 = \dfrac{P_{sh}(y_{Psh} - y_{p1})}{(y_{p2} - y_{p1})} = 2.11$ K $\qquad p_1 = P_{sh} - p_2 = 2.64$ K

$p_{2LL} = \dfrac{P_{LLh}(y_{pLL} - y_{p1}) + P_{imp}(y_{imp} - y_{p1})}{(y_{p2} - y_{p1})} = 1.63$ K $\qquad p_{1LL} = P_{LL} + P_{imp} - p_{2LL} = 0.52$ K

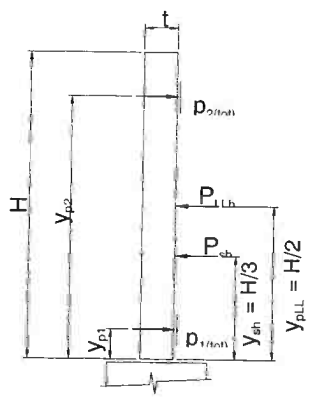

Find factored reaction:

Load factors are per AASHTO LRFD 3.4.1-1 & Table 3.4.1-2

$p_{fac} = \gamma p_{max(DL)} + (1.75)p_{max(LL)}$

$p_{fac} = (1.35)p_{(DL)} + (1.75)p_{(LL)}$

$p_{1(tot,\ factored)}$ = 4.47 K

$p_{2(tot,\ factored)}$ = 5.71 K ***Controls***

$p_{(max,\ factored)}$ = 5.71 K

Check bolts:

The special Richmond Screw Anchor *"wingwall insert" pullout capacity was obtained from the manufacturer and has approx. 3:1 safety factor.*

Pullout capacity = 16.5 k/bolt ***Controls***

Bolt tension = $\phi F A_{bolt}$ = 23.7 k/bolt

$F.S. = \dfrac{\text{Capacity* 2 bolts}}{(p_{fac})} = 5.78$ *> 1.0, OK*

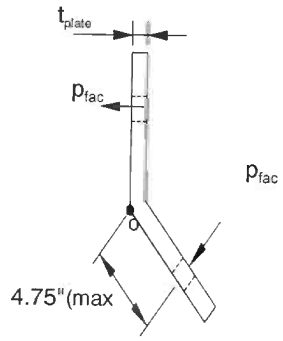

Check bending of plate:

Sum moments about corner of plate, point "o"

$\Sigma M_o = (p_{fac})(4.75") = 27101$ lb-in

$I_{pl} = bh^3/12 = 0.83$ in^4

$\sigma_{max} = \dfrac{My}{I_{pl}} = 16$ ksi $\quad < \phi F_y = 0.9F_y$ *OK*

(AISC LRFD-F2 states ϕ_b = 0.9)

length of connection plate is 10"

III. CHECK SOIL BEARING PRESSURE AND SLIDING UNDER CAST-IN-PLACE FOOTING

The reaction will be supported on the horizontal portion of the anchor plus the footing.

R_v = Total vertical reaction at anchor (using 100% of soil weight).

R_h = Total horizontal reaction at anchor.

M_D = Disturbing moment at anchor.

M_{Rb} = Resisting moment due to 100% of soil at anchor.

Summary of loads at anchors

anchor	anchor base length	R_v ($^K/_F$)	R_h ($^K/_F$)	M_D ($^{K\text{-}F}/_F$)	M_{Rb} ($^{K\text{-}F}/_F$)
1	2.73	7.42	1.84	6.84	22.72
2	4.73	0.00	0.00	0.00	0.00
3	4.73	0.00	0.00	0.00	0.00
4	4.73	0.00	0.00	0.00	0.00
5	4.73	0.00	0.00	0.00	0.00

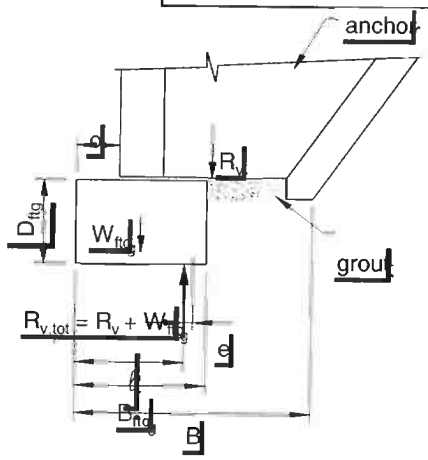

Check the bearing pressure under the wall

D_{ftg} = 5.0 ft

B_{ftg} = 2.5 ft

o = 9 in

W_{ftg} = 1.88 klf

Q_{allow} = 3.0 KSF

$R_{v,tot}$ = total vertical reaction ($R_v + W_{ftg}$)

B = bearing width

= maximum of (anchor base length + o) or B_{ftg}

ℓ = location of vertical resultant ($R_{v,tot}$) along bearing width

$$= \frac{R_v((M_{Rb}-M_D)/R_v + o) + W_{ftg}(B/2)}{R_{v,tot}}$$

e = eccentricity of resultant

= B/2 - ℓ

B' = adjusted bearing width

= B - 2e

q = bearing pressure *(must be less than Q_{allow})*

= $R_{v,tot}$ / B'

Check bearing pressure at each anchor

anchor	B (ft)	ℓ (ft)	e	check e	B' (ft)	q	check q
1	4.48	2.56	-0.32	*OK*	3.84	2.42	*OK*
2	0.00	0.00	0.00	*n/a*	0.00	0.00	*n/a*
3	0.00	0.00	0.00	*n/a*	0.00	0.00	*n/a*
4	0.00	0.00	0.00	*n/a*	0.00	0.00	*n/a*
5	0.00	0.00	0.00	*n/a*	0.00	0.00	*n/a*

Check the sliding factor of safety

$R_R = \phi * R_{V,tot} * .8 * \tan \phi$ *(AASHTO LRFD 10.6.3.4)*

(must be $> R_h$)

$\phi =$ 0.9 *from AASHTO LRFD Table 10.5.5.2.2-1 for precast concrete on sand*

Check sliding at each anchor

anchor	$R_{v,tot}$ (k/f)	R_R (k/f)	R_h	check $R_R > R_h$
1	9.30	4.18	1.84	*OK*
2	0.00	0.00	0.02	*n/a*
3	0.00	0.00	0.02	*n/a*
4	0.00	0.00	0.02	*n/a*
5	0.00	0.00	0.02	*n/a*

IV. CHECK BENDING OF FOOTING CROSS SECTION

Bending need not be considered in footings when the footing depth, D, exceeds the projection, pr, of the footing beyond the edge of the wall.

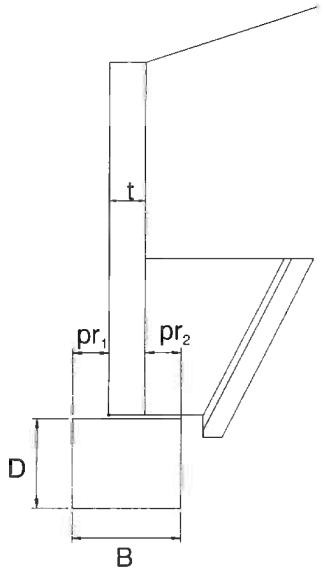

pr_1 = offset(o) = 9 in

pr_2 = B - o - t = 9 in ***Controls***

pr_{max} = 9 in

projection < D *OK*

Use minimal steel stirrups
#4 @ 48 inches o.c.

V. CHECK WALL SECTION - BENDING AND SHEAR (vertical bars)

Assumptions: 1. *Wall stem is cantilevered from anchor.*
2. *Use active earth pressure because wall can deflect at top.*
3. *Use K_a and δ from Anchor Stability Calculations.*

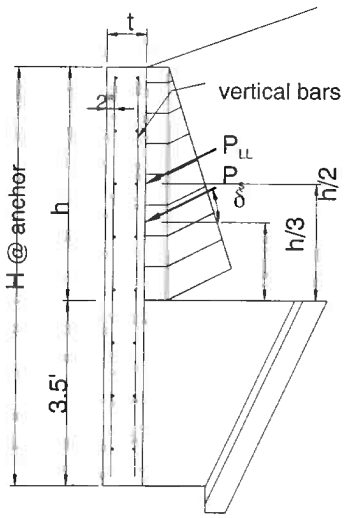

Horizontal loads:

$P_{sh} = (^1/_2)\gamma_s K_a h^2(\cos\delta)$

$P_{LLh} = \gamma_s K_a h(h_{surcharge})(\cos\delta)$

$P_{impact} = P_{imp}/L_{distr}$

Factored forces:

Load factors are per AASHTO LRFD 3.4.1-1 & Table 3.4.1-2

M_u = Section width$[(1.35)P_{sh}(h/3) + (1.75)P_{LLh}(h/2) + (1.75)P_{imp}(h+y_{imp})]$

V_u = Section width$[(1.35)P_{sh} + (1.75P_{LLh} + (1.75P_{imp}]$

Summary of forces at anchors

anchor	H (ft)	h (ft)	$h_{surcharge}$ (ft)	P_{sh} (k/ft)	P_{LLh} (k/ft)	P_{imp} (k/ft)	M_u (k-ft)	V_u (k)
1	7.21	3.71	2.00	0.32	0.29	0.00	7.77	4.94
2	0.00	0.00	2.00	0.00	0.00	0.00	0.00	0.00
3	0.00	0.00	2.00	0.00	0.00	0.00	0.00	0.00
4	0.00	0.00	2.00	0.00	0.00	0.00	0.00	0.00
5	0.00	0.00	2.00	0.00	0.00	0.00	0.00	0.00

Check bending (reinforcment) at anchors

f'_c = **5000 psi**

f_y = **60000 psi**

ϕ_b = **0.9** *(AASHTO LRFD 5.4.2.1)*

$m = f_y/0.85f'_c = 14.12$

d = 9.75 in

b = anchor's contrib. width

$$R_u = \frac{M_u}{\phi_b b d^2}$$

$$\rho_{reqd} = \frac{1}{m}\left(1-\sqrt{1-\frac{2mR_u}{f_y}}\right)$$

ρ_{min} = *AASHTO LRFD 5.7.3.3.2 states the minimum reinforcement is the lesser of 1.2Mcr OR 1.33 times the factored moment required by strength.*

anchor	R_u (psi)	ρ_{reqd}	ρ_{cr}	ρ_{min}	$A_{s\,min}$ (in^2)	$A_{s\,actual}$ (in^2)	check
1	17	0.0003	0.0030	0.0004	0.23	1.08	OK
2	0	0.0000	0.0030	0.0000	0.00	#######	N/A
3	0	0.0000	0.0030	0.0000	0.00	#######	N/A
4	0	0.0000	0.0030	0.0000	0.00	#######	N/A
5	0	0.0000	0.0030	0.0000	0.00	#######	N/A

Check shear

$V_c = (.0316)*\beta \sqrt{f'_c}\, b_v d_v$ *(V_c calculated by AASHTO LRFD eq'n 5.8.3.3-3)*

$\phi = 0.9$ *(AASHTO LRFD 5.5.4.2.1)*

$\beta = 2$ *(AASHTO LRFD 5.8.3.4.1)*

$d_v = .9*d$ or $.72*t$ *whichever is greater (AASHTO LRFD 5.8.2.9)*

anchor	ϕV_c	check $V_u < \phi V_c$
1	70.31	*OK*
2	0.00	*N/A*
3	0.00	*N/A*
4	0.00	*N/A*
5	0.00	*N/A*

VI. CHECK TYPE 'C' ANCHOR ATTACHMENT

Check capacity of connector for pullout (truncated pyramid failure), shear, tension, and combined shear & tension

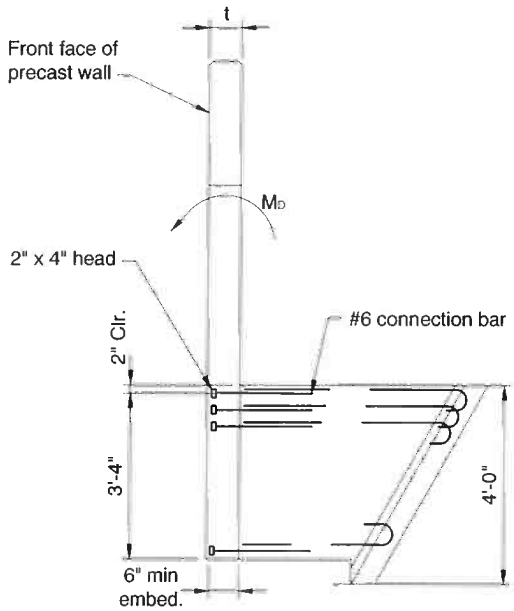

embedment depth (ℓ_e)= **6 in**

Attachment depth = 42 in

X head dimension (Xd_{head}) = 3 in

Y head dimension (Yd_{head}) = 3 in

Bar size = **# 6**

rows = **3**

row spacing = **5 in**

wall thickness (t) = 12 in

$x = Xd_{head}$ (*since only 1 column*) = 3 in

$y = (\#rows-1)(row\ spacing) + Yd_{head}$ = 13 in

$z = \min(x,y)$ = 3 in

$h_{min} = (z + 2\ell_e)/2$ = 7.5 in

$A_R = (x+2\ell_e-2t)(y+2\ell_e-2t)$ = -9.0 in^2

f'_c = **5000 psi**

f_y = **60000 psi**

$\phi_{concrete}$ = 0.85

ϕ_{steel} = 0.90

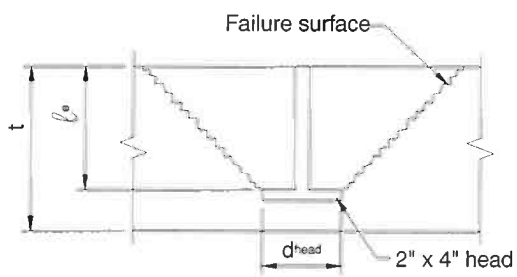

TENSION CAPACITY (Per PCI Design Handbook §6.5.2.1)

t > hmin: failure surface does not penetrate slab

Find pullout capacity of concrete

if $t >= h_{min}$, $\phi P_c = \phi 2.67 sqrt(f'c)(x+2\ell e)(y+2\ell e)$

if $t < h_{min}$, $\phi P_c = \phi 2.67 sqrt(f'c)[(x+2\ell e)(y+2\ell e) - A_R]$

ϕP_c = 60.18 K

controlling tension capacity (ϕP) = 60.18 K

Find tension capacity of studs

$\phi P_y = \phi f_y(A_{bar})(\#bars)$

ϕP_y = 71.57 K

Find moment capacity of anchor

Moment capacity of anchor (ϕM_n) = $\phi P(d-a/2)$

d = attachment depth - bar cover - $(y-Yd_{head})/2$ = 35 in

$a = A_s f_y/0.85 f'_c b$ = 3.12 in

ϕM_n = 167.70 k-f

SHEAR CAPACITY (Per PCI Design Handbook §6.5.2.2)

Find shear capacity of concrete

$\phi V_c = \phi V'_c C_w C_t C_c$

$\phi V'_c = \phi 12.5 d_e^{1.5} \text{sqrt}(f'_c)$	= 187.4 K
C_w = 1 + spacing/3.5d_e < #columns	= 1.0
C_t = t/1.3d_e <= 1.0	= 0.23
C_c = 0.4 + 0.7d_c/de <= 1.0	= 0.9
d_e = attachment depth - cover - bar dia/2	= 40 in
d_c = distance to side of wingwall	= 30 in

$\phi V_c = \phi V'_c C_w C_t C_c$ = 40.60 K

Find shear capacity of studs

$\phi V_y = \phi 0.9 f_y A_{bar}$(#bars)

ϕV_y = 64.41 K

controlling shear capacity (ϕV) = 40.60 K

FIND LOADS

Unfactored loads on anchors:

$M_{D(DL)}$ = (sec width)$M_{D(anchor)}$

$M_{D(LL)}$ = (sec width)($M_{D(anchor)}$ + P_{imp}*(wall ht + y_{imp}))

Factored loads:

Load factors are per AASHTO 3.22.1 & Table 3.22.1A

$M_u = (1.3)(1.3)M_{D(DL)} + (1.3)(1.67)M_{D(LL)}$

$P_u = M_u$ /(d-a/2)*cos(bar angle)

$V_u = M_u$ /(d-a/2)*sin(bar angle)

bar angle = 0°

Summary of forces

anchor	$M_{D(DL)}$ ft-k	$M_{D(LL)}$ ft-k	M_u ft-k	P_u k	V_u k
1	22.6	13.3	67.1	24.1	0.0
2	0.0	0.0	0.0	0.0	0.0
3	0.0	0.0	0.0	0.0	0.0
4	0.0	0.0	0.0	0.0	0.0
5	0.0	0.0	0.0	0.0	0.0

Summary of results

anchor	check $\phi M_n > M_u$	check $\phi P > P_u$	check $\phi V > V_u$	check combined V_c & P_c	check combined V_s & P_s
1	*OK*	*OK*	*OK*	*OK*	*OK*
2	*n/a*	*n/a*	*n/a*	*n/a*	*n/a*
3	*n/a*	*n/a*	*n/a*	*n/a*	*n/a*
4	*n/a*	*n/a*	*n/a*	*n/a*	*n/a*
5	*n/a*	*n/a*	*n/a*	*n/a*	*n/a*

NOTE:

ULTIMATE PULLOUT CAPACITY 33,000 POUNDS IN 3,000 PSI CONCRETE.

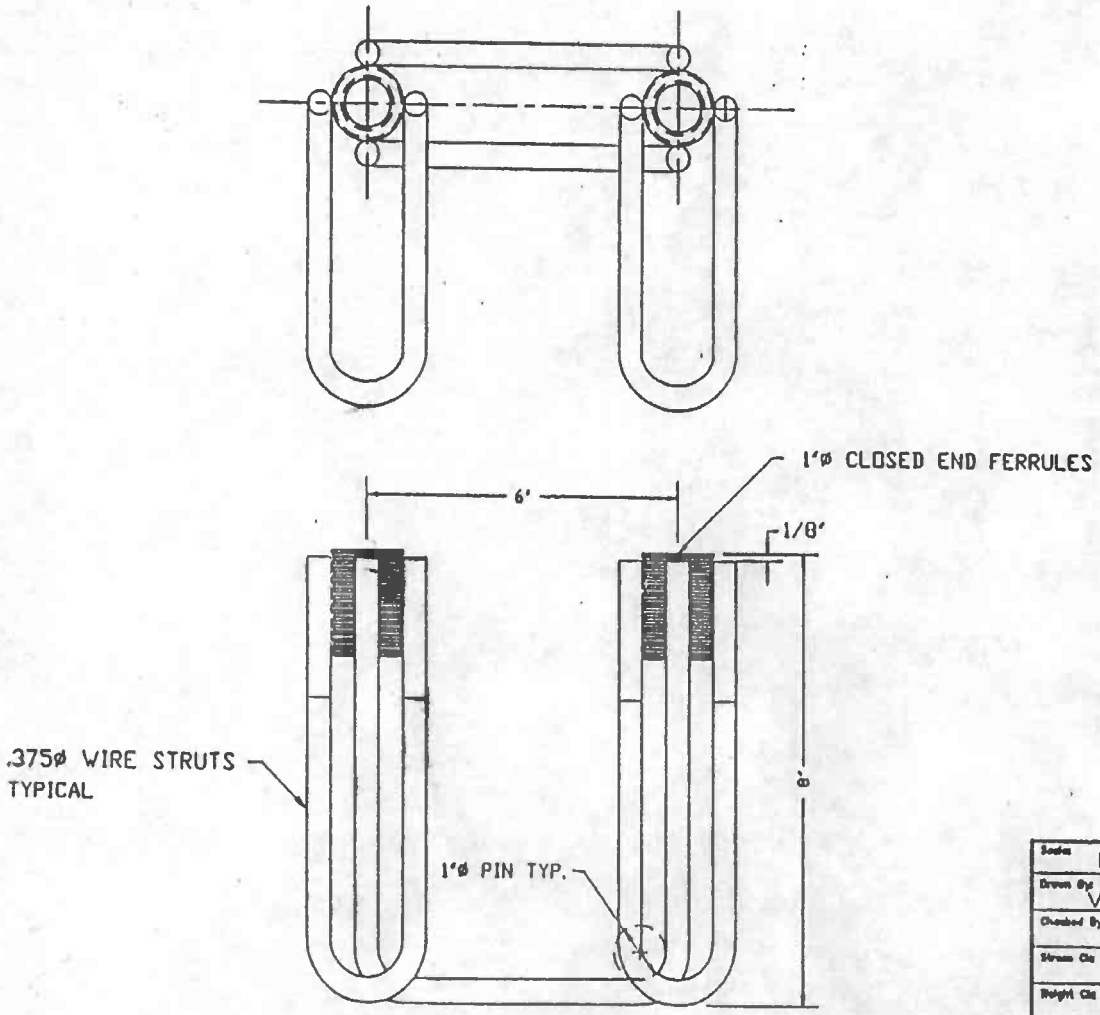

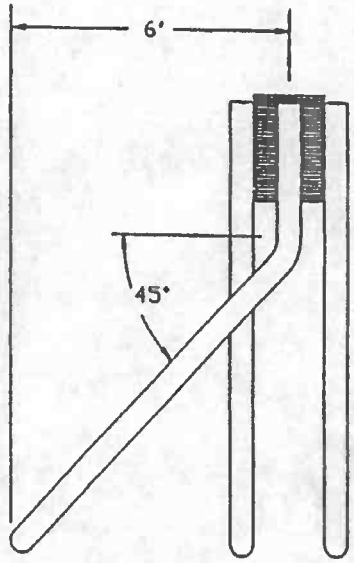

Scale NONE	Date	RICHMOND Screw Anchor Co. 7214 Burns Street Fort Worth, TX 76118
Drawn By VADIM	2/7/90	
Checked By		1'ø TWO BOLT WINGWALL PRESET ANCHOR
Stress Ckt		
Weight Ckt		
Approved		Product Symbol / Drawing No. D-694 / Rel. Date
Customer		

Section 6
CSI Wing wall 2
Calculations

Concrete Systems Inc.
9 Commercial St., Hudson, NH,03051
Phone 603-889-4163
Fax 603-889-2417

AASHTO LRFD WINGWALL CALCULATIONS

PROJECT NUMBER: R22624
PROJECT NAME: ROUTE 106 BRIDGE REPLACEMENT T. H. 61 (KENDALL ROAD)
DATE: Feb 25, 2016
BY: BK

WW 2

INPUT PARAMETERS:

Wall geometry

Panel Height (high) = **8.33 ft**
Panel Height (low) = **5.50 ft**
Wall Panel Length = **8.00 ft**
Entire Wall length = **8.00 ft**
Length of flat = **1.00 ft**
wall thickness = **12**
Wingwall Drop *(high-low)* = 2.83 ft
Wall slope = 0.4043
Max fill ht. *(t/road to b/ww)* = **10.33 ft**
Fill Slope *(perp. to road)* = **1.5**
Wall angle *(perp. to road)* = **0**
Fill slope *(perp. to wall)* = 0.00
Wingwall Panel Connected to Bridge Unit= ☑ Yes

Soil properties

γ_{soil} = **140 pcf**
γ_{conc} = **150 pcf**
$\gamma_{LLsurcharge}$ = **120 pcf**
ϕ_{AB} = **32**
θ_{AB} = **0**
δ_{AB} = **24**
ϕ_{BC} = **32**
θ_{BC} = **30**
δ_{BC} = **16**

Foundation

D_{ftg} = **5.0 ft**
B_{ftg} = **2.5 ft**
o = **9 in**
Q_{soil} = **3.0 KSF**

Railing or barrier

NONE
T/WW to load = **2.00 ft**
impact load = **10.00 K**

	Distance to anchor	Overriding perp. slope @ anchor	Wall height @ anchor	Contrib. width	Perp. slope used @ anchor	h_{eq} LL surch	Anchor Type	Check 'e' & Bearing
Anchor #1	**2.50 ft**	n	6.51 ft	5.25 ft	0.00 ft	**2.00 ft**	C	OK
Anchor #2	**0.00 ft**	n	0.00 ft	0.00 ft	0.00 ft	**2.00 ft**	E	N/A
Anchor #3	**0.00 ft**	n	0.00 ft	0.00 ft	0.00 ft	**2.00 ft**	E	N/A
Anchor #4	**0.00 ft**	n	0.00 ft	0.00 ft	0.00 ft	**2.00 ft**	E	N/A
Anchor #5	**0.00 ft**	n	0.00 ft	0.00 ft	0.00 ft	**2.00 ft**	E	N/A

CALCULATION NOTES:

1. Wingwall calculations are done in accordance with the current edition of the *AASHTO LRFD Bridge Design Specifications* .
2. Moments are summed about the *toe (face) of the wingwall* (point "o" on attached "Pressure Diagram").
3. K_a is calculated using equation found in former AASHTO LRFD Specifications Equation 3.11.5.3-1

$$K_a = \frac{\sin^2(\phi + \theta)}{\sin^2\theta \sin(\theta - \delta)\left[1 + \sqrt{\frac{\sin(\phi + \delta)\sin(\phi - \beta)}{\sin(\theta - \delta)\sin(\theta + \beta)}}\right]^2}$$

4. Only 80% of the soil unit weight is used for the eccentricity/ stability calculation. This is a conservative assumption as explained in the full HITEC report "Evaluation of the CON/SPAN® Wingwall System"
5. The full 100% of the soil unit weight is used for the bearing calculations.
6. These calculations conservatively assume that the wall anchor has the same unit weight as soil.
7. The wingwall angle (in plan view) is measured from perpendicular to roadway.
8. Barrier loads are distributed per AASHTO LRFD Specifications Section 13

Anchor 1			
SOIL PROPERTY	**DESCRIPTION**	**VALUE section AB**	**VALUE section BC**
ϕ	friction angle of soil	32	32
θ	angle of wall to the y-axis	0	30
δ	wall-soil friction angle *(measured from a perpendicular with the wall)* =0, if significant vibrations of backfill or modules settling more than backfill. = 0.5*ϕ, if modules are uniform width. = 0.75*ϕ, if averaged pressure surface	24	16
x	side slopes from road (x:1)	1.5	
α	wingwall angle (angle w/ perpendicular to road)	0	
	slope of backfill (perpendicular to wall)	0.00	
β	angle of backfill (perpendicular to wall)	0.0	0.0
	$(K_a)_{AB}$ =	0.27	$(K_a)_{BC}$ = 0.11

Anchor 1

VARIABLE	DESCRIPTION OF VARIABLE	VALUE	
H	wingwall design height at anchor location (feet)	6.51	
h_{surch}	height of live load surcharge (feet)	2.00	
t	thickness of wingwall (inches)	12	
δ	wall friction angle for section AB	24	
β	angle of backfill (degrees)	0.0	
L	length of anchor (feet)	5.04	C
γ_s	unit weight of backfill (kcf)	140	
γ_c	unit weight of concrete (kcf)	150	
γ_{surch}	unit weight of surcharge (kcf)	120	*(per AASHTO LRFD 3.11.6.4)*

Description	Vertical Reaction (k/ft)	Horizontal Reaction (k/ft)	Lever Arm (ft)	Disturbing Moment (ft-k/ft)	"Stability" Resisting Moment (ft-k/ft)	"Bearing" Resisting Moment (ft-k/ft)
wall (W_w)	0.98		0.50		0.49	0.49
soil I_A	0.00		4.36		0.00	0.00
soil I_B	2.12		3.52		5.98	7.48
soil II_A	1.10		2.13		1.87	2.34
soil II_B	0.68		4.02		2.20	2.75
$W_{surcharge(vert)}$	1.21		3.52		4.26	4.26
$W_{parapet}$	0.00		0.50		0.00	0.00
Soil Pressure						
$(P_{AB})_v$	0.07		6.04		0.43	0.43
$(P_{AB})_h$		0.16	4.50	0.72		
$(P_{BC1})_v$	-0.05		4.89		-0.25	-0.25
$(P_{BC1})_h$		0.20	1.50	0.30		
$(P_{BC2})_v$	-0.03		4.50		-0.15	-0.15
$(P_{BC2})_h$		0.13	0.83	0.11		
$P_{surcharch(hor)}$		0.39	3.26	1.28		
TOTALS =	6.08	0.89		2.41	14.83	17.35

AASHTO LRFD C11.6.3.3 states: The specified criteria for the location of the resultant, coupled with investigation of the bearing pressure, replaces the investigation of the ratio of stabilizing moment to overturning moment. See Section III Soil Bearing Pressure.

II. CHECK OVERTURNING STABILITY AT CONNECTION PLATES

The connection plates provide stability for the portion of the wall not supported by the anchors, i.e., the section closest to the culvert. (See wingwall sketch)

Data:

number of plates = 2

ϕ = 32

δ = 24

γ_s = 0.140 kcf

$\gamma_{(surcharge)}$ = 0.120 kcf

wall height @ plates (H) = **8.33 ft**

Live load surcharge (h) = **2.00 ft**

section width for plates (S) = 2.8 ft

y_{Psh} = H/3 = 2.8 ft

y_{PLL} = H/2 = 4.2 ft

y_{p1} = **0.75 ft**

y_{p2} = **4.75 ft**

A_{bolt} = 0.79

t_{plate} = 1.00 in

$\phi F_{(bolt)}$ = 30 ksi

$F_{y(plate)}$ = 36 ksi

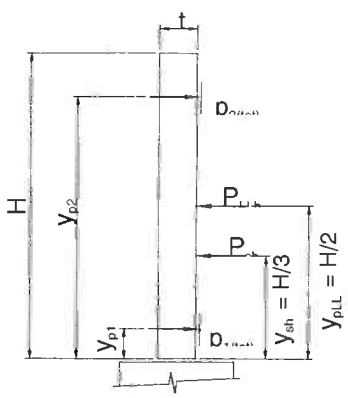

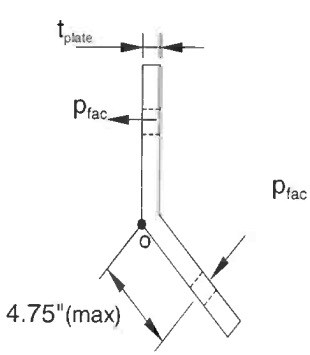

length of connection plate is 10"

Find soil pressure on section:

Because the wall is more rigid at the plates, at-rest soil pressure coefficient (K_o) is used.

K_o = 1-sin ϕ = 0.47 *(AASHTO LRFD eq. 3.11.5.2-1)*

$P_{sh} = (^1/_2)\gamma_s K_o H^2(S)(\cos\delta)$ = 5.74 K

$P_{LLh} = K_o\gamma_s HhS(\cos\delta)$ = 2.36 K

$P_{impact} = P_{imp}S/L_{distr}$ = 0

Find reaction at plate:

Sum moments about bottom plate, p_1

$\Sigma M_{p1} = 0 = P_{sh}(y_{Psh} - y_{p1}) - p_2(y_{p2} - y_{p1})$ *(dead load)*

$\Sigma M_{p1} = 0 = P_{LL}(y_{PLL} - y_{p1}) - p_{2LL}(y_{p2} - y_{p1}) + P_{imp}(y_{imp} - y_{p1})$ *(live load)*

$p_2 = \dfrac{P_{sh}(y_{Psh} - y_{p1})}{(y_{p2} - y_{p1})}$ = 2.91 K $\qquad p_1 = P_{sh} - p_2$ = 2.83 K

$p_{2LL} = \dfrac{P_{LLh}(y_{pLL} - y_{p1}) + P_{imp}(y_{imp} - y_{p1})}{(y_{p2} - y_{p1})}$ = 2.02 K $\qquad p_{1LL} = P_{LL} + P_{imp} - p_{2LL}$ = 0.35 K

Find factored reaction:

Load factors are per AASHTO LRFD 3.4.1-1 & Table 3.4.1-2

$p_{fac} = \gamma p_{max(DL)} + (1.75)p_{max(LL)}$

$p_{fac} = (1.35)p_{(DL)} + (1.75)p_{(LL)}$

$p_{1(tot,\ factored)}$ = 4.42 K

$p_{2(tot,\ factored)}$ = 7.45 K **Controls**

$p_{(max,\ factored)}$ = 7.45 K

Check bolts:

The special Richmond Screw Anchor *"wingwall insert" pullout capacity was obtained from the manufacturer and has approx. 3:1 safety factor.*

Pullout capacity = 16.5 k/bolt **Controls**

Bolt tension = $\phi F A_{bolt}$ = 23.7 k/bolt

F.S. = $\dfrac{\text{Capacity* 2 bolts}}{(p_{fac})}$ = 4.43 *> 1.0, OK*

Check bending of plate:

Sum moments about corner of plate, point "o"

$\Sigma M_o = (p_{fac})(4.75")$ = 35392 lb-in

$I_{pl} = bh^3/12$ = 0.83 in^4

$\sigma_{max} = \dfrac{My}{I_{pl}}$ = 21 ksi $< \phi F_y = 0.9F_y$ *OK*

(AISC LRFD-F2 states ϕ_b = 0.9)

III. CHECK SOIL BEARING PRESSURE AND SLIDING UNDER CAST-IN-PLACE FOOTING

The reaction will be supported on the horizontal portion of the anchor plus the footing.

R_v = Total vertical reaction at anchor (using 100% of soil weight).
R_h = Total horizontal reaction at anchor.
M_D = Disturbing moment at anchor.
M_{Rb} = Resisting moment due to 100% of soil at anchor.

Summary of loads at anchors

anchor	anchor base length	R_v ($^K/_F$)	R_h ($^K/_F$)	M_D ($^{K\text{-}F}/_F$)	M_{Rb} ($^{K\text{-}F}/_F$)
1	2.73	6.08	0.89	2.41	17.35
2	4.73	0.00	0.00	0.00	0.00
3	4.73	0.00	0.00	0.00	0.00
4	4.73	0.00	0.00	0.00	0.00
5	4.73	0.00	0.00	0.00	0.00

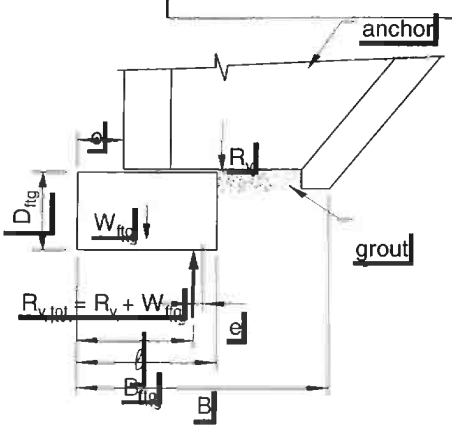

Check the bearing pressure under the wall

D_{ftg} = 5.0 ft
B_{ftg} = 2.5 ft
o = 9 in
W_{ftg} = 1.88 klf

Q_{allow} = 3.0 KSF

$R_{v,tot}$ = total vertical reaction ($R_v + W_{ftg}$)
B = bearing width
= maximum of (anchor base length + o) or B_{ftg}
ℓ = location of vertical resultant ($R_{v,tot}$) along bearing width

$$= \frac{R_v((M_{Rb}-M_D)/R_v + o) + W_{ftg}(B/2)}{R_{v,tot}}$$

e = eccentricity of resultant
= B/2 - ℓ
B' = adjusted bearing width
= B - 2e
q = bearing pressure *(must be less than Q_{allow})*
= $R_{v,tot}$ / B'

Check bearing pressure at each anchor

anchor	B (ft)	ℓ (ft)	e	check e	B' (ft)	q	check q
1	4.48	2.75	-0.51	*OK*	3.47	2.29	*OK*
2	0.00	0.00	0.00	*n/a*	0.00	0.00	*n/a*
3	0.00	0.00	0.00	*n/a*	0.00	0.00	*n/a*
4	0.00	0.00	0.00	*n/a*	0.00	0.00	*n/a*
5	0.00	0.00	0.00	*n/a*	0.00	0.00	*n/a*

Check the sliding factor of safety

$H_R = \phi * R_{V,tot} * .8 * \tan \phi$ *(AASHTO LRFD 10.6.3.4)*

(must be >R_h)

ϕ = 0.9 *from AASHTO LRFD Table 10.5.5.2.2-1 for precast concrete on sand*

Check sliding at each anchor

anchor	$R_{v,tot}$ (k/f)	R_R (k/f)	R_h	check $R_R > R_h$
1	7.96	3.58	0.89	*OK*
2	0.00	0.00	0.02	*n/a*
3	0.00	0.00	0.02	*n/a*
4	0.00	0.00	0.02	*n/a*
5	0.00	0.00	0.02	*n/a*

IV. CHECK BENDING OF FOOTING CROSS SECTION

Bending need not be considered in footings when the footing depth, D, exceeds the projection, pr, of the footing beyond the edge of the wall.

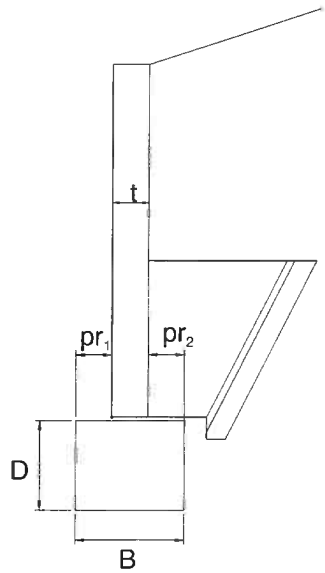

pr_1 = offset(o) = 9 in

pr_2 = B - o - t = 9 in **Controls**

pr_{max} = 9 in

projection < D *OK*

Use minimal steel stirrups
#4 @ 48 inches o.c.

V. CHECK WALL SECTION - BENDING AND SHEAR (vertical bars)

Assumptions: *1. Wall stem is cantilevered from anchor.*
2. Use active earth pressure because wall can deflect at top.
3. Use K_a and δ from Anchor Stability Calculations.

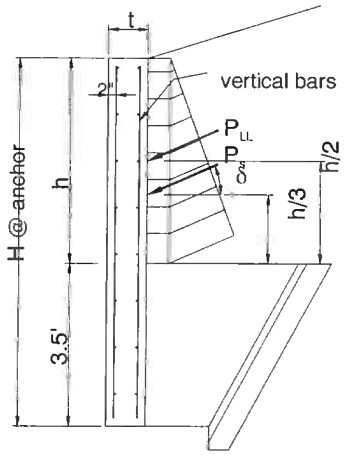

Horizontal loads:

$P_{sh} = (^1/_2)\gamma_s K_a h^2(\cos\delta)$

$P_{LLh} = \gamma_s K_a h(h_{surcharge})(\cos\delta)$

$P_{impact} = P_{imp}/L_{distr}$

Factored forces:

Load factors are per AASHTO LRFD 3.4.1-1 & Table 3.4.1-2

M_u = Section width$[(1.35)P_{sh}(h/3) + (1.75)P_{LLh}(h/2) + (1.75)P_{imp}(h+y_{imp})]$

V_u = Section width$[(1.35)P_{sh} + (1.75P_{LLh} + (1.75P_{imp}]$

Summary of forces at anchors

anchor	H (ft)	h (ft)	$h_{surcharge}$ (ft)	P_{sh} (k/ft)	P_{LLh} (k/ft)	P_{imp} (k/ft)	M_u (k-ft)	V_u (k)
1	6.51	3.01	2.00	0.16	0.18	0.00	3.64	2.79
2	0.00	0.00	2.00	0.00	0.00	0.00	0.00	0.00
3	0.00	0.00	2.00	0.00	0.00	0.00	0.00	0.00
4	0.00	0.00	2.00	0.00	0.00	0.00	0.00	0.00
5	0.00	0.00	2.00	0.00	0.00	0.00	0.00	0.00

Check bending (reinforcment) at anchors

f'_c = **5000 psi**

f_y = **60000 psi**

ϕ_b = **0.9** *(AASHTO LRFD 5.4.2.1)*

$m = f_y/0.85f'_c$ = 14.12

d = 9.75 in

b = anchor's contrib. width

$$R_u = \frac{M_u}{\phi_b b d^2}$$

$$\rho_{reqd} = \frac{1}{m}\left(1-\sqrt{1-\frac{2mR_u}{f_y}}\right)$$

ρ_{min} = *AASHTO LRFD 5.7.3.3.2 states the minimum reinforcement is the lesser of 1.2Mcr OR 1.33 times the factored moment required by strength.*

anchor	R_u (psi)	ρ_{reqd}	ρ_{cr}	ρ_{min}	$A_{s\ min}$ (in^2)	$A_{s\ actual}$ (in^2)	check
1	8	0.0001	0.0030	0.0002	0.11	1.08	OK
2	0	0.0000	0.0030	0.0000	0.00	#VALUE!	N/A
3	0	0.0000	0.0030	0.0000	0.00	#VALUE!	N/A
4	0	0.0000	0.0030	0.0000	0.00	#VALUE!	N/A
5	0	0.0000	0.0030	0.0000	0.00	#VALUE!	N/A

Check shear

$V_c = (.0316)*\beta \sqrt{f'_c}\, b_v d_v$ *(V_c calculated by AASHTO LRFD eq'n 5.8.3.3-3)*

$\phi = 0.9$ *(AASHTO LRFD 5.5.4.2.1)*

$\beta = 2$ *(AASHTO LRFD 5.8.3.4.1)*

$d_v = .9*d$ or $.72*t$ *whichever is greater (AASHTO LRFD 5.8.2.9)*

anchor	ϕV_c	check $V_u < \phi V_c$
1	70.31	*OK*
2	0.00	*N/A*
3	0.00	*N/A*
4	0.00	*N/A*
5	0.00	*N/A*

VI. CHECK TYPE 'C' ANCHOR ATTACHMENT

Check capacity of connector for pullout (truncated pyramid failure), shear, tension, and combined shear & tension

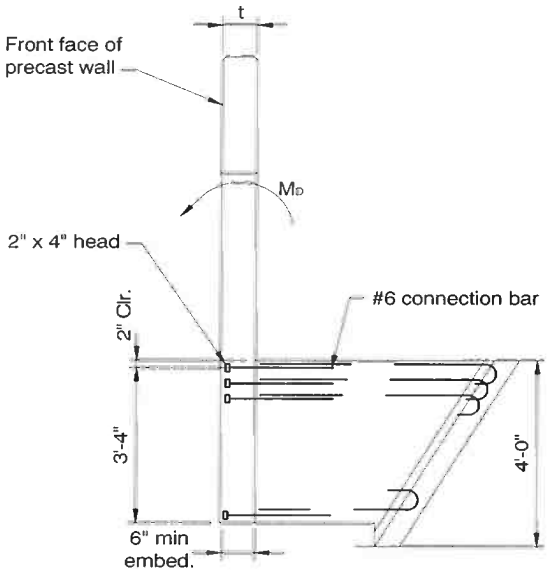

embedment depth (l_e) = **6 in**

Attachment depth = 42 in
X head dimension (Xd_{head}) = 3 in
Y head dimension (Yd_{head}) = 3 in
Bar size = **# 6**
rows = **3**
row spacing = **5 in**
wall thickness (t) = 12 in
x = Xd_{head} (*since only 1 column*) = 3 in
y = (#rows-1)(row spacing) + Yd_{head} = 13 in
z = min(x,y) = 3 in
h_{min} = (z + $2l_e$)/2 = 7.5 in
A_R = (x+$2l_e$-2d)(y+$2l_e$-2d) = -9.0 in^2

f'_c = **5000 psi**
f_y = **60000 psi**
$\phi_{concrete}$ = 0.85
ϕ_{steel} = 0.90

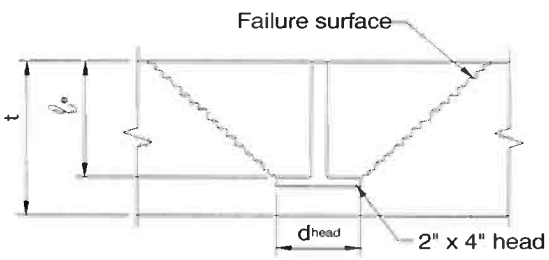

TENSION CAPACITY (Per PCI Design Handbook §6.5.2.1)

t > hmin: failure surface does not penetrate slab

Find pullout capacity of concrete

if t >= h_{min}, ϕP_c = ϕ2.67sqrt(f'c)(x+2l_e)(y+2l_e)

if t < h_{min}, ϕP_c = ϕ2.67sqrt(f'c)[(x+2l_e)(y+2l_e) - A_R]

ϕP_c = 60.18 K

Find tension capacity of studs

ϕP_y = $\phi f_y(A_{bar})$(#bars)

ϕP_y = 71.57 K

controlling tension capacity (ϕP) = 60.18 K

Find moment capacity of anchor

Moment capacity of anchor (ϕM_n) = ϕP(d-a/2)

d = attachment depth - bar cover - (y-Yd_{head})/2 = 35 in

a = $A_s f_y$/0.85f'_cb = 3.12 in

ϕM_n = 167.70 k-f

SHEAR CAPACITY (Per PCI Design Handbook §6.5.2.2)

Find shear capacity of concrete

$\phi V_c = \phi V'_c C_w C_t C_c$

$\phi V'_c = \phi 12.5 d_e^{1.5} \text{sqrt}(f'_c)$	= 187.4 K
$C_w = 1 + \text{spacing}/3.5d_e < \#\text{columns}$	= 1.0
$C_t = t/1.3d_e <= 1.0$	= 0.23
$C_c = 0.4 + 0.7d_c/de <= 1.0$	= 0.9
d_e = attachment depth - cover - bar dia/2	= 40 in
d_c = distance to side of wingwall	= 30 in

$\phi V_c = \phi V'_c C_w C_t C_c =$ 40.60 K

Find shear capacity of studs

$\phi V_y = \phi 0.9 f_y A_{bar}(\#\text{bars})$

ϕV_y = 64.41 K

controlling shear capacity (ϕV) = 40.60 K

FIND LOADS

Unfactored loads on anchors:

$M_{D(DL)}$ = (sec width)$M_{D(anchor)}$

$M_{D(LL)}$ = (sec width)($M_{D(anchor)}$ + P_{imp}*(wall ht + y_{imp}))

Factored loads:

Load factors are per AASHTO 3.22.1 & Table 3.22.1A

$M_u = (1.3)(1.3)M_{D(DL)} + (1.3)(1.67)M_{D(LL)}$

$P_u = M_u$ /(d-a/2)*cos(bar angle)

$V_u = M_u$ /(d-a/2)*sin(bar angle)

bar angle = 0°

Summary of forces

anchor	$M_{D(DL)}$ ft-k	$M_{D(LL)}$ ft-k	M_u ft-k	P_u k	V_u k
1	5.9	6.7	24.6	8.8	0.0
2	0.0	0.0	0.0	0.0	0.0
3	0.0	0.0	0.0	0.0	0.0
4	0.0	0.0	0.0	0.0	0.0
5	0.0	0.0	0.0	0.0	0.0

Summary of results

anchor	check $\phi M_n > M_u$	check $\phi P > P_u$	check $\phi V > V_u$	check combined V_c & P_c	check combined V_s & P_s
1	*OK*	*OK*	*OK*	*OK*	*OK*
2	*n/a*	*n/a*	*n/a*	*n/a*	*n/a*
3	*n/a*	*n/a*	*n/a*	*n/a*	*n/a*
4	*n/a*	*n/a*	*n/a*	*n/a*	*n/a*
5	*n/a*	*n/a*	*n/a*	*n/a*	*n/a*

Section 7
CSI Wing wall 3
Calculations

Concrete Systems Inc.
9 Commercial St., Hudson, NH,03051
Phone 603-889-4163
Fax 603-889-2417

AASHTO LRFD WINGWALL CALCULATIONS

PROJECT NUMBER: R22624 **WW 3**
PROJECT NAME: ROUTE 106 BRIDGE REPLACEMENT T. H. 61 (KENDALL ROAD)
DATE: Feb 25, 2016
BY: BK

INPUT PARAMETERS:

Wall geometry

Panel Height (high) = **6.75 ft**
Panel Height (low) = **3.56 ft**
Wall Panel Length = **5.00 ft**
Entire Wall length = **5.00 ft**
Length of flat = **1.00 ft**
wall thickness = **12**
Wingwall Drop *(high-low)* = 3.19 ft
Wall slope = 0.7975
Max fill ht. *(t/road to b/ww)* = **8.75 ft**
Fill Slope *(perp. to road)* = **1.5**
Wall angle *(perp. to road)* = **45**
Fill slope *(perp. to wall)* = 2.12
Wingwall Panel Connected to Bridge Unit= ☑ Yes

Soil properties

γ_{soil} = **140 pcf**
γ_{conc} = **150 pcf**
$\gamma_{LLsurcharge}$ = **120 pcf**
ϕ_{AB} = **32**
θ_{AB} = **0**
δ_{AB} = **24**
ϕ_{BC} = **32**
θ_{BC} = **30**
δ_{BC} = **16**

Foundation

D_{ftg} = **5.0 ft**
B_{ftg} = **2.5 ft**
o = **9 in**
Q_{soil} = **3.0 KSF**

Railing or barrier

NONE
T/WW to load = **2.00 ft**
impact load = **10.00 K**

	Distance to anchor	Overriding perp. slope @ anchor	Wall height @ anchor	Contrib. width	Perp. slope used @ anchor	h_{eq} LL surch	Anchor Type	Check 'e' & Bearing
Anchor #1	**2.50 ft**	n	5.55 ft	3.75 ft	2.12 ft	**2.00 ft**	C	*OK*
Anchor #2	**0.00 ft**	n	0.00 ft	0.00 ft	2.12 ft	**2.00 ft**	E	*N/A*
Anchor #3	**0.00 ft**	n	0.00 ft	0.00 ft	2.12 ft	**2.00 ft**	E	*N/A*
Anchor #4	**0.00 ft**	n	0.00 ft	0.00 ft	2.12 ft	**2.00 ft**	E	*N/A*
Anchor #5	**0.00 ft**	n	0.00 ft	0.00 ft	2.12 ft	**2.00 ft**	E	*N/A*

CALCULATION NOTES:

1. Wingwall calculations are done in accordance with the current edition of the *AASHTO LRFD Bridge Design Specifications*.
2. Moments are summed about the *toe (face) of the wingwall* (point "o" on attached "Pressure Diagram").
3. K_a is calculated using equation found in former AASHTO LRFD Specifications Equation 3.11.5.3-1

$$K_a = \frac{\sin^2(\phi + \theta)}{\sin^2\theta \sin(\theta - \delta)\left[1 + \sqrt{\frac{\sin(\phi + \delta)\sin(\phi - \beta)}{\sin(\theta - \delta)\sin(\theta + \beta)}}\right]^2}$$

4. Only 80% of the soil unit weight is used for the eccentricity/ stability calculation. This is a conservative assumption as explained in the full HITEC report "Evaluation of the CON/SPAN® Wingwall System"
5. The full 100% of the soil unit weight is used for the bearing calculations.
6. These calculations conservatively assume that the wall anchor has the same unit weight as soil.
7. The wingwall angle (in plan view) is measured from perpendicular to roadway.
8. Barrier loads are distributed per AASHTO LRFD Specifications Section 13

Anchor 1			
SOIL PROPERTY	**DESCRIPTION**	**VALUE section AB**	**VALUE section BC**
ϕ	friction angle of soil	32	32
θ	angle of wall to the y-axis	0	30
δ	wall-soil friction angle *(measured from a perpendicular with the wall)* =0, if significant vibrations of backfill or modules settling more than backfill. = 0.5*ϕ, if modules are uniform width. = 0.75*ϕ, if averaged pressure surface	24	16
x	side slopes from road (x:1)	1.5	
α	wingwall angle (angle w/ perpendicular to road)	45	
	slope of backfill (perpendicular to wall)	2.12	
β	angle of backfill (perpendicular to wall)	25.2	25.2
	$(K_a)_{AB}$ =	0.44	$(K_a)_{BC}$ = 0.16

Anchor 1

VARIABLE	DESCRIPTION OF VARIABLE	VALUE	
H	wingwall design height at anchor location (feet)	5.55	
h_{surch}	height of live load surcharge (feet)	2.00	
t	thickness of wingwall (inches)	12	
δ	wall friction angle for section AB	24	
β	angle of backfill (degrees)	25.2	
L	length of anchor (feet)	5.04	C
γ_s	unit weight of backfill (kcf)	140	
γ_c	unit weight of concrete (kcf)	150	
γ_{surch}	unit weight of surcharge (kcf)	120	*(per AASHTO LRFD 3.11.6.4)*

Description	Vertical Reaction (k/ft)	Horizontal Reaction (k/ft)	Lever Arm (ft)	Disturbing Moment (ft-k/ft)	"Stability" Resisting Moment (ft-k/ft)	"Bearing" Resisting Moment (ft-k/ft)
wall (W_w)	0.83		0.50		0.42	0.42
soil I_A	0.84		4.36		2.92	3.65
soil I_B	1.45		3.52		4.08	5.10
soil II_A	1.10		2.13		1.87	2.34
soil II_B	0.68		4.02		2.20	2.75
$W_{surcharge(vert)}$	1.21		3.52		4.26	4.26
$W_{parapet}$	0.00		0.50		0.00	0.00
Soil Pressure						
$(P_{AB})_v$	0.24		6.04		1.47	1.47
$(P_{AB})_h$		0.55	4.98	2.72		
$(P_{BC1})_v$	-0.11		4.89		-0.53	-0.53
$(P_{BC1})_h$		0.43	1.50	0.65		
$(P_{BC2})_v$	-0.05		4.50		-0.22	-0.22
$(P_{BC2})_h$		0.19	0.83	0.16		
$P_{surcharch(hor)}$		0.53	3.96	2.11		
TOTALS =	6.20	1.70		5.64	16.48	19.25

AASHTO LRFD C11.6.3.3 states: The specified criteria for the location of the resultant, coupled with investigation of the bearing pressure, replaces the investigation of the ratio of stabilizing moment to overturning moment. See Section III Soil Bearing Pressure.

II. CHECK OVERTURNING STABILITY AT CONNECTION PLATES

The connection plates provide stability for the portion of the wall not supported by the anchors, i.e., the section closest to the culvert. (See wingwall sketch)

Data:

number of plates = 2

ϕ = 32

δ = 24

γ_s = 0.140 kcf

$\gamma_{(surcharge)}$ = 0.120 kcf

wall height @ plates (H) = **6.75 ft**

Live load surcharge (h) = **2.00 ft**

section width for plates (S) = 1.3 ft

$y_{Psh} = H/3$ = 2.3 ft

$y_{PLL} = H/2$ = 3.4 ft

y_{p1} = **0.75 ft**

y_{p2} = **4.75 ft**

A_{bolt} = 0.79

t_{plate} = 1.00 in

$\phi F_{(bolt)}$ = 30 ksi

$F_{y(plate)}$ = 36 ksi

Find soil pressure on section:

Because the wall is more rigid at the plates, at-rest soil pressure coefficient (K_o) is used.

$K_o = 1\text{-}\sin\phi = 0.47$ *(AASHTO LRFD eq. 3.11.5.2-1)*

$P_{sh} = (^1/_2)\gamma_s K_o H^2(S)(\cos\delta) = 1.71$ K

$P_{LLh} = K_o\gamma_s HhS(\cos\delta) = 0.87$ K

$P_{impact} = P_{imp}S/L_{distr} = 0$

Find reaction at plate:

Sum moments about bottom plate, p_1

$\Sigma M_{p1} = 0 = P_{sh}(y_{Psh} - y_{p1}) - p_2(y_{p2} - y_{p1})$ *(dead load)*

$\Sigma M_{p1} = 0 = P_{LL}(y_{PLL} - y_{p1}) - p_{2LL}(y_{p2} - y_{p1}) + P_{imp}(y_{imp} - y_{p1})$ *(live load)*

$p_2 = \dfrac{P_{sh}(y_{Psh} - y_{p1})}{(y_{p2} - y_{p1})} = 0.64$ K $\qquad p_1 = P_{sh} - p_2 = 1.07$ K

$p_{2LL} = \dfrac{P_{LLh}(y_{pLL} - y_{p1}) + P_{imp}(y_{imp} - y_{p1})}{(y_{p2} - y_{p1})} = 0.57$ K $\qquad p_{1LL} = P_{LL} + P_{imp} - p_{2LL} = 0.30$ K

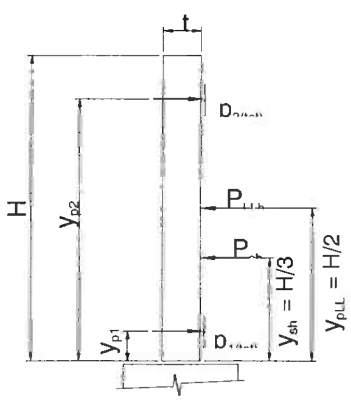

Find factored reaction:

Load factors are per AASHTO LRFD 3.4.1-1 & Table 3.4.1-2

$p_{fac} = \gamma p_{max(DL)} + (1.75)p_{max(LL)}$

$p_{fac} = (1.35)p_{(DL)} + (1.75)p_{(LL)}$

$p_{1(tot,\ factored)} = 1.97$ K ***Controls***

$p_{2(tot,\ factored)} = 1.87$ K

$p_{(max,\ factored)} = 1.97$ K

Check bolts:

The special Richmond Screw Anchor *"wingwall insert" pullout capacity was obtained from the manufacturer and has approx. 3:1 safety factor.*

Pullout capacity = 16.5 k/bolt ***Controls***

Bolt tension = $\phi F A_{bolt}$ = 23.7 k/bolt

$F.S. = \dfrac{\text{Capacity* 2 bolts}}{(p_{fac})} = 16.77$ *> 1.0, OK*

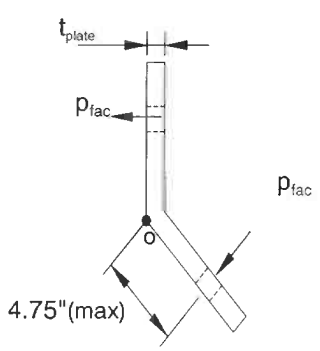

Check bending of plate:

Sum moments about corner of plate, point "o"

$\Sigma M_o = (p_{fac})(4.75") = 9346$ lb-in

$I_{pl} = bh^3/12 = 0.83$ in^4

$\sigma_{max} = \dfrac{My}{I_{pl}} = 6$ ksi $\quad < \phi F_y = 0.9F_y$ *OK*

(AISC LRFD-F2 states $\phi_b = 0.9$)

length of connection plate is 10"

III. CHECK SOIL BEARING PRESSURE AND SLIDING UNDER CAST-IN-PLACE FOOTING

The reaction will be supported on the horizontal portion of the anchor plus the footing.

R_v = Total vertical reaction at anchor (using 100% of soil weight).
R_h = Total horizontal reaction at anchor.
M_D = Disturbing moment at anchor.
M_{Rb} = Resisting moment due to 100% of soil at anchor.

Summary of loads at anchors

anchor	anchor base length	R_v ($^K/_F$)	R_h ($^K/_F$)	M_D ($^{K\text{-}F}/_F$)	M_{Rb} ($^{K\text{-}F}/_F$)
1	2.73	6.20	1.70	5.64	19.25
2	4.73	0.00	0.00	0.00	0.00
3	4.73	0.00	0.00	0.00	0.00
4	4.73	0.00	0.00	0.00	0.00
5	4.73	0.00	0.00	0.00	0.00

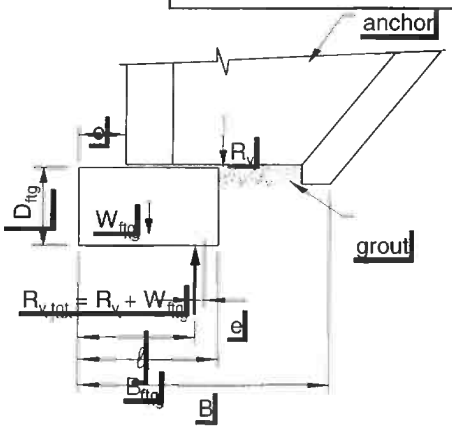

Check the bearing pressure under the wall

D_{ftg} = 5.0 ft
B_{ftg} = 2.5 ft
o = 9 in
W_{ftg} = 1.88 klf

Q_{allow} = 3.0 KSF

$R_{v,tot}$ = total vertical reaction ($R_v + W_{ftg}$)
B = bearing width
= maximum of (anchor base length + o) or B_{ftg}
ℓ = location of vertical resultant ($R_{v,tot}$) along bearing width

$$= \frac{R_v((M_{Rb}-M_D)/R_v + o) + W_{ftg}(B/2)}{R_{v,tot}}$$

e = eccentricity of resultant
= B/2 - ℓ
B' = adjusted bearing width
= B - 2e
q = bearing pressure *(must be less than Q_{allow})*
= $R_{v,tot}$ / B'

Check bearing pressure at each anchor

anchor	B (ft)	ℓ (ft)	e	check e	B' (ft)	q	check q
1	4.48	2.55	-0.31	*OK*	3.86	2.09	*OK*
2	0.00	0.00	0.00	*n/a*	0.00	0.00	*n/a*
3	0.00	0.00	0.00	*n/a*	0.00	0.00	*n/a*
4	0.00	0.00	0.00	*n/a*	0.00	0.00	*n/a*
5	0.00	0.00	0.00	*n/a*	0.00	0.00	*n/a*

Check the sliding factor of safety

$R_R = \phi * R_{V,tot} * .8 * \tan \phi$ *(AASHTO LRFD 10.6.3.4)*

(must be >R_h)

ϕ = 0.9 *from AASHTO LRFD Table 10.5.5.2.2-1 for precast concrete on sand*

Check sliding at each anchor

anchor	$R_{v,tot}$ (k/f)	R_R (k/f)	R_h	check $R_R > R_h$
1	8.08	3.64	1.70	*OK*
2	0.00	0.00	0.02	*n/a*
3	0.00	0.00	0.02	*n/a*
4	0.00	0.00	0.02	*n/a*
5	0.00	0.00	0.02	*n/a*

IV. CHECK BENDING OF FOOTING CROSS SECTION

Bending need not be considered in footings when the footing depth, D, exceeds the projection, pr, of the footing beyond the edge of the wall.

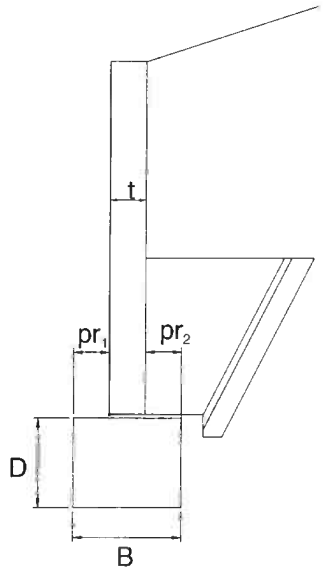

pr_1 = offset(o) = 9 in

pr_2 = B - o - t = 9 in ***Controls***

pr_{max} = 9 in

projection < D *OK*

Use minimal steel stirrups
#4 @ 48 inches o.c.

V. CHECK WALL SECTION - BENDING AND SHEAR (vertical bars)

Assumptions: 1. *Wall stem is cantilevered from anchor.*
2. *Use active earth pressure because wall can deflect at top.*
3. *Use K_a and δ from Anchor Stability Calculations.*

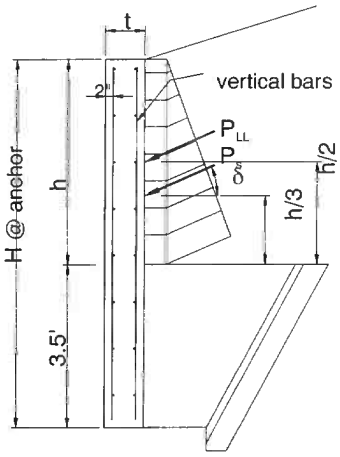

Horizontal loads:

$P_{sh} = (^1/_2)\gamma_s K_a h^2(\cos\delta)$

$P_{LLh} = \gamma_s K_a h(h_{surcharge})(\cos\delta)$

$P_{impact} = P_{imp}/L_{distr}$

Factored forces:

Load factors are per AASHTO LRFD 3.4.1-1 & Table 3.4.1-2

M_u = Section width$[(1.35)P_{sh}(h/3) + (1.75)P_{LLh}(h/2) + (1.75)P_{imp}(h+y_{imp})]$

V_u = Section width$[(1.35)P_{sh} + (1.75P_{LLh} + (1.75P_{imp}]$

Summary of forces at anchors

anchor	H (ft)	h (ft)	$h_{surcharge}$ (ft)	P_{sh} (k/ft)	P_{LLh} (k/ft)	P_{imp} (k/ft)	M_u (k-ft)	V_u (k)
1	5.55	2.05	2.00	0.12	0.20	0.00	1.73	1.88
2	0.00	0.00	2.00	0.00	0.00	0.00	0.00	0.00
3	0.00	0.00	2.00	0.00	0.00	0.00	0.00	0.00
4	0.00	0.00	2.00	0.00	0.00	0.00	0.00	0.00
5	0.00	0.00	2.00	0.00	0.00	0.00	0.00	0.00

Check bending (reinforcment) at anchors

f'_c = **5000 psi**

f_y = **60000 psi**

ϕ_b = **0.9** *(AASHTO LRFD 5.4.2.1)*

$m = f_y/0.85f'_c$ = 14.12

d = 9.75 in

b = anchor's contrib. width

$$R_u = \frac{M_u}{\phi_b b d^2}$$

$$\rho_{reqd} = \frac{1}{m}\left(1-\sqrt{1-\frac{2mR_u}{f_y}}\right)$$

ρ_{min} = *AASHTO LRFD 5.7.3.3.2 states the minimum reinforcement is the lesser of 1.2Mcr OR 1.33 times the factored moment required by strength.*

anchor	R_u (psi)	ρ_{reqd}	ρ_{cr}	ρ_{min}	$A_{s\,min}$ (in^2)	$A_{s\,actual}$ (in^2)	check
1	5	0.0001	0.0030	0.0001	0.05	0.88	OK
2	0	0.0000	0.0030	0.0000	0.00	#VALUE!	N/A
3	0	0.0000	0.0030	0.0000	0.00	#VALUE!	N/A
4	0	0.0000	0.0030	0.0000	0.00	#VALUE!	N/A
5	0	0.0000	0.0030	0.0000	0.00	#VALUE!	N/A

Check shear

$V_c = (.0316)*\beta \sqrt{f'_c}\, b_v d_v$ *(V_c calculated by AASHTO LRFD eq'n 5.8.3.3-3)*

$\phi = 0.9$ *(AASHTO LRFD 5.5.4.2.1)*

$\beta = 2$ *(AASHTO LRFD 5.8.3.4.1)*

$d_v = .9*d$ or $.72*t$ *whichever is greater (AASHTO LRFD 5.8.2.9)*

anchor	ϕV_c	check $V_u < \phi V_c$
1	50.22	*OK*
2	0.00	*N/A*
3	0.00	*N/A*
4	0.00	*N/A*
5	0.00	*N/A*

VI. CHECK TYPE 'C' ANCHOR ATTACHMENT

Check capacity of connector for pullout (truncated pyramid failure), shear, tension, and combined shear & tension

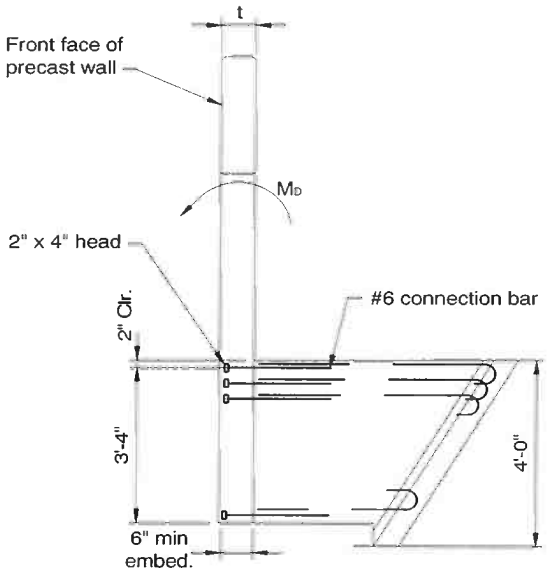

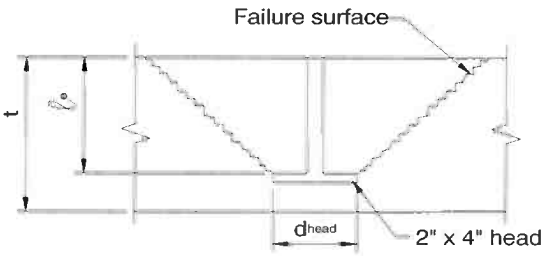

embedment depth (l_e) = **6 in**

Attachment depth = 42 in
X head dimension (Xd_{head}) = 3 in
Y head dimension (Yd_{head}) = 3 in
Bar size = **# 6**
rows = **3**
row spacing = **5 in**
wall thickness (t) = 12 in
x = Xd_{head} (*since only 1 column*) = 3 in
y = (#rows-1)(row spacing) + Yd_{head} = 13 in

z = min(x,y) = 3 in
h_{min} = (z + l_e)/2 = 7.5 in
A_R = (x+2l_e-2d)(y+2l_e-2d) = -9.0 in^2

f'_c = **5000 psi**
f_y = **60000 psi**
$\phi_{concrete}$ = 0.85
ϕ_{steel} = 0.90

TENSION CAPACITY (Per PCI Design Handbook §6.5.2.1)

t > hmin: failure surface does not penetrate slab

Find pullout capacity of concrete

if t >= h_{min}, $\phi P_c = \phi 2.67 sqrt(f'c)(x+2l_e)(y+2l_e)$

if t < h_{min}, $\phi P_c = \phi 2.67 sqrt(f'c)[(x+2l_e)(y+2l_e) - A_R]$

ϕP_c = 60.18 K

controlling tension capacity (ϕP) = 60.18 K

Find tension capacity of studs

$\phi P_y = \phi f_y(A_{bar})$(#bars)

ϕP_y = 71.57 K

Find moment capacity of anchor

Moment capacity of anchor (ϕM_n) = $\phi P(d-a/2)$

d = attachment depth - bar cover - $(y-Yd_{head})/2$ = 35 in

$a = A_s f_y/0.85 f'_c b$ = 3.12 in

ϕM_n = 167.70 k-f

SHEAR CAPACITY (Per PCI Design Handbook §6.5.2.2)

Find shear capacity of concrete

$\phi V_c = \phi V'_c C_w C_t C_c$

$\phi V'_c = \phi 12.5 d_e^{1.5} \text{sqrt}(f'_c)$	= 187.4 K
$C_w = 1 + \text{spacing}/3.5d_e < \#\text{columns}$	= 1.0
$C_t = t/1.3d_e <= 1.0$	= 0.23
$C_c = 0.4 + 0.7d_c/de <= 1.0$	= 0.9
d_e = attachment depth - cover - bar dia/2	= 40 in
d_c = distance to side of wingwall	= 30 in

$\phi V_c = \phi V'_c C_w C_t C_c =$ 40.60 K

Find shear capacity of studs

$\phi V_y = \phi 0.9 f_y A_{bar}(\#\text{bars})$

ϕV_y = 64.41 K

controlling shear capacity (ϕV) = 40.60 K

FIND LOADS

Unfactored loads on anchors:

$M_{D(DL)}$ = (sec width)$M_{D(anchor)}$

$M_{D(LL)}$ = (sec width)($M_{D(anchor)}$ + P_{imp}*(wall ht + y_{imp}))

Factored loads:

Load factors are per AASHTO 3.22.1 & Table 3.22.1A

$M_u = (1.3)(1.3)M_{D(DL)} + (1.3)(1.67)M_{D(LL)}$

$P_u = M_u$ /(d-a/2)*cos(bar angle)

$V_u = M_u$ /(d-a/2)*sin(bar angle)

bar angle = 0°

Summary of forces

anchor	$M_{D(DL)}$ ft-k	$M_{D(LL)}$ ft-k	M_u ft-k	P_u k	V_u k
1	13.2	7.9	39.5	14.2	0.0
2	0.0	0.0	0.0	0.0	0.0
3	0.0	0.0	0.0	0.0	0.0
4	0.0	0.0	0.0	0.0	0.0
5	0.0	0.0	0.0	0.0	0.0

Summary of results

anchor	check $\phi M_n > M_u$	check $\phi P > P_u$	check $\phi V > V_u$	check combined V_c & P_c	check combined V_s & P_s
1	*OK*	*OK*	*OK*	*OK*	*OK*
2	*n/a*	*n/a*	*n/a*	*n/a*	*n/a*
3	*n/a*	*n/a*	*n/a*	*n/a*	*n/a*
4	*n/a*	*n/a*	*n/a*	*n/a*	*n/a*
5	*n/a*	*n/a*	*n/a*	*n/a*	*n/a*

Section 8
CSI Wing wall 4
Calculations

Concrete Systems Inc.
9 Commercial St., Hudson, NH,03051
Phone 603-889-4163
Fax 603-889-2417

AASHTO LRFD WINGWALL CALCULATIONS

PROJECT NUMBER: R22624 **WW 4**
PROJECT NAME: ROUTE 106 BRIDGE REPLACEMENT T. H. 61 (KENDALL ROAD)
DATE: Feb 25, 2016
BY: BK

INPUT PARAMETERS:

Wall geometry

Panel Height (high) = **7.58 ft**
Panel Height (low) = **7.16 ft**
Wall Panel Length = **16.50 ft**
Entire Wall length = **16.50 ft**
Length of flat = **1.00 ft**
wall thickness = **12**
Wingwall Drop *(high-low)* = 0.42 ft
Wall slope = 0.0271
Max fill ht. *(t/road to b/ww)* = **9.58 ft**
Fill Slope *(perp. to road)* = **1.5**
Wall angle *(perp. to road)* = **41**
Fill slope *(perp. to wall)* = 2.29
Wingwall Panel Connected to Bridge Unit= ☑ Yes

Soil properties

γ_{soil} = **140 pcf**
γ_{conc} = **150 pcf**
$\gamma_{LLsurcharge}$ = **120 pcf**
ϕ_{AB} = **32**
θ_{AB} = **0**
δ_{AB} = **24**
ϕ_{BC} = **32**
θ_{BC} = **30**
δ_{BC} = **16**

Foundation

D_{ftg} = **5.0 ft**
B_{ftg} = **2.5 ft**
o = **9 in**
Q_{soil} = **3.0 KSF**

Railing or barrier

NONE
T/WW to load = **2.00 ft**
impact load = **10.00 K**

	Distance to anchor	Overriding perp. slope @ anchor	Wall height @ anchor	Contrib. width	Perp. slope used @ anchor	h_{eq} LL surch	Anchor Type	Check 'e' & Bearing
Anchor #1	**2.50 ft**	n	7.23 ft	5.00 ft	3.07 ft	**2.00 ft**	C	OK
Anchor #2	**7.50 ft**	n	7.36 ft	5.00 ft	3.32 ft	**2.00 ft**	C	OK
Anchor #3	**12.50 ft**	n	7.50 ft	4.50 ft	3.60 ft	**2.00 ft**	C	OK
Anchor #4	**0.00 ft**	n	0.00 ft	0.00 ft	2.29 ft	**2.00 ft**	B	N/A
Anchor #5	**0.00 ft**	n	0.00 ft	0.00 ft	2.29 ft	**2.00 ft**	E	N/A

CALCULATION NOTES:

1. Wingwall calculations are done in accordance with the current edition of the *AASHTO LRFD Bridge Design Specifications* .
2. Moments are summed about the *toe (face) of the wingwall* (point "o" on attached "Pressure Diagram").
3. K_a is calculated using equation found in former AASHTO LRFD Specifications Equation 3.11.5.3-1

$$K_a = \frac{\sin^2(\phi + \theta)}{\sin^2\theta \sin(\theta - \delta)\left[1 + \sqrt{\frac{\sin(\phi + \delta)\sin(\phi - \beta)}{\sin(\theta - \delta)\sin(\theta + \beta)}}\right]^2}$$

4. Only 80% of the soil unit weight is used for the eccentricity/ stability calculation. This is a conservative assumption as explained in the full HITEC report "Evaluation of the CON/SPAN® Wingwall System"
5. The full 100% of the soil unit weight is used for the bearing calculations.
6. These calculations conservatively assume that the wall anchor has the same unit weight as soil.
7. The wingwall angle (in plan view) is measured from perpendicular to roadway.
8. Barrier loads are distributed per AASHTO LRFD Specifications Section 13

Anchor 1			
SOIL PROPERTY	**DESCRIPTION**	**VALUE section AB**	**VALUE section BC**
ϕ	friction angle of soil	32	32
θ	angle of wall to the y-axis	0	30
δ	wall-soil friction angle *(measured from a perpendicular with the wall)* =0, if significant vibrations of backfill or modules settling more than backfill. = 0.5*ϕ, if modules are uniform width. = 0.75*ϕ, if averaged pressure surface	24	16
x	side slopes from road (x:1)	1.5	
α	wingwall angle (angle w/ perpendicular to road)	41	
	slope of backfill (perpendicular to wall)	3.07	
β	angle of backfill (perpendicular to wall)	18.0	18.0
	$(K_a)_{AB}$ =	0.36	$(K_a)_{BC}$ = 0.13

Anchor 1

VARIABLE	DESCRIPTION OF VARIABLE	VALUE	
H	wingwall design height at anchor location (feet)	7.23	
h_{surch}	height of live load surcharge (feet)	2.00	
t	thickness of wingwall (inches)	12	
δ	wall friction angle for section AB	24	
β	angle of backfill (degrees)	18.0	
L	length of anchor (feet)	5.04	C
γ_s	unit weight of backfill (kcf)	140	
γ_c	unit weight of concrete (kcf)	150	
γ_{surch}	unit weight of surcharge (kcf)	120	*(per AASHTO LRFD 3.11.6.4)*

Description	Vertical Reaction (k/ft)	Horizontal Reaction (k/ft)	Lever Arm (ft)	Disturbing Moment (ft-k/ft)	"Stability" Resisting Moment (ft-k/ft)	"Bearing" Resisting Moment (ft-k/ft)
wall (W_w)	1.08		0.50		0.54	0.54
soil I_A	0.58		4.36		2.02	2.52
soil I_B	2.63		3.52		7.41	9.26
soil II_A	1.10		2.13		1.87	2.34
soil II_B	0.68		4.02		2.20	2.75
$W_{surcharge(vert)}$	1.21		3.52		4.26	4.26
$W_{parapet}$	0.00		0.50		0.00	0.00
Soil Pressure						
$(P_{AB})_v$	0.29		6.04		1.78	1.78
$(P_{AB})_h$		0.66	5.29	3.50		
$(P_{BC1})_v$	-0.11		4.89		-0.53	-0.53
$(P_{BC1})_h$		0.44	1.50	0.66		
$(P_{BC2})_v$	-0.04		4.50		-0.18	-0.18
$(P_{BC2})_h$		0.16	0.83	0.14		
$P_{surcharch(hor)}$		0.57	4.43	2.53		
TOTALS =	7.43	1.83		6.82	19.36	22.74

AASHTO LRFD C11.6.3.3 states: The specified criteria for the location of the resultant, coupled with investigation of the bearing pressure, replaces the investigation of the ratio of stabilizing moment to overturning moment. See Section III Soil Bearing Pressure.

Anchor 2			
SOIL PROPERTY	**DESCRIPTION**	**VALUE section AB**	**VALUE section BC**
ϕ	friction angle of soil	32	32
θ	angle of wall to the y-axis	0	30
δ	wall-soil friction angle *(measured from a perpendicular with the wall)* =0, if significant vibrations of backfill or mod settling more than backfill. = 0.5*ϕ, if modules are uniform width. = 0.75*ϕ, if averaged pressure surface	24	16
x	side slopes from road (x:1)	1.5	
α	wingwall angle (angle w/ perpendicular to road)	41	
	slope of backfill (perpendicular to wall)	3.32	
β	angle of backfill (perpendicular to wall)	16.8	18.0
	$(K_a)_{AB}$ =	0.35	$(K_a)_{BC}$ = 0.13

Anchor 2

VARIABLE	DESCRIPTION OF VARIABLE	VALUE	
H	wingwall design height at anchor location (feet)	7.36	
h_{surch}	height of live load surcharge (feet)	2.00	
t	thickness of wingwall (inches)	12	
δ	wall friction angle for section AB	24	
β	angle of backfill (degrees)	16.8	
L	length of anchor (feet)	5.04	C
γ_s	unit weight of backfill (kcf)	140	
γ_c	unit weight of concrete (kcf)	150	
γ_{surch}	unit weight of surcharge (kcf)	120	*(per AASHTO LRFD 3.11.6.4)*

Description	Vertical Reaction (k/ft)	Horizontal Reaction (k/ft)	Lever Arm (ft)	Disturbing Moment (ft-k/ft)	"Stability" Resisting Moment (ft-k/ft)	"Bearing" Resisting Moment (ft-k/ft)
wall (W_w)	1.10		0.50		0.55	0.55
soil I_A	0.54		4.36		1.87	2.33
soil I_B	2.73		3.52		7.68	9.60
soil II_A	1.10		2.13		1.87	2.34
soil II_B	0.68		4.02		2.20	2.75
$W_{surcharge}$	1.21		3.52		4.26	4.26
$W_{parapet}$	0.00		0.50		0.00	0.00
Soil Pressure						
$(P_{AB})_v$	0.29		6.04		1.74	1.74
$(P_{AB})_h$		0.65	5.29	3.43		
$(P_{BC1})_v$	-0.11		4.88		-0.52	-0.52
$(P_{BC1})_h$		0.43	1.50	0.64		
$(P_{BC2})_v$	-0.04		4.88		-0.19	-0.19
$(P_{BC2})_h$		0.16	0.83	0.13		
P_{surch}		0.57	4.44	2.51		
TOTALS =	7.50	1.80		6.72	19.45	22.86

AASHTO LRFD C11.6.3.3 states: The specified criteria for the location of the resultant, coupled with investigation of the bearing pressure, replaces the investigation of the ratio of stabilizing moment to overturning moment. See Section III Soil Bearing Pressure.

Anchor 3			
SOIL PROPERTY	**DESCRIPTION**	**VALUE section AB**	**VALUE section BC**
ϕ	friction angle of soil	32	32
θ	angle of wall to the y-axis	0	30
δ	wall-soil friction angle *(measured from a perpendicular with the wall)* =0, if significant vibrations of backfill or mod settling more than backfill. = 0.5*ϕ, if modules are uniform width. = 0.75*ϕ, if averaged pressure surface	24	16
x	side slopes from road (x:1)	1.5	
α	wingwall angle (angle w/ perpendicular to road)	41	
	slope of backfill (perpendicular to wall)	3.60	
β	angle of backfill (perpendicular to wall)	15.5	15.5
	$(K_a)_{AB}$ =	0.34	$(K_a)_{BC}$ = 0.12

Anchor 3

VARIABLE	DESCRIPTION OF VARIABLE	VALUE	
H	wingwall design height at anchor location (feet)	7.50	
h_{surch}	height of live load surcharge (feet)	2.00	
t	thickness of wingwall (inches)	12	
δ	wall friction angle for section AB	24	
β	angle of backfill (degrees)	15.5	
L	length of anchor (feet)	5.04	C
γ_s	unit weight of backfill (kcf)	140	
γ_c	unit weight of concrete (kcf)	150	
γ_{surch}	unit weight of surcharge (kcf)	120	*(per AASHTO LRFD 3.11.6.4)*

Description	Vertical Reaction (k/ft)	Horizontal Reaction (k/ft)	Lever Arm (ft)	Disturbing Moment (ft-k/ft)	"Stability" Resisting Moment (ft-k/ft)	"Bearing" Resisting Moment (ft-k/ft)
wall (W_w)	1.12		0.50		0.56	0.56
soil I_A	0.49		4.36		1.72	2.15
soil I_B	2.82		3.52		7.95	9.93
soil II_A	1.10		2.13		1.87	2.34
soil II_B	0.68		4.02		2.20	2.75
$W_{surcharge}$	1.21		3.52		4.26	4.26
$W_{parapet}$	0.00		0.50		0.00	0.00
Soil Pressure						
$(P_{AB})_v$	0.28		6.04		1.71	1.71
$(P_{AB})_h$		0.64	5.30	3.38		
$(P_{BC1})_v$	-0.11		4.88		-0.51	-0.51
$(P_{BC1})_h$		0.42	1.50	0.63		
$(P_{BC2})_v$	-0.04		4.88		-0.19	-0.19
$(P_{BC2})_h$		0.16	0.83	0.13		
P_{surch}		0.56	4.45	2.50		
TOTALS =	7.57	1.78		6.64	19.57	23.00

AASHTO LRFD C11.6.3.3 states: The specified criteria for the location of the resultant, coupled with investigation of the bearing pressure, replaces the investigation of the ratio of stabilizing moment to overturning moment. See Section III Soil Bearing Pressure.

II. CHECK OVERTURNING STABILITY AT CONNECTION PLATES

The connection plates provide stability for the portion of the wall not supported by the anchors, i.e., the section closest to the culvert. (See wingwall sketch)

Data:

number of plates = 2

ϕ = 32

δ = 24

γ_s = 0.140 kcf

$\gamma_{(surcharge)}$ = 0.120 kcf

wall height @ plates (H) = **7.58 ft**

Live load surcharge (h) = **2.00 ft**

section width for plates (S) = 2.0 ft

y_{Psh} = H/3 = 2.5 ft

y_{PLL} = H/2 = 3.8 ft

y_{p1} = **0.75 ft**

y_{p2} = **4.75 ft**

A_{bolt} = 0.79

t_{plate} = 1.00 in

$\phi F_{(bolt)}$ = 30 ksi

$F_{y(plate)}$ = 36 ksi

Find soil pressure on section:

Because the wall is more rigid at the plates, at-rest soil pressure coefficient (K_o) is used.

$K_o = 1\text{-}\sin\phi = 0.47$ *(AASHTO LRFD eq. 3.11.5.2-1)*

$P_{sh} = (^1/_2)\gamma_s K_o H^2(S)(\cos\delta) = 3.45$ K

$P_{LLh} = K_o\gamma_s HhS(\cos\delta) = 1.56$ K

$P_{impact} = P_{imp}S/L_{distr} = 0$

Find reaction at plate:

Sum moments about bottom plate, p_1

$\Sigma M_{p1} = 0 = P_{sh}(y_{Psh} - y_{p1}) - p_2(y_{p2} - y_{p1})$ *(dead load)*

$\Sigma M_{p1} = 0 = P_{LL}(y_{PLL} - y_{p1}) - p_{2LL}(y_{p2} - y_{p1}) + P_{imp}(y_{imp} - y_{p1})$ *(live load)*

$p_2 = \dfrac{P_{sh}(y_{Psh} - y_{p1})}{(y_{p2} - y_{p1})} = 1.53$ K $\qquad p_1 = P_{sh} - p_2 = 1.92$ K

$p_{2LL} = \dfrac{P_{LLh}(y_{pLL} - y_{p1}) + P_{imp}(y_{imp} - y_{p1})}{(y_{p2} - y_{p1})} = 1.19$ K $\qquad p_{1LL} = P_{LL} + P_{imp} - p_{2LL} = 0.37$ K

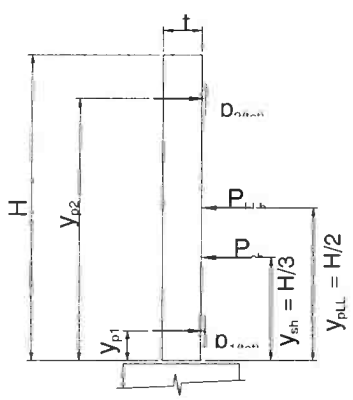

Find factored reaction:

Load factors are per AASHTO LRFD 3.4.1-1 & Table 3.4.1-2

$p_{fac} = \gamma p_{max(DL)} + (1.75)p_{max(LL)}$

$p_{fac} = (1.35)p_{(DL)} + (1.75)p_{(LL)}$

$p_{1(tot,\ factored)} = 3.25$ K

$p_{2(tot,\ factored)} = 4.15$ K ***Controls***

$p_{(max,\ factored)} = 4.15$ K

Check bolts:

The special Richmond Screw Anchor *"wingwall insert" pullout capacity was obtained from the manufacturer and has approx. 3:1 safety factor.*

Pullout capacity = 16.5 k/bolt ***Controls***

Bolt tension = $\phi F A_{bolt}$ = 23.7 k/bolt

$F.S. = \dfrac{\text{Capacity* 2 bolts}}{(p_{fac})} = 7.95$ *> 1.0, OK*

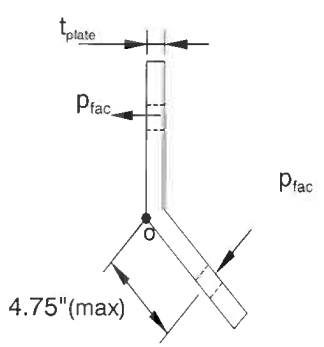

Check bending of plate:

Sum moments about corner of plate, point "o"

$\Sigma M_o = (p_{fac})(4.75") = 19710$ lb-in

$I_{pl} = bh^3/12 = 0.83$ in^4

$\sigma_{max} = \dfrac{My}{I_{pl}} = 12$ ksi $\quad < \phi F_y = 0.9F_y$ *OK*

(AISC LRFD-F2 states $\phi_b = 0.9$)

length of connection plate is 10"

III. CHECK SOIL BEARING PRESSURE AND SLIDING UNDER CAST-IN-PLACE FOOTING

The reaction will be supported on the horizontal portion of the anchor plus the footing.

R_v = Total vertical reaction at anchor (using 100% of soil weight).

R_h = Total horizontal reaction at anchor.

M_D = Disturbing moment at anchor.

M_{Rb} = Resisting moment due to 100% of soil at anchor.

Summary of loads at anchors

anchor	anchor base length	R_v ($^K/_F$)	R_h ($^K/_F$)	M_D ($^{K\text{-}F}/_F$)	M_{Rb} ($^{K\text{-}F}/_F$)
1	2.73	7.43	1.83	6.82	22.74
2	2.73	7.50	1.80	6.72	22.86
3	2.73	7.57	1.78	6.64	23.00
4	1.73	0.00	0.00	0.00	0.00
5	4.73	0.00	0.00	0.00	0.00

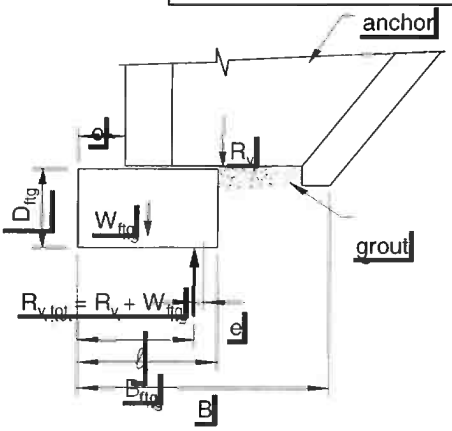

Check the bearing pressure under the wall

D_{ftg} = 5.0 ft

B_{ftg} = 2.5 ft

o = 9 in

W_{ftg} = 1.88 klf

Q_{allow} = 3.0 KSF

$R_{v,tot}$ = total vertical reaction ($R_v + W_{ftg}$)

B = bearing width

= maximum of (anchor base length + o) or B_{ftg}

ℓ = location of vertical resultant ($R_{v,tot}$) along bearing width

$$= \frac{R_v((M_{Rb}-M_D)/R_v + o) + W_{ftg}(B/2)}{R_{v,tot}}$$

e = eccentricity of resultant

= B/2 - ℓ

B' = adjusted bearing width

= B - 2e

q = bearing pressure *(must be less than Q_{allow})*

= $R_{v,tot}$ / B'

Check bearing pressure at each anchor

anchor	B (ft)	ℓ (ft)	e	check e	B' (ft)	q	check q
1	4.48	2.56	-0.32	*OK*	3.84	2.42	*OK*
2	4.48	2.57	-0.33	*OK*	3.82	2.46	*OK*
3	4.48	2.58	-0.34	*OK*	3.80	2.49	*OK*
4	0.00	0.00	0.00	*n/a*	0.00	0.00	*n/a*
5	0.00	0.00	0.00	*n/a*	0.00	0.00	*n/a*

Check the sliding factor of safety

$R_R = \phi * R_{V,tot} * .8 * \tan \phi$ *(AASHTO LRFD 10.6.3.4)*

(must be >R_h)

ϕ = 0.9 *from AASHTO LRFD Table 10.5.5.2.2-1 for precast concrete on sand*

Check sliding at each anchor

anchor	$R_{v,tot}$ (k/f)	R_R (k/f)	R_h	check $R_R > R_h$
1	9.31	4.19	1.83	*OK*
2	9.38	4.22	1.80	*OK*
3	9.45	4.25	1.78	*OK*
4	0.00	0.00	0.02	*n/a*
5	0.00	0.00	0.02	*n/a*

IV. CHECK BENDING OF FOOTING CROSS SECTION

Bending need not be considered in footings when the footing depth, D, exceeds the projection, pr, of the footing beyond the edge of the wall.

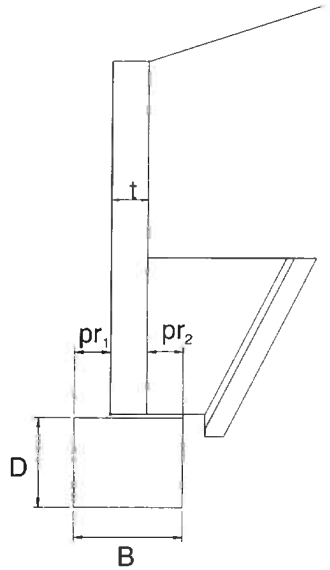

pr_1 = offset(o) = 9 in

pr_2 = B - o - t = 9 in **Controls**

pr_{max} = 9 in

projection < D *OK*

Use minimal steel stirrups
#4 @ 48 inches o.c.

V. CHECK WALL SECTION - BENDING AND SHEAR (vertical bars)

Assumptions: 1. *Wall stem is cantilevered from anchor.*
2. *Use active earth pressure because wall can deflect at top.*
3. *Use K_a and δ from Anchor Stability Calculations.*

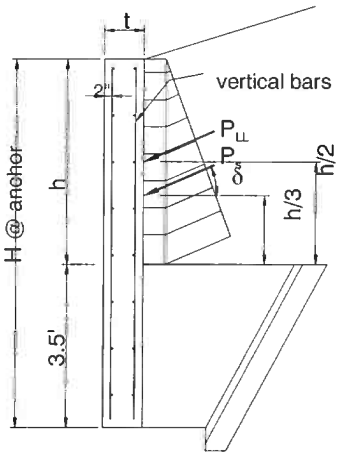

Horizontal loads:

$P_{sh} = (^1/_2)\gamma_s K_a h^2(\cos\delta)$

$P_{LLh} = \gamma_s K_a h(h_{surcharge})(\cos\delta)$

$P_{impact} = P_{imp}/L_{distr}$

Factored forces:

Load factors are per AASHTO LRFD 3.4.1-1 & Table 3.4.1-2

M_u = Section width$[(1.35)P_{sh}(h/3) + (1.75)P_{LLh}(h/2) + (1.75)P_{imp}(h+y_{imp})]$

V_u = Section width$[(1.35)P_{sh} + (1.75P_{LLh} + (1.75P_{imp}]$

Summary of forces at anchors

anchor	H (ft)	h (ft)	$h_{surcharge}$ (ft)	P_{sh} (k/ft)	P_{LLh} (k/ft)	P_{imp} (k/ft)	M_u (k-ft)	V_u (k)
1	7.23	3.73	2.00	0.32	0.29	0.00	7.47	4.73
2	7.36	3.86	2.00	0.33	0.30	0.00	7.92	4.85
3	7.50	4.00	2.00	0.35	0.30	0.00	7.55	4.49
4	0.00	0.00	2.00	0.00	0.00	0.00	0.00	0.00
5	0.00	0.00	2.00	0.00	0.00	0.00	0.00	0.00

Check bending (reinforcment) at anchors

f'_c = **5000 psi**

f_y = **60000 psi**

ϕ_b = **0.9** *(AASHTO LRFD 5.4.2.1)*

$m = f_y/0.85f'_c$ = 14.12

d = 9.75 in

b = anchor's contrib. width

$$R_u = \frac{M_u}{\phi_b b d^2}$$

$$\rho_{reqd} = \frac{1}{m}\left(1-\sqrt{1-\frac{2mR_u}{f_y}}\right)$$

ρ_{min} = *AASHTO LRFD 5.7.3.3.2 states the minimum reinforcement is the lesser of 1.2Mcr OR 1.33 times the factored moment required by strength.*

anchor	R_u (psi)	ρ_{reqd}	ρ_{cr}	ρ_{min}	$A_{s\ min}$ (in^2)	$A_{s\ actual}$ (in^2)	check
1	17	0.0003	0.0030	0.0004	0.22	1.04	OK
2	19	0.0003	0.0030	0.0004	0.24	1.04	OK
3	20	0.0003	0.0030	0.0004	0.22	0.98	OK
4	0	0.0000	0.0030	0.0000	0.00	#VALUE!	N/A
5	0	0.0000	0.0030	0.0000	0.00	#VALUE!	N/A

Check shear

$V_c = (.0316)*\beta \sqrt{f'_c}\, b_v d_v$ *(V_c calculated by AASHTO LRFD eq'n 5.8.3.3-3)*

$\phi = 0.9$ *(AASHTO LRFD 5.5.4.2.1)*

$\beta = 2$ *(AASHTO LRFD 5.8.3.4.1)*

$d_v = .9*d$ or $.72*t$ *whichever is greater (AASHTO LRFD 5.8.2.9)*

anchor	ϕV_c	check $V_u < \phi V_c$
1	66.96	*OK*
2	66.96	*OK*
3	60.27	*OK*
4	0.00	*N/A*
5	0.00	*N/A*

VI. CHECK TYPE 'C' ANCHOR ATTACHMENT

Check capacity of connector for pullout (truncated pyramid failure), shear, tension, and combined shear & tension

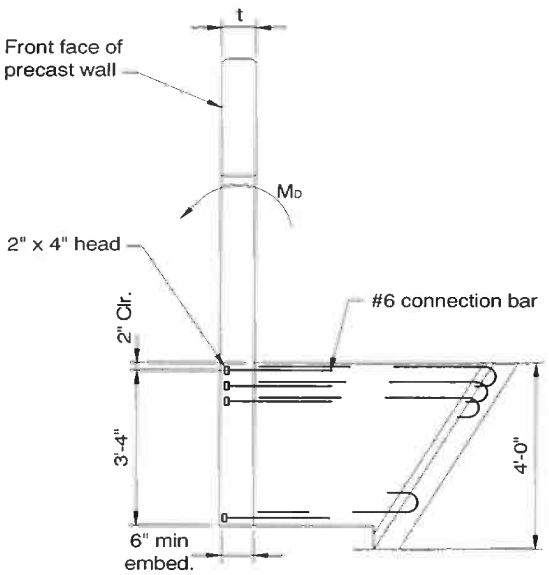

embedment depth (l_e) = **6 in**

Attachment depth = 42 in
X head dimension (Xd_{head}) = 3 in
Y head dimension (Yd_{head}) = 3 in
Bar size = **# 6**
rows = **3**
row spacing = **5 in**
wall thickness (t) = 12 in
x = Xd_{head} (*since only 1 column*) = 3 in
y = (#rows-1)(row spacing) + Yd_{head} = 13 in

z = min(x,y) = 3 in
h_{min} = (z + 2l_e)/2 = 7.5 in
A_R = (x+2l_e-2t)(y+2l_e-2t) = -9.0 in^2

f'_c = **5000 psi**
f_y = **60000 psi**
$\phi_{concrete}$ = 0.85
ϕ_{steel} = 0.90

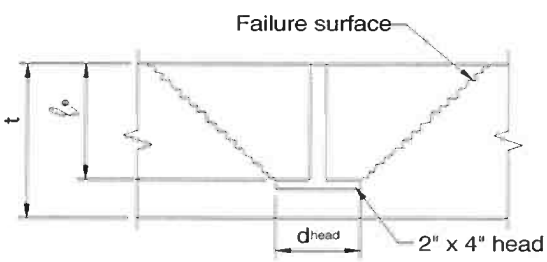

TENSION CAPACITY (Per PCI Design Handbook §6.5.2.1)

t > hmin: failure surface does not penetrate slab

Find pullout capacity of concrete

if t >= h_{min}, ϕP_c = ϕ2.67sqrt(f'c)(x+2l_e)(y+2l_e)

if t < h_{min}, ϕP_c = ϕ2.67sqrt(f'c)[(x+2l_e)(y+2l_e) - A_R]

ϕP_c = 60.18 K

Find tension capacity of studs

ϕP_y = $\phi f_y(A_{bar})$(#bars)

ϕP_y = 71.57 K

controlling tension capacity (ϕP) = 60.18 K

Find moment capacity of anchor

Moment capacity of anchor (ϕM_n) = ϕP(d-a/2)

d = attachment depth - bar cover - (y-Yd_{head})/2 = 35 in

a = $A_s f_y$/0.85f'_cb = 3.12 in

ϕM_n = 167.70 k-f

SHEAR CAPACITY (Per PCI Design Handbook §6.5.2.2)

Find shear capacity of concrete

$\phi V_c = \phi V'_c C_w C_t C_c$

$\phi V'_c = \phi 12.5 d_e^{1.5} \text{sqrt}(f'_c)$	= 187.4 K
$C_w = 1 + \text{spacing}/3.5d_e < \#\text{columns}$	= 1.0
$C_t = t/1.3d_e <= 1.0$	= 0.23
$C_c = 0.4 + 0.7d_c/de <= 1.0$	= 0.9
d_e = attachment depth - cover - bar dia/2	= 40 in
d_c = distance to side of wingwall	= 30 in

$\phi V_c = \phi V'_c C_w C_t C_c =$ 40.60 K

Find shear capacity of studs

$\phi V_y = \phi 0.9 f_y A_{bar}(\#\text{bars})$

ϕV_y = 64.41 K

controlling shear capacity (ϕV) = 40.60 K

FIND LOADS

Unfactored loads on anchors:

$M_{D(DL)}$ = (sec width)$M_{D(anchor)}$

$M_{D(LL)}$ = (sec width)($M_{D(anchor)}$ + P_{imp}*(wall ht + y_{imp}))

Factored loads:

Load factors are per AASHTO 3.22.1 & Table 3.22.1A

$M_u = (1.3)(1.3)M_{D(DL)} + (1.3)(1.67)M_{D(LL)}$

$P_u = M_u /(d\text{-}a/2)*\cos(\text{bar angle})$

$V_u = M_u /(d\text{-}a/2)*\sin(\text{bar angle})$

bar angle = 0°

Summary of forces

anchor	$M_{D(DL)}$ ft-k	$M_{D(LL)}$ ft-k	M_u ft-k	P_u k	V_u k
1	21.5	12.6	63.7	22.9	0.0
2	21.1	12.6	62.8	22.5	0.0
3	18.6	11.3	55.9	20.1	0.0
4	0.0	0.0	0.0	0.0	0.0
5	0.0	0.0	0.0	0.0	0.0

Summary of results

anchor	check $\phi M_n > M_u$	check $\phi P > P_u$	check $\phi V > V_u$	check combined V_c & P_c	check combined V_s & P_s
1	*OK*	*OK*	*OK*	*OK*	*OK*
2	*OK*	*OK*	*OK*	*OK*	*OK*
3	*n/a*	*OK*	*OK*	*OK*	*OK*
4	*n/a*	*n/a*	*n/a*	*n/a*	*n/a*
5	*n/a*	*n/a*	*n/a*	*n/a*	*n/a*

Section 9
Guardrail Curb
Calculations

REFERENCE:

AASHTO LRFD Bridge Design Specifications, Section 13 - Railings, Design Force TL-4

DESIGN PARAMETERS:

$f_c := 5000 \quad psi$ $\quad f_y := 60000 \cdot psi$ $\quad \gamma_e := 140 \cdot \frac{lbf}{ft^3}$ unit weight of earth

$\gamma_c := 150 \cdot \frac{lbf}{ft^3}$ unit weight of concrete $\quad K_{max} := .75$ max. earth pressure coefficient

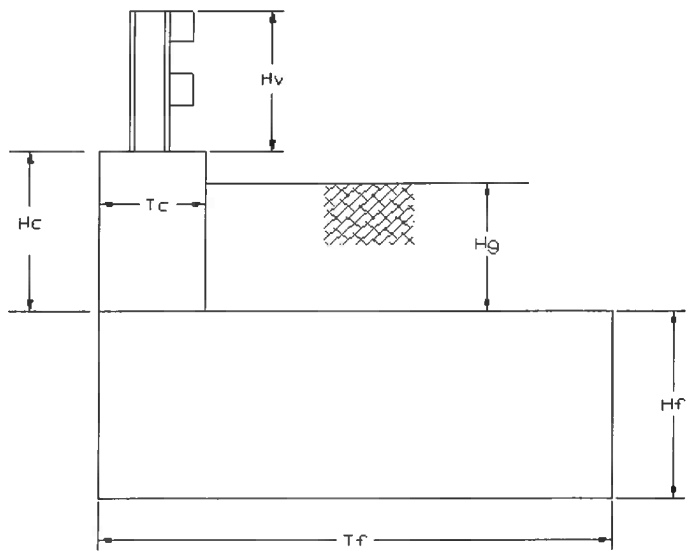

GEOMETRY: Guardrail curb for C-1

$Hc := 17\ in$	height of curb (max)	$Hg := 17\ in$	height to grade
$Tc := 20 \cdot in$	curb thickness (min)	$Hf := 6.0 \cdot ft$	height of frame
$Tf := 4.29 \cdot ft$	frame length	$c := 3 \cdot in$	bar clear distance
$F_{ll} := 54000 \cdot lbf$	TL-4 Impact Load	$L_t := 3.5\ ft$	Longitudinal length of distribution of impact force
$db := 0.625 \cdot in$	bar diameter	$d := Tc - c - \frac{db}{2} = 16.688\ in$	
		$H := 32\ in$	min. barrier height

LOAD & RESISTANCE FACTORS

$\gamma_{EH} := 1.5$	horiz. earth	$\gamma_{LL} := 1.75$	Live Load
$\gamma_{EV} := 1.35$	Vert. earth	$\gamma_{DC} := 1.25$	Dead Load of Structural Component

LOADING: $\gamma_{LLE} := .5$ Extreme Event II Live Load

Lateral Earth Pressure:

$$F_e := \gamma_{EH} \cdot K_{max} \cdot \gamma_e \cdot \frac{Hg^2}{2} \cdot ft = 158.05\ lbf$$

Vehicular Impact:

$F_v := \gamma_{LLE} \cdot F_{ll} = (2.7 \cdot 10^4)\ lbf$ $S_p := 7.5\ ft$ post spacing

$$LL := F_v \cdot \left(\frac{S_p - \frac{L_t}{4}}{S_p} \right) = (2.385 \cdot 10^4)\ lbf$$ force at one post

$G := 28 \cdot in$ height of vehicle CG

$W := 18000 \cdot lbf$ weight of vehicle

$B := 6.5 \cdot ft$ out-to-out wheel spacing

$$H_v := G - \frac{W \cdot B}{2 \cdot F_{ll}} = 15\ in$$ height of vehicle impact

Overturning:

$$M_o := F_e \cdot \left(\left(\frac{Hg}{3} \right) + Hf \right) + F_v \cdot (Hc + H_v + Hf) = (2.35 \cdot 10^5)\ ft \cdot lbf$$

$Wt_{frame} := \gamma_{DC} \cdot 49560 \cdot lbf$ Frame weight $CG_{frame} := \frac{Tf}{2} = 2.145\ ft$

$Wt_{headwall} := \gamma_{DC} \cdot Hc \cdot Tc \cdot \gamma_c \cdot ft = 442.708\ lbf$ $CG_{headwall} := \frac{Tc}{2} = 0.833\ ft$

$Wt_{fill} := \gamma_{EV} \cdot (Hg \cdot (Tf - Tc)) \cdot \gamma_e \cdot ft = 702.398\ lbf$ $CG_{fill} := \left(\frac{Tf - Tc}{2} + Tc \right) = 2.978\ ft$

$$M_{RES} := Wt_{frame} \cdot CG_{frame} + Wt_{fill} \cdot CG_{fill} + Wt_{headwall} \cdot CG_{headwall} = (1.353 \cdot 10^5)\ ft \cdot lbf$$

$$CDR := \frac{M_{RES}}{M_o} = 0.576$$

$$\text{if}(CDR \geq 1.0, \text{"OK"}, \text{"OK with CIP joint"}) = \text{"OK with CIP joint"}$$

Shear Friction LRFD 5.8.4 $\phi := .9$ $c := 75\ \frac{lbf}{in^2}$ $\mu := .6$

$A_{cv} := 2.76\ ft^2$ $A_{vf} := .88\ in^2$ $f_y = (6 \cdot 10^4)\ psi$

$K_1 := .2$ $K_2 := 800\ \frac{lbf}{in^2}$ $f_c := 5000\ \frac{lbf}{in^2}$

$V_{ni} := c \cdot A_{cv} + \mu \cdot A_{vf} \cdot f_y = (6.149 \cdot 10^4)\ lbf$

$V_{nimax} := min(V_{ni}, K_1 \cdot f_c \cdot A_{cv}, K_2 \cdot A_{cv}) = (6.149 \cdot 10^4)\ lbf$

$V_{ri} := \phi \cdot V_{nimax} = (5.534 \cdot 10^4)\ lbf$ $CDR := \frac{V_{ri}}{LL} = 2.32$

$\text{if}(CDR \geq 1.0, \text{"OK"}, \text{"increase steel area"}) = \text{"OK"}$

Moments $b_v := L_t = 3.5\ ft$

$M_{oEXTR} := F_e \cdot \left(\left(\frac{Hg}{3}\right) + Hf\right) + LL \cdot (Hc + H_v) = (6.462 \cdot 10^4)\ ft \cdot lbf$

$A_s := 0.88 \cdot in^2$ **Area required** **#6 @ 6"** $f_c := 5000\ psi$

$f_y := 60000$ $a := \frac{A_s \cdot f_y}{.85 \cdot f_c \cdot b_v} = 0.296\ in$ $f_y := 60000 \cdot psi$

$\phi M_n := .95 \cdot A_s \cdot f_y \cdot \left(d - \frac{a}{2}\right) = (6.914 \cdot 10^4)\ ft \cdot lbf$

$\text{if}(\phi M_n \geq M_{oEXTR}, \text{"OK"}, \text{"NG"}) = \text{"OK"}$

Distribution Reinforcement

$A_{sMin} := .002 \cdot 12 \cdot in \cdot \frac{Tc}{2} = 0.24\ in^2$ **Use #5 @ 12"**

GEOMETRY: Attached guardrail curb for C-1

$Hc := 2.11 \cdot ft$ height of curb (max)

$Hg := 2.11 \cdot ft$ height to grade

$Tc := 19.1 \cdot in$ curb thickness (min)

$Hf := 6.0 \cdot ft$ height of frame

$Tf := 4.29 \cdot ft$ frame length

$c := 2 \cdot in$ bar clear distance

$F_{ll} := 54000 \cdot lbf$ TL-4 Impact Load

$L_t := 3.5\ ft$ Longitudinal length of distribution of impact force

$db := 0.625 \cdot in$ bar diameter

$d := Tc - c - \frac{db}{2} = 16.788\ in$

$H := 32\ in$ min. barrier height

LOAD & RESISTANCE FACTORS

$\gamma_{EH} := 1.5$ horiz. earth

$\gamma_{LL} := 1.75$ Live Load

$\gamma_{EV} := 1.35$ Vert. earth

$\gamma_{DC} := 1.25$ Dead Load of Structural Component

$\gamma_{LLE} := .5$ Extreme Event II Live Load

LOADING:

Lateral Earth Pressure:

$$F_e := \gamma_{EH} \cdot K_{max} \cdot \gamma_e \cdot \frac{Hg^2}{2} \cdot ft = 350.6\ lbf$$

Vehicular Impact:

$F_v := \gamma_{LLE} \cdot F_{ll} = (2.7 \cdot 10^4)\ lbf$ $S_p := 7.5\ ft$ post spacing

$$LL := F_v \cdot \left(\frac{S_p - \frac{L_t}{4}}{S_p} \right) = (2.385 \cdot 10^4)\ lbf$$ force at one post

$G := 28 \cdot in$ height of vehicle CG

$W := 18000 \cdot lbf$ weight of vehicle

$B := 6.5 \cdot ft$ out-to-out wheel spacing

$H_v := G - \frac{W \cdot B}{2 \cdot F_{ll}} = 15\ in$ height of vehicle impact

Overturning:

$$M_o := F_e \cdot \left(\left(\frac{Hg}{3} \right) + Hf \right) + F_v \cdot (Hc + H_v + Hf) = (2.551 \cdot 10^5)\ ft \cdot lbf$$

$Wt_{frame} := \gamma_{DC} \cdot 49560 \cdot lbf$ Frame weight $CG_{frame} := \frac{Tf}{2} = 2.145\ ft$

$Wt_{headwall} := \gamma_{DC} \cdot Hc \cdot Tc \cdot \gamma_c \cdot ft = 629.703\ lbf$ $CG_{headwall} := \frac{Tc}{2} = 0.796\ ft$

$Wt_{fill} := \gamma_{EV} \cdot (Hg \cdot (Tf - Tc)) \cdot \gamma_e \cdot ft = (1.076 \cdot 10^3)\ lbf$ $CG_{fill} := \left(\frac{Tf - Tc}{2} + Tc\right) = 2.941\ ft$

$M_{RES} := Wt_{frame} \cdot CG_{frame} + Wt_{fill} \cdot CG_{fill} + Wt_{headwall} \cdot CG_{headwall} = (1.365 \cdot 10^5)\ ft \cdot lbf$

$CDR := \frac{M_{RES}}{M_o} = 0.535$

$\text{if}(CDR \geq 1.0, \text{"OK"}, \text{"OK with CIP joint"}) = \text{"OK with CIP joint"}$

Shear Friction LRFD 5.8.4

$\phi := .9$ $c := 75\ \frac{lbf}{in^2}$ $\mu := .6$

$A_{cv} := 2.76\ ft^2$ $A_{vf} := 1.06\ in^2$ $f_y = (6 \cdot 10^4)\ psi$

$K_1 := .2$ $K_2 := 800\ \frac{lbf}{in^2}$ $f_c := 5000\ \frac{lbf}{in^2}$

$V_{ni} := c \cdot A_{cv} + \mu \cdot A_{vf} \cdot f_y = (6.797 \cdot 10^4)\ lbf$

$V_{nimax} := min(V_{ni}, K_1 \cdot f_c \cdot A_{cv}, K_2 \cdot A_{cv}) = (6.797 \cdot 10^4)\ lbf$

$V_{ri} := \phi \cdot V_{nimax} = (6.117 \cdot 10^4)\ lbf$ $CDR := \frac{V_{ri}}{LL} = 2.565$

$\text{if}(CDR \geq 1.0, \text{"OK"}, \text{"increase steel area"}) = \text{"OK"}$

Moments

$M_{oEXTR} := F_e \cdot \left(\left(\frac{Hg}{3}\right) + Hf\right) + LL \cdot (Hc + H_v) = (8.249 \cdot 10^4)\ ft \cdot lbf$

$A_s := 1.06 \cdot in^2$ **Area required** **#6 @ 5"** $f_c := 5000\ psi$

$f_y := 60000$ $a := \frac{A_s \cdot f_y}{.85 \cdot f_c \cdot b_v} = 0.356\ in$ $f_y := 60000 \cdot psi$

$\phi M_n := .95 \cdot A_s \cdot f_y \cdot \left(d - \frac{a}{2}\right) = (8.363 \cdot 10^4)\ ft \cdot lbf$

$\text{if}(\phi M_n > M_{oEXTR}, \text{"OK"}, \text{"NG"}) = \text{"OK"}$

Distribution Reinforcement

$$A_{sMin} := .002 \cdot 12 \cdot in \cdot \frac{Tc}{2} = 0.229\ in^2$$

Use #5 @ 12"

Section 10
Approach Slab Shelf
Calculations

REFERENCE:
AASHTO LRFD Bridge Design Specifications

DESIGN PARAMETERS:

$f_c := 5000 \quad psi$ $\quad f_y := 60000 \cdot psi$ $\quad \gamma_e := 140 \cdot \frac{lbf}{ft^3}$ unit weight of earth

$\gamma_c := 150 \cdot \frac{lbf}{ft^3}$ unit weight of concrete $\quad K_{max} := .75$ max. earth pressure coefficient

GEOMETRY: Guardrail curb for C-1

$L := 25$ length of slab (ft) $\quad L_1 := min(L, 60) = 25$ modified slab length

$W := 34.58$ edge to edge width of bridge (ft) $\quad W_1 := min(W, 60) = 34.58$ modified bridge width

$t := 16\ in$ slab thickness $\quad t_{pav} := 3 \cdot in$ pavemant thickness

$N_l := 2$ number of lanes loaded $\quad Tf := 4.29 \cdot ft$ frame length

$E := 84 + 1.44 \cdot \sqrt{L_1 \cdot W_1} = 126.339$ live load distribution (multiple lanes)

$E_1 := min\left(E, \frac{12 \cdot W}{N_l}\right) = 126.339$ live load distribution (multiple lanes)

LOAD & RESISTANCE FACTORS

$\gamma_{EH} := 1.5$ horiz. earth $\quad \gamma_{LL} := 1.75$ Live Load

$\gamma_{EV} := 1.35$ Vert. earth $\quad \gamma_{DC} := 1.25$ Dead Load of Structural Component

LOADING:

Dead Load:

$W_{slab} := \gamma_c \cdot t \cdot 1\ ft = 200\ \frac{lbf}{ft}$ slab weight

$W_{pav} := \gamma_c \cdot t_{pav} \cdot 1\ ft = 37.5\ \frac{lbf}{ft}$ pavement weight

$w_{dead} := \gamma_{DC} \cdot (W_{slab} + W_{pav}) = 296.875\ \frac{lbf}{ft}$ strength 1 dead load

Live Load: $t_{pav} := \frac{t_{pav}}{1\ in} = 3$

$w_{lane} := 64 \cdot \frac{lbf}{ft}$ lane load

Multiple presence factor $M := 1.2$ $F_{tr} := 32000 \cdot lbf$ truck axle load

$Im := 33 \cdot (1.0 - 0.125 \cdot t_{pav}) = 20.625$ Dynamic load allowance $I_i := 1 + \frac{Im}{100} = 1.206$

$I := \max(1, I_i) = 1.206$

$P_{tr} := \frac{M \cdot I \cdot F_{tr}}{E_1 \cdot 1\ ft} = 366.631\ \frac{1}{ft} \cdot lbf$ truck load

$w_{live} := \gamma_{LL} \cdot w_{lane} = 112\ \frac{lbf}{ft}$ strength 1 lane load

$P_{live} := \gamma_{LL} \cdot P_{tr} = 641.605\ \frac{lbf}{ft}$ strength 1 truck load

Strength 1 Design Load:

$R := \frac{(w_{dead} + w_{live}) \cdot L}{2} + P_{live} = (5.753 \cdot 10^3)\ \frac{lbf}{ft}$ reaction on shelf

Shear Friction LRFD 5.8.4 $\phi := .9$ $c := 75\ \frac{lbf}{in^2}$ $\mu := .6$

$A_{cv} := 288\ in^2$ $A_{vf} := .62\ in^2$ $f_y = (6 \cdot 10^4)\ psi$

$K_1 := .2$ $K_2 := 800\ \frac{lbf}{in^2}$ $f_c := 5000\ \frac{lbf}{in^2}$

$V_{ni} := c \cdot A_{cv} + \mu \cdot A_{vf} \cdot f_y = (4.392 \cdot 10^4)\ lbf$

$V_{nimax} := min(V_{ni}, K_1 \cdot f_c \cdot A_{cv}, K_2 \cdot A_{cv}) = (4.392 \cdot 10^4)\ lbf$

$V_{ri} := \phi \cdot V_{nimax} = (3.953 \cdot 10^4)\ lbf$ $CDR := \frac{V_{ri}}{R \cdot 1\ ft} = 6.871$

$\text{if}(CDR \geq 1.0, \text{“OK”}, \text{“increase steel area”}) = \text{“OK”}$

Section 11
Bridge Load Rating

Description	Pages
Summary	1
Mathcad Calculations: 42.42' x 4.583' Rigid Bridge, 0'-2' Earth Cover, HL93 & Vermont Permit Loads	12
STAAD PRO Output: 42.42' x 4.583' Rigid Bridge, 0'-2' Earth Cover, HL93 & Vermont Permit Loads	52
TOTAL PAGES	65

Section 9
Bridge Load Rating

Description	Pages
Summary	1
Mathcad Calculations: 42.42' x 4.583' Rigid Bridge, 0'-2' Earth Cover, HL93 & Vermont Permit Loads	12
STAAD PRO Output: 42.42' x 4.583' Rigid Bridge, 0'-2' Earth Cover, HL93 & Vermont Permit Loads	52
TOTAL PAGES	65

Proposed Improvement Project Bridge No 24; Woodstock, VT

03/01/16

LRFR LOAD RATING FACTORS

LOADING LEVELS	TRUCK						
	H-20	HL-93	3SC	6 AXLE	3A. STR.	4A. STR.	5A. SEMI.
TONNAGE	20	36	36	66	30	34.5	38
INVENTORY	1.48	1.06					
POSTING							
OPERATING	1.92	1.37	1.47	1.70	1.85	1.66	2.26

42.42ft x 4.583ft Box Culvert;
Design Input Data for STAAD.Pro Analysis; HL93 Live Load; Earth Cover C=0ft-2ft

Reference Dwg: R22624-LO1

REFERENCE:
AASHTO The Manual for Bridge Evaluation 2nd Edition 2011

Design Parameters:

$\gamma_w := 62.4\frac{lbf}{ft^3}$ unit weight of water

$\gamma_c := 150\frac{lbf}{ft^3}$ unit weight of concrete

$\gamma_e := 140\frac{lbf}{ft^3}$ unit weight of earth

$DE_1 := 0.0$ ft Depth of earth Cover -Min

$DE_2 := 2.0$ ft Depth of earth Cover -Max

$DE_{ave} := \frac{DE_1 + DE_2}{2} = 1$ ft

$L_T := 10in$ Length of tire contact area -parallel to span

$K_{max} := .5$ max. earth pressure coefficient

$LLDF := 1.0$ factor for distribution of live load with depth of fill

$K_{min} := .25$ min. earth pressure coefficient

Geometry:

$ClearSpan := 42.42ft$ ClearSpan

$ClearRise := 4.583ft$ ClearRise

Member Properties:

$b := 12in$ design section width

$t_{tMin} := 17in$ Min. top slab thickness

$t_{wMin} := 18in$ Min wall thickness

$t_{tMax} := 22in$ Max.top slab thickness at the Intersection with the Wall

$t_{wMax} := 25in$ Max wall thickness

$Span := ClearSpan + t_{wMin} = 43.92ft$

$L_{Section} := 7.5ft$ Section Length

$Rise := ClearRise + t_{tMin} - t_{tMax} = 4.17ft$ Dimension to Calculate Soil Pressure for the Model

$t_{Min} := \frac{ClearSpan + 10ft}{30} = 1.747ft$ Estimate Slab Thickness AASHTO Table 2.5.2.6.3-1

$F_e := 1 + 0.2\frac{DE_{ave} \cdot ft}{ClearSpan + 2t_{wMin}} = 1.004$ **Soil-Structure Interaction Factor** AASHTO Eqn 12.11.2.2.1-2

$F_{emax} := \min(F_e, 1.15) = 1.004$

Dead Load: (DC)

$D_{pav} := F_{emax} \cdot \gamma_e DE_{ave} \cdot ft \cdot 1ft = 140.616 \cdot \frac{lbf}{ft}$ Dead load

9 Commercial Street
Hudson, NH
(800) 342-3374
Fax (603) 598-1344

Live Load: Design Truck

Multiple presence factor $M := 1.2$

$F_1 := 8000lbf$ Axle load 1 $F_{23} := 32000lbf$ Axle load 2 & 3

$Im := 33(1.0 - 0.125 \cdot DE_1)$ $Im = 33$ Dynamic load allowance $I_i := 1 + \frac{Im}{100}$ $I_i = 1.33$

$I := \max(1., I_i)$ $I = 1.33$

$E_{perp} := 96in + \left(1.44 \cdot \frac{ClearSpan}{12}\right)$ $E_{perp} = 13.09ft$ Distribution - perpendicular to span

$E_{para} := L_T + (LLDF \cdot DE_1 \cdot in)$ $E_{para} = 0.833ft$ Distribution - parallel to span

$D := 6ft$ Wheel spacing across a Design truck

$D1 := 14ft$ Typical Axle spacing of a Design truck

$P1 := \frac{M \cdot I \cdot F_1 \cdot ft}{E_{perp}}$ $P1 = 975.4 \cdot lbf$

$P2 := \frac{M \cdot I \cdot F_{23} \cdot ft}{E_{perp}}$ $P2 = 3.9 \times 10^3 \cdot lbf$

Live Load: Design Tandem

$F_{34} := 25000lbf$ Axle load 3 & 4

Multiple presence factor $M := 1.2$

$D := 6ft$ Wheel spacing across a Design tandem

$P3 := \frac{M \cdot I \cdot F_{34} \cdot ft}{E_{perp}}$ $P3 = 3.048 \times 10^3 \cdot lbf$

$D3 := 4ft$ Distance between Axles of a Design tandem

Live Load: Design Lane load :

Applicable only when Span is greater than 15ft

$W_{10} := 640 \frac{lbf}{ft}$ Design Lane load over 10 ft width

$W_1 := \frac{W_{10}}{10} = 64 \cdot \frac{lbf}{ft}$ Design Lane load per ft run

OTHER TRUCK CONFIGURATIONS

Live Load: H20

Multiple presence factor $M := 1.2$

$F_1 := 8000lbf$ Axle load 1 $F_{23} := 32000lbf$ Axle load 2 & 3 2 axles are Spaced : 14ft apart

$D := 6ft$ Wheel spacing

$P1 := \frac{M \cdot I \cdot F_1 \cdot ft}{E_{perp}}$ $P1 = 975.37 \cdot lbf$ $P2 := \frac{M \cdot I \cdot F_{23} \cdot ft}{E_{perp}}$ $P2 = 3.9 \times 10^3 \cdot lbf$

Live Load: 3S2

Multiple presence factor $M := 1.2$

$F_1 := 8000lbf$ Axle load 1 $F_{Others1} := 16000lbf$ Other Axle loads 5 axles are Spaced : 11ft, 4ft, 22ft & 4ft apart

$P1 := \frac{M \cdot I \cdot F_1 \cdot ft}{E_{perp}}$ $P1 = 975.371 \cdot lbf$ $P2 := \frac{M \cdot I \cdot F_{Others1} \cdot ft}{E_{perp}}$ $P2 = 1.951 \times 10^3 \cdot lbf$

Live Load: 6 Axle Trailer

Multiple presence factor $M := 1.0$

$F_1 := 12000lbf$ Axle load 1 $F_{Others2} := 24000lbf$ Other Axle loads 6 axles are Spaced: 11ft, 4.67ft, 31ft, 4ft & 4ft apart

$P2 := \frac{M \cdot I \cdot F_{Others2} \cdot ft}{E_{perp}}$ $P2 = 2.438 \times 10^3 \cdot lbf$

Live Load: 3 Axle Straight

Multiple presence factor $M := 1.2$

$F_1 := 12000lbf$ Axle load 1 $F_{Others3} := 24000lbf$ Other Axle loads 2 axle are Spaced: 15ft & 4ft apart

$P1 := \frac{M \cdot I \cdot F_1 \cdot ft}{E_{perp}}$ $P1 = 1.463 \times 10^3 \cdot lbf$ $P2 := \frac{M \cdot I \cdot F_{Others3} \cdot ft}{E_{perp}}$ $P2 = 2.926 \times 10^3 \cdot lbf$

Live Load: 4 Axle Straight

Multiple presence factor $M := 1.2$

$F_1 := 12000lbf$ Axle load 1 $F_{Others4} := 19000lbf$ Other Axle loads 4 axle are Spaced: 15ft, 4ft & 4ft apart

$P1 := \frac{M \cdot I \cdot F_1 \cdot ft}{E_{perp}}$ $P1 = 1.463 \times 10^3 \cdot lbf$ $P2 := \frac{M \cdot I \cdot F_{Others4} \cdot ft}{E_{perp}}$ $P2 = 2.317 \times 10^3 \cdot lbf$

Live Load: 5 Axle Semi

Multiple presence factor $M := 1.0$

$F_1 := 8000lbf$ Axle load 1 $F_{Others5} := 17000lbf$ Other Axle loads 5 axle are Spaced: 11ft, 4ft, 16ft & 4ft apart

$P1 := \frac{M \cdot I \cdot F_1 \cdot ft}{E_{perp}}$ $P1 = 812.809 \cdot lbf$ $P2 := \frac{M \cdot I \cdot F_{Others5} \cdot ft}{E_{perp}}$ $P2 = 1.727 \times 10^3 \cdot lbf$

Lateral Earth Pressure:

$H1 := DE_{ave} \cdot ft + t_{tMax} = 2.833\,ft$ soil depth at top of wall

$H2 := H1 + Rise = 7\,ft$ soil depth at bottom of wall

$LEPMIN := K_{min} \cdot \gamma_e \cdot 1ft = 35 \cdot \frac{lbf}{ft^2}$ minimum lateral earth pressure

$LEPMAX := K_{max} \cdot \gamma_e \cdot 1ft = 70 \cdot \frac{lbf}{ft^2}$ maximum lateral earth pressure

Minimum **(EMIN)**

$w_{et} := H1 \cdot LEPMIN = 99.167 \cdot \frac{lbf}{ft}$ top of wall

$w_{eb} := H2 \cdot LEPMIN = 244.988 \cdot \frac{lbf}{ft}$ bottom of wall

Maximum **(EMAX)**

$w_{et} := H1 \cdot LEPMAX = 198.333 \cdot \frac{lbf}{ft}$ top of wall

$w_{eb} := H2 \cdot LEPMAX = 489.977 \cdot \frac{lbf}{ft}$ bottom of wall

Internal Fluid Pressure:
(IFP)

$w_{ib} := \gamma_w \cdot ClearRise \cdot 1ft = 285.979 \cdot \frac{lbf}{ft}$ bottom of wall

42.42ft x 4.583 ft - *Box Culvert*
Load Rating Calculations

Reference Dwg: C22624- LO1

References:
1. **AASHTO The Manual for Bridge Evaluation 2nd Edition 2011**
2. **Attachment A: STAAD.Pro Computer Output.**

Load Combinations:

- 1.0DC+ 1.0Emin - "Dead".
- 1.0LL + 1.0Emin + 1.0Win - "MOMENT & SHEAR ".

Where,
DC - Dead Load;
LL - Live Load;
Emin - Min. Lateral Earth Pressure;
Win - Inside Water Pressure.

HL93 TRUCK

Inventory Rating: $\gamma_{DC} := 1.3$ $\gamma_{LL} := 1.75$

Moment

Top Slab: End Section

$Capacity := 114300 ft \cdot lbf$ $Dead := 0 ft \cdot lbf$ $Live := 12270 ft \cdot lbf$

$$RF := \frac{Capacity - \gamma_{DC} \cdot Dead}{\gamma_{LL} \cdot Live} \qquad RF = 5.32$$

Top Slab: Mid Section

$Capacity := 154200 ft \cdot lbf$ $Dead := 20993 ft \cdot lbf$ $Live := 23940 ft \cdot lbf$

$$RF := \frac{Capacity - \gamma_{DC} \cdot Dead}{\gamma_{LL} \cdot Live} \qquad RF = 3.03$$

Walls;

$Capacity := 164300 ft \cdot lbf$ $Dead := 46980 ft \cdot lbf$ $Live := 42140 ft \cdot lbf$

$$RF := \frac{Capacity - \gamma_{DC} \cdot Dead}{\gamma_{LL} \cdot Live} \qquad RF = 1.4$$

Shear

Top Slab: End Section

$Capacity := 27560 lbf$ $Dead := 6158 lbf$ $Live := 6730 lbf$

$$RF := \frac{Capacity - \gamma_{DC} \cdot Dead}{\gamma_{LL} \cdot Live} \qquad RF = 1.66$$

Top Slab: Mid Section

$Capacity := 20500 lbf$ $Dead := 4241 lbf$ $Live := 5370 lbf$

$$RF := \frac{Capacity - \gamma_{DC} \cdot Dead}{\gamma_{LL} \cdot Live} \qquad RF = 1.59$$

Walls;

$Capacity := 31000 lbf$ $Dead := 10633 lbf$ $Live := 9270 lbf$

9 Commercial Street
Hudson, NH
(800) 342-3374
Fax (603) 598-1344

$$RF := \frac{Capacity - \gamma_{DC} \cdot Dead}{\gamma_{LL} \cdot Live} \qquad RF = 1.06$$

Inventory Rating: Use Min. Value of Rating $RF := 1.06$

Operating Rating: Use Values that govern Inventory Rating

$\gamma_{DC} := 1.3$ $\gamma_{LL} := 1.35$ $Capacity := 31000lbf$ $Dead := 10633lbf$ $Live := 9270lbf$

$$RF := \frac{Capacity - \gamma_{DC} \cdot Dead}{\gamma_{LL} \cdot Live} \qquad RF = 1.37$$

HL93 TANDEM

Inventory Rating: $\gamma_{DC} := 1.3$ $\gamma_{LL} := 1.75$

Moment

Top Slab: End Section

$Capacity := 114300ft \cdot lbf$ $Dead := 0ft \cdot lbf$ $Live := 15150ft \cdot lbf$

$$RF := \frac{Capacity - \gamma_{DC} \cdot Dead}{\gamma_{LL} \cdot Live} \qquad RF = 4.31$$

Top Slab: Mid Section

$Capacity := 154200ft \cdot lbf$ $Dead := 20993ft \cdot lbf$ $Live := 26510ft \cdot lbf$

$$RF := \frac{Capacity - \gamma_{DC} \cdot Dead}{\gamma_{LL} \cdot Live} \qquad RF = 2.74$$

Walls:

$Capacity := 164300ft \cdot lbf$ $Dead := 46980ft \cdot lbf$ $Live := 37210ft \cdot lbf$

$$RF := \frac{Capacity - \gamma_{DC} \cdot Dead}{\gamma_{LL} \cdot Live} \qquad RF = 1.59$$

Shear

Top Slab: End Section

$Capacity := 27560lbf$ $Dead := 6158lbf$ $Live := 6510lbf$

$$RF := \frac{Capacity - \gamma_{DC} \cdot Dead}{\gamma_{LL} \cdot Live} \qquad RF = 1.72$$

Top Slab: Mid Section

$Capacity := 20500lbf$ $Dead := 4241lbf$ $Live := 3820lbf$

$$RF := \frac{Capacity - \gamma_{DC} \cdot Dead}{\gamma_{LL} \cdot Live} \qquad RF = 2.24$$

Walls:

$Capacity := 31000lbf$ $Dead := 10633lbf$ $Live := 8200lbf$

$$RF := \frac{Capacity - \gamma_{DC} \cdot Dead}{\gamma_{LL} \cdot Live} \qquad RF = 1.2$$

Inventory Rating: Use Min. Value of Rating $RF := 1.2$

Operating Rating: Use Values that govern Inventory Rating

$\gamma_{DC} := 1.3$ $\gamma_{LL} := 1.35$ $Capacity := 31000lbf$ $Dead := 10633lbf$ $Live := 8200lbf$

$$RF := \frac{Capacity - \gamma_{DC} \cdot Dead}{\gamma_{LL} \cdot Live} \qquad RF = 1.55$$

Truck Rating Calculations (See attached Truck Diagrams)

H20

Inventory Rating: $\gamma_{DC} := 1.3$ $\gamma_{LL} := 1.75$

Moment

Top Slab: End Section

$Capacity := 114300ft \cdot lbf$ $Dead := 0ft \cdot lbf$ $Live := 11120ft \cdot lbf$

$$RF := \frac{Capacity - \gamma_{DC} \cdot Dead}{\gamma_{LL} \cdot Live} \qquad RF = 5.87$$

Top Slab: Mid Section

$Capacity := 154200ft \cdot lbf$ $Dead := 20993ft \cdot lbf$ $Live := 22160ft \cdot lbf$

$$RF := \frac{Capacity - \gamma_{DC} \cdot Dead}{\gamma_{LL} \cdot Live} \qquad RF = 3.27$$

Walls;

$Capacity := 164300ft \cdot lbf$ $Dead := 46980ft \cdot lbf$ $Live := 29930ft \cdot lbf$

$$RF := \frac{Capacity - \gamma_{DC} \cdot Dead}{\gamma_{LL} \cdot Live} \qquad RF = 1.97$$

Shear

Top Slab: End Section

$Capacity := 27560lbf$ $Dead := 6158lbf$ $Live := 4800lbf$

$$RF := \frac{Capacity - \gamma_{DC} \cdot Dead}{\gamma_{LL} \cdot Live} \qquad RF = 2.33$$

Top Slab: Mid Section

$Capacity := 20500lbf$ $Dead := 4241lbf$ $Live := 4010lbf$

$$RF := \frac{Capacity - \gamma_{DC} \cdot Dead}{\gamma_{LL} \cdot Live} \qquad RF = 2.14$$

Walls;

$Capacity := 31000lbf$ $Dead := 10633lbf$ $Live := 6620lbf$

$$RF := \frac{Capacity - \gamma_{DC} \cdot Dead}{\gamma_{LL} \cdot Live} \qquad RF = 1.48$$

Inventory Rating: Use Min. Value of Rating $RF := 1.48$

Operating Rating: Use Values that govern Inventory Rating

$\gamma_{DC} := 1.3$ $\gamma_{LL} := 1.35$ Capacity := 31000lbf Dead := 10633lbf Live := 6620lbf

$$RF := \frac{Capacity - \gamma_{DC} \cdot Dead}{\gamma_{LL} \cdot Live}$$ RF = 1.92

3S2

Inventory Rating: $\gamma_{DC} := 1.3$ $\gamma_{LL} := 1.75$

Moment

Top Slab: End Section — Capacity := 114300ft·lbf Dead := 0ft·lbf Live := 10190ft·lbf

$$RF := \frac{Capacity - \gamma_{DC} \cdot Dead}{\gamma_{LL} \cdot Live}$$ RF = 6.41

Top Slab: Mid Section — Capacity := 154200ft·lbf Dead := 20993ft·lbf Live := 14440ft·lbf

$$RF := \frac{Capacity - \gamma_{DC} \cdot Dead}{\gamma_{LL} \cdot Live}$$ RF = 5.02

Walls; — Capacity := 164300ft·lbf Dead := 46980ft·lbf Live := 23150ft·lbf

$$RF := \frac{Capacity - \gamma_{DC} \cdot Dead}{\gamma_{LL} \cdot Live}$$ RF = 2.55

Shear

Top Slab: End Section — Capacity := 27560lbf Dead := 6158lbf Live := 4370lbf

$$RF := \frac{Capacity - \gamma_{DC} \cdot Dead}{\gamma_{LL} \cdot Live}$$ RF = 2.56

Top Slab: Mid Section — Capacity := 20500lbf Dead := 4241lbf Live := 3050lbf

$$RF := \frac{Capacity - \gamma_{DC} \cdot Dead}{\gamma_{LL} \cdot Live}$$ RF = 2.81

Walls; — Capacity := 31000lbf Dead := 10633lbf Live := 5150lbf

$$RF := \frac{Capacity - \gamma_{DC} \cdot Dead}{\gamma_{LL} \cdot Live}$$ RF = 1.91

Inventory Rating: Use Min. Value of Rating RF := 1.91

Operating Rating: Use Values that govern Inventory Rating

$\gamma_{DC} := 1.3$ $\gamma_{LL} := 1.35$ Capacity := 31000lbf Dead := 10633lbf Live := 5150lbf

$$RF := \frac{Capacity - \gamma_{DC} \cdot Dead}{\gamma_{LL} \cdot Live}$$ RF = 2.47

6 AXLE TRAILER

Inventory Rating: $\gamma_{DC} := 1.3$ $\gamma_{LL} := 1.75$

Moment

Top Slab: End Section

Capacity := 114300ft·lbf Dead := 0ft·lbf Live := 32420ft·lbf

$$RF := \frac{Capacity - \gamma_{DC} \cdot Dead}{\gamma_{LL} \cdot Live} \qquad RF = 2.01$$

Top Slab: Mid Section

Capacity := 154200ft·lbf Dead := 20993ft·lbf Live := 25050ft·lbf

$$RF := \frac{Capacity - \gamma_{DC} \cdot Dead}{\gamma_{LL} \cdot Live} \qquad RF = 2.89$$

Walls;

Capacity := 164300ft·lbf Dead := 46980ft·lbf Live := 33900ft·lbf

$$RF := \frac{Capacity - \gamma_{DC} \cdot Dead}{\gamma_{LL} \cdot Live} \qquad RF = 1.74$$

Shear

Top Slab: End Section

Capacity := 27560lbf Dead := 6158lbf Live := 5690lbf

$$RF := \frac{Capacity - \gamma_{DC} \cdot Dead}{\gamma_{LL} \cdot Live} \qquad RF = 1.96$$

Top Slab: Mid Section

Capacity := 20500lbf Dead := 4241lbf Live := 4990lbf

$$RF := \frac{Capacity - \gamma_{DC} \cdot Dead}{\gamma_{LL} \cdot Live} \qquad RF = 1.72$$

Walls;

Capacity := 31000lbf Dead := 10633lbf Live := 7480lbf

$$RF := \frac{Capacity - \gamma_{DC} \cdot Dead}{\gamma_{LL} \cdot Live} \qquad RF = 1.31$$

Inventory Rating: Use Min. Value of Rating RF := 1.31

Operating Rating: Use Values that govern Inventory Rating

$\gamma_{DC} := 1.3$ $\gamma_{LL} := 1.35$ Capacity := 31000lbf Dead := 10633lbf Live := 7480lbf

$$RF := \frac{Capacity - \gamma_{DC} \cdot Dead}{\gamma_{LL} \cdot Live} \qquad RF = 1.7$$

3 AXLE STRAIGHT

Inventory Rating: $\gamma_{DC} := 1.3$ $\gamma_{LL} := 1.75$

Moment

Top Slab: End Section

Capacity := 114300ft·lbf Dead := 0ft·lbf Live := 29710ft·lbf

$$RF := \frac{Capacity - \gamma_{DC} \cdot Dead}{\gamma_{LL} \cdot Live} \qquad RF = 2.2$$

Top Slab: Mid Section

Capacity := 154200ft·lbf Dead := 20993ft·lbf Live := 22240ft·lbf

$$RF := \frac{Capacity - \gamma_{DC} \cdot Dead}{\gamma_{LL} \cdot Live} \qquad RF = 3.26$$

Walls:

Capacity := 164300ft·lbf Dead := 46980ft·lbf Live := 31190ft·lbf

$$RF := \frac{Capacity - \gamma_{DC} \cdot Dead}{\gamma_{LL} \cdot Live} \qquad RF = 1.89$$

Shear

Top Slab: End Section

Capacity := 27560lbf Dead := 6158lbf Live := 5210lbf

$$RF := \frac{Capacity - \gamma_{DC} \cdot Dead}{\gamma_{LL} \cdot Live} \qquad RF = 2.14$$

Top Slab: Mid Section

Capacity := 20500lbf Dead := 4241lbf Live := 4430lbf

$$RF := \frac{Capacity - \gamma_{DC} \cdot Dead}{\gamma_{LL} \cdot Live} \qquad RF = 1.93$$

Walls:

Capacity := 31000lbf Dead := 10633lbf Live := 6890lbf

$$RF := \frac{Capacity - \gamma_{DC} \cdot Dead}{\gamma_{LL} \cdot Live} \qquad RF = 1.42$$

Inventory Rating: Use Min. Value of Rating RF := 1.42

Operating Rating: Use Values that govern Inventory Rating

$\gamma_{DC} := 1.3$ $\gamma_{LL} := 1.35$ Capacity := 31000lbf Dead := 10633lbf Live := 6890lbf

$$RF := \frac{Capacity - \gamma_{DC} \cdot Dead}{\gamma_{LL} \cdot Live} \qquad RF = 1.85$$

4 AXLE STRAIGHT

Inventory Rating: $\gamma_{DC} := 1.3$ $\gamma_{LL} := 1.75$

Moment

Top Slab: End Section

Capacity := 114300ft·lbf Dead := 0ft·lbf Live := 14750ft·lbf

$$RF := \frac{Capacity - \gamma_{DC} \cdot Dead}{\gamma_{LL} \cdot Live} \qquad RF = 4.43$$

Top Slab: Mid Section

Capacity := 154200ft·lbf Dead := 20993ft·lbf Live := 24120ft·lbf

$$RF := \frac{Capacity - \gamma_{DC} \cdot Dead}{\gamma_{LL} \cdot Live} \qquad RF = 3.01$$

Walls;

Capacity := 164300ft·lbf Dead := 46980ft·lbf Live := 34840ft·lbf

$$RF := \frac{Capacity - \gamma_{DC} \cdot Dead}{\gamma_{LL} \cdot Live} \qquad RF = 1.69$$

Shear

Top Slab: End Section

Capacity := 27560lbf Dead := 6158lbf Live := 5380lbf

$$RF := \frac{Capacity - \gamma_{DC} \cdot Dead}{\gamma_{LL} \cdot Live} \qquad RF = 2.08$$

Top Slab: Mid Section

Capacity := 20500lbf Dead := 4241lbf Live := 4420lbf

$$RF := \frac{Capacity - \gamma_{DC} \cdot Dead}{\gamma_{LL} \cdot Live} \qquad RF = 1.94$$

Walls;

Capacity := 31000lbf Dead := 10633lbf Live := 7680lbf

$$RF := \frac{Capacity - \gamma_{DC} \cdot Dead}{\gamma_{LL} \cdot Live} \qquad RF = 1.28$$

Inventory Rating: Use Min. Value of Rating RF := 1.28

Operating Rating: Use Values that govern Inventory Rating

$\gamma_{DC} := 1.3$ $\gamma_{LL} := 1.35$ Capacity := 31000lbf Dead := 10633lbf Live := 7680lbf

$$RF := \frac{Capacity - \gamma_{DC} \cdot Dead}{\gamma_{LL} \cdot Live} \qquad RF = 1.66$$

5 AXLE SEMI

Inventory Rating: $\gamma_{DC} := 1.3$ $\gamma_{LL} := 1.75$

Moment

Top Slab: End Section

Capacity := 114300ft·lbf Dead := 0ft·lbf Live := 9020ft·lbf

$$RF := \frac{Capacity - \gamma_{DC} \cdot Dead}{\gamma_{LL} \cdot Live} \qquad RF = 7.24$$

Top Slab: Mid Section

Capacity := 154200ft·lbf Dead := 20993ft·lbf Live := 13780ft·lbf

$$RF := \frac{Capacity - \gamma_{DC} \cdot Dead}{\gamma_{LL} \cdot Live} \qquad RF = 5.26$$

Walls;

Capacity := 164300ft·lbf Dead := 46980ft·lbf Live := 25340ft·lbf

$$RF := \frac{Capacity - \gamma_{DC} \cdot Dead}{\gamma_{LL} \cdot Live} \qquad RF = 2.33$$

Shear

Top Slab: End Section

Capacity := 27560lbf Dead := 6158lbf Live := 4300lbf

$$RF := \frac{Capacity - \gamma_{DC} \cdot Dead}{\gamma_{LL} \cdot Live} \qquad RF = 2.6$$

Top Slab: Mid Section

Capacity := 20500lbf Dead := 4241lbf Live := 3130lbf

$$RF := \frac{Capacity - \gamma_{DC} \cdot Dead}{\gamma_{LL} \cdot Live} \qquad RF = 2.74$$

Walls;

Capacity := 31000lbf Dead := 10633lbf Live := 5620lbf

$$RF := \frac{Capacity - \gamma_{DC} \cdot Dead}{\gamma_{LL} \cdot Live} \qquad RF = 1.75$$

Inventory Rating: Use Min. Value of Rating RF := 1.75

Operating Rating: Use Values that govern Inventory Rating

$\gamma_{DC} := 1.3$ $\gamma_{LL} := 1.35$ Capacity := 31000lbf Dead := 10633lbf Live := 5620lbf

$$RF := \frac{Capacity - \gamma_{DC} \cdot Dead}{\gamma_{LL} \cdot Live} \qquad RF = 2.26$$

```
**************************************************
*                                                *
*           STAAD.Pro V8i SELECTseries5          *
*           Version  20.07.10.65                 *
*           Proprietary Program of               *
*           Bentley Systems, Inc.                *
*           Date=    MAR  1, 2016                *
*           Time=    14:35: 1                    *
*                                                *
*      USER ID:                                  *
**************************************************
```

```
     1. STAAD SPACE
INPUT FILE: 42.42'x5'-Fixed.STD
     2. START JOB INFORMATION
     3. ENGINEER DATE 12/22/15
     4. ENGINEER NAME BK
     5. END JOB INFORMATION
     6. INPUT WIDTH 79
     7. UNIT FEET KIP
     8. JOINT COORDINATES
     9. 1 -21.96 0 0; 2 21.96 0 0; 3 -21.96 5.583 0; 4 -12 5.583 0; 5 0 5.583 0
    10. 6 12 5.583 0; 7 21.96 5.583 0
    11. MEMBER INCIDENCES
    12. 1 1 3; 2 2 7; 3 3 4; 4 4 5; 5 6 5; 6 7 6
    13. DEFINE MATERIAL START
    14. ISOTROPIC CONCRETE5000
    15. E 580390
    16. POISSON 0.17
    17. DENSITY 0.15
    18. ALPHA 5.5E-006
    19. DAMP 0.05
    20. ISOTROPIC STEEL
    21. E 4.176E+006
    22. POISSON 0.3
    23. DENSITY 0.489024
    24. ALPHA 6.5E-006
    25. DAMP 0.03
    26. END DEFINE MATERIAL
    27. MEMBER PROPERTY AMERICAN
    28. 4 5 PRIS YD 1.416 ZD 1
    29. MEMBER PROPERTY AMERICAN
    30. 1 2 TAPERED 2.083 1 1.5 1 0.2 1 0.2
    31. 3 6 TAPERED 1.83 1 1.416 1 0.2 1 0.2
    32. CONSTANTS
    33. MATERIAL CONCRETE5000 ALL
    34. SUPPORTS
    35. 1 FIXED BUT MZ
    36. 2 FIXED BUT MZ
    37. MEMBER OFFSET
    38. 3 START 1 -1.12 0
```

```
 39. 6 START -1 -1.12 0
 40. 1 END 0.75 -1.04 0
 41. 2 END -0.75 -1.04 0
 42. DEFINE MOVING LOAD
 43. ***H20
 44. TYPE 1 LOAD 0.975 3.9
 45. DIST 14
 46. ***HL93 TRUCK
 47. TYPE 2 LOAD 0.975 3.9 3.9
 48. DIST 14 14
 49. ***HL93 TANDEM
 50. TYPE 3 LOAD 3.05 3.05
 51. DIST 4
 52. ***3S2
 53. TYPE 4 LOAD 0.975 1.95 1.95 1.95 1.95
 54. DIST 11 4 22 4
 55. ***6 AXLE TRAILER
 56. TYPE 5 LOAD 2.44 2.44 2.44 2.44
 57. DIST 31 4 4
 58. ***3 AXLE STRAIGHT
 59. TYPE 6 LOAD 1.463 2.926 2.926
 60. DIST 15 4
 61. ***4 AXLE STRAIGHT
 62. TYPE 7 LOAD 1.463 2.317 2.317 2.317
 63. DIST 15 4 4
 64. ***5 AXLE SEMI
 65. TYPE 8 LOAD 0.812 1.727 1.727 1.727 1.727
 66. DIST 11 4 16 4
 67. ***
 68. LOAD 1 LOADTYPE NONE  TITLE LOAD CASE 1- UNIFORM LOAD
 69. MEMBER LOAD
 70. 3 4 5 6 UNI GY -0.141
 71. SELFWEIGHT Y -1
 72. LOAD 2 LOADTYPE LIVE  TITLE LANE LOAD
 73. MEMBER LOAD
 74. 3 4 5 6 UNI GY -0.064
 75. LOAD 3 LOADTYPE NONE  TITLE LOAD CASE 4 -EMIN
 76. MEMBER LOAD
 77. 1 TRAP GX 0.245 0.099
 78. 2 TRAP GX -0.245 -0.099
 79. LOAD 4 LOADTYPE NONE  TITLE LOAD CASE 6 -INSIDE WATER
 80. MEMBER LOAD
 81. 1 TRAP GX -0.286 0
 82. 2 TRAP GX 0.286 0
 83. ***H20
 84. LOAD 10 LOADTYPE LIVE  TITLE LOAD CASE
 85. LOAD GENERATION 9
 86. TYPE 1 -35.96 5.583 0 XINC 4
 87. ***HL93 TRUCK
 88. LOAD 20 LOADTYPE LIVE  TITLE LOAD CASE
**WARNING-A MOVING LOAD THAT WOULD HAVE BEEN APPLIED BEYOND THE X AND Z RANGES
          OF THE STRUCTURE HAS BEEN IGNORED. CASE=   11 WHEEL   1 OF   2
**WARNING-A MOVING LOAD THAT WOULD HAVE BEEN APPLIED BEYOND THE X AND Z RANGES
          OF THE STRUCTURE HAS BEEN IGNORED. CASE=   12 WHEEL   1 OF   2
**WARNING-A MOVING LOAD THAT WOULD HAVE BEEN APPLIED BEYOND THE X AND Z RANGES
          OF THE STRUCTURE HAS BEEN IGNORED. CASE=   13 WHEEL   1 OF   2
```

```
**WARNING-A MOVING LOAD THAT WOULD HAVE BEEN APPLIED BEYOND THE X AND Z RANGES
          OF THE STRUCTURE HAS BEEN IGNORED. CASE=   14 WHEEL   1 OF   2
 89. LOAD GENERATION 9
 90. TYPE 2 -49.96 5.583 0 XINC 5
 91. ***HL93 TANDEM
 92. LOAD 30 LOADTYPE LIVE  TITLE LOAD CASE
**WARNING-A MOVING LOAD THAT WOULD HAVE BEEN APPLIED BEYOND THE X AND Z RANGES
          OF THE STRUCTURE HAS BEEN IGNORED. CASE=   21 WHEEL   1 OF   3
**WARNING-A MOVING LOAD THAT WOULD HAVE BEEN APPLIED BEYOND THE X AND Z RANGES
          OF THE STRUCTURE HAS BEEN IGNORED. CASE=   21 WHEEL   2 OF   3
**WARNING-A MOVING LOAD THAT WOULD HAVE BEEN APPLIED BEYOND THE X AND Z RANGES
          OF THE STRUCTURE HAS BEEN IGNORED. CASE=   22 WHEEL   1 OF   3
**WARNING-A MOVING LOAD THAT WOULD HAVE BEEN APPLIED BEYOND THE X AND Z RANGES
          OF THE STRUCTURE HAS BEEN IGNORED. CASE=   22 WHEEL   2 OF   3
**WARNING-A MOVING LOAD THAT WOULD HAVE BEEN APPLIED BEYOND THE X AND Z RANGES
          OF THE STRUCTURE HAS BEEN IGNORED. CASE=   23 WHEEL   1 OF   3
**WARNING-A MOVING LOAD THAT WOULD HAVE BEEN APPLIED BEYOND THE X AND Z RANGES
          OF THE STRUCTURE HAS BEEN IGNORED. CASE=   23 WHEEL   2 OF   3
*ADDITIONAL MOVING LOAD MESSAGES SUPPRESSED
*ADDITIONAL MOVING LOAD MESSAGES SUPPRESSED
 93. LOAD GENERATION 8
 94. TYPE 3 -25.96 5.583 0 XINC 4
 95. ***3S2
 96. LOAD 40 LOADTYPE LIVE  TITLE LOAD CASE
 97. LOAD GENERATION 8
 98. TYPE 4 -62.96 5.583 0 XINC 6
 99. ***6 AXLE TRAILER
100. LOAD 50 LOADTYPE LIVE  TITLE LOAD CASE
101. LOAD GENERATION 8
102. TYPE 5 -60.96 5.583 0 XINC 6
103. ***3 AXLE STRAIGHT
104. LOAD 60 LOADTYPE LIVE  TITLE LOAD CASE
105. LOAD GENERATION 9
106. TYPE 6 -40.96 5.583 0 XINC 4
107. ***4 AXLE STRAIGHT
108. LOAD 70 LOADTYPE LIVE  TITLE LOAD CASE
109. LOAD GENERATION 8
110. TYPE 7 -44.96 5.583 0 XINC 5
111. ***5 AXLE SEMI
112. LOAD 80 LOADTYPE LIVE  TITLE LOAD CASE
113. LOAD GENERATION 8
114. TYPE 8 -56.96 5.583 0 XINC 6
115. ***
116. LOAD COMB 100 COMBINATION LOAD CASE
117. 1 1.0 3 1.0
118. ***
119. LOAD COMB 101 COMBINATION LOAD CASE
120. 11 1.0 2 1.0 3 1.0 4 1.0
121. LOAD COMB 102 COMBINATION LOAD CASE
122. 12 1.0 2 1.0 3 1.0 4 1.0
123. LOAD COMB 103 COMBINATION LOAD CASE
124. 13 1.0 2 1.0 3 1.0 4 1.0
125. LOAD COMB 104 COMBINATION LOAD CASE
126. 14 1.0 2 1.0 3 1.0 4 1.0
127. LOAD COMB 105 COMBINATION LOAD CASE
128. 15 1.0 2 1.0 3 1.0 4 1.0
```

```
129. LOAD COMB 106 COMBINATION LOAD CASE
130. 16 1.0 2 1.0 3 1.0 4 1.0
131. LOAD COMB 107 COMBINATION LOAD CASE
132. 17 1.0 2 1.0 3 1.0 4 1.0
133. LOAD COMB 108 COMBINATION LOAD CASE
134. 18 1.0 2 1.0 3 1.0 4 1.0
135. LOAD COMB 109 COMBINATION LOAD CASE
136. 19 1.0 2 1.0 3 1.0 4 1.0
137. ***
138. LOAD COMB 201 COMBINATION LOAD CASE
139. 21 1.0 2 1.0 3 1.0 4 1.0
140. LOAD COMB 202 COMBINATION LOAD CASE
141. 22 1.0 2 1.0 3 1.0 4 1.0
142. LOAD COMB 203 COMBINATION LOAD CASE
143. 23 1.0 2 1.0 3 1.0 4 1.0
144. LOAD COMB 204 COMBINATION LOAD CASE
145. 24 1.0 2 1.0 3 1.0 4 1.0
146. LOAD COMB 205 COMBINATION LOAD CASE
147. 25 1.0 2 1.0 3 1.0 4 1.0
148. LOAD COMB 206 COMBINATION LOAD CASE
149. 26 1.0 2 1.0 3 1.0 4 1.0
150. LOAD COMB 207 COMBINATION LOAD CASE
151. 27 1.0 2 1.0 3 1.0 4 1.0
152. LOAD COMB 208 COMBINATION LOAD CASE
153. 28 1.0 2 1.0 3 1.0 4 1.0
154. LOAD COMB 209 COMBINATION LOAD CASE
155. 29 1.0 2 1.0 3 1.0 4 1.0
156. ***
157. LOAD COMB 301 COMBINATION LOAD CASE
158. 31 1.0 2 1.0 3 1.0 4 1.0
159. LOAD COMB 302 COMBINATION LOAD CASE
160. 32 1.0 2 1.0 3 1.0 4 1.0
161. LOAD COMB 303 COMBINATION LOAD CASE
162. 33 1.0 2 1.0 3 1.0 4 1.0
163. LOAD COMB 304 COMBINATION LOAD CASE
164. 34 1.0 2 1.0 3 1.0 4 1.0
165. LOAD COMB 305 COMBINATION LOAD CASE
166. 35 1.0 2 1.0 3 1.0 4 1.0
167. LOAD COMB 306 COMBINATION LOAD CASE
168. 36 1.0 2 1.0 3 1.0 4 1.0
169. LOAD COMB 307 COMBINATION LOAD CASE
170. 37 1.0 2 1.0 3 1.0 4 1.0
171. LOAD COMB 308 COMBINATION LOAD CASE
172. 38 1.0 2 1.0 3 1.0 4 1.0
173. ***
174. LOAD COMB 401 COMBINATION LOAD CASE
175. 41 1.0 3 1.0 4 1.0
176. LOAD COMB 402 COMBINATION LOAD CASE
177. 42 1.0 3 1.0 4 1.0
178. LOAD COMB 403 COMBINATION LOAD CASE
179. 43 1.0 3 1.0 4 1.0
180. LOAD COMB 404 COMBINATION LOAD CASE
181. 44 1.0 3 1.0 4 1.0
182. LOAD COMB 405 COMBINATION LOAD CASE
183. 45 1.0 3 1.0 4 1.0
184. LOAD COMB 406 COMBINATION LOAD CASE
```

```
185. 46 1.0 3 1.0 4 1.0
186. LOAD COMB 407 COMBINATION LOAD CASE
187. 47 1.0 3 1.0 4 1.0
188. LOAD COMB 408 COMBINATION LOAD CASE
189. 48 1.0 3 1.0 4 1.0
190. ***
191. LOAD COMB 501 COMBINATION LOAD CASE
192. 51 1.0 3 1.0 4 1.0
193. LOAD COMB 502 COMBINATION LOAD CASE
194. 52 1.0 3 1.0 4 1.0
195. LOAD COMB 503 COMBINATION LOAD CASE
196. 53 1.0 3 1.0 4 1.0
197. LOAD COMB 504 COMBINATION LOAD CASE
198. 54 1.0 3 1.0 4 1.0
199. LOAD COMB 505 COMBINATION LOAD CASE
200. 55 1.0 3 1.0 4 1.0
201. LOAD COMB 506 COMBINATION LOAD CASE
202. 56 1.0 3 1.0 4 1.0
203. LOAD COMB 507 COMBINATION LOAD CASE
204. 57 1.0 3 1.0 4 1.0
205. LOAD COMB 508 COMBINATION LOAD CASE
206. 58 1.0 3 1.0 4 1.0
207. ***
208. LOAD COMB 601 COMBINATION LOAD CASE
209. 61 1.0 3 1.0 4 1.0
210. LOAD COMB 602 COMBINATION LOAD CASE
211. 62 1.0 3 1.0 4 1.0
212. LOAD COMB 603 COMBINATION LOAD CASE
213. 63 1.0 3 1.0 4 1.0
214. LOAD COMB 604 COMBINATION LOAD CASE
215. 64 1.0 3 1.0 4 1.0
216. LOAD COMB 605 COMBINATION LOAD CASE
217. 65 1.0 3 1.0 4 1.0
218. LOAD COMB 606 COMBINATION LOAD CASE
219. 66 1.0 3 1.0 4 1.0
220. LOAD COMB 607 COMBINATION LOAD CASE
221. 67 1.0 3 1.0 4 1.0
222. LOAD COMB 608 COMBINATION LOAD CASE
223. 68 1.0 3 1.0 4 1.0
224. LOAD COMB 609 COMBINATION LOAD CASE
225. 69 1.0 3 1.0 4 1.0
226. ***
227. LOAD COMB 701 COMBINATION LOAD CASE
228. 71 1.0 3 1.0 4 1.0
229. LOAD COMB 702 COMBINATION LOAD CASE
230. 72 1.0 3 1.0 4 1.0
231. LOAD COMB 703 COMBINATION LOAD CASE
232. 73 1.0 3 1.0 4 1.0
233. LOAD COMB 704 COMBINATION LOAD CASE
234. 74 1.0 3 1.0 4 1.0
235. LOAD COMB 705 COMBINATION LOAD CASE
236. 75 1.0 3 1.0 4 1.0
237. LOAD COMB 706 COMBINATION LOAD CASE
238. 76 1.0 3 1.0 4 1.0
239. LOAD COMB 707 COMBINATION LOAD CASE
240. 77 1.0 3 1.0 4 1.0
```

```
241. LOAD COMB 708 COMBINATION LOAD CASE
242. 78 1.0 3 1.0 4 1.0
243. ***
244. LOAD COMB 801 COMBINATION LOAD CASE
245. 81 1.0 3 1.0 4 1.0
246. LOAD COMB 802 COMBINATION LOAD CASE
247. 82 1.0 3 1.0 4 1.0
248. LOAD COMB 803 COMBINATION LOAD CASE
249. 83 1.0 3 1.0 4 1.0
250. LOAD COMB 804 COMBINATION LOAD CASE
251. 84 1.0 3 1.0 4 1.0
252. LOAD COMB 805 COMBINATION LOAD CASE
253. 85 1.0 3 1.0 4 1.0
254. LOAD COMB 806 COMBINATION LOAD CASE
255. 86 1.0 3 1.0 4 1.0
256. LOAD COMB 807 COMBINATION LOAD CASE
257. 87 1.0 3 1.0 4 1.0
258. LOAD COMB 808 COMBINATION LOAD CASE
259. 88 1.0 3 1.0 4 1.0
260. PERFORM ANALYSIS


        P R O B L E M   S T A T I S T I C S
        -----------------------------------

  NUMBER OF JOINTS          7  NUMBER OF MEMBERS       6
  NUMBER OF PLATES          0  NUMBER OF SOLIDS        0
  NUMBER OF SURFACES        0  NUMBER OF SUPPORTS      2


       SOLVER USED IS THE OUT-OF-CORE BASIC SOLVER

  ORIGINAL/FINAL BAND-WIDTH=     5/     5/     31 DOF
TOTAL      PRIMARY LOAD CASES =    79, TOTAL DEGREES OF FREEDOM =      32
TOTAL LOAD COMBINATION  CASES =    68  SO FAR.
  SIZE OF STIFFNESS MATRIX =        1 DOUBLE  KILO-WORDS
  REQRD/AVAIL. DISK SPACE  =     12.1/      0.0 MB


**WARNING** LOAD BEYOND ITS LENGTH. FULL LENGTH ASSUMED. MEMB     6 CASE   58
            LENGTH=       9.03  LOAD POINT=       9.92


261. LOAD LIST 100
262. PRINT FORCE ENVELOPE NSECTION 4 LIST 1 TO 6
```

MEMBER FORCE ENVELOPE

ALL UNITS ARE KIP FEET

MEMB	DISTANCE		FY	LD	MZ	LD	FZ	LD	MY	LD
1	0.00	MAX	-9.65	100	0.00	100	0.00	100	0.00	100
		MIN	-9.65	100	0.00	100	0.00	100	0.00	100
	0.38	MAX	-9.76	100	3.72	100	0.00	100	0.00	100
		MIN	-9.76	100	3.72	100	0.00	100	0.00	100
	0.77	MAX	-9.86	100	7.49	100	0.00	100	0.00	100
		MIN	-9.86	100	7.49	100	0.00	100	0.00	100
	1.15	MAX	-9.96	100	11.29	100	0.00	100	0.00	100
		MIN	-9.96	100	11.29	100	0.00	100	0.00	100
	1.53	MAX	-10.06	100	15.14	100	0.00	100	0.00	100
		MIN	-10.06	100	15.14	100	0.00	100	0.00	100
	1.92	MAX	-10.15	100	19.01	100	0.00	100	0.00	100
		MIN	-10.15	100	19.01	100	0.00	100	0.00	100
	2.30	MAX	-10.23	100	22.92	100	0.00	100	0.00	100
		MIN	-10.23	100	22.92	100	0.00	100	0.00	100
	2.69	MAX	-10.31	100	26.87	100	0.00	100	0.00	100
		MIN	-10.31	100	26.87	100	0.00	100	0.00	100
	3.07	MAX	-10.39	100	30.84	100	0.00	100	0.00	100
		MIN	-10.39	100	30.84	100	0.00	100	0.00	100
	3.45	MAX	-10.46	100	34.84	100	0.00	100	0.00	100
		MIN	-10.46	100	34.84	100	0.00	100	0.00	100
	3.84	MAX	-10.52	100	38.86	100	0.00	100	0.00	100
		MIN	-10.52	100	38.86	100	0.00	100	0.00	100
	4.22	MAX	-10.58	100	42.91	100	0.00	100	0.00	100
		MIN	-10.58	100	42.91	100	0.00	100	0.00	100
	4.60	MAX	-10.63	100	46.98	100	0.00	100	0.00	100
		MIN	-10.63	100	46.98	100	0.00	100	0.00	100

MAX/MIN FORCE VALUES FOR MEMB 1, AMONGST ALL SECT LOCATIONS

	FY/ FZ	DIST DIST	LD LD	MZ/ MY	DIST DIST	LD LD	FX	DIST	LD
MAX.	-9.65	0.00	100	46.98	4.60	100			
	0.00	0.00	100	0.00	0.00	100	10.66 C	0.00	100
MIN.	-10.63	4.60	100	0.00	0.00	100			
	0.00	4.60	100	0.00	4.60	100	9.57 C	4.60	100

2	0.00	MAX	-9.65	100	0.00	100	0.00	100	0.00	100
		MIN	-9.65	100	0.00	100	0.00	100	0.00	100
	0.38	MAX	-9.76	100	3.72	100	0.00	100	0.00	100
		MIN	-9.76	100	3.72	100	0.00	100	0.00	100

	0.77	MAX	-9.86	100	7.49	100	0.00	100	0.00	100
		MIN	-9.86	100	7.49	100	0.00	100	0.00	100
	1.15	MAX	-9.96	100	11.29	100	0.00	100	0.00	100
		MIN	-9.96	100	11.29	100	0.00	100	0.00	100
	1.53	MAX	-10.06	100	15.14	100	0.00	100	0.00	100
		MIN	-10.06	100	15.14	100	0.00	100	0.00	100
	1.92	MAX	-10.15	100	19.01	100	0.00	100	0.00	100
		MIN	-10.15	100	19.01	100	0.00	100	0.00	100
	2.30	MAX	-10.23	100	22.92	100	0.00	100	0.00	100
		MIN	-10.23	100	22.92	100	0.00	100	0.00	100
	2.69	MAX	-10.31	100	26.87	100	0.00	100	0.00	100
		MIN	-10.31	100	26.87	100	0.00	100	0.00	100
	3.07	MAX	-10.39	100	30.84	100	0.00	100	0.00	100
		MIN	-10.39	100	30.84	100	0.00	100	0.00	100
	3.45	MAX	-10.46	100	34.84	100	0.00	100	0.00	100
		MIN	-10.46	100	34.84	100	0.00	100	0.00	100
	3.84	MAX	-10.52	100	38.86	100	0.00	100	0.00	100
		MIN	-10.52	100	38.86	100	0.00	100	0.00	100
	4.22	MAX	-10.58	100	42.91	100	0.00	100	0.00	100
		MIN	-10.58	100	42.91	100	0.00	100	0.00	100
	4.60	MAX	-10.63	100	46.98	100	0.00	100	0.00	100
		MIN	-10.63	100	46.98	100	0.00	100	0.00	100

MAX/MIN FORCE VALUES FOR MEMB 2, AMONGST ALL SECT LOCATIONS

	FY/ FZ	DIST DIST	LD LD	MZ/ MY	DIST DIST	LD LD	FX	DIST	LD
MAX.	-9.65	0.00	100	46.98	4.60	100			
	0.00	0.00	100	0.00	0.00	100	10.66 C	0.00	100
MIN.	-10.63	4.60	100	0.00	0.00	100			
	0.00	4.60	100	0.00	4.60	100	9.57 C	4.60	100

3	0.00	MAX	6.16	100	44.09	100	0.00	100	0.00	100
		MIN	6.16	100	44.09	100	0.00	100	0.00	100
	0.75	MAX	5.85	100	39.57	100	0.00	100	0.00	100
		MIN	5.85	100	39.57	100	0.00	100	0.00	100
	1.50	MAX	5.55	100	35.28	100	0.00	100	0.00	100
		MIN	5.55	100	35.28	100	0.00	100	0.00	100
	2.26	MAX	5.24	100	31.22	100	0.00	100	0.00	100
		MIN	5.24	100	31.22	100	0.00	100	0.00	100
	3.01	MAX	4.95	100	27.39	100	0.00	100	0.00	100
		MIN	4.95	100	27.39	100	0.00	100	0.00	100
	3.76	MAX	4.66	100	23.77	100	0.00	100	0.00	100
		MIN	4.66	100	23.77	100	0.00	100	0.00	100
	4.51	MAX	4.37	100	20.38	100	0.00	100	0.00	100
		MIN	4.37	100	20.38	100	0.00	100	0.00	100
	5.27	MAX	4.08	100	17.20	100	0.00	100	0.00	100
		MIN	4.08	100	17.20	100	0.00	100	0.00	100
	6.02	MAX	3.80	100	14.24	100	0.00	100	0.00	100
		MIN	3.80	100	14.24	100	0.00	100	0.00	100
	6.77	MAX	3.52	100	11.48	100	0.00	100	0.00	100
		MIN	3.52	100	11.48	100	0.00	100	0.00	100

	7.52	MAX	3.25	100	8.94	100	0.00	100	0.00	100
		MIN	3.25	100	8.94	100	0.00	100	0.00	100
	8.28	MAX	2.98	100	6.59	100	0.00	100	0.00	100
		MIN	2.98	100	6.59	100	0.00	100	0.00	100
	9.03	MAX	2.71	100	4.45	100	0.00	100	0.00	100
		MIN	2.71	100	4.45	100	0.00	100	0.00	100

MAX/MIN FORCE VALUES FOR MEMB 3, AMONGST ALL SECT LOCATIONS

	FY/ FZ	DIST DIST	LD LD	MZ/ MY	DIST DIST	LD LD	FX	DIST	LD
MAX.	6.16	0.00	100	44.09	0.00	100			
	0.00	0.00	100	0.00	0.00	100	12.91 C	0.00	100
MIN.	2.71	9.03	100	4.45	9.03	100			
	0.00	9.03	100	0.00	9.03	100	12.48 C	9.03	100

4	0.00	MAX	4.24	100	4.45	100	0.00	100	0.00	100
		MIN	4.24	100	4.45	100	0.00	100	0.00	100
	1.00	MAX	3.89	100	0.39	100	0.00	100	0.00	100
		MIN	3.89	100	0.39	100	0.00	100	0.00	100
	2.00	MAX	3.53	100	-3.32	100	0.00	100	0.00	100
		MIN	3.53	100	-3.32	100	0.00	100	0.00	100
	3.00	MAX	3.18	100	-6.68	100	0.00	100	0.00	100
		MIN	3.18	100	-6.68	100	0.00	100	0.00	100
	4.00	MAX	2.83	100	-9.68	100	0.00	100	0.00	100
		MIN	2.83	100	-9.68	100	0.00	100	0.00	100
	5.00	MAX	2.47	100	-12.34	100	0.00	100	0.00	100
		MIN	2.47	100	-12.34	100	0.00	100	0.00	100
	6.00	MAX	2.12	100	-14.63	100	0.00	100	0.00	100
		MIN	2.12	100	-14.63	100	0.00	100	0.00	100
	7.00	MAX	1.77	100	-16.58	100	0.00	100	0.00	100
		MIN	1.77	100	-16.58	100	0.00	100	0.00	100
	8.00	MAX	1.41	100	-18.17	100	0.00	100	0.00	100
		MIN	1.41	100	-18.17	100	0.00	100	0.00	100
	9.00	MAX	1.06	100	-19.40	100	0.00	100	0.00	100
		MIN	1.06	100	-19.40	100	0.00	100	0.00	100
	10.00	MAX	0.71	100	-20.29	100	0.00	100	0.00	100
		MIN	0.71	100	-20.29	100	0.00	100	0.00	100
	11.00	MAX	0.35	100	-20.82	100	0.00	100	0.00	100
		MIN	0.35	100	-20.82	100	0.00	100	0.00	100
	12.00	MAX	0.00	100	-20.99	100	0.00	100	0.00	100
		MIN	0.00	100	-20.99	100	0.00	100	0.00	100

MAX/MIN FORCE VALUES FOR MEMB 4, AMONGST ALL SECT LOCATIONS

	FY/ FZ	DIST DIST	LD LD	MZ/ MY	DIST DIST	LD LD	FX	DIST	LD

MAX.	4.24	0.00	100	4.45	0.00	100			
	0.00	0.00	100	0.00	0.00	100	12.05 C	0.00	100
MIN.	0.00	12.00	100	-20.99	12.00	100			
	0.00	12.00	100	0.00	12.00	100	12.05 C	12.00	100

5	0.00	MAX	4.24	100	4.45	100	0.00	100	0.00	100
		MIN	4.24	100	4.45	100	0.00	100	0.00	100
	1.00	MAX	3.89	100	0.39	100	0.00	100	0.00	100
		MIN	3.89	100	0.39	100	0.00	100	0.00	100
	2.00	MAX	3.53	100	-3.32	100	0.00	100	0.00	100
		MIN	3.53	100	-3.32	100	0.00	100	0.00	100
	3.00	MAX	3.18	100	-6.68	100	0.00	100	0.00	100
		MIN	3.18	100	-6.68	100	0.00	100	0.00	100
	4.00	MAX	2.83	100	-9.68	100	0.00	100	0.00	100
		MIN	2.83	100	-9.68	100	0.00	100	0.00	100
	5.00	MAX	2.47	100	-12.34	100	0.00	100	0.00	100
		MIN	2.47	100	-12.34	100	0.00	100	0.00	100
	6.00	MAX	2.12	100	-14.63	100	0.00	100	0.00	100
		MIN	2.12	100	-14.63	100	0.00	100	0.00	100
	7.00	MAX	1.77	100	-16.58	100	0.00	100	0.00	100
		MIN	1.77	100	-16.58	100	0.00	100	0.00	100
	8.00	MAX	1.41	100	-18.17	100	0.00	100	0.00	100
		MIN	1.41	100	-18.17	100	0.00	100	0.00	100
	9.00	MAX	1.06	100	-19.40	100	0.00	100	0.00	100
		MIN	1.06	100	-19.40	100	0.00	100	0.00	100
	10.00	MAX	0.71	100	-20.29	100	0.00	100	0.00	100
		MIN	0.71	100	-20.29	100	0.00	100	0.00	100
	11.00	MAX	0.35	100	-20.82	100	0.00	100	0.00	100
		MIN	0.35	100	-20.82	100	0.00	100	0.00	100
	12.00	MAX	0.00	100	-20.99	100	0.00	100	0.00	100
		MIN	0.00	100	-20.99	100	0.00	100	0.00	100

MAX/MIN FORCE VALUES FOR MEMB 5, AMONGST ALL SECT LOCATIONS

	FY/ FZ	DIST DIST	LD LD	MZ/ MY	DIST DIST	LD LD	FX	DIST	LD
MAX.	4.24	0.00	100	4.45	0.00	100			
	0.00	0.00	100	0.00	0.00	100	12.05 C	0.00	100
MIN.	0.00	12.00	100	-20.99	12.00	100			
	0.00	12.00	100	0.00	12.00	100	12.05 C	12.00	100

6	0.00	MAX	6.16	100	44.09	100	0.00	100	0.00	100
		MIN	6.16	100	44.09	100	0.00	100	0.00	100
	0.75	MAX	5.85	100	39.57	100	0.00	100	0.00	100
		MIN	5.85	100	39.57	100	0.00	100	0.00	100
	1.50	MAX	5.55	100	35.28	100	0.00	100	0.00	100
		MIN	5.55	100	35.28	100	0.00	100	0.00	100
	2.26	MAX	5.24	100	31.22	100	0.00	100	0.00	100
		MIN	5.24	100	31.22	100	0.00	100	0.00	100
	3.01	MAX	4.95	100	27.39	100	0.00	100	0.00	100

	MIN	4.95	100	27.39	100	0.00	100	0.00	100
3.76	MAX	4.66	100	23.77	100	0.00	100	0.00	100
	MIN	4.66	100	23.77	100	0.00	100	0.00	100
4.51	MAX	4.37	100	20.38	100	0.00	100	0.00	100
	MIN	4.37	100	20.38	100	0.00	100	0.00	100
5.27	MAX	4.08	100	17.20	100	0.00	100	0.00	100
	MIN	4.08	100	17.20	100	0.00	100	0.00	100
6.02	MAX	3.80	100	14.24	100	0.00	100	0.00	100
	MIN	3.80	100	14.24	100	0.00	100	0.00	100
6.77	MAX	3.52	100	11.48	100	0.00	100	0.00	100
	MIN	3.52	100	11.48	100	0.00	100	0.00	100
7.52	MAX	3.25	100	8.94	100	0.00	100	0.00	100
	MIN	3.25	100	8.94	100	0.00	100	0.00	100
8.28	MAX	2.98	100	6.59	100	0.00	100	0.00	100
	MIN	2.98	100	6.59	100	0.00	100	0.00	100
9.03	MAX	2.71	100	4.45	100	0.00	100	0.00	100
	MIN	2.71	100	4.45	100	0.00	100	0.00	100

MAX/MIN FORCE VALUES FOR MEMB 6, AMONGST ALL SECT LOCATIONS

	FY/ FZ	DIST DIST	LD LD	MZ/ MY	DIST DIST	LD LD	FX	DIST	LD
MAX.	6.16	0.00	100	44.09	0.00	100			
	0.00	0.00	100	0.00	0.00	100	12.91 C	0.00	100
MIN.	2.71	9.03	100	4.45	9.03	100			
	0.00	9.03	100	0.00	9.03	100	12.48 C	9.03	100

********** END OF FORCE ENVELOPE FROM INTERNAL STORAGE **********

263. LOAD LIST 101 TO 109
264. PRINT FORCE ENVELOPE NSECTION 4 LIST 1 TO 6

MEMBER FORCE ENVELOPE

ALL UNITS ARE KIP FEET

MEMB	DISTANCE		FY	LD	MZ	LD	FZ	LD	MY	LD
1	0.00	MAX	-1.53	101	0.00	109	0.00	109	0.00	109
		MIN	-6.46	107	0.00	109	0.00	109	0.00	109
	0.38	MAX	-1.52	101	2.48	107	0.00	109	0.00	109
		MIN	-6.45	107	0.59	101	0.00	109	0.00	109
	0.77	MAX	-1.51	101	4.95	107	0.00	109	0.00	109
		MIN	-6.44	107	1.17	101	0.00	109	0.00	109
	1.15	MAX	-1.51	101	7.42	107	0.00	109	0.00	109
		MIN	-6.43	107	1.74	101	0.00	109	0.00	109
	1.53	MAX	-1.51	101	9.89	107	0.00	109	0.00	109
		MIN	-6.43	107	2.32	101	0.00	109	0.00	109
	1.92	MAX	-1.51	101	12.36	107	0.00	109	0.00	109
		MIN	-6.44	107	2.90	101	0.00	109	0.00	109
	2.30	MAX	-1.52	101	14.83	107	0.00	109	0.00	109
		MIN	-6.45	107	3.48	101	0.00	109	0.00	109
	2.69	MAX	-1.53	101	17.30	107	0.00	109	0.00	109
		MIN	-6.46	107	4.07	101	0.00	109	0.00	109
	3.07	MAX	-1.55	101	19.78	107	0.00	109	0.00	109
		MIN	-6.48	107	4.66	101	0.00	109	0.00	109
	3.45	MAX	-1.57	101	22.27	107	0.00	109	0.00	109
		MIN	-6.50	107	5.26	101	0.00	109	0.00	109
	3.84	MAX	-1.60	101	24.77	107	0.00	109	0.00	109
		MIN	-6.53	107	5.86	101	0.00	109	0.00	109
	4.22	MAX	-1.63	101	27.28	107	0.00	109	0.00	109
		MIN	-6.56	107	6.48	101	0.00	109	0.00	109
	4.60	MAX	-1.66	101	29.81	107	0.00	109	0.00	109
		MIN	-6.59	107	7.11	101	0.00	109	0.00	109

MAX/MIN FORCE VALUES FOR MEMB 1, AMONGST ALL SECT LOCATIONS

	FY/ FZ	DIST DIST	LD LD	MZ/ MY	DIST DIST	LD LD	FX	DIST	LD
MAX.	-1.51	1.53	101	29.81	4.60	107			
	0.00	0.00	101	0.00	0.00	101	5.73 C	4.60	105
MIN.	-6.59	4.60	107	0.00	0.00	109			
	0.00	4.60	109	0.00	4.60	109	4.01 C	0.00	109

2	0.00	MAX	-2.14	101	0.00	109	0.00	109	0.00	109
		MIN	-6.49	107	0.00	109	0.00	109	0.00	109
	0.38	MAX	-2.13	101	2.49	107	0.00	109	0.00	109
		MIN	-6.47	107	0.82	101	0.00	109	0.00	109

0.77	MAX	-2.12	101	4.97	107	0.00	109	0.00	109
	MIN	-6.47	107	1.63	101	0.00	109	0.00	109
1.15	MAX	-2.11	101	7.45	107	0.00	109	0.00	109
	MIN	-6.46	107	2.44	101	0.00	109	0.00	109
1.53	MAX	-2.11	101	9.93	107	0.00	109	0.00	109
	MIN	-6.46	107	3.25	101	0.00	109	0.00	109
1.92	MAX	-2.12	101	12.41	107	0.00	109	0.00	109
	MIN	-6.47	107	4.06	101	0.00	109	0.00	109
2.30	MAX	-2.13	101	14.89	107	0.00	109	0.00	109
	MIN	-6.47	107	4.88	101	0.00	109	0.00	109
2.69	MAX	-2.14	101	17.38	107	0.00	109	0.00	109
	MIN	-6.49	107	5.70	101	0.00	109	0.00	109
3.07	MAX	-2.16	101	19.87	107	0.00	109	0.00	109
	MIN	-6.50	107	6.52	101	0.00	109	0.00	109
3.45	MAX	-2.18	101	22.37	107	0.00	109	0.00	109
	MIN	-6.53	107	7.35	101	0.00	109	0.00	109
3.84	MAX	-2.20	101	24.88	107	0.00	109	0.00	109
	MIN	-6.55	107	8.19	101	0.00	109	0.00	109
4.22	MAX	-2.24	101	27.40	107	0.00	109	0.00	109
	MIN	-6.58	107	9.04	101	0.00	109	0.00	109
4.60	MAX	-2.27	101	29.93	107	0.00	109	0.00	109
	MIN	-6.62	107	9.91	101	0.00	109	0.00	109

MAX/MIN FORCE VALUES FOR MEMB 2, AMONGST ALL SECT LOCATIONS

	FY/ FZ	DIST DIST	LD LD	MZ/ MY	DIST DIST	LD LD	FX	DIST	LD
MAX.	-2.11	1.53	101	29.93	4.60	107			
	0.00	0.00	101	0.00	0.00	101	5.62 C	4.60	109
MIN.	-6.62	4.60	107	0.00	0.00	109			
	0.00	4.60	109	0.00	4.60	109	1.81 C	0.00	101

3	0.00	MAX	4.80	101	28.25	107	0.00	109	0.00	109
		MIN	2.13	109	5.62	101	0.00	109	0.00	109
	0.75	MAX	4.24	102	26.29	108	0.00	109	0.00	109
		MIN	0.88	101	4.94	101	0.00	109	0.00	109
	1.50	MAX	4.20	102	24.46	108	0.00	109	0.00	109
		MIN	0.84	101	4.29	101	0.00	109	0.00	109
	2.26	MAX	4.15	102	22.67	108	0.00	109	0.00	109
		MIN	0.79	101	2.24	102	0.00	109	0.00	109
	3.01	MAX	4.10	102	20.91	108	0.00	109	0.00	109
		MIN	0.74	101	-0.87	102	0.00	109	0.00	109
	3.76	MAX	4.05	102	19.19	108	0.00	109	0.00	109
		MIN	0.69	101	-3.94	102	0.00	109	0.00	109
	4.51	MAX	3.52	103	17.50	108	0.00	109	0.00	109
		MIN	0.14	102	-4.98	102	0.00	109	0.00	109
	5.27	MAX	3.47	103	16.01	109	0.00	109	0.00	109
		MIN	0.09	102	-5.06	102	0.00	109	0.00	109
	6.02	MAX	3.42	103	14.67	109	0.00	109	0.00	109
		MIN	0.04	102	-5.11	102	0.00	109	0.00	109
	6.77	MAX	3.37	103	13.38	109	0.00	109	0.00	109
		MIN	-0.01	102	-7.19	103	0.00	109	0.00	109

	7.52	MAX	3.33	103	12.12	109	0.00	109	0.00	109
		MIN	-0.06	102	-9.71	103	0.00	109	0.00	109
	8.28	MAX	2.92	104	10.90	109	0.00	109	0.00	109
		MIN	-0.59	103	-11.12	103	0.00	109	0.00	109
	9.03	MAX	2.88	104	9.71	109	0.00	109	0.00	109
		MIN	-0.64	103	-10.66	103	0.00	109	0.00	109

MAX/MIN FORCE VALUES FOR MEMB 3, AMONGST ALL SECT LOCATIONS

	FY/ FZ	DIST DIST	LD LD	MZ/ MY	DIST DIST	LD LD	FX	DIST	LD
MAX.	4.80	0.00	101	28.25	0.00	107			
	0.00	0.00	101	0.00	0.00	101	7.74 C	0.00	107
MIN.	-0.64	9.03	103	-11.12	8.28	103			
	0.00	9.03	109	0.00	9.03	109	2.60 C	9.03	101

4	0.00	MAX	3.60	104	9.71	109	0.00	109	0.00	109
		MIN	-0.03	103	-10.66	103	0.00	109	0.00	109
	1.00	MAX	3.54	104	7.34	109	0.00	109	0.00	109
		MIN	-0.09	103	-11.69	104	0.00	109	0.00	109
	2.00	MAX	3.47	104	5.03	109	0.00	109	0.00	109
		MIN	-0.15	103	-15.19	104	0.00	109	0.00	109
	3.00	MAX	2.99	105	2.79	109	0.00	109	0.00	109
		MIN	-0.49	104	-14.89	104	0.00	109	0.00	109
	4.00	MAX	2.92	105	0.62	109	0.00	109	0.00	109
		MIN	-0.55	104	-14.37	104	0.00	109	0.00	109
	5.00	MAX	2.86	105	-1.50	109	0.00	109	0.00	109
		MIN	-0.62	104	-17.05	105	0.00	109	0.00	109
	6.00	MAX	2.80	105	-3.14	101	0.00	109	0.00	109
		MIN	-0.68	104	-19.88	105	0.00	109	0.00	109
	7.00	MAX	2.29	106	-3.40	101	0.00	109	0.00	109
		MIN	-1.17	105	-18.90	105	0.00	109	0.00	109
	8.00	MAX	2.23	106	-3.60	101	0.00	109	0.00	109
		MIN	-1.23	105	-17.83	106	0.00	109	0.00	109
	9.00	MAX	2.16	106	-3.73	101	0.00	109	0.00	109
		MIN	-1.30	105	-20.03	106	0.00	109	0.00	109
	10.00	MAX	2.10	106	-3.80	101	0.00	109	0.00	109
		MIN	-1.36	105	-22.16	106	0.00	109	0.00	109
	11.00	MAX	1.61	107	-3.81	101	0.00	109	0.00	109
		MIN	-1.87	106	-20.48	106	0.00	109	0.00	109
	12.00	MAX	1.55	107	-3.75	101	0.00	109	0.00	109
		MIN	-1.93	106	-18.82	107	0.00	109	0.00	109

MAX/MIN FORCE VALUES FOR MEMB 4, AMONGST ALL SECT LOCATIONS

FY/ FZ	DIST DIST	LD LD	MZ/ MY	DIST DIST	LD LD	FX	DIST	LD

MAX.	3.60	0.00	104	9.71	0.00	109				
	0.00	0.00	101	0.00	0.00	101	7.32 C	0.00	107	
MIN.	-1.93	12.00	106	-22.16	10.00	106				
	0.00	12.00	109	0.00	12.00	109	2.54 C	12.00	101	

5	0.00	MAX	4.01	109	10.19	105	0.00	109	0.00	109
		MIN	0.86	101	-6.30	109	0.00	109	0.00	109
	1.00	MAX	3.95	109	7.96	105	0.00	109	0.00	109
		MIN	0.79	101	-10.27	109	0.00	109	0.00	109
	2.00	MAX	3.44	108	5.96	104	0.00	109	0.00	109
		MIN	-0.02	109	-14.03	109	0.00	109	0.00	109
	3.00	MAX	3.37	108	4.29	104	0.00	109	0.00	109
		MIN	-0.08	109	-13.98	109	0.00	109	0.00	109
	4.00	MAX	3.31	108	2.68	104	0.00	109	0.00	109
		MIN	-0.15	109	-13.87	109	0.00	109	0.00	109
	5.00	MAX	3.25	108	1.38	103	0.00	109	0.00	109
		MIN	-0.21	109	-16.06	108	0.00	109	0.00	109
	6.00	MAX	2.74	107	0.17	103	0.00	109	0.00	109
		MIN	-0.72	108	-19.11	108	0.00	109	0.00	109
	7.00	MAX	2.67	107	-0.97	103	0.00	109	0.00	109
		MIN	-0.78	108	-18.36	108	0.00	109	0.00	109
	8.00	MAX	2.61	107	-1.98	102	0.00	109	0.00	109
		MIN	-0.85	108	-17.55	108	0.00	109	0.00	109
	9.00	MAX	2.55	107	-2.64	102	0.00	109	0.00	109
		MIN	-0.91	108	-19.43	107	0.00	109	0.00	109
	10.00	MAX	2.06	106	-3.24	102	0.00	109	0.00	109
		MIN	-1.42	107	-21.79	107	0.00	109	0.00	109
	11.00	MAX	1.99	106	-3.63	101	0.00	109	0.00	109
		MIN	-1.48	107	-20.34	107	0.00	109	0.00	109
	12.00	MAX	1.93	106	-3.75	101	0.00	109	0.00	109
		MIN	-1.55	107	-18.82	107	0.00	109	0.00	109

MAX/MIN FORCE VALUES FOR MEMB 5, AMONGST ALL SECT LOCATIONS

	FY/ FZ	DIST DIST	LD LD	MZ/ MY	DIST DIST	LD LD	FX	DIST	LD
MAX.	4.01	0.00	109	10.19	0.00	105			
	0.00	0.00	101	0.00	0.00	101	7.32 C	0.00	107
MIN.	-1.55	12.00	107	-21.79	10.00	107			
	0.00	12.00	109	0.00	12.00	109	2.54 C	12.00	101

6	0.00	MAX	3.72	109	28.42	107	0.00	109	0.00	109
		MIN	1.11	101	9.34	101	0.00	109	0.00	109
	0.75	MAX	3.67	109	26.36	107	0.00	109	0.00	109
		MIN	1.06	101	8.53	101	0.00	109	0.00	109
	1.50	MAX	3.63	109	24.49	106	0.00	109	0.00	109
		MIN	1.01	101	7.75	101	0.00	109	0.00	109
	2.26	MAX	3.58	109	22.80	106	0.00	109	0.00	109
		MIN	0.97	101	7.00	101	0.00	109	0.00	109
	3.01	MAX	3.53	109	21.14	106	0.00	109	0.00	109

	MIN	0.92	101	6.29	101	0.00	109	0.00	109
3.76	MAX	3.48	109	19.52	106	0.00	109	0.00	109
	MIN	0.87	101	5.62	101	0.00	109	0.00	109
4.51	MAX	3.44	109	17.94	106	0.00	109	0.00	109
	MIN	0.82	101	4.99	101	0.00	109	0.00	109
5.27	MAX	3.39	109	16.39	106	0.00	109	0.00	109
	MIN	0.77	101	4.38	101	0.00	109	0.00	109
6.02	MAX	3.34	109	14.88	106	0.00	109	0.00	109
	MIN	0.73	101	3.47	109	0.00	109	0.00	109
6.77	MAX	3.29	109	13.58	105	0.00	109	0.00	109
	MIN	0.68	101	0.97	109	0.00	109	0.00	109
7.52	MAX	3.24	109	12.41	105	0.00	109	0.00	109
	MIN	0.63	101	-1.49	109	0.00	109	0.00	109
8.28	MAX	3.20	109	11.28	105	0.00	109	0.00	109
	MIN	0.58	101	-3.91	109	0.00	109	0.00	109
9.03	MAX	3.15	109	10.19	105	0.00	109	0.00	109
	MIN	0.54	101	-6.30	109	0.00	109	0.00	109

MAX/MIN FORCE VALUES FOR MEMB 6, AMONGST ALL SECT LOCATIONS

	FY/ FZ	DIST DIST	LD LD	MZ/ MY	DIST DIST	LD LD	FX	DIST	LD
MAX.	3.72	0.00	109	28.42	0.00	107			
	0.00	0.00	101	0.00	0.00	101	7.72 C	0.00	107
MIN.	0.54	9.03	101	-6.30	9.03	109			
	0.00	9.03	109	0.00	9.03	109	2.62 C	9.03	101

********** END OF FORCE ENVELOPE FROM INTERNAL STORAGE **********

265. LOAD LIST 201 TO 209
266. PRINT FORCE ENVELOPE NSECTION 4 LIST 1 TO 6

MEMBER FORCE ENVELOPE

ALL UNITS ARE KIP FEET

MEMB	DISTANCE		FY	LD	MZ	LD	FZ	LD	MY	LD
1	0.00	MAX	-1.53	201	0.00	209	0.00	209	0.00	209
		MIN	-9.13	208	0.00	209	0.00	209	0.00	209
	0.38	MAX	-1.52	201	3.50	208	0.00	209	0.00	209
		MIN	-9.11	208	0.59	201	0.00	209	0.00	209
	0.77	MAX	-1.51	201	6.99	208	0.00	209	0.00	209
		MIN	-9.10	208	1.17	201	0.00	209	0.00	209
	1.15	MAX	-1.51	201	10.48	208	0.00	209	0.00	209
		MIN	-9.10	208	1.74	201	0.00	209	0.00	209
	1.53	MAX	-1.51	201	13.98	208	0.00	209	0.00	209
		MIN	-9.10	208	2.32	201	0.00	209	0.00	209
	1.92	MAX	-1.51	201	17.47	208	0.00	209	0.00	209
		MIN	-9.10	208	2.90	201	0.00	209	0.00	209
	2.30	MAX	-1.52	201	20.96	208	0.00	209	0.00	209
		MIN	-9.11	208	3.48	201	0.00	209	0.00	209
	2.69	MAX	-1.53	201	24.46	208	0.00	209	0.00	209
		MIN	-9.12	208	4.07	201	0.00	209	0.00	209
	3.07	MAX	-1.55	201	27.96	208	0.00	209	0.00	209
		MIN	-9.14	208	4.66	201	0.00	209	0.00	209
	3.45	MAX	-1.57	201	31.48	208	0.00	209	0.00	209
		MIN	-9.16	208	5.26	201	0.00	209	0.00	209
	3.84	MAX	-1.60	201	35.00	208	0.00	209	0.00	209
		MIN	-9.19	208	5.86	201	0.00	209	0.00	209
	4.22	MAX	-1.63	201	38.53	208	0.00	209	0.00	209
		MIN	-9.22	208	6.48	201	0.00	209	0.00	209
	4.60	MAX	-1.66	201	42.08	208	0.00	209	0.00	209
		MIN	-9.26	208	7.11	201	0.00	209	0.00	209

MAX/MIN FORCE VALUES FOR MEMB 1, AMONGST ALL SECT LOCATIONS

	FY/ FZ	DIST DIST	LD LD	MZ/ MY	DIST DIST	LD LD	FX	DIST	LD
MAX.	-1.51	1.53	201	42.08	4.60	208			
	0.00	0.00	201	0.00	0.00	201	8.65 C	4.60	204
MIN.	-9.26	4.60	208	0.00	0.00	209			
	0.00	4.60	209	0.00	4.60	209	5.13 C	0.00	203

2	0.00	MAX	-2.14	201	0.00	209	0.00	209	0.00	209
		MIN	-9.14	207	0.00	209	0.00	209	0.00	209
	0.38	MAX	-2.13	201	3.50	207	0.00	209	0.00	209
		MIN	-9.13	207	0.82	201	0.00	209	0.00	209

	0.77	MAX	-2.12	201	7.00	207	0.00	209	0.00	209
		MIN	-9.12	207	1.63	201	0.00	209	0.00	209
	1.15	MAX	-2.11	201	10.50	207	0.00	209	0.00	209
		MIN	-9.11	207	2.44	201	0.00	209	0.00	209
	1.53	MAX	-2.11	201	14.00	207	0.00	209	0.00	209
		MIN	-9.11	207	3.25	201	0.00	209	0.00	209
	1.92	MAX	-2.12	201	17.50	207	0.00	209	0.00	209
		MIN	-9.12	207	4.06	201	0.00	209	0.00	209
	2.30	MAX	-2.13	201	21.00	207	0.00	209	0.00	209
		MIN	-9.13	207	4.88	201	0.00	209	0.00	209
	2.69	MAX	-2.14	201	24.50	207	0.00	209	0.00	209
		MIN	-9.14	207	5.70	201	0.00	209	0.00	209
	3.07	MAX	-2.16	201	28.01	207	0.00	209	0.00	209
		MIN	-9.16	207	6.52	201	0.00	209	0.00	209
	3.45	MAX	-2.18	201	31.53	207	0.00	209	0.00	209
		MIN	-9.18	207	7.35	201	0.00	209	0.00	209
	3.84	MAX	-2.20	201	35.05	207	0.00	209	0.00	209
		MIN	-9.21	207	8.19	201	0.00	209	0.00	209
	4.22	MAX	-2.24	201	38.59	207	0.00	209	0.00	209
		MIN	-9.24	207	9.04	201	0.00	209	0.00	209
	4.60	MAX	-2.27	201	42.14	207	0.00	209	0.00	209
		MIN	-9.27	207	9.91	201	0.00	209	0.00	209

MAX/MIN FORCE VALUES FOR MEMB 2, AMONGST ALL SECT LOCATIONS

	FY/ FZ	DIST DIST	LD LD	MZ/ MY	DIST DIST	LD LD	FX	DIST	LD
MAX.	-2.11	1.53	201	42.14	4.60	207			
	0.00	0.00	201	0.00	0.00	201	8.74 C	4.60	209
MIN.	-9.27	4.60	207	0.00	0.00	209			
	0.00	4.60	209	0.00	4.60	209	1.81 C	0.00	201

3	0.00	MAX	6.73	204	39.99	208	0.00	209	0.00	209
		MIN	2.94	209	5.62	201	0.00	209	0.00	209
	0.75	MAX	6.68	204	37.19	208	0.00	209	0.00	209
		MIN	0.88	201	4.94	201	0.00	209	0.00	209
	1.50	MAX	5.51	205	34.43	208	0.00	209	0.00	209
		MIN	0.84	201	4.29	201	0.00	209	0.00	209
	2.26	MAX	5.46	205	31.69	208	0.00	209	0.00	209
		MIN	0.79	201	3.68	201	0.00	209	0.00	209
	3.01	MAX	5.42	205	29.00	208	0.00	209	0.00	209
		MIN	0.74	201	0.93	202	0.00	209	0.00	209
	3.76	MAX	5.37	205	26.34	208	0.00	209	0.00	209
		MIN	0.69	201	-2.04	202	0.00	209	0.00	209
	4.51	MAX	5.32	205	23.72	208	0.00	209	0.00	209
		MIN	0.65	201	-4.98	202	0.00	209	0.00	209
	5.27	MAX	5.27	205	21.13	208	0.00	209	0.00	209
		MIN	-0.04	202	-6.85	202	0.00	209	0.00	209
	6.02	MAX	4.31	206	18.70	209	0.00	209	0.00	209
		MIN	-0.08	202	-6.80	202	0.00	209	0.00	209
	6.77	MAX	4.26	206	16.80	209	0.00	209	0.00	209
		MIN	-0.13	202	-6.72	202	0.00	209	0.00	209

7.52	MAX	4.21	206	14.93	209	0.00	209	0.00	209
	MIN	-0.18	202	-7.52	203	0.00	209	0.00	209
8.28	MAX	4.17	206	13.09	209	0.00	209	0.00	209
	MIN	-0.23	202	-9.91	203	0.00	209	0.00	209
9.03	MAX	4.12	206	11.29	209	0.00	209	0.00	209
	MIN	-0.28	202	-12.27	203	0.00	209	0.00	209

MAX/MIN FORCE VALUES FOR MEMB 3, AMONGST ALL SECT LOCATIONS

	FY/ FZ	DIST DIST	LD LD	MZ/ MY	DIST DIST	LD LD	FX	DIST	LD
MAX.	6.73	0.00	204	39.99	0.00	208			
	0.00	0.00	201	0.00	0.00	201	10.97 C	0.00	207
MIN.	-0.28	9.03	202	-12.27	9.03	203			
	0.00	9.03	209	0.00	9.03	209	2.60 C	9.03	201

4	0.00	MAX	5.37	206	11.29	209	0.00	209	0.00	209
		MIN	0.24	202	-12.27	203	0.00	209	0.00	209
	1.00	MAX	5.31	206	7.82	209	0.00	209	0.00	209
		MIN	-0.18	203	-12.27	203	0.00	209	0.00	209
	2.00	MAX	4.29	207	4.42	209	0.00	209	0.00	209
		MIN	-0.25	203	-12.05	203	0.00	209	0.00	209
	3.00	MAX	4.23	207	2.01	209	0.00	209	0.00	209
		MIN	-0.31	203	-14.04	204	0.00	209	0.00	209
	4.00	MAX	4.16	207	-0.29	209	0.00	209	0.00	209
		MIN	-0.38	203	-16.98	204	0.00	209	0.00	209
	5.00	MAX	4.10	207	-2.53	209	0.00	209	0.00	209
		MIN	-0.44	203	-19.85	204	0.00	209	0.00	209
	6.00	MAX	4.03	207	-3.14	201	0.00	209	0.00	209
		MIN	-1.12	204	-18.91	204	0.00	209	0.00	209
	7.00	MAX	3.05	208	-3.40	201	0.00	209	0.00	209
		MIN	-1.19	204	-18.70	207	0.00	209	0.00	209
	8.00	MAX	2.99	208	-3.60	201	0.00	209	0.00	209
		MIN	-1.25	204	-20.48	205	0.00	209	0.00	209
	9.00	MAX	2.93	208	-3.73	201	0.00	209	0.00	209
		MIN	-1.32	204	-22.21	205	0.00	209	0.00	209
	10.00	MAX	2.86	208	-3.80	201	0.00	209	0.00	209
		MIN	-1.38	204	-23.88	205	0.00	209	0.00	209
	11.00	MAX	2.80	208	-3.81	201	0.00	209	0.00	209
		MIN	-2.33	205	-23.94	208	0.00	209	0.00	209
	12.00	MAX	1.76	209	-3.75	201	0.00	209	0.00	209
		MIN	-2.39	205	-22.97	208	0.00	209	0.00	209

MAX/MIN FORCE VALUES FOR MEMB 4, AMONGST ALL SECT LOCATIONS

	FY/ FZ	DIST DIST	LD LD	MZ/ MY	DIST DIST	LD LD	FX	DIST	LD

MAX.	5.37	0.00	206	11.29	0.00	209				
	0.00	0.00	201	0.00	0.00	201	10.30 C	0.00	207	
MIN.	-2.39	12.00	205	-23.94	11.00	208				
	0.00	12.00	209	0.00	12.00	209	2.54 C	12.00	201	

5	0.00	MAX	4.92	207	13.95	205	0.00	209	0.00	209
		MIN	0.86	201	-4.36	208	0.00	209	0.00	209
	1.00	MAX	4.85	207	10.83	205	0.00	209	0.00	209
		MIN	0.79	201	-6.26	208	0.00	209	0.00	209
	2.00	MAX	4.79	207	7.76	205	0.00	209	0.00	209
		MIN	0.73	201	-8.10	208	0.00	209	0.00	209
	3.00	MAX	4.73	207	5.16	204	0.00	209	0.00	209
		MIN	0.66	201	-10.31	209	0.00	209	0.00	209
	4.00	MAX	3.71	206	3.11	204	0.00	209	0.00	209
		MIN	0.60	201	-14.19	207	0.00	209	0.00	209
	5.00	MAX	3.64	206	1.41	203	0.00	209	0.00	209
		MIN	0.54	201	-15.61	209	0.00	209	0.00	209
	6.00	MAX	3.58	206	0.11	203	0.00	209	0.00	209
		MIN	0.47	201	-18.17	209	0.00	209	0.00	209
	7.00	MAX	3.52	206	-1.07	202	0.00	209	0.00	209
		MIN	0.41	201	-20.66	209	0.00	209	0.00	209
	8.00	MAX	3.45	206	-1.89	202	0.00	209	0.00	209
		MIN	-1.50	209	-22.94	209	0.00	209	0.00	209
	9.00	MAX	2.59	205	-2.64	202	0.00	209	0.00	209
		MIN	-1.57	209	-21.62	206	0.00	209	0.00	209
	10.00	MAX	2.52	205	-3.33	202	0.00	209	0.00	209
		MIN	-1.63	209	-21.08	206	0.00	209	0.00	209
	11.00	MAX	2.46	205	-3.63	201	0.00	209	0.00	209
		MIN	-1.70	209	-21.77	208	0.00	209	0.00	209
	12.00	MAX	2.39	205	-3.75	201	0.00	209	0.00	209
		MIN	-1.76	209	-22.97	208	0.00	209	0.00	209

MAX/MIN FORCE VALUES FOR MEMB 5, AMONGST ALL SECT LOCATIONS

	FY/ FZ	DIST DIST	LD LD	MZ/ MY	DIST DIST	LD LD	FX	DIST	LD
MAX.	4.92	0.00	207	13.95	0.00	205			
	0.00	0.00	201	0.00	0.00	201	10.30 C	0.00	207
MIN.	-1.76	12.00	209	-22.97	12.00	208			
	0.00	12.00	209	0.00	12.00	209	2.54 C	12.00	201

6	0.00	MAX	6.22	209	39.94	207	0.00	209	0.00	209
		MIN	1.11	201	9.34	201	0.00	209	0.00	209
	0.75	MAX	6.17	209	36.82	207	0.00	209	0.00	209
		MIN	1.06	201	8.53	201	0.00	209	0.00	209
	1.50	MAX	6.13	209	33.73	207	0.00	209	0.00	209
		MIN	1.01	201	7.75	201	0.00	209	0.00	209
	2.26	MAX	6.08	209	31.21	206	0.00	209	0.00	209
		MIN	0.97	201	7.00	201	0.00	209	0.00	209
	3.01	MAX	6.03	209	28.86	206	0.00	209	0.00	209

	MIN	0.92	201	6.29	201	0.00	209	0.00	209
3.76	MAX	5.98	209	26.54	206	0.00	209	0.00	209
	MIN	0.87	201	5.62	201	0.00	209	0.00	209
4.51	MAX	4.81	208	24.26	206	0.00	209	0.00	209
	MIN	0.82	201	4.99	201	0.00	209	0.00	209
5.27	MAX	4.76	208	22.10	205	0.00	209	0.00	209
	MIN	0.77	201	4.38	201	0.00	209	0.00	209
6.02	MAX	4.71	208	20.40	205	0.00	209	0.00	209
	MIN	0.73	201	3.77	209	0.00	209	0.00	209
6.77	MAX	4.67	208	18.73	205	0.00	209	0.00	209
	MIN	0.68	201	2.31	209	0.00	209	0.00	209
7.52	MAX	4.62	208	17.10	205	0.00	209	0.00	209
	MIN	0.63	201	0.88	209	0.00	209	0.00	209
8.28	MAX	4.57	208	15.51	205	0.00	209	0.00	209
	MIN	0.58	201	-1.37	208	0.00	209	0.00	209
9.03	MAX	3.60	207	13.95	205	0.00	209	0.00	209
	MIN	0.54	201	-4.36	208	0.00	209	0.00	209

MAX/MIN FORCE VALUES FOR MEMB 6, AMONGST ALL SECT LOCATIONS

	FY/ FZ	DIST DIST	LD LD	MZ/ MY	DIST DIST	LD LD	FX	DIST	LD
MAX.	6.22	0.00	209	39.94	0.00	207			
	0.00	0.00	201	0.00	0.00	201	10.93 C	0.00	208
MIN.	0.54	9.03	201	-4.36	9.03	208			
	0.00	9.03	209	0.00	9.03	209	2.62 C	9.03	201

********** END OF FORCE ENVELOPE FROM INTERNAL STORAGE **********

267. LOAD LIST 301 TO 307
268. PRINT FORCE ENVELOPE NSECTION 4 LIST 1 TO 6

MEMBER FORCE ENVELOPE

ALL UNITS ARE KIP FEET

MEMB	DISTANCE		FY	LD	MZ	LD	FZ	LD	MY	LD
1	0.00	MAX	-1.59	301	0.00	307	0.00	307	0.00	307
		MIN	-8.07	307	0.00	307	0.00	307	0.00	307
	0.38	MAX	-1.58	301	3.09	307	0.00	307	0.00	307
		MIN	-8.05	307	0.61	301	0.00	307	0.00	307
	0.77	MAX	-1.57	301	6.18	307	0.00	307	0.00	307
		MIN	-8.05	307	1.21	301	0.00	307	0.00	307
	1.15	MAX	-1.56	301	9.27	307	0.00	307	0.00	307
		MIN	-8.04	307	1.81	301	0.00	307	0.00	307
	1.53	MAX	-1.56	301	12.35	307	0.00	307	0.00	307
		MIN	-8.04	307	2.41	301	0.00	307	0.00	307
	1.92	MAX	-1.57	301	15.44	307	0.00	307	0.00	307
		MIN	-8.05	307	3.01	301	0.00	307	0.00	307
	2.30	MAX	-1.58	301	18.53	307	0.00	307	0.00	307
		MIN	-8.05	307	3.62	301	0.00	307	0.00	307
	2.69	MAX	-1.59	301	21.62	307	0.00	307	0.00	307
		MIN	-8.07	307	4.22	301	0.00	307	0.00	307
	3.07	MAX	-1.61	301	24.72	307	0.00	307	0.00	307
		MIN	-8.09	307	4.84	301	0.00	307	0.00	307
	3.45	MAX	-1.63	301	27.83	307	0.00	307	0.00	307
		MIN	-8.11	307	5.46	301	0.00	307	0.00	307
	3.84	MAX	-1.66	301	30.94	307	0.00	307	0.00	307
		MIN	-8.13	307	6.09	301	0.00	307	0.00	307
	4.22	MAX	-1.69	301	34.07	307	0.00	307	0.00	307
		MIN	-8.16	307	6.73	301	0.00	307	0.00	307
	4.60	MAX	-1.72	301	37.21	307	0.00	307	0.00	307
		MIN	-8.20	307	7.39	301	0.00	307	0.00	307

MAX/MIN FORCE VALUES FOR MEMB 1, AMONGST ALL SECT LOCATIONS

	FY/ FZ	DIST DIST	LD LD	MZ/ MY	DIST DIST	LD LD	FX	DIST	LD
MAX.	-1.56	1.53	301	37.21	4.60	307			
	0.00	0.00	301	0.00	0.00	301	7.55 C	4.60	302
MIN.	-8.20	4.60	307	0.00	0.00	307			
	0.00	4.60	307	0.00	4.60	307	4.65 C	0.00	301

2	0.00	MAX	-2.07	301	0.00	307	0.00	307	0.00	307
		MIN	-8.07	307	0.00	307	0.00	307	0.00	307
	0.38	MAX	-2.05	301	3.09	307	0.00	307	0.00	307
		MIN	-8.05	307	0.79	301	0.00	307	0.00	307

	0.77	MAX	-2.04	301	6.18	307	0.00	307	0.00	307
		MIN	-8.04	307	1.58	301	0.00	307	0.00	307
	1.15	MAX	-2.04	301	9.27	307	0.00	307	0.00	307
		MIN	-8.04	307	2.36	301	0.00	307	0.00	307
	1.53	MAX	-2.04	301	12.35	307	0.00	307	0.00	307
		MIN	-8.04	307	3.14	301	0.00	307	0.00	307
	1.92	MAX	-2.04	301	15.44	307	0.00	307	0.00	307
		MIN	-8.04	307	3.92	301	0.00	307	0.00	307
	2.30	MAX	-2.05	301	18.52	307	0.00	307	0.00	307
		MIN	-8.05	307	4.71	301	0.00	307	0.00	307
	2.69	MAX	-2.06	301	21.62	307	0.00	307	0.00	307
		MIN	-8.07	307	5.50	301	0.00	307	0.00	307
	3.07	MAX	-2.08	301	24.71	307	0.00	307	0.00	307
		MIN	-8.08	307	6.29	301	0.00	307	0.00	307
	3.45	MAX	-2.10	301	27.82	307	0.00	307	0.00	307
		MIN	-8.11	307	7.10	301	0.00	307	0.00	307
	3.84	MAX	-2.13	301	30.94	307	0.00	307	0.00	307
		MIN	-8.13	307	7.91	301	0.00	307	0.00	307
	4.22	MAX	-2.16	301	34.06	307	0.00	307	0.00	307
		MIN	-8.16	307	8.73	301	0.00	307	0.00	307
	4.60	MAX	-2.20	301	37.20	307	0.00	307	0.00	307
		MIN	-8.20	307	9.57	301	0.00	307	0.00	307

MAX/MIN FORCE VALUES FOR MEMB 2, AMONGST ALL SECT LOCATIONS

	FY/ FZ	DIST DIST	LD LD	MZ/ MY	DIST DIST	LD LD	FX	DIST	LD
MAX.	-2.04	1.53	301	37.20	4.60	307			
	0.00	0.00	301	0.00	0.00	301	5.81 C	4.60	307
MIN.	-8.20	4.60	307	0.00	0.00	307			
	0.00	4.60	307	0.00	4.60	307	1.78 C	0.00	301

3	0.00	MAX	6.51	302	35.39	307	0.00	307	0.00	307
		MIN	3.24	307	6.11	301	0.00	307	0.00	307
	0.75	MAX	5.68	303	32.97	307	0.00	307	0.00	307
		MIN	0.91	301	5.40	301	0.00	307	0.00	307
	1.50	MAX	5.63	303	30.59	307	0.00	307	0.00	307
		MIN	0.87	301	3.99	302	0.00	307	0.00	307
	2.26	MAX	5.59	303	28.25	307	0.00	307	0.00	307
		MIN	0.82	301	1.46	302	0.00	307	0.00	307
	3.01	MAX	5.54	303	25.94	307	0.00	307	0.00	307
		MIN	0.77	301	-1.04	302	0.00	307	0.00	307
	3.76	MAX	5.49	303	23.66	307	0.00	307	0.00	307
		MIN	0.72	301	-3.50	302	0.00	307	0.00	307
	4.51	MAX	4.78	304	21.43	307	0.00	307	0.00	307
		MIN	0.17	302	-5.51	303	0.00	307	0.00	307
	5.27	MAX	4.74	304	19.23	307	0.00	307	0.00	307
		MIN	0.12	302	-7.31	303	0.00	307	0.00	307
	6.02	MAX	4.69	304	17.06	307	0.00	307	0.00	307
		MIN	0.08	302	-9.08	303	0.00	307	0.00	307
	6.77	MAX	4.64	304	14.93	307	0.00	307	0.00	307
		MIN	0.03	302	-10.81	303	0.00	307	0.00	307

	7.52	MAX	4.59	304	12.84	307	0.00	307	0.00	307
		MIN	-0.02	302	-12.50	303	0.00	307	0.00	307
	8.28	MAX	3.93	305	10.78	307	0.00	307	0.00	307
		MIN	-0.85	303	-14.02	304	0.00	307	0.00	307
	9.03	MAX	3.88	305	8.76	307	0.00	307	0.00	307
		MIN	-0.90	303	-15.15	304	0.00	307	0.00	307

MAX/MIN FORCE VALUES FOR MEMB 3, AMONGST ALL SECT LOCATIONS

	FY/ FZ	DIST DIST	LD LD	MZ/ MY	DIST DIST	LD LD	FX	DIST	LD
MAX.	6.51	0.00	302	35.39	0.00	307			
	0.00	0.00	301	0.00	0.00	301	9.51 C	0.00	307
MIN.	-0.90	9.03	303	-15.15	9.03	304			
	0.00	9.03	307	0.00	9.03	307	2.53 C	9.03	301

4	0.00	MAX	4.92	305	8.76	307	0.00	307	0.00	307
		MIN	-0.20	303	-15.15	304	0.00	307	0.00	307
	1.00	MAX	4.86	305	4.98	307	0.00	307	0.00	307
		MIN	-0.26	303	-17.48	304	0.00	307	0.00	307
	2.00	MAX	4.80	305	1.26	307	0.00	307	0.00	307
		MIN	-0.33	303	-19.75	304	0.00	307	0.00	307
	3.00	MAX	4.18	306	-1.79	301	0.00	307	0.00	307
		MIN	-0.88	304	-19.24	305	0.00	307	0.00	307
	4.00	MAX	4.11	306	-2.27	301	0.00	307	0.00	307
		MIN	-0.94	304	-20.89	305	0.00	307	0.00	307
	5.00	MAX	4.05	306	-2.68	301	0.00	307	0.00	307
		MIN	-1.01	304	-22.48	305	0.00	307	0.00	307
	6.00	MAX	3.98	306	-3.03	301	0.00	307	0.00	307
		MIN	-1.07	304	-24.00	305	0.00	307	0.00	307
	7.00	MAX	3.36	307	-3.31	301	0.00	307	0.00	307
		MIN	-1.62	305	-24.19	306	0.00	307	0.00	307
	8.00	MAX	3.30	307	-3.53	301	0.00	307	0.00	307
		MIN	-1.69	305	-25.02	306	0.00	307	0.00	307
	9.00	MAX	3.24	307	-3.68	301	0.00	307	0.00	307
		MIN	-1.75	305	-25.80	306	0.00	307	0.00	307
	10.00	MAX	3.17	307	-3.77	301	0.00	307	0.00	307
		MIN	-1.82	305	-26.51	306	0.00	307	0.00	307
	11.00	MAX	0.06	307	-3.80	301	0.00	307	0.00	307
		MIN	-2.44	306	-26.38	307	0.00	307	0.00	307
	12.00	MAX	-0.01	307	-3.76	301	0.00	307	0.00	307
		MIN	-2.50	306	-26.40	307	0.00	307	0.00	307

MAX/MIN FORCE VALUES FOR MEMB 4, AMONGST ALL SECT LOCATIONS

FY/ FZ	DIST DIST	LD LD	MZ/ MY	DIST DIST	LD LD	FX	DIST	LD

MAX.	4.92	0.00	305	8.76	0.00	307				
	0.00	0.00	301	0.00	0.00	301	9.04 C	0.00	307	
MIN.	-2.50	12.00	306	-26.51	10.00	306				
	0.00	12.00	307	0.00	12.00	307	2.46 C	12.00	301	

5	0.00	MAX	3.82	307	14.33	305	0.00	307	0.00	307
		MIN	0.84	301	1.68	301	0.00	307	0.00	307
	1.00	MAX	3.76	307	11.65	305	0.00	307	0.00	307
		MIN	0.77	301	0.88	301	0.00	307	0.00	307
	2.00	MAX	3.70	307	9.21	304	0.00	307	0.00	307
		MIN	0.71	301	0.13	301	0.00	307	0.00	307
	3.00	MAX	3.63	307	7.15	304	0.00	307	0.00	307
		MIN	0.65	301	-2.53	307	0.00	307	0.00	307
	4.00	MAX	3.57	307	5.15	304	0.00	307	0.00	307
		MIN	0.58	301	-6.13	307	0.00	307	0.00	307
	5.00	MAX	3.50	307	3.22	304	0.00	307	0.00	307
		MIN	0.52	301	-9.67	307	0.00	307	0.00	307
	6.00	MAX	3.44	307	1.35	304	0.00	307	0.00	307
		MIN	0.45	301	-13.14	307	0.00	307	0.00	307
	7.00	MAX	3.38	307	-0.05	303	0.00	307	0.00	307
		MIN	0.39	301	-16.55	307	0.00	307	0.00	307
	8.00	MAX	3.31	307	-1.31	303	0.00	307	0.00	307
		MIN	0.33	301	-19.89	307	0.00	307	0.00	307
	9.00	MAX	3.25	307	-2.50	303	0.00	307	0.00	307
		MIN	0.26	301	-23.17	307	0.00	307	0.00	307
	10.00	MAX	2.63	306	-3.17	302	0.00	307	0.00	307
		MIN	0.13	307	-26.26	307	0.00	307	0.00	307
	11.00	MAX	2.56	306	-3.66	301	0.00	307	0.00	307
		MIN	0.07	307	-26.37	307	0.00	307	0.00	307
	12.00	MAX	2.50	306	-3.76	301	0.00	307	0.00	307
		MIN	0.01	307	-26.40	307	0.00	307	0.00	307

MAX/MIN FORCE VALUES FOR MEMB 5, AMONGST ALL SECT LOCATIONS

	FY/ FZ	DIST DIST	LD LD	MZ/ MY	DIST DIST	LD LD	FX	DIST	LD
MAX.	3.82	0.00	307	14.33	0.00	305			
	0.00	0.00	301	0.00	0.00	301	9.04 C	0.00	307
MIN.	0.01	12.00	307	-26.40	12.00	307			
	0.00	12.00	307	0.00	12.00	307	2.46 C	12.00	301

6	0.00	MAX	3.25	307	35.38	307	0.00	307	0.00	307
		MIN	1.10	301	9.02	301	0.00	307	0.00	307
	0.75	MAX	3.20	307	32.95	307	0.00	307	0.00	307
		MIN	1.05	301	8.21	301	0.00	307	0.00	307
	1.50	MAX	3.15	307	30.84	306	0.00	307	0.00	307
		MIN	1.00	301	7.44	301	0.00	307	0.00	307
	2.26	MAX	3.10	307	28.88	306	0.00	307	0.00	307
		MIN	0.96	301	6.70	301	0.00	307	0.00	307
	3.01	MAX	3.06	307	26.95	306	0.00	307	0.00	307

	MIN	0.91	301	6.00	301	0.00	307	0.00	307
3.76	MAX	3.01	307	25.07	306	0.00	307	0.00	307
	MIN	0.86	301	5.33	301	0.00	307	0.00	307
4.51	MAX	2.96	307	23.21	306	0.00	307	0.00	307
	MIN	0.81	301	4.70	301	0.00	307	0.00	307
5.27	MAX	2.91	307	21.40	306	0.00	307	0.00	307
	MIN	0.76	301	4.11	301	0.00	307	0.00	307
6.02	MAX	2.86	307	19.71	305	0.00	307	0.00	307
	MIN	0.72	301	3.55	301	0.00	307	0.00	307
6.77	MAX	2.82	307	18.31	305	0.00	307	0.00	307
	MIN	0.67	301	3.03	301	0.00	307	0.00	307
7.52	MAX	2.77	307	16.95	305	0.00	307	0.00	307
	MIN	0.62	301	2.54	301	0.00	307	0.00	307
8.28	MAX	2.72	307	15.62	305	0.00	307	0.00	307
	MIN	0.57	301	2.09	301	0.00	307	0.00	307
9.03	MAX	2.67	307	14.33	305	0.00	307	0.00	307
	MIN	0.53	301	1.68	301	0.00	307	0.00	307

MAX/MIN FORCE VALUES FOR MEMB 6, AMONGST ALL SECT LOCATIONS

	FY/ FZ	DIST DIST	LD LD	MZ/ MY	DIST DIST	LD LD	FX	DIST	LD
MAX.	3.25	0.00	307	35.38	0.00	307			
	0.00	0.00	301	0.00	0.00	301	9.51 C	0.00	307
MIN.	0.53	9.03	301	1.68	9.03	301			
	0.00	9.03	307	0.00	9.03	307	2.55 C	9.03	301

********** END OF FORCE ENVELOPE FROM INTERNAL STORAGE **********

269. LOAD LIST 401 TO 408
270. PRINT FORCE ENVELOPE NSECTION 4 LIST 1 TO 6

MEMBER FORCE ENVELOPE

ALL UNITS ARE KIP FEET

MEMB	DISTANCE		FY	LD	MZ	LD	FZ	LD	MY	LD
1	0.00	MAX	0.17	401	0.00	408	0.00	408	0.00	408
		MIN	-4.96	407	0.00	408	0.00	408	0.00	408
	0.38	MAX	0.18	401	1.90	407	0.00	408	0.00	408
		MIN	-4.95	407	-0.07	401	0.00	408	0.00	408
	0.77	MAX	0.19	401	3.80	407	0.00	408	0.00	408
		MIN	-4.94	407	-0.14	401	0.00	408	0.00	408
	1.15	MAX	0.19	401	5.69	407	0.00	408	0.00	408
		MIN	-4.93	407	-0.21	401	0.00	408	0.00	408
	1.53	MAX	0.19	401	7.58	407	0.00	408	0.00	408
		MIN	-4.93	407	-0.29	401	0.00	408	0.00	408
	1.92	MAX	0.19	401	9.47	407	0.00	408	0.00	408
		MIN	-4.94	407	-0.36	401	0.00	408	0.00	408
	2.30	MAX	0.18	401	11.37	407	0.00	408	0.00	408
		MIN	-4.95	407	-0.43	401	0.00	408	0.00	408
	2.69	MAX	0.17	401	13.27	407	0.00	408	0.00	408
		MIN	-4.96	407	-0.50	401	0.00	408	0.00	408
	3.07	MAX	0.15	401	15.18	407	0.00	408	0.00	408
		MIN	-4.98	407	-0.56	401	0.00	408	0.00	408
	3.45	MAX	0.13	401	17.09	407	0.00	408	0.00	408
		MIN	-5.00	407	-0.61	401	0.00	408	0.00	408
	3.84	MAX	0.10	401	19.01	407	0.00	408	0.00	408
		MIN	-5.02	407	-0.65	401	0.00	408	0.00	408
	4.22	MAX	0.07	401	20.95	407	0.00	408	0.00	408
		MIN	-5.06	407	-0.69	401	0.00	408	0.00	408
	4.60	MAX	0.03	401	22.89	407	0.00	408	0.00	408
		MIN	-5.09	407	-0.71	401	0.00	408	0.00	408

MAX/MIN FORCE VALUES FOR MEMB 1, AMONGST ALL SECT LOCATIONS

	FY/ FZ	DIST DIST	LD LD	MZ/ MY	DIST DIST	LD LD	FX	DIST	LD
MAX.	0.19	1.53	401	22.89	4.60	407			
	0.00	0.00	401	0.00	0.00	401	5.82 C	4.60	406
MIN.	-5.09	4.60	407	-0.71	4.60	401			
	0.00	4.60	408	0.00	4.60	408	1.90 C	0.00	401

2	0.00	MAX	-0.14	401	0.00	408	0.00	408	0.00	408
		MIN	-5.01	407	0.00	408	0.00	408	0.00	408
	0.38	MAX	-0.12	401	1.92	407	0.00	408	0.00	408
		MIN	-5.00	407	0.05	401	0.00	408	0.00	408

0.77	MAX	-0.11	401	3.84	407	0.00	408	0.00	408
	MIN	-4.99	407	0.10	401	0.00	408	0.00	408
1.15	MAX	-0.11	401	5.75	407	0.00	408	0.00	408
	MIN	-4.99	407	0.14	401	0.00	408	0.00	408
1.53	MAX	-0.11	401	7.67	407	0.00	408	0.00	408
	MIN	-4.99	407	0.18	401	0.00	408	0.00	408
1.92	MAX	-0.11	401	9.58	407	0.00	408	0.00	408
	MIN	-4.99	407	0.22	401	0.00	408	0.00	408
2.30	MAX	-0.12	401	11.50	407	0.00	408	0.00	408
	MIN	-5.00	407	0.27	401	0.00	408	0.00	408
2.69	MAX	-0.14	401	13.42	407	0.00	408	0.00	408
	MIN	-5.01	407	0.32	401	0.00	408	0.00	408
3.07	MAX	-0.15	401	15.35	407	0.00	408	0.00	408
	MIN	-5.03	407	0.37	401	0.00	408	0.00	408
3.45	MAX	-0.18	401	17.28	407	0.00	408	0.00	408
	MIN	-5.05	407	0.44	401	0.00	408	0.00	408
3.84	MAX	-0.20	401	19.22	407	0.00	408	0.00	408
	MIN	-5.08	407	0.51	401	0.00	408	0.00	408
4.22	MAX	-0.23	401	21.18	407	0.00	408	0.00	408
	MIN	-5.11	407	0.59	401	0.00	408	0.00	408
4.60	MAX	-0.27	401	23.15	407	0.00	408	0.00	408
	MIN	-5.15	407	0.69	401	0.00	408	0.00	408

MAX/MIN FORCE VALUES FOR MEMB 2, AMONGST ALL SECT LOCATIONS

	FY/ FZ	DIST DIST	LD LD	MZ/ MY	DIST DIST	LD LD	FX	DIST	LD
MAX.	-0.11	1.53	401	23.15	4.60	407			
	0.00	0.00	401	0.00	0.00	401	5.61 C	4.60	408
MIN.	-5.15	4.60	407	0.00	0.00	408			
	0.00	4.60	408	0.00	4.60	408	0.07 C	0.00	401

3	0.00	MAX	4.37	406	21.41	407	0.00	408	0.00	408
		MIN	1.38	405	-1.21	401	0.00	408	0.00	408
	0.75	MAX	3.32	407	18.91	407	0.00	408	0.00	408
		MIN	-0.08	401	-1.15	401	0.00	408	0.00	408
	1.50	MAX	3.32	407	16.42	407	0.00	408	0.00	408
		MIN	-0.08	401	-1.12	402	0.00	408	0.00	408
	2.26	MAX	3.32	407	14.42	408	0.00	408	0.00	408
		MIN	-0.08	401	-3.04	402	0.00	408	0.00	408
	3.01	MAX	3.32	407	13.37	405	0.00	408	0.00	408
		MIN	-0.08	401	-4.01	402	0.00	408	0.00	408
	3.76	MAX	3.32	407	12.34	405	0.00	408	0.00	408
		MIN	-0.08	401	-4.97	402	0.00	408	0.00	408
	4.51	MAX	3.32	407	11.30	405	0.00	408	0.00	408
		MIN	-0.08	401	-5.94	402	0.00	408	0.00	408
	5.27	MAX	3.32	407	10.27	405	0.00	408	0.00	408
		MIN	-0.08	401	-6.90	402	0.00	408	0.00	408
	6.02	MAX	2.55	403	9.23	405	0.00	408	0.00	408
		MIN	-0.65	402	-7.83	402	0.00	408	0.00	408
	6.77	MAX	2.55	403	8.20	405	0.00	408	0.00	408
		MIN	-0.65	402	-7.34	402	0.00	408	0.00	408

7.52	MAX	2.55	403	7.16	405	0.00	408	0.00	408
	MIN	-0.65	402	-8.35	403	0.00	408	0.00	408
8.28	MAX	2.32	408	6.13	405	0.00	408	0.00	408
	MIN	-0.65	402	-9.73	403	0.00	408	0.00	408
9.03	MAX	2.32	408	5.09	405	0.00	408	0.00	408
	MIN	-0.65	402	-10.19	403	0.00	408	0.00	408

MAX/MIN FORCE VALUES FOR MEMB 3, AMONGST ALL SECT LOCATIONS

	FY/ FZ	DIST DIST	LD LD	MZ/ MY	DIST DIST	LD LD	FX	DIST	LD
MAX.	4.37	0.00	406	21.41	0.00	407			
	0.00	0.00	401	0.00	0.00	401	6.29 C	0.00	407
MIN.	-0.65	9.03	402	-10.19	9.03	403			
	0.00	9.03	408	0.00	9.03	408	0.27 C	9.03	401

4	0.00	MAX	3.05	408	5.09	405	0.00	408	0.00	408
		MIN	-0.44	402	-10.19	403	0.00	408	0.00	408
	1.00	MAX	3.05	408	3.87	406	0.00	408	0.00	408
		MIN	-0.44	402	-11.21	403	0.00	408	0.00	408
	2.00	MAX	3.05	408	2.73	406	0.00	408	0.00	408
		MIN	-0.44	402	-12.23	403	0.00	408	0.00	408
	3.00	MAX	2.48	404	1.58	406	0.00	408	0.00	408
		MIN	-0.93	403	-11.38	403	0.00	408	0.00	408
	4.00	MAX	2.48	404	0.43	406	0.00	408	0.00	408
		MIN	-0.93	403	-12.06	404	0.00	408	0.00	408
	5.00	MAX	1.95	405	-0.28	401	0.00	408	0.00	408
		MIN	-0.93	403	-12.66	404	0.00	408	0.00	408
	6.00	MAX	1.95	405	-0.23	401	0.00	408	0.00	408
		MIN	-0.93	403	-13.19	404	0.00	408	0.00	408
	7.00	MAX	1.95	405	-0.19	401	0.00	408	0.00	408
		MIN	-0.93	403	-13.72	404	0.00	408	0.00	408
	8.00	MAX	1.95	405	-0.14	401	0.00	408	0.00	408
		MIN	-0.93	403	-14.25	404	0.00	408	0.00	408
	9.00	MAX	1.95	405	-0.10	401	0.00	408	0.00	408
		MIN	-1.42	404	-12.91	404	0.00	408	0.00	408
	10.00	MAX	1.95	405	-0.05	401	0.00	408	0.00	408
		MIN	-1.42	404	-14.37	405	0.00	408	0.00	408
	11.00	MAX	1.15	406	-0.01	401	0.00	408	0.00	408
		MIN	-1.42	404	-14.44	405	0.00	408	0.00	408
	12.00	MAX	1.15	406	0.04	401	0.00	408	0.00	408
		MIN	-1.42	404	-14.44	405	0.00	408	0.00	408

MAX/MIN FORCE VALUES FOR MEMB 4, AMONGST ALL SECT LOCATIONS

	FY/ FZ	DIST DIST	LD LD	MZ/ MY	DIST DIST	LD LD	FX	DIST	LD

MAX.	3.05	0.00	408	5.09	0.00	405				
	0.00	0.00	401	0.00	0.00	401	5.83 C	0.00	407	
MIN.	-1.42	12.00	404	-14.44	11.00	405				
	0.00	12.00	408	0.00	12.00	408	0.28 C	12.00	401	

5	0.00	MAX	2.75	406	8.40	404	0.00	408	0.00	408
		MIN	0.04	401	-3.00	407	0.00	408	0.00	408
	1.00	MAX	2.75	406	7.21	403	0.00	408	0.00	408
		MIN	0.04	401	-4.78	407	0.00	408	0.00	408
	2.00	MAX	2.75	406	6.28	403	0.00	408	0.00	408
		MIN	-0.17	407	-6.48	407	0.00	408	0.00	408
	3.00	MAX	2.75	406	5.35	403	0.00	408	0.00	408
		MIN	-0.17	407	-7.55	406	0.00	408	0.00	408
	4.00	MAX	1.95	405	4.42	403	0.00	408	0.00	408
		MIN	-0.17	407	-10.23	406	0.00	408	0.00	408
	5.00	MAX	1.95	405	3.49	403	0.00	408	0.00	408
		MIN	-0.17	407	-11.03	406	0.00	408	0.00	408
	6.00	MAX	1.95	405	2.57	403	0.00	408	0.00	408
		MIN	-0.17	407	-11.83	406	0.00	408	0.00	408
	7.00	MAX	1.95	405	1.64	402	0.00	408	0.00	408
		MIN	-0.17	407	-12.63	406	0.00	408	0.00	408
	8.00	MAX	1.95	405	1.20	402	0.00	408	0.00	408
		MIN	-1.15	406	-13.36	406	0.00	408	0.00	408
	9.00	MAX	1.95	405	0.75	402	0.00	408	0.00	408
		MIN	-1.15	406	-12.56	405	0.00	408	0.00	408
	10.00	MAX	1.42	404	0.31	402	0.00	408	0.00	408
		MIN	-1.15	406	-14.43	405	0.00	408	0.00	408
	11.00	MAX	1.42	404	0.08	401	0.00	408	0.00	408
		MIN	-1.15	406	-14.44	405	0.00	408	0.00	408
	12.00	MAX	1.42	404	0.04	401	0.00	408	0.00	408
		MIN	-1.15	406	-14.44	405	0.00	408	0.00	408

MAX/MIN FORCE VALUES FOR MEMB 5, AMONGST ALL SECT LOCATIONS

	FY/ FZ	DIST DIST	LD LD	MZ/ MY	DIST DIST	LD LD	FX	DIST	LD
MAX.	2.75	0.00	406	8.40	0.00	404			
	0.00	0.00	401	0.00	0.00	401	5.83 C	0.00	407
MIN.	-1.15	12.00	406	-14.44	12.00	405			
	0.00	12.00	408	0.00	12.00	408	0.28 C	12.00	401

6	0.00	MAX	4.02	408	21.75	407	0.00	408	0.00	408
		MIN	0.01	401	0.65	401	0.00	408	0.00	408
	0.75	MAX	4.02	408	19.51	407	0.00	408	0.00	408
		MIN	0.01	401	0.65	401	0.00	408	0.00	408
	1.50	MAX	4.02	408	17.27	407	0.00	408	0.00	408
		MIN	0.01	401	0.64	401	0.00	408	0.00	408
	2.26	MAX	2.98	407	15.02	407	0.00	408	0.00	408
		MIN	0.01	401	0.63	401	0.00	408	0.00	408
	3.01	MAX	2.98	407	13.80	404	0.00	408	0.00	408

	MIN	0.01	401	0.63	401	0.00	408	0.00	408
3.76	MAX	2.98	407	13.12	404	0.00	408	0.00	408
	MIN	0.01	401	0.62	401	0.00	408	0.00	408
4.51	MAX	2.98	407	12.45	404	0.00	408	0.00	408
	MIN	0.01	401	0.61	401	0.00	408	0.00	408
5.27	MAX	2.98	407	11.77	404	0.00	408	0.00	408
	MIN	0.01	401	0.60	401	0.00	408	0.00	408
6.02	MAX	2.98	407	11.10	404	0.00	408	0.00	408
	MIN	0.01	401	0.60	401	0.00	408	0.00	408
6.77	MAX	2.98	407	10.43	404	0.00	408	0.00	408
	MIN	0.01	401	0.59	401	0.00	408	0.00	408
7.52	MAX	2.98	407	9.75	404	0.00	408	0.00	408
	MIN	0.01	401	-0.66	407	0.00	408	0.00	408
8.28	MAX	2.09	406	9.08	404	0.00	408	0.00	408
	MIN	0.01	401	-2.21	407	0.00	408	0.00	408
9.03	MAX	2.09	406	8.40	404	0.00	408	0.00	408
	MIN	0.01	401	-3.00	407	0.00	408	0.00	408

MAX/MIN FORCE VALUES FOR MEMB 6, AMONGST ALL SECT LOCATIONS

	FY/ FZ	DIST DIST	LD LD	MZ/ MY	DIST DIST	LD LD	FX	DIST	LD
MAX.	4.02	0.00	408	21.75	0.00	407			
	0.00	0.00	401	0.00	0.00	401	6.25 C	0.00	407
MIN.	0.01	9.03	401	-3.00	9.03	407			
	0.00	9.03	408	0.00	9.03	408	0.28 C	9.03	401

********** END OF FORCE ENVELOPE FROM INTERNAL STORAGE **********

271. LOAD LIST 501 TO 508
272. PRINT FORCE ENVELOPE NSECTION 4 LIST 1 TO 6

MEMBER FORCE ENVELOPE

ALL UNITS ARE KIP FEET

MEMB	DISTANCE		FY	LD	MZ	LD	FZ	LD	MY	LD
1	0.00	MAX	0.20	501	0.00	508	0.00	508	0.00	508
		MIN	-7.24	505	0.00	508	0.00	508	0.00	508
	0.38	MAX	0.21	501	2.78	505	0.00	508	0.00	508
		MIN	-7.23	505	-0.08	501	0.00	508	0.00	508
	0.77	MAX	0.22	501	5.55	505	0.00	508	0.00	508
		MIN	-7.22	505	-0.16	501	0.00	508	0.00	508
	1.15	MAX	0.23	501	8.32	505	0.00	508	0.00	508
		MIN	-7.22	505	-0.25	501	0.00	508	0.00	508
	1.53	MAX	0.23	501	11.09	505	0.00	508	0.00	508
		MIN	-7.22	505	-0.34	501	0.00	508	0.00	508
	1.92	MAX	0.22	501	13.86	505	0.00	508	0.00	508
		MIN	-7.22	505	-0.42	501	0.00	508	0.00	508
	2.30	MAX	0.21	501	16.63	505	0.00	508	0.00	508
		MIN	-7.23	505	-0.51	501	0.00	508	0.00	508
	2.69	MAX	0.20	501	19.41	505	0.00	508	0.00	508
		MIN	-7.24	505	-0.59	501	0.00	508	0.00	508
	3.07	MAX	0.18	501	22.19	505	0.00	508	0.00	508
		MIN	-7.26	505	-0.66	501	0.00	508	0.00	508
	3.45	MAX	0.16	501	24.98	505	0.00	508	0.00	508
		MIN	-7.28	505	-0.73	501	0.00	508	0.00	508
	3.84	MAX	0.13	501	27.78	505	0.00	508	0.00	508
		MIN	-7.31	505	-0.78	501	0.00	508	0.00	508
	4.22	MAX	0.10	501	30.59	505	0.00	508	0.00	508
		MIN	-7.34	505	-0.83	501	0.00	508	0.00	508
	4.60	MAX	0.07	501	33.41	505	0.00	508	0.00	508
		MIN	-7.38	505	-0.86	501	0.00	508	0.00	508

MAX/MIN FORCE VALUES FOR MEMB 1, AMONGST ALL SECT LOCATIONS

	FY/ FZ	DIST DIST	LD LD	MZ/ MY	DIST DIST	LD LD	FX	DIST	LD
MAX.	0.23	1.53	501	33.41	4.60	505			
	0.00	0.00	501	0.00	0.00	501	6.62 C	4.60	503
MIN.	-7.38	4.60	505	-0.86	4.60	501			
	0.00	4.60	508	0.00	4.60	508	2.38 C	0.00	501

2	0.00	MAX	-0.18	501	0.00	508	0.00	508	0.00	508
		MIN	-7.35	505	0.00	508	0.00	508	0.00	508
	0.38	MAX	-0.17	501	2.82	505	0.00	508	0.00	508
		MIN	-7.34	505	0.07	501	0.00	508	0.00	508

0.77	MAX	-0.16	501	5.63	505	0.00	508	0.00	508
	MIN	-7.33	505	0.13	501	0.00	508	0.00	508
1.15	MAX	-0.15	501	8.44	505	0.00	508	0.00	508
	MIN	-7.32	505	0.19	501	0.00	508	0.00	508
1.53	MAX	-0.15	501	11.25	505	0.00	508	0.00	508
	MIN	-7.32	505	0.24	501	0.00	508	0.00	508
1.92	MAX	-0.16	501	14.06	505	0.00	508	0.00	508
	MIN	-7.33	505	0.30	501	0.00	508	0.00	508
2.30	MAX	-0.17	501	16.88	505	0.00	508	0.00	508
	MIN	-7.34	505	0.37	501	0.00	508	0.00	508
2.69	MAX	-0.18	501	19.69	505	0.00	508	0.00	508
	MIN	-7.35	505	0.43	501	0.00	508	0.00	508
3.07	MAX	-0.20	501	22.52	505	0.00	508	0.00	508
	MIN	-7.37	505	0.50	501	0.00	508	0.00	508
3.45	MAX	-0.22	501	25.35	505	0.00	508	0.00	508
	MIN	-7.39	505	0.58	501	0.00	508	0.00	508
3.84	MAX	-0.24	501	28.19	505	0.00	508	0.00	508
	MIN	-7.42	505	0.67	501	0.00	508	0.00	508
4.22	MAX	-0.28	501	31.04	505	0.00	508	0.00	508
	MIN	-7.45	505	0.77	501	0.00	508	0.00	508
4.60	MAX	-0.31	501	33.90	505	0.00	508	0.00	508
	MIN	-7.48	505	0.88	501	0.00	508	0.00	508

MAX/MIN FORCE VALUES FOR MEMB 2, AMONGST ALL SECT LOCATIONS

	FY/ FZ	DIST DIST	LD LD	MZ/ MY	DIST DIST	LD LD	FX	DIST	LD
MAX.	-0.15	1.53	501	33.90	4.60	505			
	0.00	0.00	501	0.00	0.00	501	7.02 C	4.60	508
MIN.	-7.48	4.60	505	0.00	0.00	508			
	0.00	4.60	508	0.00	4.60	508	0.09 C	0.00	501

3	0.00	MAX	5.21	503	31.77	505	0.00	508	0.00	508
		MIN	1.21	507	-1.49	501	0.00	508	0.00	508
	0.75	MAX	5.21	503	30.26	506	0.00	508	0.00	508
		MIN	-0.10	501	-1.42	501	0.00	508	0.00	508
	1.50	MAX	5.21	503	28.76	506	0.00	508	0.00	508
		MIN	-0.10	501	-1.38	502	0.00	508	0.00	508
	2.26	MAX	5.21	503	27.27	506	0.00	508	0.00	508
		MIN	-0.10	501	-3.79	502	0.00	508	0.00	508
	3.01	MAX	5.21	503	25.78	506	0.00	508	0.00	508
		MIN	-0.10	501	-5.00	502	0.00	508	0.00	508
	3.76	MAX	5.21	503	24.29	506	0.00	508	0.00	508
		MIN	-0.10	501	-6.21	502	0.00	508	0.00	508
	4.51	MAX	4.07	504	22.80	506	0.00	508	0.00	508
		MIN	-0.10	501	-7.42	502	0.00	508	0.00	508
	5.27	MAX	4.07	504	21.30	506	0.00	508	0.00	508
		MIN	-0.10	501	-8.63	502	0.00	508	0.00	508
	6.02	MAX	4.07	504	19.81	506	0.00	508	0.00	508
		MIN	-0.81	502	-10.46	503	0.00	508	0.00	508
	6.77	MAX	4.07	504	18.32	506	0.00	508	0.00	508
		MIN	-0.81	502	-12.55	503	0.00	508	0.00	508

	7.52	MAX	4.07	504	17.37	507	0.00	508	0.00	508
		MIN	-0.81	502	-14.65	503	0.00	508	0.00	508
	8.28	MAX	4.07	504	16.45	507	0.00	508	0.00	508
		MIN	-0.81	502	-16.08	503	0.00	508	0.00	508
	9.03	MAX	4.07	504	15.54	507	0.00	508	0.00	508
		MIN	-0.81	502	-16.36	503	0.00	508	0.00	508

MAX/MIN FORCE VALUES FOR MEMB 3, AMONGST ALL SECT LOCATIONS

	FY/ FZ	DIST DIST	LD LD	MZ/ MY	DIST DIST	LD LD	FX	DIST	LD
MAX.	5.21	0.00	503	31.77	0.00	505			
	0.00	0.00	501	0.00	0.00	501	8.57 C	0.00	505
MIN.	-0.81	8.28	502	-16.36	9.03	503			
	0.00	9.03	508	0.00	9.03	508	0.31 C	9.03	501

4	0.00	MAX	4.99	504	15.54	507	0.00	508	0.00	508
		MIN	-0.55	502	-16.36	503	0.00	508	0.00	508
	1.00	MAX	3.99	505	13.50	507	0.00	508	0.00	508
		MIN	-0.55	502	-17.36	503	0.00	508	0.00	508
	2.00	MAX	3.99	505	11.46	507	0.00	508	0.00	508
		MIN	-0.55	502	-18.36	503	0.00	508	0.00	508
	3.00	MAX	3.99	505	9.42	507	0.00	508	0.00	508
		MIN	-1.44	503	-18.61	504	0.00	508	0.00	508
	4.00	MAX	3.99	505	7.38	507	0.00	508	0.00	508
		MIN	-1.44	503	-21.16	504	0.00	508	0.00	508
	5.00	MAX	3.99	505	5.35	507	0.00	508	0.00	508
		MIN	-1.44	503	-21.36	504	0.00	508	0.00	508
	6.00	MAX	3.99	505	3.31	507	0.00	508	0.00	508
		MIN	-1.44	503	-21.47	504	0.00	508	0.00	508
	7.00	MAX	2.99	506	1.97	508	0.00	508	0.00	508
		MIN	-1.44	503	-21.57	504	0.00	508	0.00	508
	8.00	MAX	2.99	506	1.02	508	0.00	508	0.00	508
		MIN	-1.44	503	-21.96	505	0.00	508	0.00	508
	9.00	MAX	2.99	506	0.07	508	0.00	508	0.00	508
		MIN	-2.33	504	-23.50	505	0.00	508	0.00	508
	10.00	MAX	2.99	506	-0.07	501	0.00	508	0.00	508
		MIN	-2.33	504	-25.05	505	0.00	508	0.00	508
	11.00	MAX	2.99	506	-0.02	501	0.00	508	0.00	508
		MIN	-2.33	504	-24.25	505	0.00	508	0.00	508
	12.00	MAX	2.99	506	0.04	501	0.00	508	0.00	508
		MIN	-2.33	504	-23.36	505	0.00	508	0.00	508

MAX/MIN FORCE VALUES FOR MEMB 4, AMONGST ALL SECT LOCATIONS

FY/ FZ	DIST DIST	LD LD	MZ/ MY	DIST DIST	LD LD	FX	DIST	LD

MAX.	4.99	0.00	504	15.54	0.00	507				
	0.00	0.00	501	0.00	0.00	501	8.13 C	0.00	505	
MIN.	-2.33	12.00	504	-25.05	10.00	505				
	0.00	12.00	508	0.00	12.00	508	0.32 C	12.00	501	

5	0.00	MAX	4.33	506	15.56	504	0.00	508	0.00	508
		MIN	-0.95	508	-14.25	508	0.00	508	0.00	508
	1.00	MAX	4.33	506	13.22	504	0.00	508	0.00	508
		MIN	-0.95	508	-16.91	507	0.00	508	0.00	508
	2.00	MAX	4.33	506	10.89	504	0.00	508	0.00	508
		MIN	-0.95	508	-19.65	507	0.00	508	0.00	508
	3.00	MAX	4.33	506	8.89	503	0.00	508	0.00	508
		MIN	-0.95	508	-20.05	507	0.00	508	0.00	508
	4.00	MAX	3.33	505	7.45	503	0.00	508	0.00	508
		MIN	-0.95	508	-20.45	507	0.00	508	0.00	508
	5.00	MAX	3.33	505	6.01	503	0.00	508	0.00	508
		MIN	-0.95	508	-20.86	507	0.00	508	0.00	508
	6.00	MAX	3.33	505	4.57	503	0.00	508	0.00	508
		MIN	-2.04	507	-21.16	507	0.00	508	0.00	508
	7.00	MAX	3.33	505	3.13	503	0.00	508	0.00	508
		MIN	-2.04	507	-22.49	506	0.00	508	0.00	508
	8.00	MAX	3.33	505	1.69	503	0.00	508	0.00	508
		MIN	-2.04	507	-24.28	506	0.00	508	0.00	508
	9.00	MAX	3.33	505	0.94	502	0.00	508	0.00	508
		MIN	-2.04	507	-23.74	506	0.00	508	0.00	508
	10.00	MAX	2.33	504	0.39	502	0.00	508	0.00	508
		MIN	-2.04	507	-23.19	506	0.00	508	0.00	508
	11.00	MAX	2.33	504	0.10	501	0.00	508	0.00	508
		MIN	-2.04	507	-22.64	506	0.00	508	0.00	508
	12.00	MAX	2.33	504	0.04	501	0.00	508	0.00	508
		MIN	-2.99	506	-23.36	505	0.00	508	0.00	508

MAX/MIN FORCE VALUES FOR MEMB 5, AMONGST ALL SECT LOCATIONS

	FY/ FZ	DIST DIST	LD LD	MZ/ MY	DIST DIST	LD LD	FX	DIST	LD
MAX.	4.33	0.00	506	15.56	0.00	504			
	0.00	0.00	501	0.00	0.00	501	8.13 C	0.00	505
MIN.	-2.99	12.00	506	-24.28	8.00	506			
	0.00	12.00	508	0.00	12.00	508	0.32 C	12.00	501

6	0.00	MAX	5.69	508	32.42	505	0.00	508	0.00	508
		MIN	0.02	501	0.84	501	0.00	508	0.00	508
	0.75	MAX	5.69	508	30.69	505	0.00	508	0.00	508
		MIN	0.02	501	0.83	501	0.00	508	0.00	508
	1.50	MAX	5.69	508	28.96	505	0.00	508	0.00	508
		MIN	0.02	501	0.82	501	0.00	508	0.00	508
	2.26	MAX	4.43	507	27.23	505	0.00	508	0.00	508
		MIN	0.02	501	0.81	501	0.00	508	0.00	508
	3.01	MAX	4.43	507	25.50	505	0.00	508	0.00	508

	MIN	0.02	501	0.02	508	0.00	508	0.00	508
3.76	MAX	4.43	507	23.77	505	0.00	508	0.00	508
	MIN	0.02	501	-2.43	508	0.00	508	0.00	508
4.51	MAX	4.43	507	22.06	504	0.00	508	0.00	508
	MIN	0.02	501	-4.89	508	0.00	508	0.00	508
5.27	MAX	4.43	507	20.98	504	0.00	508	0.00	508
	MIN	0.02	501	-7.34	508	0.00	508	0.00	508
6.02	MAX	4.43	507	19.89	504	0.00	508	0.00	508
	MIN	0.02	501	-9.56	508	0.00	508	0.00	508
6.77	MAX	4.43	507	18.81	504	0.00	508	0.00	508
	MIN	0.02	501	-10.19	508	0.00	508	0.00	508
7.52	MAX	4.43	507	17.72	504	0.00	508	0.00	508
	MIN	0.02	501	-10.83	508	0.00	508	0.00	508
8.28	MAX	3.32	506	16.64	504	0.00	508	0.00	508
	MIN	0.02	501	-12.55	507	0.00	508	0.00	508
9.03	MAX	3.32	506	15.56	504	0.00	508	0.00	508
	MIN	-1.58	508	-14.25	508	0.00	508	0.00	508

MAX/MIN FORCE VALUES FOR MEMB 6, AMONGST ALL SECT LOCATIONS

	FY/ FZ	DIST DIST	LD LD	MZ/ MY	DIST DIST	LD LD	FX	DIST	LD
MAX.	5.69	0.00	508	32.42	0.00	505			
	0.00	0.00	501	0.00	0.00	501	8.48 C	0.00	505
MIN.	-1.58	9.03	508	-14.25	9.03	508			
	0.00	9.03	508	0.00	9.03	508	0.33 C	9.03	501

********** END OF FORCE ENVELOPE FROM INTERNAL STORAGE **********

273. LOAD LIST 601 TO 609
274. PRINT FORCE ENVELOPE NSECTION 4 LIST 1 TO 6

MEMBER FORCE ENVELOPE

ALL UNITS ARE KIP FEET

MEMB	DISTANCE		FY	LD	MZ	LD	FZ	LD	MY	LD
1	0.00	MAX	0.23	601	0.00	609	0.00	609	0.00	609
		MIN	-6.76	608	0.00	609	0.00	609	0.00	609
	0.38	MAX	0.25	601	2.59	608	0.00	609	0.00	609
		MIN	-6.75	608	-0.09	601	0.00	609	0.00	609
	0.77	MAX	0.26	601	5.18	608	0.00	609	0.00	609
		MIN	-6.74	608	-0.19	601	0.00	609	0.00	609
	1.15	MAX	0.26	601	7.76	608	0.00	609	0.00	609
		MIN	-6.74	608	-0.29	601	0.00	609	0.00	609
	1.53	MAX	0.26	601	10.35	608	0.00	609	0.00	609
		MIN	-6.74	608	-0.39	601	0.00	609	0.00	609
	1.92	MAX	0.26	601	12.93	608	0.00	609	0.00	609
		MIN	-6.74	608	-0.49	601	0.00	609	0.00	609
	2.30	MAX	0.25	601	15.52	608	0.00	609	0.00	609
		MIN	-6.75	608	-0.59	601	0.00	609	0.00	609
	2.69	MAX	0.23	601	18.11	608	0.00	609	0.00	609
		MIN	-6.76	608	-0.68	601	0.00	609	0.00	609
	3.07	MAX	0.22	601	20.71	608	0.00	609	0.00	609
		MIN	-6.78	608	-0.76	601	0.00	609	0.00	609
	3.45	MAX	0.20	601	23.32	608	0.00	609	0.00	609
		MIN	-6.80	608	-0.84	601	0.00	609	0.00	609
	3.84	MAX	0.17	601	25.93	608	0.00	609	0.00	609
		MIN	-6.83	608	-0.91	601	0.00	609	0.00	609
	4.22	MAX	0.14	601	28.56	608	0.00	609	0.00	609
		MIN	-6.86	608	-0.97	601	0.00	609	0.00	609
	4.60	MAX	0.10	601	31.19	608	0.00	609	0.00	609
		MIN	-6.89	608	-1.02	601	0.00	609	0.00	609

MAX/MIN FORCE VALUES FOR MEMB 1, AMONGST ALL SECT LOCATIONS

	FY/ FZ	DIST DIST	LD LD	MZ/ MY	DIST DIST	LD LD	FX	DIST	LD
MAX.	0.26	1.53	601	31.19	4.60	608			
	0.00	0.00	601	0.00	0.00	601	5.88 C	4.60	606
MIN.	-6.89	4.60	608	-1.02	4.60	601			
	0.00	4.60	609	0.00	4.60	609	2.86 C	0.00	601

2	0.00	MAX	-0.22	601	0.00	609	0.00	609	0.00	609
		MIN	-6.72	608	0.00	609	0.00	609	0.00	609
	0.38	MAX	-0.21	601	2.57	608	0.00	609	0.00	609
		MIN	-6.70	608	0.08	601	0.00	609	0.00	609

	0.77	MAX	-0.20	601	5.15	608	0.00	609	0.00	609
		MIN	-6.69	608	0.16	601	0.00	609	0.00	609
	1.15	MAX	-0.19	601	7.71	608	0.00	609	0.00	609
		MIN	-6.69	608	0.23	601	0.00	609	0.00	609
	1.53	MAX	-0.19	601	10.28	608	0.00	609	0.00	609
		MIN	-6.69	608	0.31	601	0.00	609	0.00	609
	1.92	MAX	-0.20	601	12.85	608	0.00	609	0.00	609
		MIN	-6.69	608	0.38	601	0.00	609	0.00	609
	2.30	MAX	-0.21	601	15.42	608	0.00	609	0.00	609
		MIN	-6.70	608	0.46	601	0.00	609	0.00	609
	2.69	MAX	-0.22	601	17.99	608	0.00	609	0.00	609
		MIN	-6.72	608	0.54	601	0.00	609	0.00	609
	3.07	MAX	-0.24	601	20.57	608	0.00	609	0.00	609
		MIN	-6.73	608	0.63	601	0.00	609	0.00	609
	3.45	MAX	-0.26	601	23.16	608	0.00	609	0.00	609
		MIN	-6.76	608	0.73	601	0.00	609	0.00	609
	3.84	MAX	-0.29	601	25.76	608	0.00	609	0.00	609
		MIN	-6.78	608	0.83	601	0.00	609	0.00	609
	4.22	MAX	-0.32	601	28.37	608	0.00	609	0.00	609
		MIN	-6.81	608	0.95	601	0.00	609	0.00	609
	4.60	MAX	-0.35	601	30.99	608	0.00	609	0.00	609
		MIN	-6.85	608	1.08	601	0.00	609	0.00	609

MAX/MIN FORCE VALUES FOR MEMB 2, AMONGST ALL SECT LOCATIONS

	FY/ FZ	DIST DIST	LD LD	MZ/ MY	DIST DIST	LD LD	FX	DIST	LD
MAX.	-0.19	1.53	601	30.99	4.60	608			
	0.00	0.00	601	0.00	0.00	601	5.53 C	4.60	609
MIN.	-6.85	4.60	608	0.00	0.00	609			
	0.00	4.60	609	0.00	4.60	609	0.10 C	0.00	601

3	0.00	MAX	5.21	602	29.71	608	0.00	609	0.00	609
		MIN	1.98	609	-1.76	601	0.00	609	0.00	609
	0.75	MAX	4.46	603	27.79	608	0.00	609	0.00	609
		MIN	-0.11	601	-1.68	601	0.00	609	0.00	609
	1.50	MAX	4.46	603	25.87	608	0.00	609	0.00	609
		MIN	-0.11	601	-2.31	602	0.00	609	0.00	609
	2.26	MAX	4.46	603	23.94	608	0.00	609	0.00	609
		MIN	-0.11	601	-4.04	602	0.00	609	0.00	609
	3.01	MAX	4.46	603	22.28	609	0.00	609	0.00	609
		MIN	-0.11	601	-5.78	602	0.00	609	0.00	609
	3.76	MAX	4.46	603	20.79	609	0.00	609	0.00	609
		MIN	-0.11	601	-7.52	602	0.00	609	0.00	609
	4.51	MAX	3.83	604	19.30	609	0.00	609	0.00	609
		MIN	-0.59	602	-8.86	603	0.00	609	0.00	609
	5.27	MAX	3.83	604	17.81	609	0.00	609	0.00	609
		MIN	-0.59	602	-10.04	603	0.00	609	0.00	609
	6.02	MAX	3.83	604	16.31	609	0.00	609	0.00	609
		MIN	-0.59	602	-11.21	603	0.00	609	0.00	609
	6.77	MAX	3.83	604	14.82	609	0.00	609	0.00	609
		MIN	-0.59	602	-12.38	603	0.00	609	0.00	609

7.52	MAX	3.83	604	13.33	609	0.00	609	0.00	609
	MIN	-0.59	602	-13.56	603	0.00	609	0.00	609
8.28	MAX	3.24	605	11.84	609	0.00	609	0.00	609
	MIN	-1.34	603	-14.60	604	0.00	609	0.00	609
9.03	MAX	3.24	605	10.35	609	0.00	609	0.00	609
	MIN	-1.34	603	-15.30	604	0.00	609	0.00	609

MAX/MIN FORCE VALUES FOR MEMB 3, AMONGST ALL SECT LOCATIONS

	FY/ FZ	DIST DIST	LD LD	MZ/ MY	DIST DIST	LD LD	FX	DIST	LD
MAX.	5.21	0.00	602	29.71	0.00	608			
	0.00	0.00	601	0.00	0.00	601	7.95 C	0.00	608
MIN.	-1.34	8.28	603	-15.30	9.03	604			
	0.00	9.03	609	0.00	9.03	609	0.36 C	9.03	601

4	0.00	MAX	3.99	605	10.35	609	0.00	609	0.00	609
		MIN	-0.93	603	-15.30	604	0.00	609	0.00	609
	1.00	MAX	3.99	605	7.46	609	0.00	609	0.00	609
		MIN	-0.93	603	-16.83	604	0.00	609	0.00	609
	2.00	MAX	3.99	605	4.58	609	0.00	609	0.00	609
		MIN	-0.93	603	-18.36	604	0.00	609	0.00	609
	3.00	MAX	3.39	606	1.69	609	0.00	609	0.00	609
		MIN	-1.39	604	-17.30	605	0.00	609	0.00	609
	4.00	MAX	3.39	606	0.21	609	0.00	609	0.00	609
		MIN	-1.39	604	-18.36	605	0.00	609	0.00	609
	5.00	MAX	3.39	606	-0.42	601	0.00	609	0.00	609
		MIN	-1.39	604	-19.42	605	0.00	609	0.00	609
	6.00	MAX	3.39	606	-0.36	601	0.00	609	0.00	609
		MIN	-1.39	604	-20.48	605	0.00	609	0.00	609
	7.00	MAX	2.72	607	-0.29	601	0.00	609	0.00	609
		MIN	-1.87	605	-20.66	606	0.00	609	0.00	609
	8.00	MAX	2.72	607	-0.22	601	0.00	609	0.00	609
		MIN	-1.87	605	-21.12	606	0.00	609	0.00	609
	9.00	MAX	2.72	607	-0.16	601	0.00	609	0.00	609
		MIN	-1.87	605	-21.58	606	0.00	609	0.00	609
	10.00	MAX	2.72	607	-0.09	601	0.00	609	0.00	609
		MIN	-1.87	605	-22.24	607	0.00	609	0.00	609
	11.00	MAX	2.06	608	-0.02	601	0.00	609	0.00	609
		MIN	-2.46	606	-22.16	607	0.00	609	0.00	609
	12.00	MAX	2.06	608	0.04	601	0.00	609	0.00	609
		MIN	-2.46	606	-21.95	607	0.00	609	0.00	609

MAX/MIN FORCE VALUES FOR MEMB 4, AMONGST ALL SECT LOCATIONS

FY/ FZ	DIST DIST	LD LD	MZ/ MY	DIST DIST	LD LD	FX	DIST	LD

MAX.	3.99	0.00	605	10.35	0.00	609				
	0.00	0.00	601	0.00	0.00	601	7.57 C	0.00	608	
MIN.	-2.46	11.00	606	-22.24	10.00	607				
	0.00	12.00	609	0.00	12.00	609	0.37 C	12.00	601	

5	0.00	MAX	4.43	609	12.98	605	0.00	609	0.00	609
		MIN	0.07	601	-5.05	609	0.00	609	0.00	609
	1.00	MAX	4.43	609	11.12	605	0.00	609	0.00	609
		MIN	0.07	601	-9.48	609	0.00	609	0.00	609
	2.00	MAX	3.80	608	9.42	604	0.00	609	0.00	609
		MIN	0.07	601	-13.79	609	0.00	609	0.00	609
	3.00	MAX	3.80	608	8.02	604	0.00	609	0.00	609
		MIN	0.07	601	-15.29	609	0.00	609	0.00	609
	4.00	MAX	3.80	608	6.63	604	0.00	609	0.00	609
		MIN	0.07	601	-16.80	609	0.00	609	0.00	609
	5.00	MAX	3.80	608	5.23	604	0.00	609	0.00	609
		MIN	0.07	601	-18.30	609	0.00	609	0.00	609
	6.00	MAX	3.13	607	3.84	604	0.00	609	0.00	609
		MIN	-1.42	609	-19.69	609	0.00	609	0.00	609
	7.00	MAX	3.13	607	2.83	603	0.00	609	0.00	609
		MIN	-1.42	609	-19.62	608	0.00	609	0.00	609
	8.00	MAX	3.13	607	1.91	603	0.00	609	0.00	609
		MIN	-1.42	609	-20.49	608	0.00	609	0.00	609
	9.00	MAX	3.13	607	0.98	603	0.00	609	0.00	609
		MIN	-1.42	609	-21.35	608	0.00	609	0.00	609
	10.00	MAX	2.46	606	0.49	602	0.00	609	0.00	609
		MIN	-2.06	608	-22.11	608	0.00	609	0.00	609
	11.00	MAX	2.46	606	0.11	601	0.00	609	0.00	609
		MIN	-2.06	608	-21.75	607	0.00	609	0.00	609
	12.00	MAX	2.46	606	0.04	601	0.00	609	0.00	609
		MIN	-2.06	608	-21.95	607	0.00	609	0.00	609

MAX/MIN FORCE VALUES FOR MEMB 5, AMONGST ALL SECT LOCATIONS

	FY/ FZ	DIST DIST	LD LD	MZ/ MY	DIST DIST	LD LD	FX	DIST	LD
MAX.	4.43	0.00	609	12.98	0.00	605			
	0.00	0.00	601	0.00	0.00	601	7.57 C	0.00	608
MIN.	-2.06	11.00	608	-22.11	10.00	608			
	0.00	12.00	609	0.00	12.00	609	0.37 C	12.00	601

6	0.00	MAX	3.52	609	29.43	608	0.00	609	0.00	609
		MIN	0.02	601	1.03	601	0.00	609	0.00	609
	0.75	MAX	3.52	609	27.74	607	0.00	609	0.00	609
		MIN	0.02	601	1.01	601	0.00	609	0.00	609
	1.50	MAX	3.52	609	26.09	607	0.00	609	0.00	609
		MIN	0.02	601	1.00	601	0.00	609	0.00	609
	2.26	MAX	3.52	609	24.45	607	0.00	609	0.00	609
		MIN	0.02	601	0.98	601	0.00	609	0.00	609
	3.01	MAX	3.52	609	22.80	607	0.00	609	0.00	609

	MIN	0.02	601	0.97	601	0.00	609	0.00	609
3.76	MAX	3.52	609	21.16	607	0.00	609	0.00	609
	MIN	0.02	601	0.95	601	0.00	609	0.00	609
4.51	MAX	3.52	609	19.63	606	0.00	609	0.00	609
	MIN	0.02	601	0.94	601	0.00	609	0.00	609
5.27	MAX	3.52	609	18.42	606	0.00	609	0.00	609
	MIN	0.02	601	0.92	601	0.00	609	0.00	609
6.02	MAX	3.52	609	17.21	606	0.00	609	0.00	609
	MIN	0.02	601	0.91	601	0.00	609	0.00	609
6.77	MAX	3.52	609	15.99	606	0.00	609	0.00	609
	MIN	0.02	601	0.89	601	0.00	609	0.00	609
7.52	MAX	3.52	609	14.78	606	0.00	609	0.00	609
	MIN	0.02	601	0.25	609	0.00	609	0.00	609
8.28	MAX	3.52	609	13.84	605	0.00	609	0.00	609
	MIN	0.02	601	-2.40	609	0.00	609	0.00	609
9.03	MAX	3.52	609	12.98	605	0.00	609	0.00	609
	MIN	0.02	601	-5.05	609	0.00	609	0.00	609

MAX/MIN FORCE VALUES FOR MEMB 6, AMONGST ALL SECT LOCATIONS

	FY/ FZ	DIST DIST	LD LD	MZ/ MY	DIST DIST	LD LD	FX	DIST	LD
MAX.	3.52	0.00	609	29.43	0.00	608			
	0.00	0.00	601	0.00	0.00	601	7.98 C	0.00	608
MIN.	0.02	9.03	601	-5.05	9.03	609			
	0.00	9.03	609	0.00	9.03	609	0.37 C	9.03	601

********** END OF FORCE ENVELOPE FROM INTERNAL STORAGE **********

275. LOAD LIST 701 TO 708
276. PRINT FORCE ENVELOPE NSECTION 4 LIST 1 TO 6

MEMBER FORCE ENVELOPE

ALL UNITS ARE KIP FEET

MEMB	DISTANCE		FY	LD	MZ	LD	FZ	LD	MY	LD
1	0.00	MAX	0.19	701	0.00	708	0.00	708	0.00	708
		MIN	-7.55	707	0.00	708	0.00	708	0.00	708
	0.38	MAX	0.21	701	2.90	707	0.00	708	0.00	708
		MIN	-7.54	707	-0.08	701	0.00	708	0.00	708
	0.77	MAX	0.21	701	5.79	707	0.00	708	0.00	708
		MIN	-7.53	707	-0.16	701	0.00	708	0.00	708
	1.15	MAX	0.22	701	8.68	707	0.00	708	0.00	708
		MIN	-7.53	707	-0.24	701	0.00	708	0.00	708
	1.53	MAX	0.22	701	11.56	707	0.00	708	0.00	708
		MIN	-7.53	707	-0.32	701	0.00	708	0.00	708
	1.92	MAX	0.21	701	14.45	707	0.00	708	0.00	708
		MIN	-7.53	707	-0.41	701	0.00	708	0.00	708
	2.30	MAX	0.21	701	17.34	707	0.00	708	0.00	708
		MIN	-7.54	707	-0.49	701	0.00	708	0.00	708
	2.69	MAX	0.19	701	20.24	707	0.00	708	0.00	708
		MIN	-7.55	707	-0.56	701	0.00	708	0.00	708
	3.07	MAX	0.17	701	23.14	707	0.00	708	0.00	708
		MIN	-7.57	707	-0.64	701	0.00	708	0.00	708
	3.45	MAX	0.15	701	26.05	707	0.00	708	0.00	708
		MIN	-7.59	707	-0.70	701	0.00	708	0.00	708
	3.84	MAX	0.13	701	28.97	707	0.00	708	0.00	708
		MIN	-7.62	707	-0.75	701	0.00	708	0.00	708
	4.22	MAX	0.10	701	31.90	707	0.00	708	0.00	708
		MIN	-7.65	707	-0.79	701	0.00	708	0.00	708
	4.60	MAX	0.06	701	34.84	707	0.00	708	0.00	708
		MIN	-7.68	707	-0.83	701	0.00	708	0.00	708

MAX/MIN FORCE VALUES FOR MEMB 1, AMONGST ALL SECT LOCATIONS

	FY/ FZ	DIST DIST	LD LD	MZ/ MY	DIST DIST	LD LD	FX	DIST	LD
MAX.	0.22	1.53	701	34.84	4.60	707			
	0.00	0.00	701	0.00	0.00	701	6.45 C	4.60	703
MIN.	-7.68	4.60	707	-0.83	4.60	701			
	0.00	4.60	708	0.00	4.60	708	2.26 C	0.00	701

2	0.00	MAX	-0.17	701	0.00	708	0.00	708	0.00	708
		MIN	-7.50	707	0.00	708	0.00	708	0.00	708
	0.38	MAX	-0.15	701	2.87	707	0.00	708	0.00	708
		MIN	-7.48	707	0.06	701	0.00	708	0.00	708

	0.77	MAX	-0.15	701	5.74	707	0.00	708	0.00	708
		MIN	-7.47	707	0.12	701	0.00	708	0.00	708
	1.15	MAX	-0.14	701	8.61	707	0.00	708	0.00	708
		MIN	-7.47	707	0.17	701	0.00	708	0.00	708
	1.53	MAX	-0.14	701	11.48	707	0.00	708	0.00	708
		MIN	-7.47	707	0.23	701	0.00	708	0.00	708
	1.92	MAX	-0.15	701	14.34	707	0.00	708	0.00	708
		MIN	-7.47	707	0.28	701	0.00	708	0.00	708
	2.30	MAX	-0.15	701	17.21	707	0.00	708	0.00	708
		MIN	-7.48	707	0.34	701	0.00	708	0.00	708
	2.69	MAX	-0.17	701	20.09	707	0.00	708	0.00	708
		MIN	-7.50	707	0.40	701	0.00	708	0.00	708
	3.07	MAX	-0.19	701	22.97	707	0.00	708	0.00	708
		MIN	-7.51	707	0.47	701	0.00	708	0.00	708
	3.45	MAX	-0.21	701	25.85	707	0.00	708	0.00	708
		MIN	-7.54	707	0.55	701	0.00	708	0.00	708
	3.84	MAX	-0.23	701	28.75	707	0.00	708	0.00	708
		MIN	-7.56	707	0.63	701	0.00	708	0.00	708
	4.22	MAX	-0.26	701	31.66	707	0.00	708	0.00	708
		MIN	-7.59	707	0.73	701	0.00	708	0.00	708
	4.60	MAX	-0.30	701	34.58	707	0.00	708	0.00	708
		MIN	-7.63	707	0.83	701	0.00	708	0.00	708

MAX/MIN FORCE VALUES FOR MEMB 2, AMONGST ALL SECT LOCATIONS

	FY/ FZ	DIST DIST	LD LD	MZ/ MY	DIST DIST	LD LD	FX	DIST	LD
MAX.	-0.14	1.53	701	34.58	4.60	707			
	0.00	0.00	701	0.00	0.00	701	6.46 C	4.60	708
MIN.	-7.63	4.60	707	0.00	0.00	708			
	0.00	4.60	708	0.00	4.60	708	0.08 C	0.00	701

3	0.00	MAX	5.38	703	33.15	707	0.00	708	0.00	708
		MIN	2.16	708	-1.42	701	0.00	708	0.00	708
	0.75	MAX	5.38	703	30.93	707	0.00	708	0.00	708
		MIN	-0.09	701	-1.35	701	0.00	708	0.00	708
	1.50	MAX	5.38	703	28.71	707	0.00	708	0.00	708
		MIN	-0.09	701	-2.12	702	0.00	708	0.00	708
	2.26	MAX	4.39	704	26.48	707	0.00	708	0.00	708
		MIN	-0.09	701	-3.38	702	0.00	708	0.00	708
	3.01	MAX	4.39	704	24.64	708	0.00	708	0.00	708
		MIN	-0.09	701	-4.64	702	0.00	708	0.00	708
	3.76	MAX	4.39	704	23.01	708	0.00	708	0.00	708
		MIN	-0.09	701	-5.90	702	0.00	708	0.00	708
	4.51	MAX	4.39	704	21.38	708	0.00	708	0.00	708
		MIN	-0.09	701	-7.81	703	0.00	708	0.00	708
	5.27	MAX	4.39	704	19.75	708	0.00	708	0.00	708
		MIN	-0.62	702	-10.13	703	0.00	708	0.00	708
	6.02	MAX	4.39	704	18.12	708	0.00	708	0.00	708
		MIN	-0.62	702	-12.40	703	0.00	708	0.00	708
	6.77	MAX	4.39	704	16.50	708	0.00	708	0.00	708
		MIN	-0.62	702	-12.99	703	0.00	708	0.00	708

7.52	MAX	3.49	705	14.87	708	0.00	708	0.00	708
	MIN	-0.62	702	-13.57	703	0.00	708	0.00	708
8.28	MAX	3.49	705	13.24	708	0.00	708	0.00	708
	MIN	-0.62	702	-14.16	703	0.00	708	0.00	708
9.03	MAX	3.49	705	11.61	708	0.00	708	0.00	708
	MIN	-0.62	702	-14.75	703	0.00	708	0.00	708

MAX/MIN FORCE VALUES FOR MEMB 3, AMONGST ALL SECT LOCATIONS

	FY/ FZ	DIST DIST	LD LD	MZ/ MY	DIST DIST	LD LD	FX	DIST	LD
MAX.	5.38	0.00	703	33.15	0.00	707			
	0.00	0.00	701	0.00	0.00	701	8.89 C	0.00	707
MIN.	-0.62	8.28	702	-14.75	9.03	703			
	0.00	9.03	708	0.00	9.03	708	0.30 C	9.03	701

4	0.00	MAX	4.42	705	11.61	708	0.00	708	0.00	708
		MIN	-0.42	702	-14.75	703	0.00	708	0.00	708
	1.00	MAX	4.42	705	8.45	708	0.00	708	0.00	708
		MIN	-1.05	703	-17.33	704	0.00	708	0.00	708
	2.00	MAX	4.42	705	5.30	708	0.00	708	0.00	708
		MIN	-1.05	703	-17.95	704	0.00	708	0.00	708
	3.00	MAX	3.53	706	3.54	708	0.00	708	0.00	708
		MIN	-1.05	703	-18.48	704	0.00	708	0.00	708
	4.00	MAX	3.53	706	1.85	708	0.00	708	0.00	708
		MIN	-1.05	703	-19.00	704	0.00	708	0.00	708
	5.00	MAX	3.53	706	0.16	708	0.00	708	0.00	708
		MIN	-1.05	703	-19.71	705	0.00	708	0.00	708
	6.00	MAX	3.53	706	-0.28	701	0.00	708	0.00	708
		MIN	-1.79	704	-21.81	705	0.00	708	0.00	708
	7.00	MAX	3.53	706	-0.23	701	0.00	708	0.00	708
		MIN	-1.79	704	-21.69	705	0.00	708	0.00	708
	8.00	MAX	2.57	707	-0.17	701	0.00	708	0.00	708
		MIN	-1.79	704	-21.48	705	0.00	708	0.00	708
	9.00	MAX	2.57	707	-0.12	701	0.00	708	0.00	708
		MIN	-1.79	704	-21.69	706	0.00	708	0.00	708
	10.00	MAX	2.57	707	-0.07	701	0.00	708	0.00	708
		MIN	-1.79	704	-22.90	706	0.00	708	0.00	708
	11.00	MAX	2.57	707	-0.01	701	0.00	708	0.00	708
		MIN	-2.53	705	-24.12	706	0.00	708	0.00	708
	12.00	MAX	2.57	707	0.04	701	0.00	708	0.00	708
		MIN	-2.53	705	-23.10	706	0.00	708	0.00	708

MAX/MIN FORCE VALUES FOR MEMB 4, AMONGST ALL SECT LOCATIONS

FY/ FZ	DIST DIST	LD LD	MZ/ MY	DIST DIST	LD LD	FX	DIST	LD

MAX.		4.42	0.00	705	11.61	0.00	708			
		0.00	0.00	701	0.00	0.00	701	8.45 C	0.00	707
MIN.		-2.53	12.00	705	-24.12	11.00	706			
		0.00	12.00	708	0.00	12.00	708	0.31 C	12.00	701

5	0.00	MAX	4.38	707	14.40	704	0.00	708	0.00	708
		MIN	0.05	701	-9.05	708	0.00	708	0.00	708
	1.00	MAX	4.38	707	12.61	704	0.00	708	0.00	708
		MIN	0.05	701	-11.99	708	0.00	708	0.00	708
	2.00	MAX	4.38	707	10.82	704	0.00	708	0.00	708
		MIN	0.05	701	-14.93	708	0.00	708	0.00	708
	3.00	MAX	4.38	707	9.03	704	0.00	708	0.00	708
		MIN	0.05	701	-17.78	708	0.00	708	0.00	708
	4.00	MAX	3.42	706	7.24	704	0.00	708	0.00	708
		MIN	0.05	701	-18.40	708	0.00	708	0.00	708
	5.00	MAX	3.42	706	5.45	704	0.00	708	0.00	708
		MIN	0.05	701	-19.02	708	0.00	708	0.00	708
	6.00	MAX	3.42	706	4.09	703	0.00	708	0.00	708
		MIN	0.05	701	-19.64	708	0.00	708	0.00	708
	7.00	MAX	3.42	706	3.04	703	0.00	708	0.00	708
		MIN	-1.69	708	-20.58	707	0.00	708	0.00	708
	8.00	MAX	3.42	706	1.99	703	0.00	708	0.00	708
		MIN	-1.69	708	-22.55	707	0.00	708	0.00	708
	9.00	MAX	2.53	705	0.94	703	0.00	708	0.00	708
		MIN	-1.69	708	-22.29	707	0.00	708	0.00	708
	10.00	MAX	2.53	705	0.41	702	0.00	708	0.00	708
		MIN	-1.69	708	-22.04	707	0.00	708	0.00	708
	11.00	MAX	2.53	705	0.09	701	0.00	708	0.00	708
		MIN	-1.69	708	-22.00	706	0.00	708	0.00	708
	12.00	MAX	2.53	705	0.04	701	0.00	708	0.00	708
		MIN	-2.57	707	-23.10	706	0.00	708	0.00	708

MAX/MIN FORCE VALUES FOR MEMB 5, AMONGST ALL SECT LOCATIONS

	FY/ FZ	DIST DIST	LD LD	MZ/ MY	DIST DIST	LD LD	FX	DIST	LD
MAX.	4.38	0.00	707	14.40	0.00	704			
	0.00	0.00	701	0.00	0.00	701	8.45 C	0.00	707
MIN.	-2.57	12.00	707	-23.10	12.00	706			
	0.00	12.00	708	0.00	12.00	708	0.31 C	12.00	701

6	0.00	MAX	4.25	708	32.81	707	0.00	708	0.00	708
		MIN	0.01	701	0.80	701	0.00	708	0.00	708
	0.75	MAX	4.25	708	30.66	706	0.00	708	0.00	708
		MIN	0.01	701	0.79	701	0.00	708	0.00	708
	1.50	MAX	4.25	708	28.87	706	0.00	708	0.00	708
		MIN	0.01	701	0.77	701	0.00	708	0.00	708
	2.26	MAX	4.25	708	27.08	706	0.00	708	0.00	708
		MIN	0.01	701	0.76	701	0.00	708	0.00	708
	3.01	MAX	4.25	708	25.28	706	0.00	708	0.00	708

	MIN	0.01	701	0.75	701	0.00	708	0.00	708
3.76	MAX	4.25	708	23.49	706	0.00	708	0.00	708
	MIN	0.01	701	0.74	701	0.00	708	0.00	708
4.51	MAX	4.25	708	21.69	706	0.00	708	0.00	708
	MIN	0.01	701	0.73	701	0.00	708	0.00	708
5.27	MAX	4.25	708	20.42	705	0.00	708	0.00	708
	MIN	0.01	701	0.72	701	0.00	708	0.00	708
6.02	MAX	4.25	708	19.20	705	0.00	708	0.00	708
	MIN	0.01	701	0.71	701	0.00	708	0.00	708
6.77	MAX	4.25	708	17.98	705	0.00	708	0.00	708
	MIN	0.01	701	0.29	708	0.00	708	0.00	708
7.52	MAX	4.25	708	16.76	705	0.00	708	0.00	708
	MIN	0.01	701	-2.91	708	0.00	708	0.00	708
8.28	MAX	4.25	708	15.53	705	0.00	708	0.00	708
	MIN	0.01	701	-6.11	708	0.00	708	0.00	708
9.03	MAX	3.30	707	14.40	704	0.00	708	0.00	708
	MIN	0.01	701	-9.05	708	0.00	708	0.00	708

MAX/MIN FORCE VALUES FOR MEMB 6, AMONGST ALL SECT LOCATIONS

	FY/ FZ	DIST DIST	LD LD	MZ/ MY	DIST DIST	LD LD	FX	DIST	LD
MAX.	4.25	0.00	708	32.81	0.00	707			
	0.00	0.00	701	0.00	0.00	701	8.93 C	0.00	707
MIN.	0.01	9.03	701	-9.05	9.03	708			
	0.00	9.03	708	0.00	9.03	708	0.32 C	9.03	701

********** END OF FORCE ENVELOPE FROM INTERNAL STORAGE **********

277. LOAD LIST 801 TO 808
278. PRINT FORCE ENVELOPE NSECTION 4 LIST 1 TO 6

MEMBER FORCE ENVELOPE

ALL UNITS ARE KIP FEET

MEMB	DISTANCE		FY	LD	MZ	LD	FZ	LD	MY	LD
1	0.00	MAX	0.15	801	0.00	808	0.00	808	0.00	808
		MIN	-5.46	807	0.00	808	0.00	808	0.00	808
	0.38	MAX	0.16	801	2.09	807	0.00	808	0.00	808
		MIN	-5.45	807	-0.06	801	0.00	808	0.00	808
	0.77	MAX	0.17	801	4.18	807	0.00	808	0.00	808
		MIN	-5.44	807	-0.13	801	0.00	808	0.00	808
	1.15	MAX	0.18	801	6.27	807	0.00	808	0.00	808
		MIN	-5.44	807	-0.19	801	0.00	808	0.00	808
	1.53	MAX	0.18	801	8.36	807	0.00	808	0.00	808
		MIN	-5.44	807	-0.26	801	0.00	808	0.00	808
	1.92	MAX	0.17	801	10.44	807	0.00	808	0.00	808
		MIN	-5.44	807	-0.33	801	0.00	808	0.00	808
	2.30	MAX	0.16	801	12.53	807	0.00	808	0.00	808
		MIN	-5.45	807	-0.39	801	0.00	808	0.00	808
	2.69	MAX	0.15	801	14.62	807	0.00	808	0.00	808
		MIN	-5.46	807	-0.46	801	0.00	808	0.00	808
	3.07	MAX	0.13	801	16.72	807	0.00	808	0.00	808
		MIN	-5.48	807	-0.51	801	0.00	808	0.00	808
	3.45	MAX	0.11	801	18.83	807	0.00	808	0.00	808
		MIN	-5.50	807	-0.56	801	0.00	808	0.00	808
	3.84	MAX	0.09	801	20.95	807	0.00	808	0.00	808
		MIN	-5.53	807	-0.60	801	0.00	808	0.00	808
	4.22	MAX	0.05	801	23.07	807	0.00	808	0.00	808
		MIN	-5.56	807	-0.62	801	0.00	808	0.00	808
	4.60	MAX	0.02	801	25.21	807	0.00	808	0.00	808
		MIN	-5.59	807	-0.64	801	0.00	808	0.00	808

MAX/MIN FORCE VALUES FOR MEMB 1, AMONGST ALL SECT LOCATIONS

	FY/ FZ	DIST DIST	LD LD	MZ/ MY	DIST DIST	LD LD	FX	DIST	LD
MAX.	0.18	1.53	801	25.21	4.60	807			
	0.00	0.00	801	0.00	0.00	801	5.67 C	4.60	805
MIN.	-5.59	4.60	807	-0.64	4.60	801			
	0.00	4.60	808	0.00	4.60	808	1.69 C	0.00	801

2	0.00	MAX	-0.12	801	0.00	808	0.00	808	0.00	808
		MIN	-5.49	807	0.00	808	0.00	808	0.00	808
	0.38	MAX	-0.10	801	2.10	807	0.00	808	0.00	808
		MIN	-5.48	807	0.04	801	0.00	808	0.00	808

	0.77	MAX	-0.10	801	4.20	807	0.00	808	0.00	808
		MIN	-5.47	807	0.08	801	0.00	808	0.00	808
	1.15	MAX	-0.09	801	6.30	807	0.00	808	0.00	808
		MIN	-5.46	807	0.12	801	0.00	808	0.00	808
	1.53	MAX	-0.09	801	8.40	807	0.00	808	0.00	808
		MIN	-5.46	807	0.15	801	0.00	808	0.00	808
	1.92	MAX	-0.09	801	10.50	807	0.00	808	0.00	808
		MIN	-5.47	807	0.19	801	0.00	808	0.00	808
	2.30	MAX	-0.10	801	12.60	807	0.00	808	0.00	808
		MIN	-5.48	807	0.22	801	0.00	808	0.00	808
	2.69	MAX	-0.12	801	14.70	807	0.00	808	0.00	808
		MIN	-5.49	807	0.27	801	0.00	808	0.00	808
	3.07	MAX	-0.13	801	16.81	807	0.00	808	0.00	808
		MIN	-5.51	807	0.31	801	0.00	808	0.00	808
	3.45	MAX	-0.16	801	18.93	807	0.00	808	0.00	808
		MIN	-5.53	807	0.37	801	0.00	808	0.00	808
	3.84	MAX	-0.18	801	21.05	807	0.00	808	0.00	808
		MIN	-5.56	807	0.43	801	0.00	808	0.00	808
	4.22	MAX	-0.21	801	23.19	807	0.00	808	0.00	808
		MIN	-5.59	807	0.51	801	0.00	808	0.00	808
	4.60	MAX	-0.25	801	25.34	807	0.00	808	0.00	808
		MIN	-5.62	807	0.60	801	0.00	808	0.00	808

MAX/MIN FORCE VALUES FOR MEMB 2, AMONGST ALL SECT LOCATIONS

	FY/ FZ	DIST DIST	LD LD	MZ/ MY	DIST DIST	LD LD	FX	DIST	LD
MAX.	-0.09	1.53	801	25.34	4.60	807			
	0.00	0.00	801	0.00	0.00	801	5.69 C	4.60	808
MIN.	-5.62	4.60	807	0.00	0.00	808			
	0.00	4.60	808	0.00	4.60	808	0.06 C	0.00	801

3	0.00	MAX	4.30	805	23.72	807	0.00	808	0.00	808
		MIN	1.64	801	-1.08	801	0.00	808	0.00	808
	0.75	MAX	3.26	806	21.37	807	0.00	808	0.00	808
		MIN	-0.07	801	-1.03	801	0.00	808	0.00	808
	1.50	MAX	3.26	806	19.55	808	0.00	808	0.00	808
		MIN	-0.07	801	-1.00	802	0.00	808	0.00	808
	2.26	MAX	3.26	806	17.91	808	0.00	808	0.00	808
		MIN	-0.07	801	-2.70	802	0.00	808	0.00	808
	3.01	MAX	3.26	806	16.28	808	0.00	808	0.00	808
		MIN	-0.07	801	-3.56	802	0.00	808	0.00	808
	3.76	MAX	3.26	806	14.64	808	0.00	808	0.00	808
		MIN	-0.07	801	-4.41	802	0.00	808	0.00	808
	4.51	MAX	3.26	806	13.00	808	0.00	808	0.00	808
		MIN	-0.07	801	-5.26	802	0.00	808	0.00	808
	5.27	MAX	3.26	806	11.36	808	0.00	808	0.00	808
		MIN	-0.07	801	-6.12	802	0.00	808	0.00	808
	6.02	MAX	2.32	807	9.72	808	0.00	808	0.00	808
		MIN	-0.58	802	-6.94	802	0.00	808	0.00	808
	6.77	MAX	2.32	807	8.08	808	0.00	808	0.00	808
		MIN	-0.58	802	-6.50	802	0.00	808	0.00	808

7.52	MAX	2.32	807	6.87	808	0.00	808	0.00	808
	MIN	-0.58	802	-7.39	803	0.00	808	0.00	808
8.28	MAX	2.32	807	5.84	808	0.00	808	0.00	808
	MIN	-0.58	802	-8.61	803	0.00	808	0.00	808
9.03	MAX	2.32	807	4.81	808	0.00	808	0.00	808
	MIN	-0.58	802	-9.02	803	0.00	808	0.00	808

MAX/MIN FORCE VALUES FOR MEMB 3, AMONGST ALL SECT LOCATIONS

	FY/ FZ	DIST DIST	LD LD	MZ/ MY	DIST DIST	LD LD	FX	DIST	LD
MAX.	4.30	0.00	805	23.72	0.00	807			
	0.00	0.00	801	0.00	0.00	801	6.76 C	0.00	807
MIN.	-0.58	8.28	802	-9.02	9.03	803			
	0.00	9.03	808	0.00	9.03	808	0.25 C	9.03	801

4	0.00	MAX	3.13	807	4.81	808	0.00	808	0.00	808
		MIN	-0.39	802	-9.02	803	0.00	808	0.00	808
	1.00	MAX	3.13	807	2.69	808	0.00	808	0.00	808
		MIN	-0.39	802	-9.93	803	0.00	808	0.00	808
	2.00	MAX	3.13	807	0.57	808	0.00	808	0.00	808
		MIN	-0.39	802	-10.83	803	0.00	808	0.00	808
	3.00	MAX	2.20	804	-0.32	801	0.00	808	0.00	808
		MIN	-0.82	803	-10.08	803	0.00	808	0.00	808
	4.00	MAX	2.20	804	-0.28	801	0.00	808	0.00	808
		MIN	-0.82	803	-10.68	804	0.00	808	0.00	808
	5.00	MAX	2.12	808	-0.24	801	0.00	808	0.00	808
		MIN	-0.82	803	-11.21	804	0.00	808	0.00	808
	6.00	MAX	2.12	808	-0.20	801	0.00	808	0.00	808
		MIN	-0.82	803	-11.68	804	0.00	808	0.00	808
	7.00	MAX	2.12	808	-0.16	801	0.00	808	0.00	808
		MIN	-0.82	803	-12.15	804	0.00	808	0.00	808
	8.00	MAX	2.12	808	-0.12	801	0.00	808	0.00	808
		MIN	-0.82	803	-12.62	804	0.00	808	0.00	808
	9.00	MAX	1.49	805	-0.08	801	0.00	808	0.00	808
		MIN	-1.26	804	-12.61	808	0.00	808	0.00	808
	10.00	MAX	1.49	805	-0.04	801	0.00	808	0.00	808
		MIN	-1.26	804	-13.39	805	0.00	808	0.00	808
	11.00	MAX	0.59	806	-0.01	801	0.00	808	0.00	808
		MIN	-1.26	804	-13.39	808	0.00	808	0.00	808
	12.00	MAX	0.59	806	0.03	801	0.00	808	0.00	808
		MIN	-1.26	804	-13.78	808	0.00	808	0.00	808

MAX/MIN FORCE VALUES FOR MEMB 4, AMONGST ALL SECT LOCATIONS

	FY/ FZ	DIST DIST	LD LD	MZ/ MY	DIST DIST	LD LD	FX	DIST	LD

MAX.	3.13	0.00	807	4.81	0.00	808			
	0.00	0.00	801	0.00	0.00	801	6.32 C	0.00	807
MIN.	-1.26	12.00	804	-13.78	12.00	808			
	0.00	12.00	808	0.00	12.00	808	0.26 C	12.00	801

5	0.00	MAX	2.87	806	7.44	804	0.00	808	0.00	808
		MIN	0.04	801	-0.95	807	0.00	808	0.00	808
	1.00	MAX	2.87	806	6.39	803	0.00	808	0.00	808
		MIN	0.04	801	-2.99	807	0.00	808	0.00	808
	2.00	MAX	2.87	806	5.57	803	0.00	808	0.00	808
		MIN	0.04	801	-4.97	807	0.00	808	0.00	808
	3.00	MAX	2.87	806	4.74	803	0.00	808	0.00	808
		MIN	0.04	801	-5.29	807	0.00	808	0.00	808
	4.00	MAX	1.96	805	3.92	803	0.00	808	0.00	808
		MIN	0.04	801	-7.02	806	0.00	808	0.00	808
	5.00	MAX	1.96	805	3.10	803	0.00	808	0.00	808
		MIN	0.04	801	-8.16	806	0.00	808	0.00	808
	6.00	MAX	1.96	805	2.27	803	0.00	808	0.00	808
		MIN	0.04	801	-9.31	806	0.00	808	0.00	808
	7.00	MAX	1.96	805	1.45	802	0.00	808	0.00	808
		MIN	0.04	801	-10.45	806	0.00	808	0.00	808
	8.00	MAX	1.96	805	1.06	802	0.00	808	0.00	808
		MIN	-0.59	806	-11.52	806	0.00	808	0.00	808
	9.00	MAX	1.96	805	0.67	802	0.00	808	0.00	808
		MIN	-0.59	806	-10.94	806	0.00	808	0.00	808
	10.00	MAX	1.34	808	0.28	802	0.00	808	0.00	808
		MIN	-0.59	806	-12.50	805	0.00	808	0.00	808
	11.00	MAX	1.34	808	0.07	801	0.00	808	0.00	808
		MIN	-0.59	806	-12.74	805	0.00	808	0.00	808
	12.00	MAX	1.26	804	0.03	801	0.00	808	0.00	808
		MIN	-0.59	806	-13.78	808	0.00	808	0.00	808

MAX/MIN FORCE VALUES FOR MEMB 5, AMONGST ALL SECT LOCATIONS

	FY/ FZ	DIST DIST	LD LD	MZ/ MY	DIST DIST	LD LD	FX	DIST	LD
MAX.	2.87	0.00	806	7.44	0.00	804			
	0.00	0.00	801	0.00	0.00	801	6.32 C	0.00	807
MIN.	-0.59	12.00	806	-13.78	12.00	808			
	0.00	12.00	808	0.00	12.00	808	0.26 C	12.00	801

6	0.00	MAX	4.02	808	23.89	807	0.00	808	0.00	808
		MIN	0.01	801	0.57	801	0.00	808	0.00	808
	0.75	MAX	4.02	808	21.78	806	0.00	808	0.00	808
		MIN	0.01	801	0.56	801	0.00	808	0.00	808
	1.50	MAX	4.02	808	20.20	806	0.00	808	0.00	808
		MIN	0.01	801	0.56	801	0.00	808	0.00	808
	2.26	MAX	2.96	807	18.62	806	0.00	808	0.00	808
		MIN	0.01	801	0.55	801	0.00	808	0.00	808
	3.01	MAX	2.96	807	17.04	806	0.00	808	0.00	808

	MIN	0.01	801	0.55	801	0.00	808	0.00	808
3.76	MAX	2.96	807	15.46	806	0.00	808	0.00	808
	MIN	0.01	801	0.54	801	0.00	808	0.00	808
4.51	MAX	2.96	807	13.87	806	0.00	808	0.00	808
	MIN	0.01	801	0.54	801	0.00	808	0.00	808
5.27	MAX	2.96	807	12.29	806	0.00	808	0.00	808
	MIN	0.01	801	0.53	801	0.00	808	0.00	808
6.02	MAX	2.96	807	11.13	805	0.00	808	0.00	808
	MIN	0.01	801	0.53	801	0.00	808	0.00	808
6.77	MAX	2.96	807	10.11	805	0.00	808	0.00	808
	MIN	0.01	801	0.52	801	0.00	808	0.00	808
7.52	MAX	2.96	807	9.10	805	0.00	808	0.00	808
	MIN	0.01	801	0.52	801	0.00	808	0.00	808
8.28	MAX	2.10	806	8.09	805	0.00	808	0.00	808
	MIN	0.01	801	-0.01	807	0.00	808	0.00	808
9.03	MAX	2.10	806	7.44	804	0.00	808	0.00	808
	MIN	0.01	801	-0.95	807	0.00	808	0.00	808

MAX/MIN FORCE VALUES FOR MEMB 6, AMONGST ALL SECT LOCATIONS

	FY/ FZ	DIST DIST	LD LD	MZ/ MY	DIST DIST	LD LD	FX	DIST	LD
MAX.	4.02	0.00	808	23.89	0.00	807			
	0.00	0.00	801	0.00	0.00	801	6.74 C	0.00	807
MIN.	0.01	9.03	801	-0.95	9.03	807			
	0.00	9.03	808	0.00	9.03	808	0.26 C	9.03	801

********** END OF FORCE ENVELOPE FROM INTERNAL STORAGE **********

279. FINISH

********** END OF THE STAAD.Pro RUN **********

**** DATE= MAR 1,2016 TIME= 14:35:14 ****

```
*************************************************************
*   For technical assistance on STAAD.Pro, please visit     *
*   http://selectservices.bentley.com/en-US/                *
*                                                           *
*   Details about additional assistance from                *
*   Bentley and Partners can be found at program menu       *
*   Help->Technical Support                                 *
*                                                           *
*      Copyright (c) 1997-2014 Bentley Systems, Inc.
*                http://www.bentley.com                     *
*************************************************************
```