MILLER CONSTRUCTION, INC.

P.O. BOX 86 ASCUTNEY BLVD WINDSOR, VERMONT 05089-0086
TELEPHONE (802) 674-5525 / FAX (802) 674-5245

TRANSMITTAL

TO: Rob Young, PE Project Manager Vermont Agency of Transportation	DATE	PROJECT NO.
	3/4/2016	Woodstock BRF 0151 (21)

XX WE ENCLOSE THE FOLLOWING: _____ UNDER SEPARATE COVER WE ARE SENDING THE FOLLOWING

COPIES	NUMBER	DESCRIPTION	CODE
1		Precast Design Request and Clarifications - Rev 0	H
1		Precast Drawings LO1A - LO1D - Rev 0	H
1		Bolt Pocket Former	H
1		Dayton Richmond DBS	H
1		Dayton Richmond DI	H
1		Precast Design Calculations Rev 0	H
1		Silane-Siloxane CT 00005	H

CODE:

A FOR INITIAL APPROVAL
B FOR FINAL APPROVAL
C APPROVED AS NOTED-RESUBMISSION REQUIRED
D APPROVED AS NOTED-RESUBMISSION NOT REQUIRED
E DISAPPROVED-RESUBMIT
F QUOTATION REQUESTED
G APPROVED
H FOR APPROVAL
I AS REQUESTED OR REQUIRED
J FOR USE IN ERECTION
K LETTER FOLLOWS
L FOR FIELD CHECK
M FOR YOUR USE

BY: Paul

RFI -01

March 2, 2016

To: Paul Holloway, Miller Construction, Inc.
RE: VTAOT Route 106 Bridge Replacement T.H. 61 (Kendall Road), Woodstock, VT
CSI Job #: R-S22624

A. CSI requests that the bridge top is manufactured all level as it cannot be made to follow both the roadway and super elevation slopes. Please see submittal drawings for details with a level top slab.
B. CSI requests that the support shelf for approach slabs be cast in place in the field due to:
    a. It needs to follow the super elevation slope and c.i.p. method will help ensure that it will hit all the required elevations.
    b. It will have continuity and will lock all the bridge sections together.
C. CSI requests that the guardrail curbs be cast in place in the field in order to make sure it will achieve the accurate roadway curvature and will hit all the required elevations along with accurate placement of guardrail anchors bolts.
D. CSI requests that the "Precast Frame Roof Closure Pour Detail" on sheet 25 be replaced with a shear keyway which is the industry norm for rigid frame bridges. See submittal drawings for details.
E. CSI requests using Level I epoxy coated bar for the dowel bar splicers and dowel ins for connecting rigid bridge to the c.i.p. guardrail curbs and to the approach slab support shelves. The industry does not offer a Level II alternative.
F. CSI furthermore requests using Level I epoxy coated reinforcing in the wingwall anchors as these are premade stock items manufactured using epoxy reinforcing.

Submitted by:

Andrew Kostenko
Project Manager
Concrete Systems, Inc.
akostenko@csigroup.com

RIGID BRIDGE AND WINGWALL PIECE SCHEDULE (MX-FA5000SC30)					
MARK	QTY	LENGTH	YDS	WEIGHT	
C1	1	4.29	13.44	27.22	TONS
C2	6	4.29	13.44	27.22	TONS
C3	1	4.29	13.44	27.22	TONS
WW1	1	8.00	2.41	5.78	TONS
WW2	1	8.00	2.32	5.59	TONS
WW3	1	5.00	1.29	3.51	TONS
WW4	1	16.50	4.68	12.18	TONS

GENERAL NOTES:

1. REFERENCE STANDARDS:
   AASHTO "LRFD BRIDGE DESIGN SPECIFICATIONS"
   ASTM C1577
2. DESIGN PARAMETERS:
   LIVE LOAD: HL-93
   EARTH COVER: 0'-2'
   CONCRETE: DESIGN STRENGTH F'C = 5000 PSI
   UNIT WEIGHT = 150 PCF
   REINFORCING: FOOTINGS & PEDESTALS – ASTM A615 (REBAR) GR 60, PLAIN (VTAOT LEVEL I).
   RIGID BRIDGE, WINGWALLS AND APPROACH SLABS – Z-BAR (REBAR), GR 60 (VTAOT LEVEL II).
   SOIL: UNIT WEIGHT = 140 PCF
   MINIMUM LATERAL PRESSURE COEFFICIENT .25
   MAXIMUM LATERAL PRESSURE COEFFICIENT .50
   COVER TO REINFORCING: SEE DETAILS
3. WATER REPELLANT COATING TO BE APPLIED BY CSI ON ALL EXPOSED PRECAST CONCRETE SURFACES EXCEPT FOR THE INTERIOR SURFACES OF RIGID BRIDGE.
4. DBS ARE DOWEL BAR SPLICERS AND DI ARE DOWEL IN BARS (BY DAYTON SUPERIOR) AND ARE SUPPLIED BY CSI. DI'S SHALL BE BENT AND/OR CUT AS NEEDED AND INSTALLED IN FIELD BY OTHERS.
5. CONTRACTOR TO PROVIDE AND INSTALL 1/2" JOINT FILLER AT INTERFACE BETWEEN WINGWALLS AND RIGID FRAME LEGS.

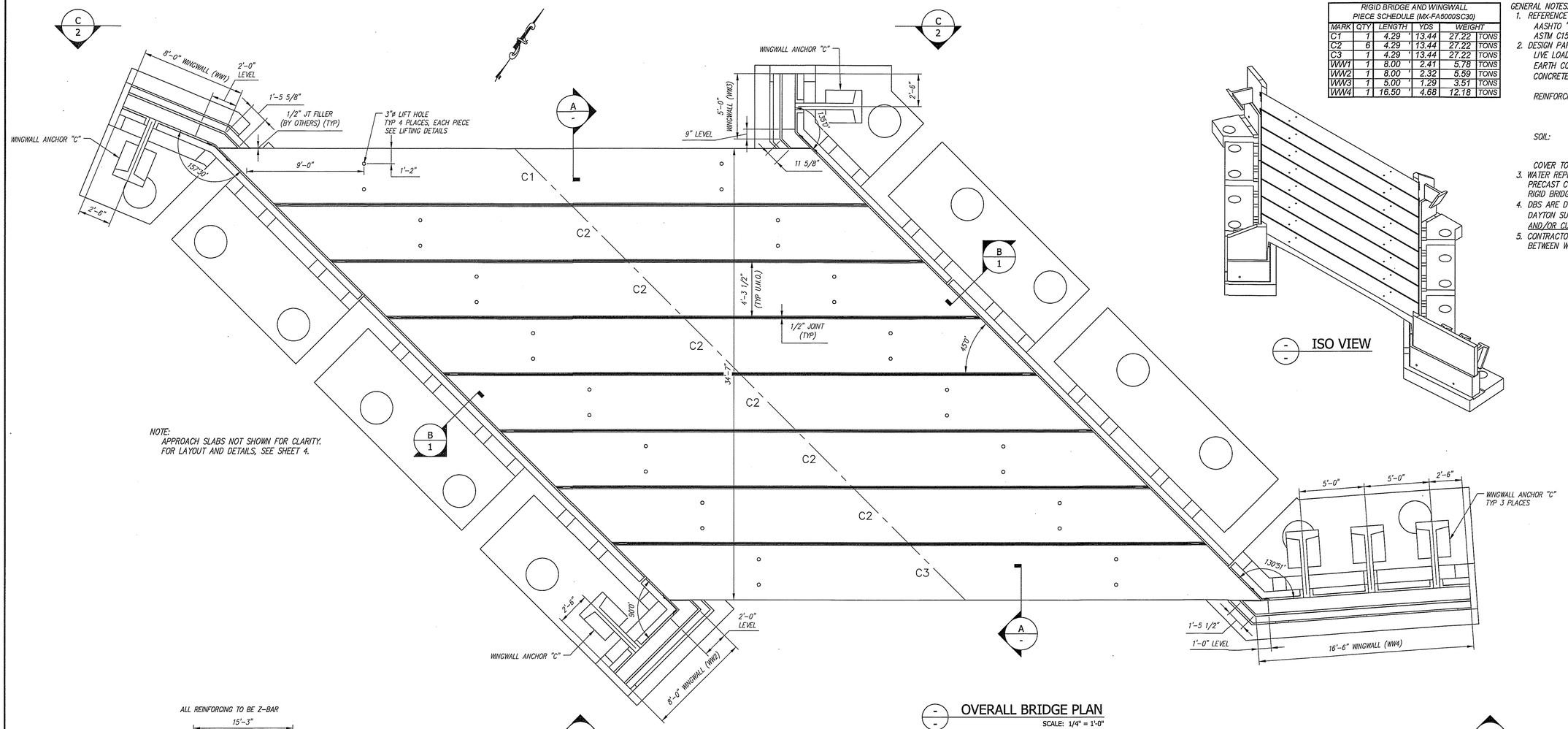

NOTE:
APPROACH SLABS NOT SHOWN FOR CLARITY.
FOR LAYOUT AND DETAILS, SEE SHEET 4.

OVERALL BRIDGE PLAN
SCALE: 1/4" = 1'-0"

ISO VIEW

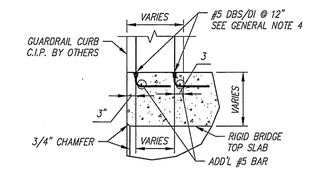

A SECTION
SCALE: 1/2" = 1'-0"

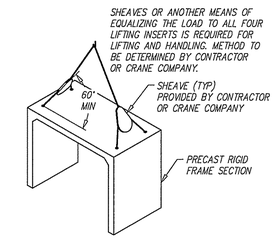

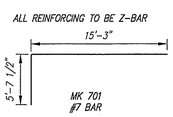

RIGID BRIDGE BENDING SCHEDULE
SCALE: 1/8" = 1'-0"

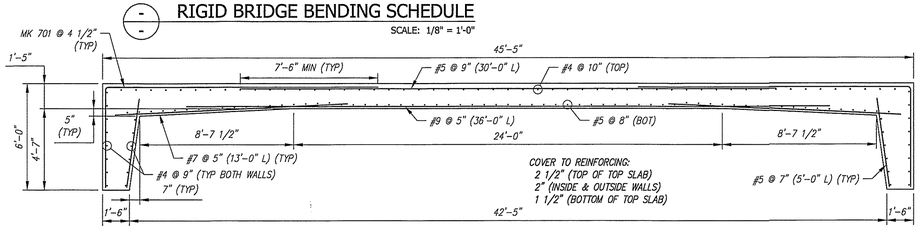

TYPICAL RIGID BRIDGE REINFORCING SECTION
SCALE: 1/4" = 1'-0"

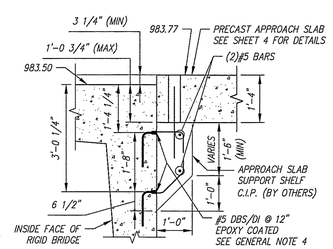

APPR. SLAB SUPPORT SHELF (AT LOWEST ELEVATION)
SCALE: 1/2" = 1'-0"

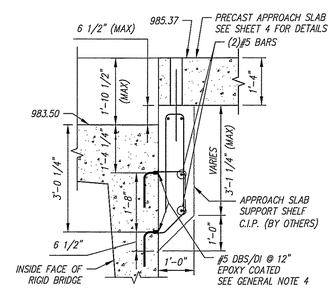

APPR. SLAB SUPPORT SHELF (AT HIGHEST ELEVATION)
SCALE: 1/2" = 1'-0"

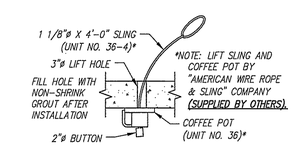

LIFTING DETAILS
SCALE: N.T.S.

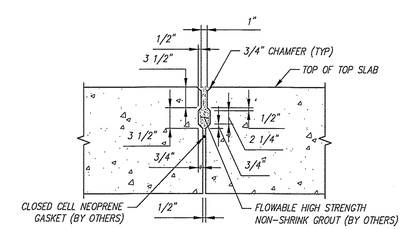

RIGID FRAME TOP SLAB JOINT DETAIL
SCALE: 1" = 1'-0"

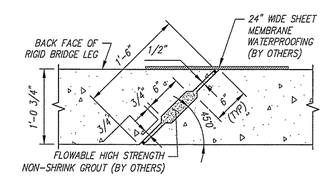

RIGID FRAME LEG JOINT DETAIL
SCALE: 1" = 1'-0"

Contractor is to verify that all information shown on drawings has been thoroughly checked, complies with the contract documents and is adequate to meet the field conditions. Some dimensions and details may differ slightly from contract drawings to accommodate the manufacturing or design process. Approval of this drawing indicates that any deviation from the contract documents has been reviewed and found to be acceptable. Production will not commence until receipt of signed, approved shop drawings.

This drawing contains information proprietary to CONCRETE SYSTEMS, INC. This drawing is disclosed with the understanding that it will be retained in confidence and its use limited solely to the purpose for which it is disclosed. It is understood that no reproduction of this drawing is authorized without permission from CONCRETE SYSTEMS, INC. and that it will be returned to CONCRETE SYSTEMS, INC. upon request.

STATE OF VERMONT
CHRISTOPHER M. YOCK
NO. 77086
Structural
LICENSED
PROFESSIONAL ENGINEER
3/1/16
Structural Design of Rigid Bridge & Wingwalls Only

Rev.	Date	DESCRIPTION	By
10			
9			
8			
7			
6			
5			
4			
3			
2			
1			

REVISIONS

This drawing is based upon information provided from the following documents and/or sources:
Engineer: STANTEC CONSULTING SERVICES, INC.
Project No:
Drawings: PROJECT PLANS
Specifications:
Other Sources:

CSI Concrete Systems Inc.
9 Commercial St., Hudson, NH,03051
Phone 603-889-4163
Fax 603-889-2417

STATE AGENCY
VTrans Working to Get You There

Drawn by	A. KOSTENKO	Date	02/03/2016
Reviewed by		Date	
Approved by		Date	

VTAOT PROJ. NO.: BRF 0151(21)

MILLER CONSTRUCTION, INC.
ROUTE 106 BRIDGE REPLACEMENT T.H. 61 (KENDALL ROAD)
WOODSTOCK, VT

D — PRECAST RIGID BRIDGE LAYOUT & DETAILS — REV 0
Drawing No. R-S22624-L01A
Quantity: Project No: SHEET 1 OF 4

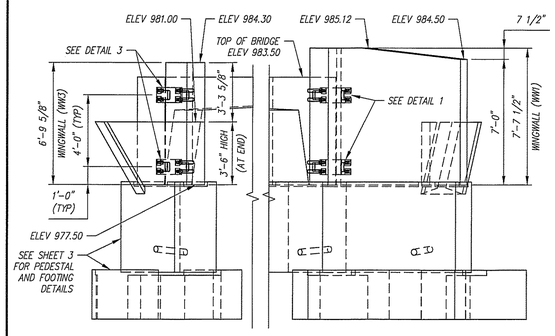

C-C / 1 WEST END ELEVATION
SCALE: 1/4" = 1'-0"

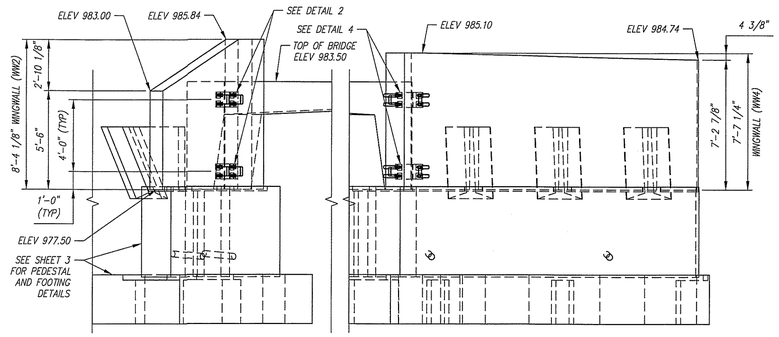

D-D / 1 EAST END ELEVATION
SCALE: 1/4" = 1'-0"

WINGWALL GENERAL NOTES:
1. REFERENCE STANDARD:
   AASHTO LRFD SPECIFICATIONS
2. DESIGN PARAMETERS:
   SOIL BEARING: 3000 PSF (TO BE VERIFIED BY ENGINEER)
   CONCRETE: DESIGN STRENGTH F'C = 4000 PSI
   UNIT WEIGHT = 150 PCF
   REINFORCING: Z-BAR (REBAR), GR 60 (YTAOT LEVEL II), EXCEPT IN WINGWALL ANCHORS, WHERE IT SHALL BE ASTM A615 (REBAR), GRADE 60, EPOXY COATED.
   SOIL: UNIT WEIGHT = 140 PCF
   MINIMUM LATERAL PRESSURE COEFFICIENT .25
   MAXIMUM LATERAL PRESSURE COEFFICIENT .50
   COVER TO REINFORCING: 2" U.N.O.
3. WINGWALLS HAVE BEEN DESIGNED FOR GENERAL SITE CONDITIONS. THE PROJECT ENGINEER SHALL BE RESPONSIBLE FOR THE STRUCTURE'S SUITABILITY TO THE EXISTING SITE CONDITIONS AND FOR THE HYDRAULIC EVALUATION, INCLUDING SCOUR AND CONFIRMATION OF SOIL CONDITIONS.
4. PRIOR TO CONSTRUCTION, CONTRACTOR MUST VERIFY ALL ELEVATIONS SHOWN THROUGH THE ENGINEER.

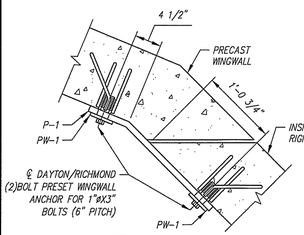

1 / 2 DETAIL
Scale: 1 = 1'-0"

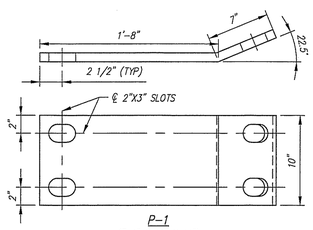

P-1
(℄ 1" X 10" X 14")
(GALVANIZED AS PER ASTM A153)
(TOTAL REQUIRED = 2)

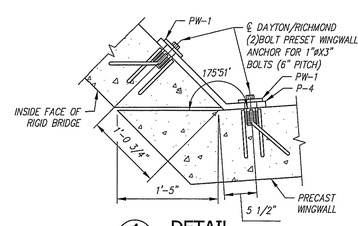

4 / 2 DETAIL
Scale: 1 = 1'-0"

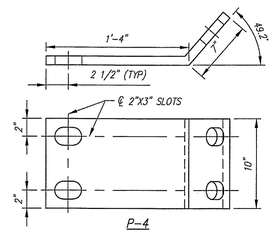

P-4
(℄ 1" X 10" X 14")
(GALVANIZED AS PER ASTM A153)
(TOTAL REQUIRED = 2)

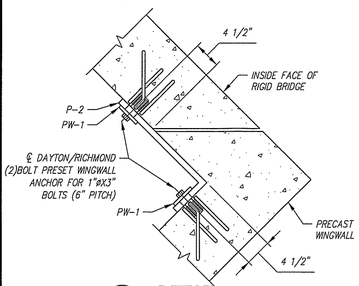

2 / 2 DETAIL
Scale: 1 = 1'-0"

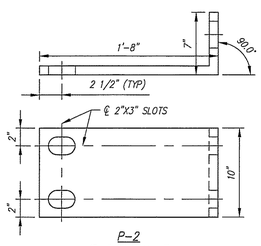

P-2
(℄ 1" X 10" X 14")
(GALVANIZED AS PER ASTM A153)
(TOTAL REQUIRED = 2)

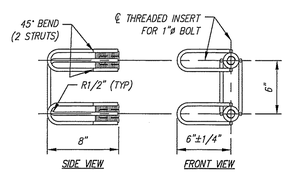

DAYTON/RICHMOND TWO BOLT PRESET ANCHOR

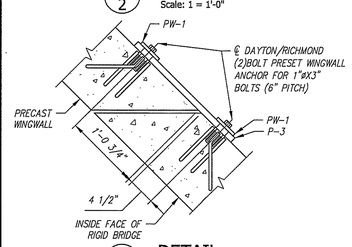

3 / 2 DETAIL
Scale: 1 = 1'-0"

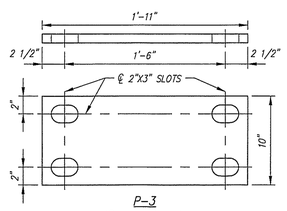

P-3
(℄ 1" X 10" X 14")
(GALVANIZED AS PER ASTM A153)
(TOTAL REQUIRED = 2)

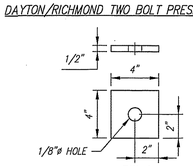

PW-1
(℄ WASHER, 1/2" X 4" X 4")
(GALVANIZED AS PER ASTM A153)
(TOTAL REQUIRED = 32)

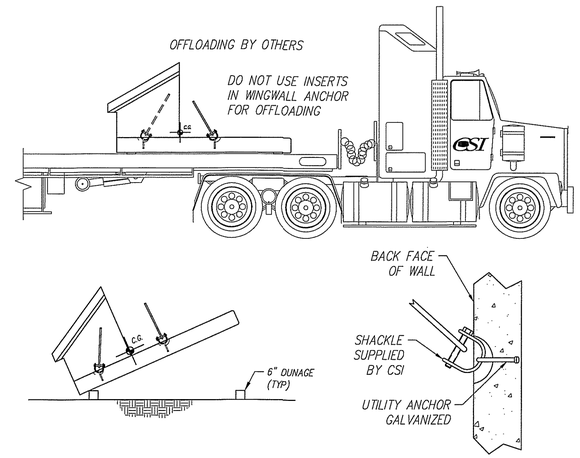

WINGWALL LIFTING/OFFLOADING & TRIPPING DETAILS
Scale: N.T.S.

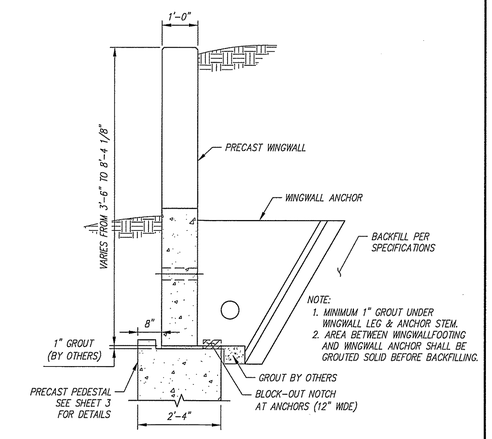

NOTE:
1. MINIMUM 1" GROUT UNDER WINGWALL LEG & ANCHOR STEM.
2. AREA BETWEEN WINGWALLFOOTING AND WINGWALL ANCHOR SHALL BE GROUTED SOLID BEFORE BACKFILLING.

TYPICAL WINGWALL SECTION
SCALE: 1/2" = 1'-0"

BACKFILL DESCRIPTION							
Group Classification	A-1		A-3	A-2			
	A-1-a	A-1-b		A-2-4	A-2-5	A-2-6	A-2-7
Sieve Analysis, Percent Passing							
No. 10	50 max.						
No. 40	30 max.	50 max.	51 min.				
No. 200	15 max.	25 max.	10 max.	35 max.	35 max.	35 max.	35 max.
Characteristics of Fraction Passing No. 40							
Liquid Limit				40 max.	41 min.	40 max.	41 min.
Plasticity Index	6 max.		N.P.	10 max.	10 max.	11 min.	11 min.
Usual Types of Significant Constituent Materials	Stone Fragments, Gravel & Sand		Fine Sand	Silty or Clayey Gravel and Sand			
General Rating as Subgrade	Excellent to Good						

NOTES
1. BACKFILLING OPERATIONS WITHIN THE C.B.Z. SHALL BE PERFORMED IN LIFTS OF 8" OR LESS (LOOSE DEPTH).
2. MAXIMUM DRY DENSITY SHALL BE DETERMINED BY AASHTO T-99 OR OTHER APPROVED METHODS.
3. BACKFILL SHALL BE COMPACTED IN LAYERS UNTIL THE DENSITY IS NOT LESS THAN 95% OF THE MAXIMUM DRY DENSITY.

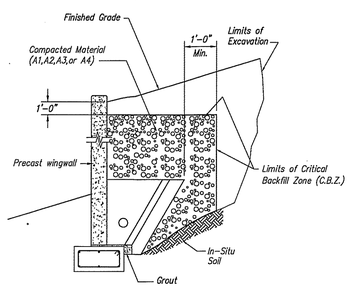

WINGWALL BACKFILL REQUIREMENTS

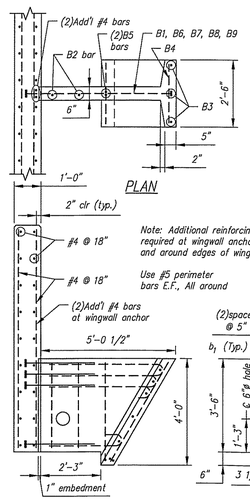

Note: Additional reinforcing required at wingwall anchors and around edges of wingwall

Use #5 perimeter bars E.F., All around

BAR LIST					
MARK	QTY.	SIZE	a	TYPE	LENGTH
B1	4	#6	2'-7"	3	——
B2	2	#5	——	Str.	3'-2"
B3	4	#5	——	Str.	4'-2"
B4	7	#5	——	Str.	2'-2"
B5	2	#5	3'-8"	2	——
B6	1	#5	2'-9"	1	——
B7	1	#5	3'-9"	1	——
B8	1	#5	4'-0"	1	——
B9	1	#5	4'-3"	1	——

Note: "Str." denotes straight bar. Standard clearance = 2"

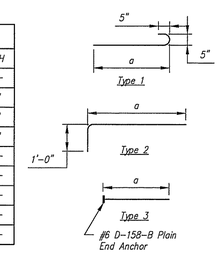

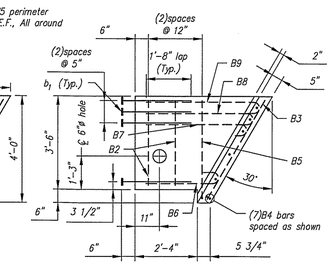

PRECAST ANCHOR TYPE C

Contractor is to verify that all information shown on drawings has been thoroughly checked, complies with the contract documents and is adequate to meet the field conditions. Some dimensions and details may differ slightly from contract drawings to accommodate the manufacturing or design process. Approval of this drawing indicates that any deviation from the contract documents has been reviewed and found to be acceptable. Production will not commence until receipt of signed, approved shop drawings.

This drawing contains information proprietary to CONCRETE SYSTEMS, INC. This drawing is disclosed with the understanding that it will be retained in confidence and its use limited solely to the purpose for which it is disclosed. It is understood that no reproduction of this drawing is authorized without permission from CONCRETE SYSTEMS, INC. and that it will be returned to CONCRETE SYSTEMS, INC. upon request.

STATE OF VERMONT
CHRISTOPHER M. VICK
NO. 77926
Structural
LICENSED
PROFESSIONAL ENGINEER
5/1/16
Structural Design of Rigid Bridge & Wingwalls Only

Rev.	Date	DESCRIPTION	By
10			
9			
8			
7			
6			
5			
4			
3			
2			
1			

REVISIONS

This drawing is based upon information provided from the following documents and/or sources:
Engineer: STANTEC CONSULTING SERVICES, INC.
Project No:
Drawings: PROJECT PLANS
Specifications:
Other Sources:

CSI Concrete Systems Inc.
9 Commercial St., Hudson, NH 03051
Phone 603-889-4163
Fax 603-889-2417

STATE AGENCY
VTrans Working to Get You There

Drawn By	A. KOSTENKO	Date 02/03/2016
Reviewed By		Date
Approved By		Date

VTAOT PROJ. NO.: BRF 0151(21)

MILLER CONSTRUCTION, INC.
ROUTE 106 BRIDGE REPLACEMENT T.H. 61 (KENDALL ROAD)
WOODSTOCK, VT

D — ELEVATIONS AND WINGWALL DETAILS — REV 0
Drawing No. R-S22624-L01B
Quantity: Project No: SHEET 2 OF 4

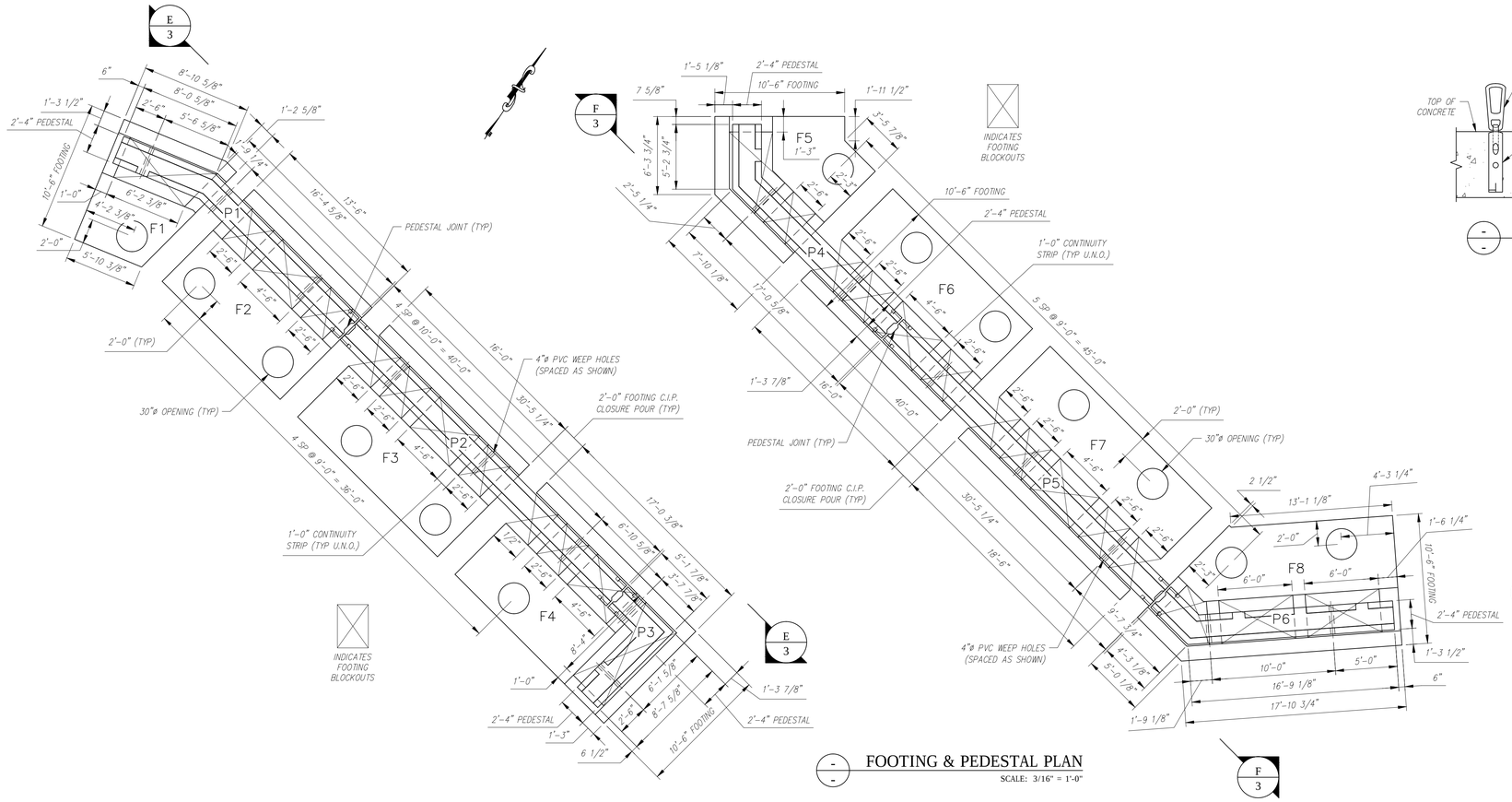

FOOTING & PEDESTAL PLAN
SCALE: 3/16" = 1'-0"

FOOTING AND PEDESTAL PIECE SCHEDULE (MX-FA5000SC30)					
MARK	QTY	LENGTH	YDS	WEIGHT	
F1	1	7.99 '	5.52	11.18	TONS
F2	1	13.50 '	9.90	20.05	TONS
F3	1	16.00 '	11.68	23.66	TONS
F4	1	17.03 '	11.20	22.69	TONS
F5	1	9.81 '	6.84	13.84	TONS
F6	1	16.00 '	11.68	23.66	TONS
F7	1	18.50 '	13.46	27.27	TONS
F8	1	18.11 '	12.59	25.49	TONS
P1	1	23.98 '	10.10	20.45	TONS
P2	1	30.44 '	12.81	25.94	TONS
P3	1	11.46 '	4.81	9.74	TONS
P4	1	21.32 '	8.98	18.18	TONS
P5	1	30.44 '	12.81	25.94	TONS
P6	1	19.96 '	8.40	17.00	TONS

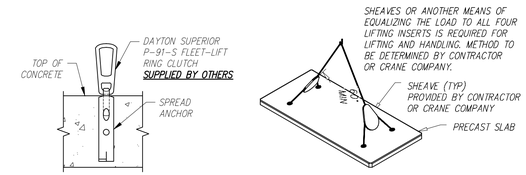

TYPICAL LIFTING DETAILS
SCALE: N.T.S.

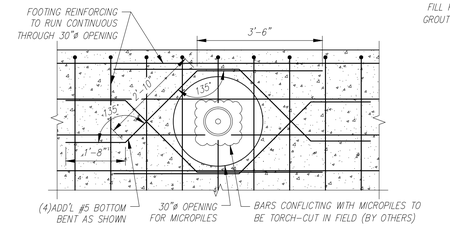

ADDITIONAL REINFORCING AT 30" OPENINGS
SCALE: 1/2" = 1'-0"

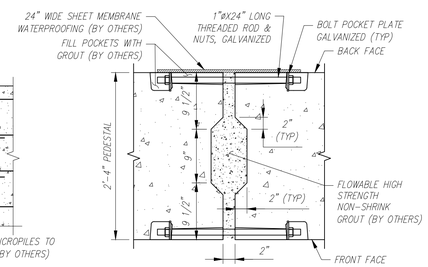

PEDESTAL JOINT DETAIL
SCALE: N.T.S.

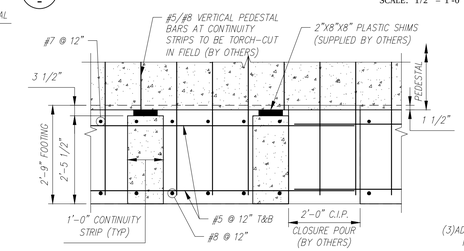

TYP. SECTION THROUGH CONTINUITY STRIPS
SCALE: 1/2" = 1'-0"

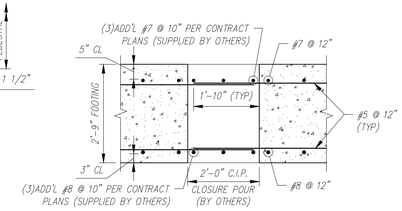

FOOTING CLOSURE POUR DETAIL
SCALE: 1/2" = 1'-0"

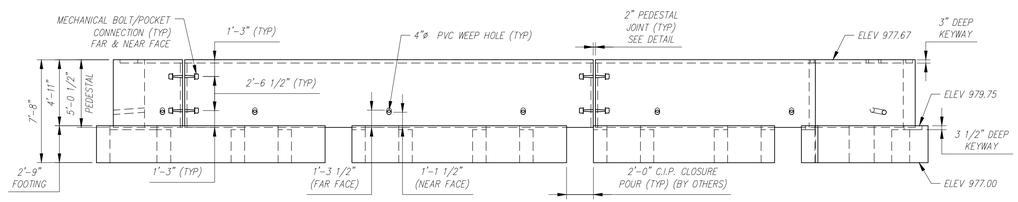

SOUTH FOOTING/PEDESTAL ELEVATION
SCALE: 3/16" = 1'-0"

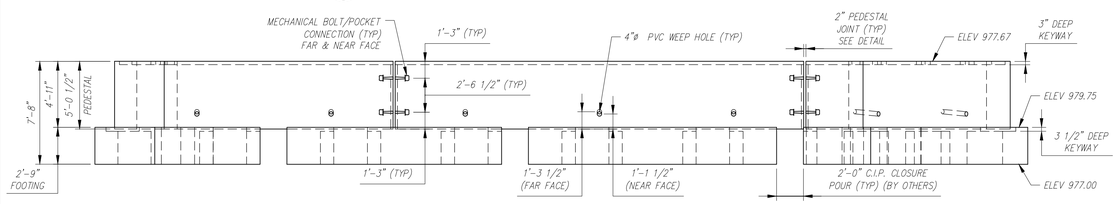

NORTH FOOTING/PEDESTAL ELEVATION
SCALE: 3/16" = 1'-0"

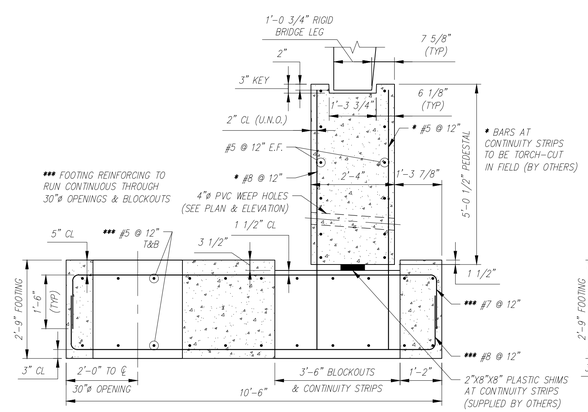

FOOTING & PEDESTAL SECTION (AT RIGID BRIDGE LEG)
SCALE: 1/2" = 1'-0"

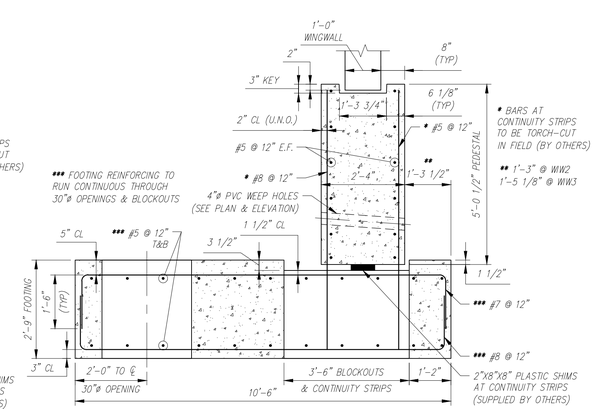

FOOTING & PEDESTAL SECTION (AT WINGWALLS)
SCALE: 1/2" = 1'-0"

Contractor is to verify that all information shown on drawings has been thoroughly checked, complies with the contract documents and is adequate to meet the field conditions. Some dimensions and details may differ slightly from contract drawings to accommodate the manufacturing or design process. Approval of this drawing indicates that any deviation from the contract documents has been reviewed and found to be acceptable. Production will not commence until receipt of signed, approved shop drawings.

This drawing contains information proprietary to CONCRETE SYSTEMS, INC. This drawing is disclosed with the understanding that it will be retained in confidence and its use limited solely to the purpose for which it is disclosed. It is understood that no reproduction of this drawing is authorized without permission from CONCRETE SYSTEMS, INC. and that it will be returned to CONCRETE SYSTEMS, INC. upon request.

Rev.	Date	DESCRIPTION	By
10			
9			
8			
7			
6			
5			
4			
3			
2			
1			

REVISIONS

This drawing is based upon information provided from the following documents and/or sources:
Engineer: STANTEC CONSULTING SERVICES, INC.
Project No:
Drawings: PROJECT PLANS
Specifications:
Other Sources:

Concrete Systems Inc.
9 Commercial St., Hudson, NH,03051
Phone 603-889-4163
Fax 603-889-2417

STATE AGENCY
VTrans Working to Get You There

Drawn By	Date
A KOSTENKO	03/03/2016
Reviewed By	Date
Approved By	Date

VTAOT PROJ. NO.: BRF 0151(21)

MILLER CONSTRUCTION, INC.
ROUTE 106 BRIDGE REPLACEMENT T.H. 61 (KENDALL ROAD)
WOODSTOCK, VT

D — FOOTING/PEDESTAL PLAN AND DETAILS — REV 0
Drawing No. R-S22624-L01C
Quantity: Project No: SHEET 3 OF 4

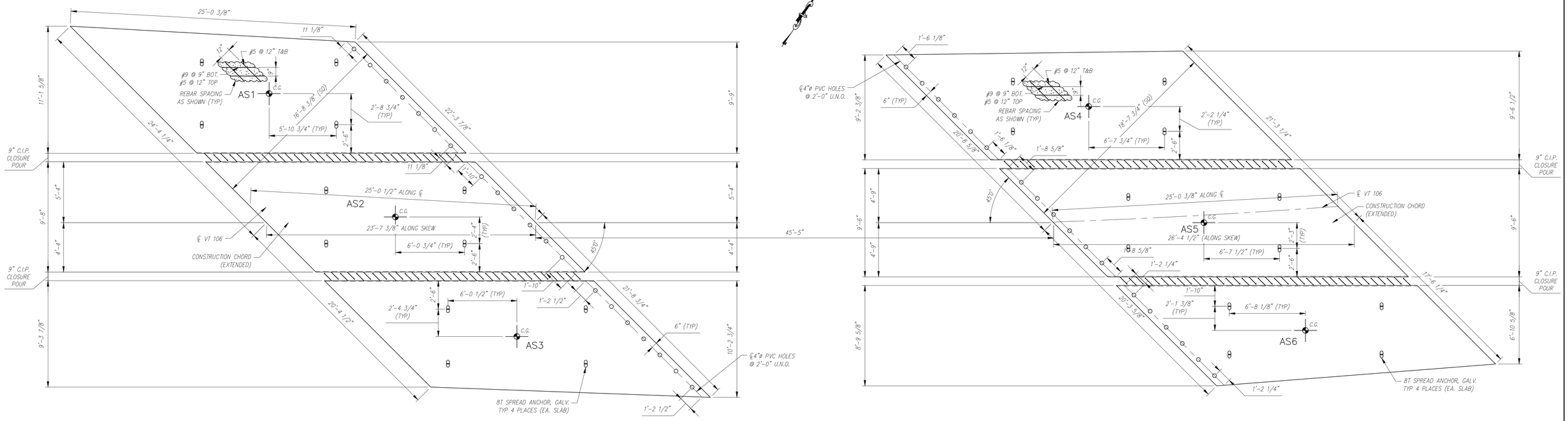

APPROACH SLAB PLAN

SCALE: 1/4" = 1'-0"

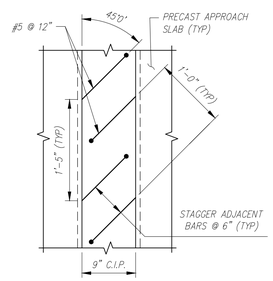

TYPICAL C.I.P. CLOSURE POUR PLAN

SCALE: 1" = 1'-0"

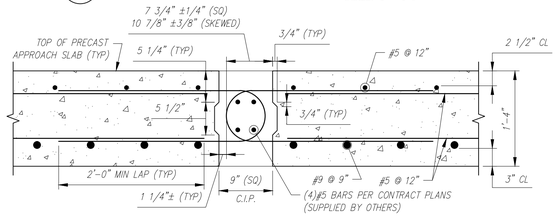

TYPICAL C.I.P. CLOSURE POUR SECTION

SCALE: 1" = 1'-0"

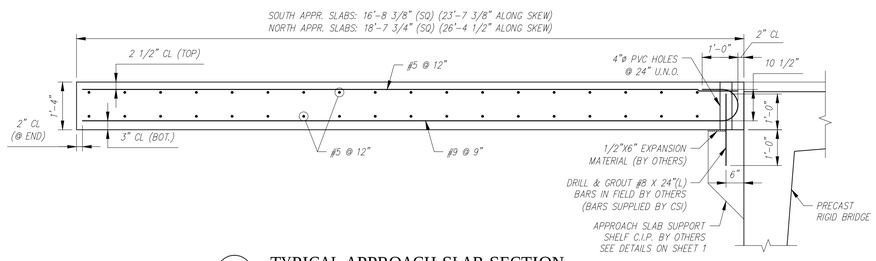

TYPICAL APPROACH SLAB SECTION

SCALE: 1/2" = 1'-0"

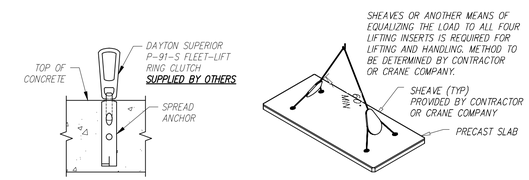

APPROACH SLAB LIFTING DETAILS

SCALE: N.T.S.

APPROACH SLAB PIECE SCHEDULE (MX-FA5000SC30)					
MARK	QTY	LENGTH	YDS	WEIGHT	
AS1	1	23.61 '	12.18	24.67	TONS
AS2	1	23.61 '	11.27	22.83	TONS
AS3	1	23.61 '	11.40	23.09	TONS
AS4	1	26.38 '	12.20	24.71	TONS
AS5	1	26.38 '	12.37	25.06	TONS
AS6	1	26.38 '	10.22	20.70	TONS

Contractor is to verify that all information shown on drawings has been thoroughly checked, complies with the contract documents and is adequate to meet the field conditions. Some dimensions and details may differ slightly from contract drawings to accommodate the manufacturing or design process. Approval of this drawing indicates that any deviation from the contract documents has been reviewed and found to be acceptable. Production will not commence until receipt of signed, approved shop drawings.

This drawing contains information proprietary to CONCRETE SYSTEMS, INC. This drawing is disclosed with the understanding that it will be retained in confidence and its use limited solely to the purpose for which it is disclosed. It is understood that no reproduction of this drawing is authorized without permission from CONCRETE SYSTEMS, INC. and that it will be returned to CONCRETE SYSTEMS, INC. upon request.

Rev.	Date	DESCRIPTION	By
10			
9			
8			
7			
6			
5			
4			
3			
2			
1			

REVISIONS

This drawing is based upon information provided from the following documents and/or sources:
Engineer: STANTEC CONSULTING SERVICES, INC.
Project No:
Drawings: PROJECT PLANS
Specifications:
Other Sources:

Concrete Systems Inc.
9 Commercial St., Hudson, NH,03051
Phone 603-889-4163
Fax 603-889-2417

STATE AGENCY
VTrans Working to Get You There

Drawn By	Date
A KOSTENKO	03/03/2016
Reviewed By	Date
Approved By	Date

VTAOT PROJ. NO.: BRF 0151(21)

MILLER CONSTRUCTION, INC.
ROUTE 106 BRIDGE REPLACEMENT T.H. 61 (KENDALL ROAD)
WOODSTOCK, VT

D

APPROACH SLAB PLAN AND DETAILS

Drawing No. R-S22624-L01D

REV 0

Quantity: Project No: SHEET 4 OF 4

> BOLT POCKET FORMER

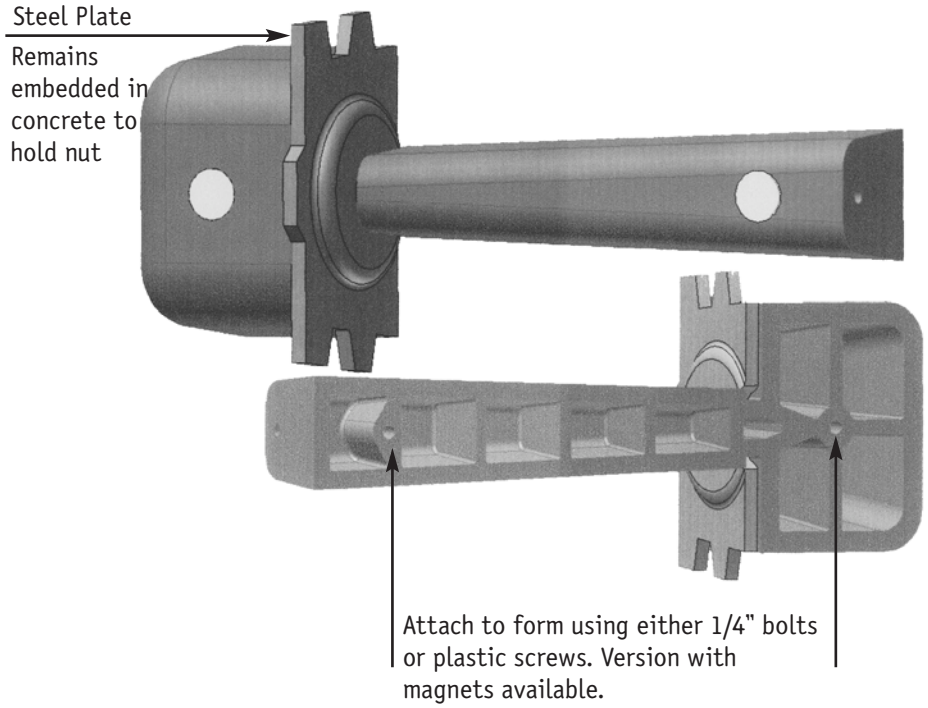

Introducing our Bolt Pocket Former – the ideal solution for tying together sections of box culvert or precast walls. This dual purpose forming device creates both a groove through the joint and a pocket for the bolt. The steel plate that remains embedded in the concrete accepts up to 1" rod. Molded out of a specially formulated urethane, our bolt pocket former will last for at least 50 pours when properly maintained. Call for more details and pricing information.

Pennsylvania Insert Corporation

phone: 800.220.4857 sales@pennsylvaniainsert.com fax: 610.948.9750

> serving concrete producers for over 30 years

BOLT POCKET FORMER

The simple forming solution for tying together sections of box culvert or precast walls.

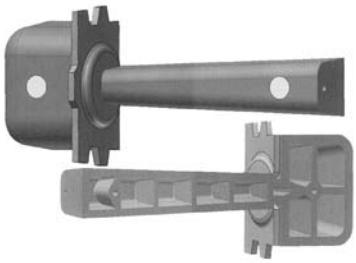

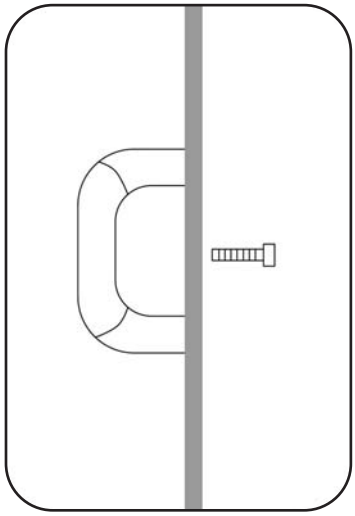

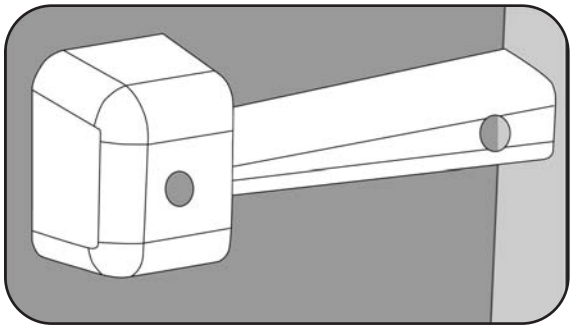

1. Attach Bolt Pocket Former to form using either 1/4” bolts or plastic screws for non collapsing forms. The inserts are replaceable should the threads show signs of wear after numerous uses.

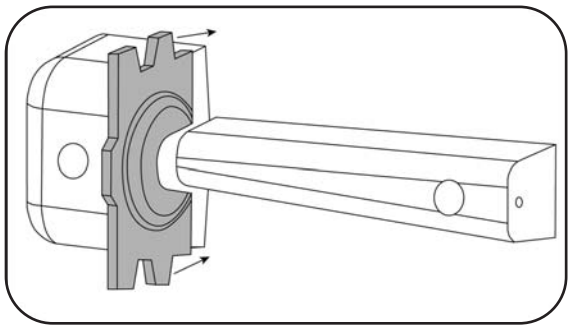

2. Slide steel plate onto Bolt Pocket Former. Pour.

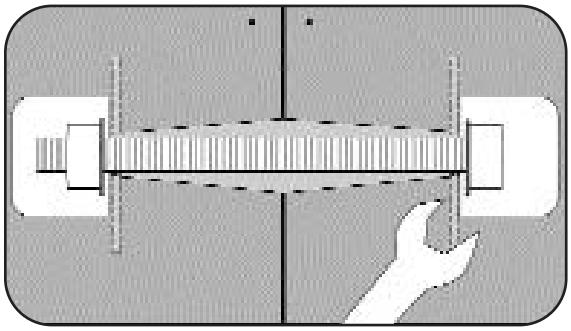

3. After stripping form, slide Bolt Pocket Former out using pliers. Steel plate remains embedded in concrete. A groove through the joint and bolt pocket are formed. For field installation*, the steel plate accepts up to 1” rod.
*We provide a field installation kit consisting of rod, 2 nuts, and 2 washers for an additional charge.

Pennsylvania Insert Corporation

FOR INFO. CALL 1-800-220-4857
or sales@pennsylvaniainsert.com

Fax to:	Customer		Approved/Notes	PA Insert Corp
Fax#	Project			PO Box 199 Spring City PA 19475 tel: 610-948-9688 fax: 610-948-9750
From	Job#	Ship Date		
Date	PA Insert Quote/Order#	Page _____of _____		email: sales@pennsylvaniainsert.com web: www.pennsylvaniainsert.com

BOLT POCKET FORMER (for up to 1" bolt)

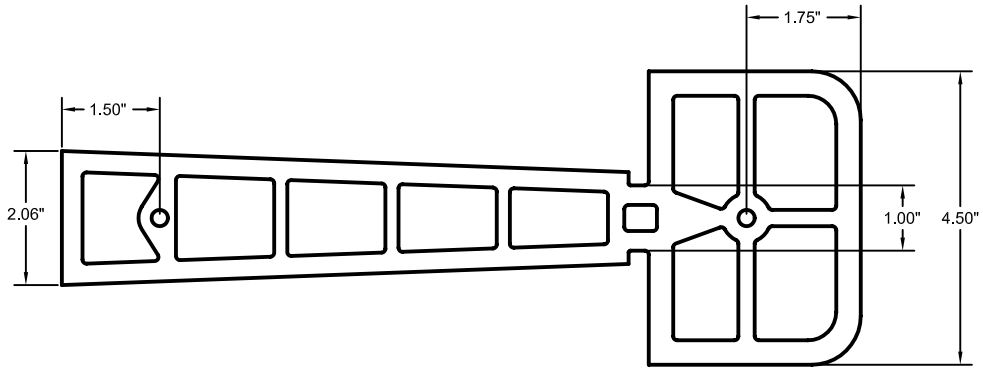

- Made from durable Urethane for reusability
- Ribbed construction increases strength
- *Replacable 1/4" Threaded Inserts
- **1/4" Galvanized Steel Plate Standard
- Available with magnets to attach to form

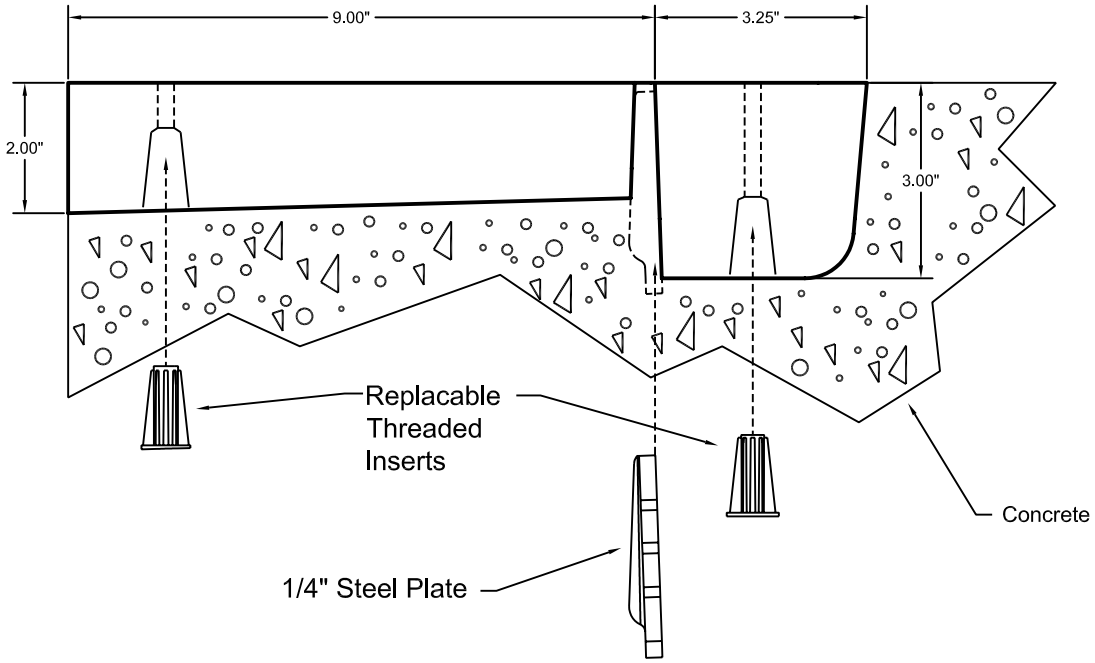

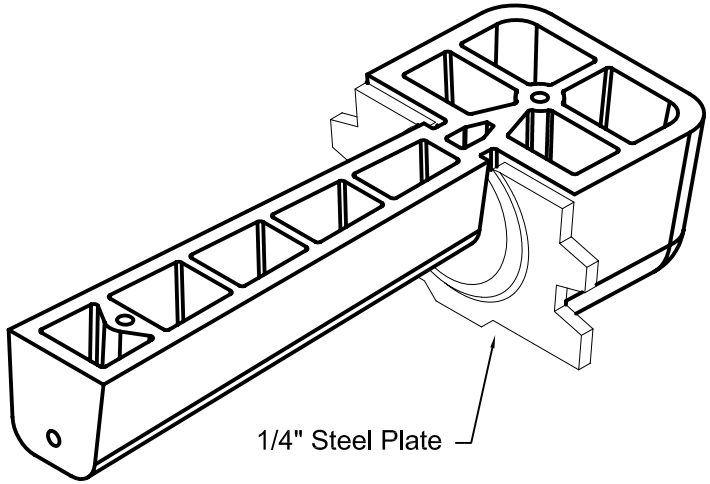

*Threaded Inserts sold separately (Part Number 1200)

**Steel Plate stays in concrete, sold separately (Part Number 4024)

06/03/04

Fax to:	Customer		Approved/Notes	PA Insert Corp
Fax#	Project			
From	Job#	Ship Date		
Date	PA Insert Quote/Order#	Page _____of _____		

PO Box 199
Spring City PA 19475
tel: 610-948-9688
fax: 610-948-9750

email: sales@pennsylvaniainsert.com
web: www.pennsylvaniainsert.com

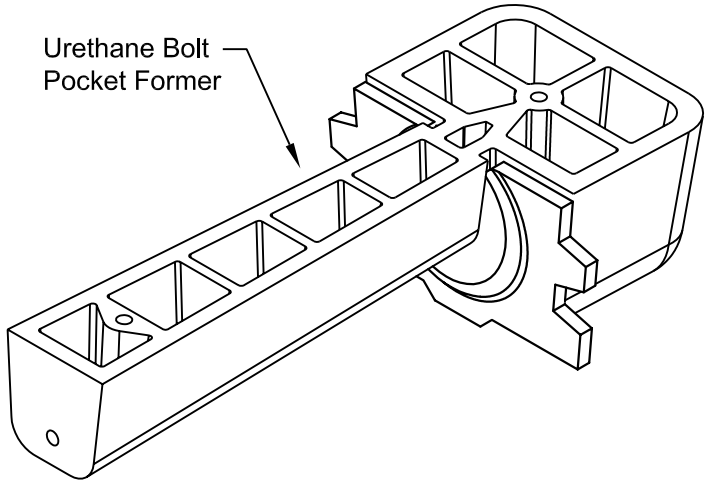

BOLT POCKET PLATE (use with bolt pocket former)

- *1/4" Galvanized Steel Plate Standard, distributes bolt load
- Teeth anchor plate securely in concrete
- Pressed center keeps bolt in position
- **Fits securely into reusable bolt pocket former

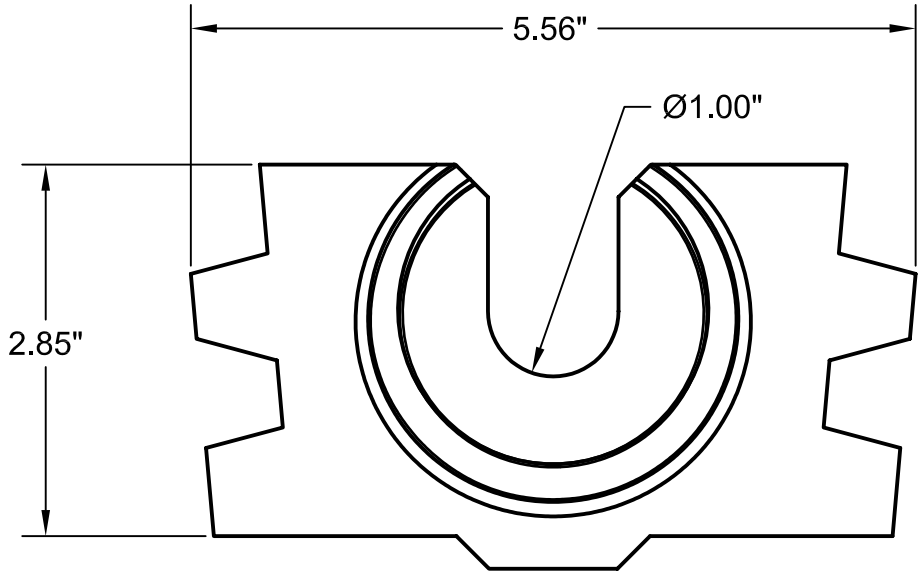

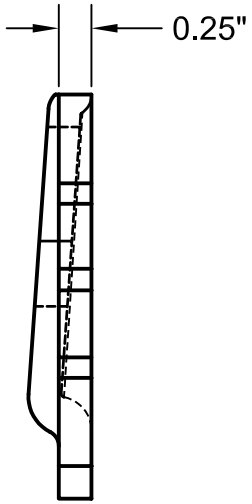

*Plain Steel or Stainless Steel Optional
**Urethane Bolt Pocket Former sold separately (part number 4023)

06/03/04

DAYTON/RICHMOND™ CONCRETE ACCESSORIES

Dowel Bar Splicer System

D-101-A Straight Dowel Bar Splicer DB-SAE, D-102-A 90° Hooked Dowel Bar Splicer, D-103-A 180° Hooked Dowel Bar Splicer, D-104-A Double-Ended Dowel Bar Splicer

The Dayton/Richmond Dowel Bar Splicer is a one-piece unit, integrally forged from ASTM A615 grade 60 deformed rebar material. The splicers are available in #4 through #11 rebar sizes to be used in conjunction with the corresponding size dowel-in to accomplish a mechanical splice designed to achieve 160% of specified yield (full mechanical ultimate).

The splicer can be furnished straight (D-101-A) cut to length, 90° and 180° hooked (D-102-A and D-103-A) and double-ended (D-104-A) in plain or epoxy coated finish. The splicer can also be special-ordered with a reduced diameter washer flange or with the washer flange clipped (in more than one direction, if required) to provide adequate concrete cover, or to avoid interference.

The D-104-A Double-Ended Dowel Bar Splicer is used to establish a direct load path through a concrete section, thus avoiding multiple hooked rebar and eliminating rebar congestion. The double-ended unit can be configured in a “U” shape for special applications.

Bar Size	Thread Size	A	B	C	D	E	Flange Diameter	Minimum P_{ult} Range = 95% F_u Actual or 160% F_y Specified*
#4 [#13]	5/8"–11 UNC	1-1/8"	1/8"	11/16"	55/64"	1"	1-7/8"	19,200 lbs.
#5 [#16]	3/4"–10 UNC	1-9/16"	1/8"	13/16"	1-3/64"	1-1/8"	2-1/16"	29,760 lbs.
#6 [#19]	7/8"–9 UNC	1-11/16"	1/8"	15/16"	1-15/64"	1-1/4"	2-1/4"	42,400 lbs.
#7 [#22]	1"–8 UNC	1-27/32"	1/8"	1-1/16"	1-27/64"	1-3/8"	2-7/16"	57,600 lbs.
#8 [#25]	1-1/8"–8 UN	2-1/16"	1/8"	1-3/16"	1-19/32"	1-1/2"	2-5/8"	75,840 lbs.
#9 [#29]	1-1/4"–8 UN	2-3/16"	1/8"	1-5/16"	1-25/32"	1-5/8"	2-13/16"	96,000 lbs.
#10 [#32]	1-7/16"–8 UN	2-7/16"	1/8"	1-1/2"	2"	1-13/16"	3"	121,920 lbs.
#11 [#36]	1-9/16–8 UN	2-9/16"	1/8"	1-5/8"	2-7/32"	1-15/16"	3-1/4"	149,760 lbs.

*Loads shown based on 160% f_y specified

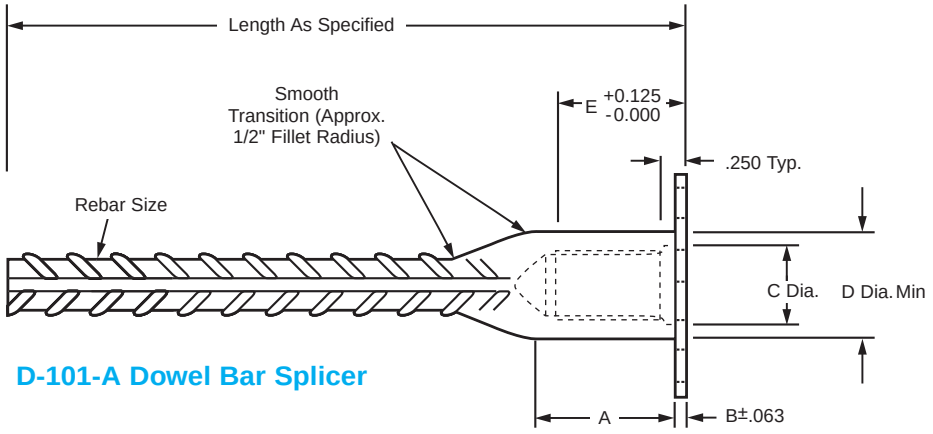

D-101-A Dowel Bar Splicer

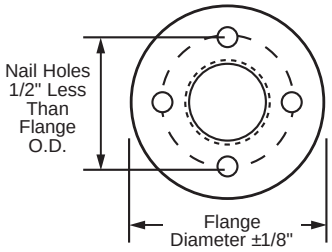

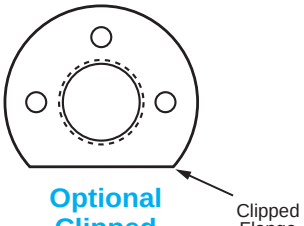

Optional Clipped Flange

Note: No. 4, 5 and 6 splicers, 18", 24" and 36" long will usually have a stamped metal plug to protect threads; all other sizes will have a plastic cap plug.

DAYTON/RICHMOND™ CONCRETE ACCESSORIES

Dowel Bar Splicer System

Specified or Required Dowel Bar				Recommended Dowel Bar Splicer and Dowel-In						
Bar Size	Grade 60 Rebar Loads (lbs.)			System Thread Size*	DB-SAE Bar Size	Dowel-In Bar Size	System Stress Area (min.)	Completed Splice (lbs.)		
	P_y	1.25 P_y	P_{ult}					P_y	1.25 P_y	Minimum P_{ult} Range = 95% F_u Actual or 160% F_y Specified**
#4 [#13]	12,000	15,000	18,000	5/8"-11	#4	#4	.20	12,000	15,000	19,200
#5 [#16]	18,600	23,250	27,900	3/4"-10	#5	#5	.31	18,600	23,250	29,760
#6 [#19]	26,400	33,000	39,600	7/8"-9	#6	#6	.44	26,400	33,000	42,400
#7 [#22]	36,000	45,000	54,000	1"-8	#7	#7	.60	36,000	45,000	57,600
#8 [#25]	47,400	59,250	71,100	1-1/8"-8	#8	#8	.79	47,400	59,250	75,840
#9 [#29]	60,000	75,000	90,000	1-1/4"-8	#9	#9	1.00	60,000	75,000	96,000
#10 [#32]	76,200	95,250	114,000	1-7/16"-8	#10	#10	1.27	76,200	95,250	121,920
#11 [#36]	93,600	117,000	140,400	1-9/16"-8	#11	#11	1.56	93,600	117,000	149,760

P_y=Minimum Yield Strength of bar.
*5/8", 3/4", 7/8" and 1" sizes have UNC Threads. 1-1/8" and larger sizes are equipped with UN Threads.
**Loads shown based on 160% f_y specified.

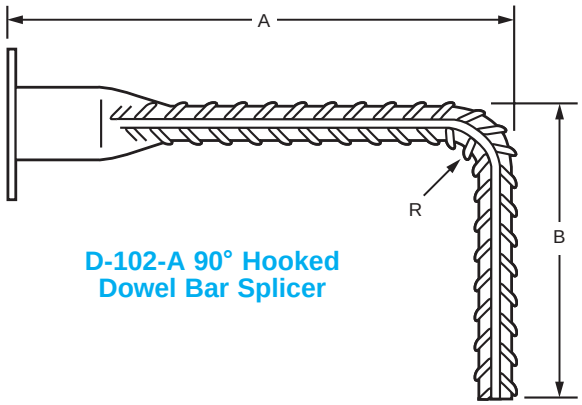

D-102-A 90° Hooked Dowel Bar Splicer

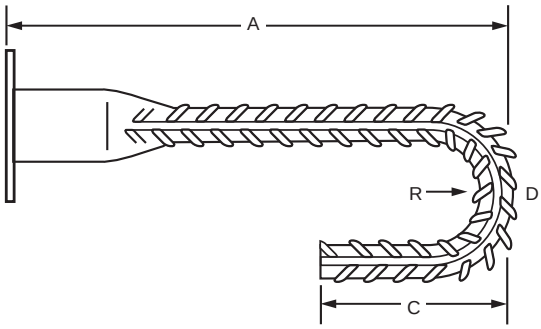

D-103-A 180° Hooked Dowel Bar Splicer

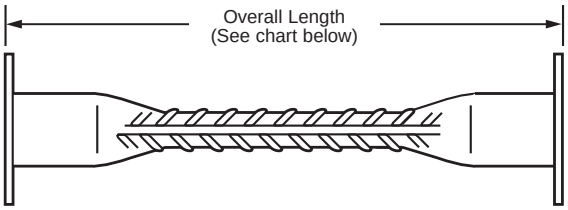

D-104-A Double-Ended Dowel Bar Splicer

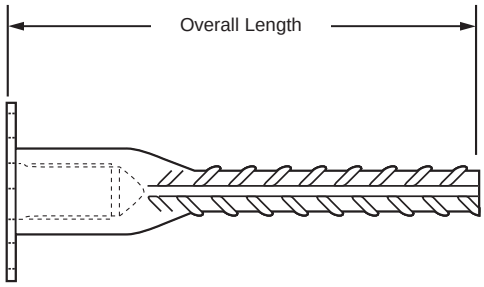

D-101-A Dowel Bar Splicer

D-104-A Double-Ended Min. Lengths		Tolerance Overall Length
#4 [#13]	12" O.A.	+0 - 3/8"
#5 [#16]	12" O.A.	+0 - 3/8"
#6 [#19]	14" O.A.	+0 - 1/2"
#7 [#22]	16" O.A.	+0 - 5/8"
#8 [#25]	16" O.A.	+0 - 3/4"
#9 [#29]	16" O.A.	+0 - 1"
#10 [#32]	16" O.A.	+0 - 1"
#11 [#36]	16" O.A.	+0 - 1"

See D-108 Headed Dowel Bar Splicer on page 17.

To Order:
Specify: (1) quantity, (2) name, (3) bar size (should be equivalent to the rebar being substituted for on the structural drawings), (4) dimensions required.

Example:
600, D-101-A Dowel Bar Splicers, #5 rebar, 36" long.

DAYTON/RICHMOND™ CONCRETE ACCESSORIES

Dowel Bar Splicer System

D-101 Dowel-in, D-102 90° Hooked Dowel-in, D-103 180° Hooked Dowel-in, D-104 Double-Ended Dowel-in

The Dayton/Richmond Dowel-In is available Straight (D-101), 90° and 180° Hooked (D-102 and D-103) and Double-Ended (D-104). Each is manufactured from grade 60 deformed rebar material and is available in rebar sizes #4 through #11 in plain or epoxy coated finish. The threaded end of the Dowel-In is enlarged by forging, before threading, to ensure that the cross-sectional area of the bar is not reduced by the threading operation. This design feature assures full ultimate strength of the rebar. Dowel-ins are configured to facilitate easy installation and can be easily assembled by hand. On larger projects, such as highway paving, a centrifugal chuck on an electric or air-powered drill motor can be employed to speed installation. See the D-49 Magna Jaw on Page 65.

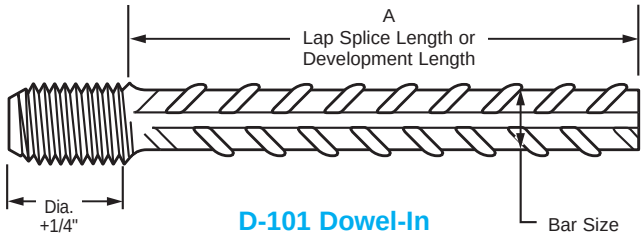

D-101 Dowel-In

To Order:
Specify: (1) quantity, (2) name, (3) bar size (should be equivalent to the rebar being substituted for on the structural drawings), (4) dimensions required (see below).

Example:
600, D-102 90° Hooked Dowel-Ins, #5 rebar, A=14", B=8"

Specified or Required Dowel Bar				Recommended Dowel Bar Splicer and Dowel-In						
Bar Size	Grade 60 Rebar Loads (lbs.)			System Thread Size*	DB-SAE Bar Size	Dowel-In Bar Size	System Stress Area (min.)	Completed Splice (lbs.)		
	P_y	1.25 P_y	P_{ult}					P_y	1.25 P_y	Minimum P_{ult} Range = 95% F_u Actual or 160% F_y Specified**
#4 [#13]	12,000	15,000	18,000	5/8"-11	#4	#4	.20	12,000	15,000	19,200
#5 [#16]	18,600	23,250	27,900	3/4"-10	#5	#5	.31	18,600	23,250	29,760
#6 [#19]	26,400	33,000	39,600	7/8"-9	#6	#6	.44	26,400	33,000	42,400
#7 [#22]	36,000	45,000	54,000	1"-8	#7	#7	.60	36,000	45,000	57,600
#8 [#25]	47,400	59,250	71,100	1-1/8"-8	#8	#8	.79	47,400	59,250	75,840
#9 [#29]	60,000	75,000	90,000	1-1/4"-8	#9	#9	1.00	60,000	75,000	96,000
#10 [#32]	76,200	95,250	114,000	1-7/16"-8	#10	#10	1.27	76,200	95,250	121,920
#11 [#36]	93,600	117,000	140,400	1-9/16"-8	#11	#11	1.56	93,600	117,000	149,760

P_y=Minimum Yield Strength of bar.
*5/8", 3/4", 7/8" and 1" sizes have UNC Threads. 1-1/8" and larger sizes are equipped with UN Threads.
**Loads shown based on 160% f_y specified.

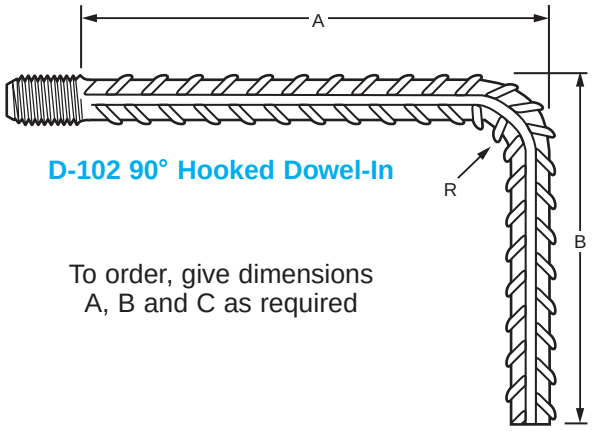

D-102 90° Hooked Dowel-In

To order, give dimensions A, B and C as required

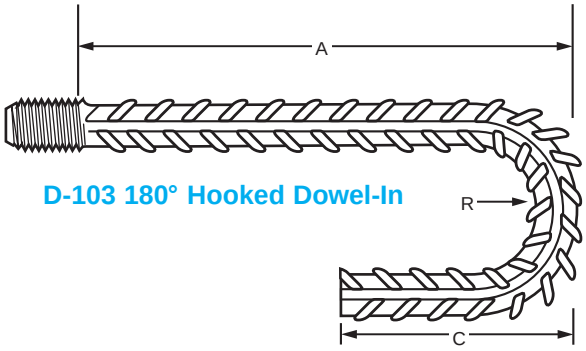

D-103 180° Hooked Dowel-In

See D-108 Headed Dowel-In on page 17.

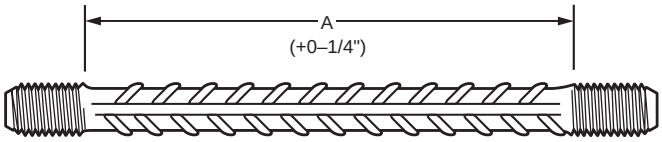

D-104 Double-Ended Dowel-In

DESIGN CALCULATIONS FOR PRECAST CONCRETE RIGID BRIDGE

ROUTE 106 BRIDGE REPLACEMENT
T.H. 61 (KENDALL ROAD)
WOODSTOCK, VT

MILLER CONSTRUCTION INC.

CONCRETE SYSTEMS, INC.
9 COMMERCIAL STREET
HUDSON, NH

CSI Drawing No C22624 - LO1

STATE OF VERMONT
CHRISTOPHER M. VICK
NO. 77928
Structural
LICENSED
PROFESSIONAL ENGINEER

3/1/16

TABLE OF CONTENTS

Section #	Description	Total Pages
1	Summary of Design Information	1
2	Mathcad Calculations: 42.42' x 4.583' Rigid Bridge, 0'-2' Earth Cover, HL93	15
3	STAAD PRO Output: 42.42' x 4.583' Rigid Bridge, 0'-2' Earth Cover, Fixed, HL93 incl. SF & BM Diagrams	47
4	STAAD PRO Output: 42.42' x 4.583' 3 Rigid Bridge, 0'-2' Earth Cover, Spring, HL93 incl. SF & BM Diagrams	47
5	CSI Wing wall 1 Calculations	13
6	CSI Wing wall 2 Calculations	12
7	CSI Wing wall 3 Calculations	12
8	CSI Wing wall 4 Calculations	16
9	Bridge Load Rating	65
	TOTAL PAGES IN SET	228

9 Commercial Street Hudson, New Hampshire 03051 Phone (603) 889-4163
Fax Number: Precast Sales (603) 889-0039
Fax Number: Manhole Design and Engineering (603) 598-1344

Section 1

Summary of Design Information

REFERENCES:

AASHTO LRFD Bridge Design Specifications
ASTM C1504 Standard Specifications for Precast Reinforced Concrete 3 Sided Structures for Culverts, Storm Drains and Sewers
ACI 318 Building Code Requirements for Structural Concrete
NPCA Quality Control Manual for Precast Plants
Plans: Route 106 Bridge replacement T.H. 61 (Kendall Road) Woodstock, VT
Sheet 1 of 50 to 33 of 50
Specifications:

COMPUTER PROGRAMS:

MATHCAD
STAAD PRO
CSI Wing Wall Spreadsheet

DESIGN PARAMETERS:

Concrete:
Design strength f'c = 5000 psi
Unit weight = 150 pcf
Reinforcing:
Yield strength fy = 60,000 psi
Cover to reinforcing = See Drawings

Soil: *Unit weight = 140 pcf*
Lateral earth pressure coefficient (max.) = .50
Lateral earth pressure coefficient (min.) = .25

Earth Cover: *0' to 2'*

Live Load: *HL93*

LRFD METHOD

42 ft x 4.583ft Rigid Bridge
HL93; Earth Cover : 0ft -2ft

Reference Dwg: R22624-LO1

REFERENCES:

1. ASTM C1504 Standard Specification for Precast Concrete 3-Sided Culverts, Storm Drains and Sewers;
2. AASHTO LRFD Bridge Design Specifications
3. Attachment A: STAAD.Pro Computer Output for Culvert; Fixed Support in Global X-Dir. at Joint 2 and Bending Moment & Shear Force Diagrams - HL93
4. Attachment B: STAAD.Pro Computer Output for Culvert; Spring Support (200 kips/ft) in Global X-Dir. at Joint 2 and Bending Moment & Shear Force Diagrams - HL93

DESIGN PARAMETERS:

$\gamma_w := 62.4\frac{lbf}{ft^3}$ unit weight of water

$\gamma_c := 150\frac{lbf}{ft^3}$ unit weight of concrete

$\gamma_e := 140\frac{lbf}{ft^3}$ unit weight of earth

$DE_1 := 0$ ft Depth of earth Cover -Min

$DE_2 := 2.0$ ft Depth of earth Cover -Max

$DE_{ave} := \frac{DE_1 + DE_2}{2} = 1$

$L_T := 10in$ Length of tire contact area -parallel to span

$K_{max} := .5$ max. earth pressure coefficient

$LLDF := 1.0$ factor for distribution of live load with depth of fill

$K_{min} := .25$ min. earth pressure coefficient

Geometry:

$ClearSpan := 42.42ft$ ClearSpan

$ClearRise := 4.583ft$ ClearRise

Member Properties:

$b := 12in$ design section width

$t_{tMin} := 17in$ Min. top slab thickness

$t_{wMin} := 18in$ Min wall thickness

$t_{tMax} := 22in$ Max.top slab thickness at the Intersection with the Wall

$t_{wMax} := 25in$ Max wall thickness

$Span := ClearSpan + t_{wMin} = 43.92ft$

$L_{Section} := 7.5ft$ Section Length

$Rise := ClearRise + t_{tMin} - t_{tMax} = 4.17ft$

Dimension to Calculate Soil Pressure for the Model

$t_{Min} := \frac{ClearSpan + 10ft}{30} = 1.747ft$

Estimate Slab Thickness AASHTO Table 2.5.2.6.3-1

$F_e := 1 + 0.2\frac{DE_{ave} \cdot ft}{ClearSpan + 2t_{wMin}} = 1.004$

Soil-Structure Interaction Factor AASHTO Eqn 12.11.2.2.1-2

$F_{emax} := \min(F_e, 1.15) = 1.004$

9 Commercial Street
Hudson, NH
(800) 342-3374
Fax (603) 598-1344

Dead Load: (DL)

$D_{pav} := F_{emax} \cdot \gamma_e DE_{ave} \cdot ft \cdot 1ft = 140.616 \cdot \frac{lbf}{ft}$ Dead load

Live Load: Design Truck

$F_1 := 8000lbf$ Axle load 1

$F_{23} := 32000lbf$ Axle load 2 & 3

Multiple presence factor $M := 1.2$

$Im := 33(1.0 - 0.125 \cdot DE_1)$ $Im = 33$

Dynamic load allowance $I_i := 1 + \frac{Im}{100}$ $I_i = 1.33$

$I := \max(1., I_i)$ $I = 1.33$

$E_{perp} := 96in + \left(1.44 \cdot \frac{ClearSpan}{12}\right)$ $E_{perp} = 13.09ft$ Distribution - perpendicular to span

$E_{para} := L_T + (LLDF \cdot DE_1 \cdot in)$ $E_{para} = 0.833ft$ Distribution - parallel to span

$D := 6ft$ Wheel spacing across a Design truck

$D1 := 14ft$ Typical Axle spacing of a Design truck

$P1 := \frac{M \cdot I \cdot F_1 \cdot ft}{E_{perp}}$ $P1 = 975.4 \cdot lbf$

$P2 := \frac{M \cdot I \cdot F_{23} \cdot ft}{E_{perp}}$ $P2 = 3.9 \times 10^3 \cdot lbf$

Live Load: Design Tandem

$F_{34} := 25000lbf$ Axle load 3 & 4

Multiple presence factor $M := 1.2$

$D := 6ft$ Wheel spacing across a Design tandem

$P3 := \frac{M \cdot I \cdot F_{34} \cdot ft}{E_{perp}}$ $P3 = 3.048 \times 10^3 \cdot lbf$

$D3 := 4ft$ Distance between Axles of a Design tandem

Live Load: Design Lane load :

Applicable only when Span is greater than 15ft

$W_{10} := 640 \frac{lbf}{ft}$ Design Lane load over 10 ft width

$W_1 := \frac{W_{10}}{10} = 64 \cdot \frac{lbf}{ft}$ Design Lane load per ft run

Lateral Earth Pressure:

$H1 := DE_{ave} \cdot ft + t_{tMax} = 2.833ft$ soil depth at top of wall

$H2 := H1 + Rise = 7ft$ soil depth at bottom of wall

$LEPMIN := K_{min} \cdot \gamma_e \cdot 1ft = 35 \cdot \frac{lbf}{ft^2}$ minimum lateral earth pressure

$LEPMAX := K_{max} \cdot \gamma_e \cdot 1ft = 70 \cdot \frac{lbf}{ft^2}$ maximum lateral earth pressure

Minimum **(EMIN)**

$w_{et} := H1 \cdot LEPMIN = 99.167 \cdot \frac{lbf}{ft}$ top of wall

$w_{eb} := H2 \cdot LEPMIN = 244.988 \cdot \frac{lbf}{ft}$ bottom of wall

Maximum **(EMAX)**

$w_{et} := H1 \cdot LEPMAX = 198.333 \cdot \frac{lbf}{ft}$ top of wall

$w_{eb} := H2 \cdot LEPMAX = 489.977 \cdot \frac{lbf}{ft}$ bottom of wall

Approaching Wheel Load (Surcharge) : (AWL)

$w_a := 4 \cdot ft \cdot \gamma_e \cdot ft \cdot K_{max} = 280 \cdot \frac{lbf}{ft}$ Uniform on wall

Internal Fluid Pressure: (IFP)

$w_{ib} := \gamma_w \cdot ClearRise \cdot 1ft = 285.979 \cdot \frac{lbf}{ft}$ bottom of wall

Design Load Combinations:

The following load combinations are considered:

1. ***SPRING SIZE RATING (Load Cases 500's & 5000's):***
   1.0DL +1.0LL
2. ***DEFLECTION CHECK (Load Cases 600's & 6000's):***
   1.0LL
3. **STRENGTH I**
   For the Maximum Moments & Forces in the Culvert:
   - ***1.3 DL+ 1.75LL + 1.35Emax+1.75AWL - For Max. Outside the Culvert (Negative) Moment in the walls and slab) - Load Cases 100's & 1000's;***
   - ***1.3 DL+ 1.75LL + 1.0Emin+1.0Wins - For Max. Inside of the Culvert (Positive) Moment in the slab -- Load Cases 200's & 2000's.***
4. ***Cracking Load Combinations:***
   - ***1.0 DL+ 1.0LL + 1.0Emax+1.0AWL - For Max. Outside the Culvert (Negative) Moment in the walls and slab) - Load Cases 300's & 3000's;***
   - ***1.0 DL+ 1.0LL + 1.0Emin+1.0 IFP - For Max. Inside of the Culvert (Positive) Moment in the slab - Load Cases 400's & 4000's.***
5. ***Live Load Combinations:***
   - ***1.0LL + 1.0Emax+1.0AWL - For Max. Outside the Culvert (Negative) Moment in the walls and slab) - Load Cases 700 & 7000;***
   - ***1.0LL + 1.0Emin+1.0Wins - For Max. Inside of the Culvert (Positive) Moment in the slab - Load Cases 701 & 7001.***
6. ***Dead Load Combinations:***
   - ***1.0DL - For Max. Outside the Culvert (Negative) Moment in the walls and slab) - Load Cases 800's & 8000's;***

Where,

- ***DL - Dead Load;***
- ***LL - Live Load;***
- ***E - Soil Pressure Load;***
- ***AWL - Approaching Wheel Load (Surcharge);***
- ***Wins - Inside Water Pressure Load.***

42.42ft x 4.583 ft - Rigid Bridge : LRFD Reinforcement Design

DESIGN PARAMETERS

$Span := 42.42ft$ Clear Span $Rise := 4.583ft$ Clear Rise $f_c := 5000psi$ $f_y := 60000psi$

$t_{min} := 17in$ Top Slab thickness (Min) $t_{wMin} := 18in$ Min wall thickness $b_v := 12in$ Width

$t_{max} := 22in$ Top Slab thickness (Max) $t_{wMax} := 25in$ Max wall thickness

STAAD.Pro ANALYSIS RESULTS:

Att. No	X-Dir. Support Conditions kips/ft	Max. Suppt Displ. (In)	SlabNegative (Outs. Face) Moment (ft-k)	Slab Positive (Ins. Face) Moment (ft-k) End span	Slab Positive (Ins. Face) Moment (ft-k) mid span
"A":	HL93 Fixed	$d := 0$	$M_{uSNf} := 127.63 \cdot ft \cdot kip$	$M_{uSPef} := 9.23 \cdot ft \cdot kip$	$M_{uSPf} := 73.89 \cdot ft \cdot kip$
"B":	HL93 Spring	$d := 0.815in$	$M_{uSNs} := 74.43 \cdot ft \cdot kip$	$M_{uSPes} := 29.75 \cdot ft \cdot kip$	$M_{uSPs} := 139.28 \cdot ft \cdot kip$

Wall Negative (Outs. Face) Moment (ft-k)	Slab Shear (k) (at the ends)	Slab Shear (k) (mid span)	Wall Shear (k) @ 0.9d
$M_{uWf} := 135.19 \cdot ft \cdot kip$	$V_{uSef} := 19.77kip$	$V_{uSf} := 15.14 \cdot kip$	$V_{uWf} := 30.02kip$
$M_{uWs} := 81.20 \cdot ft \cdot kip$	$V_{uSes} := 21.16kip$	$V_{uSs} := 15.14 \cdot kip$	$V_{uWs} := 18.58kip$

$M_{uSN} := max(M_{uSNf}, M_{uSNs})$ $M_{uSN} = 1.28 \times 10^5 \cdot ft \cdot lbf$ Max Negative Moment in Top Slab

$M_{uSPe} := max(M_{uSPef}, M_{uSPes})$ $M_{uSPe} = 2.97 \times 10^4 \cdot ft \cdot lbf$ Max Positive Moment in Top Slab (End Span)

$M_{uSP} := max(M_{uSPf}, M_{uSPs})$ $M_{uSP} = 1.39 \times 10^5 \cdot ft \cdot lbf$ Max Positive Moment in Top Slab

$M_{uW} := max(M_{uWf}, M_{uWs})$ $M_{uW} = 1.35 \times 10^5 \cdot ft \cdot lbf$ Max Negative Moment in Wall

$V_{uSe} := max(V_{uSef}, V_{uSes})$ $V_{uSe} = 21.16 \cdot kip$ Max Shear in Top Slab (End Span)

$V_{uS} := max(V_{uSf}, V_{uSs})$ $V_{uS} = 15.14 \cdot kip$ Max Shear in Top Slab

$V_{uW} := max(V_{uWf}, V_{uWs})$ $V_{uW} = 30.02 \cdot kip$ Max Shear in Wall Junction

TOP SLAB, TOP REINFORCEMENT; End span
Shear Capacity

$t_{max} = 22 \cdot in$ $\quad c := 2.5in$ rebar clear distance $\quad d_b := 0.875in$ bar diameter

$f_c := 5 \quad ksi$

$d := t_{max} - c - \frac{d_b}{2}$ $\quad d = 19.06 \cdot in$ $\quad \beta := 2$

$d_{v1} := 0.9 \cdot d$ $\quad d_{v1} = 17.16 \cdot in$

$d_{v2} := 0.72 \cdot t_{max}$ $\quad d_{v2} = 15.84 \cdot in$ $\quad d_v := max(d_{v1}, d_{v2})$

$\phi V_c := .9 \cdot .0316 \cdot \beta \cdot \sqrt{f_c} \cdot ksi \cdot b_v \cdot d_v$

$\boxed{\phi V_c = 2.62 \times 10^4 \cdot lbf}$

$V_{uSe} = 21.16 \cdot kip$ $\quad if(\phi V_c > V_{uS}, "OK", "NG") = "OK"$

Minimum Reinforcement:

Check Minimum Reinforcement, Ratio of Reinforcement Area to GROSS Concrete Area:

***** 3-Sided Culvert - AASHTO 12.14.5.8**
Ast/Agross = 0.002:
Primary reinforcement in the direction of the span, at all cross sections subject to flexural tension, at the inside face of walls, and in each direction at the top of the slabs if cover <2ft.;

$A_{sMin} := 12in \cdot t_{max} \cdot 0.002$ $\quad A_{sMin} = 0.528 \cdot in^2$

TOP SLAB, TOP REINFORCEMENT; End Span
- Use the same Reinforcement as in the Wall;
Negative (Outside Face) Moment:

$c = 2.5 \cdot in$ rebar clear distance $\quad d := t_{max} - c - \frac{d_b}{2}$ $\quad d = 19.06 \cdot in$

$A_s := 1.60in^2$ **#7 @ 4.5"** $\quad f_c := 5000 \quad psi$ $\quad SpacingUsed := 4.5$

$f_y := 60000$ $\quad a := \frac{A_s \cdot f_y}{.85 \cdot f_c \cdot 12in}$ $\quad a = 1.882 \cdot in$ $\quad f_y := 60000psi$

$\phi M_n := .95 \cdot A_s \cdot f_y \cdot \left(d - \frac{a}{2}\right)$ $\quad \boxed{\phi M_n = 1.377 \times 10^5 \cdot ft \cdot lbf}$ Negative Moment Capacity

$M_{uSN} = 1.28 \times 10^5 \cdot ft \cdot lbf$ $\quad if(\phi M_n > M_{uSN}, "OK", "NG") = "OK"$

AASHTO Crack Control: End Span - Top Slab (Critical Ms)

***** Culvert - AASHTO 5.7.3.4 & 12.14.5.7**

$M_s := 84290 \cdot ft \cdot lbf$ Service Load Moment

$N_s := 23530 lbf$ Axial thrust at Service limit state - (Value Concurrent with Ms)

$e := \frac{M_s}{N_s} + \left(d - \frac{t_{max}}{2}\right)$ $e = 51.05 \cdot in$

$j := 0.74 + 0.1\left(\frac{e}{d}\right)$ $j = 1.01$ $j_{max} := .9$ $j1 := min(j, j_{max})$ $j1 = 0.9$

$i := \frac{1}{1 - \frac{j \cdot d}{e}}$

$f_s := \frac{M_s + N_s \cdot \left(d - \frac{t_{max}}{2}\right)}{A_s \cdot j1 \cdot i \cdot d}$ $f_s = 27.29 \cdot ksi$ Reinforcement stress under service load condition

$d_c := c + \frac{d_b}{2}$ $d_c = 2.94 \cdot in$

$\gamma_e := 0.75$ Class 2 Exposure factor

$\beta_s := 1 + \frac{d_c}{0.7(t_{max} - d_c)}$ $\beta_s = 1.22$

$SpacingUsed = 4.5$

$Spacing := \frac{700 \cdot \gamma_e}{\beta_s \cdot \frac{f_s}{ksi}} - 2\frac{d_c}{in}$ $Spacing = 9.89$

$if(Spacing > SpacingUsed, "OK", "NG") = "OK"$

AASHTO Crack Control: End Span - Top Slab (Critical Ns)

***** Culvert - AASHTO 5.7.3.4 & 12.14.5.7**

$N_s := 24600 lbf$ Axial thrust at Service limit state

$M_s := 62860 \cdot ft \cdot lbf$ Service Load Moment - (Value Concurrent with Ns)

$e := \frac{M_s}{N_s} + \left(d - \frac{t_{max}}{2}\right)$ $e = 38.73 \cdot in$

$j := 0.74 + 0.1\left(\frac{e}{d}\right)$ $j = 0.94$ $j_{max} := .9$ $j1 := min(j, j_{max})$ $j1 = 0.9$

$i := \frac{1}{1 - \frac{j \cdot d}{e}}$

$f_s := \frac{M_s + N_s \cdot \left(d - \frac{t_{max}}{2}\right)}{A_s \cdot j1 \cdot i \cdot d}$ $\boxed{f_s = 18.59 \cdot ksi}$ Reinforcement stress under service load condition

$d_c := c + \frac{d_b}{2}$ $d_c = 2.94 \cdot in$

$\gamma_e := 0.75$ Class 2 Exposure factor

$\beta_s := 1 + \frac{d_c}{0.7(t_{max} - d_c)}$ $\beta_s = 1.22$

$SpacingUsed = 4.5$

$Spacing := \frac{700 \cdot \gamma_e}{\beta_s \cdot \frac{f_s}{ksi}} - 2\frac{d_c}{in}$ $Spacing = 17.27$

$if\ (Spacing > SpacingUsed, "OK", "NG") = "OK"$

TOP SLAB, BOTTOM REINFORCEMENT; Mid span

Shear Capacity

$t_{min} = 17 \cdot in$ $c := 1.5in$ rebar clear distance $d_b := 1.125in$ bar diameter

$f_c := 5\ ksi$

$d := t_{min} - c - \frac{d_b}{2}$ $d = 14.94 \cdot in$ $\beta := 2$

$d_{v1} := 0.9 \cdot d$ $d_{v1} = 13.44 \cdot in$

$d_{v2} := 0.72 \cdot t_{min}$ $d_{v2} = 12.24 \cdot in$ $d_v := max(d_{v1}, d_{v2})$

$\phi V_c := .9 \cdot .0316 \cdot \beta \cdot \sqrt{f_c} \cdot ksi \cdot b_v \cdot d_v$ $\boxed{\phi V_c = 2.05 \times 10^4 \cdot lbf}$

$V_{uS} = 15.14 \cdot kip$ $if\left(\phi V_c > V_{uS}, "OK", "NG"\right) = "OK"$

Minimum Reinforcement:

Check Minimum Reinforcement, Ratio of Reinforcement Area to GROSS Concrete Area:

***** 3-Sided Culvert - AASHTO 12.14.5.8**
Ast/Agross = 0.002:
Primary reinforcement in the direction of the span, at all cross sections subject to flexural tension, at the inside face of walls, and in each direction at the top of the slabs if cover <2ft.;

$A_{sMin} := 12in \cdot t_{min} \cdot 0.002$ $A_{sMin} = 0.408 \cdot in^2$

Positive (Inside Face) Moment:

$c = 1.5 \cdot in$ rebar clear distance $d := t_{min} - c - \frac{d_b}{2}$ $d = 14.94 \cdot in$

$A_s := 2.4in^2$ $SpacingUsed := 5$ **#9 @ 5"** $f_c := 5000\ psi$

$f_y := 60000$ $a := \frac{A_s \cdot f_y}{.85 \cdot f_c \cdot 12in}$ $a = 2.824 \cdot in$ $f_y := 60000psi$

$\phi M_n := .95 \cdot A_s \cdot f_y \cdot \left(d - \frac{a}{2}\right)$ $\boxed{\phi M_n = 1.542 \times 10^5 \cdot ft \cdot lbf}$ Positive Moment Capacity

$M_{uSP} = 1.39 \times 10^5 \cdot ft \cdot lbf$ $if\left(\phi M_n > M_{uSP}, \text{"OK"}, \text{"NG"}\right) = \text{"OK"}$

AASHTO Crack Control: Mid Span - Top Slab (Critical Ms)

***** Culvert - AASHTO 5.7.3.4 & 12.14.5.7**

$M_s := 91380 \cdot ft \cdot lbf$ Service Load Moment

$N_s := 13580lbf$ Axial thrust at Service limit state - (Value Concurrent with Ms)

$e := \frac{M_s}{N_s} + \left(d - \frac{t_{min}}{2}\right)$ $e = 87.19 \cdot in$

$j := 0.74 + 0.1\left(\frac{e}{d}\right)$ $j = 1.32$ $j_{max} := .9$ $j1 := min\left(j, j_{max}\right)$ $j1 = 0.9$

$i := \frac{1}{1 - \frac{j \cdot d}{e}}$

$f_s := \frac{M_s + N_s \cdot \left(d - \frac{t_{min}}{2}\right)}{A_s \cdot j1 \cdot i \cdot d}$ $\boxed{f_s = 28.37 \cdot ksi}$ Reinforcement stress under service load condition

$d_c := c + \frac{d_b}{2}$ $d_c = 2.06 \cdot in$

$\gamma_e := 0.75$ Class 2 Exposure factor

$\beta_s := 1 + \frac{d_c}{0.7\left(t_{min} - d_c\right)}$ $\beta_s = 1.2$ $SpacingUsed = 5$

$Spacing := \frac{700 \cdot \gamma_e}{\beta_s \cdot \frac{f_s}{ksi}} - 2\frac{d_c}{in}$ $Spacing = 11.33$ $if\left(Spacing > SpacingUsed, \text{"OK"}, \text{"NG"}\right) = \text{"OK"}$

AASHTO Crack Control: Mid Span - Top Slab (Critical Ns)

***** Culvert - AASHTO 5.7.3.4 & 12.14.5.7**

$N_s := 23080lbf$ Axial thrust at Service limit state

$M_s := 39060 \cdot ft \cdot lbf$ Service Load Moment- (Value Concurrent with Ns)

$e := \frac{M_s}{N_s} + \left(d - \frac{t_{min}}{2}\right)$ $e = 26.75 \cdot in$

$j := 0.74 + 0.1\left(\frac{e}{d}\right)$ $j = 0.92$ $j_{max} := .9$ $j1 := min(j, j_{max})$ $j1 = 0.9$

$i := \frac{1}{1 - \frac{j \cdot d}{e}}$

$f_s := \frac{M_s + N_s \cdot \left(d - \frac{t_{min}}{2}\right)}{A_s \cdot j1 \cdot i \cdot d}$ $f_s = 9.31 \cdot ksi$ Reinforcement stress under service load condition

$d_c := c + \frac{d_b}{2}$ $d_c = 2.06 \cdot in$

$\gamma_e := 0.75$ Class 2 Exposure factor

$\beta_s := 1 + \frac{d_c}{0.7(t_{min} - d_c)}$ $\beta_s = 1.2$

$Spacing := \frac{700 \cdot \gamma_e}{\beta_s \cdot \frac{f_s}{ksi}} - 2\frac{d_c}{in}$ $Spacing = 42.97$ $if(Spacing > SpacingUsed, "OK", "NG") = "OK"$

Top Slab: Bottom Distribution Reinforcement: Mid Span

***** - AASHTO 9.7.3.2;**

$C := 2.0ft$ Distribution Steel is required;

$Ws := Span$ $Ws = 42.42 \cdot ft$ $A_s = 2.4 \cdot in^2$

Bottom Steel Req'd:

$P_{sd} := \frac{100}{Ws^{.5}} \cdot ft^{.5}$ $P_{sd} = 15$ $P_{max} := 50$ If the main reinforcement parallel to the traffic;

$P := min(P_{sd}, P_{max})$

$A_{sd} := \frac{P}{100} \cdot A_s$ $A_{sd} = 0.368 \cdot in^2$ **#5 @ 10"**

TOP SLAB, BOTTOM REINFORCEMENT; End Span :

Shear Capacity

$c := 1.5in$ rebar clear distance $d_b := 0.875in$ bar diameter

$f_c := 5 \quad ksi$ $d := t_{max} - c - \frac{d_b}{2}$ $d = 14.94 \cdot in$ $\beta := 2$

$d_{v1} := 0.9 \cdot d$ $d_{v1} = 18.06 \cdot in$

$d_{v2} := 0.72 \cdot t_{max}$ $d_{v2} = 15.84 \cdot in$ $d_v := max(d_{v1}, d_{v2})$

$\phi V_c := .9 \cdot .0316 \cdot \beta \cdot \sqrt{f_c} \cdot ksi \cdot b_v \cdot d_v$ $\boxed{\phi V_c = 2.756 \times 10^4 \cdot lbf}$

$V_{uSe} = 21.16 \cdot kip$ $if(\phi V_c > V_{uSe}, "OK", "NG") = "OK"$

Minimum Reinforcement:

Check Minimum Reinforcement, Ratio of Reinforcement Area to GROSS Concrete Area:

***** 3-Sided Culvert - AASHTO 12.14.5.8**
Ast/Agross = 0.002:
Primary reinforcement in the direction of the span, at all cross sections subject to flexural tension, at the inside face of walls, and in each direction at the top of the slabs if cover <2ft.;

$A_{sMin} := 12in \cdot \left(\frac{t_{max} + t_{min}}{2}\right) \cdot 0.002$ $A_{sMin} = 0.468 \cdot in^2$

Positive (Inside Face) Moment:

$d := \frac{t_{max} + t_{min}}{2} - c - \frac{d_b}{2} = 17.56 \cdot in$

$A_s := 1.44in^2$ $SpacingUsed := 5$ $f_c := 5000 \quad psi$ **#7 @ 5"**

$f_y := 60000$ $a := \frac{A_s \cdot f_y}{.85 \cdot f_c \cdot 12in}$ $a = 1.694 \cdot in$ $f_y := 60000psi$

$\phi M_n := .95 \cdot A_s \cdot f_y \cdot \left(d - \frac{a}{2}\right)$ $\boxed{\phi M_n = 1.143 \times 10^5 \cdot ft \cdot lbf}$ Positive Moment Capacity

$M_{uSPe} = 2.97 \times 10^4 \cdot ft \cdot lbf$ $if(\phi M_n > M_{uSPe}, "OK", "NG") = "OK"$

AASHTO Crack Control: End Span - Top Slab (Critical Ms)

***** Culvert - AASHTO 5.7.3.4 & 12.14.5.7**

$M_s := 50410 \cdot ft \cdot lbf$ Service Load Moment

$N_s := 12440 lbf$ Axial thrust at Service limit state - (Value Concurrent with Ms)

$e := \frac{M_s}{N_s} + \left(d - \frac{t_{max} + t_{min}}{4}\right)$ $e = 56.44 \cdot in$

$j := 0.74 + 0.1\left(\frac{e}{d}\right)$ $j = 1.06$ $j_{max} := .9$ $j1 := min(j, j_{max})$ $j1 = 0.9$

$i := \frac{1}{1 - \frac{j \cdot d}{e}}$

$f_s := \frac{M_s + N_s \cdot \left(d - \frac{t_{max} + t_{min}}{4}\right)}{A_s \cdot j1 \cdot i \cdot d}$ $f_s = 20.66 \cdot ksi$ Reinforcement stress under service load condition

$d_c := c + \frac{d_b}{2}$ $d_c = 1.94 \cdot in$

$\gamma_e := 0.75$ Class 2 Exposure factor

$\beta_s := 1 + \frac{d_c}{0.7\left(\frac{t_{max} + t_{min}}{2} - d_c\right)}$ $\beta_s = 1.16$ $SpacingUsed = 5$

$Spacing := \frac{700 \cdot \gamma_e}{\beta_s \cdot \frac{f_s}{ksi}} - 2\frac{d_c}{in}$ $Spacing = 18.08$ $if(Spacing > SpacingUsed, "OK", "NG") = "OK"$

AASHTO Crack Control: End Span - Top Slab (Critical Ns)

***** Culvert - AASHTO 5.7.3.4 & 12.14.5.7**

$N_s := 16460 lbf$ Service Load Moment

$M_s := 39480 \cdot ft \cdot lbf$ Axial thrust at Service limit state - (Value Concurrent with Ns)

$e := \frac{M_s}{N_s} + \left(d - \frac{t_{max} + t_{min}}{4}\right)$ $e = 36.6 \cdot in$

$j := 0.74 + 0.1\left(\frac{e}{d}\right)$ $j = 0.95$ $j_{max} := .9$ $j1 := min(j, j_{max})$ $j1 = 0.9$

$$i := \frac{1}{1 - \frac{j \cdot d}{e}}$$

$$f_s := \frac{M_s + N_s \cdot \left(d - \frac{t_{max} + t_{min}}{4}\right)}{A_s \cdot j1 \cdot i \cdot d}$$

$f_s = 14.42 \cdot ksi$ Reinforcement stress under service load condition

$$d_c := c + \frac{d_b}{2}$$

$d_c = 1.94 \cdot in$

$\gamma_e := 0.75$ Class 2 Exposure factor

$$\beta_s := 1 + \frac{d_c}{0.7\left(\frac{t_{max} + t_{min}}{2} - d_c\right)}$$

$\beta_s = 1.16$

$$Spacing := \frac{700 \cdot \gamma_e}{\beta_s \cdot \frac{f_s}{ksi}} - 2\frac{d_c}{in}$$

$Spacing = 27.58$ $\quad$ $if\,(Spacing > SpacingUsed, \text{"OK"}, \text{"NG"}) = \text{"OK"}$

Walls: Members 1 & 2
Shear Capacity

$t_{wMax} = 25 \cdot in$ $\quad$ $c := 2in$ rebar clear distance $\quad$ $d_b := 0.875in$ bar diameter

$f_c := 5 \quad ksi$

$$d := t_{wMax} - c - \frac{d_b}{2}$$

$d = 22.56 \cdot in$ $\quad$ $\beta := 2$

$d_{v1} := 0.9 \cdot d$ $\quad$ $d_{v1} = 20.31 \cdot in$

$d_{v2} := 0.72 \cdot t_{wMax}$ $\quad$ $d_{v2} = 18 \cdot in$ $\quad$ $d_v := max(d_{v1}, d_{v2})$

$\phi V_c := 0.9 \cdot .0316 \cdot \beta \cdot \sqrt{f_c} \cdot ksi \cdot b_v \cdot d_v$ $\quad$ $\phi V_c = 3.1 \times 10^4 \cdot lbf$ $\quad$ $V_{uW} = 30.02 \cdot kip$

$if\left(\phi V_c > V_{uW}, \text{"OK"}, \text{"NG see futher analysis below"}\right) = \text{"OK"}$

Minimum Reinforcement:

Check Minimum Reinforcement, Ratio of Reinforcement Area to GROSS Concrete Area:

***** 3-Sided Culvert - AASHTO 12.14.5.8**
Ast/Agross = 0.002:
Primary reinforcement in the direction of the span, at all cross sections subject to flexural tension, at the inside face of walls, and in each direction at the top of the slabs if cover <2ft.;

$A_{sMin} := 12in \cdot (t_{wMax} 0.002)$ $\quad$ $A_{sMin} = 0.6 \cdot in^2$

Negative (Outside Face) Moment
(Use the Same Reinforcement as in Top Slab:

rebar clear distance $d := t_{wMax} - c - \frac{d_b}{2}$ $d = 22.56 \cdot in$

$A_s := 1.60 in^2$ **#7 @ 4.5"** $f_c := 5000\ psi$ $SpacingUsed := 4.5$

$f_y := 60000$ $a := \frac{A_s \cdot f_y}{.85 \cdot f_c \cdot 12in}$ $a = 1.882 \cdot in$ $f_y := 60000psi$

$\phi M_n := .95 \cdot A_s \cdot f_y \cdot \left(d - \frac{a}{2}\right)$ $\boxed{\phi M_n = 1.643 \times 10^5 \cdot ft \cdot lbf}$ Negative Moment Capacity

$M_{uW} = 1.35 \times 10^5 \cdot ft \cdot lbf$ $if\left(\phi M_n > M_{uW}, "OK", "NG"\right) = "OK"$

AASHTO Crack Control: Wall (Critical Ms)

***** Culvert - AASHTO 5.7.3.4 & 12.14.5.7**

$M_s := 89360 \cdot ft \cdot lbf$ Service Load Moment

$N_s := 16610 lbf$ Axial thrust at Service limit state - (Value Concurrent with Ms)

$e := \frac{M_s}{N_s} + \left(d - \frac{t_{wMax}}{2}\right)$ $e = 74.62 \cdot in$

$j := 0.74 + 0.1\left(\frac{e}{d}\right)$ $j = 1.07$ $j_{max} := .9$ $j1 := min\left(j, j_{max}\right)$ $j1 = 0.9$

$i := \frac{1}{1 - \frac{j \cdot d}{e}}$

$f_s := \frac{M_s + N_s \cdot \left(d - \frac{t_{wMax}}{2}\right)}{A_s \cdot j1 \cdot i \cdot d}$ $\boxed{f_s = 25.8 \cdot ksi}$ Reinforcement stress under service load condition

$d_c := c + \frac{d_b}{2}$ $d_c = 2.44 \cdot in$

$\gamma_e := 0.75$ Class 2 Exposure factor

$\beta_s := 1 + \frac{d_c}{0.7\left(t_{wMax} - d_c\right)}$ $\beta_s = 1.15$ $SpacingUsed = 4.5$

Negative (Outside Face) Moment
(Use the Same Reinforcement as in Top Slab:

rebar clear distance $d := t_{wMax} - c - \frac{d_b}{2}$ $d = 22.56 \cdot in$

$A_s := 1.60 in^2$ **#7 @ 4.5"** $f_c := 5000\ psi$ $SpacingUsed := 4.5$

$f_y := 60000$ $a := \frac{A_s \cdot f_y}{.85 \cdot f_c \cdot 12in}$ $a = 1.882 \cdot in$ $f_y := 60000psi$

$\phi M_n := .95 \cdot A_s \cdot f_y \cdot \left(d - \frac{a}{2}\right)$ $\boxed{\phi M_n = 1.643 \times 10^5 \cdot ft \cdot lbf}$ Negative Moment Capacity

$M_{uW} = 1.35 \times 10^5 \cdot ft \cdot lbf$ $if\left(\phi M_n > M_{uW}, "OK", "NG"\right) = "OK"$

AASHTO Crack Control: Wall (Critical Ms)

***** Culvert - AASHTO 5.7.3.4 & 12.14.5.7**

$M_s := 89360 \cdot ft \cdot lbf$ Service Load Moment

$N_s := 16610 lbf$ Axial thrust at Service limit state - (Value Concurrent with Ms)

$e := \frac{M_s}{N_s} + \left(d - \frac{t_{wMax}}{2}\right)$ $e = 74.62 \cdot in$

$j := 0.74 + 0.1\left(\frac{e}{d}\right)$ $j = 1.07$ $j_{max} := .9$ $j1 := min\left(j, j_{max}\right)$ $j1 = 0.9$

$i := \frac{1}{1 - \frac{j \cdot d}{e}}$

$f_s := \frac{M_s + N_s \cdot \left(d - \frac{t_{wMax}}{2}\right)}{A_s \cdot j1 \cdot i \cdot d}$ $\boxed{f_s = 25.8 \cdot ksi}$ Reinforcement stress under service load condition

$d_c := c + \frac{d_b}{2}$ $d_c = 2.44 \cdot in$

$\gamma_e := 0.75$ Class 2 Exposure factor

$\beta_s := 1 + \frac{d_c}{0.7\left(t_{wMax} - d_c\right)}$ $\beta_s = 1.15$ $SpacingUsed = 4.5$

$Spacing := \frac{700 \cdot \gamma_e}{\beta_s \cdot \frac{f_s}{ksi}} - 2\frac{d_c}{in}$ $\quad Spacing = 12.75$ $\quad if(Spacing > SpacingUsed, "OK", "NG") = "OK"$

AASHTO Crack Control: Wall (Critical Ns)

***** Culvert - AASHTO 5.7.3.4 & 12.14.5.7**

$N_s := 18700 lbf$ Axial thrust at Service limit state

$M_s := 77370 \cdot ft \cdot lbf$ Service Load Moment -(Value Concurrent with Ns)

$e := \frac{M_s}{N_s} + \left(d - \frac{t_{wMax}}{2}\right)$ $\quad e = 59.71 \cdot in$

$j := 0.74 + 0.1\left(\frac{e}{d}\right)$ $\quad j = 1$ $\quad j_{max} := .9$ $\quad j1 := min(j, j_{max})$ $\quad j1 = 0.9$

$i := \frac{1}{1 - \frac{j \cdot d}{e}}$

$f_s := \frac{M_s + N_s \cdot \left(d - \frac{t_{wMax}}{2}\right)}{A_s \cdot j1 \cdot i \cdot d}$ $\quad f_s = 21.32 \cdot ksi$ Reinforcement stress under service load condition

$d_c := c + \frac{d_b}{2}$ $\quad d_c = 2.44 \cdot in$

$\gamma_e := 0.75$ Class 2 Exposure factor

$\beta_s := 1 + \frac{d_c}{0.7(t_{wMax} - d_c)}$ $\quad \beta_s = 1.15$

$Spacing := \frac{700 \cdot \gamma_e}{\beta_s \cdot \frac{f_s}{ksi}} - 2\frac{d_c}{in}$ $\quad Spacing = 16.46$ $\quad if(Spacing > SpacingUsed, "OK", "NG") = "OK"$

Shear Capacity : Recalculated

NOT APPLICABLE

using (2nd shear method) equation 5.14.5.3-1

$t_{wMax} = 25 \cdot in$ $\quad c := 1.5in$ rebar clear distance $\quad d_b = 0.88 \cdot in$ bar diameter

$f_c := 5 \ ksi$ $\quad d := t_{wMax} - c - \frac{d_b}{2}$ $\quad d = 23.06 \cdot in$

$\rho := \frac{V_{uW} \cdot d}{M_{uW}}$ $\rho = 0.43$ $\rho_{max} := 1.0$ $\rho 1 := min(\rho, \rho_{max})$ $\rho 1 = 0.43$

$\phi V_{c1} := 0.9 \cdot \left[0.0676 \cdot \sqrt{f_c} + \left(4.6 \cdot \frac{A_s}{b_v \cdot d} \cdot \rho 1 \right) \right] \cdot b_v \cdot d \cdot ksi$ $\phi V_{c1} = 4.048 \times 10^4 \cdot lbf$

$\phi V_{c2} := .9 \cdot 0.126 \cdot \sqrt{f_c} \cdot ksi \cdot b_v \cdot d$ $\phi V_{c2} = 7.018 \times 10^4 \cdot lbf$

$if(V_{uW} < \phi V_{c1} < \phi V_{c2}, "OK", "NG") = "OK"$

Inside Wall Face Vertical Reinforcement;

$A_{sMin} := 12in \cdot \frac{t_{wMax} + t_{wMin}}{2} \cdot 0.002$ $A_{sMin} = 0.516 \cdot in^2$ Use #5 @ 7in ;

Inside Wall Face Horizontal Reinforcement;

$A_{st} := 12in \cdot \frac{t_{wMax} + t_{wMin}}{4} \cdot 0.002$ $A_{st} = 0.258 \cdot in^2$ Use #4 @ 9in ;

Calculate a Cut Off Point:-

Per Moment Envelope Diagram, top Reinforcement is not req'd at a distance of 13.0ft from Culvert Inner corner.

$L_{CutOff} := 13.0ft$ $d_b = 0.88 \cdot in$ $Span = 42.42 \cdot ft$

Use Max. from a1, a2 & a3 (Refer to Section 1.2.3):

$a1 := d$ $a1 = 23.06 \cdot in$ $a2 := 15 \cdot d_b$ $a2 = 13.13 \cdot in$ $a3 := \frac{Span}{20}$ $a3 = 25.45 \cdot in$

$a := max(a1, a2, a3)$

$L_{Bar} := L_{CutOff} + a$ $L_{Bar} = 15.12 \cdot ft$ **Cut #7 Bars (top Reinforcement) @ a distance of LBar from the culvert Inner Corner.**

CHECK DEFLECTION:

Max. Vertical Displacement at Joint 4 from the Load Case #600 (1.0LL):

$Displ_1 := 0.19in$ **- Fixed Support in Global X-Dir. at Joint 5 - HL 93**

$Displ_2 := 0.61in$ **- Spring Support in Global X-Dir. at Joint 5 - HL 93**

$Displ := max(Displ_1, Displ_2)$ $Displ = 0.61 \cdot in$

Allowable Displacement: 1/800 of Span Length

$AllowDispl := \frac{Span}{800}$ $AllowDispl = 0.64 \cdot in$ $if(AllowDispl > Displ, "OK", "NG") = "OK"$

Section 3
STAAD PRO Output: 42.42’ x 4.583’ Rigid Bridge, 0’-2’ Earth Cover, Fixed HL93 incl. SF & BM Diagrams

```
****************************************************
*                                                  *
*           STAAD.Pro V8i SELECTseries5            *
*           Version  20.07.10.65                   *
*           Proprietary Program of                 *
*           Bentley Systems, Inc.                  *
*           Date=    MAR  1, 2016                  *
*           Time=    10:40: 5                      *
*                                                  *
*      USER ID:                                    *
****************************************************
```

A

```
     1. STAAD SPACE
INPUT FILE: 42.42ft x 5ft-HL93-Fixed.STD
     2. START JOB INFORMATION
     3. ENGINEER DATE 12/22/15
     4. ENGINEER NAME BK
     5. END JOB INFORMATION
     6. INPUT WIDTH 79
     7. UNIT FEET KIP
     8. JOINT COORDINATES
     9. 1 -21.96 0 0; 2 21.96 0 0; 3 -21.96 5.583 0; 4 -12 5.583 0; 5 0 5.583 0
    10. 6 12 5.583 0; 7 21.96 5.583 0
    11. MEMBER INCIDENCES
    12. 1 1 3; 2 2 7; 3 3 4; 4 4 5; 5 6 5; 6 7 6
    13. DEFINE MATERIAL START
    14. ISOTROPIC CONCRETE5000
    15. E 580390
    16. POISSON 0.17
    17. DENSITY 0.15
    18. ALPHA 5.5E-006
    19. DAMP 0.05
    20. ISOTROPIC STEEL
    21. E 4.176E+006
    22. POISSON 0.3
    23. DENSITY 0.489024
    24. ALPHA 6.5E-006
    25. DAMP 0.03
    26. END DEFINE MATERIAL
    27. MEMBER PROPERTY AMERICAN
    28. 4 5 PRIS YD 1.416 ZD 1
    29. MEMBER PROPERTY AMERICAN
    30. 1 2 TAPERED 2.083 1 1.5 1 0.2 1 0.2
    31. 3 6 TAPERED 1.83 1 1.416 1 0.2 1 0.2
    32. CONSTANTS
    33. MATERIAL CONCRETE5000 ALL
    34. SUPPORTS
    35. 1 FIXED BUT MZ
    36. 2 FIXED BUT MZ
    37. MEMBER OFFSET
    38. 3 START 1 -1.12 0
```

```
39. 6 START -1 -1.12 0
40. 1 END 0.75 -1.04 0
41. 2 END -0.75 -1.04 0
42. DEFINE MOVING LOAD
43. ***TRUCK
44. TYPE 1 LOAD 3.9 3.9 0.975
45. DIST 14 14
46. ***TANDEM
47. TYPE 2 LOAD 3.05 3.05
48. DIST 4
49. ***
50. LOAD 1 LOADTYPE NONE  TITLE LOAD CASE 1- UNIFORM LOAD -COVER 1.0FT
51. MEMBER LOAD
52. 3 TO 6 UNI GY -0.141
53. SELFWEIGHT Y -1
54. LOAD 2 LOADTYPE NONE  TITLE -EMAX
55. MEMBER LOAD
56. 2 TRAP GX -0.49 -0.198
57. 1 TRAP GX 0.49 0.198
58. LOAD 4 LOADTYPE NONE  TITLE -AWL
59. MEMBER LOAD
60. 2 UNI GX -0.28
61. 1 UNI GX 0.28
62. LOAD 5 LOADTYPE NONE  TITLE -IPF-WATER INSIDE
63. MEMBER LOAD
64. 2 TRAP GX 0.286 0 0
65. 1 TRAP GX -0.286 0 0
66. LOAD 3 LOADTYPE NONE  TITLE LOAD CASE LL - LANE LOAD
67. MEMBER LOAD
68. 3 TO 6 UNI GY -0.064
69. LOAD 6 LOADTYPE LIVE  TITLE LOAD CASE LL - TRUCK
70. LOAD GENERATION 16
71. TYPE 1 -49.96 5.583 0 XINC 3
72. LOAD 26 LOADTYPE LIVE  TITLE LOAD CASE LL - TANDEM
**WARNING-A MOVING LOAD THAT WOULD HAVE BEEN APPLIED BEYOND THE X AND Z RANGES
          OF THE STRUCTURE HAS BEEN IGNORED. CASE=    7 WHEEL   1 OF   3
**WARNING-A MOVING LOAD THAT WOULD HAVE BEEN APPLIED BEYOND THE X AND Z RANGES
          OF THE STRUCTURE HAS BEEN IGNORED. CASE=    7 WHEEL   2 OF   3
**WARNING-A MOVING LOAD THAT WOULD HAVE BEEN APPLIED BEYOND THE X AND Z RANGES
          OF THE STRUCTURE HAS BEEN IGNORED. CASE=    8 WHEEL   1 OF   3
**WARNING-A MOVING LOAD THAT WOULD HAVE BEEN APPLIED BEYOND THE X AND Z RANGES
          OF THE STRUCTURE HAS BEEN IGNORED. CASE=    8 WHEEL   2 OF   3
**WARNING-A MOVING LOAD THAT WOULD HAVE BEEN APPLIED BEYOND THE X AND Z RANGES
          OF THE STRUCTURE HAS BEEN IGNORED. CASE=    9 WHEEL   1 OF   3
**WARNING-A MOVING LOAD THAT WOULD HAVE BEEN APPLIED BEYOND THE X AND Z RANGES
          OF THE STRUCTURE HAS BEEN IGNORED. CASE=    9 WHEEL   2 OF   3
**WARNING-A MOVING LOAD THAT WOULD HAVE BEEN APPLIED BEYOND THE X AND Z RANGES
          OF THE STRUCTURE HAS BEEN IGNORED. CASE=   10 WHEEL   1 OF   3
**WARNING-A MOVING LOAD THAT WOULD HAVE BEEN APPLIED BEYOND THE X AND Z RANGES
          OF THE STRUCTURE HAS BEEN IGNORED. CASE=   10 WHEEL   2 OF   3
**WARNING-A MOVING LOAD THAT WOULD HAVE BEEN APPLIED BEYOND THE X AND Z RANGES
          OF THE STRUCTURE HAS BEEN IGNORED. CASE=   11 WHEEL   1 OF   3
**WARNING-A MOVING LOAD THAT WOULD HAVE BEEN APPLIED BEYOND THE X AND Z RANGES
          OF THE STRUCTURE HAS BEEN IGNORED. CASE=   11 WHEEL   2 OF   3
*ADDITIONAL MOVING LOAD MESSAGES SUPPRESSED
*ADDITIONAL MOVING LOAD MESSAGES SUPPRESSED
```

```
73. LOAD GENERATION 10
74. TYPE 2 -25.96 5.583 0 XINC 3
75. ***TRUCK
76. LOAD COMB 100 COMBINATION LOAD CASE -MAX MOMENT OUTSIDE
77. 7 1.75 3 1.75 1 1.3 2 1.35 4 1.75
78. LOAD COMB 101 COMBINATION LOAD CASE
79. 8 1.75 3 1.75 1 1.3 2 1.35 4 1.75
80. LOAD COMB 102 COMBINATION LOAD CASE
81. 9 1.75 3 1.75 1 1.3 2 1.35 4 1.75
82. LOAD COMB 103 COMBINATION LOAD CASE
83. 10 1.75 3 1.75 1 1.3 2 1.35 4 1.75
84. LOAD COMB 104 COMBINATION LOAD CASE
85. 11 1.75 3 1.75 1 1.3 2 1.35 4 1.75
86. LOAD COMB 105 COMBINATION LOAD CASE
87. 12 1.75 3 1.75 1 1.3 2 1.35 4 1.75
88. LOAD COMB 106 COMBINATION LOAD CASE
89. 13 1.75 3 1.75 1 1.25 2 1.35 4 1.75
90. LOAD COMB 107 COMBINATION LOAD CASE
91. 14 1.75 3 1.75 1 1.3 2 1.35 4 1.75
92. LOAD COMB 108 COMBINATION LOAD CASE
93. 15 1.75 3 1.75 1 1.3 2 1.35 4 1.75
94. LOAD COMB 109 COMBINATION LOAD CASE
95. 16 1.75 3 1.75 1 1.3 2 1.35 4 1.75
96. LOAD COMB 110 COMBINATION LOAD CASE
97. 17 1.75 3 1.75 1 1.3 2 1.35 4 1.75
98. LOAD COMB 111 COMBINATION LOAD CASE
99. 18 1.75 3 1.75 1 1.3 2 1.35 4 1.75
100. LOAD COMB 112 COMBINATION LOAD CASE
101. 19 1.75 3 1.75 1 1.3 2 1.35 4 1.75
102. LOAD COMB 113 COMBINATION LOAD CASE
103. 20 1.75 3 1.75 1 1.3 2 1.35 4 1.75
104. LOAD COMB 114 COMBINATION LOAD CASE
105. 21 1.75 3 1.75 1 1.3 2 1.35 4 1.75
106. LOAD COMB 115 COMBINATION LOAD CASE
107. 22 1.75 3 1.75 1 1.3 2 1.35 4 1.75
108. LOAD COMB 200 COMBINATION LOAD CASE -MAX MOMENT INSIDE
109. 7 1.75 3 1.75 1 1.3 2 0.5 5 1.0
110. LOAD COMB 201 COMBINATION LOAD CASE
111. 8 1.75 3 1.75 1 1.3 2 0.5 5 1.0
112. LOAD COMB 202 COMBINATION LOAD CASE
113. 9 1.75 3 1.75 1 1.3 2 0.5 5 1.0
114. LOAD COMB 203 COMBINATION LOAD CASE
115. 10 1.75 3 1.75 1 1.3 2 0.5 5 1.0
116. LOAD COMB 204 COMBINATION LOAD CASE
117. 11 1.75 3 1.75 1 1.3 2 0.5 5 1.0
118. LOAD COMB 205 COMBINATION LOAD CASE
119. 12 1.75 3 1.75 1 1.3 2 0.5 5 1.0
120. LOAD COMB 206 COMBINATION LOAD CASE
121. 13 1.75 3 1.75 1 1.3 2 0.5 5 1.0
122. LOAD COMB 207 COMBINATION LOAD CASE
123. 14 1.75 3 1.75 1 1.3 2 0.5 5 1.0
124. LOAD COMB 208 COMBINATION LOAD CASE
125. 15 1.75 3 1.75 1 1.3 2 0.5 5 1.0
126. LOAD COMB 209 COMBINATION LOAD CASE
127. 16 1.75 3 1.75 1 1.3 2 0.5 5 1.0
128. LOAD COMB 210 COMBINATION LOAD CASE
```

```
129. 17 1.75 3 1.75 1 1.3 2 0.5 5 1.0
130. LOAD COMB 211 COMBINATION LOAD CASE
131. 18 1.75 3 1.75 1 1.3 2 0.5 5 1.0
132. LOAD COMB 212 COMBINATION LOAD CASE
133. 19 1.75 3 1.75 1 1.3 2 0.5 5 1.0
134. LOAD COMB 213 COMBINATION LOAD CASE
135. 20 1.75 3 1.75 1 1.3 2 0.5 5 1.0
136. LOAD COMB 214 COMBINATION LOAD CASE
137. 21 1.75 3 1.75 1 1.3 2 0.5 5 1.0
138. LOAD COMB 215 COMBINATION LOAD CASE
139. 22 1.75 3 1.75 1 1.3 2 0.5 5 1.0
140. LOAD COMB 300 COMBINATION LOAD CASE -CRACK CONTROL-MAX OUTSIDE
141. 7 1.0 3 1.0 1 1.0 2 1.0 4 1.0
142. LOAD COMB 301 COMBINATION LOAD CASE
143. 8 1.0 3 1.0 1 1.0 2 1.0 4 1.0
144. LOAD COMB 302 COMBINATION LOAD CASE
145. 9 1.0 3 1.0 1 1.0 2 1.0 4 1.0
146. LOAD COMB 303 COMBINATION LOAD CASE
147. 10 1.0 3 1.0 1 1.0 2 1.0 4 1.0
148. LOAD COMB 304 COMBINATION LOAD CASE
149. 11 1.0 3 1.0 1 1.0 2 1.0 4 1.0
150. LOAD COMB 305 COMBINATION LOAD CASE
151. 12 1.0 3 1.0 1 1.0 2 1.0 4 1.0
152. LOAD COMB 306 COMBINATION LOAD CASE
153. 13 1.0 3 1.0 1 1.0 2 1.0 4 1.0
154. LOAD COMB 307 COMBINATION LOAD CASE
155. 14 1.0 3 1.0 1 1.0 2 1.0 4 1.0
156. LOAD COMB 308 COMBINATION LOAD CASE
157. 15 1.0 3 1.0 1 1.0 2 1.0 4 1.0
158. LOAD COMB 309 COMBINATION LOAD CASE
159. 16 1.0 3 1.0 1 1.0 2 1.0 4 1.0
160. LOAD COMB 310 COMBINATION LOAD CASE
161. 17 1.0 3 1.0 1 1.0 2 1.0 4 1.0
162. LOAD COMB 311 COMBINATION LOAD CASE
163. 18 1.0 3 1.0 1 1.0 2 1.0 4 1.0
164. LOAD COMB 312 COMBINATION LOAD CASE
165. 19 1.0 3 1.0 1 1.0 2 1.0 4 1.0
166. LOAD COMB 313 COMBINATION LOAD CASE
167. 20 1.0 3 1.0 1 1.0 2 1.0 4 1.0
168. LOAD COMB 314 COMBINATION LOAD CASE
169. 21 1.0 3 1.0 1 1.0 2 1.0 4 1.0
170. LOAD COMB 315 COMBINATION LOAD CASE
171. 22 1.0 3 1.0 1 1.0 2 1.0 4 1.0
172. LOAD COMB 400 COMBINATION LOAD CASE -CRACK CONTROL-MAX INSIDE
173. 7 1.0 3 1.0 1 1.0 2 0.5 5 1.0
174. LOAD COMB 401 COMBINATION LOAD CASE
175. 8 1.0 3 1.0 1 1.0 2 0.5 5 1.0
176. LOAD COMB 402 COMBINATION LOAD CASE
177. 9 1.0 3 1.0 1 1.0 2 0.5 5 1.0
178. LOAD COMB 403 COMBINATION LOAD CASE
179. 10 1.0 3 1.0 1 1.0 2 0.5 5 1.0
180. LOAD COMB 404 COMBINATION LOAD CASE
181. 11 1.0 3 1.0 1 1.0 2 0.5 5 1.0
182. LOAD COMB 405 COMBINATION LOAD CASE
183. 12 1.0 3 1.0 1 1.0 2 0.5 5 1.0
184. LOAD COMB 406 COMBINATION LOAD CASE
```

```
185. 13 1.0 3 1.0 1 1.0 2 0.5 5 1.0
186. LOAD COMB 407 COMBINATION LOAD CASE
187. 14 1.0 3 1.0 1 1.0 2 0.5 5 1.0
188. LOAD COMB 408 COMBINATION LOAD CASE
189. 15 1.0 3 1.0 1 1.0 2 0.5 5 1.0
190. LOAD COMB 409 COMBINATION LOAD CASE
191. 16 1.0 3 1.0 1 1.0 2 0.5 5 1.0
192. LOAD COMB 410 COMBINATION LOAD CASE
193. 17 1.0 3 1.0 1 1.0 2 0.5 5 1.0
194. LOAD COMB 411 COMBINATION LOAD CASE
195. 18 1.0 3 1.0 1 1.0 2 0.5 5 1.0
196. LOAD COMB 412 COMBINATION LOAD CASE
197. 19 1.0 3 1.0 1 1.0 2 0.5 5 1.0
198. LOAD COMB 413 COMBINATION LOAD CASE
199. 20 1.0 3 1.0 1 1.0 2 0.5 5 1.0
200. LOAD COMB 414 COMBINATION LOAD CASE
201. 21 1.0 3 1.0 1 1.0 2 0.5 5 1.0
202. LOAD COMB 415 COMBINATION LOAD CASE
203. 22 1.0 3 1.0 1 1.0 2 0.5 5 1.0
204. LOAD COMB 500 COMBINATION LOAD CASE -CHECK SUPPORT DISPL.
205. 7 1.0 3 1.0 1 1.0
206. LOAD COMB 501 COMBINATION LOAD CASE
207. 8 1.0 3 1.0 1 1.0
208. LOAD COMB 502 COMBINATION LOAD CASE
209. 9 1.0 3 1.0 1 1.0
210. LOAD COMB 503 COMBINATION LOAD CASE
211. 10 1.0 3 1.0 1 1.0
212. LOAD COMB 504 COMBINATION LOAD CASE
213. 11 1.0 3 1.0 1 1.0
214. LOAD COMB 505 COMBINATION LOAD CASE
215. 12 1.0 3 1.0 1 1.0
216. LOAD COMB 506 COMBINATION LOAD CASE
217. 13 1.0 3 1.0 1 1.0
218. LOAD COMB 507 COMBINATION LOAD CASE
219. 14 1.0 3 1.0 1 1.0
220. LOAD COMB 508 COMBINATION LOAD CASE
221. 15 1.0 3 1.0 1 1.0
222. LOAD COMB 509 COMBINATION LOAD CASE
223. 16 1.0 3 1.0 1 1.0
224. LOAD COMB 510 COMBINATION LOAD CASE
225. 17 1.0 3 1.0 1 1.0
226. LOAD COMB 511 COMBINATION LOAD CASE
227. 18 1.0 3 1.0 1 1.0
228. LOAD COMB 512 COMBINATION LOAD CASE
229. 19 1.0 3 1.0 1 1.0
230. LOAD COMB 513 COMBINATION LOAD CASE
231. 20 1.0 3 1.0 1 1.0
232. LOAD COMB 514 COMBINATION LOAD CASE
233. 21 1.0 3 1.0 1 1.0
234. LOAD COMB 515 COMBINATION LOAD CASE
235. 22 1.0 3 1.0 1 1.0
236. LOAD COMB 600 COMBINATION LOAD CASE -CHECK DEFLEC.
237. 7 1.0 3 1.0
238. LOAD COMB 601 COMBINATION LOAD CASE
239. 8 1.0 3 1.0
240. LOAD COMB 602 COMBINATION LOAD CASE
```

```
241. 9 1.0 3 1.0
242. LOAD COMB 603 COMBINATION LOAD CASE
243. 10 1.0 3 1.0
244. LOAD COMB 604 COMBINATION LOAD CASE
245. 11 1.0 3 1.0
246. LOAD COMB 605 COMBINATION LOAD CASE
247. 12 1.0 3 1.0
248. LOAD COMB 606 COMBINATION LOAD CASE
249. 13 1.0 3 1.0
250. LOAD COMB 607 COMBINATION LOAD CASE
251. 14 1.0 3 1.0
252. LOAD COMB 608 COMBINATION LOAD CASE
253. 15 1.0 3 1.0
254. LOAD COMB 609 COMBINATION LOAD CASE
255. 16 1.0 3 1.0
256. LOAD COMB 610 COMBINATION LOAD CASE
257. 17 1.0 3 1.0
258. LOAD COMB 611 COMBINATION LOAD CASE
259. 18 1.0 3 1.0
260. LOAD COMB 612 COMBINATION LOAD CASE
261. 19 1.0 3 1.0
262. LOAD COMB 613 COMBINATION LOAD CASE
263. 20 1.0 3 1.0
264. LOAD COMB 614 COMBINATION LOAD CASE
265. 21 1.0 3 1.0
266. LOAD COMB 615 COMBINATION LOAD CASE
267. 22 1.0 3 1.0
268. ***
269. LOAD COMB 700 COMBINATION LOAD CASE -DL
270. 1 1.0 2 1.0 4 1.0
271. LOAD COMB 701 COMBINATION LOAD CASE -DL
272. 1 1.0 2 0.5 5 1.0
273. ***
274. LOAD COMB 800 COMBINATION LOAD CASE -LL
275. 7 1.0 3 1.0
276. LOAD COMB 801 COMBINATION LOAD CASE
277. 8 1.0 3 1.0
278. LOAD COMB 802 COMBINATION LOAD CASE
279. 9 1.0 3 1.0
280. LOAD COMB 803 COMBINATION LOAD CASE
281. 10 1.0 3 1.0
282. LOAD COMB 804 COMBINATION LOAD CASE
283. 11 1.0 3 1.0
284. LOAD COMB 805 COMBINATION LOAD CASE
285. 12 1.0 3 1.0
286. LOAD COMB 806 COMBINATION LOAD CASE
287. 13 1.0 3 1.0
288. LOAD COMB 807 COMBINATION LOAD CASE
289. 14 1.0 3 1.0
290. LOAD COMB 808 COMBINATION LOAD CASE
291. 15 1.0 3 1.0
292. LOAD COMB 809 COMBINATION LOAD CASE
293. 16 1.0 3 1.0
294. LOAD COMB 810 COMBINATION LOAD CASE
295. 17 1.0 3 1.0
296. LOAD COMB 811 COMBINATION LOAD CASE
```

```
297. 18 1.0 3 1.0
298. LOAD COMB 812 COMBINATION LOAD CASE
299. 19 1.0 3 1.0
300. LOAD COMB 813 COMBINATION LOAD CASE
301. 20 1.0 3 1.0
302. LOAD COMB 814 COMBINATION LOAD CASE
303. 21 1.0 3 1.0
304. LOAD COMB 815 COMBINATION LOAD CASE
305. 22 1.0 3 1.0
306. LOAD COMB 1000 COMBINATION LOAD CASE -MAX MOMENT OUTSIDE
307. 27 1.75 3 1.75 1 1.3 2 1.35 4 1.75
308. LOAD COMB 1001 COMBINATION LOAD CASE
309. 28 1.75 3 1.75 1 1.3 2 1.35 4 1.75
310. LOAD COMB 1002 COMBINATION LOAD CASE
311. 29 1.75 3 1.75 1 1.3 2 1.35 4 1.75
312. LOAD COMB 1003 COMBINATION LOAD CASE
313. 30 1.75 3 1.75 1 1.3 2 1.35 4 1.75
314. LOAD COMB 1004 COMBINATION LOAD CASE
315. 31 1.75 3 1.75 1 1.3 2 1.35 4 1.75
316. LOAD COMB 1005 COMBINATION LOAD CASE
317. 32 1.75 3 1.75 1 1.3 2 1.35 4 1.75
318. LOAD COMB 1006 COMBINATION LOAD CASE
319. 33 1.75 3 1.75 1 1.3 2 1.35 4 1.75
320. LOAD COMB 1007 COMBINATION LOAD CASE
321. 34 1.75 3 1.75 1 1.3 2 1.35 4 1.75
322. LOAD COMB 1008 COMBINATION LOAD CASE
323. 35 1.75 3 1.75 1 1.3 2 1.35 4 1.75
324. LOAD COMB 1009 COMBINATION LOAD CASE
325. 36 1.75 3 1.75 1 1.3 2 1.35 4 1.75
326. LOAD COMB 2000 COMBINATION LOAD CASE -MAX MOMENT INSIDE
327. 27 1.75 3 1.75 1 1.3 2 0.5 5 1.0
328. LOAD COMB 2001 COMBINATION LOAD CASE
329. 28 1.75 3 1.75 1 1.3 2 0.5 5 1.0
330. LOAD COMB 2002 COMBINATION LOAD CASE
331. 29 1.75 3 1.75 1 1.3 2 0.5 5 1.0
332. LOAD COMB 2003 COMBINATION LOAD CASE
333. 30 1.75 3 1.75 1 1.3 2 0.5 5 1.0
334. LOAD COMB 2004 COMBINATION LOAD CASE
335. 31 1.75 3 1.75 1 1.3 2 0.5 5 1.0
336. LOAD COMB 2005 COMBINATION LOAD CASE
337. 32 1.75 3 1.75 1 1.3 2 0.5 5 1.0
338. LOAD COMB 2006 COMBINATION LOAD CASE
339. 33 1.75 3 1.75 1 1.3 2 0.5 5 1.0
340. LOAD COMB 2007 COMBINATION LOAD CASE
341. 34 1.75 3 1.75 1 1.3 2 0.5 5 1.0
342. LOAD COMB 2008 COMBINATION LOAD CASE
343. 35 1.75 3 1.75 1 1.3 2 0.5 5 1.0
344. LOAD COMB 2009 COMBINATION LOAD CASE
345. 36 1.75 3 1.75 1 1.3 2 0.5 5 1.0
346. LOAD COMB 3000 COMBINATION LOAD CASE -CRACK CONTROL-MAX OUTSIDE
347. 27 1.0 3 1.0 1 1.0 2 1.0 4 1.0
348. LOAD COMB 3001 COMBINATION LOAD CASE
349. 28 1.0 3 1.0 1 1.0 2 1.0 4 1.0
350. LOAD COMB 3002 COMBINATION LOAD CASE
351. 29 1.0 3 1.0 1 1.0 2 1.0 4 1.0
352. LOAD COMB 3003 COMBINATION LOAD CASE
```

```
353. 30 1.0 3 1.0 1 1.0 2 1.0 4 1.0
354. LOAD COMB 3004 COMBINATION LOAD CASE
355. 31 1.0 3 1.0 1 1.0 2 1.0 4 1.0
356. LOAD COMB 3005 COMBINATION LOAD CASE
357. 32 1.0 3 1.0 1 1.0 2 1.0 4 1.0
358. LOAD COMB 3006 COMBINATION LOAD CASE
359. 33 1.0 3 1.0 1 1.0 2 1.0 4 1.0
360. LOAD COMB 3007 COMBINATION LOAD CASE
361. 34 1.0 3 1.0 1 1.0 2 1.0 4 1.0
362. LOAD COMB 3008 COMBINATION LOAD CASE
363. 35 1.0 3 1.0 1 1.0 2 1.0 4 1.0
364. LOAD COMB 3009 COMBINATION LOAD CASE
365. 36 1.0 3 1.0 1 1.0 2 1.0 4 1.0
366. LOAD COMB 4000 COMBINATION LOAD CASE -CRACK CONTROL-MAX INSIDE
367. 27 1.0 3 1.0 1 1.0 2 0.5 5 1.0
368. LOAD COMB 4001 COMBINATION LOAD CASE
369. 28 1.0 3 1.0 1 1.0 2 0.5 5 1.0
370. LOAD COMB 4002 COMBINATION LOAD CASE
371. 29 1.0 3 1.0 1 1.0 2 0.5 5 1.0
372. LOAD COMB 4003 COMBINATION LOAD CASE
373. 30 1.0 3 1.0 1 1.0 2 0.5 5 1.0
374. LOAD COMB 4004 COMBINATION LOAD CASE
375. 31 1.0 3 1.0 1 1.0 2 0.5 5 1.0
376. LOAD COMB 4005 COMBINATION LOAD CASE
377. 32 1.0 3 1.0 1 1.0 2 0.5 5 1.0
378. LOAD COMB 4006 COMBINATION LOAD CASE
379. 33 1.0 3 1.0 1 1.0 2 0.5 5 1.0
380. LOAD COMB 4007 COMBINATION LOAD CASE
381. 34 1.0 3 1.0 1 1.0 2 0.5 5 1.0
382. LOAD COMB 4008 COMBINATION LOAD CASE
383. 35 1.0 3 1.0 1 1.0 2 0.5 5 1.0
384. LOAD COMB 4009 COMBINATION LOAD CASE
385. 36 1.0 3 1.0 1 1.0 2 0.5 5 1.0
386. LOAD COMB 5000 COMBINATION LOAD CASE -CHECK SUPPORT DISPL.
387. 27 1.0 3 1.0 1 1.0
388. LOAD COMB 5001 COMBINATION LOAD CASE
389. 28 1.0 3 1.0 1 1.0
390. LOAD COMB 5002 COMBINATION LOAD CASE
391. 29 1.0 3 1.0 1 1.0
392. LOAD COMB 5003 COMBINATION LOAD CASE
393. 30 1.0 3 1.0 1 1.0
394. LOAD COMB 5004 COMBINATION LOAD CASE
395. 31 1.0 3 1.0 1 1.0
396. LOAD COMB 5005 COMBINATION LOAD CASE
397. 32 1.0 3 1.0 1 1.0
398. LOAD COMB 5006 COMBINATION LOAD CASE
399. 33 1.0 3 1.0 1 1.0
400. LOAD COMB 5007 COMBINATION LOAD CASE
401. 34 1.0 3 1.0 1 1.0
402. LOAD COMB 5008 COMBINATION LOAD CASE
403. 35 1.0 3 1.0 1 1.0
404. LOAD COMB 5009 COMBINATION LOAD CASE
405. 36 1.0 3 1.0 1 1.0
406. LOAD COMB 6000 COMBINATION LOAD CASE -CHECK DEFLEC.
407. 27 1.0 3 1.0
408. LOAD COMB 6001 COMBINATION LOAD CASE
```

```
409. 28 1.0 3 1.0
410. LOAD COMB 6002 COMBINATION LOAD CASE
411. 29 1.0 3 1.0
412. LOAD COMB 6003 COMBINATION LOAD CASE
413. 30 1.0 3 1.0
414. LOAD COMB 6004 COMBINATION LOAD CASE
415. 31 1.0 3 1.0
416. LOAD COMB 6005 COMBINATION LOAD CASE
417. 32 1.0 3 1.0
418. LOAD COMB 6006 COMBINATION LOAD CASE
419. 33 1.0 3 1.0
420. LOAD COMB 6007 COMBINATION LOAD CASE
421. 34 1.0 3 1.0
422. LOAD COMB 6008 COMBINATION LOAD CASE
423. 35 1.0 3 1.0
424. LOAD COMB 6009 COMBINATION LOAD CASE
425. 36 1.0 3 1.0
426. ***
427. LOAD COMB 7000 COMBINATION LOAD CASE -DL
428. 1 1.0 2 1.0 4 1.0
429. LOAD COMB 7001 COMBINATION LOAD CASE -DL
430. 1 1.0 2 0.5 5 1.0
431. ***
432. LOAD COMB 8000 COMBINATION LOAD CASE -LL
433. 27 1.0 3 1.0
434. LOAD COMB 8001 COMBINATION LOAD CASE
435. 28 1.0 3 1.0
436. LOAD COMB 8002 COMBINATION LOAD CASE
437. 29 1.0 3 1.0
438. LOAD COMB 8003 COMBINATION LOAD CASE
439. 30 1.0 3 1.0
440. LOAD COMB 8004 COMBINATION LOAD CASE
441. 31 1.0 3 1.0
442. LOAD COMB 8005 COMBINATION LOAD CASE
443. 32 1.0 3 1.0
444. LOAD COMB 8006 COMBINATION LOAD CASE
445. 33 1.0 3 1.0
446. LOAD COMB 8007 COMBINATION LOAD CASE
447. 34 1.0 3 1.0
448. LOAD COMB 8008 COMBINATION LOAD CASE
449. 35 1.0 3 1.0
450. LOAD COMB 8009 COMBINATION LOAD CASE
451. 36 1.0 3 1.0 1
452. PERFORM ANALYSIS
```

```
        P R O B L E M   S T A T I S T I C S
        -----------------------------------

  NUMBER OF JOINTS          7  NUMBER OF MEMBERS       6
  NUMBER OF PLATES          0  NUMBER OF SOLIDS        0
  NUMBER OF SURFACES        0  NUMBER OF SUPPORTS      2


        SOLVER USED IS THE OUT-OF-CORE BASIC SOLVER

  ORIGINAL/FINAL BAND-WIDTH=     5/     5/     31 DOF
TOTAL      PRIMARY LOAD CASES =    33, TOTAL DEGREES OF FREEDOM =      32
TOTAL LOAD COMBINATION  CASES =   186  SO FAR.
  SIZE OF STIFFNESS MATRIX =        1 DOUBLE  KILO-WORDS
  REQRD/AVAIL. DISK SPACE  =     12.0/      0.0 MB



453. ***LOAD LIST 1 2 4 5 7 TO 28
454. ***PRINT SUPPORT REACTION ALL
455. LOAD LIST 300 TO 315 400 TO 415 3000 TO 3009 4000 TO 4009
456. PRINT SUPPORT REACTION ALL
```

SUPPORT REACTIONS -UNIT KIP FEET STRUCTURE TYPE = SPACE

JOINT	LOAD	FORCE-X	FORCE-Y	FORCE-Z	MOM-X	MOM-Y	MOM Z
1	300	12.18	11.25	0.00	0.00	0.00	0.00
	301	12.43	11.18	0.00	0.00	0.00	0.00
	302	12.65	11.12	0.00	0.00	0.00	0.00
	303	12.84	11.05	0.00	0.00	0.00	0.00
	304	12.95	11.00	0.00	0.00	0.00	0.00
	305	13.77	14.66	0.00	0.00	0.00	0.00
	306	14.81	14.33	0.00	0.00	0.00	0.00
	307	15.71	14.00	0.00	0.00	0.00	0.00
	308	16.22	13.75	0.00	0.00	0.00	0.00
	309	16.77	13.42	0.00	0.00	0.00	0.00
	310	18.13	16.72	0.00	0.00	0.00	0.00
	311	19.19	16.12	0.00	0.00	0.00	0.00
	312	19.97	15.54	0.00	0.00	0.00	0.00
	313	20.16	15.03	0.00	0.00	0.00	0.00
	314	20.21	14.43	0.00	0.00	0.00	0.00
	315	19.90	13.83	0.00	0.00	0.00	0.00
	400	13.90	11.25	0.00	0.00	0.00	0.00
	401	14.15	11.18	0.00	0.00	0.00	0.00
	402	14.37	11.12	0.00	0.00	0.00	0.00
	403	14.57	11.05	0.00	0.00	0.00	0.00
	404	14.68	11.00	0.00	0.00	0.00	0.00
	405	15.49	14.66	0.00	0.00	0.00	0.00
	406	16.53	14.33	0.00	0.00	0.00	0.00
	407	17.43	14.00	0.00	0.00	0.00	0.00
	408	17.94	13.75	0.00	0.00	0.00	0.00
	409	18.49	13.42	0.00	0.00	0.00	0.00
	410	19.86	16.72	0.00	0.00	0.00	0.00
	411	20.91	16.12	0.00	0.00	0.00	0.00
	412	21.69	15.54	0.00	0.00	0.00	0.00
	413	21.88	15.03	0.00	0.00	0.00	0.00
	414	21.93	14.43	0.00	0.00	0.00	0.00
	415	21.62	13.83	0.00	0.00	0.00	0.00
	3000	12.37	13.28	0.00	0.00	0.00	0.00
	3001	13.14	13.07	0.00	0.00	0.00	0.00
	3002	14.64	15.71	0.00	0.00	0.00	0.00
	3003	15.97	15.29	0.00	0.00	0.00	0.00
	3004	16.96	14.94	0.00	0.00	0.00	0.00
	3005	17.72	14.59	0.00	0.00	0.00	0.00
	3006	18.40	14.17	0.00	0.00	0.00	0.00
	3007	18.81	13.76	0.00	0.00	0.00	0.00
	3008	18.94	13.34	0.00	0.00	0.00	0.00
	3009	18.80	12.92	0.00	0.00	0.00	0.00
	4000	14.09	13.28	0.00	0.00	0.00	0.00
	4001	14.86	13.07	0.00	0.00	0.00	0.00
	4002	16.36	15.71	0.00	0.00	0.00	0.00
	4003	17.69	15.29	0.00	0.00	0.00	0.00

SUPPORT REACTIONS -UNIT KIP FEET STRUCTURE TYPE = SPACE

JOINT	LOAD	FORCE-X	FORCE-Y	FORCE-Z	MOM-X	MOM-Y	MOM Z
	4004	18.68	14.94	0.00	0.00	0.00	0.00
	4005	19.44	14.59	0.00	0.00	0.00	0.00
	4006	20.12	14.17	0.00	0.00	0.00	0.00
	4007	20.53	13.76	0.00	0.00	0.00	0.00
	4008	20.66	13.34	0.00	0.00	0.00	0.00
	4009	20.52	12.92	0.00	0.00	0.00	0.00
2	300	-12.18	10.32	0.00	0.00	0.00	0.00
	301	-12.43	10.38	0.00	0.00	0.00	0.00
	302	-12.65	10.45	0.00	0.00	0.00	0.00
	303	-12.84	10.52	0.00	0.00	0.00	0.00
	304	-12.95	10.56	0.00	0.00	0.00	0.00
	305	-13.77	10.81	0.00	0.00	0.00	0.00
	306	-14.81	11.14	0.00	0.00	0.00	0.00
	307	-15.71	11.47	0.00	0.00	0.00	0.00
	308	-16.22	11.72	0.00	0.00	0.00	0.00
	309	-16.77	12.05	0.00	0.00	0.00	0.00
	310	-18.13	12.65	0.00	0.00	0.00	0.00
	311	-19.19	13.24	0.00	0.00	0.00	0.00
	312	-19.97	13.82	0.00	0.00	0.00	0.00
	313	-20.16	14.34	0.00	0.00	0.00	0.00
	314	-20.21	14.94	0.00	0.00	0.00	0.00
	315	-19.90	14.56	0.00	0.00	0.00	0.00
	400	-13.90	10.32	0.00	0.00	0.00	0.00
	401	-14.15	10.38	0.00	0.00	0.00	0.00
	402	-14.37	10.45	0.00	0.00	0.00	0.00
	403	-14.57	10.52	0.00	0.00	0.00	0.00
	404	-14.68	10.56	0.00	0.00	0.00	0.00
	405	-15.49	10.81	0.00	0.00	0.00	0.00
	406	-16.53	11.14	0.00	0.00	0.00	0.00
	407	-17.43	11.47	0.00	0.00	0.00	0.00
	408	-17.94	11.72	0.00	0.00	0.00	0.00
	409	-18.49	12.05	0.00	0.00	0.00	0.00
	410	-19.86	12.65	0.00	0.00	0.00	0.00
	411	-20.91	13.24	0.00	0.00	0.00	0.00
	412	-21.69	13.82	0.00	0.00	0.00	0.00
	413	-21.88	14.34	0.00	0.00	0.00	0.00
	414	-21.93	14.94	0.00	0.00	0.00	0.00
	415	-21.62	14.56	0.00	0.00	0.00	0.00
	3000	-12.37	10.37	0.00	0.00	0.00	0.00
	3001	-13.14	10.57	0.00	0.00	0.00	0.00
	3002	-14.64	10.99	0.00	0.00	0.00	0.00
	3003	-15.97	11.40	0.00	0.00	0.00	0.00
	3004	-16.96	11.75	0.00	0.00	0.00	0.00
	3005	-17.72	12.10	0.00	0.00	0.00	0.00
	3006	-18.40	12.52	0.00	0.00	0.00	0.00
	3007	-18.81	12.93	0.00	0.00	0.00	0.00

SUPPORT REACTIONS -UNIT KIP FEET STRUCTURE TYPE = SPACE

JOINT	LOAD	FORCE-X	FORCE-Y	FORCE-Z	MOM-X	MOM-Y	MOM Z
3008		-18.94	13.35	0.00	0.00	0.00	0.00
3009		-18.80	13.77	0.00	0.00	0.00	0.00
4000		-14.09	10.37	0.00	0.00	0.00	0.00
4001		-14.86	10.57	0.00	0.00	0.00	0.00
4002		-16.36	10.99	0.00	0.00	0.00	0.00
4003		-17.69	11.40	0.00	0.00	0.00	0.00
4004		-18.68	11.75	0.00	0.00	0.00	0.00
4005		-19.44	12.10	0.00	0.00	0.00	0.00
4006		-20.12	12.52	0.00	0.00	0.00	0.00
4007		-20.53	12.93	0.00	0.00	0.00	0.00
4008		-20.66	13.35	0.00	0.00	0.00	0.00
4009		-20.52	13.77	0.00	0.00	0.00	0.00

********** END OF LATEST ANALYSIS RESULT **********

```
457. ***DL
458. LOAD LIST 700 701 7000 7001
459. PRINT SUPPORT REACTION ALL
```

SUPPORT REACTIONS -UNIT KIP FEET STRUCTURE TYPE = SPACE

JOINT	LOAD	FORCE-X	FORCE-Y	FORCE-Z	MOM-X	MOM-Y	MOM Z
1	700	10.01	8.95	0.00	0.00	0.00	0.00
	701	11.73	8.95	0.00	0.00	0.00	0.00
	7000	10.01	8.95	0.00	0.00	0.00	0.00
	7001	11.73	8.95	0.00	0.00	0.00	0.00
2	700	-10.01	8.95	0.00	0.00	0.00	0.00
	701	-11.73	8.95	0.00	0.00	0.00	0.00
	7000	-10.01	8.95	0.00	0.00	0.00	0.00
	7001	-11.73	8.95	0.00	0.00	0.00	0.00

********** END OF LATEST ANALYSIS RESULT **********

```
460. ***LL
461. LOAD LIST 800 TO 815 8000 TO 8009
462. PRINT SUPPORT REACTION ALL
```

SUPPORT REACTIONS -UNIT KIP FEET STRUCTURE TYPE = SPACE

JOINT	LOAD	FORCE-X	FORCE-Y	FORCE-Z	MOM-X	MOM-Y	MOM Z
1	800	2.17	2.30	0.00	0.00	0.00	0.00
	801	2.42	2.23	0.00	0.00	0.00	0.00
	802	2.64	2.17	0.00	0.00	0.00	0.00
	803	2.83	2.10	0.00	0.00	0.00	0.00
	804	2.94	2.05	0.00	0.00	0.00	0.00
	805	3.76	5.71	0.00	0.00	0.00	0.00
	806	4.80	5.38	0.00	0.00	0.00	0.00
	807	5.70	5.05	0.00	0.00	0.00	0.00
	808	6.21	4.80	0.00	0.00	0.00	0.00
	809	6.76	4.47	0.00	0.00	0.00	0.00
	810	8.13	7.77	0.00	0.00	0.00	0.00
	811	9.18	7.17	0.00	0.00	0.00	0.00
	812	9.96	6.60	0.00	0.00	0.00	0.00
	813	10.15	6.08	0.00	0.00	0.00	0.00
	814	10.20	5.48	0.00	0.00	0.00	0.00
	815	9.89	4.88	0.00	0.00	0.00	0.00
	8000	2.36	4.33	0.00	0.00	0.00	0.00
	8001	3.13	4.12	0.00	0.00	0.00	0.00
	8002	4.63	6.76	0.00	0.00	0.00	0.00
	8003	5.96	6.34	0.00	0.00	0.00	0.00
	8004	6.95	5.99	0.00	0.00	0.00	0.00
	8005	7.71	5.64	0.00	0.00	0.00	0.00
	8006	8.39	5.22	0.00	0.00	0.00	0.00
	8007	8.80	4.81	0.00	0.00	0.00	0.00
	8008	8.93	4.39	0.00	0.00	0.00	0.00
	8009	8.79	3.97	0.00	0.00	0.00	0.00
2	800	-2.17	1.37	0.00	0.00	0.00	0.00
	801	-2.42	1.43	0.00	0.00	0.00	0.00
	802	-2.64	1.50	0.00	0.00	0.00	0.00
	803	-2.83	1.57	0.00	0.00	0.00	0.00
	804	-2.94	1.61	0.00	0.00	0.00	0.00
	805	-3.76	1.86	0.00	0.00	0.00	0.00
	806	-4.80	2.19	0.00	0.00	0.00	0.00
	807	-5.70	2.52	0.00	0.00	0.00	0.00
	808	-6.21	2.77	0.00	0.00	0.00	0.00
	809	-6.76	3.10	0.00	0.00	0.00	0.00
	810	-8.13	3.70	0.00	0.00	0.00	0.00
	811	-9.18	4.30	0.00	0.00	0.00	0.00
	812	-9.96	4.87	0.00	0.00	0.00	0.00
	813	-10.15	5.39	0.00	0.00	0.00	0.00
	814	-10.20	5.99	0.00	0.00	0.00	0.00
	815	-9.89	5.61	0.00	0.00	0.00	0.00
	8000	-2.36	1.42	0.00	0.00	0.00	0.00
	8001	-3.13	1.62	0.00	0.00	0.00	0.00
	8002	-4.63	2.04	0.00	0.00	0.00	0.00
	8003	-5.96	2.45	0.00	0.00	0.00	0.00

SUPPORT REACTIONS -UNIT KIP FEET STRUCTURE TYPE = SPACE

JOINT	LOAD	FORCE-X	FORCE-Y	FORCE-Z	MOM-X	MOM-Y	MOM Z
	8004	-6.95	2.80	0.00	0.00	0.00	0.00
	8005	-7.71	3.15	0.00	0.00	0.00	0.00
	8006	-8.39	3.57	0.00	0.00	0.00	0.00
	8007	-8.80	3.98	0.00	0.00	0.00	0.00
	8008	-8.93	4.40	0.00	0.00	0.00	0.00
	8009	-8.79	4.82	0.00	0.00	0.00	0.00

********** END OF LATEST ANALYSIS RESULT **********

```
463. *** BEAM DISPLACEMENTS AT CL FROM 1.0LL
464. LOAD LIST 600 TO 615 6000 TO 6009
465. PRINT JOINT DISPLACEMENTS LIST 5
```

JOINT DISPLACEMENT (INCH RADIANS) STRUCTURE TYPE = SPACE

JOINT	LOAD	X-TRANS	Y-TRANS	Z-TRANS	X-ROTAN	Y-ROTAN	Z-ROTAN
5	600	0.00110	-0.03394	0.00000	0.00000	0.00000	0.00001
	601	0.00360	-0.03545	0.00000	0.00000	0.00000	0.00004
	602	0.00525	-0.03853	0.00000	0.00000	0.00000	0.00007
	603	0.00590	-0.04298	0.00000	0.00000	0.00000	0.00010
	604	0.00571	-0.04667	0.00000	0.00000	0.00000	0.00010
	605	0.01272	-0.05335	0.00000	0.00000	0.00000	0.00019
	606	0.01987	-0.06617	0.00000	0.00000	0.00000	0.00030
	607	0.02305	-0.08296	0.00000	0.00000	0.00000	0.00036
	608	0.02210	-0.09525	0.00000	0.00000	0.00000	0.00034
	609	0.01822	-0.11356	0.00000	0.00000	0.00000	0.00033
	610	0.02271	-0.13307	0.00000	0.00000	0.00000	0.00041
	611	0.02202	-0.15407	0.00000	0.00000	0.00000	0.00040
	612	0.01730	-0.17304	0.00000	0.00000	0.00000	0.00027
	613	0.00979	-0.17631	0.00000	0.00000	0.00000	0.00009
	614	0.00095	-0.17948	0.00000	0.00000	0.00000	0.00000
	615	-0.00785	-0.17747	0.00000	0.00000	0.00000	-0.00008
	6000	0.00345	-0.03386	0.00000	0.00000	0.00000	0.00004
	6001	0.01127	-0.03861	0.00000	0.00000	0.00000	0.00014
	6002	0.02535	-0.05074	0.00000	0.00000	0.00000	0.00034
	6003	0.03348	-0.07269	0.00000	0.00000	0.00000	0.00051
	6004	0.03601	-0.09681	0.00000	0.00000	0.00000	0.00061
	6005	0.03283	-0.12494	0.00000	0.00000	0.00000	0.00063
	6006	0.02483	-0.15674	0.00000	0.00000	0.00000	0.00056
	6007	0.01321	-0.18051	0.00000	0.00000	0.00000	0.00034
	6008	-0.00018	-0.18918	0.00000	0.00000	0.00000	0.00000
	6009	-0.01355	-0.18004	0.00000	0.00000	0.00000	-0.00035

********** END OF LATEST ANALYSIS RESULT **********

```
466. *** SUPPORT DISPLACEMENTS FROM 1.0DL+1.0LL
467. LOAD LIST 500 TO 515 5000 TO 5009
468. PRINT JOINT DISPLACEMENTS LIST 2
```

JOINT DISPLACEMENT (INCH RADIANS) STRUCTURE TYPE = SPACE

JOINT	LOAD	X-TRANS	Y-TRANS	Z-TRANS	X-ROTAN	Y-ROTAN	Z-ROTAN
2	500	0.00000	0.00000	0.00000	0.00000	0.00000	-0.00031
	501	0.00000	0.00000	0.00000	0.00000	0.00000	-0.00036
	502	0.00000	0.00000	0.00000	0.00000	0.00000	-0.00039
	503	0.00000	0.00000	0.00000	0.00000	0.00000	-0.00040
	504	0.00000	0.00000	0.00000	0.00000	0.00000	-0.00040
	505	0.00000	0.00000	0.00000	0.00000	0.00000	-0.00053
	506	0.00000	0.00000	0.00000	0.00000	0.00000	-0.00067
	507	0.00000	0.00000	0.00000	0.00000	0.00000	-0.00074
	508	0.00000	0.00000	0.00000	0.00000	0.00000	-0.00073
	509	0.00000	0.00000	0.00000	0.00000	0.00000	-0.00069
	510	0.00000	0.00000	0.00000	0.00000	0.00000	-0.00079
	511	0.00000	0.00000	0.00000	0.00000	0.00000	-0.00080
	512	0.00000	0.00000	0.00000	0.00000	0.00000	-0.00075
	513	0.00000	0.00000	0.00000	0.00000	0.00000	-0.00063
	514	0.00000	0.00000	0.00000	0.00000	0.00000	-0.00049
	515	0.00000	0.00000	0.00000	0.00000	0.00000	-0.00035
	5000	0.00000	0.00000	0.00000	0.00000	0.00000	-0.00035
	5001	0.00000	0.00000	0.00000	0.00000	0.00000	-0.00049
	5002	0.00000	0.00000	0.00000	0.00000	0.00000	-0.00074
	5003	0.00000	0.00000	0.00000	0.00000	0.00000	-0.00090
	5004	0.00000	0.00000	0.00000	0.00000	0.00000	-0.00097
	5005	0.00000	0.00000	0.00000	0.00000	0.00000	-0.00094
	5006	0.00000	0.00000	0.00000	0.00000	0.00000	-0.00083
	5007	0.00000	0.00000	0.00000	0.00000	0.00000	-0.00066
	5008	0.00000	0.00000	0.00000	0.00000	0.00000	-0.00046
	5009	0.00000	0.00000	0.00000	0.00000	0.00000	-0.00025

********** END OF LATEST ANALYSIS RESULT **********

469. LOAD LIST 300 TO 315 400 TO 415 3000 TO 3009 4000 TO 4009
470. PRINT MEMBER FORCES ALL

MEMBER END FORCES STRUCTURE TYPE = SPACE

ALL UNITS ARE -- KIP FEET (LOCAL)

MEMBER	LOAD	JT	AXIAL	SHEAR-Y	SHEAR-Z	TORSION	MOM-Y	MOM-Z
1	300	1	13.08	-10.18	0.00	0.00	0.00	0.00
		3	-12.33	13.22	0.00	0.00	0.00	-54.42
	301	1	13.06	-10.44	0.00	0.00	0.00	0.00
		3	-12.30	13.48	0.00	0.00	0.00	-55.59
	302	1	13.03	-10.67	0.00	0.00	0.00	0.00
		3	-12.28	13.71	0.00	0.00	0.00	-56.66
	303	1	12.99	-10.87	0.00	0.00	0.00	0.00
		3	-12.24	13.91	0.00	0.00	0.00	-57.59
	304	1	12.97	-10.99	0.00	0.00	0.00	0.00
		3	-12.21	14.03	0.00	0.00	0.00	-58.13
	305	1	16.71	-11.20	0.00	0.00	0.00	0.00
		3	-15.95	14.23	0.00	0.00	0.00	-59.09
	306	1	16.55	-12.28	0.00	0.00	0.00	0.00
		3	-15.80	15.31	0.00	0.00	0.00	-64.06
	307	1	16.37	-13.22	0.00	0.00	0.00	0.00
		3	-15.62	16.25	0.00	0.00	0.00	-68.38
	308	1	16.21	-13.76	0.00	0.00	0.00	0.00
		3	-15.45	16.80	0.00	0.00	0.00	-70.88
	309	1	15.97	-14.36	0.00	0.00	0.00	0.00
		3	-15.22	17.40	0.00	0.00	0.00	-73.67
	310	1	19.45	-15.17	0.00	0.00	0.00	0.00
		3	-18.70	18.21	0.00	0.00	0.00	-77.37
	311	1	19.03	-16.30	0.00	0.00	0.00	0.00
		3	-18.28	19.34	0.00	0.00	0.00	-82.60
	312	1	18.59	-17.17	0.00	0.00	0.00	0.00
		3	-17.84	20.21	0.00	0.00	0.00	-86.59
	313	1	18.11	-17.44	0.00	0.00	0.00	0.00
		3	-17.36	20.47	0.00	0.00	0.00	-87.82
	314	1	17.53	-17.59	0.00	0.00	0.00	0.00
		3	-16.78	20.63	0.00	0.00	0.00	-88.51
	315	1	16.89	-17.38	0.00	0.00	0.00	0.00
		3	-16.14	20.41	0.00	0.00	0.00	-87.54
	400	1	13.36	-11.88	0.00	0.00	0.00	0.00
		3	-12.16	12.22	0.00	0.00	0.00	-55.26
	401	1	13.34	-12.14	0.00	0.00	0.00	0.00
		3	-12.14	12.47	0.00	0.00	0.00	-56.43
	402	1	13.31	-12.37	0.00	0.00	0.00	0.00
		3	-12.11	12.70	0.00	0.00	0.00	-57.50
	403	1	13.27	-12.57	0.00	0.00	0.00	0.00
		3	-12.08	12.90	0.00	0.00	0.00	-58.43
	404	1	13.25	-12.69	0.00	0.00	0.00	0.00
		3	-12.05	13.02	0.00	0.00	0.00	-58.97

MEMBER END FORCES STRUCTURE TYPE = SPACE

ALL UNITS ARE -- KIP FEET (LOCAL)

MEMBER	LOAD	JT	AXIAL	SHEAR-Y	SHEAR-Z	TORSION	MOM-Y	MOM-Z
405		1	16.99	-12.90	0.00	0.00	0.00	0.00
		3	-15.79	13.23	0.00	0.00	0.00	-59.93
406		1	16.83	-13.98	0.00	0.00	0.00	0.00
		3	-15.63	14.31	0.00	0.00	0.00	-64.90
407		1	16.65	-14.91	0.00	0.00	0.00	0.00
		3	-15.45	15.25	0.00	0.00	0.00	-69.22
408		1	16.49	-15.46	0.00	0.00	0.00	0.00
		3	-15.29	15.79	0.00	0.00	0.00	-71.72
409		1	16.25	-16.06	0.00	0.00	0.00	0.00
		3	-15.05	16.40	0.00	0.00	0.00	-74.51
410		1	19.73	-16.87	0.00	0.00	0.00	0.00
		3	-18.53	17.20	0.00	0.00	0.00	-78.21
411		1	19.31	-18.00	0.00	0.00	0.00	0.00
		3	-18.11	18.34	0.00	0.00	0.00	-83.44
412		1	18.87	-18.87	0.00	0.00	0.00	0.00
		3	-17.67	19.20	0.00	0.00	0.00	-87.43
413		1	18.39	-19.14	0.00	0.00	0.00	0.00
		3	-17.19	19.47	0.00	0.00	0.00	-88.66
414		1	17.81	-19.29	0.00	0.00	0.00	0.00
		3	-16.61	19.62	0.00	0.00	0.00	-89.36
415		1	17.17	-19.08	0.00	0.00	0.00	0.00
		3	-15.97	19.41	0.00	0.00	0.00	-88.39
3000		1	15.11	-10.04	0.00	0.00	0.00	0.00
		3	-14.36	13.08	0.00	0.00	0.00	-53.76
3001		1	15.04	-10.84	0.00	0.00	0.00	0.00
		3	-14.28	13.87	0.00	0.00	0.00	-57.42
3002		1	17.88	-11.89	0.00	0.00	0.00	0.00
		3	-17.13	14.92	0.00	0.00	0.00	-62.26
3003		1	17.69	-13.27	0.00	0.00	0.00	0.00
		3	-16.94	16.31	0.00	0.00	0.00	-68.62
3004		1	17.50	-14.30	0.00	0.00	0.00	0.00
		3	-16.75	17.34	0.00	0.00	0.00	-73.37
3005		1	17.28	-15.11	0.00	0.00	0.00	0.00
		3	-16.53	18.15	0.00	0.00	0.00	-77.10
3006		1	16.98	-15.85	0.00	0.00	0.00	0.00
		3	-16.23	18.89	0.00	0.00	0.00	-80.50
3007		1	16.64	-16.32	0.00	0.00	0.00	0.00
		3	-15.88	19.36	0.00	0.00	0.00	-82.66
3008		1	16.25	-16.52	0.00	0.00	0.00	0.00
		3	-15.49	19.55	0.00	0.00	0.00	-83.58
3009		1	15.81	-16.45	0.00	0.00	0.00	0.00
		3	-15.06	19.48	0.00	0.00	0.00	-83.26
4000		1	15.39	-11.74	0.00	0.00	0.00	0.00
		3	-14.19	12.07	0.00	0.00	0.00	-54.60
4001		1	15.32	-12.53	0.00	0.00	0.00	0.00
		3	-14.12	12.87	0.00	0.00	0.00	-58.26

MEMBER END FORCES STRUCTURE TYPE = SPACE

ALL UNITS ARE -- KIP FEET (LOCAL)

MEMBER	LOAD	JT	AXIAL	SHEAR-Y	SHEAR-Z	TORSION	MOM-Y	MOM-Z
	4002	1	18.16	-13.58	0.00	0.00	0.00	0.00
		3	-16.96	13.92	0.00	0.00	0.00	-63.10
	4003	1	17.97	-14.97	0.00	0.00	0.00	0.00
		3	-16.77	15.30	0.00	0.00	0.00	-69.47
	4004	1	17.78	-16.00	0.00	0.00	0.00	0.00
		3	-16.59	16.33	0.00	0.00	0.00	-74.21
	4005	1	17.56	-16.81	0.00	0.00	0.00	0.00
		3	-16.36	17.14	0.00	0.00	0.00	-77.94
	4006	1	17.26	-17.55	0.00	0.00	0.00	0.00
		3	-16.06	17.88	0.00	0.00	0.00	-81.34
	4007	1	16.92	-18.02	0.00	0.00	0.00	0.00
		3	-15.72	18.35	0.00	0.00	0.00	-83.51
	4008	1	16.53	-18.22	0.00	0.00	0.00	0.00
		3	-15.33	18.55	0.00	0.00	0.00	-84.42
	4009	1	16.09	-18.15	0.00	0.00	0.00	0.00
		3	-14.89	18.48	0.00	0.00	0.00	-84.10
2	300	2	12.16	-10.34	0.00	0.00	0.00	0.00
		7	-11.41	13.37	0.00	0.00	0.00	-55.12
	301	2	12.27	-10.57	0.00	0.00	0.00	0.00
		7	-11.52	13.61	0.00	0.00	0.00	-56.19
	302	2	12.37	-10.78	0.00	0.00	0.00	0.00
		7	-11.62	13.82	0.00	0.00	0.00	-57.16
	303	2	12.47	-10.96	0.00	0.00	0.00	0.00
		7	-11.71	14.00	0.00	0.00	0.00	-57.99
	304	2	12.53	-11.06	0.00	0.00	0.00	0.00
		7	-11.78	14.10	0.00	0.00	0.00	-58.46
	305	2	12.90	-11.83	0.00	0.00	0.00	0.00
		7	-12.15	14.86	0.00	0.00	0.00	-61.98
	306	2	13.40	-12.80	0.00	0.00	0.00	0.00
		7	-12.65	15.83	0.00	0.00	0.00	-66.45
	307	2	13.87	-13.63	0.00	0.00	0.00	0.00
		7	-13.12	16.67	0.00	0.00	0.00	-70.28
	308	2	14.20	-14.09	0.00	0.00	0.00	0.00
		7	-13.45	17.13	0.00	0.00	0.00	-72.40
	309	2	14.62	-14.59	0.00	0.00	0.00	0.00
		7	-13.87	17.62	0.00	0.00	0.00	-74.69
	310	2	15.43	-15.83	0.00	0.00	0.00	0.00
		7	-14.68	18.87	0.00	0.00	0.00	-80.43
	311	2	16.19	-16.77	0.00	0.00	0.00	0.00
		7	-15.44	19.81	0.00	0.00	0.00	-84.76
	312	2	16.89	-17.45	0.00	0.00	0.00	0.00
		7	-16.14	20.49	0.00	0.00	0.00	-87.89
	313	2	17.43	-17.55	0.00	0.00	0.00	0.00
		7	-16.68	20.59	0.00	0.00	0.00	-88.34

MEMBER END FORCES STRUCTURE TYPE = SPACE

ALL UNITS ARE -- KIP FEET (LOCAL)

MEMBER	LOAD	JT	AXIAL	SHEAR-Y	SHEAR-Z	TORSION	MOM-Y	MOM-Z
	314	2	18.03	-17.51	0.00	0.00	0.00	0.00
		7	-17.28	20.54	0.00	0.00	0.00	-88.13
	315	2	17.60	-17.26	0.00	0.00	0.00	0.00
		7	-16.85	20.30	0.00	0.00	0.00	-87.00
	400	2	12.44	-12.03	0.00	0.00	0.00	0.00
		7	-11.25	12.37	0.00	0.00	0.00	-55.96
	401	2	12.55	-12.27	0.00	0.00	0.00	0.00
		7	-11.35	12.60	0.00	0.00	0.00	-57.03
	402	2	12.65	-12.48	0.00	0.00	0.00	0.00
		7	-11.45	12.81	0.00	0.00	0.00	-58.00
	403	2	12.75	-12.66	0.00	0.00	0.00	0.00
		7	-11.55	12.99	0.00	0.00	0.00	-58.83
	404	2	12.81	-12.76	0.00	0.00	0.00	0.00
		7	-11.61	13.09	0.00	0.00	0.00	-59.30
	405	2	13.18	-13.52	0.00	0.00	0.00	0.00
		7	-11.99	13.86	0.00	0.00	0.00	-62.82
	406	2	13.68	-14.50	0.00	0.00	0.00	0.00
		7	-12.48	14.83	0.00	0.00	0.00	-67.30
	407	2	14.15	-15.33	0.00	0.00	0.00	0.00
		7	-12.95	15.66	0.00	0.00	0.00	-71.12
	408	2	14.48	-15.79	0.00	0.00	0.00	0.00
		7	-13.28	16.12	0.00	0.00	0.00	-73.24
	409	2	14.90	-16.29	0.00	0.00	0.00	0.00
		7	-13.70	16.62	0.00	0.00	0.00	-75.53
	410	2	15.71	-17.53	0.00	0.00	0.00	0.00
		7	-14.51	17.86	0.00	0.00	0.00	-81.27
	411	2	16.47	-18.47	0.00	0.00	0.00	0.00
		7	-15.27	18.80	0.00	0.00	0.00	-85.60
	412	2	17.17	-19.15	0.00	0.00	0.00	0.00
		7	-15.97	19.48	0.00	0.00	0.00	-88.73
	413	2	17.71	-19.25	0.00	0.00	0.00	0.00
		7	-16.51	19.58	0.00	0.00	0.00	-89.18
	414	2	18.31	-19.20	0.00	0.00	0.00	0.00
		7	-17.11	19.54	0.00	0.00	0.00	-88.98
	415	2	17.88	-18.96	0.00	0.00	0.00	0.00
		7	-16.69	19.29	0.00	0.00	0.00	-87.84
	3000	2	12.24	-10.52	0.00	0.00	0.00	0.00
		7	-11.49	13.55	0.00	0.00	0.00	-55.94
	3001	2	12.57	-11.24	0.00	0.00	0.00	0.00
		7	-11.82	14.28	0.00	0.00	0.00	-59.29
	3002	2	13.22	-12.66	0.00	0.00	0.00	0.00
		7	-12.47	15.69	0.00	0.00	0.00	-65.80
	3003	2	13.85	-13.90	0.00	0.00	0.00	0.00
		7	-13.10	16.94	0.00	0.00	0.00	-71.54
	3004	2	14.36	-14.82	0.00	0.00	0.00	0.00
		7	-13.60	17.86	0.00	0.00	0.00	-75.77

MEMBER END FORCES STRUCTURE TYPE = SPACE

ALL UNITS ARE -- KIP FEET (LOCAL)

MEMBER	LOAD	JT	AXIAL	SHEAR-Y	SHEAR-Z	TORSION	MOM-Y	MOM-Z
	3005	2	14.83	-15.51	0.00	0.00	0.00	0.00
		7	-14.07	18.55	0.00	0.00	0.00	-78.96
	3006	2	15.35	-16.12	0.00	0.00	0.00	0.00
		7	-14.60	19.16	0.00	0.00	0.00	-81.74
	3007	2	15.83	-16.45	0.00	0.00	0.00	0.00
		7	-15.07	19.49	0.00	0.00	0.00	-83.28
	3008	2	16.26	-16.52	0.00	0.00	0.00	0.00
		7	-15.51	19.55	0.00	0.00	0.00	-83.57
	3009	2	16.65	-16.31	0.00	0.00	0.00	0.00
		7	-15.89	19.35	0.00	0.00	0.00	-82.62
	4000	2	12.52	-12.21	0.00	0.00	0.00	0.00
		7	-11.32	12.55	0.00	0.00	0.00	-56.78
	4001	2	12.85	-12.94	0.00	0.00	0.00	0.00
		7	-11.65	13.27	0.00	0.00	0.00	-60.13
	4002	2	13.50	-14.35	0.00	0.00	0.00	0.00
		7	-12.30	14.69	0.00	0.00	0.00	-66.64
	4003	2	14.13	-15.60	0.00	0.00	0.00	0.00
		7	-12.93	15.93	0.00	0.00	0.00	-72.39
	4004	2	14.64	-16.52	0.00	0.00	0.00	0.00
		7	-13.44	16.85	0.00	0.00	0.00	-76.61
	4005	2	15.11	-17.21	0.00	0.00	0.00	0.00
		7	-13.91	17.55	0.00	0.00	0.00	-79.81
	4006	2	15.63	-17.82	0.00	0.00	0.00	0.00
		7	-14.43	18.15	0.00	0.00	0.00	-82.59
	4007	2	16.11	-18.15	0.00	0.00	0.00	0.00
		7	-14.91	18.48	0.00	0.00	0.00	-84.12
	4008	2	16.54	-18.21	0.00	0.00	0.00	0.00
		7	-15.34	18.55	0.00	0.00	0.00	-84.42
	4009	2	16.93	-18.01	0.00	0.00	0.00	0.00
		7	-15.73	18.34	0.00	0.00	0.00	-83.47
3	300	3	16.18	8.07	0.00	0.00	0.00	50.71
		4	-15.56	-3.08	0.00	0.00	0.00	-5.17
	301	3	16.41	7.97	0.00	0.00	0.00	51.88
		4	-15.79	-2.98	0.00	0.00	0.00	-4.30
	302	3	16.63	7.88	0.00	0.00	0.00	52.95
		4	-16.01	-2.89	0.00	0.00	0.00	-3.31
	303	3	16.81	7.79	0.00	0.00	0.00	53.88
		4	-16.19	-2.80	0.00	0.00	0.00	-2.15
	304	3	16.92	7.73	0.00	0.00	0.00	54.42
		4	-16.41	-3.71	0.00	0.00	0.00	-3.19
	305	3	18.18	11.26	0.00	0.00	0.00	54.40
		4	-17.19	-3.37	0.00	0.00	0.00	-2.40
	306	3	19.17	10.80	0.00	0.00	0.00	59.37
		4	-18.18	-2.91	0.00	0.00	0.00	0.11

MEMBER END FORCES STRUCTURE TYPE = SPACE

ALL UNITS ARE -- KIP FEET (LOCAL)

MEMBER	LOAD	JT	AXIAL	SHEAR-Y	SHEAR-Z	TORSION	MOM-Y	MOM-Z
	307	3	20.02	10.36	0.00	0.00	0.00	63.70
		4	-19.03	-2.47	0.00	0.00	0.00	3.41
	308	3	20.49	10.05	0.00	0.00	0.00	66.22
		4	-19.99	-6.03	0.00	0.00	0.00	5.95
	309	3	21.01	9.65	0.00	0.00	0.00	69.05
		4	-20.50	-5.63	0.00	0.00	0.00	-0.49
	310	3	22.77	12.76	0.00	0.00	0.00	71.82
		4	-21.78	-4.87	0.00	0.00	0.00	-2.40
	311	3	23.74	12.03	0.00	0.00	0.00	77.11
		4	-22.75	-4.14	0.00	0.00	0.00	-2.61
	312	3	24.44	11.36	0.00	0.00	0.00	81.19
		4	-23.46	-3.48	0.00	0.00	0.00	-1.12
	313	3	24.56	10.83	0.00	0.00	0.00	82.53
		4	-24.06	-6.81	0.00	0.00	0.00	-3.30
	314	3	24.54	10.23	0.00	0.00	0.00	83.37
		4	-24.04	-6.21	0.00	0.00	0.00	-9.57
	315	3	24.16	9.67	0.00	0.00	0.00	82.57
		4	-23.65	-5.66	0.00	0.00	0.00	-13.78
	400	3	15.17	8.19	0.00	0.00	0.00	51.64
		4	-14.54	-3.21	0.00	0.00	0.00	-4.95
	401	3	15.40	8.10	0.00	0.00	0.00	52.80
		4	-14.78	-3.11	0.00	0.00	0.00	-4.09
	402	3	15.62	8.00	0.00	0.00	0.00	53.87
		4	-15.00	-3.02	0.00	0.00	0.00	-3.09
	403	3	15.80	7.91	0.00	0.00	0.00	54.80
		4	-15.18	-2.93	0.00	0.00	0.00	-1.93
	404	3	15.91	7.85	0.00	0.00	0.00	55.34
		4	-15.40	-3.84	0.00	0.00	0.00	-2.98
	405	3	17.17	11.38	0.00	0.00	0.00	55.32
		4	-16.18	-3.49	0.00	0.00	0.00	-2.19
	406	3	18.16	10.92	0.00	0.00	0.00	60.30
		4	-17.17	-3.04	0.00	0.00	0.00	0.32
	407	3	19.01	10.48	0.00	0.00	0.00	64.63
		4	-18.02	-2.60	0.00	0.00	0.00	3.63
	408	3	19.48	10.17	0.00	0.00	0.00	67.15
		4	-18.98	-6.16	0.00	0.00	0.00	6.17
	409	3	20.00	9.77	0.00	0.00	0.00	69.97
		4	-19.49	-5.76	0.00	0.00	0.00	-0.27
	410	3	21.76	12.88	0.00	0.00	0.00	72.75
		4	-20.77	-4.99	0.00	0.00	0.00	-2.18
	411	3	22.72	12.16	0.00	0.00	0.00	78.04
		4	-21.74	-4.27	0.00	0.00	0.00	-2.39
	412	3	23.43	11.49	0.00	0.00	0.00	82.11
		4	-22.45	-3.60	0.00	0.00	0.00	-0.90
	413	3	23.55	10.96	0.00	0.00	0.00	83.45
		4	-23.05	-6.94	0.00	0.00	0.00	-3.09

MEMBER END FORCES STRUCTURE TYPE = SPACE

ALL UNITS ARE -- KIP FEET (LOCAL)

MEMBER	LOAD	JT	AXIAL	SHEAR-Y	SHEAR-Z	TORSION	MOM-Y	MOM-Z
	414	3	23.53	10.35	0.00	0.00	0.00	84.29
		4	-23.03	-6.34	0.00	0.00	0.00	-9.35
	415	3	23.15	9.80	0.00	0.00	0.00	83.50
		4	-22.64	-5.78	0.00	0.00	0.00	-13.56
	3000	3	16.62	10.06	0.00	0.00	0.00	49.53
		4	-15.74	-3.01	0.00	0.00	0.00	-4.62
	3001	3	17.36	9.75	0.00	0.00	0.00	53.18
		4	-16.48	-2.71	0.00	0.00	0.00	-1.91
	3002	3	19.17	12.18	0.00	0.00	0.00	57.24
		4	-17.91	-2.11	0.00	0.00	0.00	3.77
	3003	3	20.44	11.61	0.00	0.00	0.00	63.60
		4	-19.19	-1.54	0.00	0.00	0.00	10.37
	3004	3	21.38	11.14	0.00	0.00	0.00	68.36
		4	-20.50	-4.09	0.00	0.00	0.00	10.54
	3005	3	22.09	10.69	0.00	0.00	0.00	72.11
		4	-21.59	-6.68	0.00	0.00	0.00	5.90
	3006	3	22.72	10.20	0.00	0.00	0.00	75.57
		4	-22.21	-6.18	0.00	0.00	0.00	-2.05
	3007	3	23.07	9.73	0.00	0.00	0.00	77.80
		4	-22.57	-5.71	0.00	0.00	0.00	-8.47
	3008	3	23.15	9.30	0.00	0.00	0.00	78.81
		4	-22.65	-5.28	0.00	0.00	0.00	-13.37
	3009	3	22.96	8.91	0.00	0.00	0.00	78.60
		4	-22.46	-4.89	0.00	0.00	0.00	-16.73
	4000	3	15.61	10.18	0.00	0.00	0.00	50.45
		4	-14.73	-3.14	0.00	0.00	0.00	-4.40
	4001	3	16.35	9.88	0.00	0.00	0.00	54.10
		4	-15.47	-2.84	0.00	0.00	0.00	-1.69
	4002	3	18.16	12.31	0.00	0.00	0.00	58.16
		4	-16.90	-2.24	0.00	0.00	0.00	3.99
	4003	3	19.43	11.73	0.00	0.00	0.00	64.53
		4	-18.17	-1.66	0.00	0.00	0.00	10.59
	4004	3	20.37	11.26	0.00	0.00	0.00	69.28
		4	-19.49	-4.22	0.00	0.00	0.00	10.76
	4005	3	21.08	10.82	0.00	0.00	0.00	73.03
		4	-20.58	-6.80	0.00	0.00	0.00	6.12
	4006	3	21.71	10.32	0.00	0.00	0.00	76.49
		4	-21.20	-6.31	0.00	0.00	0.00	-1.83
	4007	3	22.06	9.86	0.00	0.00	0.00	78.72
		4	-21.56	-5.84	0.00	0.00	0.00	-8.26
	4008	3	22.14	9.43	0.00	0.00	0.00	79.73
		4	-21.64	-5.41	0.00	0.00	0.00	-13.15
	4009	3	21.95	9.03	0.00	0.00	0.00	79.52
		4	-21.45	-5.02	0.00	0.00	0.00	-16.51
4	300	4	15.05	4.99	0.00	0.00	0.00	5.17
		5	-15.05	0.02	0.00	0.00	0.00	24.62

MEMBER END FORCES STRUCTURE TYPE = SPACE

ALL UNITS ARE -- KIP FEET (LOCAL)

MEMBER	LOAD	JT	AXIAL	SHEAR-Y	SHEAR-Z	TORSION	MOM-Y	MOM-Z
301		4	15.30	4.92	0.00	0.00	0.00	4.30
		5	-15.30	0.09	0.00	0.00	0.00	24.69
302		4	15.52	4.85	0.00	0.00	0.00	3.31
		5	-15.52	0.15	0.00	0.00	0.00	24.89
303		4	15.72	4.79	0.00	0.00	0.00	2.15
		5	-15.72	0.22	0.00	0.00	0.00	25.26
304		4	15.83	5.72	0.00	0.00	0.00	3.19
		5	-15.83	0.27	0.00	0.00	0.00	25.65
305		4	16.64	5.47	0.00	0.00	0.00	2.40
		5	-16.64	0.51	0.00	0.00	0.00	26.45
306		4	17.68	5.14	0.00	0.00	0.00	-0.11
		5	-17.68	0.84	0.00	0.00	0.00	27.91
307		4	18.58	4.81	0.00	0.00	0.00	-3.41
		5	-18.58	1.17	0.00	0.00	0.00	30.17
308		4	19.09	8.46	0.00	0.00	0.00	-5.95
		5	-19.09	0.45	0.00	0.00	0.00	30.81
309		4	19.65	8.13	0.00	0.00	0.00	0.49
		5	-19.65	0.78	0.00	0.00	0.00	32.08
310		4	21.01	7.53	0.00	0.00	0.00	2.40
		5	-21.01	1.38	0.00	0.00	0.00	34.69
311		4	22.06	6.93	0.00	0.00	0.00	2.61
		5	-22.06	1.97	0.00	0.00	0.00	39.01
312		4	22.84	6.36	0.00	0.00	0.00	1.12
		5	-22.84	-1.35	0.00	0.00	0.00	45.12
313		4	23.03	9.74	0.00	0.00	0.00	3.30
		5	-23.03	-0.83	0.00	0.00	0.00	40.81
314		4	23.08	9.14	0.00	0.00	0.00	9.57
		5	-23.08	-0.23	0.00	0.00	0.00	39.06
315		4	22.77	8.55	0.00	0.00	0.00	13.78
		5	-22.77	0.36	0.00	0.00	0.00	39.38
400		4	14.03	4.99	0.00	0.00	0.00	4.95
		5	-14.03	0.02	0.00	0.00	0.00	24.83
401		4	14.28	4.92	0.00	0.00	0.00	4.09
		5	-14.28	0.09	0.00	0.00	0.00	24.91
402		4	14.51	4.85	0.00	0.00	0.00	3.09
		5	-14.51	0.15	0.00	0.00	0.00	25.11
403		4	14.70	4.79	0.00	0.00	0.00	1.93
		5	-14.70	0.22	0.00	0.00	0.00	25.48
404		4	14.81	5.72	0.00	0.00	0.00	2.98
		5	-14.81	0.27	0.00	0.00	0.00	25.87
405		4	15.62	5.47	0.00	0.00	0.00	2.19
		5	-15.62	0.51	0.00	0.00	0.00	26.66
406		4	16.66	5.14	0.00	0.00	0.00	-0.32
		5	-16.66	0.84	0.00	0.00	0.00	28.13
407		4	17.56	4.81	0.00	0.00	0.00	-3.63
		5	-17.56	1.17	0.00	0.00	0.00	30.39

MEMBER END FORCES STRUCTURE TYPE = SPACE

ALL UNITS ARE -- KIP FEET (LOCAL)

MEMBER	LOAD	JT	AXIAL	SHEAR-Y	SHEAR-Z	TORSION	MOM-Y	MOM-Z
	408	4	18.07	8.46	0.00	0.00	0.00	-6.17
		5	-18.07	0.45	0.00	0.00	0.00	31.03
	409	4	18.63	8.13	0.00	0.00	0.00	0.27
		5	-18.63	0.78	0.00	0.00	0.00	32.30
	410	4	19.99	7.53	0.00	0.00	0.00	2.18
		5	-19.99	1.38	0.00	0.00	0.00	34.90
	411	4	21.04	6.93	0.00	0.00	0.00	2.39
		5	-21.04	1.97	0.00	0.00	0.00	39.22
	412	4	21.83	6.36	0.00	0.00	0.00	0.90
		5	-21.83	-1.35	0.00	0.00	0.00	45.34
	413	4	22.01	9.74	0.00	0.00	0.00	3.09
		5	-22.01	-0.83	0.00	0.00	0.00	41.03
	414	4	22.06	9.14	0.00	0.00	0.00	9.35
		5	-22.06	-0.23	0.00	0.00	0.00	39.28
	415	4	21.75	8.55	0.00	0.00	0.00	13.56
		5	-21.75	0.36	0.00	0.00	0.00	39.60
	3000	4	15.24	4.94	0.00	0.00	0.00	4.62
		5	-15.24	0.07	0.00	0.00	0.00	24.60
	3001	4	16.01	4.73	0.00	0.00	0.00	1.91
		5	-16.01	0.28	0.00	0.00	0.00	24.83
	3002	4	17.51	4.32	0.00	0.00	0.00	-3.77
		5	-17.51	0.69	0.00	0.00	0.00	25.54
	3003	4	18.85	3.91	0.00	0.00	0.00	-10.37
		5	-18.85	1.10	0.00	0.00	0.00	27.18
	3004	4	19.83	6.60	0.00	0.00	0.00	-10.54
		5	-19.83	1.45	0.00	0.00	0.00	29.37
	3005	4	20.60	9.30	0.00	0.00	0.00	-5.90
		5	-20.60	1.81	0.00	0.00	0.00	32.83
	3006	4	21.28	8.89	0.00	0.00	0.00	2.05
		5	-21.28	2.22	0.00	0.00	0.00	38.18
	3007	4	21.68	8.47	0.00	0.00	0.00	8.47
		5	-21.68	2.64	0.00	0.00	0.00	45.06
	3008	4	21.82	8.05	0.00	0.00	0.00	13.37
		5	-21.82	0.01	0.00	0.00	0.00	47.24
	3009	4	21.68	7.64	0.00	0.00	0.00	16.73
		5	-21.68	-2.63	0.00	0.00	0.00	44.85
	4000	4	14.22	4.94	0.00	0.00	0.00	4.40
		5	-14.22	0.07	0.00	0.00	0.00	24.82
	4001	4	14.99	4.73	0.00	0.00	0.00	1.69
		5	-14.99	0.28	0.00	0.00	0.00	25.05
	4002	4	16.50	4.32	0.00	0.00	0.00	-3.99
		5	-16.50	0.69	0.00	0.00	0.00	25.76
	4003	4	17.83	3.91	0.00	0.00	0.00	-10.59
		5	-17.83	1.10	0.00	0.00	0.00	27.40
	4004	4	18.82	6.60	0.00	0.00	0.00	-10.76
		5	-18.82	1.45	0.00	0.00	0.00	29.58

MEMBER END FORCES STRUCTURE TYPE = SPACE

ALL UNITS ARE -- KIP FEET (LOCAL)

MEMBER	LOAD	JT	AXIAL	SHEAR-Y	SHEAR-Z	TORSION	MOM-Y	MOM-Z
	4005	4	19.58	9.30	0.00	0.00	0.00	-6.12
		5	-19.58	1.81	0.00	0.00	0.00	33.05
	4006	4	20.26	8.89	0.00	0.00	0.00	1.83
		5	-20.26	2.22	0.00	0.00	0.00	38.40
	4007	4	20.67	8.47	0.00	0.00	0.00	8.26
		5	-20.67	2.64	0.00	0.00	0.00	45.27
	4008	4	20.80	8.05	0.00	0.00	0.00	13.15
		5	-20.80	0.01	0.00	0.00	0.00	47.46
	4009	4	20.66	7.64	0.00	0.00	0.00	16.51
		5	-20.66	-2.63	0.00	0.00	0.00	45.07
5	300	6	15.05	5.03	0.00	0.00	0.00	5.70
		5	-15.05	-0.02	0.00	0.00	0.00	24.62
	301	6	15.30	5.10	0.00	0.00	0.00	6.42
		5	-15.30	-0.09	0.00	0.00	0.00	24.69
	302	6	15.52	5.16	0.00	0.00	0.00	7.02
		5	-15.52	-0.15	0.00	0.00	0.00	24.89
	303	6	15.72	5.23	0.00	0.00	0.00	7.44
		5	-15.72	-0.22	0.00	0.00	0.00	25.26
	304	6	15.83	5.28	0.00	0.00	0.00	7.60
		5	-15.83	-0.27	0.00	0.00	0.00	25.65
	305	6	16.64	5.52	0.00	0.00	0.00	9.73
		5	-16.64	-0.51	0.00	0.00	0.00	26.45
	306	6	17.68	5.85	0.00	0.00	0.00	12.23
		5	-17.68	-0.84	0.00	0.00	0.00	27.91
	307	6	18.58	6.18	0.00	0.00	0.00	13.94
		5	-18.58	-1.17	0.00	0.00	0.00	30.17
	308	6	19.09	6.43	0.00	0.00	0.00	14.30
		5	-19.09	-0.45	0.00	0.00	0.00	30.81
	309	6	19.65	6.76	0.00	0.00	0.00	14.11
		5	-19.65	-0.78	0.00	0.00	0.00	32.08
	310	6	21.01	7.36	0.00	0.00	0.00	15.75
		5	-21.01	-1.38	0.00	0.00	0.00	34.69
	311	6	22.06	7.96	0.00	0.00	0.00	15.67
		5	-22.06	-1.97	0.00	0.00	0.00	39.01
	312	6	22.84	7.56	0.00	0.00	0.00	15.38
		5	-22.84	1.35	0.00	0.00	0.00	45.12
	313	6	23.03	8.07	0.00	0.00	0.00	14.18
		5	-23.03	0.83	0.00	0.00	0.00	40.81
	314	6	23.08	8.67	0.00	0.00	0.00	11.42
		5	-23.08	0.23	0.00	0.00	0.00	39.06
	315	6	22.77	9.27	0.00	0.00	0.00	6.56
		5	-22.77	-0.36	0.00	0.00	0.00	39.38
	400	6	14.03	5.03	0.00	0.00	0.00	5.49
		5	-14.03	-0.02	0.00	0.00	0.00	24.83

MEMBER END FORCES STRUCTURE TYPE = SPACE

ALL UNITS ARE -- KIP FEET (LOCAL)

MEMBER	LOAD	JT	AXIAL	SHEAR-Y	SHEAR-Z	TORSION	MOM-Y	MOM-Z
	401	6	14.28	5.10	0.00	0.00	0.00	6.20
		5	-14.28	-0.09	0.00	0.00	0.00	24.91
	402	6	14.51	5.16	0.00	0.00	0.00	6.80
		5	-14.51	-0.15	0.00	0.00	0.00	25.11
	403	6	14.70	5.23	0.00	0.00	0.00	7.22
		5	-14.70	-0.22	0.00	0.00	0.00	25.48
	404	6	14.81	5.28	0.00	0.00	0.00	7.38
		5	-14.81	-0.27	0.00	0.00	0.00	25.87
	405	6	15.62	5.52	0.00	0.00	0.00	9.51
		5	-15.62	-0.51	0.00	0.00	0.00	26.66
	406	6	16.66	5.85	0.00	0.00	0.00	12.02
		5	-16.66	-0.84	0.00	0.00	0.00	28.13
	407	6	17.56	6.18	0.00	0.00	0.00	13.73
		5	-17.56	-1.17	0.00	0.00	0.00	30.39
	408	6	18.07	6.43	0.00	0.00	0.00	14.09
		5	-18.07	-0.45	0.00	0.00	0.00	31.03
	409	6	18.63	6.76	0.00	0.00	0.00	13.89
		5	-18.63	-0.78	0.00	0.00	0.00	32.30
	410	6	19.99	7.36	0.00	0.00	0.00	15.53
		5	-19.99	-1.38	0.00	0.00	0.00	34.90
	411	6	21.04	7.96	0.00	0.00	0.00	15.45
		5	-21.04	-1.97	0.00	0.00	0.00	39.22
	412	6	21.83	7.56	0.00	0.00	0.00	15.16
		5	-21.83	1.35	0.00	0.00	0.00	45.34
	413	6	22.01	8.07	0.00	0.00	0.00	13.96
		5	-22.01	0.83	0.00	0.00	0.00	41.03
	414	6	22.06	8.67	0.00	0.00	0.00	11.20
		5	-22.06	0.23	0.00	0.00	0.00	39.28
	415	6	21.75	9.27	0.00	0.00	0.00	6.34
		5	-21.75	-0.36	0.00	0.00	0.00	39.60
	3000	6	15.24	5.08	0.00	0.00	0.00	6.29
		5	-15.24	-0.07	0.00	0.00	0.00	24.60
	3001	6	16.01	5.28	0.00	0.00	0.00	8.54
		5	-16.01	-0.28	0.00	0.00	0.00	24.83
	3002	6	17.51	5.70	0.00	0.00	0.00	12.79
		5	-17.51	-0.69	0.00	0.00	0.00	25.54
	3003	6	18.85	6.11	0.00	0.00	0.00	16.11
		5	-18.85	-1.10	0.00	0.00	0.00	27.18
	3004	6	19.83	6.46	0.00	0.00	0.00	18.13
		5	-19.83	-1.45	0.00	0.00	0.00	29.37
	3005	6	20.60	6.81	0.00	0.00	0.00	18.89
		5	-20.60	-1.81	0.00	0.00	0.00	32.83
	3006	6	21.28	7.23	0.00	0.00	0.00	18.54
		5	-21.28	-2.22	0.00	0.00	0.00	38.18
	3007	6	21.68	7.65	0.00	0.00	0.00	16.66
		5	-21.68	-2.64	0.00	0.00	0.00	45.06

MEMBER END FORCES STRUCTURE TYPE = SPACE

ALL UNITS ARE -- KIP FEET (LOCAL)

MEMBER	LOAD	JT	AXIAL	SHEAR-Y	SHEAR-Z	TORSION	MOM-Y	MOM-Z
	3008	6	21.82	8.06	0.00	0.00	0.00	13.26
		5	-21.82	-0.01	0.00	0.00	0.00	47.24
	3009	6	21.68	8.48	0.00	0.00	0.00	8.32
		5	-21.68	2.63	0.00	0.00	0.00	44.85
	4000	6	14.22	5.08	0.00	0.00	0.00	6.07
		5	-14.22	-0.07	0.00	0.00	0.00	24.82
	4001	6	14.99	5.28	0.00	0.00	0.00	8.32
		5	-14.99	-0.28	0.00	0.00	0.00	25.05
	4002	6	16.50	5.70	0.00	0.00	0.00	12.57
		5	-16.50	-0.69	0.00	0.00	0.00	25.76
	4003	6	17.83	6.11	0.00	0.00	0.00	15.90
		5	-17.83	-1.10	0.00	0.00	0.00	27.40
	4004	6	18.82	6.46	0.00	0.00	0.00	17.92
		5	-18.82	-1.45	0.00	0.00	0.00	29.58
	4005	6	19.58	6.81	0.00	0.00	0.00	18.67
		5	-19.58	-1.81	0.00	0.00	0.00	33.05
	4006	6	20.26	7.23	0.00	0.00	0.00	18.32
		5	-20.26	-2.22	0.00	0.00	0.00	38.40
	4007	6	20.67	7.65	0.00	0.00	0.00	16.45
		5	-20.67	-2.64	0.00	0.00	0.00	45.27
	4008	6	20.80	8.06	0.00	0.00	0.00	13.04
		5	-20.80	-0.01	0.00	0.00	0.00	47.46
	4009	6	20.66	8.48	0.00	0.00	0.00	8.10
		5	-20.66	2.63	0.00	0.00	0.00	45.07
6	300	7	16.06	7.14	0.00	0.00	0.00	51.64
		6	-15.56	-3.13	0.00	0.00	0.00	-5.70
	301	7	16.32	7.18	0.00	0.00	0.00	52.68
		6	-15.81	-3.16	0.00	0.00	0.00	-6.42
	302	7	16.55	7.22	0.00	0.00	0.00	53.61
		6	-16.04	-3.20	0.00	0.00	0.00	-7.02
	303	7	16.75	7.26	0.00	0.00	0.00	54.41
		6	-16.24	-3.24	0.00	0.00	0.00	-7.44
	304	7	16.86	7.29	0.00	0.00	0.00	54.86
		6	-16.36	-3.27	0.00	0.00	0.00	-7.60
	305	7	17.70	7.43	0.00	0.00	0.00	58.26
		6	-17.20	-3.41	0.00	0.00	0.00	-9.73
	306	7	18.77	7.63	0.00	0.00	0.00	62.56
		6	-18.27	-3.61	0.00	0.00	0.00	-12.23
	307	7	19.71	7.85	0.00	0.00	0.00	66.24
		6	-19.20	-3.83	0.00	0.00	0.00	-13.94
	308	7	20.24	8.03	0.00	0.00	0.00	68.26
		6	-19.74	-4.01	0.00	0.00	0.00	-14.30
	309	7	20.84	8.29	0.00	0.00	0.00	70.42
		6	-20.33	-4.27	0.00	0.00	0.00	-14.11

MEMBER END FORCES STRUCTURE TYPE = SPACE

ALL UNITS ARE -- KIP FEET (LOCAL)

MEMBER	LOAD	JT	AXIAL	SHEAR-Y	SHEAR-Z	TORSION	MOM-Y	MOM-Z
	310	7	22.26	8.72	0.00	0.00	0.00	75.89
		6	-21.76	-4.70	0.00	0.00	0.00	-15.75
	311	7	23.38	9.18	0.00	0.00	0.00	79.99
		6	-22.88	-5.16	0.00	0.00	0.00	-15.67
	312	7	24.23	9.65	0.00	0.00	0.00	82.91
		6	-23.61	-4.67	0.00	0.00	0.00	-15.38
	313	7	24.48	10.14	0.00	0.00	0.00	83.22
		6	-23.85	-5.16	0.00	0.00	0.00	-14.18
	314	7	24.60	10.73	0.00	0.00	0.00	82.86
		6	-23.98	-5.74	0.00	0.00	0.00	-11.42
	315	7	24.25	10.39	0.00	0.00	0.00	81.85
		6	-23.74	-6.38	0.00	0.00	0.00	-6.56
	400	7	15.05	7.27	0.00	0.00	0.00	52.57
		6	-14.55	-3.25	0.00	0.00	0.00	-5.49
	401	7	15.31	7.30	0.00	0.00	0.00	53.60
		6	-14.80	-3.29	0.00	0.00	0.00	-6.20
	402	7	15.54	7.34	0.00	0.00	0.00	54.54
		6	-15.03	-3.32	0.00	0.00	0.00	-6.80
	403	7	15.74	7.38	0.00	0.00	0.00	55.34
		6	-15.23	-3.37	0.00	0.00	0.00	-7.22
	404	7	15.85	7.42	0.00	0.00	0.00	55.78
		6	-15.35	-3.40	0.00	0.00	0.00	-7.38
	405	7	16.69	7.56	0.00	0.00	0.00	59.18
		6	-16.19	-3.54	0.00	0.00	0.00	-9.51
	406	7	17.76	7.76	0.00	0.00	0.00	63.49
		6	-17.26	-3.74	0.00	0.00	0.00	-12.02
	407	7	18.69	7.97	0.00	0.00	0.00	67.16
		6	-18.19	-3.95	0.00	0.00	0.00	-13.73
	408	7	19.23	8.16	0.00	0.00	0.00	69.18
		6	-18.73	-4.14	0.00	0.00	0.00	-14.09
	409	7	19.83	8.42	0.00	0.00	0.00	71.34
		6	-19.32	-4.40	0.00	0.00	0.00	-13.89
	410	7	21.25	8.84	0.00	0.00	0.00	76.82
		6	-20.75	-4.82	0.00	0.00	0.00	-15.53
	411	7	22.37	9.30	0.00	0.00	0.00	80.91
		6	-21.87	-5.29	0.00	0.00	0.00	-15.45
	412	7	23.22	9.78	0.00	0.00	0.00	83.84
		6	-22.59	-4.79	0.00	0.00	0.00	-15.16
	413	7	23.46	10.27	0.00	0.00	0.00	84.15
		6	-22.84	-5.28	0.00	0.00	0.00	-13.96
	414	7	23.59	10.86	0.00	0.00	0.00	83.79
		6	-22.97	-5.87	0.00	0.00	0.00	-11.20
	415	7	23.24	10.52	0.00	0.00	0.00	82.77
		6	-22.73	-6.50	0.00	0.00	0.00	-6.34
	3000	7	16.26	7.17	0.00	0.00	0.00	52.44
		6	-15.75	-3.15	0.00	0.00	0.00	-6.29

MEMBER END FORCES STRUCTURE TYPE = SPACE

ALL UNITS ARE -- KIP FEET (LOCAL)

MEMBER	LOAD	JT	AXIAL	SHEAR-Y	SHEAR-Z	TORSION	MOM-Y	MOM-Z
3001		7	17.05	7.28	0.00	0.00	0.00	55.68
		6	-16.55	-3.26	0.00	0.00	0.00	-8.54
3002		7	18.59	7.50	0.00	0.00	0.00	61.96
		6	-18.09	-3.48	0.00	0.00	0.00	-12.79
3003		7	19.96	7.75	0.00	0.00	0.00	67.49
		6	-19.46	-3.73	0.00	0.00	0.00	-16.11
3004		7	20.98	7.97	0.00	0.00	0.00	71.55
		6	-20.48	-3.95	0.00	0.00	0.00	-18.13
3005		7	21.78	8.23	0.00	0.00	0.00	74.60
		6	-21.28	-4.21	0.00	0.00	0.00	-18.89
3006		7	22.51	8.55	0.00	0.00	0.00	77.22
		6	-22.01	-4.54	0.00	0.00	0.00	-18.54
3007		7	22.97	8.92	0.00	0.00	0.00	78.62
		6	-22.47	-4.90	0.00	0.00	0.00	-16.66
3008		7	23.15	9.31	0.00	0.00	0.00	78.80
		6	-22.65	-5.30	0.00	0.00	0.00	-13.26
3009		7	23.06	9.74	0.00	0.00	0.00	77.76
		6	-22.56	-5.73	0.00	0.00	0.00	-8.32
4000		7	15.25	7.29	0.00	0.00	0.00	53.37
		6	-14.74	-3.27	0.00	0.00	0.00	-6.07
4001		7	16.04	7.40	0.00	0.00	0.00	56.60
		6	-15.53	-3.38	0.00	0.00	0.00	-8.32
4002		7	17.58	7.63	0.00	0.00	0.00	62.88
		6	-17.07	-3.61	0.00	0.00	0.00	-12.57
4003		7	18.95	7.87	0.00	0.00	0.00	68.42
		6	-18.45	-3.85	0.00	0.00	0.00	-15.90
4004		7	19.97	8.10	0.00	0.00	0.00	72.47
		6	-19.47	-4.08	0.00	0.00	0.00	-17.92
4005		7	20.77	8.35	0.00	0.00	0.00	75.52
		6	-20.27	-4.33	0.00	0.00	0.00	-18.67
4006		7	21.50	8.68	0.00	0.00	0.00	78.15
		6	-21.00	-4.66	0.00	0.00	0.00	-18.32
4007		7	21.96	9.04	0.00	0.00	0.00	79.55
		6	-21.45	-5.03	0.00	0.00	0.00	-16.45
4008		7	22.14	9.44	0.00	0.00	0.00	79.72
		6	-21.64	-5.42	0.00	0.00	0.00	-13.04
4009		7	22.05	9.87	0.00	0.00	0.00	78.68
		6	-21.55	-5.85	0.00	0.00	0.00	-8.10

********** END OF LATEST ANALYSIS RESULT **********

```
471. ***
472. LOAD LIST 100 TO 115 200 TO 215 1000 TO 1009 2000 TO 2009
473. PRINT FORCE ENVELOPE NSECTION 4 LIST 3 6
```

MEMBER FORCE ENVELOPE

ALL UNITS ARE KIP FEET

MEMB	DISTANCE		FY	LD	MZ	LD	FZ	LD	MY	LD
3	0.00	MAX	19.77	210	127.63	214	0.00	2009	0.00	2009
		MIN	10.77	104	66.93	1000	0.00	2009	0.00	2009
	0.75	MAX	19.28	210	116.26	214	0.00	2009	0.00	2009
		MIN	9.06	1000	59.93	1000	0.00	2009	0.00	2009
	1.50	MAX	18.80	210	105.33	215	0.00	2009	0.00	2009
		MIN	8.58	1000	52.50	1001	0.00	2009	0.00	2009
	2.26	MAX	17.06	211	95.42	215	0.00	2009	0.00	2009
		MIN	8.10	1000	41.51	1002	0.00	2009	0.00	2009
	3.01	MAX	16.59	211	85.86	215	0.00	2009	0.00	2009
		MIN	7.11	1001	32.79	1002	0.00	2009	0.00	2009
	3.76	MAX	16.13	211	76.66	215	0.00	2009	0.00	2009
		MIN	6.64	1001	24.42	1002	0.00	2009	0.00	2009
	4.51	MAX	15.67	211	67.80	215	0.00	2009	0.00	2009
		MIN	6.18	1001	16.39	1002	0.00	2009	0.00	2009
	5.27	MAX	14.04	212	59.41	2009	0.00	2009	0.00	2009
		MIN	5.73	1001	8.71	1002	0.00	2009	0.00	2009
	6.02	MAX	13.60	212	52.24	2009	0.00	2009	0.00	2009
		MIN	4.24	1002	1.47	1002	0.00	2009	0.00	2009
	6.77	MAX	13.15	212	45.41	2009	0.00	2009	0.00	2009
		MIN	3.79	1002	-3.57	1003	0.00	2009	0.00	2009
	7.52	MAX	12.71	212	38.96	1009	0.00	2009	0.00	2009
		MIN	3.35	1002	-9.53	2003	0.00	2009	0.00	2009
	8.28	MAX	11.34	213	32.95	1009	0.00	2009	0.00	2009
		MIN	2.92	1002	-16.02	2004	0.00	2009	0.00	2009
	9.03	MAX	10.91	213	27.26	1009	0.00	2009	0.00	2009
		MIN	1.48	1003	-20.82	2004	0.00	2009	0.00	2009

MAX/MIN FORCE VALUES FOR MEMB 3, AMONGST ALL SECT LOCATIONS

	FY/ FZ	DIST DIST	LD LD	MZ/ MY	DIST DIST	LD LD	FX	DIST	LD
MAX.	19.77	0.00	210	127.63	0.00	214			
	0.00	0.00	100	0.00	0.00	100	37.07 C	0.00	113
MIN.	1.48	9.03	1003	-20.82	9.03	2004			
	0.00	9.03	2009	0.00	9.03	2009	19.89 C	9.03	200

6	0.00	MAX	16.22	214	127.37	213	0.00	2009	0.00	2009
		MIN	9.74	100	70.63	100	0.00	2009	0.00	2009
	0.75	MAX	15.74	214	116.22	212	0.00	2009	0.00	2009
		MIN	9.26	100	63.48	100	0.00	2009	0.00	2009

1.50	MAX	15.26	214	105.98	212	0.00	2009	0.00	2009
	MIN	8.78	100	56.70	100	0.00	2009	0.00	2009
2.26	MAX	14.19	215	96.10	212	0.00	2009	0.00	2009
	MIN	8.30	100	50.27	100	0.00	2009	0.00	2009
3.01	MAX	13.72	215	86.57	212	0.00	2009	0.00	2009
	MIN	7.83	100	44.20	100	0.00	2009	0.00	2009
3.76	MAX	13.26	215	77.39	212	0.00	2009	0.00	2009
	MIN	7.37	100	38.48	100	0.00	2009	0.00	2009
4.51	MAX	12.80	215	68.56	212	0.00	2009	0.00	2009
	MIN	6.91	100	33.11	100	0.00	2009	0.00	2009
5.27	MAX	12.35	215	60.25	2006	0.00	2009	0.00	2009
	MIN	6.46	100	28.08	100	0.00	2009	0.00	2009
6.02	MAX	11.90	215	53.55	2006	0.00	2009	0.00	2009
	MIN	6.01	100	23.39	100	0.00	2009	0.00	2009
6.77	MAX	11.45	215	47.18	2006	0.00	2009	0.00	2009
	MIN	5.56	100	19.04	100	0.00	2009	0.00	2009
7.52	MAX	11.01	215	41.19	1006	0.00	2009	0.00	2009
	MIN	5.12	100	14.97	200	0.00	2009	0.00	2009
8.28	MAX	10.58	215	35.82	1005	0.00	2009	0.00	2009
	MIN	4.69	100	11.13	200	0.00	2009	0.00	2009
9.03	MAX	10.15	215	31.03	1005	0.00	2009	0.00	2009
	MIN	4.26	100	7.61	200	0.00	2009	0.00	2009

MAX/MIN FORCE VALUES FOR MEMB 6, AMONGST ALL SECT LOCATIONS

	FY/ FZ	DIST DIST	LD LD	MZ/ MY	DIST DIST	LD LD	FX	DIST	LD
MAX.	16.22	0.00	214	127.37	0.00	213			
	0.00	0.00	100	0.00	0.00	100	37.14 C	0.00	114
MIN.	4.26	9.03	100	7.61	9.03	200			
	0.00	9.03	2009	0.00	9.03	2009	19.90 C	9.03	200

********** END OF FORCE ENVELOPE FROM INTERNAL STORAGE **********

474. LOAD LIST 100 TO 115 200 TO 215 1000 TO 1009 2000 TO 2009
475. PRINT FORCE ENVELOPE NSECTION 4 LIST 4 5

MEMBER FORCE ENVELOPE

ALL UNITS ARE KIP FEET

MEMB	DISTANCE		FY	LD	MZ	LD	FZ	LD	MY	LD
4	0.00	MAX	15.14	213	27.26	1009	0.00	2009	0.00	2009
		MIN	4.93	2003	-20.82	2004	0.00	2009	0.00	2009
	1.00	MAX	14.57	213	16.09	1009	0.00	2009	0.00	2009
		MIN	4.35	2003	-30.18	2004	0.00	2009	0.00	2009
	2.00	MAX	12.95	214	5.49	1009	0.00	2009	0.00	2009
		MIN	3.78	2003	-38.97	2004	0.00	2009	0.00	2009
	3.00	MAX	12.38	214	-4.54	1009	0.00	2009	0.00	2009
		MIN	2.60	2004	-42.78	2005	0.00	2009	0.00	2009
	4.00	MAX	11.81	214	-13.99	1009	0.00	2009	0.00	2009
		MIN	2.03	2004	-49.82	2005	0.00	2009	0.00	2009
	5.00	MAX	10.19	215	-19.92	100	0.00	2009	0.00	2009
		MIN	1.46	2004	-56.28	2005	0.00	2009	0.00	2009
	6.00	MAX	9.62	215	-23.60	100	0.00	2009	0.00	2009
		MIN	0.27	2005	-59.89	2006	0.00	2009	0.00	2009
	7.00	MAX	9.05	215	-26.70	100	0.00	2009	0.00	2009
		MIN	-0.30	2005	-64.49	2006	0.00	2009	0.00	2009
	8.00	MAX	7.61	2008	-29.24	100	0.00	2009	0.00	2009
		MIN	-0.87	2005	-68.51	2006	0.00	2009	0.00	2009
	9.00	MAX	7.04	2008	-31.20	100	0.00	2009	0.00	2009
		MIN	-2.17	2006	-70.16	2007	0.00	2009	0.00	2009
	10.00	MAX	6.47	2008	-32.59	100	0.00	2009	0.00	2009
		MIN	-2.75	2006	-72.31	2007	0.00	2009	0.00	2009
	11.00	MAX	5.17	2009	-33.41	100	0.00	2009	0.00	2009
		MIN	-3.32	2006	-73.89	2007	0.00	2009	0.00	2009
	12.00	MAX	4.60	2009	-33.62	1000	0.00	2009	0.00	2009
		MIN	-4.62	2007	-73.59	2008	0.00	2009	0.00	2009

MAX/MIN FORCE VALUES FOR MEMB 4, AMONGST ALL SECT LOCATIONS

	FY/ FZ	DIST DIST	LD LD	MZ/ MY	DIST DIST	LD LD	FX	DIST	LD
MAX.	15.14	0.00	113	27.26	0.00	1009			
	0.00	0.00	100	0.00	0.00	100	34.87 C	0.00	114
MIN.	-4.62	12.00	2007	-73.89	11.00	2007			
	0.00	12.00	2009	0.00	12.00	2009	19.19 C	12.00	200

5	0.00	MAX	14.32	215	31.03	1005	0.00	2009	0.00	2009
		MIN	6.90	200	7.61	200	0.00	2009	0.00	2009
	1.00	MAX	13.74	215	21.30	1005	0.00	2009	0.00	2009
		MIN	6.32	200	-4.92	215	0.00	2009	0.00	2009

2.00	MAX	13.17	215	12.14	1005	0.00	2009	0.00	2009
	MIN	5.75	200	-18.38	215	0.00	2009	0.00	2009
3.00	MAX	11.56	214	4.08	1004	0.00	2009	0.00	2009
	MIN	5.18	200	-30.99	215	0.00	2009	0.00	2009
4.00	MAX	10.99	214	-3.32	1004	0.00	2009	0.00	2009
	MIN	4.61	200	-36.48	215	0.00	2009	0.00	2009
5.00	MAX	10.41	214	-10.15	1004	0.00	2009	0.00	2009
	MIN	4.04	200	-45.33	2009	0.00	2009	0.00	2009
6.00	MAX	9.50	2009	-16.27	1003	0.00	2009	0.00	2009
	MIN	3.02	214	-55.12	2009	0.00	2009	0.00	2009
7.00	MAX	8.22	213	-21.35	1003	0.00	2009	0.00	2009
	MIN	2.45	214	-64.13	2009	0.00	2009	0.00	2009
8.00	MAX	7.65	213	-25.85	1003	0.00	2009	0.00	2009
	MIN	1.87	214	-67.44	2009	0.00	2009	0.00	2009
9.00	MAX	7.06	2008	-29.08	1002	0.00	2009	0.00	2009
	MIN	0.26	213	-70.18	2009	0.00	2009	0.00	2009
10.00	MAX	5.76	2007	-31.72	1002	0.00	2009	0.00	2009
	MIN	-0.32	213	-72.43	2008	0.00	2009	0.00	2009
11.00	MAX	5.19	2007	-33.22	1000	0.00	2009	0.00	2009
	MIN	-4.03	2009	-73.73	2009	0.00	2009	0.00	2009
12.00	MAX	4.62	2007	-33.62	1000	0.00	2009	0.00	2009
	MIN	-4.60	2009	-73.59	2008	0.00	2009	0.00	2009

MAX/MIN FORCE VALUES FOR MEMB 5, AMONGST ALL SECT LOCATIONS

	FY/ FZ	DIST DIST	LD LD	MZ/ MY	DIST DIST	LD LD	FX	DIST	LD
MAX.	14.32	0.00	115	31.03	0.00	1005			
	0.00	0.00	100	0.00	0.00	100	34.87 C	0.00	114
MIN.	-4.60	12.00	2009	-73.73	11.00	2009			
	0.00	12.00	2009	0.00	12.00	2009	19.19 C	12.00	200

********** END OF FORCE ENVELOPE FROM INTERNAL STORAGE **********

476. LOAD LIST 100 TO 115 200 TO 215 1000 TO 1009 2000 TO 2009
477. PRINT FORCE ENVELOPE NSECTION 4 LIST 1 2

MEMBER FORCE ENVELOPE

ALL UNITS ARE KIP FEET

MEMB	DISTANCE		FY	LD	MZ	LD	FZ	LD	MY	LD
1	0.00	MAX	-13.40	1000	0.00	2009	0.00	2009	0.00	2009
		MIN	-29.21	214	0.00	2009	0.00	2009	0.00	2009
	0.38	MAX	-13.86	1000	11.21	214	0.00	2009	0.00	2009
		MIN	-29.22	214	5.23	1000	0.00	2009	0.00	2009
	0.77	MAX	-14.30	1000	22.43	214	0.00	2009	0.00	2009
		MIN	-29.24	214	10.63	1000	0.00	2009	0.00	2009
	1.15	MAX	-14.73	1000	33.65	214	0.00	2009	0.00	2009
		MIN	-29.26	214	16.20	1000	0.00	2009	0.00	2009
	1.53	MAX	-15.14	1000	44.88	214	0.00	2009	0.00	2009
		MIN	-29.28	214	21.94	1000	0.00	2009	0.00	2009
	1.92	MAX	-15.55	1000	56.12	214	0.00	2009	0.00	2009
		MIN	-29.31	214	27.82	1000	0.00	2009	0.00	2009
	2.30	MAX	-15.94	1000	67.37	214	0.00	2009	0.00	2009
		MIN	-29.34	214	33.86	1000	0.00	2009	0.00	2009
	2.69	MAX	-16.16	2000	78.63	214	0.00	2009	0.00	2009
		MIN	-29.52	114	40.05	1000	0.00	2009	0.00	2009
	3.07	MAX	-16.20	2000	89.91	214	0.00	2009	0.00	2009
		MIN	-29.89	114	46.38	1000	0.00	2009	0.00	2009
	3.45	MAX	-16.24	2000	101.20	214	0.00	2009	0.00	2009
		MIN	-30.24	114	52.85	1000	0.00	2009	0.00	2009
	3.84	MAX	-16.29	2000	112.51	214	0.00	2009	0.00	2009
		MIN	-30.57	114	59.45	1000	0.00	2009	0.00	2009
	4.22	MAX	-16.34	2000	123.84	214	0.00	2009	0.00	2009
		MIN	-30.90	114	66.17	1000	0.00	2009	0.00	2009
	4.60	MAX	-16.39	2000	135.19	214	0.00	2009	0.00	2009
		MIN	-31.21	114	73.02	1000	0.00	2009	0.00	2009

MAX/MIN FORCE VALUES FOR MEMB 1, AMONGST ALL SECT LOCATIONS

	FY/ FZ	DIST DIST	LD LD	MZ/ MY	DIST DIST	LD LD	FX	DIST	LD
MAX.	-13.40	0.00	1000	135.19	4.60	214			
	0.00	0.00	100	0.00	0.00	100	29.70 C	0.00	210
MIN.	-31.21	4.60	114	0.00	0.00	2009			
	0.00	4.60	2009	0.00	4.60	2009	16.79 C	4.60	204

2	0.00	MAX	-13.92	100	0.00	2009	0.00	2009	0.00	2009
		MIN	-29.14	213	0.00	2009	0.00	2009	0.00	2009
	0.38	MAX	-14.38	100	11.18	213	0.00	2009	0.00	2009
		MIN	-29.15	213	5.43	100	0.00	2009	0.00	2009

0.77	MAX	-14.82	100	22.37	213	0.00	2009	0.00	2009
	MIN	-29.17	213	11.03	100	0.00	2009	0.00	2009
1.15	MAX	-15.25	100	33.57	213	0.00	2009	0.00	2009
	MIN	-29.19	213	16.80	100	0.00	2009	0.00	2009
1.53	MAX	-15.66	100	44.78	213	0.00	2009	0.00	2009
	MIN	-29.21	213	22.73	100	0.00	2009	0.00	2009
1.92	MAX	-16.06	100	55.99	213	0.00	2009	0.00	2009
	MIN	-29.24	213	28.82	100	0.00	2009	0.00	2009
2.30	MAX	-16.45	100	67.22	213	0.00	2009	0.00	2009
	MIN	-29.27	213	35.05	100	0.00	2009	0.00	2009
2.69	MAX	-16.68	200	78.45	213	0.00	2009	0.00	2009
	MIN	-29.46	113	41.44	100	0.00	2009	0.00	2009
3.07	MAX	-16.72	200	89.71	213	0.00	2009	0.00	2009
	MIN	-29.82	113	47.97	100	0.00	2009	0.00	2009
3.45	MAX	-16.76	200	100.97	213	0.00	2009	0.00	2009
	MIN	-30.17	113	54.63	100	0.00	2009	0.00	2009
3.84	MAX	-16.81	200	112.26	213	0.00	2009	0.00	2009
	MIN	-30.51	113	61.43	100	0.00	2009	0.00	2009
4.22	MAX	-16.86	200	123.56	213	0.00	2009	0.00	2009
	MIN	-30.83	113	68.36	100	0.00	2009	0.00	2009
4.60	MAX	-16.91	200	134.88	213	0.00	2009	0.00	2009
	MIN	-31.14	113	75.40	100	0.00	2009	0.00	2009

MAX/MIN FORCE VALUES FOR MEMB 2, AMONGST ALL SECT LOCATIONS

	FY/ FZ	DIST DIST	LD LD	MZ/ MY	DIST DIST	LD LD	FX	DIST	LD
MAX.	-13.92	0.00	100	134.88	4.60	213			
	0.00	0.00	100	0.00	0.00	100	27.21 C	0.00	214
MIN.	-31.14	4.60	113	0.00	0.00	2009			
	0.00	4.60	2009	0.00	4.60	2009	15.38 C	4.60	200

********** END OF FORCE ENVELOPE FROM INTERNAL STORAGE **********

478. LOAD LIST 300 TO 315 400 TO 415 3000 TO 3009 4000 TO 4009
479. PRINT FORCE ENVELOPE NSECTION 4 LIST 3 6

MEMBER FORCE ENVELOPE

ALL UNITS ARE KIP FEET

MEMB	DISTANCE		FY	LD	MZ	LD	FZ	LD	MY	LD
3	0.00	MAX	12.88	410	84.29	414	0.00	4009	0.00	4009
		MIN	7.73	304	49.53	3000	0.00	4009	0.00	4009
	0.75	MAX	12.53	410	76.63	414	0.00	4009	0.00	4009
		MIN	6.67	3000	44.37	3000	0.00	4009	0.00	4009
	1.50	MAX	12.17	410	69.28	415	0.00	4009	0.00	4009
		MIN	6.32	3000	39.03	3001	0.00	4009	0.00	4009
	2.26	MAX	11.10	411	62.57	415	0.00	4009	0.00	4009
		MIN	5.97	3000	31.71	3002	0.00	4009	0.00	4009
	3.01	MAX	10.76	411	56.12	415	0.00	4009	0.00	4009
		MIN	5.33	3001	25.75	3002	0.00	4009	0.00	4009
	3.76	MAX	10.42	411	49.93	415	0.00	4009	0.00	4009
		MIN	4.99	3001	20.04	3002	0.00	4009	0.00	4009
	4.51	MAX	10.08	411	43.99	415	0.00	4009	0.00	4009
		MIN	4.65	3001	14.59	3002	0.00	4009	0.00	4009
	5.27	MAX	9.08	412	38.38	4009	0.00	4009	0.00	4009
		MIN	4.32	3001	9.39	3002	0.00	4009	0.00	4009
	6.02	MAX	8.75	412	33.52	4009	0.00	4009	0.00	4009
		MIN	3.39	3002	4.49	3002	0.00	4009	0.00	4009
	6.77	MAX	8.42	412	28.91	4009	0.00	4009	0.00	4009
		MIN	3.07	3002	0.91	3003	0.00	4009	0.00	4009
	7.52	MAX	8.10	412	24.56	3009	0.00	4009	0.00	4009
		MIN	2.74	3002	-3.15	4003	0.00	4009	0.00	4009
	8.28	MAX	7.25	413	20.53	3009	0.00	4009	0.00	4009
		MIN	2.43	3002	-7.46	4004	0.00	4009	0.00	4009
	9.03	MAX	6.94	413	16.73	3009	0.00	4009	0.00	4009
		MIN	1.54	3003	-10.76	4004	0.00	4009	0.00	4009

MAX/MIN FORCE VALUES FOR MEMB 3, AMONGST ALL SECT LOCATIONS

	FY/ FZ	DIST DIST	LD LD	MZ/ MY	DIST DIST	LD LD	FX	DIST	LD
MAX.	12.88	0.00	410	84.29	0.00	414			
	0.00	0.00	300	0.00	0.00	300	24.56 C	0.00	313
MIN.	1.54	9.03	3003	-10.76	9.03	4004			
	0.00	9.03	4009	0.00	9.03	4009	14.54 C	9.03	400

6	0.00	MAX	10.86	414	84.15	413	0.00	4009	0.00	4009
		MIN	7.14	300	51.64	300	0.00	4009	0.00	4009
	0.75	MAX	10.50	414	76.61	412	0.00	4009	0.00	4009
		MIN	6.79	300	46.40	300	0.00	4009	0.00	4009

1.50	MAX	10.15	414	69.65	412	0.00	4009	0.00	4009
	MIN	6.43	300	41.43	300	0.00	4009	0.00	4009
2.26	MAX	9.46	415	62.96	412	0.00	4009	0.00	4009
	MIN	6.09	300	36.72	300	0.00	4009	0.00	4009
3.01	MAX	9.12	415	56.52	412	0.00	4009	0.00	4009
	MIN	5.74	300	32.27	300	0.00	4009	0.00	4009
3.76	MAX	8.78	415	50.35	412	0.00	4009	0.00	4009
	MIN	5.40	300	28.08	300	0.00	4009	0.00	4009
4.51	MAX	8.44	415	44.43	412	0.00	4009	0.00	4009
	MIN	5.06	300	24.14	300	0.00	4009	0.00	4009
5.27	MAX	8.11	415	38.86	4006	0.00	4009	0.00	4009
	MIN	4.73	300	20.45	300	0.00	4009	0.00	4009
6.02	MAX	7.78	415	34.26	4006	0.00	4009	0.00	4009
	MIN	4.40	300	17.02	300	0.00	4009	0.00	4009
6.77	MAX	7.45	415	29.92	4006	0.00	4009	0.00	4009
	MIN	4.08	300	13.83	300	0.00	4009	0.00	4009
7.52	MAX	7.13	415	25.84	3006	0.00	4009	0.00	4009
	MIN	3.76	300	10.85	400	0.00	4009	0.00	4009
8.28	MAX	6.82	415	22.17	3005	0.00	4009	0.00	4009
	MIN	3.44	300	8.05	400	0.00	4009	0.00	4009
9.03	MAX	6.50	415	18.89	3005	0.00	4009	0.00	4009
	MIN	3.13	300	5.49	400	0.00	4009	0.00	4009

MAX/MIN FORCE VALUES FOR MEMB 6, AMONGST ALL SECT LOCATIONS

	FY/ FZ	DIST DIST	LD LD	MZ/ MY	DIST DIST	LD LD	FX	DIST	LD
MAX.	10.86	0.00	414	84.15	0.00	413			
	0.00	0.00	300	0.00	0.00	300	24.60 C	0.00	314
MIN.	3.13	9.03	300	5.49	9.03	400			
	0.00	9.03	4009	0.00	9.03	4009	14.55 C	9.03	400

********** END OF FORCE ENVELOPE FROM INTERNAL STORAGE **********

480. LOAD LIST 300 TO 315 400 TO 415 3000 TO 3009 4000 TO 4009
481. PRINT FORCE ENVELOPE NSECTION 4 LIST 4 5

MEMBER FORCE ENVELOPE

ALL UNITS ARE KIP FEET

MEMB	DISTANCE		FY	LD	MZ	LD	FZ	LD	MY	LD
4	0.00	MAX	9.74	413	16.73	3009	0.00	4009	0.00	4009
		MIN	3.91	4003	-10.76	4004	0.00	4009	0.00	4009
	1.00	MAX	9.33	413	9.30	3009	0.00	4009	0.00	4009
		MIN	3.49	4003	-17.15	4004	0.00	4009	0.00	4009
	2.00	MAX	8.31	414	2.29	3009	0.00	4009	0.00	4009
		MIN	3.07	4003	-23.13	4004	0.00	4009	0.00	4009
	3.00	MAX	7.89	414	-4.30	3009	0.00	4009	0.00	4009
		MIN	2.30	4004	-26.17	4005	0.00	4009	0.00	4009
	4.00	MAX	7.47	414	-10.48	3009	0.00	4009	0.00	4009
		MIN	1.89	4004	-30.96	4005	0.00	4009	0.00	4009
	5.00	MAX	6.46	415	-14.55	300	0.00	4009	0.00	4009
		MIN	1.47	4004	-35.34	4005	0.00	4009	0.00	4009
	6.00	MAX	6.04	415	-17.24	300	0.00	4009	0.00	4009
		MIN	0.70	4005	-38.00	4006	0.00	4009	0.00	4009
	7.00	MAX	5.62	415	-19.51	300	0.00	4009	0.00	4009
		MIN	0.28	4005	-41.12	4006	0.00	4009	0.00	4009
	8.00	MAX	4.71	4008	-21.37	300	0.00	4009	0.00	4009
		MIN	-0.14	4005	-43.82	4006	0.00	4009	0.00	4009
	9.00	MAX	4.30	4008	-22.80	300	0.00	4009	0.00	4009
		MIN	-0.97	4006	-45.09	4007	0.00	4009	0.00	4009
	10.00	MAX	3.88	4008	-23.83	300	0.00	4009	0.00	4009
		MIN	-1.39	4006	-46.55	4007	0.00	4009	0.00	4009
	11.00	MAX	3.05	4009	-24.43	300	0.00	4009	0.00	4009
		MIN	-1.80	4006	-47.58	4007	0.00	4009	0.00	4009
	12.00	MAX	2.63	4009	-24.60	3000	0.00	4009	0.00	4009
		MIN	-2.64	4007	-47.46	4008	0.00	4009	0.00	4009

MAX/MIN FORCE VALUES FOR MEMB 4, AMONGST ALL SECT LOCATIONS

	FY/ FZ	DIST DIST	LD LD	MZ/ MY	DIST DIST	LD LD	FX	DIST	LD
MAX.	9.74	0.00	313	16.73	0.00	3009			
	0.00	0.00	300	0.00	0.00	300	23.08 C	0.00	314
MIN.	-2.64	12.00	4007	-47.58	11.00	4007			
	0.00	12.00	4009	0.00	12.00	4009	14.03 C	12.00	400

5	0.00	MAX	9.27	415	18.89	3005	0.00	4009	0.00	4009
		MIN	5.03	400	5.49	400	0.00	4009	0.00	4009
	1.00	MAX	8.85	415	12.28	3005	0.00	4009	0.00	4009
		MIN	4.61	400	-2.72	415	0.00	4009	0.00	4009

2.00	MAX	8.44	415	6.09	3005	0.00	4009	0.00	4009
	MIN	4.20	400	-11.36	415	0.00	4009	0.00	4009
3.00	MAX	7.42	414	0.62	3004	0.00	4009	0.00	4009
	MIN	3.78	400	-19.44	415	0.00	4009	0.00	4009
4.00	MAX	7.00	414	-4.38	3004	0.00	4009	0.00	4009
	MIN	3.36	400	-23.35	415	0.00	4009	0.00	4009
5.00	MAX	6.59	414	-8.96	3004	0.00	4009	0.00	4009
	MIN	2.94	400	-29.08	4009	0.00	4009	0.00	4009
6.00	MAX	5.98	4009	-13.05	3003	0.00	4009	0.00	4009
	MIN	2.27	414	-35.27	4009	0.00	4009	0.00	4009
7.00	MAX	5.15	413	-16.45	3003	0.00	4009	0.00	4009
	MIN	1.85	414	-40.91	4009	0.00	4009	0.00	4009
8.00	MAX	4.74	413	-19.43	3003	0.00	4009	0.00	4009
	MIN	1.43	414	-43.22	4009	0.00	4009	0.00	4009
9.00	MAX	4.31	4008	-21.60	3002	0.00	4009	0.00	4009
	MIN	0.42	413	-45.10	4009	0.00	4009	0.00	4009
10.00	MAX	3.47	4007	-23.33	3002	0.00	4009	0.00	4009
	MIN	0.00	413	-46.61	4008	0.00	4009	0.00	4009
11.00	MAX	3.06	4007	-24.32	3000	0.00	4009	0.00	4009
	MIN	-2.21	4009	-47.49	4009	0.00	4009	0.00	4009
12.00	MAX	2.64	4007	-24.60	3000	0.00	4009	0.00	4009
	MIN	-2.63	4009	-47.46	4008	0.00	4009	0.00	4009

MAX/MIN FORCE VALUES FOR MEMB 5, AMONGST ALL SECT LOCATIONS

	FY/ FZ	DIST DIST	LD LD	MZ/ MY	DIST DIST	LD LD	FX	DIST	LD
MAX.	9.27	0.00	315	18.89	0.00	3005			
	0.00	0.00	300	0.00	0.00	300	23.08 C	0.00	314
MIN.	-2.63	12.00	4009	-47.49	11.00	4009			
	0.00	12.00	4009	0.00	12.00	4009	14.03 C	12.00	400

********** END OF FORCE ENVELOPE FROM INTERNAL STORAGE **********

482. LOAD LIST 300 TO 315 400 TO 415 3000 TO 3009 4000 TO 4009
483. PRINT FORCE ENVELOPE NSECTION 4 LIST 1 2

MEMBER FORCE ENVELOPE

ALL UNITS ARE KIP FEET

MEMB	DISTANCE		FY	LD	MZ	LD	FZ	LD	MY	LD
1	0.00	MAX	-10.04	3000	0.00	4009	0.00	4009	0.00	4009
		MIN	-19.29	414	0.00	4009	0.00	4009	0.00	4009
	0.38	MAX	-10.35	3000	7.40	414	0.00	4009	0.00	4009
		MIN	-19.29	414	3.91	3000	0.00	4009	0.00	4009
	0.77	MAX	-10.64	3000	14.81	414	0.00	4009	0.00	4009
		MIN	-19.30	414	7.94	3000	0.00	4009	0.00	4009
	1.15	MAX	-10.93	3000	22.22	414	0.00	4009	0.00	4009
		MIN	-19.32	414	12.08	3000	0.00	4009	0.00	4009
	1.53	MAX	-11.21	3000	29.63	414	0.00	4009	0.00	4009
		MIN	-19.33	414	16.33	3000	0.00	4009	0.00	4009
	1.92	MAX	-11.48	3000	37.05	414	0.00	4009	0.00	4009
		MIN	-19.36	414	20.68	3000	0.00	4009	0.00	4009
	2.30	MAX	-11.73	3000	44.49	414	0.00	4009	0.00	4009
		MIN	-19.38	414	25.13	3000	0.00	4009	0.00	4009
	2.69	MAX	-11.86	4000	51.93	414	0.00	4009	0.00	4009
		MIN	-19.53	314	29.68	3000	0.00	4009	0.00	4009
	3.07	MAX	-11.90	4000	59.38	414	0.00	4009	0.00	4009
		MIN	-19.77	314	34.33	3000	0.00	4009	0.00	4009
	3.45	MAX	-11.94	4000	66.85	414	0.00	4009	0.00	4009
		MIN	-20.00	314	39.06	3000	0.00	4009	0.00	4009
	3.84	MAX	-11.98	4000	74.34	414	0.00	4009	0.00	4009
		MIN	-20.22	314	43.88	3000	0.00	4009	0.00	4009
	4.22	MAX	-12.02	4000	81.84	414	0.00	4009	0.00	4009
		MIN	-20.43	314	48.78	3000	0.00	4009	0.00	4009
	4.60	MAX	-12.07	4000	89.36	414	0.00	4009	0.00	4009
		MIN	-20.63	314	53.76	3000	0.00	4009	0.00	4009

MAX/MIN FORCE VALUES FOR MEMB 1, AMONGST ALL SECT LOCATIONS

	FY/ FZ	DIST	LD	MZ/ MY	DIST	LD	FX	DIST	LD
MAX.	-10.04	0.00	3000	89.36	4.60	414			
	0.00	0.00	300	0.00	0.00	300	19.73 C	0.00	410
MIN.	-20.63	4.60	314	0.00	0.00	4009			
	0.00	4.60	4009	0.00	4.60	4009	12.05 C	4.60	404

2	0.00	MAX	-10.34	300	0.00	4009	0.00	4009	0.00	4009
		MIN	-19.25	413	0.00	4009	0.00	4009	0.00	4009
	0.38	MAX	-10.64	300	7.39	413	0.00	4009	0.00	4009
		MIN	-19.26	413	4.03	300	0.00	4009	0.00	4009

0.77	MAX	-10.94	300	14.78	413	0.00	4009	0.00	4009
	MIN	-19.27	413	8.17	300	0.00	4009	0.00	4009
1.15	MAX	-11.23	300	22.17	413	0.00	4009	0.00	4009
	MIN	-19.28	413	12.42	300	0.00	4009	0.00	4009
1.53	MAX	-11.50	300	29.57	413	0.00	4009	0.00	4009
	MIN	-19.30	413	16.78	300	0.00	4009	0.00	4009
1.92	MAX	-11.77	300	36.98	413	0.00	4009	0.00	4009
	MIN	-19.32	413	21.25	300	0.00	4009	0.00	4009
2.30	MAX	-12.03	300	44.40	413	0.00	4009	0.00	4009
	MIN	-19.34	413	25.81	300	0.00	4009	0.00	4009
2.69	MAX	-12.16	400	51.83	413	0.00	4009	0.00	4009
	MIN	-19.49	313	30.48	300	0.00	4009	0.00	4009
3.07	MAX	-12.19	400	59.27	413	0.00	4009	0.00	4009
	MIN	-19.73	313	35.23	300	0.00	4009	0.00	4009
3.45	MAX	-12.23	400	66.72	413	0.00	4009	0.00	4009
	MIN	-19.96	313	40.08	300	0.00	4009	0.00	4009
3.84	MAX	-12.27	400	74.19	413	0.00	4009	0.00	4009
	MIN	-20.18	313	45.01	300	0.00	4009	0.00	4009
4.22	MAX	-12.32	400	81.68	413	0.00	4009	0.00	4009
	MIN	-20.39	313	50.03	300	0.00	4009	0.00	4009
4.60	MAX	-12.37	400	89.18	413	0.00	4009	0.00	4009
	MIN	-20.59	313	55.12	300	0.00	4009	0.00	4009

MAX/MIN FORCE VALUES FOR MEMB 2, AMONGST ALL SECT LOCATIONS

	FY/ FZ	DIST DIST	LD LD	MZ/ MY	DIST DIST	LD LD	FX	DIST	LD
MAX.	-10.34	0.00	300	89.18	4.60	413			
	0.00	0.00	300	0.00	0.00	300	18.31 C	0.00	414
MIN.	-20.59	4.60	313	0.00	0.00	4009			
	0.00	4.60	4009	0.00	4.60	4009	11.25 C	4.60	400

********** END OF FORCE ENVELOPE FROM INTERNAL STORAGE **********

484. ***
485. FINISH

```
*********** END OF THE STAAD.Pro RUN ***********

  **** DATE= MAR  1,2016   TIME= 10:40:17 ****

************************************************************
*   For technical assistance on STAAD.Pro, please visit    *
*   http://selectservices.bentley.com/en-US/               *
*                                                          *
*   Details about additional assistance from               *
*   Bentley and Partners can be found at program menu      *
*   Help->Technical Support                                *
*                                                          *
*      Copyright (c) 1997-2014 Bentley Systems, Inc.
*                http://www.bentley.com                    *
************************************************************
```

Software licensed to	Job No	Sheet No 1	Rev
	Part		
Job Title	Ref		
	By BK	Date 12/22/15	Chd
Client	File 42.42ft x 5ft-HL93-Fixed.s	Date/Time 01-Mar-2016 10:39	

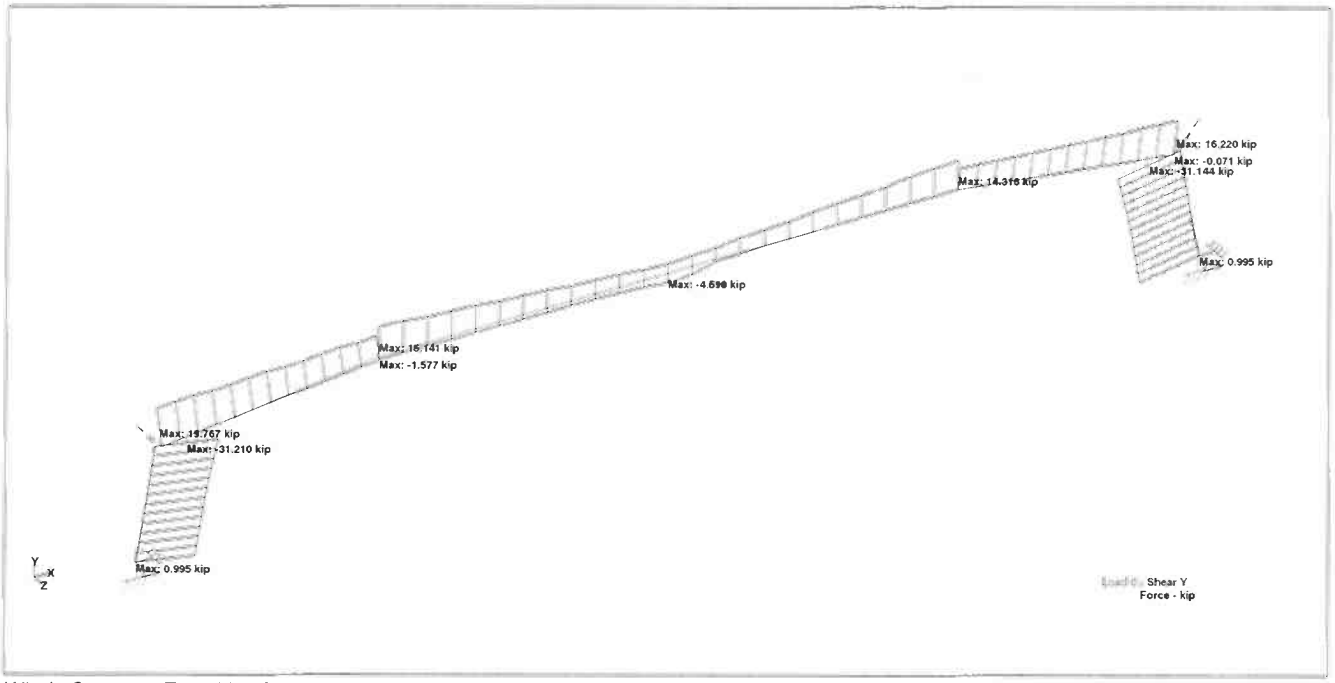

Whole Structure Fy 12kip:1ft 0 Envelope

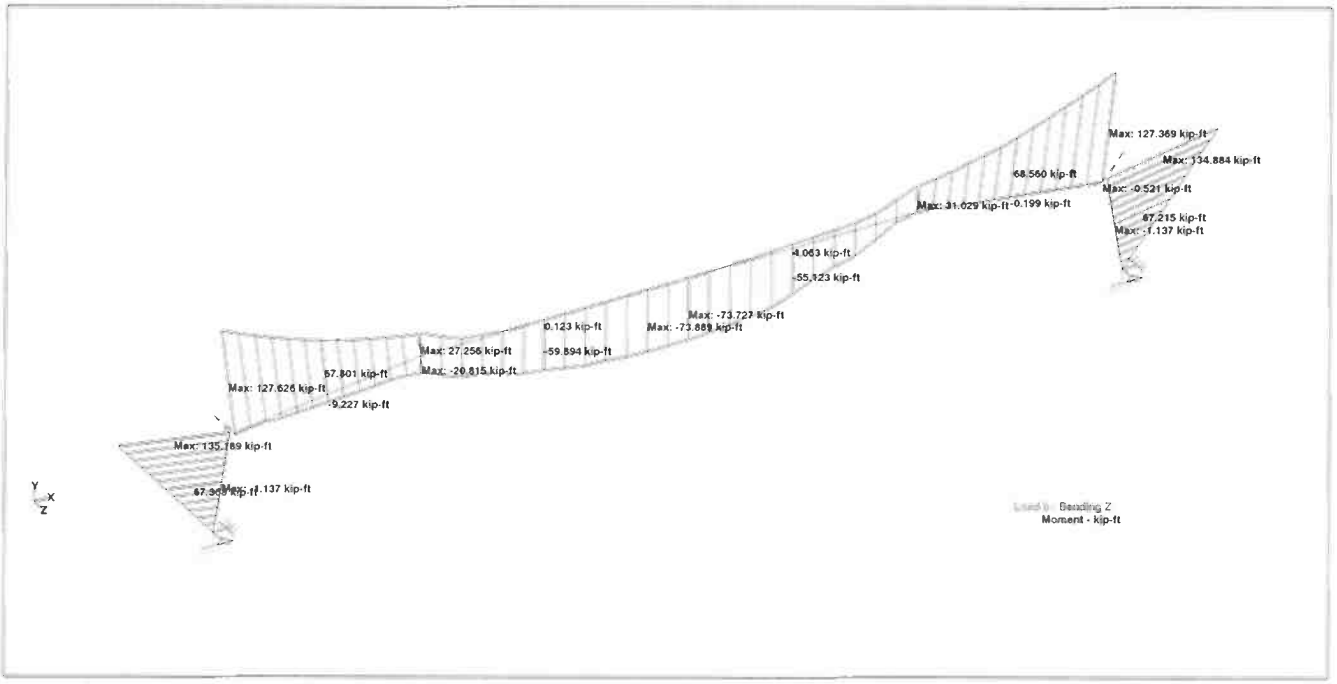

Whole Structure Mz 25kip-ft:1ft 0 Envelope

Section 4
STAAD PRO Output: 42.42’ x 4.583’ Rigid Bridge, 0’-2’ Earth Cover, Spring HL93 incl. SF & BM Diagrams

```
****************************************************
*                                                  *
*           STAAD.Pro V8i SELECTseries5            *
*           Version  20.07.10.65                   *
*           Proprietary Program of                 *
*           Bentley Systems, Inc.                  *
*           Date=    MAR  1, 2016                  *
*           Time=    10:41:23                      *
*                                                  *
*      USER ID:                                    *
****************************************************
```

B

```
     1. STAAD SPACE
INPUT FILE: 42.42ft x 5ft-HL93-Spring.STD
     2. START JOB INFORMATION
     3. ENGINEER DATE 12/22/15
     4. ENGINEER NAME BK
     5. END JOB INFORMATION
     6. INPUT WIDTH 79
     7. UNIT FEET KIP
     8. JOINT COORDINATES
     9. 1 -21.96 0 0; 2 21.96 0 0; 3 -21.96 5.583 0; 4 -12 5.583 0; 5 0 5.583 0
    10. 6 12 5.583 0; 7 21.96 5.583 0
    11. MEMBER INCIDENCES
    12. 1 1 3; 2 2 7; 3 3 4; 4 4 5; 5 6 5; 6 7 6
    13. DEFINE MATERIAL START
    14. ISOTROPIC CONCRETE5000
    15. E 580390
    16. POISSON 0.17
    17. DENSITY 0.15
    18. ALPHA 5.5E-006
    19. DAMP 0.05
    20. ISOTROPIC STEEL
    21. E 4.176E+006
    22. POISSON 0.3
    23. DENSITY 0.489024
    24. ALPHA 6.5E-006
    25. DAMP 0.03
    26. END DEFINE MATERIAL
    27. MEMBER PROPERTY AMERICAN
    28. 4 5 PRIS YD 1.416 ZD 1
    29. MEMBER PROPERTY AMERICAN
    30. 1 2 TAPERED 2.083 1 1.5 1 0.2 1 0.2
    31. 3 6 TAPERED 1.83 1 1.416 1 0.2 1 0.2
    32. CONSTANTS
    33. MATERIAL CONCRETE5000 ALL
    34. SUPPORTS
    35. 1 FIXED BUT MZ
    36. 2 FIXED BUT MZ KFX 200
    37. MEMBER OFFSET
    38. 3 START 1 -1.12 0
```

```
 39. 6 START -1 -1.12 0
 40. 1 END 0.75 -1.04 0
 41. 2 END -0.75 -1.04 0
 42. DEFINE MOVING LOAD
 43. ***TRUCK
 44. TYPE 1 LOAD 3.9 3.9 0.975
 45. DIST 14 14
 46. ***TANDEM
 47. TYPE 2 LOAD 3.05 3.05
 48. DIST 4
 49. ***
 50. LOAD 1 LOADTYPE NONE  TITLE LOAD CASE 1- UNIFORM LOAD -COVER 1.0FT
 51. MEMBER LOAD
 52. 3 TO 6 UNI GY -0.141
 53. SELFWEIGHT Y -1
 54. LOAD 2 LOADTYPE NONE  TITLE -EMAX
 55. MEMBER LOAD
 56. 2 TRAP GX -0.49 -0.198
 57. 1 TRAP GX 0.49 0.198
 58. LOAD 4 LOADTYPE NONE  TITLE -AWL
 59. MEMBER LOAD
 60. 2 UNI GX -0.28
 61. 1 UNI GX 0.28
 62. LOAD 5 LOADTYPE NONE  TITLE -IPF-WATER INSIDE
 63. MEMBER LOAD
 64. 2 TRAP GX 0.286 0 0
 65. 1 TRAP GX -0.286 0 0
 66. LOAD 3 LOADTYPE NONE  TITLE LOAD CASE LL - LANE LOAD
 67. MEMBER LOAD
 68. 3 TO 6 UNI GY -0.064
 69. LOAD 6 LOADTYPE LIVE  TITLE LOAD CASE LL - TRUCK
 70. LOAD GENERATION 16
 71. TYPE 1 -49.96 5.583 0 XINC 3
 72. LOAD 26 LOADTYPE LIVE  TITLE LOAD CASE LL - TANDEM
**WARNING-A MOVING LOAD THAT WOULD HAVE BEEN APPLIED BEYOND THE X AND Z RANGES
          OF THE STRUCTURE HAS BEEN IGNORED. CASE=    7 WHEEL   1 OF   3
**WARNING-A MOVING LOAD THAT WOULD HAVE BEEN APPLIED BEYOND THE X AND Z RANGES
          OF THE STRUCTURE HAS BEEN IGNORED. CASE=    7 WHEEL   2 OF   3
**WARNING-A MOVING LOAD THAT WOULD HAVE BEEN APPLIED BEYOND THE X AND Z RANGES
          OF THE STRUCTURE HAS BEEN IGNORED. CASE=    8 WHEEL   1 OF   3
**WARNING-A MOVING LOAD THAT WOULD HAVE BEEN APPLIED BEYOND THE X AND Z RANGES
          OF THE STRUCTURE HAS BEEN IGNORED. CASE=    8 WHEEL   2 OF   3
**WARNING-A MOVING LOAD THAT WOULD HAVE BEEN APPLIED BEYOND THE X AND Z RANGES
          OF THE STRUCTURE HAS BEEN IGNORED. CASE=    9 WHEEL   1 OF   3
**WARNING-A MOVING LOAD THAT WOULD HAVE BEEN APPLIED BEYOND THE X AND Z RANGES
          OF THE STRUCTURE HAS BEEN IGNORED. CASE=    9 WHEEL   2 OF   3
**WARNING-A MOVING LOAD THAT WOULD HAVE BEEN APPLIED BEYOND THE X AND Z RANGES
          OF THE STRUCTURE HAS BEEN IGNORED. CASE=   10 WHEEL   1 OF   3
**WARNING-A MOVING LOAD THAT WOULD HAVE BEEN APPLIED BEYOND THE X AND Z RANGES
          OF THE STRUCTURE HAS BEEN IGNORED. CASE=   10 WHEEL   2 OF   3
**WARNING-A MOVING LOAD THAT WOULD HAVE BEEN APPLIED BEYOND THE X AND Z RANGES
          OF THE STRUCTURE HAS BEEN IGNORED. CASE=   11 WHEEL   1 OF   3
**WARNING-A MOVING LOAD THAT WOULD HAVE BEEN APPLIED BEYOND THE X AND Z RANGES
          OF THE STRUCTURE HAS BEEN IGNORED. CASE=   11 WHEEL   2 OF   3
*ADDITIONAL MOVING LOAD MESSAGES SUPPRESSED
*ADDITIONAL MOVING LOAD MESSAGES SUPPRESSED
```

```
 73. LOAD GENERATION 10
 74. TYPE 2 -25.96 5.583 0 XINC 3
 75. ***TRUCK
 76. LOAD COMB 100 COMBINATION LOAD CASE -MAX MOMENT OUTSIDE
 77. 7 1.75 3 1.75 1 1.3 2 1.35 4 1.75
 78. LOAD COMB 101 COMBINATION LOAD CASE
 79. 8 1.75 3 1.75 1 1.3 2 1.35 4 1.75
 80. LOAD COMB 102 COMBINATION LOAD CASE
 81. 9 1.75 3 1.75 1 1.3 2 1.35 4 1.75
 82. LOAD COMB 103 COMBINATION LOAD CASE
 83. 10 1.75 3 1.75 1 1.3 2 1.35 4 1.75
 84. LOAD COMB 104 COMBINATION LOAD CASE
 85. 11 1.75 3 1.75 1 1.3 2 1.35 4 1.75
 86. LOAD COMB 105 COMBINATION LOAD CASE
 87. 12 1.75 3 1.75 1 1.3 2 1.35 4 1.75
 88. LOAD COMB 106 COMBINATION LOAD CASE
 89. 13 1.75 3 1.75 1 1.25 2 1.35 4 1.75
 90. LOAD COMB 107 COMBINATION LOAD CASE
 91. 14 1.75 3 1.75 1 1.3 2 1.35 4 1.75
 92. LOAD COMB 108 COMBINATION LOAD CASE
 93. 15 1.75 3 1.75 1 1.3 2 1.35 4 1.75
 94. LOAD COMB 109 COMBINATION LOAD CASE
 95. 16 1.75 3 1.75 1 1.3 2 1.35 4 1.75
 96. LOAD COMB 110 COMBINATION LOAD CASE
 97. 17 1.75 3 1.75 1 1.3 2 1.35 4 1.75
 98. LOAD COMB 111 COMBINATION LOAD CASE
 99. 18 1.75 3 1.75 1 1.3 2 1.35 4 1.75
100. LOAD COMB 112 COMBINATION LOAD CASE
101. 19 1.75 3 1.75 1 1.3 2 1.35 4 1.75
102. LOAD COMB 113 COMBINATION LOAD CASE
103. 20 1.75 3 1.75 1 1.3 2 1.35 4 1.75
104. LOAD COMB 114 COMBINATION LOAD CASE
105. 21 1.75 3 1.75 1 1.3 2 1.35 4 1.75
106. LOAD COMB 115 COMBINATION LOAD CASE
107. 22 1.75 3 1.75 1 1.3 2 1.35 4 1.75
108. LOAD COMB 200 COMBINATION LOAD CASE -MAX MOMENT INSIDE
109. 7 1.75 3 1.75 1 1.3 2 0.5 5 1.0
110. LOAD COMB 201 COMBINATION LOAD CASE
111. 8 1.75 3 1.75 1 1.3 2 0.5 5 1.0
112. LOAD COMB 202 COMBINATION LOAD CASE
113. 9 1.75 3 1.75 1 1.3 2 0.5 5 1.0
114. LOAD COMB 203 COMBINATION LOAD CASE
115. 10 1.75 3 1.75 1 1.3 2 0.5 5 1.0
116. LOAD COMB 204 COMBINATION LOAD CASE
117. 11 1.75 3 1.75 1 1.3 2 0.5 5 1.0
118. LOAD COMB 205 COMBINATION LOAD CASE
119. 12 1.75 3 1.75 1 1.3 2 0.5 5 1.0
120. LOAD COMB 206 COMBINATION LOAD CASE
121. 13 1.75 3 1.75 1 1.3 2 0.5 5 1.0
122. LOAD COMB 207 COMBINATION LOAD CASE
123. 14 1.75 3 1.75 1 1.3 2 0.5 5 1.0
124. LOAD COMB 208 COMBINATION LOAD CASE
125. 15 1.75 3 1.75 1 1.3 2 0.5 5 1.0
126. LOAD COMB 209 COMBINATION LOAD CASE
127. 16 1.75 3 1.75 1 1.3 2 0.5 5 1.0
128. LOAD COMB 210 COMBINATION LOAD CASE
```

```
129. 17 1.75 3 1.75 1 1.3 2 0.5 5 1.0
130. LOAD COMB 211 COMBINATION LOAD CASE
131. 18 1.75 3 1.75 1 1.3 2 0.5 5 1.0
132. LOAD COMB 212 COMBINATION LOAD CASE
133. 19 1.75 3 1.75 1 1.3 2 0.5 5 1.0
134. LOAD COMB 213 COMBINATION LOAD CASE
135. 20 1.75 3 1.75 1 1.3 2 0.5 5 1.0
136. LOAD COMB 214 COMBINATION LOAD CASE
137. 21 1.75 3 1.75 1 1.3 2 0.5 5 1.0
138. LOAD COMB 215 COMBINATION LOAD CASE
139. 22 1.75 3 1.75 1 1.3 2 0.5 5 1.0
140. LOAD COMB 300 COMBINATION LOAD CASE -CRACK CONTROL-MAX OUTSIDE
141. 7 1.0 3 1.0 1 1.0 2 1.0 4 1.0
142. LOAD COMB 301 COMBINATION LOAD CASE
143. 8 1.0 3 1.0 1 1.0 2 1.0 4 1.0
144. LOAD COMB 302 COMBINATION LOAD CASE
145. 9 1.0 3 1.0 1 1.0 2 1.0 4 1.0
146. LOAD COMB 303 COMBINATION LOAD CASE
147. 10 1.0 3 1.0 1 1.0 2 1.0 4 1.0
148. LOAD COMB 304 COMBINATION LOAD CASE
149. 11 1.0 3 1.0 1 1.0 2 1.0 4 1.0
150. LOAD COMB 305 COMBINATION LOAD CASE
151. 12 1.0 3 1.0 1 1.0 2 1.0 4 1.0
152. LOAD COMB 306 COMBINATION LOAD CASE
153. 13 1.0 3 1.0 1 1.0 2 1.0 4 1.0
154. LOAD COMB 307 COMBINATION LOAD CASE
155. 14 1.0 3 1.0 1 1.0 2 1.0 4 1.0
156. LOAD COMB 308 COMBINATION LOAD CASE
157. 15 1.0 3 1.0 1 1.0 2 1.0 4 1.0
158. LOAD COMB 309 COMBINATION LOAD CASE
159. 16 1.0 3 1.0 1 1.0 2 1.0 4 1.0
160. LOAD COMB 310 COMBINATION LOAD CASE
161. 17 1.0 3 1.0 1 1.0 2 1.0 4 1.0
162. LOAD COMB 311 COMBINATION LOAD CASE
163. 18 1.0 3 1.0 1 1.0 2 1.0 4 1.0
164. LOAD COMB 312 COMBINATION LOAD CASE
165. 19 1.0 3 1.0 1 1.0 2 1.0 4 1.0
166. LOAD COMB 313 COMBINATION LOAD CASE
167. 20 1.0 3 1.0 1 1.0 2 1.0 4 1.0
168. LOAD COMB 314 COMBINATION LOAD CASE
169. 21 1.0 3 1.0 1 1.0 2 1.0 4 1.0
170. LOAD COMB 315 COMBINATION LOAD CASE
171. 22 1.0 3 1.0 1 1.0 2 1.0 4 1.0
172. LOAD COMB 400 COMBINATION LOAD CASE -CRACK CONTROL-MAX INSIDE
173. 7 1.0 3 1.0 1 1.0 2 0.5 5 1.0
174. LOAD COMB 401 COMBINATION LOAD CASE
175. 8 1.0 3 1.0 1 1.0 2 0.5 5 1.0
176. LOAD COMB 402 COMBINATION LOAD CASE
177. 9 1.0 3 1.0 1 1.0 2 0.5 5 1.0
178. LOAD COMB 403 COMBINATION LOAD CASE
179. 10 1.0 3 1.0 1 1.0 2 0.5 5 1.0
180. LOAD COMB 404 COMBINATION LOAD CASE
181. 11 1.0 3 1.0 1 1.0 2 0.5 5 1.0
182. LOAD COMB 405 COMBINATION LOAD CASE
183. 12 1.0 3 1.0 1 1.0 2 0.5 5 1.0
184. LOAD COMB 406 COMBINATION LOAD CASE
```

```
185. 13 1.0 3 1.0 1 1.0 2 0.5 5 1.0
186. LOAD COMB 407 COMBINATION LOAD CASE
187. 14 1.0 3 1.0 1 1.0 2 0.5 5 1.0
188. LOAD COMB 408 COMBINATION LOAD CASE
189. 15 1.0 3 1.0 1 1.0 2 0.5 5 1.0
190. LOAD COMB 409 COMBINATION LOAD CASE
191. 16 1.0 3 1.0 1 1.0 2 0.5 5 1.0
192. LOAD COMB 410 COMBINATION LOAD CASE
193. 17 1.0 3 1.0 1 1.0 2 0.5 5 1.0
194. LOAD COMB 411 COMBINATION LOAD CASE
195. 18 1.0 3 1.0 1 1.0 2 0.5 5 1.0
196. LOAD COMB 412 COMBINATION LOAD CASE
197. 19 1.0 3 1.0 1 1.0 2 0.5 5 1.0
198. LOAD COMB 413 COMBINATION LOAD CASE
199. 20 1.0 3 1.0 1 1.0 2 0.5 5 1.0
200. LOAD COMB 414 COMBINATION LOAD CASE
201. 21 1.0 3 1.0 1 1.0 2 0.5 5 1.0
202. LOAD COMB 415 COMBINATION LOAD CASE
203. 22 1.0 3 1.0 1 1.0 2 0.5 5 1.0
204. LOAD COMB 500 COMBINATION LOAD CASE -CHECK SUPPORT DISPL.
205. 7 1.0 3 1.0 1 1.0
206. LOAD COMB 501 COMBINATION LOAD CASE
207. 8 1.0 3 1.0 1 1.0
208. LOAD COMB 502 COMBINATION LOAD CASE
209. 9 1.0 3 1.0 1 1.0
210. LOAD COMB 503 COMBINATION LOAD CASE
211. 10 1.0 3 1.0 1 1.0
212. LOAD COMB 504 COMBINATION LOAD CASE
213. 11 1.0 3 1.0 1 1.0
214. LOAD COMB 505 COMBINATION LOAD CASE
215. 12 1.0 3 1.0 1 1.0
216. LOAD COMB 506 COMBINATION LOAD CASE
217. 13 1.0 3 1.0 1 1.0
218. LOAD COMB 507 COMBINATION LOAD CASE
219. 14 1.0 3 1.0 1 1.0
220. LOAD COMB 508 COMBINATION LOAD CASE
221. 15 1.0 3 1.0 1 1.0
222. LOAD COMB 509 COMBINATION LOAD CASE
223. 16 1.0 3 1.0 1 1.0
224. LOAD COMB 510 COMBINATION LOAD CASE
225. 17 1.0 3 1.0 1 1.0
226. LOAD COMB 511 COMBINATION LOAD CASE
227. 18 1.0 3 1.0 1 1.0
228. LOAD COMB 512 COMBINATION LOAD CASE
229. 19 1.0 3 1.0 1 1.0
230. LOAD COMB 513 COMBINATION LOAD CASE
231. 20 1.0 3 1.0 1 1.0
232. LOAD COMB 514 COMBINATION LOAD CASE
233. 21 1.0 3 1.0 1 1.0
234. LOAD COMB 515 COMBINATION LOAD CASE
235. 22 1.0 3 1.0 1 1.0
236. LOAD COMB 600 COMBINATION LOAD CASE -CHECK DEFLEC.
237. 7 1.0 3 1.0
238. LOAD COMB 601 COMBINATION LOAD CASE
239. 8 1.0 3 1.0
240. LOAD COMB 602 COMBINATION LOAD CASE
```

```
241. 9 1.0 3 1.0
242. LOAD COMB 603 COMBINATION LOAD CASE
243. 10 1.0 3 1.0
244. LOAD COMB 604 COMBINATION LOAD CASE
245. 11 1.0 3 1.0
246. LOAD COMB 605 COMBINATION LOAD CASE
247. 12 1.0 3 1.0
248. LOAD COMB 606 COMBINATION LOAD CASE
249. 13 1.0 3 1.0
250. LOAD COMB 607 COMBINATION LOAD CASE
251. 14 1.0 3 1.0
252. LOAD COMB 608 COMBINATION LOAD CASE
253. 15 1.0 3 1.0
254. LOAD COMB 609 COMBINATION LOAD CASE
255. 16 1.0 3 1.0
256. LOAD COMB 610 COMBINATION LOAD CASE
257. 17 1.0 3 1.0
258. LOAD COMB 611 COMBINATION LOAD CASE
259. 18 1.0 3 1.0
260. LOAD COMB 612 COMBINATION LOAD CASE
261. 19 1.0 3 1.0
262. LOAD COMB 613 COMBINATION LOAD CASE
263. 20 1.0 3 1.0
264. LOAD COMB 614 COMBINATION LOAD CASE
265. 21 1.0 3 1.0
266. LOAD COMB 615 COMBINATION LOAD CASE
267. 22 1.0 3 1.0
268. ***
269. LOAD COMB 700 COMBINATION LOAD CASE -DL
270. 1 1.0 2 1.0 4 1.0
271. LOAD COMB 701 COMBINATION LOAD CASE -DL
272. 1 1.0 2 0.5 5 1.0
273. ***
274. LOAD COMB 800 COMBINATION LOAD CASE -LL
275. 7 1.0 3 1.0
276. LOAD COMB 801 COMBINATION LOAD CASE
277. 8 1.0 3 1.0
278. LOAD COMB 802 COMBINATION LOAD CASE
279. 9 1.0 3 1.0
280. LOAD COMB 803 COMBINATION LOAD CASE
281. 10 1.0 3 1.0
282. LOAD COMB 804 COMBINATION LOAD CASE
283. 11 1.0 3 1.0
284. LOAD COMB 805 COMBINATION LOAD CASE
285. 12 1.0 3 1.0
286. LOAD COMB 806 COMBINATION LOAD CASE
287. 13 1.0 3 1.0
288. LOAD COMB 807 COMBINATION LOAD CASE
289. 14 1.0 3 1.0
290. LOAD COMB 808 COMBINATION LOAD CASE
291. 15 1.0 3 1.0
292. LOAD COMB 809 COMBINATION LOAD CASE
293. 16 1.0 3 1.0
294. LOAD COMB 810 COMBINATION LOAD CASE
295. 17 1.0 3 1.0
296. LOAD COMB 811 COMBINATION LOAD CASE
```

```
297. 18 1.0 3 1.0
298. LOAD COMB 812 COMBINATION LOAD CASE
299. 19 1.0 3 1.0
300. LOAD COMB 813 COMBINATION LOAD CASE
301. 20 1.0 3 1.0
302. LOAD COMB 814 COMBINATION LOAD CASE
303. 21 1.0 3 1.0
304. LOAD COMB 815 COMBINATION LOAD CASE
305. 22 1.0 3 1.0
306. LOAD COMB 1000 COMBINATION LOAD CASE -MAX MOMENT OUTSIDE
307. 27 1.75 3 1.75 1 1.3 2 1.35 4 1.75
308. LOAD COMB 1001 COMBINATION LOAD CASE
309. 28 1.75 3 1.75 1 1.3 2 1.35 4 1.75
310. LOAD COMB 1002 COMBINATION LOAD CASE
311. 29 1.75 3 1.75 1 1.3 2 1.35 4 1.75
312. LOAD COMB 1003 COMBINATION LOAD CASE
313. 30 1.75 3 1.75 1 1.3 2 1.35 4 1.75
314. LOAD COMB 1004 COMBINATION LOAD CASE
315. 31 1.75 3 1.75 1 1.3 2 1.35 4 1.75
316. LOAD COMB 1005 COMBINATION LOAD CASE
317. 32 1.75 3 1.75 1 1.3 2 1.35 4 1.75
318. LOAD COMB 1006 COMBINATION LOAD CASE
319. 33 1.75 3 1.75 1 1.3 2 1.35 4 1.75
320. LOAD COMB 1007 COMBINATION LOAD CASE
321. 34 1.75 3 1.75 1 1.3 2 1.35 4 1.75
322. LOAD COMB 1008 COMBINATION LOAD CASE
323. 35 1.75 3 1.75 1 1.3 2 1.35 4 1.75
324. LOAD COMB 1009 COMBINATION LOAD CASE
325. 36 1.75 3 1.75 1 1.3 2 1.35 4 1.75
326. LOAD COMB 2000 COMBINATION LOAD CASE -MAX MOMENT INSIDE
327. 27 1.75 3 1.75 1 1.3 2 0.5 5 1.0
328. LOAD COMB 2001 COMBINATION LOAD CASE
329. 28 1.75 3 1.75 1 1.3 2 0.5 5 1.0
330. LOAD COMB 2002 COMBINATION LOAD CASE
331. 29 1.75 3 1.75 1 1.3 2 0.5 5 1.0
332. LOAD COMB 2003 COMBINATION LOAD CASE
333. 30 1.75 3 1.75 1 1.3 2 0.5 5 1.0
334. LOAD COMB 2004 COMBINATION LOAD CASE
335. 31 1.75 3 1.75 1 1.3 2 0.5 5 1.0
336. LOAD COMB 2005 COMBINATION LOAD CASE
337. 32 1.75 3 1.75 1 1.3 2 0.5 5 1.0
338. LOAD COMB 2006 COMBINATION LOAD CASE
339. 33 1.75 3 1.75 1 1.3 2 0.5 5 1.0
340. LOAD COMB 2007 COMBINATION LOAD CASE
341. 34 1.75 3 1.75 1 1.3 2 0.5 5 1.0
342. LOAD COMB 2008 COMBINATION LOAD CASE
343. 35 1.75 3 1.75 1 1.3 2 0.5 5 1.0
344. LOAD COMB 2009 COMBINATION LOAD CASE
345. 36 1.75 3 1.75 1 1.3 2 0.5 5 1.0
346. LOAD COMB 3000 COMBINATION LOAD CASE -CRACK CONTROL-MAX OUTSIDE
347. 27 1.0 3 1.0 1 1.0 2 1.0 4 1.0
348. LOAD COMB 3001 COMBINATION LOAD CASE
349. 28 1.0 3 1.0 1 1.0 2 1.0 4 1.0
350. LOAD COMB 3002 COMBINATION LOAD CASE
351. 29 1.0 3 1.0 1 1.0 2 1.0 4 1.0
352. LOAD COMB 3003 COMBINATION LOAD CASE
```

```
353. 30 1.0 3 1.0 1 1.0 2 1.0 4 1.0
354. LOAD COMB 3004 COMBINATION LOAD CASE
355. 31 1.0 3 1.0 1 1.0 2 1.0 4 1.0
356. LOAD COMB 3005 COMBINATION LOAD CASE
357. 32 1.0 3 1.0 1 1.0 2 1.0 4 1.0
358. LOAD COMB 3006 COMBINATION LOAD CASE
359. 33 1.0 3 1.0 1 1.0 2 1.0 4 1.0
360. LOAD COMB 3007 COMBINATION LOAD CASE
361. 34 1.0 3 1.0 1 1.0 2 1.0 4 1.0
362. LOAD COMB 3008 COMBINATION LOAD CASE
363. 35 1.0 3 1.0 1 1.0 2 1.0 4 1.0
364. LOAD COMB 3009 COMBINATION LOAD CASE
365. 36 1.0 3 1.0 1 1.0 2 1.0 4 1.0
366. LOAD COMB 4000 COMBINATION LOAD CASE -CRACK CONTROL-MAX INSIDE
367. 27 1.0 3 1.0 1 1.0 2 0.5 5 1.0
368. LOAD COMB 4001 COMBINATION LOAD CASE
369. 28 1.0 3 1.0 1 1.0 2 0.5 5 1.0
370. LOAD COMB 4002 COMBINATION LOAD CASE
371. 29 1.0 3 1.0 1 1.0 2 0.5 5 1.0
372. LOAD COMB 4003 COMBINATION LOAD CASE
373. 30 1.0 3 1.0 1 1.0 2 0.5 5 1.0
374. LOAD COMB 4004 COMBINATION LOAD CASE
375. 31 1.0 3 1.0 1 1.0 2 0.5 5 1.0
376. LOAD COMB 4005 COMBINATION LOAD CASE
377. 32 1.0 3 1.0 1 1.0 2 0.5 5 1.0
378. LOAD COMB 4006 COMBINATION LOAD CASE
379. 33 1.0 3 1.0 1 1.0 2 0.5 5 1.0
380. LOAD COMB 4007 COMBINATION LOAD CASE
381. 34 1.0 3 1.0 1 1.0 2 0.5 5 1.0
382. LOAD COMB 4008 COMBINATION LOAD CASE
383. 35 1.0 3 1.0 1 1.0 2 0.5 5 1.0
384. LOAD COMB 4009 COMBINATION LOAD CASE
385. 36 1.0 3 1.0 1 1.0 2 0.5 5 1.0
386. LOAD COMB 5000 COMBINATION LOAD CASE -CHECK SUPPORT DISPL.
387. 27 1.0 3 1.0 1 1.0
388. LOAD COMB 5001 COMBINATION LOAD CASE
389. 28 1.0 3 1.0 1 1.0
390. LOAD COMB 5002 COMBINATION LOAD CASE
391. 29 1.0 3 1.0 1 1.0
392. LOAD COMB 5003 COMBINATION LOAD CASE
393. 30 1.0 3 1.0 1 1.0
394. LOAD COMB 5004 COMBINATION LOAD CASE
395. 31 1.0 3 1.0 1 1.0
396. LOAD COMB 5005 COMBINATION LOAD CASE
397. 32 1.0 3 1.0 1 1.0
398. LOAD COMB 5006 COMBINATION LOAD CASE
399. 33 1.0 3 1.0 1 1.0
400. LOAD COMB 5007 COMBINATION LOAD CASE
401. 34 1.0 3 1.0 1 1.0
402. LOAD COMB 5008 COMBINATION LOAD CASE
403. 35 1.0 3 1.0 1 1.0
404. LOAD COMB 5009 COMBINATION LOAD CASE
405. 36 1.0 3 1.0 1 1.0
406. LOAD COMB 6000 COMBINATION LOAD CASE -CHECK DEFLEC.
407. 27 1.0 3 1.0
408. LOAD COMB 6001 COMBINATION LOAD CASE
```

```
28 1.0 3 1.0
LOAD COMB 6002 COMBINATION LOAD CASE
29 1.0 3 1.0
LOAD COMB 6003 COMBINATION LOAD CASE
30 1.0 3 1.0
LOAD COMB 6004 COMBINATION LOAD CASE
31 1.0 3 1.0
LOAD COMB 6005 COMBINATION LOAD CASE
32 1.0 3 1.0
LOAD COMB 6006 COMBINATION LOAD CASE
33 1.0 3 1.0
LOAD COMB 6007 COMBINATION LOAD CASE
34 1.0 3 1.0
LOAD COMB 6008 COMBINATION LOAD CASE
35 1.0 3 1.0
LOAD COMB 6009 COMBINATION LOAD CASE
36 1.0 3 1.0
***
LOAD COMB 7000 COMBINATION LOAD CASE -DL
1 1.0 2 1.0 4 1.0
LOAD COMB 7001 COMBINATION LOAD CASE -DL
1 1.0 2 0.5 5 1.0
***
LOAD COMB 8000 COMBINATION LOAD CASE -LL
27 1.0 3 1.0
LOAD COMB 8001 COMBINATION LOAD CASE
28 1.0 3 1.0
LOAD COMB 8002 COMBINATION LOAD CASE
29 1.0 3 1.0
LOAD COMB 8003 COMBINATION LOAD CASE
30 1.0 3 1.0
LOAD COMB 8004 COMBINATION LOAD CASE
31 1.0 3 1.0
LOAD COMB 8005 COMBINATION LOAD CASE
32 1.0 3 1.0
LOAD COMB 8006 COMBINATION LOAD CASE
33 1.0 3 1.0
LOAD COMB 8007 COMBINATION LOAD CASE
34 1.0 3 1.0
LOAD COMB 8008 COMBINATION LOAD CASE
35 1.0 3 1.0
LOAD COMB 8009 COMBINATION LOAD CASE
36 1.0 3 1.0 1
PERFORM ANALYSIS
```

```
          P R O B L E M   S T A T I S T I C S
          -----------------------------------

  NUMBER OF JOINTS          7  NUMBER OF MEMBERS       6
  NUMBER OF PLATES          0  NUMBER OF SOLIDS        0
  NUMBER OF SURFACES        0  NUMBER OF SUPPORTS      2


        SOLVER USED IS THE OUT-OF-CORE BASIC SOLVER

  ORIGINAL/FINAL BAND-WIDTH=     5/     5/     32 DOF
TOTAL      PRIMARY LOAD CASES =    33, TOTAL DEGREES OF FREEDOM =      33
TOTAL LOAD COMBINATION  CASES =   186  SO FAR.
  SIZE OF STIFFNESS MATRIX =        2 DOUBLE  KILO-WORDS
  REQRD/AVAIL. DISK SPACE  =     12.0/      0.0 MB



453. ***LOAD LIST 1 2 4 5 7 TO 28
454. ***PRINT SUPPORT REACTION ALL
455. LOAD LIST 300 TO 315 400 TO 415 3000 TO 3009 4000 TO 4009
456. PRINT SUPPORT REACTION ALL
```

SUPPORT REACTIONS -UNIT KIP FEET STRUCTURE TYPE = SPACE

JOINT	LOAD	FORCE-X	FORCE-Y	FORCE-Z	MOM-X	MOM-Y	MOM Z
1	300	7.55	11.25	0.00	0.00	0.00	0.00
	301	7.70	11.18	0.00	0.00	0.00	0.00
	302	7.84	11.12	0.00	0.00	0.00	0.00
	303	7.96	11.05	0.00	0.00	0.00	0.00
	304	8.03	11.00	0.00	0.00	0.00	0.00
	305	8.53	14.66	0.00	0.00	0.00	0.00
	306	9.18	14.33	0.00	0.00	0.00	0.00
	307	9.74	14.00	0.00	0.00	0.00	0.00
	308	10.05	13.75	0.00	0.00	0.00	0.00
	309	10.40	13.42	0.00	0.00	0.00	0.00
	310	11.24	16.72	0.00	0.00	0.00	0.00
	311	11.89	16.12	0.00	0.00	0.00	0.00
	312	12.38	15.54	0.00	0.00	0.00	0.00
	313	12.49	15.03	0.00	0.00	0.00	0.00
	314	12.53	14.43	0.00	0.00	0.00	0.00
	315	12.33	13.83	0.00	0.00	0.00	0.00
	400	8.62	11.25	0.00	0.00	0.00	0.00
	401	8.77	11.18	0.00	0.00	0.00	0.00
	402	8.91	11.12	0.00	0.00	0.00	0.00
	403	9.03	11.05	0.00	0.00	0.00	0.00
	404	9.10	11.00	0.00	0.00	0.00	0.00
	405	9.60	14.66	0.00	0.00	0.00	0.00
	406	10.25	14.33	0.00	0.00	0.00	0.00
	407	10.80	14.00	0.00	0.00	0.00	0.00
	408	11.12	13.75	0.00	0.00	0.00	0.00
	409	11.46	13.42	0.00	0.00	0.00	0.00
	410	12.31	16.72	0.00	0.00	0.00	0.00
	411	12.96	16.12	0.00	0.00	0.00	0.00
	412	13.44	15.54	0.00	0.00	0.00	0.00
	413	13.56	15.03	0.00	0.00	0.00	0.00
	414	13.59	14.43	0.00	0.00	0.00	0.00
	415	13.40	13.83	0.00	0.00	0.00	0.00
	3000	7.67	13.28	0.00	0.00	0.00	0.00
	3001	8.14	13.07	0.00	0.00	0.00	0.00
	3002	9.07	15.71	0.00	0.00	0.00	0.00
	3003	9.90	15.29	0.00	0.00	0.00	0.00
	3004	10.51	14.94	0.00	0.00	0.00	0.00
	3005	10.98	14.59	0.00	0.00	0.00	0.00
	3006	11.41	14.17	0.00	0.00	0.00	0.00
	3007	11.66	13.76	0.00	0.00	0.00	0.00
	3008	11.74	13.34	0.00	0.00	0.00	0.00
	3009	11.65	12.92	0.00	0.00	0.00	0.00
	4000	8.73	13.28	0.00	0.00	0.00	0.00
	4001	9.21	13.07	0.00	0.00	0.00	0.00
	4002	10.14	15.71	0.00	0.00	0.00	0.00
	4003	10.97	15.29	0.00	0.00	0.00	0.00

SUPPORT REACTIONS -UNIT KIP FEET STRUCTURE TYPE = SPACE

JOINT	LOAD	FORCE-X	FORCE-Y	FORCE-Z	MOM-X	MOM-Y	MOM Z
	4004	11.58	14.94	0.00	0.00	0.00	0.00
	4005	12.05	14.59	0.00	0.00	0.00	0.00
	4006	12.47	14.17	0.00	0.00	0.00	0.00
	4007	12.73	13.76	0.00	0.00	0.00	0.00
	4008	12.81	13.34	0.00	0.00	0.00	0.00
	4009	12.72	12.92	0.00	0.00	0.00	0.00
2	300	-7.55	10.32	0.00	0.00	0.00	0.00
	301	-7.70	10.38	0.00	0.00	0.00	0.00
	302	-7.84	10.45	0.00	0.00	0.00	0.00
	303	-7.96	10.52	0.00	0.00	0.00	0.00
	304	-8.03	10.56	0.00	0.00	0.00	0.00
	305	-8.53	10.81	0.00	0.00	0.00	0.00
	306	-9.18	11.14	0.00	0.00	0.00	0.00
	307	-9.74	11.47	0.00	0.00	0.00	0.00
	308	-10.05	11.72	0.00	0.00	0.00	0.00
	309	-10.40	12.05	0.00	0.00	0.00	0.00
	310	-11.24	12.65	0.00	0.00	0.00	0.00
	311	-11.89	13.24	0.00	0.00	0.00	0.00
	312	-12.38	13.82	0.00	0.00	0.00	0.00
	313	-12.49	14.34	0.00	0.00	0.00	0.00
	314	-12.53	14.94	0.00	0.00	0.00	0.00
	315	-12.33	14.56	0.00	0.00	0.00	0.00
	400	-8.62	10.32	0.00	0.00	0.00	0.00
	401	-8.77	10.38	0.00	0.00	0.00	0.00
	402	-8.91	10.45	0.00	0.00	0.00	0.00
	403	-9.03	10.52	0.00	0.00	0.00	0.00
	404	-9.10	10.56	0.00	0.00	0.00	0.00
	405	-9.60	10.81	0.00	0.00	0.00	0.00
	406	-10.25	11.14	0.00	0.00	0.00	0.00
	407	-10.80	11.47	0.00	0.00	0.00	0.00
	408	-11.12	11.72	0.00	0.00	0.00	0.00
	409	-11.46	12.05	0.00	0.00	0.00	0.00
	410	-12.31	12.65	0.00	0.00	0.00	0.00
	411	-12.96	13.24	0.00	0.00	0.00	0.00
	412	-13.44	13.82	0.00	0.00	0.00	0.00
	413	-13.56	14.34	0.00	0.00	0.00	0.00
	414	-13.59	14.94	0.00	0.00	0.00	0.00
	415	-13.40	14.56	0.00	0.00	0.00	0.00
	3000	-7.67	10.37	0.00	0.00	0.00	0.00
	3001	-8.14	10.57	0.00	0.00	0.00	0.00
	3002	-9.07	10.99	0.00	0.00	0.00	0.00
	3003	-9.90	11.40	0.00	0.00	0.00	0.00
	3004	-10.51	11.75	0.00	0.00	0.00	0.00
	3005	-10.98	12.10	0.00	0.00	0.00	0.00
	3006	-11.41	12.52	0.00	0.00	0.00	0.00
	3007	-11.66	12.93	0.00	0.00	0.00	0.00

SUPPORT REACTIONS -UNIT KIP FEET STRUCTURE TYPE = SPACE

JOINT	LOAD	FORCE-X	FORCE-Y	FORCE-Z	MOM-X	MOM-Y	MOM Z
	3008	-11.74	13.35	0.00	0.00	0.00	0.00
	3009	-11.65	13.77	0.00	0.00	0.00	0.00
	4000	-8.73	10.37	0.00	0.00	0.00	0.00
	4001	-9.21	10.57	0.00	0.00	0.00	0.00
	4002	-10.14	10.99	0.00	0.00	0.00	0.00
	4003	-10.97	11.40	0.00	0.00	0.00	0.00
	4004	-11.58	11.75	0.00	0.00	0.00	0.00
	4005	-12.05	12.10	0.00	0.00	0.00	0.00
	4006	-12.47	12.52	0.00	0.00	0.00	0.00
	4007	-12.73	12.93	0.00	0.00	0.00	0.00
	4008	-12.81	13.35	0.00	0.00	0.00	0.00
	4009	-12.72	13.77	0.00	0.00	0.00	0.00

********** END OF LATEST ANALYSIS RESULT **********

```
457. ***DL
458. LOAD LIST 700 701 7000 7001
459. PRINT SUPPORT REACTION ALL
```

SUPPORT REACTIONS -UNIT KIP FEET STRUCTURE TYPE = SPACE

JOINT	LOAD	FORCE-X	FORCE-Y	FORCE-Z	MOM-X	MOM-Y	MOM Z
1	700	6.20	8.95	0.00	0.00	0.00	0.00
	701	7.27	8.95	0.00	0.00	0.00	0.00
	7000	6.20	8.95	0.00	0.00	0.00	0.00
	7001	7.27	8.95	0.00	0.00	0.00	0.00
2	700	-6.20	8.95	0.00	0.00	0.00	0.00
	701	-7.27	8.95	0.00	0.00	0.00	0.00
	7000	-6.20	8.95	0.00	0.00	0.00	0.00
	7001	-7.27	8.95	0.00	0.00	0.00	0.00

********** END OF LATEST ANALYSIS RESULT **********

```
460. ***LL
461. LOAD LIST 800 TO 815 8000 TO 8009
462. PRINT SUPPORT REACTION ALL
```

SUPPORT REACTIONS -UNIT KIP FEET STRUCTURE TYPE = SPACE

JOINT	LOAD	FORCE-X	FORCE-Y	FORCE-Z	MOM-X	MOM-Y	MOM Z
1	800	1.34	2.30	0.00	0.00	0.00	0.00
	801	1.50	2.23	0.00	0.00	0.00	0.00
	802	1.64	2.17	0.00	0.00	0.00	0.00
	803	1.76	2.10	0.00	0.00	0.00	0.00
	804	1.83	2.05	0.00	0.00	0.00	0.00
	805	2.33	5.71	0.00	0.00	0.00	0.00
	806	2.98	5.38	0.00	0.00	0.00	0.00
	807	3.53	5.05	0.00	0.00	0.00	0.00
	808	3.85	4.80	0.00	0.00	0.00	0.00
	809	4.19	4.47	0.00	0.00	0.00	0.00
	810	5.04	7.77	0.00	0.00	0.00	0.00
	811	5.69	7.17	0.00	0.00	0.00	0.00
	812	6.17	6.60	0.00	0.00	0.00	0.00
	813	6.29	6.08	0.00	0.00	0.00	0.00
	814	6.32	5.48	0.00	0.00	0.00	0.00
	815	6.13	4.88	0.00	0.00	0.00	0.00
	8000	1.46	4.33	0.00	0.00	0.00	0.00
	8001	1.94	4.12	0.00	0.00	0.00	0.00
	8002	2.87	6.76	0.00	0.00	0.00	0.00
	8003	3.70	6.34	0.00	0.00	0.00	0.00
	8004	4.31	5.99	0.00	0.00	0.00	0.00
	8005	4.78	5.64	0.00	0.00	0.00	0.00
	8006	5.20	5.22	0.00	0.00	0.00	0.00
	8007	5.45	4.81	0.00	0.00	0.00	0.00
	8008	5.54	4.39	0.00	0.00	0.00	0.00
	8009	5.45	3.97	0.00	0.00	0.00	0.00
2	800	-1.34	1.37	0.00	0.00	0.00	0.00
	801	-1.50	1.43	0.00	0.00	0.00	0.00
	802	-1.64	1.50	0.00	0.00	0.00	0.00
	803	-1.76	1.57	0.00	0.00	0.00	0.00
	804	-1.83	1.61	0.00	0.00	0.00	0.00
	805	-2.33	1.86	0.00	0.00	0.00	0.00
	806	-2.98	2.19	0.00	0.00	0.00	0.00
	807	-3.53	2.52	0.00	0.00	0.00	0.00
	808	-3.85	2.77	0.00	0.00	0.00	0.00
	809	-4.19	3.10	0.00	0.00	0.00	0.00
	810	-5.04	3.70	0.00	0.00	0.00	0.00
	811	-5.69	4.30	0.00	0.00	0.00	0.00
	812	-6.17	4.87	0.00	0.00	0.00	0.00
	813	-6.29	5.39	0.00	0.00	0.00	0.00
	814	-6.32	5.99	0.00	0.00	0.00	0.00
	815	-6.13	5.61	0.00	0.00	0.00	0.00
	8000	-1.46	1.42	0.00	0.00	0.00	0.00
	8001	-1.94	1.62	0.00	0.00	0.00	0.00
	8002	-2.87	2.04	0.00	0.00	0.00	0.00
	8003	-3.70	2.45	0.00	0.00	0.00	0.00

SUPPORT REACTIONS -UNIT KIP FEET STRUCTURE TYPE = SPACE

JOINT	LOAD	FORCE-X	FORCE-Y	FORCE-Z	MOM-X	MOM-Y	MOM Z
	8004	-4.31	2.80	0.00	0.00	0.00	0.00
	8005	-4.78	3.15	0.00	0.00	0.00	0.00
	8006	-5.20	3.57	0.00	0.00	0.00	0.00
	8007	-5.45	3.98	0.00	0.00	0.00	0.00
	8008	-5.54	4.40	0.00	0.00	0.00	0.00
	8009	-5.45	4.82	0.00	0.00	0.00	0.00

********** END OF LATEST ANALYSIS RESULT **********

```
463. *** BEAM DISPLACEMENTS AT CL FROM 1.0LL
464. LOAD LIST 600 TO 615 6000 TO 6009
465. PRINT JOINT DISPLACEMENTS LIST 5
```

JOINT DISPLACEMENT (INCH RADIANS) STRUCTURE TYPE = SPACE

JOINT	LOAD	X-TRANS	Y-TRANS	Z-TRANS	X-ROTAN	Y-ROTAN	Z-ROTAN
5	600	0.04145	-0.12540	0.00000	0.00000	0.00000	0.00001
	601	0.04853	-0.13731	0.00000	0.00000	0.00000	0.00004
	602	0.05435	-0.14984	0.00000	0.00000	0.00000	0.00007
	603	0.05860	-0.16244	0.00000	0.00000	0.00000	0.00010
	604	0.06047	-0.17080	0.00000	0.00000	0.00000	0.00010
	605	0.08264	-0.21186	0.00000	0.00000	0.00000	0.00019
	606	0.10912	-0.26850	0.00000	0.00000	0.00000	0.00030
	607	0.12898	-0.32309	0.00000	0.00000	0.00000	0.00036
	608	0.13748	-0.35680	0.00000	0.00000	0.00000	0.00034
	609	0.14399	-0.39866	0.00000	0.00000	0.00000	0.00033
	610	0.17379	-0.47554	0.00000	0.00000	0.00000	0.00041
	611	0.19265	-0.54087	0.00000	0.00000	0.00000	0.00040
	612	0.20252	-0.59289	0.00000	0.00000	0.00000	0.00027
	613	0.19844	-0.60395	0.00000	0.00000	0.00000	0.00009
	614	0.19060	-0.60939	0.00000	0.00000	0.00000	0.00000
	615	0.17600	-0.59424	0.00000	0.00000	0.00000	-0.00008
	6000	0.04731	-0.13329	0.00000	0.00000	0.00000	0.00004
	6001	0.06947	-0.17055	0.00000	0.00000	0.00000	0.00014
	6002	0.11146	-0.24593	0.00000	0.00000	0.00000	0.00034
	6003	0.14437	-0.32406	0.00000	0.00000	0.00000	0.00051
	6004	0.16526	-0.38980	0.00000	0.00000	0.00000	0.00061
	6005	0.17624	-0.45004	0.00000	0.00000	0.00000	0.00063
	6006	0.18091	-0.51054	0.00000	0.00000	0.00000	0.00056
	6007	0.17685	-0.55147	0.00000	0.00000	0.00000	0.00034
	6008	0.16594	-0.56575	0.00000	0.00000	0.00000	0.00000
	6009	0.14996	-0.55070	0.00000	0.00000	0.00000	-0.00035

********** END OF LATEST ANALYSIS RESULT **********

```
466. *** SUPPORT DISPLACEMENTS FROM 1.0DL+1.0LL
467. LOAD LIST 500 TO 515 5000 TO 5009
468. PRINT JOINT DISPLACEMENTS LIST 2
```

JOINT DISPLACEMENT (INCH RADIANS) STRUCTURE TYPE = SPACE

JOINT	LOAD	X-TRANS	Y-TRANS	Z-TRANS	X-ROTAN	Y-ROTAN	Z-ROTAN
2	500	0.51814	0.00000	0.00000	0.00000	0.00000	0.00373
	501	0.52731	0.00000	0.00000	0.00000	0.00000	0.00376
	502	0.53565	0.00000	0.00000	0.00000	0.00000	0.00380
	503	0.54284	0.00000	0.00000	0.00000	0.00000	0.00384
	504	0.54696	0.00000	0.00000	0.00000	0.00000	0.00387
	505	0.57729	0.00000	0.00000	0.00000	0.00000	0.00398
	506	0.61595	0.00000	0.00000	0.00000	0.00000	0.00415
	507	0.64930	0.00000	0.00000	0.00000	0.00000	0.00433
	508	0.66820	0.00000	0.00000	0.00000	0.00000	0.00448
	509	0.68898	0.00000	0.00000	0.00000	0.00000	0.00469
	510	0.73960	0.00000	0.00000	0.00000	0.00000	0.00499
	511	0.77871	0.00000	0.00000	0.00000	0.00000	0.00528
	512	0.80787	0.00000	0.00000	0.00000	0.00000	0.00556
	513	0.81474	0.00000	0.00000	0.00000	0.00000	0.00573
	514	0.81675	0.00000	0.00000	0.00000	0.00000	0.00588
	515	0.80515	0.00000	0.00000	0.00000	0.00000	0.00593
	5000	0.52517	0.00000	0.00000	0.00000	0.00000	0.00375
	5001	0.55385	0.00000	0.00000	0.00000	0.00000	0.00383
	5002	0.60965	0.00000	0.00000	0.00000	0.00000	0.00402
	5003	0.65922	0.00000	0.00000	0.00000	0.00000	0.00425
	5004	0.69594	0.00000	0.00000	0.00000	0.00000	0.00447
	5005	0.72427	0.00000	0.00000	0.00000	0.00000	0.00472
	5006	0.74959	0.00000	0.00000	0.00000	0.00000	0.00502
	5007	0.76473	0.00000	0.00000	0.00000	0.00000	0.00531
	5008	0.76969	0.00000	0.00000	0.00000	0.00000	0.00555
	5009	0.76446	0.00000	0.00000	0.00000	0.00000	0.00572

********** END OF LATEST ANALYSIS RESULT **********

469. LOAD LIST 300 TO 315 400 TO 415 3000 TO 3009 4000 TO 4009
470. PRINT MEMBER FORCES ALL

MEMBER END FORCES STRUCTURE TYPE = SPACE

ALL UNITS ARE -- KIP FEET (LOCAL)

MEMBER	LOAD	JT	AXIAL	SHEAR-Y	SHEAR-Z	TORSION	MOM-Y	MOM-Z
1	300	1	12.33	-5.62	0.00	0.00	0.00	0.00
		3	-11.57	8.65	0.00	0.00	0.00	-33.38
	301	1	12.29	-5.78	0.00	0.00	0.00	0.00
		3	-11.53	8.81	0.00	0.00	0.00	-34.13
	302	1	12.24	-5.93	0.00	0.00	0.00	0.00
		3	-11.49	8.96	0.00	0.00	0.00	-34.81
	303	1	12.20	-6.05	0.00	0.00	0.00	0.00
		3	-11.45	9.09	0.00	0.00	0.00	-35.40
	304	1	12.17	-6.13	0.00	0.00	0.00	0.00
		3	-11.41	9.17	0.00	0.00	0.00	-35.75
	305	1	15.86	-6.03	0.00	0.00	0.00	0.00
		3	-15.10	9.07	0.00	0.00	0.00	-35.30
	306	1	15.63	-6.72	0.00	0.00	0.00	0.00
		3	-14.88	9.76	0.00	0.00	0.00	-38.48
	307	1	15.40	-7.32	0.00	0.00	0.00	0.00
		3	-14.64	10.36	0.00	0.00	0.00	-41.25
	308	1	15.20	-7.68	0.00	0.00	0.00	0.00
		3	-14.45	10.71	0.00	0.00	0.00	-42.87
	309	1	14.93	-8.07	0.00	0.00	0.00	0.00
		3	-14.18	11.11	0.00	0.00	0.00	-44.69
	310	1	18.33	-8.37	0.00	0.00	0.00	0.00
		3	-17.57	11.40	0.00	0.00	0.00	-46.05
	311	1	17.84	-9.11	0.00	0.00	0.00	0.00
		3	-17.09	12.14	0.00	0.00	0.00	-49.46
	312	1	17.35	-9.68	0.00	0.00	0.00	0.00
		3	-16.60	12.72	0.00	0.00	0.00	-52.10
	313	1	16.86	-9.88	0.00	0.00	0.00	0.00
		3	-16.11	12.91	0.00	0.00	0.00	-53.01
	314	1	16.28	-10.01	0.00	0.00	0.00	0.00
		3	-15.53	13.04	0.00	0.00	0.00	-53.61
	315	1	15.66	-9.91	0.00	0.00	0.00	0.00
		3	-14.90	12.95	0.00	0.00	0.00	-53.18
	400	1	12.50	-6.67	0.00	0.00	0.00	0.00
		3	-11.30	7.00	0.00	0.00	0.00	-31.25
	401	1	12.46	-6.83	0.00	0.00	0.00	0.00
		3	-11.26	7.16	0.00	0.00	0.00	-32.00
	402	1	12.42	-6.98	0.00	0.00	0.00	0.00
		3	-11.22	7.31	0.00	0.00	0.00	-32.68
	403	1	12.37	-7.11	0.00	0.00	0.00	0.00
		3	-11.17	7.44	0.00	0.00	0.00	-33.27
	404	1	12.34	-7.18	0.00	0.00	0.00	0.00
		3	-11.14	7.52	0.00	0.00	0.00	-33.62

MEMBER END FORCES STRUCTURE TYPE = SPACE

ALL UNITS ARE -- KIP FEET (LOCAL)

MEMBER	LOAD	JT	AXIAL	SHEAR-Y	SHEAR-Z	TORSION	MOM-Y	MOM-Z
	405	1	16.03	-7.09	0.00	0.00	0.00	0.00
		3	-14.83	7.42	0.00	0.00	0.00	-33.17
	406	1	15.81	-7.78	0.00	0.00	0.00	0.00
		3	-14.61	8.11	0.00	0.00	0.00	-36.35
	407	1	15.57	-8.38	0.00	0.00	0.00	0.00
		3	-14.37	8.71	0.00	0.00	0.00	-39.12
	408	1	15.38	-8.73	0.00	0.00	0.00	0.00
		3	-14.18	9.06	0.00	0.00	0.00	-40.74
	409	1	15.10	-9.12	0.00	0.00	0.00	0.00
		3	-13.91	9.46	0.00	0.00	0.00	-42.56
	410	1	18.50	-9.42	0.00	0.00	0.00	0.00
		3	-17.30	9.75	0.00	0.00	0.00	-43.92
	411	1	18.02	-10.16	0.00	0.00	0.00	0.00
		3	-16.82	10.49	0.00	0.00	0.00	-47.33
	412	1	17.53	-10.73	0.00	0.00	0.00	0.00
		3	-16.33	11.07	0.00	0.00	0.00	-49.97
	413	1	17.04	-10.93	0.00	0.00	0.00	0.00
		3	-15.84	11.26	0.00	0.00	0.00	-50.88
	414	1	16.45	-11.06	0.00	0.00	0.00	0.00
		3	-15.25	11.39	0.00	0.00	0.00	-51.48
	415	1	15.83	-10.97	0.00	0.00	0.00	0.00
		3	-14.63	11.30	0.00	0.00	0.00	-51.05
	3000	1	14.35	-5.40	0.00	0.00	0.00	0.00
		3	-13.59	8.44	0.00	0.00	0.00	-32.40
	3001	1	14.22	-5.91	0.00	0.00	0.00	0.00
		3	-13.47	8.94	0.00	0.00	0.00	-34.72
	3002	1	16.97	-6.40	0.00	0.00	0.00	0.00
		3	-16.22	9.43	0.00	0.00	0.00	-36.97
	3003	1	16.70	-7.28	0.00	0.00	0.00	0.00
		3	-15.95	10.31	0.00	0.00	0.00	-41.03
	3004	1	16.45	-7.94	0.00	0.00	0.00	0.00
		3	-15.70	10.97	0.00	0.00	0.00	-44.08
	3005	1	16.18	-8.46	0.00	0.00	0.00	0.00
		3	-15.43	11.50	0.00	0.00	0.00	-46.49
	3006	1	15.84	-8.95	0.00	0.00	0.00	0.00
		3	-15.09	11.98	0.00	0.00	0.00	-48.72
	3007	1	15.47	-9.26	0.00	0.00	0.00	0.00
		3	-14.72	12.30	0.00	0.00	0.00	-50.17
	3008	1	15.07	-9.41	0.00	0.00	0.00	0.00
		3	-14.32	12.45	0.00	0.00	0.00	-50.86
	3009	1	14.65	-9.39	0.00	0.00	0.00	0.00
		3	-13.90	12.43	0.00	0.00	0.00	-50.78
	4000	1	14.52	-6.45	0.00	0.00	0.00	0.00
		3	-13.32	6.79	0.00	0.00	0.00	-30.27
	4001	1	14.40	-6.96	0.00	0.00	0.00	0.00
		3	-13.20	7.29	0.00	0.00	0.00	-32.59

MEMBER END FORCES STRUCTURE TYPE = SPACE

ALL UNITS ARE -- KIP FEET (LOCAL)

MEMBER	LOAD	JT	AXIAL	SHEAR-Y	SHEAR-Z	TORSION	MOM-Y	MOM-Z
	4002	1	17.15	-7.45	0.00	0.00	0.00	0.00
		3	-15.95	7.78	0.00	0.00	0.00	-34.84
	4003	1	16.87	-8.33	0.00	0.00	0.00	0.00
		3	-15.68	8.66	0.00	0.00	0.00	-38.90
	4004	1	16.63	-8.99	0.00	0.00	0.00	0.00
		3	-15.43	9.32	0.00	0.00	0.00	-41.95
	4005	1	16.36	-9.51	0.00	0.00	0.00	0.00
		3	-15.16	9.85	0.00	0.00	0.00	-44.36
	4006	1	16.02	-10.00	0.00	0.00	0.00	0.00
		3	-14.82	10.33	0.00	0.00	0.00	-46.59
	4007	1	15.65	-10.32	0.00	0.00	0.00	0.00
		3	-14.45	10.65	0.00	0.00	0.00	-48.04
	4008	1	15.25	-10.46	0.00	0.00	0.00	0.00
		3	-14.05	10.80	0.00	0.00	0.00	-48.73
	4009	1	14.82	-10.45	0.00	0.00	0.00	0.00
		3	-13.62	10.78	0.00	0.00	0.00	-48.65
2	300	2	11.41	-5.77	0.00	0.00	0.00	0.00
		7	-10.66	8.80	0.00	0.00	0.00	-34.08
	301	2	11.50	-5.91	0.00	0.00	0.00	0.00
		7	-10.75	8.94	0.00	0.00	0.00	-34.73
	302	2	11.59	-6.03	0.00	0.00	0.00	0.00
		7	-10.83	9.07	0.00	0.00	0.00	-35.31
	303	2	11.67	-6.14	0.00	0.00	0.00	0.00
		7	-10.92	9.18	0.00	0.00	0.00	-35.80
	304	2	11.73	-6.20	0.00	0.00	0.00	0.00
		7	-10.98	9.24	0.00	0.00	0.00	-36.08
	305	2	12.05	-6.66	0.00	0.00	0.00	0.00
		7	-11.30	9.70	0.00	0.00	0.00	-38.19
	306	2	12.48	-7.24	0.00	0.00	0.00	0.00
		7	-11.73	10.28	0.00	0.00	0.00	-40.87
	307	2	12.90	-7.74	0.00	0.00	0.00	0.00
		7	-12.15	10.77	0.00	0.00	0.00	-43.15
	308	2	13.20	-8.01	0.00	0.00	0.00	0.00
		7	-12.44	11.04	0.00	0.00	0.00	-44.40
	309	2	13.58	-8.30	0.00	0.00	0.00	0.00
		7	-12.83	11.33	0.00	0.00	0.00	-45.72
	310	2	14.31	-9.03	0.00	0.00	0.00	0.00
		7	-13.56	12.07	0.00	0.00	0.00	-49.10
	311	2	15.00	-9.58	0.00	0.00	0.00	0.00
		7	-14.25	12.61	0.00	0.00	0.00	-51.62
	312	2	15.65	-9.96	0.00	0.00	0.00	0.00
		7	-14.90	13.00	0.00	0.00	0.00	-53.39
	313	2	16.18	-9.99	0.00	0.00	0.00	0.00
		7	-15.43	13.03	0.00	0.00	0.00	-53.53

MEMBER END FORCES STRUCTURE TYPE = SPACE

ALL UNITS ARE -- KIP FEET (LOCAL)

MEMBER	LOAD	JT	AXIAL	SHEAR-Y	SHEAR-Z	TORSION	MOM-Y	MOM-Z
	314	2	16.78	-9.93	0.00	0.00	0.00	0.00
		7	-16.02	12.96	0.00	0.00	0.00	-53.23
	315	2	16.37	-9.80	0.00	0.00	0.00	0.00
		7	-15.62	12.83	0.00	0.00	0.00	-52.63
	400	2	11.58	-6.82	0.00	0.00	0.00	0.00
		7	-10.38	7.15	0.00	0.00	0.00	-31.95
	401	2	11.67	-6.96	0.00	0.00	0.00	0.00
		7	-10.47	7.29	0.00	0.00	0.00	-32.60
	402	2	11.76	-7.09	0.00	0.00	0.00	0.00
		7	-10.56	7.42	0.00	0.00	0.00	-33.18
	403	2	11.85	-7.19	0.00	0.00	0.00	0.00
		7	-10.65	7.53	0.00	0.00	0.00	-33.67
	404	2	11.90	-7.25	0.00	0.00	0.00	0.00
		7	-10.70	7.59	0.00	0.00	0.00	-33.95
	405	2	12.23	-7.71	0.00	0.00	0.00	0.00
		7	-11.03	8.05	0.00	0.00	0.00	-36.06
	406	2	12.66	-8.30	0.00	0.00	0.00	0.00
		7	-11.46	8.63	0.00	0.00	0.00	-38.74
	407	2	13.07	-8.79	0.00	0.00	0.00	0.00
		7	-11.87	9.12	0.00	0.00	0.00	-41.02
	408	2	13.37	-9.06	0.00	0.00	0.00	0.00
		7	-12.17	9.39	0.00	0.00	0.00	-42.27
	409	2	13.76	-9.35	0.00	0.00	0.00	0.00
		7	-12.56	9.68	0.00	0.00	0.00	-43.59
	410	2	14.48	-10.08	0.00	0.00	0.00	0.00
		7	-13.28	10.42	0.00	0.00	0.00	-46.97
	411	2	15.18	-10.63	0.00	0.00	0.00	0.00
		7	-13.98	10.96	0.00	0.00	0.00	-49.49
	412	2	15.83	-11.01	0.00	0.00	0.00	0.00
		7	-14.63	11.35	0.00	0.00	0.00	-51.26
	413	2	16.35	-11.04	0.00	0.00	0.00	0.00
		7	-15.15	11.38	0.00	0.00	0.00	-51.40
	414	2	16.95	-10.98	0.00	0.00	0.00	0.00
		7	-15.75	11.31	0.00	0.00	0.00	-51.10
	415	2	16.55	-10.85	0.00	0.00	0.00	0.00
		7	-15.35	11.18	0.00	0.00	0.00	-50.50
	3000	2	11.48	-5.88	0.00	0.00	0.00	0.00
		7	-10.72	8.91	0.00	0.00	0.00	-34.58
	3001	2	11.76	-6.31	0.00	0.00	0.00	0.00
		7	-11.00	9.35	0.00	0.00	0.00	-36.60
	3002	2	12.32	-7.16	0.00	0.00	0.00	0.00
		7	-11.56	10.20	0.00	0.00	0.00	-40.51
	3003	2	12.86	-7.91	0.00	0.00	0.00	0.00
		7	-12.11	10.95	0.00	0.00	0.00	-43.95
	3004	2	13.30	-8.46	0.00	0.00	0.00	0.00
		7	-12.55	11.49	0.00	0.00	0.00	-46.47

MEMBER END FORCES STRUCTURE TYPE = SPACE

ALL UNITS ARE -- KIP FEET (LOCAL)

MEMBER	LOAD	JT	AXIAL	SHEAR-Y	SHEAR-Z	TORSION	MOM-Y	MOM-Z
	3005	2	13.73	-8.87	0.00	0.00	0.00	0.00
		7	-12.98	11.90	0.00	0.00	0.00	-48.35
	3006	2	14.21	-9.22	0.00	0.00	0.00	0.00
		7	-13.46	12.25	0.00	0.00	0.00	-49.96
	3007	2	14.66	-9.40	0.00	0.00	0.00	0.00
		7	-13.91	12.43	0.00	0.00	0.00	-50.79
	3008	2	15.09	-9.41	0.00	0.00	0.00	0.00
		7	-14.33	12.45	0.00	0.00	0.00	-50.85
	3009	2	15.48	-9.26	0.00	0.00	0.00	0.00
		7	-14.73	12.29	0.00	0.00	0.00	-50.15
	4000	2	11.65	-6.93	0.00	0.00	0.00	0.00
		7	-10.45	7.26	0.00	0.00	0.00	-32.45
	4001	2	11.93	-7.37	0.00	0.00	0.00	0.00
		7	-10.73	7.70	0.00	0.00	0.00	-34.47
	4002	2	12.49	-8.22	0.00	0.00	0.00	0.00
		7	-11.29	8.55	0.00	0.00	0.00	-38.38
	4003	2	13.03	-8.96	0.00	0.00	0.00	0.00
		7	-11.83	9.30	0.00	0.00	0.00	-41.82
	4004	2	13.48	-9.51	0.00	0.00	0.00	0.00
		7	-12.28	9.84	0.00	0.00	0.00	-44.34
	4005	2	13.90	-9.92	0.00	0.00	0.00	0.00
		7	-12.70	10.25	0.00	0.00	0.00	-46.22
	4006	2	14.38	-10.27	0.00	0.00	0.00	0.00
		7	-13.18	10.60	0.00	0.00	0.00	-47.83
	4007	2	14.83	-10.45	0.00	0.00	0.00	0.00
		7	-13.64	10.78	0.00	0.00	0.00	-48.66
	4008	2	15.26	-10.46	0.00	0.00	0.00	0.00
		7	-14.06	10.80	0.00	0.00	0.00	-48.72
	4009	2	15.66	-10.31	0.00	0.00	0.00	0.00
		7	-14.46	10.64	0.00	0.00	0.00	-48.01
3	300	3	11.58	8.64	0.00	0.00	0.00	30.05
		4	-10.96	-3.66	0.00	0.00	0.00	20.68
	301	3	11.73	8.56	0.00	0.00	0.00	30.80
		4	-11.10	-3.57	0.00	0.00	0.00	22.07
	302	3	11.86	8.47	0.00	0.00	0.00	31.48
		4	-11.23	-3.49	0.00	0.00	0.00	23.54
	303	3	11.97	8.39	0.00	0.00	0.00	32.08
		4	-11.34	-3.41	0.00	0.00	0.00	25.12
	304	3	12.03	8.34	0.00	0.00	0.00	32.44
		4	-11.53	-4.32	0.00	0.00	0.00	24.30
	305	3	12.98	11.90	0.00	0.00	0.00	31.03
		4	-12.00	-4.02	0.00	0.00	0.00	26.83
	306	3	13.58	11.50	0.00	0.00	0.00	34.24
		4	-12.60	-3.61	0.00	0.00	0.00	31.54

MEMBER END FORCES STRUCTURE TYPE = SPACE

ALL UNITS ARE -- KIP FEET (LOCAL)

MEMBER	LOAD	JT	AXIAL	SHEAR-Y	SHEAR-Z	TORSION	MOM-Y	MOM-Z
	307	3	14.09	11.10	0.00	0.00	0.00	37.05
		4	-13.11	-3.21	0.00	0.00	0.00	36.75
	308	3	14.38	10.81	0.00	0.00	0.00	38.71
		4	-13.87	-6.79	0.00	0.00	0.00	40.37
	309	3	14.68	10.44	0.00	0.00	0.00	40.59
		4	-14.18	-6.42	0.00	0.00	0.00	35.12
	310	3	15.92	13.61	0.00	0.00	0.00	41.05
		4	-14.94	-5.72	0.00	0.00	0.00	36.09
	311	3	16.50	12.94	0.00	0.00	0.00	44.56
		4	-15.51	-5.05	0.00	0.00	0.00	38.11
	312	3	16.91	12.31	0.00	0.00	0.00	47.30
		4	-15.92	-4.42	0.00	0.00	0.00	41.27
	313	3	16.96	11.78	0.00	0.00	0.00	48.33
		4	-16.46	-7.76	0.00	0.00	0.00	39.48
	314	3	16.92	11.18	0.00	0.00	0.00	49.08
		4	-16.41	-7.16	0.00	0.00	0.00	33.33
	315	3	16.65	10.61	0.00	0.00	0.00	48.81
		4	-16.15	-6.59	0.00	0.00	0.00	28.46
	400	3	9.92	8.85	0.00	0.00	0.00	28.05
		4	-9.30	-3.86	0.00	0.00	0.00	24.55
	401	3	10.07	8.76	0.00	0.00	0.00	28.80
		4	-9.44	-3.78	0.00	0.00	0.00	25.94
	402	3	10.20	8.68	0.00	0.00	0.00	29.49
		4	-9.57	-3.70	0.00	0.00	0.00	27.41
	403	3	10.31	8.60	0.00	0.00	0.00	30.09
		4	-9.68	-3.62	0.00	0.00	0.00	28.99
	404	3	10.37	8.55	0.00	0.00	0.00	30.44
		4	-9.87	-4.53	0.00	0.00	0.00	28.17
	405	3	11.32	12.11	0.00	0.00	0.00	29.04
		4	-10.34	-4.22	0.00	0.00	0.00	30.70
	406	3	11.92	11.70	0.00	0.00	0.00	32.25
		4	-10.94	-3.82	0.00	0.00	0.00	35.41
	407	3	12.43	11.31	0.00	0.00	0.00	35.06
		4	-11.45	-3.42	0.00	0.00	0.00	40.62
	408	3	12.72	11.02	0.00	0.00	0.00	36.71
		4	-12.21	-7.00	0.00	0.00	0.00	44.24
	409	3	13.02	10.65	0.00	0.00	0.00	38.59
		4	-12.52	-6.63	0.00	0.00	0.00	38.99
	410	3	14.26	13.82	0.00	0.00	0.00	39.05
		4	-13.28	-5.93	0.00	0.00	0.00	39.96
	411	3	14.84	13.15	0.00	0.00	0.00	42.56
		4	-13.85	-5.26	0.00	0.00	0.00	41.98
	412	3	15.25	12.51	0.00	0.00	0.00	45.31
		4	-14.26	-4.62	0.00	0.00	0.00	45.14
	413	3	15.30	11.99	0.00	0.00	0.00	46.33
		4	-14.80	-7.97	0.00	0.00	0.00	43.35

MEMBER END FORCES STRUCTURE TYPE = SPACE

ALL UNITS ARE -- KIP FEET (LOCAL)

MEMBER	LOAD	JT	AXIAL	SHEAR-Y	SHEAR-Z	TORSION	MOM-Y	MOM-Z
	414	3	15.26	11.39	0.00	0.00	0.00	47.08
		4	-14.75	-7.37	0.00	0.00	0.00	37.20
	415	3	14.99	10.82	0.00	0.00	0.00	46.82
		4	-14.49	-6.80	0.00	0.00	0.00	32.33
	3000	3	11.95	10.64	0.00	0.00	0.00	28.54
		4	-11.07	-3.59	0.00	0.00	0.00	21.63
	3001	3	12.40	10.37	0.00	0.00	0.00	30.88
		4	-11.52	-3.33	0.00	0.00	0.00	25.98
	3002	3	13.65	12.87	0.00	0.00	0.00	32.40
		4	-12.39	-2.80	0.00	0.00	0.00	34.85
	3003	3	14.42	12.36	0.00	0.00	0.00	36.50
		4	-13.16	-2.29	0.00	0.00	0.00	44.28
	3004	3	14.98	11.94	0.00	0.00	0.00	39.58
		4	-14.10	-4.89	0.00	0.00	0.00	46.54
	3005	3	15.41	11.53	0.00	0.00	0.00	42.04
		4	-14.90	-7.51	0.00	0.00	0.00	43.52
	3006	3	15.77	11.06	0.00	0.00	0.00	44.34
		4	-15.27	-7.05	0.00	0.00	0.00	37.01
	3007	3	15.97	10.62	0.00	0.00	0.00	45.88
		4	-15.47	-6.60	0.00	0.00	0.00	31.46
	3008	3	16.00	10.20	0.00	0.00	0.00	46.67
		4	-15.50	-6.18	0.00	0.00	0.00	26.84
	3009	3	15.86	9.79	0.00	0.00	0.00	46.69
		4	-15.36	-5.78	0.00	0.00	0.00	23.18
	4000	3	10.29	10.85	0.00	0.00	0.00	26.55
		4	-9.41	-3.80	0.00	0.00	0.00	25.50
	4001	3	10.74	10.58	0.00	0.00	0.00	28.89
		4	-9.86	-3.54	0.00	0.00	0.00	29.85
	4002	3	11.99	13.08	0.00	0.00	0.00	30.40
		4	-10.73	-3.01	0.00	0.00	0.00	38.72
	4003	3	12.76	12.57	0.00	0.00	0.00	34.50
		4	-11.50	-2.50	0.00	0.00	0.00	48.15
	4004	3	13.32	12.15	0.00	0.00	0.00	37.58
		4	-12.44	-5.10	0.00	0.00	0.00	50.41
	4005	3	13.75	11.74	0.00	0.00	0.00	40.04
		4	-13.24	-7.72	0.00	0.00	0.00	47.39
	4006	3	14.11	11.27	0.00	0.00	0.00	42.34
		4	-13.61	-7.25	0.00	0.00	0.00	40.88
	4007	3	14.31	10.83	0.00	0.00	0.00	43.89
		4	-13.81	-6.81	0.00	0.00	0.00	35.33
	4008	3	14.34	10.40	0.00	0.00	0.00	44.67
		4	-13.84	-6.39	0.00	0.00	0.00	30.71
	4009	3	14.20	10.00	0.00	0.00	0.00	44.70
		4	-13.70	-5.98	0.00	0.00	0.00	27.05
4	300	4	10.42	4.99	0.00	0.00	0.00	-20.68
		5	-10.42	0.02	0.00	0.00	0.00	50.47

MEMBER END FORCES STRUCTURE TYPE = SPACE

ALL UNITS ARE -- KIP FEET (LOCAL)

MEMBER	LOAD	JT	AXIAL	SHEAR-Y	SHEAR-Z	TORSION	MOM-Y	MOM-Z
	301	4	10.58	4.92	0.00	0.00	0.00	-22.07
		5	-10.58	0.09	0.00	0.00	0.00	51.07
	302	4	10.71	4.85	0.00	0.00	0.00	-23.54
		5	-10.71	0.15	0.00	0.00	0.00	51.74
	303	4	10.83	4.79	0.00	0.00	0.00	-25.12
		5	-10.83	0.22	0.00	0.00	0.00	52.52
	304	4	10.90	5.72	0.00	0.00	0.00	-24.30
		5	-10.90	0.27	0.00	0.00	0.00	53.15
	305	4	11.41	5.47	0.00	0.00	0.00	-26.83
		5	-11.41	0.51	0.00	0.00	0.00	55.67
	306	4	12.05	5.14	0.00	0.00	0.00	-31.54
		5	-12.05	0.84	0.00	0.00	0.00	59.34
	307	4	12.61	4.81	0.00	0.00	0.00	-36.75
		5	-12.61	1.17	0.00	0.00	0.00	63.51
	308	4	12.92	8.46	0.00	0.00	0.00	-40.37
		5	-12.92	0.45	0.00	0.00	0.00	65.23
	309	4	13.27	8.13	0.00	0.00	0.00	-35.12
		5	-13.27	0.78	0.00	0.00	0.00	67.68
	310	4	14.11	7.53	0.00	0.00	0.00	-36.09
		5	-14.11	1.38	0.00	0.00	0.00	73.18
	311	4	14.77	6.93	0.00	0.00	0.00	-38.11
		5	-14.77	1.97	0.00	0.00	0.00	79.73
	312	4	15.25	6.36	0.00	0.00	0.00	-41.27
		5	-15.25	-1.35	0.00	0.00	0.00	87.51
	313	4	15.37	9.74	0.00	0.00	0.00	-39.48
		5	-15.37	-0.83	0.00	0.00	0.00	83.59
	314	4	15.40	9.14	0.00	0.00	0.00	-33.33
		5	-15.40	-0.23	0.00	0.00	0.00	81.96
	315	4	15.21	8.55	0.00	0.00	0.00	-28.46
		5	-15.21	0.36	0.00	0.00	0.00	81.62
	400	4	8.75	4.99	0.00	0.00	0.00	-24.55
		5	-8.75	0.02	0.00	0.00	0.00	54.34
	401	4	8.90	4.92	0.00	0.00	0.00	-25.94
		5	-8.90	0.09	0.00	0.00	0.00	54.94
	402	4	9.04	4.85	0.00	0.00	0.00	-27.41
		5	-9.04	0.15	0.00	0.00	0.00	55.61
	403	4	9.16	4.79	0.00	0.00	0.00	-28.99
		5	-9.16	0.22	0.00	0.00	0.00	56.39
	404	4	9.23	5.72	0.00	0.00	0.00	-28.17
		5	-9.23	0.27	0.00	0.00	0.00	57.02
	405	4	9.74	5.47	0.00	0.00	0.00	-30.70
		5	-9.74	0.51	0.00	0.00	0.00	59.54
	406	4	10.38	5.14	0.00	0.00	0.00	-35.41
		5	-10.38	0.84	0.00	0.00	0.00	63.21
	407	4	10.94	4.81	0.00	0.00	0.00	-40.62
		5	-10.94	1.17	0.00	0.00	0.00	67.38

MEMBER END FORCES STRUCTURE TYPE = SPACE

ALL UNITS ARE -- KIP FEET (LOCAL)

MEMBER	LOAD	JT	AXIAL	SHEAR-Y	SHEAR-Z	TORSION	MOM-Y	MOM-Z
408		4	11.25	8.46	0.00	0.00	0.00	-44.24
		5	-11.25	0.45	0.00	0.00	0.00	69.10
409		4	11.60	8.13	0.00	0.00	0.00	-38.99
		5	-11.60	0.78	0.00	0.00	0.00	71.55
410		4	12.44	7.53	0.00	0.00	0.00	-39.96
		5	-12.44	1.38	0.00	0.00	0.00	77.05
411		4	13.09	6.93	0.00	0.00	0.00	-41.98
		5	-13.09	1.97	0.00	0.00	0.00	83.60
412		4	13.58	6.36	0.00	0.00	0.00	-45.14
		5	-13.58	-1.35	0.00	0.00	0.00	91.38
413		4	13.69	9.74	0.00	0.00	0.00	-43.35
		5	-13.69	-0.83	0.00	0.00	0.00	87.46
414		4	13.73	9.14	0.00	0.00	0.00	-37.20
		5	-13.73	-0.23	0.00	0.00	0.00	85.83
415		4	13.53	8.55	0.00	0.00	0.00	-32.33
		5	-13.53	0.36	0.00	0.00	0.00	85.49
3000		4	10.54	4.94	0.00	0.00	0.00	-21.63
		5	-10.54	0.07	0.00	0.00	0.00	50.85
3001		4	11.02	4.73	0.00	0.00	0.00	-25.98
		5	-11.02	0.28	0.00	0.00	0.00	52.72
3002		4	11.95	4.32	0.00	0.00	0.00	-34.85
		5	-11.95	0.69	0.00	0.00	0.00	56.62
3003		4	12.77	3.91	0.00	0.00	0.00	-44.28
		5	-12.77	1.10	0.00	0.00	0.00	61.09
3004		4	13.39	6.60	0.00	0.00	0.00	-46.54
		5	-13.39	1.45	0.00	0.00	0.00	65.37
3005		4	13.86	9.30	0.00	0.00	0.00	-43.52
		5	-13.86	1.81	0.00	0.00	0.00	70.45
3006		4	14.28	8.89	0.00	0.00	0.00	-37.01
		5	-14.28	2.22	0.00	0.00	0.00	77.24
3007		4	14.53	8.47	0.00	0.00	0.00	-31.46
		5	-14.53	2.64	0.00	0.00	0.00	84.99
3008		4	14.61	8.05	0.00	0.00	0.00	-26.84
		5	-14.61	0.01	0.00	0.00	0.00	87.45
3009		4	14.53	7.64	0.00	0.00	0.00	-23.18
		5	-14.53	-2.63	0.00	0.00	0.00	84.77
4000		4	8.87	4.94	0.00	0.00	0.00	-25.50
		5	-8.87	0.07	0.00	0.00	0.00	54.72
4001		4	9.34	4.73	0.00	0.00	0.00	-29.85
		5	-9.34	0.28	0.00	0.00	0.00	56.59
4002		4	10.27	4.32	0.00	0.00	0.00	-38.72
		5	-10.27	0.69	0.00	0.00	0.00	60.49
4003		4	11.10	3.91	0.00	0.00	0.00	-48.15
		5	-11.10	1.10	0.00	0.00	0.00	64.96
4004		4	11.71	6.60	0.00	0.00	0.00	-50.41
		5	-11.71	1.45	0.00	0.00	0.00	69.24

MEMBER END FORCES STRUCTURE TYPE = SPACE

ALL UNITS ARE -- KIP FEET (LOCAL)

MEMBER	LOAD	JT	AXIAL	SHEAR-Y	SHEAR-Z	TORSION	MOM-Y	MOM-Z
	4005	4	12.18	9.30	0.00	0.00	0.00	-47.39
		5	-12.18	1.81	0.00	0.00	0.00	74.32
	4006	4	12.61	8.89	0.00	0.00	0.00	-40.88
		5	-12.61	2.22	0.00	0.00	0.00	81.11
	4007	4	12.86	8.47	0.00	0.00	0.00	-35.33
		5	-12.86	2.64	0.00	0.00	0.00	88.86
	4008	4	12.94	8.05	0.00	0.00	0.00	-30.71
		5	-12.94	0.01	0.00	0.00	0.00	91.32
	4009	4	12.85	7.64	0.00	0.00	0.00	-27.05
		5	-12.85	-2.63	0.00	0.00	0.00	88.64
5	300	6	10.42	5.03	0.00	0.00	0.00	-20.15
		5	-10.42	-0.02	0.00	0.00	0.00	50.47
	301	6	10.58	5.10	0.00	0.00	0.00	-19.95
		5	-10.58	-0.09	0.00	0.00	0.00	51.07
	302	6	10.71	5.16	0.00	0.00	0.00	-19.84
		5	-10.71	-0.15	0.00	0.00	0.00	51.74
	303	6	10.83	5.23	0.00	0.00	0.00	-19.82
		5	-10.83	-0.22	0.00	0.00	0.00	52.52
	304	6	10.90	5.28	0.00	0.00	0.00	-19.90
		5	-10.90	-0.27	0.00	0.00	0.00	53.15
	305	6	11.41	5.52	0.00	0.00	0.00	-19.50
		5	-11.41	-0.51	0.00	0.00	0.00	55.67
	306	6	12.05	5.85	0.00	0.00	0.00	-19.20
		5	-12.05	-0.84	0.00	0.00	0.00	59.34
	307	6	12.61	6.18	0.00	0.00	0.00	-19.39
		5	-12.61	-1.17	0.00	0.00	0.00	63.51
	308	6	12.92	6.43	0.00	0.00	0.00	-20.12
		5	-12.92	-0.45	0.00	0.00	0.00	65.23
	309	6	13.27	6.76	0.00	0.00	0.00	-21.50
		5	-13.27	-0.78	0.00	0.00	0.00	67.68
	310	6	14.11	7.36	0.00	0.00	0.00	-22.74
		5	-14.11	-1.38	0.00	0.00	0.00	73.18
	311	6	14.77	7.96	0.00	0.00	0.00	-25.06
		5	-14.77	-1.97	0.00	0.00	0.00	79.73
	312	6	15.25	7.56	0.00	0.00	0.00	-27.01
		5	-15.25	1.35	0.00	0.00	0.00	87.51
	313	6	15.37	8.07	0.00	0.00	0.00	-28.60
		5	-15.37	0.83	0.00	0.00	0.00	83.59
	314	6	15.40	8.67	0.00	0.00	0.00	-31.48
		5	-15.40	0.23	0.00	0.00	0.00	81.96
	315	6	15.21	9.27	0.00	0.00	0.00	-35.67
		5	-15.21	-0.36	0.00	0.00	0.00	81.62
	400	6	8.75	5.03	0.00	0.00	0.00	-24.02
		5	-8.75	-0.02	0.00	0.00	0.00	54.34

MEMBER END FORCES STRUCTURE TYPE = SPACE

ALL UNITS ARE -- KIP FEET (LOCAL)

MEMBER	LOAD	JT	AXIAL	SHEAR-Y	SHEAR-Z	TORSION	MOM-Y	MOM-Z
	401	6	8.90	5.10	0.00	0.00	0.00	-23.82
		5	-8.90	-0.09	0.00	0.00	0.00	54.94
	402	6	9.04	5.16	0.00	0.00	0.00	-23.71
		5	-9.04	-0.15	0.00	0.00	0.00	55.61
	403	6	9.16	5.23	0.00	0.00	0.00	-23.69
		5	-9.16	-0.22	0.00	0.00	0.00	56.39
	404	6	9.23	5.28	0.00	0.00	0.00	-23.77
		5	-9.23	-0.27	0.00	0.00	0.00	57.02
	405	6	9.74	5.52	0.00	0.00	0.00	-23.37
		5	-9.74	-0.51	0.00	0.00	0.00	59.54
	406	6	10.38	5.85	0.00	0.00	0.00	-23.07
		5	-10.38	-0.84	0.00	0.00	0.00	63.21
	407	6	10.94	6.18	0.00	0.00	0.00	-23.26
		5	-10.94	-1.17	0.00	0.00	0.00	67.38
	408	6	11.25	6.43	0.00	0.00	0.00	-23.99
		5	-11.25	-0.45	0.00	0.00	0.00	69.10
	409	6	11.60	6.76	0.00	0.00	0.00	-25.37
		5	-11.60	-0.78	0.00	0.00	0.00	71.55
	410	6	12.44	7.36	0.00	0.00	0.00	-26.61
		5	-12.44	-1.38	0.00	0.00	0.00	77.05
	411	6	13.09	7.96	0.00	0.00	0.00	-28.93
		5	-13.09	-1.97	0.00	0.00	0.00	83.60
	412	6	13.58	7.56	0.00	0.00	0.00	-30.88
		5	-13.58	1.35	0.00	0.00	0.00	91.38
	413	6	13.69	8.07	0.00	0.00	0.00	-32.47
		5	-13.69	0.83	0.00	0.00	0.00	87.46
	414	6	13.73	8.67	0.00	0.00	0.00	-35.35
		5	-13.73	0.23	0.00	0.00	0.00	85.83
	415	6	13.53	9.27	0.00	0.00	0.00	-39.54
		5	-13.53	-0.36	0.00	0.00	0.00	85.49
	3000	6	10.54	5.08	0.00	0.00	0.00	-19.97
		5	-10.54	-0.07	0.00	0.00	0.00	50.85
	3001	6	11.02	5.28	0.00	0.00	0.00	-19.36
		5	-11.02	-0.28	0.00	0.00	0.00	52.72
	3002	6	11.95	5.70	0.00	0.00	0.00	-18.29
		5	-11.95	-0.69	0.00	0.00	0.00	56.62
	3003	6	12.77	6.11	0.00	0.00	0.00	-17.79
		5	-12.77	-1.10	0.00	0.00	0.00	61.09
	3004	6	13.39	6.46	0.00	0.00	0.00	-17.87
		5	-13.39	-1.45	0.00	0.00	0.00	65.37
	3005	6	13.86	6.81	0.00	0.00	0.00	-18.73
		5	-13.86	-1.81	0.00	0.00	0.00	70.45
	3006	6	14.28	7.23	0.00	0.00	0.00	-20.52
		5	-14.28	-2.22	0.00	0.00	0.00	77.24
	3007	6	14.53	7.65	0.00	0.00	0.00	-23.27
		5	-14.53	-2.64	0.00	0.00	0.00	84.99

MEMBER END FORCES STRUCTURE TYPE = SPACE

ALL UNITS ARE -- KIP FEET (LOCAL)

MEMBER	LOAD	JT	AXIAL	SHEAR-Y	SHEAR-Z	TORSION	MOM-Y	MOM-Z
	3008	6	14.61	8.06	0.00	0.00	0.00	-26.95
		5	-14.61	-0.01	0.00	0.00	0.00	87.45
	3009	6	14.53	8.48	0.00	0.00	0.00	-31.59
		5	-14.53	2.63	0.00	0.00	0.00	84.77
	4000	6	8.87	5.08	0.00	0.00	0.00	-23.84
		5	-8.87	-0.07	0.00	0.00	0.00	54.72
	4001	6	9.34	5.28	0.00	0.00	0.00	-23.23
		5	-9.34	-0.28	0.00	0.00	0.00	56.59
	4002	6	10.27	5.70	0.00	0.00	0.00	-22.16
		5	-10.27	-0.69	0.00	0.00	0.00	60.49
	4003	6	11.10	6.11	0.00	0.00	0.00	-21.66
		5	-11.10	-1.10	0.00	0.00	0.00	64.96
	4004	6	11.71	6.46	0.00	0.00	0.00	-21.74
		5	-11.71	-1.45	0.00	0.00	0.00	69.24
	4005	6	12.18	6.81	0.00	0.00	0.00	-22.60
		5	-12.18	-1.81	0.00	0.00	0.00	74.32
	4006	6	12.61	7.23	0.00	0.00	0.00	-24.39
		5	-12.61	-2.22	0.00	0.00	0.00	81.11
	4007	6	12.86	7.65	0.00	0.00	0.00	-27.14
		5	-12.86	-2.64	0.00	0.00	0.00	88.86
	4008	6	12.94	8.06	0.00	0.00	0.00	-30.82
		5	-12.94	-0.01	0.00	0.00	0.00	91.32
	4009	6	12.85	8.48	0.00	0.00	0.00	-35.46
		5	-12.85	2.63	0.00	0.00	0.00	88.64
6	300	7	11.47	7.72	0.00	0.00	0.00	30.98
		6	-10.97	-3.70	0.00	0.00	0.00	20.15
	301	7	11.63	7.76	0.00	0.00	0.00	31.59
		6	-11.13	-3.75	0.00	0.00	0.00	19.95
	302	7	11.77	7.81	0.00	0.00	0.00	32.15
		6	-11.27	-3.79	0.00	0.00	0.00	19.84
	303	7	11.90	7.86	0.00	0.00	0.00	32.62
		6	-11.40	-3.85	0.00	0.00	0.00	19.82
	304	7	11.98	7.90	0.00	0.00	0.00	32.88
		6	-11.47	-3.88	0.00	0.00	0.00	19.90
	305	7	12.51	8.08	0.00	0.00	0.00	34.89
		6	-12.00	-4.06	0.00	0.00	0.00	19.50
	306	7	13.19	8.33	0.00	0.00	0.00	37.44
		6	-12.68	-4.31	0.00	0.00	0.00	19.20
	307	7	13.78	8.59	0.00	0.00	0.00	39.58
		6	-13.28	-4.57	0.00	0.00	0.00	19.39
	308	7	14.12	8.80	0.00	0.00	0.00	40.74
		6	-13.62	-4.78	0.00	0.00	0.00	20.12
	309	7	14.51	9.08	0.00	0.00	0.00	41.95
		6	-14.01	-5.06	0.00	0.00	0.00	21.50

MEMBER END FORCES STRUCTURE TYPE = SPACE

ALL UNITS ARE -- KIP FEET (LOCAL)

MEMBER	LOAD	JT	AXIAL	SHEAR-Y	SHEAR-Z	TORSION	MOM-Y	MOM-Z
	310	7	15.42	9.57	0.00	0.00	0.00	45.12
		6	-14.92	-5.55	0.00	0.00	0.00	22.74
	311	7	16.14	10.08	0.00	0.00	0.00	47.43
		6	-15.64	-6.07	0.00	0.00	0.00	25.06
	312	7	16.69	10.59	0.00	0.00	0.00	49.03
		6	-16.07	-5.61	0.00	0.00	0.00	27.01
	313	7	16.87	11.09	0.00	0.00	0.00	49.02
		6	-16.25	-6.11	0.00	0.00	0.00	28.60
	314	7	16.98	11.68	0.00	0.00	0.00	48.57
		6	-16.36	-6.70	0.00	0.00	0.00	31.48
	315	7	16.74	11.33	0.00	0.00	0.00	48.09
		6	-16.24	-7.31	0.00	0.00	0.00	35.67
	400	7	9.81	7.93	0.00	0.00	0.00	28.98
		6	-9.31	-3.91	0.00	0.00	0.00	24.02
	401	7	9.97	7.97	0.00	0.00	0.00	29.60
		6	-9.47	-3.95	0.00	0.00	0.00	23.82
	402	7	10.11	8.02	0.00	0.00	0.00	30.15
		6	-9.61	-4.00	0.00	0.00	0.00	23.71
	403	7	10.24	8.07	0.00	0.00	0.00	30.62
		6	-9.74	-4.05	0.00	0.00	0.00	23.69
	404	7	10.31	8.11	0.00	0.00	0.00	30.88
		6	-9.81	-4.09	0.00	0.00	0.00	23.77
	405	7	10.85	8.29	0.00	0.00	0.00	32.89
		6	-10.34	-4.27	0.00	0.00	0.00	23.37
	406	7	11.53	8.54	0.00	0.00	0.00	35.44
		6	-11.02	-4.52	0.00	0.00	0.00	23.07
	407	7	12.12	8.79	0.00	0.00	0.00	37.59
		6	-11.62	-4.78	0.00	0.00	0.00	23.26
	408	7	12.46	9.00	0.00	0.00	0.00	38.75
		6	-11.96	-4.98	0.00	0.00	0.00	23.99
	409	7	12.85	9.29	0.00	0.00	0.00	39.96
		6	-12.35	-5.27	0.00	0.00	0.00	25.37
	410	7	13.76	9.78	0.00	0.00	0.00	43.13
		6	-13.26	-5.76	0.00	0.00	0.00	26.61
	411	7	14.48	10.29	0.00	0.00	0.00	45.44
		6	-13.98	-6.27	0.00	0.00	0.00	28.93
	412	7	15.03	10.80	0.00	0.00	0.00	47.03
		6	-14.41	-5.82	0.00	0.00	0.00	30.88
	413	7	15.21	11.30	0.00	0.00	0.00	47.03
		6	-14.59	-6.31	0.00	0.00	0.00	32.47
	414	7	15.32	11.89	0.00	0.00	0.00	46.58
		6	-14.70	-6.90	0.00	0.00	0.00	35.35
	415	7	15.08	11.54	0.00	0.00	0.00	46.09
		6	-14.58	-7.52	0.00	0.00	0.00	39.54
	3000	7	11.59	7.75	0.00	0.00	0.00	31.45
		6	-11.09	-3.73	0.00	0.00	0.00	19.97

MEMBER END FORCES STRUCTURE TYPE = SPACE

ALL UNITS ARE -- KIP FEET (LOCAL)

MEMBER	LOAD	JT	AXIAL	SHEAR-Y	SHEAR-Z	TORSION	MOM-Y	MOM-Z
	3001	7	12.09	7.90	0.00	0.00	0.00	33.38
		6	-11.59	-3.88	0.00	0.00	0.00	19.36
	3002	7	13.06	8.19	0.00	0.00	0.00	37.12
		6	-12.56	-4.17	0.00	0.00	0.00	18.29
	3003	7	13.94	8.50	0.00	0.00	0.00	40.39
		6	-13.43	-4.48	0.00	0.00	0.00	17.79
	3004	7	14.59	8.77	0.00	0.00	0.00	42.77
		6	-14.08	-4.75	0.00	0.00	0.00	17.87
	3005	7	15.10	9.06	0.00	0.00	0.00	44.53
		6	-14.60	-5.04	0.00	0.00	0.00	18.73
	3006	7	15.57	9.42	0.00	0.00	0.00	45.99
		6	-15.07	-5.40	0.00	0.00	0.00	20.52
	3007	7	15.87	9.80	0.00	0.00	0.00	46.70
		6	-15.37	-5.79	0.00	0.00	0.00	23.27
	3008	7	16.00	10.21	0.00	0.00	0.00	46.66
		6	-15.50	-6.19	0.00	0.00	0.00	26.95
	3009	7	15.97	10.63	0.00	0.00	0.00	45.85
		6	-15.47	-6.61	0.00	0.00	0.00	31.59
	4000	7	9.93	7.96	0.00	0.00	0.00	29.46
		6	-9.43	-3.94	0.00	0.00	0.00	23.84
	4001	7	10.43	8.10	0.00	0.00	0.00	31.38
		6	-9.93	-4.09	0.00	0.00	0.00	23.23
	4002	7	11.40	8.40	0.00	0.00	0.00	35.12
		6	-10.90	-4.38	0.00	0.00	0.00	22.16
	4003	7	12.28	8.71	0.00	0.00	0.00	38.39
		6	-11.77	-4.69	0.00	0.00	0.00	21.66
	4004	7	12.93	8.98	0.00	0.00	0.00	40.78
		6	-12.42	-4.96	0.00	0.00	0.00	21.74
	4005	7	13.44	9.27	0.00	0.00	0.00	42.53
		6	-12.94	-5.25	0.00	0.00	0.00	22.60
	4006	7	13.91	9.63	0.00	0.00	0.00	44.00
		6	-13.41	-5.61	0.00	0.00	0.00	24.39
	4007	7	14.21	10.01	0.00	0.00	0.00	44.71
		6	-13.71	-5.99	0.00	0.00	0.00	27.14
	4008	7	14.34	10.41	0.00	0.00	0.00	44.66
		6	-13.84	-6.40	0.00	0.00	0.00	30.82
	4009	7	14.31	10.84	0.00	0.00	0.00	43.85
		6	-13.81	-6.82	0.00	0.00	0.00	35.46

********** END OF LATEST ANALYSIS RESULT **********

```
471. ***
472. LOAD LIST 100 TO 115 200 TO 215 1000 TO 1009 2000 TO 2009
473. PRINT FORCE ENVELOPE NSECTION 4 LIST 3 6
```

MEMBER FORCE ENVELOPE

ALL UNITS ARE KIP FEET

MEMB	DISTANCE		FY	LD	MZ	LD	FZ	LD	MY	LD
3	0.00	MAX	21.16	210	74.43	114	0.00	2009	0.00	2009
		MIN	11.60	104	35.51	2000	0.00	2009	0.00	2009
	0.75	MAX	20.67	210	62.43	115	0.00	2009	0.00	2009
		MIN	9.85	1000	26.38	205	0.00	2009	0.00	2009
	1.50	MAX	20.19	210	51.25	115	0.00	2009	0.00	2009
		MIN	9.37	1000	13.09	2002	0.00	2009	0.00	2009
	2.26	MAX	18.54	211	40.42	115	0.00	2009	0.00	2009
		MIN	8.89	1000	0.40	2002	0.00	2009	0.00	2009
	3.01	MAX	18.07	211	30.57	1009	0.00	2009	0.00	2009
		MIN	7.96	1001	-9.30	2002	0.00	2009	0.00	2009
	3.76	MAX	17.61	211	21.53	1009	0.00	2009	0.00	2009
		MIN	7.50	1001	-18.65	2002	0.00	2009	0.00	2009
	4.51	MAX	17.15	211	12.84	1009	0.00	2009	0.00	2009
		MIN	7.04	1001	-29.75	2003	0.00	2009	0.00	2009
	5.27	MAX	15.59	212	4.49	1009	0.00	2009	0.00	2009
		MIN	6.58	1001	-40.31	2003	0.00	2009	0.00	2009
	6.02	MAX	15.14	212	-3.51	1009	0.00	2009	0.00	2009
		MIN	5.21	1002	-47.96	2003	0.00	2009	0.00	2009
	6.77	MAX	14.69	212	-11.18	1009	0.00	2009	0.00	2009
		MIN	4.77	1002	-55.27	2003	0.00	2009	0.00	2009
	7.52	MAX	14.25	212	-18.52	1009	0.00	2009	0.00	2009
		MIN	4.33	1002	-64.65	2004	0.00	2009	0.00	2009
	8.28	MAX	12.90	213	-23.95	100	0.00	2009	0.00	2009
		MIN	3.90	1002	-73.26	2004	0.00	2009	0.00	2009
	9.03	MAX	12.47	213	-27.84	100	0.00	2009	0.00	2009
		MIN	2.57	1003	-79.03	2004	0.00	2009	0.00	2009

MAX/MIN FORCE VALUES FOR MEMB 3, AMONGST ALL SECT LOCATIONS

	FY/ FZ	DIST DIST	LD LD	MZ/ MY	DIST DIST	LD LD	FX	DIST	LD
MAX.	21.16	0.00	210	74.43	0.00	114			
	0.00	0.00	100	0.00	0.00	100	25.61 C	0.00	113
MIN.	2.57	9.03	1003	-79.03	9.03	2004			
	0.00	9.03	2009	0.00	9.03	2009	12.70 C	9.03	200

6	0.00	MAX	17.78	214	74.34	112	0.00	2009	0.00	2009
		MIN	10.52	100	39.77	200	0.00	2009	0.00	2009
	0.75	MAX	17.30	214	62.82	112	0.00	2009	0.00	2009
		MIN	10.03	100	31.80	200	0.00	2009	0.00	2009

1.50	MAX	16.82	214	51.67	112	0.00	2009	0.00	2009
	MIN	9.55	100	24.18	200	0.00	2009	0.00	2009
2.26	MAX	15.73	215	40.87	112	0.00	2009	0.00	2009
	MIN	9.08	100	16.93	200	0.00	2009	0.00	2009
3.01	MAX	15.26	215	31.30	1006	0.00	2009	0.00	2009
	MIN	8.61	100	10.03	200	0.00	2009	0.00	2009
3.76	MAX	14.80	215	22.75	1006	0.00	2009	0.00	2009
	MIN	8.14	100	3.48	200	0.00	2009	0.00	2009
4.51	MAX	14.34	215	14.84	1005	0.00	2009	0.00	2009
	MIN	7.69	100	-2.72	200	0.00	2009	0.00	2009
5.27	MAX	13.88	215	7.46	1005	0.00	2009	0.00	2009
	MIN	7.23	100	-11.95	215	0.00	2009	0.00	2009
6.02	MAX	13.43	215	0.42	1005	0.00	2009	0.00	2009
	MIN	6.78	100	-22.23	215	0.00	2009	0.00	2009
6.77	MAX	12.99	215	-5.92	1004	0.00	2009	0.00	2009
	MIN	6.34	100	-32.17	215	0.00	2009	0.00	2009
7.52	MAX	12.55	215	-11.91	1004	0.00	2009	0.00	2009
	MIN	5.90	100	-41.77	215	0.00	2009	0.00	2009
8.28	MAX	12.11	215	-17.57	1004	0.00	2009	0.00	2009
	MIN	5.46	100	-51.05	215	0.00	2009	0.00	2009
9.03	MAX	11.69	215	-22.78	1003	0.00	2009	0.00	2009
	MIN	5.03	100	-60.01	215	0.00	2009	0.00	2009

MAX/MIN FORCE VALUES FOR MEMB 6, AMONGST ALL SECT LOCATIONS

	FY/ FZ	DIST DIST	LD LD	MZ/ MY	DIST DIST	LD LD	FX	DIST	LD
MAX.	17.78	0.00	214	74.34	0.00	112			
	0.00	0.00	100	0.00	0.00	100	25.65 C	0.00	114
MIN.	5.03	9.03	100	-60.01	9.03	215			
	0.00	9.03	2009	0.00	9.03	2009	12.71 C	9.03	200

********** END OF FORCE ENVELOPE FROM INTERNAL STORAGE **********

474. LOAD LIST 100 TO 115 200 TO 215 1000 TO 1009 2000 TO 2009
475. PRINT FORCE ENVELOPE NSECTION 4 LIST 4 5

MEMBER FORCE ENVELOPE

ALL UNITS ARE KIP FEET

MEMB	DISTANCE		FY	LD	MZ	LD	FZ	LD	MY	LD
4	0.00	MAX	15.14	213	-27.84	100	0.00	2009	0.00	2009
		MIN	4.93	2003	-79.03	2004	0.00	2009	0.00	2009
	1.00	MAX	14.57	213	-34.37	100	0.00	2009	0.00	2009
		MIN	4.35	2003	-88.39	2004	0.00	2009	0.00	2009
	2.00	MAX	12.95	214	-40.33	100	0.00	2009	0.00	2009
		MIN	3.78	2003	-97.18	2004	0.00	2009	0.00	2009
	3.00	MAX	12.38	214	-45.72	100	0.00	2009	0.00	2009
		MIN	2.60	2004	-103.82	2005	0.00	2009	0.00	2009
	4.00	MAX	11.81	214	-50.54	100	0.00	2009	0.00	2009
		MIN	2.03	2004	-112.35	2006	0.00	2009	0.00	2009
	5.00	MAX	10.19	215	-54.79	100	0.00	2009	0.00	2009
		MIN	1.46	2004	-118.30	2006	0.00	2009	0.00	2009
	6.00	MAX	9.62	215	-58.46	100	0.00	2009	0.00	2009
		MIN	0.27	2005	-123.46	2006	0.00	2009	0.00	2009
	7.00	MAX	9.05	215	-61.57	100	0.00	2009	0.00	2009
		MIN	-0.30	2005	-129.02	2007	0.00	2009	0.00	2009
	8.00	MAX	7.61	2008	-64.10	100	0.00	2009	0.00	2009
		MIN	-0.87	2005	-132.53	2007	0.00	2009	0.00	2009
	9.00	MAX	7.04	2008	-66.06	100	0.00	2009	0.00	2009
		MIN	-2.17	2006	-135.25	2007	0.00	2009	0.00	2009
	10.00	MAX	6.47	2008	-67.45	100	0.00	2009	0.00	2009
		MIN	-2.75	2006	-137.83	2008	0.00	2009	0.00	2009
	11.00	MAX	5.17	2009	-68.27	100	0.00	2009	0.00	2009
		MIN	-3.32	2006	-138.97	2007	0.00	2009	0.00	2009
	12.00	MAX	4.60	2009	-68.52	100	0.00	2009	0.00	2009
		MIN	-4.62	2007	-139.28	212	0.00	2009	0.00	2009

MAX/MIN FORCE VALUES FOR MEMB 4, AMONGST ALL SECT LOCATIONS

	FY/ FZ	DIST DIST	LD LD	MZ/ MY	DIST DIST	LD LD	FX	DIST	LD
MAX.	15.14	0.00	113	-27.84	0.00	100			
	0.00	0.00	100	0.00	0.00	100	23.28 C	0.00	114
MIN.	-4.62	12.00	2007	-139.28	12.00	212			
	0.00	12.00	2009	0.00	12.00	2009	11.95 C	12.00	200

5	0.00	MAX	14.32	215	-22.78	1003	0.00	2009	0.00	2009
		MIN	6.90	200	-60.01	215	0.00	2009	0.00	2009
	1.00	MAX	13.74	215	-31.28	1003	0.00	2009	0.00	2009
		MIN	6.32	200	-74.04	215	0.00	2009	0.00	2009

2.00	MAX	13.17	215	-38.63	1002	0.00	2009	0.00	2009
	MIN	5.75	200	-87.50	215	0.00	2009	0.00	2009
3.00	MAX	11.56	214	-44.95	1000	0.00	2009	0.00	2009
	MIN	5.18	200	-100.11	215	0.00	2009	0.00	2009
4.00	MAX	10.99	214	-49.92	100	0.00	2009	0.00	2009
	MIN	4.61	200	-105.60	215	0.00	2009	0.00	2009
5.00	MAX	10.41	214	-54.24	100	0.00	2009	0.00	2009
	MIN	4.04	200	-111.88	214	0.00	2009	0.00	2009
6.00	MAX	9.50	2009	-58.00	100	0.00	2009	0.00	2009
	MIN	3.02	214	-121.73	214	0.00	2009	0.00	2009
7.00	MAX	8.22	213	-61.18	100	0.00	2009	0.00	2009
	MIN	2.45	214	-129.18	2009	0.00	2009	0.00	2009
8.00	MAX	7.65	213	-63.79	100	0.00	2009	0.00	2009
	MIN	1.87	214	-132.49	2009	0.00	2009	0.00	2009
9.00	MAX	7.06	2008	-65.83	100	0.00	2009	0.00	2009
	MIN	0.26	213	-135.23	2009	0.00	2009	0.00	2009
10.00	MAX	5.76	2007	-67.30	100	0.00	2009	0.00	2009
	MIN	-0.32	213	-138.01	2008	0.00	2009	0.00	2009
11.00	MAX	5.19	2007	-68.19	100	0.00	2009	0.00	2009
	MIN	-4.03	2009	-138.87	2008	0.00	2009	0.00	2009
12.00	MAX	4.62	2007	-68.52	100	0.00	2009	0.00	2009
	MIN	-4.60	2009	-139.28	212	0.00	2009	0.00	2009

MAX/MIN FORCE VALUES FOR MEMB 5, AMONGST ALL SECT LOCATIONS

	FY/ FZ	DIST DIST	LD LD	MZ/ MY	DIST DIST	LD LD	FX	DIST	LD
MAX.	14.32	0.00	115	-22.78	0.00	1003			
	0.00	0.00	100	0.00	0.00	100	23.28 C	0.00	114
MIN.	-4.60	12.00	2009	-139.28	12.00	212			
	0.00	12.00	2009	0.00	12.00	2009	11.95 C	12.00	200

********** END OF FORCE ENVELOPE FROM INTERNAL STORAGE **********

476. LOAD LIST 100 TO 115 200 TO 215 1000 TO 1009 2000 TO 2009
477. PRINT FORCE ENVELOPE NSECTION 4 LIST 1 2

MEMBER FORCE ENVELOPE

ALL UNITS ARE KIP FEET

MEMB	DISTANCE		FY	LD	MZ	LD	FZ	LD	MY	LD
1	0.00	MAX	-7.12	1000	0.00	2009	0.00	2009	0.00	2009
		MIN	-16.79	214	0.00	2009	0.00	2009	0.00	2009
	0.38	MAX	-7.57	1000	6.44	214	0.00	2009	0.00	2009
		MIN	-16.80	214	2.82	1000	0.00	2009	0.00	2009
	0.77	MAX	-8.01	1000	12.89	214	0.00	2009	0.00	2009
		MIN	-16.82	214	5.81	1000	0.00	2009	0.00	2009
	1.15	MAX	-8.44	1000	19.35	214	0.00	2009	0.00	2009
		MIN	-16.84	214	8.97	1000	0.00	2009	0.00	2009
	1.53	MAX	-8.80	2000	25.82	214	0.00	2009	0.00	2009
		MIN	-16.92	114	12.29	1000	0.00	2009	0.00	2009
	1.92	MAX	-8.83	2000	32.29	214	0.00	2009	0.00	2009
		MIN	-17.32	114	15.77	1000	0.00	2009	0.00	2009
	2.30	MAX	-8.86	2000	38.77	214	0.00	2009	0.00	2009
		MIN	-17.71	114	19.39	1000	0.00	2009	0.00	2009
	2.69	MAX	-8.89	2000	45.27	214	0.00	2009	0.00	2009
		MIN	-18.09	114	23.17	1000	0.00	2009	0.00	2009
	3.07	MAX	-8.93	2000	51.84	114	0.00	2009	0.00	2009
		MIN	-18.45	114	27.04	2000	0.00	2009	0.00	2009
	3.45	MAX	-8.97	2000	58.98	114	0.00	2009	0.00	2009
		MIN	-18.80	114	30.47	2000	0.00	2009	0.00	2009
	3.84	MAX	-9.02	2000	66.26	114	0.00	2009	0.00	2009
		MIN	-19.14	114	33.92	2000	0.00	2009	0.00	2009
	4.22	MAX	-9.07	2000	73.67	114	0.00	2009	0.00	2009
		MIN	-19.47	114	37.39	2000	0.00	2009	0.00	2009
	4.60	MAX	-9.12	2000	81.20	114	0.00	2009	0.00	2009
		MIN	-19.78	114	40.88	2000	0.00	2009	0.00	2009

MAX/MIN FORCE VALUES FOR MEMB 1, AMONGST ALL SECT LOCATIONS

	FY/ FZ	DIST DIST	LD LD	MZ/ MY	DIST DIST	LD LD	FX	DIST	LD
MAX.	-7.12	0.00	1000	81.20	4.60	114			
	0.00	0.00	100	0.00	0.00	100	27.87 C	0.00	210
MIN.	-19.78	4.60	114	0.00	0.00	2009			
	0.00	4.60	2009	0.00	4.60	2009	15.52 C	4.60	204

2	0.00	MAX	-7.76	100	0.00	2009	0.00	2009	0.00	2009
		MIN	-16.76	213	0.00	2009	0.00	2009	0.00	2009
	0.38	MAX	-8.21	100	6.43	213	0.00	2009	0.00	2009
		MIN	-16.77	213	3.06	100	0.00	2009	0.00	2009

0.77	MAX	-8.66	100	12.87	213	0.00	2009	0.00	2009
	MIN	-16.79	213	6.30	100	0.00	2009	0.00	2009
1.15	MAX	-9.08	100	19.32	213	0.00	2009	0.00	2009
	MIN	-16.81	213	9.71	100	0.00	2009	0.00	2009
1.53	MAX	-9.44	200	25.77	213	0.00	2009	0.00	2009
	MIN	-16.89	113	13.27	100	0.00	2009	0.00	2009
1.92	MAX	-9.47	200	32.23	213	0.00	2009	0.00	2009
	MIN	-17.29	113	16.99	100	0.00	2009	0.00	2009
2.30	MAX	-9.50	200	38.70	213	0.00	2009	0.00	2009
	MIN	-17.68	113	20.87	100	0.00	2009	0.00	2009
2.69	MAX	-9.53	200	45.19	213	0.00	2009	0.00	2009
	MIN	-18.06	113	24.89	100	0.00	2009	0.00	2009
3.07	MAX	-9.57	200	51.74	113	0.00	2009	0.00	2009
	MIN	-18.42	113	29.01	200	0.00	2009	0.00	2009
3.45	MAX	-9.61	200	58.88	113	0.00	2009	0.00	2009
	MIN	-18.77	113	32.69	200	0.00	2009	0.00	2009
3.84	MAX	-9.66	200	66.15	113	0.00	2009	0.00	2009
	MIN	-19.11	113	36.38	200	0.00	2009	0.00	2009
4.22	MAX	-9.71	200	73.54	113	0.00	2009	0.00	2009
	MIN	-19.44	113	40.10	200	0.00	2009	0.00	2009
4.60	MAX	-9.76	200	81.06	113	0.00	2009	0.00	2009
	MIN	-19.75	113	43.83	200	0.00	2009	0.00	2009

MAX/MIN FORCE VALUES FOR MEMB 2, AMONGST ALL SECT LOCATIONS

	FY/ FZ	DIST DIST	LD LD	MZ/ MY	DIST DIST	LD LD	FX	DIST	LD
MAX.	-7.76	0.00	100	81.06	4.60	113			
	0.00	0.00	100	0.00	0.00	100	25.16 C	0.00	214
MIN.	-19.75	4.60	113	0.00	0.00	2009			
	0.00	4.60	2009	0.00	4.60	2009	14.20 C	4.60	200

********** END OF FORCE ENVELOPE FROM INTERNAL STORAGE **********

478. LOAD LIST 300 TO 315 400 TO 415 3000 TO 3009 4000 TO 4009
479. PRINT FORCE ENVELOPE NSECTION 4 LIST 3 6

MEMBER FORCE ENVELOPE

ALL UNITS ARE KIP FEET

MEMB	DISTANCE		FY	LD	MZ	LD	FZ	LD	MY	LD
3	0.00	MAX	13.82	410	49.08	314	0.00	4009	0.00	4009
		MIN	8.34	304	26.55	4000	0.00	4009	0.00	4009
	0.75	MAX	13.46	410	40.96	315	0.00	4009	0.00	4009
		MIN	7.26	3000	20.06	405	0.00	4009	0.00	4009
	1.50	MAX	13.11	410	33.38	315	0.00	4009	0.00	4009
		MIN	6.90	3000	11.25	4002	0.00	4009	0.00	4009
	2.26	MAX	12.09	411	26.05	315	0.00	4009	0.00	4009
		MIN	6.56	3000	2.85	4002	0.00	4009	0.00	4009
	3.01	MAX	11.74	411	19.34	3009	0.00	4009	0.00	4009
		MIN	5.95	3001	-3.79	4002	0.00	4009	0.00	4009
	3.76	MAX	11.40	411	13.15	3009	0.00	4009	0.00	4009
		MIN	5.61	3001	-10.18	4002	0.00	4009	0.00	4009
	4.51	MAX	11.07	411	7.22	3009	0.00	4009	0.00	4009
		MIN	5.27	3001	-17.50	4003	0.00	4009	0.00	4009
	5.27	MAX	10.10	412	1.54	3009	0.00	4009	0.00	4009
		MIN	4.94	3001	-24.46	4003	0.00	4009	0.00	4009
	6.02	MAX	9.77	412	-3.89	3009	0.00	4009	0.00	4009
		MIN	4.08	3002	-29.70	4003	0.00	4009	0.00	4009
	6.77	MAX	9.45	412	-9.07	3009	0.00	4009	0.00	4009
		MIN	3.76	3002	-34.70	4003	0.00	4009	0.00	4009
	7.52	MAX	9.13	412	-14.02	3009	0.00	4009	0.00	4009
		MIN	3.43	3002	-40.82	4004	0.00	4009	0.00	4009
	8.28	MAX	8.28	413	-17.81	300	0.00	4009	0.00	4009
		MIN	3.12	3002	-46.46	4004	0.00	4009	0.00	4009
	9.03	MAX	7.97	413	-20.68	300	0.00	4009	0.00	4009
		MIN	2.29	3003	-50.41	4004	0.00	4009	0.00	4009

MAX/MIN FORCE VALUES FOR MEMB 3, AMONGST ALL SECT LOCATIONS

	FY/ FZ	DIST DIST	LD LD	MZ/ MY	DIST DIST	LD LD	FX	DIST	LD
MAX.	13.82	0.00	410	49.08	0.00	314			
	0.00	0.00	300	0.00	0.00	300	16.96 C	0.00	313
MIN.	2.29	9.03	3003	-50.41	9.03	4004			
	0.00	9.03	4009	0.00	9.03	4009	9.30 C	9.03	400

6	0.00	MAX	11.89	414	49.03	312	0.00	4009	0.00	4009
		MIN	7.72	300	28.98	400	0.00	4009	0.00	4009
	0.75	MAX	11.53	414	41.19	312	0.00	4009	0.00	4009
		MIN	7.36	300	23.15	400	0.00	4009	0.00	4009

1.50	MAX	11.18	414	33.62	312	0.00	4009	0.00	4009
	MIN	7.01	300	17.59	400	0.00	4009	0.00	4009
2.26	MAX	10.48	415	26.31	312	0.00	4009	0.00	4009
	MIN	6.66	300	12.29	400	0.00	4009	0.00	4009
3.01	MAX	10.14	415	19.76	3006	0.00	4009	0.00	4009
	MIN	6.32	300	7.25	400	0.00	4009	0.00	4009
3.76	MAX	9.80	415	13.85	3006	0.00	4009	0.00	4009
	MIN	5.98	300	2.47	400	0.00	4009	0.00	4009
4.51	MAX	9.46	415	8.36	3005	0.00	4009	0.00	4009
	MIN	5.64	300	-2.05	400	0.00	4009	0.00	4009
5.27	MAX	9.13	415	3.23	3005	0.00	4009	0.00	4009
	MIN	5.31	300	-8.26	415	0.00	4009	0.00	4009
6.02	MAX	8.80	415	-1.65	3005	0.00	4009	0.00	4009
	MIN	4.98	300	-15.00	415	0.00	4009	0.00	4009
6.77	MAX	8.47	415	-6.07	3004	0.00	4009	0.00	4009
	MIN	4.65	300	-21.50	415	0.00	4009	0.00	4009
7.52	MAX	8.15	415	-10.24	3004	0.00	4009	0.00	4009
	MIN	4.33	300	-27.75	415	0.00	4009	0.00	4009
8.28	MAX	7.83	415	-14.17	3004	0.00	4009	0.00	4009
	MIN	4.01	300	-33.77	415	0.00	4009	0.00	4009
9.03	MAX	7.52	415	-17.79	3003	0.00	4009	0.00	4009
	MIN	3.70	300	-39.54	415	0.00	4009	0.00	4009

MAX/MIN FORCE VALUES FOR MEMB 6, AMONGST ALL SECT LOCATIONS

	FY/ FZ	DIST DIST	LD LD	MZ/ MY	DIST DIST	LD LD	FX	DIST	LD
MAX.	11.89	0.00	414	49.03	0.00	312			
	0.00	0.00	300	0.00	0.00	300	16.98 C	0.00	314
MIN.	3.70	9.03	300	-39.54	9.03	415			
	0.00	9.03	4009	0.00	9.03	4009	9.31 C	9.03	400

********** END OF FORCE ENVELOPE FROM INTERNAL STORAGE **********

```
480. LOAD LIST 300 TO 315 400 TO 415 3000 TO 3009 4000 TO 4009
481. PRINT FORCE ENVELOPE NSECTION 4 LIST 4 5
```

MEMBER FORCE ENVELOPE

ALL UNITS ARE KIP FEET

MEMB	DISTANCE		FY	LD	MZ	LD	FZ	LD	MY	LD
4	0.00	MAX	9.74	413	-20.68	300	0.00	4009	0.00	4009
		MIN	3.91	4003	-50.41	4004	0.00	4009	0.00	4009
	1.00	MAX	9.33	413	-25.46	300	0.00	4009	0.00	4009
		MIN	3.49	4003	-56.81	4004	0.00	4009	0.00	4009
	2.00	MAX	8.31	414	-29.82	300	0.00	4009	0.00	4009
		MIN	3.07	4003	-62.79	4004	0.00	4009	0.00	4009
	3.00	MAX	7.89	414	-33.76	300	0.00	4009	0.00	4009
		MIN	2.30	4004	-67.44	4005	0.00	4009	0.00	4009
	4.00	MAX	7.47	414	-37.29	300	0.00	4009	0.00	4009
		MIN	1.89	4004	-73.09	4006	0.00	4009	0.00	4009
	5.00	MAX	6.46	415	-40.40	300	0.00	4009	0.00	4009
		MIN	1.47	4004	-77.17	4006	0.00	4009	0.00	4009
	6.00	MAX	6.04	415	-43.09	300	0.00	4009	0.00	4009
		MIN	0.70	4005	-80.71	4006	0.00	4009	0.00	4009
	7.00	MAX	5.62	415	-45.36	300	0.00	4009	0.00	4009
		MIN	0.28	4005	-84.39	4007	0.00	4009	0.00	4009
	8.00	MAX	4.71	4008	-47.22	300	0.00	4009	0.00	4009
		MIN	-0.14	4005	-86.80	4007	0.00	4009	0.00	4009
	9.00	MAX	4.30	4008	-48.66	300	0.00	4009	0.00	4009
		MIN	-0.97	4006	-88.67	4007	0.00	4009	0.00	4009
	10.00	MAX	3.88	4008	-49.68	300	0.00	4009	0.00	4009
		MIN	-1.39	4006	-90.38	4008	0.00	4009	0.00	4009
	11.00	MAX	3.05	4009	-50.28	300	0.00	4009	0.00	4009
		MIN	-1.80	4006	-91.16	4007	0.00	4009	0.00	4009
	12.00	MAX	2.63	4009	-50.47	300	0.00	4009	0.00	4009
		MIN	-2.64	4007	-91.38	412	0.00	4009	0.00	4009

MAX/MIN FORCE VALUES FOR MEMB 4, AMONGST ALL SECT LOCATIONS

	FY/ FZ	DIST DIST	LD LD	MZ/ MY	DIST DIST	LD LD	FX	DIST	LD
MAX.	9.74	0.00	313	-20.68	0.00	300			
	0.00	0.00	300	0.00	0.00	300	15.40 C	0.00	314
MIN.	-2.64	12.00	4007	-91.38	12.00	412			
	0.00	12.00	4009	0.00	12.00	4009	8.75 C	12.00	400

5	0.00	MAX	9.27	415	-17.79	3003	0.00	4009	0.00	4009
		MIN	5.03	400	-39.54	415	0.00	4009	0.00	4009
	1.00	MAX	8.85	415	-23.70	3003	0.00	4009	0.00	4009
		MIN	4.61	400	-48.61	415	0.00	4009	0.00	4009

2.00	MAX	8.44	415	-28.85	3002	0.00	4009	0.00	4009
	MIN	4.20	400	-57.25	415	0.00	4009	0.00	4009
3.00	MAX	7.42	414	-33.32	3000	0.00	4009	0.00	4009
	MIN	3.78	400	-65.32	415	0.00	4009	0.00	4009
4.00	MAX	7.00	414	-36.93	300	0.00	4009	0.00	4009
	MIN	3.36	400	-69.23	415	0.00	4009	0.00	4009
5.00	MAX	6.59	414	-40.09	300	0.00	4009	0.00	4009
	MIN	2.94	400	-73.50	414	0.00	4009	0.00	4009
6.00	MAX	5.98	4009	-42.82	300	0.00	4009	0.00	4009
	MIN	2.27	414	-79.72	414	0.00	4009	0.00	4009
7.00	MAX	5.15	413	-45.14	300	0.00	4009	0.00	4009
	MIN	1.85	414	-84.48	4009	0.00	4009	0.00	4009
8.00	MAX	4.74	413	-47.04	300	0.00	4009	0.00	4009
	MIN	1.43	414	-86.78	4009	0.00	4009	0.00	4009
9.00	MAX	4.31	4008	-48.52	300	0.00	4009	0.00	4009
	MIN	0.42	413	-88.66	4009	0.00	4009	0.00	4009
10.00	MAX	3.47	4007	-49.59	300	0.00	4009	0.00	4009
	MIN	0.00	413	-90.48	4008	0.00	4009	0.00	4009
11.00	MAX	3.06	4007	-50.24	300	0.00	4009	0.00	4009
	MIN	-2.21	4009	-91.11	4008	0.00	4009	0.00	4009
12.00	MAX	2.64	4007	-50.47	300	0.00	4009	0.00	4009
	MIN	-2.63	4009	-91.38	412	0.00	4009	0.00	4009

MAX/MIN FORCE VALUES FOR MEMB 5, AMONGST ALL SECT LOCATIONS

	FY/ FZ	DIST DIST	LD LD	MZ/ MY	DIST DIST	LD LD	FX	DIST	LD
MAX.	9.27	0.00	315	-17.79	0.00	3003			
	0.00	0.00	300	0.00	0.00	300	15.40 C	0.00	314
MIN.	-2.63	12.00	4009	-91.38	12.00	412			
	0.00	12.00	4009	0.00	12.00	4009	8.75 C	12.00	400

********** END OF FORCE ENVELOPE FROM INTERNAL STORAGE **********

482. LOAD LIST 300 TO 315 400 TO 415 3000 TO 3009 4000 TO 4009
483. PRINT FORCE ENVELOPE NSECTION 4 LIST 1 2

MEMBER FORCE ENVELOPE

ALL UNITS ARE KIP FEET

MEMB	DISTANCE		FY	LD	MZ	LD	FZ	LD	MY	LD
1	0.00	MAX	-5.40	3000	0.00	4009	0.00	4009	0.00	4009
		MIN	-11.06	414	0.00	4009	0.00	4009	0.00	4009
	0.38	MAX	-5.71	3000	4.25	414	0.00	4009	0.00	4009
		MIN	-11.07	414	2.13	3000	0.00	4009	0.00	4009
	0.77	MAX	-6.00	3000	8.49	414	0.00	4009	0.00	4009
		MIN	-11.08	414	4.38	3000	0.00	4009	0.00	4009
	1.15	MAX	-6.29	3000	12.75	414	0.00	4009	0.00	4009
		MIN	-11.09	414	6.74	3000	0.00	4009	0.00	4009
	1.53	MAX	-6.50	4000	17.00	414	0.00	4009	0.00	4009
		MIN	-11.17	314	9.21	3000	0.00	4009	0.00	4009
	1.92	MAX	-6.52	4000	21.27	414	0.00	4009	0.00	4009
		MIN	-11.44	314	11.78	3000	0.00	4009	0.00	4009
	2.30	MAX	-6.55	4000	25.55	414	0.00	4009	0.00	4009
		MIN	-11.70	314	14.45	3000	0.00	4009	0.00	4009
	2.69	MAX	-6.58	4000	29.83	414	0.00	4009	0.00	4009
		MIN	-11.95	314	17.22	3000	0.00	4009	0.00	4009
	3.07	MAX	-6.61	4000	34.22	314	0.00	4009	0.00	4009
		MIN	-12.19	314	19.99	4000	0.00	4009	0.00	4009
	3.45	MAX	-6.65	4000	38.94	314	0.00	4009	0.00	4009
		MIN	-12.42	314	22.53	4000	0.00	4009	0.00	4009
	3.84	MAX	-6.69	4000	43.75	314	0.00	4009	0.00	4009
		MIN	-12.64	314	25.09	4000	0.00	4009	0.00	4009
	4.22	MAX	-6.74	4000	48.64	314	0.00	4009	0.00	4009
		MIN	-12.84	314	27.67	4000	0.00	4009	0.00	4009
	4.60	MAX	-6.79	4000	53.61	314	0.00	4009	0.00	4009
		MIN	-13.04	314	30.27	4000	0.00	4009	0.00	4009

MAX/MIN FORCE VALUES FOR MEMB 1, AMONGST ALL SECT LOCATIONS

	FY/ FZ	DIST DIST	LD LD	MZ/ MY	DIST DIST	LD LD	FX	DIST	LD
MAX.	-5.40	0.00	3000	53.61	4.60	314			
	0.00	0.00	300	0.00	0.00	300	18.50 C	0.00	410
MIN.	-13.04	4.60	314	0.00	0.00	4009			
	0.00	4.60	4009	0.00	4.60	4009	11.14 C	4.60	404

2	0.00	MAX	-5.77	300	0.00	4009	0.00	4009	0.00	4009
		MIN	-11.04	413	0.00	4009	0.00	4009	0.00	4009
	0.38	MAX	-6.07	300	4.24	413	0.00	4009	0.00	4009
		MIN	-11.05	413	2.27	300	0.00	4009	0.00	4009

0.77	MAX	-6.37	300	8.48	413	0.00	4009	0.00	4009
	MIN	-11.06	413	4.66	300	0.00	4009	0.00	4009
1.15	MAX	-6.66	300	12.73	413	0.00	4009	0.00	4009
	MIN	-11.07	413	7.16	300	0.00	4009	0.00	4009
1.53	MAX	-6.87	400	16.98	413	0.00	4009	0.00	4009
	MIN	-11.16	313	9.77	300	0.00	4009	0.00	4009
1.92	MAX	-6.89	400	21.24	413	0.00	4009	0.00	4009
	MIN	-11.42	313	12.48	300	0.00	4009	0.00	4009
2.30	MAX	-6.92	400	25.51	413	0.00	4009	0.00	4009
	MIN	-11.68	313	15.29	300	0.00	4009	0.00	4009
2.69	MAX	-6.95	400	29.79	413	0.00	4009	0.00	4009
	MIN	-11.93	313	18.20	300	0.00	4009	0.00	4009
3.07	MAX	-6.98	400	34.17	313	0.00	4009	0.00	4009
	MIN	-12.17	313	21.11	400	0.00	4009	0.00	4009
3.45	MAX	-7.02	400	38.88	313	0.00	4009	0.00	4009
	MIN	-12.40	313	23.80	400	0.00	4009	0.00	4009
3.84	MAX	-7.06	400	43.68	313	0.00	4009	0.00	4009
	MIN	-12.62	313	26.50	400	0.00	4009	0.00	4009
4.22	MAX	-7.10	400	48.57	313	0.00	4009	0.00	4009
	MIN	-12.83	313	29.22	400	0.00	4009	0.00	4009
4.60	MAX	-7.15	400	53.53	313	0.00	4009	0.00	4009
	MIN	-13.03	313	31.95	400	0.00	4009	0.00	4009

MAX/MIN FORCE VALUES FOR MEMB 2, AMONGST ALL SECT LOCATIONS

	FY/ FZ	DIST DIST	LD LD	MZ/ MY	DIST DIST	LD LD	FX	DIST	LD
MAX.	-5.77	0.00	300	53.53	4.60	313			
	0.00	0.00	300	0.00	0.00	300	16.95 C	0.00	414
MIN.	-13.03	4.60	313	0.00	0.00	4009			
	0.00	4.60	4009	0.00	4.60	4009	10.38 C	4.60	400

********** END OF FORCE ENVELOPE FROM INTERNAL STORAGE **********

484. ***
485. FINISH

```
*********** END OF THE STAAD.Pro RUN ***********

  **** DATE= MAR  1,2016   TIME= 10:41:31 ****

************************************************************
*   For technical assistance on STAAD.Pro, please visit    *
*   http://selectservices.bentley.com/en-US/               *
*                                                          *
*   Details about additional assistance from               *
*   Bentley and Partners can be found at program menu      *
*   Help->Technical Support                                *
*                                                          *
*      Copyright (c) 1997-2014 Bentley Systems, Inc.
*                http://www.bentley.com                    *
************************************************************
```

Software licensed to	Job No	Sheet No 1	Rev
	Part		
Job Title	Ref		
	By BK	Date 12/22/15	Chd
Client	File 42.42ft x 5ft-HL93-Spring	Date/Time 01-Mar-2016 10:23	

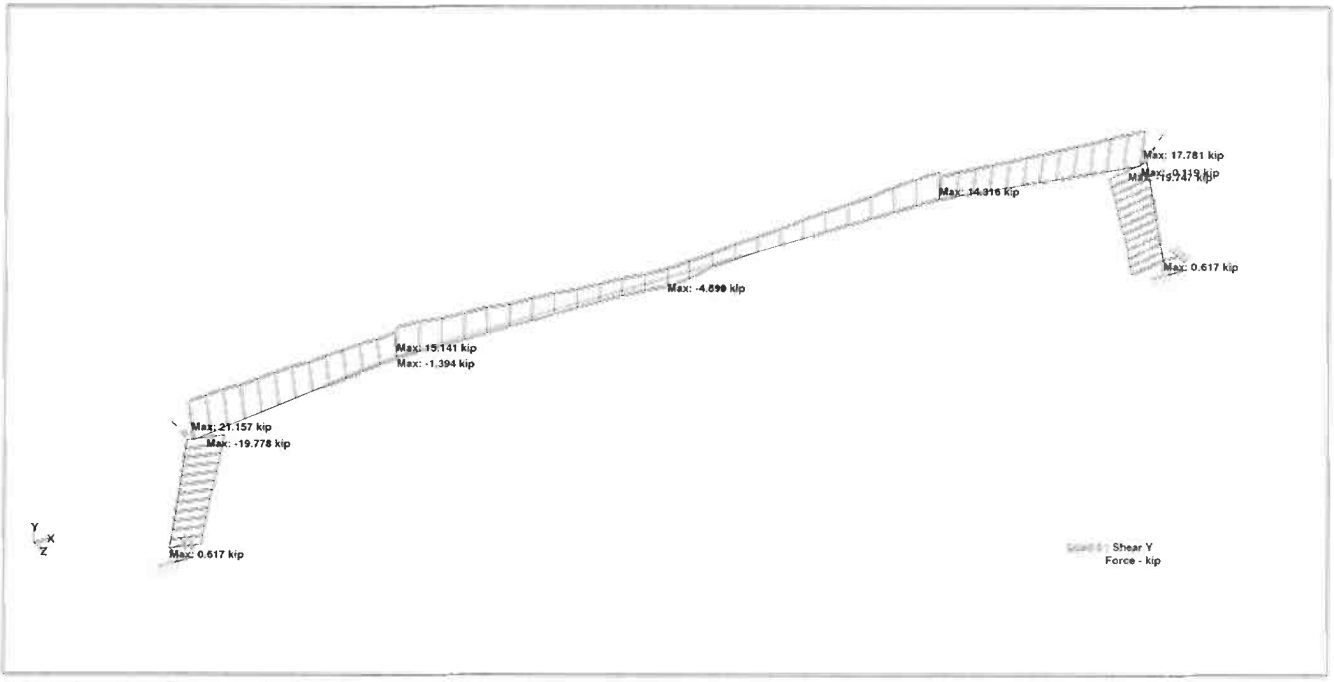

Whole Structure Fy 12kip:1ft 0 Envelope

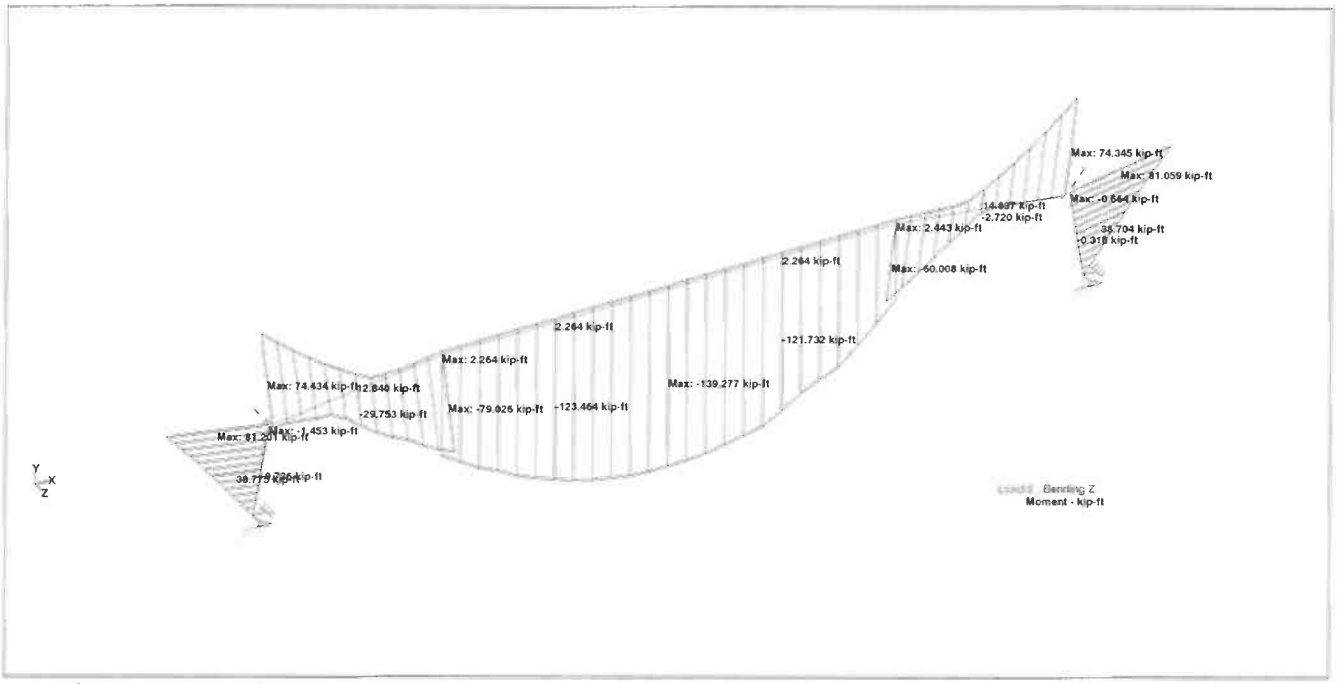

Whole Structure Mz 15kip-ft:1ft 0 Envelope

Section 5
CSI Wing wall 1
Calculations

Concrete Systems Inc.
9 Commercial St., Hudson, NH,03051
Phone 603-889-4163
Fax 603-889-2417

AASHTO LRFD WINGWALL CALCULATIONS

PROJECT NUMBER: R22624 **WW 1**
PROJECT NAME: ROUTE 106 BRIDGE REPLACEMENT T. H. 61 (KENDALL ROAD)
DATE: Feb 25, 2016
BY: BK

INPUT PARAMETERS:

Wall geometry

Panel Height (high) = **7.58 ft**
Panel Height (low) = **7.00 ft**
Wall Panel Length = **8.00 ft**
Entire Wall length = **8.00 ft**
Length of flat = **1.00 ft**
wall thickness = **12**
Wingwall Drop *(high-low)* = 0.58 ft
Wall slope = 0.0829
Max fill ht. *(t/road to b/ww)* = **9.58 ft**
Fill Slope *(perp. to road)* = **2.0**
Wall angle *(perp. to road)* = **68**
Fill slope *(perp. to wall)* = 2.16
Wingwall Panel Connected to Bridge Unit= ☑ Yes

Soil properties

γ_{soil} = **140 pcf**
γ_{conc} = **150 pcf**
$\gamma_{LLsurcharge}$ = **120 pcf**
ϕ_{AB} = **32**
θ_{AB} = **0**
δ_{AB} = **24**
ϕ_{BC} = **32**
θ_{BC} = **30**
δ_{BC} = **16**

Foundation

D_{ftg} = **5.0 ft**
B_{ftg} = **2.5 ft**
o = **9 in**
Q_{soil} = **3.0 KSF**

Railing or barrier

NONE
T/WW to load = **2.00 ft**
impact load = **10.00 K**

	Distance to anchor	Overriding perp. slope @ anchor	Wall height @ anchor	Contrib. width	Perp. slope used @ anchor	h_{eq} LL surch	Anchor Type	Check 'e' & Bearing
Anchor #1	**2.50 ft**	n	7.21 ft	5.25 ft	3.04 ft	**2.00 ft**	C	OK
Anchor #2	**0.00 ft**	n	0.00 ft	0.00 ft	2.16 ft	**2.00 ft**	E	N/A
Anchor #3	**0.00 ft**	n	0.00 ft	0.00 ft	2.16 ft	**2.00 ft**	E	N/A
Anchor #4	**0.00 ft**	n	0.00 ft	0.00 ft	2.16 ft	**2.00 ft**	E	N/A
Anchor #5	**0.00 ft**	n	0.00 ft	0.00 ft	2.16 ft	**2.00 ft**	E	N/A

CALCULATION NOTES:

1. Wingwall calculations are done in accordance with the current edition of the *AASHTO LRFD Bridge Design Specifications* .
2. Moments are summed about the *toe (face) of the wingwall* (point "o" on attached "Pressure Diagram").
3. K_a is calculated using equation found in former AASHTO LRFD Specifications Equation 3.11.5.3-1

$$K_a = \frac{\sin^2(\phi+\theta)}{\sin^2\theta\sin(\theta-\delta)\left[1+\sqrt{\frac{\sin(\phi+\delta)\sin(\phi-\beta)}{\sin(\theta-\delta)\sin(\theta+\beta)}}\right]^2}$$

4. Only 80% of the soil unit weight is used for the eccentricity/ stability calculation. This is a conservative assumption as explained in the full HITEC report "Evaluation of the CON/SPAN® Wingwall System"
5. The full 100% of the soil unit weight is used for the bearing calculations.
6. These calculations conservatively assume that the wall anchor has the same unit weight as soil.
7. The wingwall angle (in plan view) is measured from perpendicular to roadway.
8. Barrier loads are distributed per AASHTO LRFD Specifications Section 13

Anchor 1			
SOIL PROPERTY	**DESCRIPTION**	**VALUE section AB**	**VALUE section BC**
ϕ	friction angle of soil	32	32
θ	angle of wall to the y-axis	0	30
δ	wall-soil friction angle *(measured from a perpendicular with the wall)* =0, if significant vibrations of backfill or modules settling more than backfill. = 0.5*ϕ, if modules are uniform width. = 0.75*ϕ, if averaged pressure surface	24	16
x	side slopes from road (x:1)	2.0	
α	wingwall angle (angle w/ perpendicular to road)	68	
	slope of backfill (perpendicular to wall)	3.04	
β	angle of backfill (perpendicular to wall)	18.2	18.2
	$(K_a)_{AB}$ =	0.36	$(K_a)_{BC}$ = 0.13

Anchor 1

VARIABLE	DESCRIPTION OF VARIABLE	VALUE	
H	wingwall design height at anchor location (feet)	7.21	
h_{surch}	height of live load surcharge (feet)	2.00	
t	thickness of wingwall (inches)	12	
δ	wall friction angle for section AB	24	
β	angle of backfill (degrees)	18.2	
L	length of anchor (feet)	5.04	C
γ_s	unit weight of backfill (kcf)	140	
γ_c	unit weight of concrete (kcf)	150	
γ_{surch}	unit weight of surcharge (kcf)	120	*(per AASHTO LRFD 3.11.6.4)*

Description	Vertical Reaction (k/ft)	Horizontal Reaction (k/ft)	Lever Arm (ft)	Disturbing Moment (ft-k/ft)	"Stability" Resisting Moment (ft-k/ft)	"Bearing" Resisting Moment (ft-k/ft)
wall (W_w)	1.08		0.50		0.54	0.54
soil I_A	0.59		4.36		2.04	2.55
soil I_B	2.62		3.52		7.37	9.21
soil II_A	1.10		2.13		1.87	2.34
soil II_B	0.68		4.02		2.20	2.75
$W_{surcharge(vert)}$	1.21		3.52		4.26	4.26
$W_{parapet}$	0.00		0.50		0.00	0.00
Soil Pressure						
$(P_{AB})_v$	0.30		6.04		1.79	1.79
$(P_{AB})_h$		0.66	5.29	3.52		
$(P_{BC1})_v$	-0.11		4.89		-0.54	-0.54
$(P_{BC1})_h$		0.44	1.50	0.66		
$(P_{BC2})_v$	-0.04		4.50		-0.18	-0.18
$(P_{BC2})_h$		0.16	0.83	0.14		
$P_{surcharch(hor)}$		0.57	4.43	2.53		
TOTALS =	7.42	1.84		6.84	19.35	22.72

AASHTO LRFD C11.6.3.3 states: The specified criteria for the location of the resultant, coupled with investigation of the bearing pressure, replaces the investigation of the ratio of stabilizing moment to overturning moment. See Section III Soil Bearing Pressure.

II. CHECK OVERTURNING STABILITY AT CONNECTION PLATES

The connection plates provide stability for the portion of the wall not supported by the anchors, i.e., the section closest to the culvert. (See wingwall sketch)

Data:

number of plates = 2

ϕ = 32

δ = 24

γ_s = 0.140 kcf

$\gamma_{(surcharge)}$ = 0.120 kcf

wall height @ plates (H) = **7.58 ft**

Live load surcharge (h) = **2.00 ft**

section width for plates (S) = 2.8 ft

y_{Psh} = H/3 = 2.5 ft

y_{PLL} = H/2 = 3.8 ft

y_{p1} = **0.75 ft**

y_{p2} = **4.75 ft**

A_{bolt} = 0.79

t_{plate} = 1.00 in

$\phi F_{(bolt)}$ = 30 ksi

$F_{y(plate)}$ = 36 ksi

Find soil pressure on section:

Because the wall is more rigid at the plates, at-rest soil pressure coefficient (K_o) is used.

$K_o = 1\text{-}\sin\phi = 0.47$ *(AASHTO LRFD eq. 3.11.5.2-1)*

$P_{sh} = (^1/_2)\gamma_s K_o H^2(S)(\cos\delta) = 4.75$ K

$P_{LLh} = K_o\gamma_s HhS(\cos\delta) = 2.15$ K

$P_{impact} = P_{imp}S/L_{distr} = 0$

Find reaction at plate:

Sum moments about bottom plate, p_1

$\Sigma M_{p1} = 0 = P_{sh}(y_{Psh} - y_{p1}) - p_2(y_{p2} - y_{p1})$ *(dead load)*

$\Sigma M_{p1} = 0 = P_{LL}(y_{PLL} - y_{p1}) - p_{2LL}(y_{p2} - y_{p1}) + P_{imp}(y_{imp} - y_{p1}$ *(live load)*

$p_2 = \dfrac{P_{sh}(y_{Psh} - y_{p1})}{(y_{p2} - y_{p1})} = 2.11$ K $\qquad p_1 = P_{sh} - p_2 = 2.64$ K

$p_{2LL} = \dfrac{P_{LLh}(y_{pLL} - y_{p1}) + P_{imp}(y_{imp} - y_{p1})}{(y_{p2} - y_{p1})} = 1.63$ K $\qquad p_{1LL} = P_{LL} + P_{imp} - p_{2LL} = 0.52$ K

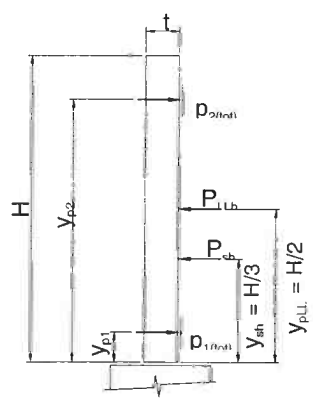

Find factored reaction:

Load factors are per AASHTO LRFD 3.4.1-1 & Table 3.4.1-2

$p_{fac} = \gamma p_{max(DL)} + (1.75)p_{max(LL)}$

$p_{fac} = (1.35)p_{(DL)} + (1.75)p_{(LL)}$

$p_{1(tot,\ factored)}$ = 4.47 K

$p_{2(tot,\ factored)}$ = 5.71 K ***Controls***

$p_{(max,\ factored)}$ = 5.71 K

Check bolts :

The special Richmond Screw Anchor *"wingwall insert" pullout capacity was obtained from the manufacturer and has approx. 3:1 safety factor.*

Pullout capacity = 16.5 k/bolt ***Controls***

Bolt tension = $\phi F A_{bolt}$ = 23.7 k/bolt

F.S. = $\dfrac{\text{Capacity* 2 bolts}}{(p_{fac})}$ = 5.78 *> 1.0, OK*

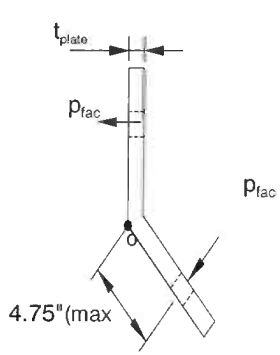

Check bending of plate:

Sum moments about corner of plate, point "o"

$\Sigma M_o = (p_{fac})(4.75")$ = 27101 lb-in

$I_{pl} = bh^3/12$ = 0.83 in^4

$\sigma_{max} = \dfrac{My}{I_{pl}}$ = 16 ksi $\quad < \phi F_y = 0.9F_y$ *OK*

(AISC LRFD-F2 states ϕ_b = 0.9)

length of connection plate is 10"

III. CHECK SOIL BEARING PRESSURE AND SLIDING UNDER CAST-IN-PLACE FOOTING

The reaction will be supported on the horizontal portion of the anchor plus the footing.

R_v = Total vertical reaction at anchor (using 100% of soil weight).

R_h = Total horizontal reaction at anchor.

M_D = Disturbing moment at anchor.

M_{Rb} = Resisting moment due to 100% of soil at anchor.

Summary of loads at anchors

anchor	anchor base length	R_v ($^K/_F$)	R_h ($^K/_F$)	M_D ($^{K\text{-}F}/_F$)	M_{Rb} ($^{K\text{-}F}/_F$)
1	2.73	7.42	1.84	6.84	22.72
2	4.73	0.00	0.00	0.00	0.00
3	4.73	0.00	0.00	0.00	0.00
4	4.73	0.00	0.00	0.00	0.00
5	4.73	0.00	0.00	0.00	0.00

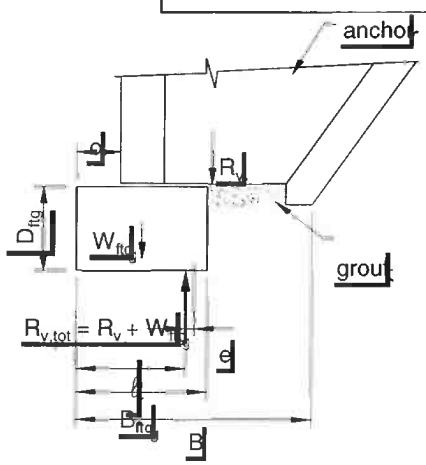

Check the bearing pressure under the wall

D_{ftg} = 5.0 ft

B_{ftg} = 2.5 ft

o = 9 in

W_{ftg} = 1.88 klf

Q_{allow} = 3.0 KSF

$R_{v,tot}$ = total vertical reaction ($R_v + W_{ftg}$)

B = bearing width

= maximum of (anchor base length + o) or B_{ftg}

ℓ = location of vertical resultant ($R_{v,tot}$) along bearing width

$$= \frac{R_v((M_{Rb}-M_D)/R_v + o) + W_{ftg}(B/2)}{R_{v,tot}}$$

e = eccentricity of resultant

= B/2 - ℓ

B' = adjusted bearing width

= B - 2e

q = bearing pressure *(must be less than Q_{allow})*

= $R_{v,tot}$ / B'

Check bearing pressure at each anchor

anchor	B (ft)	ℓ (ft)	e	check e	B' (ft)	q	check q
1	4.48	2.56	-0.32	*OK*	3.84	2.42	*OK*
2	0.00	0.00	0.00	*n/a*	0.00	0.00	*n/a*
3	0.00	0.00	0.00	*n/a*	0.00	0.00	*n/a*
4	0.00	0.00	0.00	*n/a*	0.00	0.00	*n/a*
5	0.00	0.00	0.00	*n/a*	0.00	0.00	*n/a*

Check the sliding factor of safety

$R_R = \phi * R_{V,tot} * .8 * \tan \phi$ *(AASHTO LRFD 10.6.3.4)*

(must be >R_h)

ϕ = 0.9 *from AASHTO LRFD Table 10.5.5.2.2-1 for precast concrete on sand*

Check sliding at each anchor

anchor	$R_{v,tot}$ (k/f)	R_R (k/f)	R_h	check $R_R > R_h$
1	9.30	4.18	1.84	*OK*
2	0.00	0.00	0.02	*n/a*
3	0.00	0.00	0.02	*n/a*
4	0.00	0.00	0.02	*n/a*
5	0.00	0.00	0.02	*n/a*

IV. CHECK BENDING OF FOOTING CROSS SECTION

Bending need not be considered in footings when the footing depth, D, exceeds the projection, pr, of the footing beyond the edge of the wall.

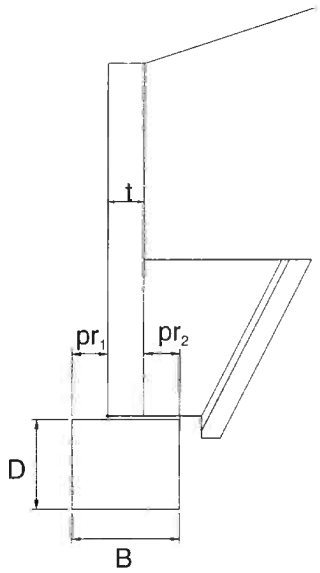

pr_1 = offset(o) = 9 in

pr_2 = B - o - t = 9 in **Controls**

pr_{max} = 9 in

projection < D *OK*

Use minimal steel stirrups
#4 @ 48 inches o.c.

V. CHECK WALL SECTION - BENDING AND SHEAR (vertical bars)

Assumptions: *1. Wall stem is cantilevered from anchor.*
2. Use active earth pressure because wall can deflect at top.
3. Use K_a and δ from Anchor Stability Calculations.

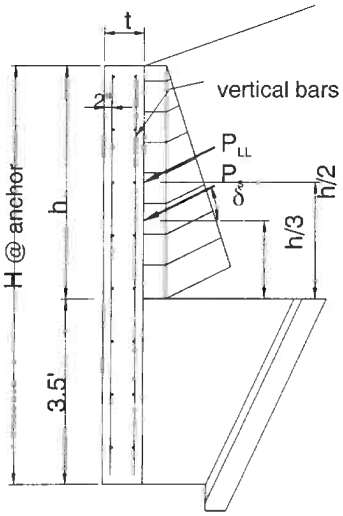

Horizontal loads:

$P_{sh} = (^1/_2)\gamma_s K_a h^2(\cos\delta)$

$P_{LLh} = \gamma_s K_a h(h_{surcharge})(\cos\delta)$

$P_{impact} = P_{imp}/L_{distr}$

Factored forces:

Load factors are per AASHTO LRFD 3.4.1-1 & Table 3.4.1-2

M_u = Section width$[(1.35)P_{sh}(h/3) + (1.75)P_{LLh}(h/2) + (1.75)P_{imp}(h+y_{imp})]$

V_u = Section width$[(1.35)P_{sh} + (1.75P_{LLh} + (1.75P_{imp}]$

Summary of forces at anchors

anchor	H (ft)	h (ft)	$h_{surcharge}$ (ft)	P_{sh} (k/ft)	P_{LLh} (k/ft)	P_{imp} (k/ft)	M_u (k-ft)	V_u (k)
1	7.21	3.71	2.00	0.32	0.29	0.00	7.77	4.94
2	0.00	0.00	2.00	0.00	0.00	0.00	0.00	0.00
3	0.00	0.00	2.00	0.00	0.00	0.00	0.00	0.00
4	0.00	0.00	2.00	0.00	0.00	0.00	0.00	0.00
5	0.00	0.00	2.00	0.00	0.00	0.00	0.00	0.00

Check bending (reinforcment) at anchors

f'_c = **5000 psi**

f_y = **60000 psi**

ϕ_b = **0.9** *(AASHTO LRFD 5.4.2.1)*

$m = f_y/0.85f'_c$ = 14.12

d = 9.75 in

b = anchor's contrib. width

$$R_u = \frac{M_u}{\phi_b b d^2}$$

$$\rho_{reqd} = \frac{1}{m}\left(1-\sqrt{1-\frac{2mR_u}{f_y}}\right)$$

ρ_{min} = *AASHTO LRFD 5.7.3.3.2 states the minimum reinforcement is the lesser of 1.2Mcr OR 1.33 times the factored moment required by strength.*

anchor	R_u (psi)	ρ_{reqd}	ρ_{cr}	ρ_{min}	$A_{s\ min}$ (in^2)	$A_{s\ actual}$ (in^2)	check
1	17	0.0003	0.0030	0.0004	0.23	1.08	OK
2	0	0.0000	0.0030	0.0000	0.00	#######	N/A
3	0	0.0000	0.0030	0.0000	0.00	#######	N/A
4	0	0.0000	0.0030	0.0000	0.00	#######	N/A
5	0	0.0000	0.0030	0.0000	0.00	#######	N/A

Check shear

$V_c = (.0316)*\beta \sqrt{f'_c}\, b_v d_v$ *(V_c calculated by AASHTO LRFD eq'n 5.8.3.3-3)*

$\phi = 0.9$ *(AASHTO LRFD 5.5.4.2.1)*

$\beta = 2$ *(AASHTO LRFD 5.8.3.4.1)*

$d_v = .9*d$ or $.72*t$ *whichever is greater (AASHTO LRFD 5.8.2.9)*

anchor	ϕV_c	check $V_u < \phi V_c$
1	70.31	*OK*
2	0.00	*N/A*
3	0.00	*N/A*
4	0.00	*N/A*
5	0.00	*N/A*

VI. CHECK TYPE 'C' ANCHOR ATTACHMENT

Check capacity of connector for pullout (truncated pyramid failure), shear, tension, and combined shear & tension

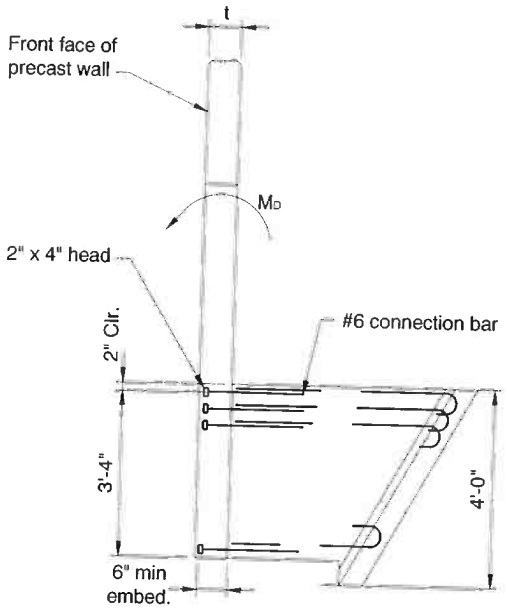

embedment depth (ℓ_e)= **6 in**

Attachment depth = 42 in

X head dimension (Xd_{head}) = 3 in

Y head dimension (Yd_{head}) = 3 in

Bar size = **# 6**

rows = **3**

row spacing = **5 in**

wall thickness (t) = 12 in

x = Xd_{head} (*since only 1 column*) = 3 in

y = (#rows-1)(row spacing) + Yd_{head} = 13 in

z = min(x,y) = 3 in

h_{min} = (z + 2ℓ_e)/2 = 7.5 in

A_R = (x+2ℓ_e-2t)(y+2ℓ_e-2t) = -9.0 in^2

f'_c = **5000 psi**

f_y = **60000 psi**

$\phi_{concrete}$ = 0.85

ϕ_{steel} = 0.90

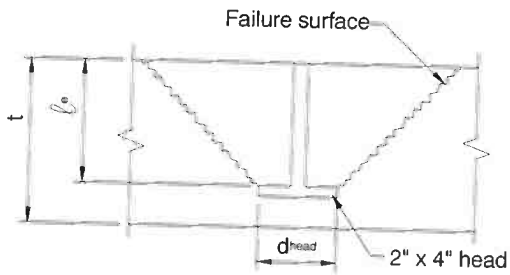

TENSION CAPACITY (Per PCI Design Handbook §6.5.2.1)

t > hmin: failure surface does not penetrate slab

Find pullout capacity of concrete

if t >= h_{min}, $\phi P_c = \phi 2.67 sqrt(f'c)(x+2\ell_e)(y+2\ell_e)$

if t < h_{min}, $\phi P_c = \phi 2.67 sqrt(f'c)[(x+2\ell_e)(y+2\ell_e) - A_R]$

ϕP_c = 60.18 K

Find tension capacity of studs

$\phi P_y = \phi f_y (A_{bar})$(#bars)

ϕP_y = 71.57 K

controlling tension capacity (ϕP) = 60.18 K

Find moment capacity of anchor

Moment capacity of anchor (ϕM_n) = $\phi P(d-a/2)$

d = attachment depth - bar cover - ($y-Yd_{head}$)/2 = 35 in

a = $A_s f_y / 0.85 f'_c b$ = 3.12 in

ϕM_n = 167.70 k-f

SHEAR CAPACITY (Per PCI Design Handbook §6.5.2.2)

Find shear capacity of concrete

$\phi V_c = \phi V'_c C_w C_t C_c$

$\phi V'_c = \phi 12.5 d_e^{1.5} \text{sqrt}(f'_c)$ = 187.4 K

$C_w = 1 + \text{spacing}/3.5d_e < \#\text{columns}$ = 1.0

$C_t = t/1.3d_e <= 1.0$ = 0.23

$C_c = 0.4 + 0.7d_c/de <= 1.0$ = 0.9

d_e = attachment depth - cover - bar dia/2 = 40 in

d_c = distance to side of wingwall = 30 in

$\phi V_c = \phi V'_c C_w C_t C_c =$ 40.60 K

Find shear capacity of studs

$\phi V_y = \phi 0.9 f_y A_{bar}(\#\text{bars})$

ϕV_y = 64.41 K

controlling shear capacity (ϕV) = 40.60 K

FIND LOADS

Unfactored loads on anchors:

$M_{D(DL)}$ = (sec width)$M_{D(anchor)}$

$M_{D(LL)}$ = (sec width)($M_{D(anchor)}$ + P_{imp}*(wall ht + y_{imp}))

Factored loads:

Load factors are per AASHTO 3.22.1 & Table 3.22.1A

$M_u = (1.3)(1.3)M_{D(DL)} + (1.3)(1.67)M_{D(LL)}$

$P_u = M_u$ /(d-a/2)*cos(bar angle)

$V_u = M_u$ /(d-a/2)*sin(bar angle)

bar angle = 0°

Summary of forces

anchor	$M_{D(DL)}$ ft-k	$M_{D(LL)}$ ft-k	M_u ft-k	P_u k	V_u k
1	22.6	13.3	67.1	24.1	0.0
2	0.0	0.0	0.0	0.0	0.0
3	0.0	0.0	0.0	0.0	0.0
4	0.0	0.0	0.0	0.0	0.0
5	0.0	0.0	0.0	0.0	0.0

Summary of results

anchor	check $\phi M_n > M_u$	check $\phi P > P_u$	check $\phi V > V_u$	check combined V_c & P_c	check combined V_s & P_s
1	*OK*	*OK*	*OK*	*OK*	*OK*
2	*n/a*	*n/a*	*n/a*	*n/a*	*n/a*
3	*n/a*	*n/a*	*n/a*	*n/a*	*n/a*
4	*n/a*	*n/a*	*n/a*	*n/a*	*n/a*
5	*n/a*	*n/a*	*n/a*	*n/a*	*n/a*

NOTE:

ULTIMATE PULLOUT CAPACITY 33,000 POUNDS IN 3,000 PSI CONCRETE.

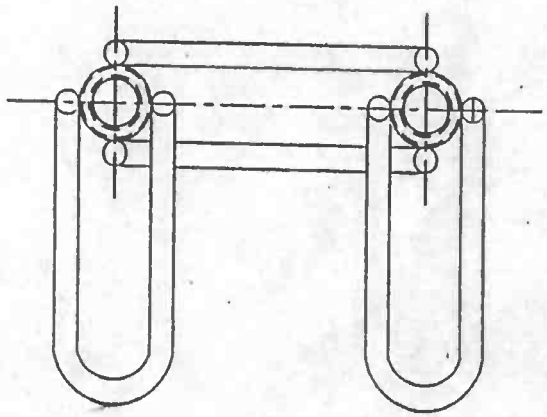

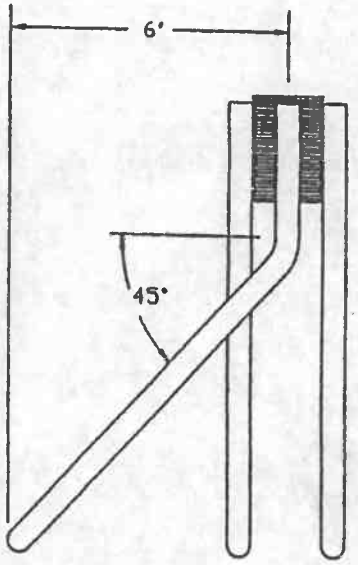

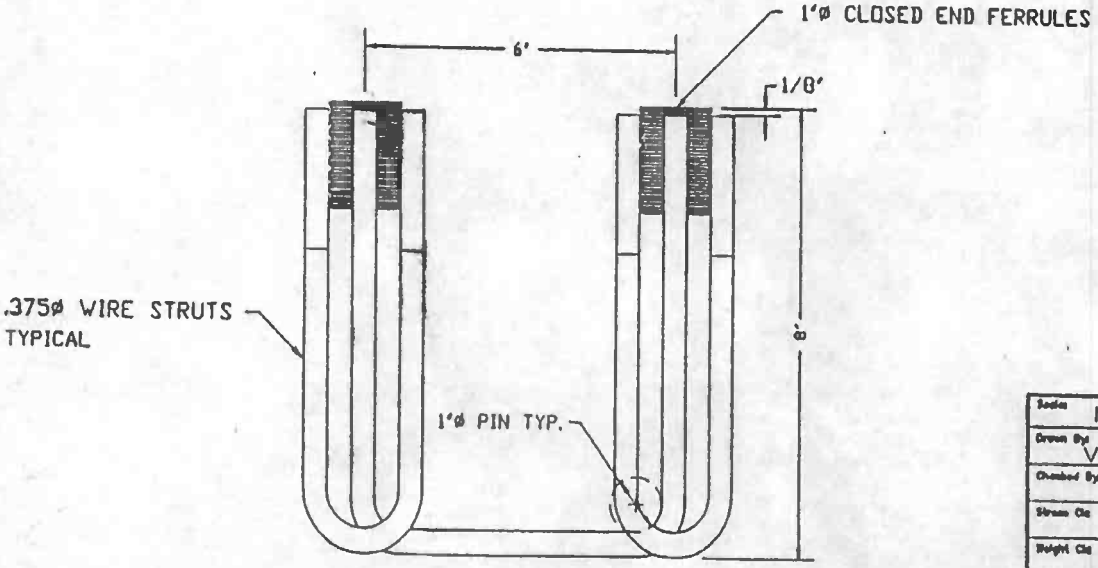

Scale NONE	Date	RICHMOND Screw Anchor Co. 7214 Burns Street Fort Worth, TX 76118
Drawn By VADIM	2/7/90	
Checked By		1'ø TWO BOLT WINGWALL PRESET ANCHOR
Stress Cls		
Weight Cls		
Approved		Product Symbol / Drawing No. D-694 / Rel. Date
Customer		

Section 6
CSI Wing wall 2
Calculations

Concrete Systems Inc.
9 Commercial St., Hudson, NH,03051
Phone 603-889-4163
Fax 603-889-2417

AASHTO LRFD WINGWALL CALCULATIONS

PROJECT NUMBER: R22624
PROJECT NAME: ROUTE 106 BRIDGE REPLACEMENT T. H. 61 (KENDALL ROAD)
DATE: Feb 25, 2016
BY: BK

WW 2

INPUT PARAMETERS:

Wall geometry

Panel Height (high) = **8.33 ft**
Panel Height (low) = **5.50 ft**
Wall Panel Length = **8.00 ft**
Entire Wall length = **8.00 ft**
Length of flat = **1.00 ft**
wall thickness = **12**
Wingwall Drop *(high-low)* = 2.83 ft
Wall slope = 0.4043
Max fill ht. *(t/road to b/ww)* = **10.33 ft**
Fill Slope *(perp. to road)* = **1.5**
Wall angle *(perp. to road)* = **0**
Fill slope *(perp. to wall)* = 0.00
Wingwall Panel Connected to Bridge Unit= ☑ Yes

Soil properties

γ_{soil} = **140 pcf**
γ_{conc} = **150 pcf**
$\gamma_{LLsurcharge}$ = **120 pcf**
ϕ_{AB} = **32**
θ_{AB} = **0**
δ_{AB} = **24**
ϕ_{BC} = **32**
θ_{BC} = **30**
δ_{BC} = **16**

Foundation

D_{ftg} = **5.0 ft**
B_{ftg} = **2.5 ft**
o = **9 in**
Q_{soil} = **3.0 KSF**

Railing or barrier

NONE
T/WW to load = **2.00 ft**
impact load = **10.00 K**

	Distance to anchor	Overriding perp. slope @ anchor	Wall height @ anchor	Contrib. width	Perp. slope used @ anchor	h_{eq} LL surch	Anchor Type	Check 'e' & Bearing
Anchor #1	**2.50 ft**	n	6.51 ft	5.25 ft	0.00 ft	**2.00 ft**	C	OK
Anchor #2	**0.00 ft**	n	0.00 ft	0.00 ft	0.00 ft	**2.00 ft**	E	N/A
Anchor #3	**0.00 ft**	n	0.00 ft	0.00 ft	0.00 ft	**2.00 ft**	E	N/A
Anchor #4	**0.00 ft**	n	0.00 ft	0.00 ft	0.00 ft	**2.00 ft**	E	N/A
Anchor #5	**0.00 ft**	n	0.00 ft	0.00 ft	0.00 ft	**2.00 ft**	E	N/A

CALCULATION NOTES:

1. Wingwall calculations are done in accordance with the current edition of the *AASHTO LRFD Bridge Design Specifications* .
2. Moments are summed about the *toe (face) of the wingwall* (point "o" on attached "Pressure Diagram").
3. K_a is calculated using equation found in former AASHTO LRFD Specifications Equation 3.11.5.3-1

$$K_a = \frac{\sin^2(\phi + \theta)}{\sin^2\theta \sin(\theta - \delta)\left[1 + \sqrt{\frac{\sin(\phi + \delta)\sin(\phi - \beta)}{\sin(\theta - \delta)\sin(\theta + \beta)}}\right]^2}$$

4. Only 80% of the soil unit weight is used for the eccentricity/ stability calculation. This is a conservative assumption as explained in the full HITEC report "Evaluation of the CON/SPAN® Wingwall System"
5. The full 100% of the soil unit weight is used for the bearing calculations.
6. These calculations conservatively assume that the wall anchor has the same unit weight as soil.
7. The wingwall angle (in plan view) is measured from perpendicular to roadway.
8. Barrier loads are distributed per AASHTO LRFD Specifications Section 13

Anchor 1			
SOIL PROPERTY	**DESCRIPTION**	**VALUE section AB**	**VALUE section BC**
ϕ	friction angle of soil	32	32
θ	angle of wall to the y-axis	0	30
δ	wall-soil friction angle *(measured from a perpendicular with the wall)* =0, if significant vibrations of backfill or modules settling more than backfill. = 0.5*ϕ, if modules are uniform width. = 0.75*ϕ, if averaged pressure surface	24	16
x	side slopes from road (x:1)	1.5	
α	wingwall angle (angle w/ perpendicular to road)	0	
	slope of backfill (perpendicular to wall)	0.00	
β	angle of backfill (perpendicular to wall)	0.0	0.0
	$(K_a)_{AB}$ =	0.27	$(K_a)_{BC}$ = 0.11

Anchor 1

VARIABLE	DESCRIPTION OF VARIABLE	VALUE	
H	wingwall design height at anchor location (feet)	6.51	
h_{surch}	height of live load surcharge (feet)	2.00	
t	thickness of wingwall (inches)	12	
δ	wall friction angle for section AB	24	
β	angle of backfill (degrees)	0.0	
L	length of anchor (feet)	5.04	C
γ_s	unit weight of backfill (kcf)	140	
γ_c	unit weight of concrete (kcf)	150	
γ_{surch}	unit weight of surcharge (kcf)	120	*(per AASHTO LRFD 3.11.6.4)*

Description	Vertical Reaction (k/ft)	Horizontal Reaction (k/ft)	Lever Arm (ft)	Disturbing Moment (ft-k/ft)	"Stability" Resisting Moment (ft-k/ft)	"Bearing" Resisting Moment (ft-k/ft)
wall (W_w)	0.98		0.50		0.49	0.49
soil I_A	0.00		4.36		0.00	0.00
soil I_B	2.12		3.52		5.98	7.48
soil II_A	1.10		2.13		1.87	2.34
soil II_B	0.68		4.02		2.20	2.75
$W_{surcharge(vert)}$	1.21		3.52		4.26	4.26
$W_{parapet}$	0.00		0.50		0.00	0.00
Soil Pressure						
$(P_{AB})_v$	0.07		6.04		0.43	0.43
$(P_{AB})_h$		0.16	4.50	0.72		
$(P_{BC1})_v$	-0.05		4.89		-0.25	-0.25
$(P_{BC1})_h$		0.20	1.50	0.30		
$(P_{BC2})_v$	-0.03		4.50		-0.15	-0.15
$(P_{BC2})_h$		0.13	0.83	0.11		
$P_{surcharch(hor)}$		0.39	3.26	1.28		
TOTALS =	6.08	0.89		2.41	14.83	17.35

AASHTO LRFD C11.6.3.3 states: The specified criteria for the location of the resultant, coupled with investigation of the bearing pressure, replaces the investigation of the ratio of stabilizing moment to overturning moment. See Section III Soil Bearing Pressure.

II. CHECK OVERTURNING STABILITY AT CONNECTION PLATES

The connection plates provide stability for the portion of the wall not supported by the anchors, i.e., the section closest to the culvert. (See wingwall sketch)

Data:

number of plates = 2

ϕ = 32

δ = 24

γ_s = 0.140 kcf

$\gamma_{(surcharge)}$ = 0.120 kcf

wall height @ plates (H) = **8.33 ft**

Live load surcharge (h) = **2.00 ft**

section width for plates (S) = 2.8 ft

$y_{Psh} = H/3$ = 2.8 ft

$y_{PLL} = H/2$ = 4.2 ft

y_{p1} = **0.75 ft**

y_{p2} = **4.75 ft**

A_{bolt} = 0.79

t_{plate} = 1.00 in

$\phi F_{(bolt)}$ = 30 ksi

$F_{y(plate)}$ = 36 ksi

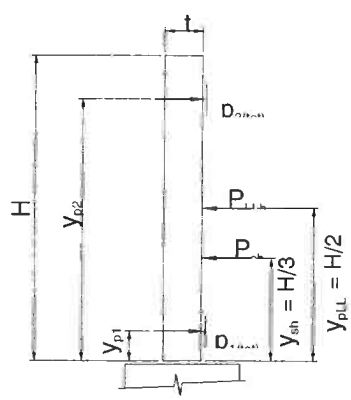

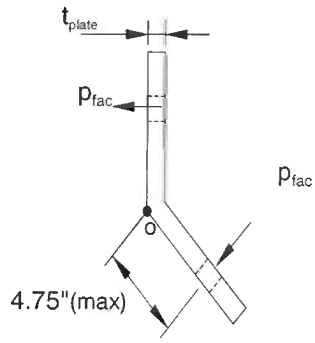

length of connection plate is 10"

Find soil pressure on section:

Because the wall is more rigid at the plates, at-rest soil pressure coefficient (K_o) is used.

$K_o = 1\text{-}\sin\phi = 0.47$ *(AASHTO LRFD eq. 3.11.5.2-1)*

$P_{sh} = (^1/_2)\gamma_s K_o H^2(S)(\cos\delta) = 5.74$ K

$P_{LLh} = K_o\gamma_s HhS(\cos\delta) = 2.36$ K

$P_{impact} = P_{imp}S/L_{distr} = 0$

Find reaction at plate:

Sum moments about bottom plate, p_1

$\Sigma M_{p1} = 0 = P_{sh}(y_{Psh} - y_{p1}) - p_2(y_{p2} - y_{p1})$ *(dead load)*

$\Sigma M_{p1} = 0 = P_{LL}(y_{PLL} - y_{p1}) - p_{2LL}(y_{p2} - y_{p1}) + P_{imp}(y_{imp} - y_{p1})$ *(live load)*

$p_2 = \dfrac{P_{sh}(y_{Psh} - y_{p1})}{(y_{p2} - y_{p1})} = 2.91$ K $\qquad p_1 = P_{sh} - p_2 = 2.83$ K

$p_{2LL} = \dfrac{P_{LLh}(y_{pLL} - y_{p1}) + P_{imp}(y_{imp} - y_{p1})}{(y_{p2} - y_{p1})} = 2.02$ K $\qquad p_{1LL} = P_{LL} + P_{imp} - p_{2LL} = 0.35$ K

Find factored reaction:

Load factors are per AASHTO LRFD 3.4.1-1 & Table 3.4.1-2

$p_{fac} = \gamma p_{max(DL)} + (1.75)p_{max(LL)}$

$p_{fac} = (1.35)p_{(DL)} + (1.75)p_{(LL)}$

$p_{1(tot,\ factored)} = 4.42$ K

$p_{2(tot,\ factored)} = 7.45$ K ***Controls***

$p_{(max,\ factored)} = 7.45$ K

Check bolts:

The special Richmond Screw Anchor *"wingwall insert" pullout capacity was obtained from the manufacturer and has approx. 3:1 safety factor.*

Pullout capacity = 16.5 k/bolt ***Controls***

Bolt tension = $\phi F A_{bolt}$ = 23.7 k/bolt

$F.S. = \dfrac{\text{Capacity* 2 bolts}}{(p_{fac})} = 4.43$ *> 1.0, OK*

Check bending of plate:

Sum moments about corner of plate, point "o"

$\Sigma M_o = (p_{fac})(4.75") = 35392$ lb-in

$I_{pl} = bh^3/12 = 0.83$ in^4

$\sigma_{max} = \dfrac{My}{I_{pl}} = 21$ ksi $< \phi F_y = 0.9F_y$ *OK*

(AISC LRFD-F2 states $\phi_b = 0.9$)

III. CHECK SOIL BEARING PRESSURE AND SLIDING UNDER CAST-IN-PLACE FOOTING

The reaction will be supported on the horizontal portion of the anchor plus the footing.

R_v = Total vertical reaction at anchor (using 100% of soil weight).

R_h = Total horizontal reaction at anchor.

M_D = Disturbing moment at anchor.

M_{Rb} = Resisting moment due to 100% of soil at anchor.

Summary of loads at anchors

anchor	anchor base length	R_v ($^K/_F$)	R_h ($^K/_F$)	M_D ($^{K\text{-}F}/_F$)	M_{Rb} ($^{K\text{-}F}/_F$)
1	2.73	6.08	0.89	2.41	17.35
2	4.73	0.00	0.00	0.00	0.00
3	4.73	0.00	0.00	0.00	0.00
4	4.73	0.00	0.00	0.00	0.00
5	4.73	0.00	0.00	0.00	0.00

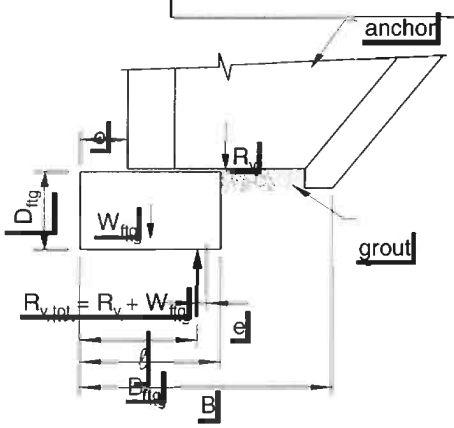

Check the bearing pressure under the wall

D_{ftg} = 5.0 ft

B_{ftg} = 2.5 ft

o = 9 in

W_{ftg} = 1.88 klf

Q_{allow} = 3.0 KSF

$R_{v,tot}$ = total vertical reaction ($R_v + W_{ftg}$)

B = bearing width

= maximum of (anchor base length + o) or B_{ftg}

ℓ = location of vertical resultant ($R_{v,tot}$) along bearing width

$$= \frac{R_v((M_{Rb}-M_D)/R_v + o) + W_{ftg}(B/2)}{R_{v,tot}}$$

e = eccentricity of resultant

= B/2 - ℓ

B' = adjusted bearing width

= B - 2e

q = bearing pressure *(must be less than Q_{allow})*

= $R_{v,tot}$ / B'

Check bearing pressure at each anchor

anchor	B (ft)	ℓ (ft)	e	check e	B' (ft)	q	check q
1	4.48	2.75	-0.51	*OK*	3.47	2.29	*OK*
2	0.00	0.00	0.00	*n/a*	0.00	0.00	*n/a*
3	0.00	0.00	0.00	*n/a*	0.00	0.00	*n/a*
4	0.00	0.00	0.00	*n/a*	0.00	0.00	*n/a*
5	0.00	0.00	0.00	*n/a*	0.00	0.00	*n/a*

Check the sliding factor of safety

$H_R = \phi * R_{V,tot} * .8 * \tan \phi$ *(AASHTO LRFD 10.6.3.4)*

(must be >R_h)

ϕ = 0.9 *from AASHTO LRFD Table 10.5.5.2.2-1 for precast concrete on sand*

Check sliding at each anchor

anchor	$R_{v,tot}$ (k/f)	R_R (k/f)	R_h	check $R_R > R_h$
1	7.96	3.58	0.89	*OK*
2	0.00	0.00	0.02	*n/a*
3	0.00	0.00	0.02	*n/a*
4	0.00	0.00	0.02	*n/a*
5	0.00	0.00	0.02	*n/a*

IV. CHECK BENDING OF FOOTING CROSS SECTION

Bending need not be considered in footings when the footing depth, D, exceeds the projection, pr, of the footing beyond the edge of the wall.

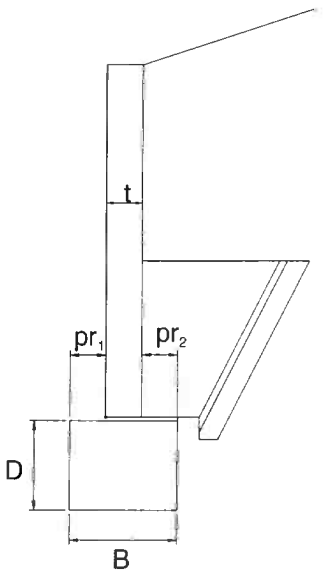

pr_1 = offset(o) = 9 in

pr_2 = B - o - t = 9 in ***Controls***

pr_{max} = 9 in

projection < D *OK*

Use minimal steel stirrups
#4 @ 48 inches o.c.

V. CHECK WALL SECTION - BENDING AND SHEAR (vertical bars)

Assumptions: 1. *Wall stem is cantilevered from anchor.*
2. *Use active earth pressure because wall can deflect at top.*
3. *Use K_a and δ from Anchor Stability Calculations.*

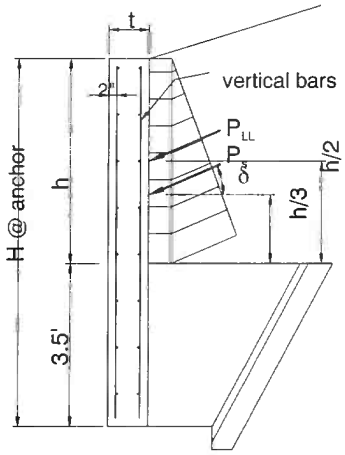

Horizontal loads:

$P_{sh} = (^1/_2)\gamma_s K_a h^2(\cos\delta)$

$P_{LLh} = \gamma_s K_a h(h_{surcharge})(\cos\delta)$

$P_{impact} = P_{imp}/L_{distr}$

Factored forces:

Load factors are per AASHTO LRFD 3.4.1-1 & Table 3.4.1-2

M_u = Section width$[(1.35)P_{sh}(h/3) + (1.75)P_{LLh}(h/2) + (1.75)P_{imp}(h+y_{imp})]$

V_u = Section width$[(1.35)P_{sh} + (1.75P_{LLh} + (1.75P_{imp}]$

Summary of forces at anchors

anchor	H (ft)	h (ft)	$h_{surcharge}$ (ft)	P_{sh} (k/ft)	P_{LLh} (k/ft)	P_{imp} (k/ft)	M_u (k-ft)	V_u (k)
1	6.51	3.01	2.00	0.16	0.18	0.00	3.64	2.79
2	0.00	0.00	2.00	0.00	0.00	0.00	0.00	0.00
3	0.00	0.00	2.00	0.00	0.00	0.00	0.00	0.00
4	0.00	0.00	2.00	0.00	0.00	0.00	0.00	0.00
5	0.00	0.00	2.00	0.00	0.00	0.00	0.00	0.00

Check bending (reinforcment) at anchors

f'_c = **5000 psi**

f_y = **60000 psi**

ϕ_b = **0.9** *(AASHTO LRFD 5.4.2.1)*

$m = f_y/0.85f'_c$ = 14.12

d = 9.75 in

b = anchor's contrib. width

$$R_u = \frac{M_u}{\phi_b b d^2}$$

$$\rho_{reqd} = \frac{1}{m}\left(1-\sqrt{1-\frac{2mR_u}{f_y}}\right)$$

ρ_{min} = *AASHTO LRFD 5.7.3.3.2 states the minimum reinforcement is the lesser of 1.2Mcr OR 1.33 times the factored moment required by strength.*

anchor	R_u (psi)	ρ_{reqd}	ρ_{cr}	ρ_{min}	$A_{s\,min}$ (in^2)	$A_{s\,actual}$ (in^2)	check
1	8	0.0001	0.0030	0.0002	0.11	1.08	OK
2	0	0.0000	0.0030	0.0000	0.00	#VALUE!	N/A
3	0	0.0000	0.0030	0.0000	0.00	#VALUE!	N/A
4	0	0.0000	0.0030	0.0000	0.00	#VALUE!	N/A
5	0	0.0000	0.0030	0.0000	0.00	#VALUE!	N/A

Check shear

$V_c = (.0316)*\beta \sqrt{f'_c}\, b_v d_v$ *(V_c calculated by AASHTO LRFD eq'n 5.8.3.3-3)*

$\phi = 0.9$ *(AASHTO LRFD 5.5.4.2.1)*

$\beta = 2$ *(AASHTO LRFD 5.8.3.4.1)*

$d_v = .9*d$ or $.72*t$ *whichever is greater (AASHTO LRFD 5.8.2.9)*

anchor	ϕV_c	check $V_u < \phi V_c$
1	70.31	*OK*
2	0.00	*N/A*
3	0.00	*N/A*
4	0.00	*N/A*
5	0.00	*N/A*

VI. CHECK TYPE 'C' ANCHOR ATTACHMENT

Check capacity of connector for pullout (truncated pyramid failure), shear, tension, and combined shear & tension

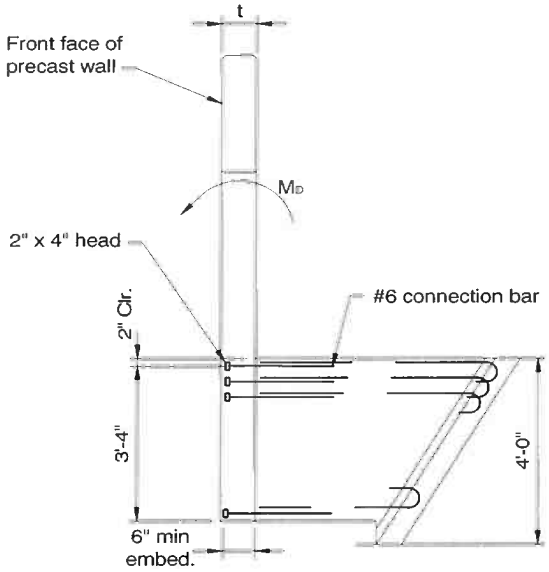

embedment depth (l_e) = **6 in**

Attachment depth = 42 in
X head dimension (Xd_{head}) = 3 in
Y head dimension (Yd_{head}) = 3 in
Bar size = **# 6**
rows = **3**
row spacing = **5 in**
wall thickness (t) = 12 in
x = Xd_{head} (*since only 1 column*) = 3 in
y = (#rows-1)(row spacing) + Yd_{head} = 13 in

z = min(x,y) = 3 in
h_{min} = (z + $2l_e$)/2 = 7.5 in
A_R = (x+$2l_e$-2d)(y+$2l_e$-2d) = -9.0 in^2

f'_c = **5000 psi**
f_y = **60000 psi**
$\phi_{concrete}$ = 0.85
ϕ_{steel} = 0.90

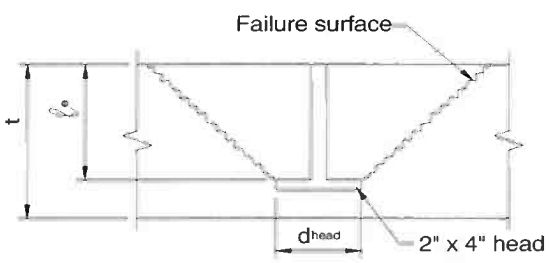

TENSION CAPACITY (Per PCI Design Handbook §6.5.2.1)

t > hmin: failure surface does not penetrate slab

Find pullout capacity of concrete

if t >= h_{min}, $\phi P_c = \phi 2.67 sqrt(f'c)(x+2l_e)(y+2l_e)$

if t < h_{min}, $\phi P_c = \phi 2.67 sqrt(f'c)[(x+2l_e)(y+2l_e) - A_R]$

ϕP_c = 60.18 K

Find tension capacity of studs

$\phi P_y = \phi f_y(A_{bar})$(#bars)

ϕP_y = 71.57 K

controlling tension capacity (ϕP) = 60.18 K

Find moment capacity of anchor

Moment capacity of anchor (ϕM_n) = $\phi P(d-a/2)$

d = attachment depth - bar cover - $(y-Yd_{head})/2$ = 35 in

a = $A_s f_y/0.85 f'_c b$ = 3.12 in

ϕM_n = 167.70 k-f

SHEAR CAPACITY (Per PCI Design Handbook §6.5.2.2)

Find shear capacity of concrete

$\phi V_c = \phi V'_c C_w C_t C_c$

$\phi V'_c = \phi 12.5 d_e^{1.5} \text{sqrt}(f'_c)$	= 187.4 K
$C_w = 1 + \text{spacing}/3.5d_e < \#\text{columns}$	= 1.0
$C_t = t/1.3d_e <= 1.0$	= 0.23
$C_c = 0.4 + 0.7d_c/de <= 1.0$	= 0.9
d_e = attachment depth - cover - bar dia/2	= 40 in
d_c = distance to side of wingwall	= 30 in

$\phi V_c = \phi V'_c C_w C_t C_c =$ 40.60 K

Find shear capacity of studs

$\phi V_y = \phi 0.9 f_y A_{bar}(\#\text{bars})$

ϕV_y = 64.41 K

controlling shear capacity (ϕV) = 40.60 K

FIND LOADS

Unfactored loads on anchors:

$M_{D(DL)}$ = (sec width)$M_{D(anchor)}$

$M_{D(LL)}$ = (sec width)($M_{D(anchor)}$ + P_{imp}*(wall ht + y_{imp}))

Factored loads:

Load factors are per AASHTO 3.22.1 & Table 3.22.1A

$M_u = (1.3)(1.3)M_{D(DL)} + (1.3)(1.67)M_{D(LL)}$

$P_u = M_u$ /(d-a/2)*cos(bar angle)

$V_u = M_u$ /(d-a/2)*sin(bar angle)

bar angle = 0°

Summary of forces

anchor	$M_{D(DL)}$ ft-k	$M_{D(LL)}$ ft-k	M_u ft-k	P_u k	V_u k
1	5.9	6.7	24.6	8.8	0.0
2	0.0	0.0	0.0	0.0	0.0
3	0.0	0.0	0.0	0.0	0.0
4	0.0	0.0	0.0	0.0	0.0
5	0.0	0.0	0.0	0.0	0.0

Summary of results

anchor	check $\phi M_n > M_u$	check $\phi P > P_u$	check $\phi V > V_u$	check combined V_c & P_c	check combined V_s & P_s
1	*OK*	*OK*	*OK*	*OK*	*OK*
2	*n/a*	*n/a*	*n/a*	*n/a*	*n/a*
3	*n/a*	*n/a*	*n/a*	*n/a*	*n/a*
4	*n/a*	*n/a*	*n/a*	*n/a*	*n/a*
5	*n/a*	*n/a*	*n/a*	*n/a*	*n/a*

Section 7
CSI Wing wall 3
Calculations

Concrete Systems Inc.
9 Commercial St., Hudson, NH,03051
Phone 603-889-4163
Fax 603-889-2417

AASHTO LRFD WINGWALL CALCULATIONS

PROJECT NUMBER: R22624 **WW 3**
PROJECT NAME: ROUTE 106 BRIDGE REPLACEMENT T. H. 61 (KENDALL ROAD)
DATE: Feb 25, 2016
BY: BK

INPUT PARAMETERS:

Wall geometry

Panel Height (high) = **6.75 ft**
Panel Height (low) = **3.56 ft**
Wall Panel Length = **5.00 ft**
Entire Wall length = **5.00 ft**
Length of flat = **1.00 ft**
wall thickness = **12**
Wingwall Drop *(high-low)* = 3.19 ft
Wall slope = 0.7975
Max fill ht. *(t/road to b/ww)* = **8.75 ft**
Fill Slope *(perp. to road)* = **1.5**
Wall angle *(perp. to road)* = **45**
Fill slope *(perp. to wall)* = 2.12
Wingwall Panel Connected to Bridge Unit= ☑ Yes

Soil properties

γ_{soil} = **140 pcf**
γ_{conc} = **150 pcf**
$\gamma_{LLsurcharge}$ = **120 pcf**
ϕ_{AB} = **32**
θ_{AB} = **0**
δ_{AB} = **24**
ϕ_{BC} = **32**
θ_{BC} = **30**
δ_{BC} = **16**

Foundation

D_{ftg} = **5.0 ft**
B_{ftg} = **2.5 ft**
o = **9 in**
Q_{soil} = **3.0 KSF**

Railing or barrier

NONE
T/WW to load = **2.00 ft**
impact load = **10.00 K**

	Distance to anchor	Overriding perp. slope @ anchor	Wall height @ anchor	Contrib. width	Perp. slope used @ anchor	h_{eq} LL surch	Anchor Type	Check 'e' & Bearing
Anchor #1	**2.50 ft**	n	5.55 ft	3.75 ft	2.12 ft	**2.00 ft**	C	*OK*
Anchor #2	**0.00 ft**	n	0.00 ft	0.00 ft	2.12 ft	**2.00 ft**	E	*N/A*
Anchor #3	**0.00 ft**	n	0.00 ft	0.00 ft	2.12 ft	**2.00 ft**	E	*N/A*
Anchor #4	**0.00 ft**	n	0.00 ft	0.00 ft	2.12 ft	**2.00 ft**	E	*N/A*
Anchor #5	**0.00 ft**	n	0.00 ft	0.00 ft	2.12 ft	**2.00 ft**	E	*N/A*

CALCULATION NOTES:

1. Wingwall calculations are done in accordance with the current edition of the *AASHTO LRFD Bridge Design Specifications*.
2. Moments are summed about the *toe (face) of the wingwall* (point "o" on attached "Pressure Diagram").
3. K_a is calculated using equation found in former AASHTO LRFD Specifications Equation 3.11.5.3-1

$$K_a = \frac{\sin^2(\phi + \theta)}{\sin^2\theta \sin(\theta - \delta)\left[1 + \sqrt{\frac{\sin(\phi + \delta)\sin(\phi - \beta)}{\sin(\theta - \delta)\sin(\theta + \beta)}}\right]^2}$$

4. Only 80% of the soil unit weight is used for the eccentricity/ stability calculation. This is a conservative assumption as explained in the full HITEC report "Evaluation of the CON/SPAN® Wingwall System"
5. The full 100% of the soil unit weight is used for the bearing calculations.
6. These calculations conservatively assume that the wall anchor has the same unit weight as soil.
7. The wingwall angle (in plan view) is measured from perpendicular to roadway.
8. Barrier loads are distributed per AASHTO LRFD Specifications Section 13

Anchor 1			
SOIL PROPERTY	DESCRIPTION	VALUE section AB	VALUE section BC
ϕ	friction angle of soil	32	32
θ	angle of wall to the y-axis	0	30
δ	wall-soil friction angle *(measured from a perpendicular with the wall)* =0, if significant vibrations of backfill or modules settling more than backfill. = 0.5*ϕ, if modules are uniform width. = 0.75*ϕ, if averaged pressure surface	24	16
x	side slopes from road (x:1)	1.5	
α	wingwall angle (angle w/ perpendicular to road)	45	
	slope of backfill (perpendicular to wall)	2.12	
β	angle of backfill (perpendicular to wall)	25.2	25.2
	$(K_a)_{AB}$ =	0.44	$(K_a)_{BC}$ = 0.16

Anchor 1

VARIABLE	DESCRIPTION OF VARIABLE	VALUE	
H	wingwall design height at anchor location (feet)	5.55	
h_{surch}	height of live load surcharge (feet)	2.00	
t	thickness of wingwall (inches)	12	
δ	wall friction angle for section AB	24	
β	angle of backfill (degrees)	25.2	
L	length of anchor (feet)	5.04	C
γ_s	unit weight of backfill (kcf)	140	
γ_c	unit weight of concrete (kcf)	150	
γ_{surch}	unit weight of surcharge (kcf)	120	*(per AASHTO LRFD 3.11.6.4)*

Description	Vertical Reaction (k/ft)	Horizontal Reaction (k/ft)	Lever Arm (ft)	Disturbing Moment (ft-k/ft)	"Stability" Resisting Moment (ft-k/ft)	"Bearing" Resisting Moment (ft-k/ft)
wall (W_w)	0.83		0.50		0.42	0.42
soil I_A	0.84		4.36		2.92	3.65
soil I_B	1.45		3.52		4.08	5.10
soil II_A	1.10		2.13		1.87	2.34
soil II_B	0.68		4.02		2.20	2.75
$W_{surcharge(vert)}$	1.21		3.52		4.26	4.26
$W_{parapet}$	0.00		0.50		0.00	0.00
Soil Pressure						
$(P_{AB})_v$	0.24		6.04		1.47	1.47
$(P_{AB})_h$		0.55	4.98	2.72		
$(P_{BC1})_v$	-0.11		4.89		-0.53	-0.53
$(P_{BC1})_h$		0.43	1.50	0.65		
$(P_{BC2})_v$	-0.05		4.50		-0.22	-0.22
$(P_{BC2})_h$		0.19	0.83	0.16		
$P_{surcharch(hor)}$		0.53	3.96	2.11		
TOTALS =	6.20	1.70		5.64	16.48	19.25

AASHTO LRFD C11.6.3.3 states: The specified criteria for the location of the resultant, coupled with investigation of the bearing pressure, replaces the investigation of the ratio of stabilizing moment to overturning moment. See Section III Soil Bearing Pressure.

II. CHECK OVERTURNING STABILITY AT CONNECTION PLATES

The connection plates provide stability for the portion of the wall not supported by the anchors, i.e., the section closest to the culvert. (See wingwall sketch)

Data:

number of plates = 2

ϕ = 32

δ = 24

γ_s = 0.140 kcf

$\gamma_{(surcharge)}$ = 0.120 kcf

wall height @ plates (H) = **6.75 ft**

Live load surcharge (h) = **2.00 ft**

section width for plates (S) = 1.3 ft

$y_{Psh} = H/3$ = 2.3 ft

$y_{PLL} = H/2$ = 3.4 ft

y_{p1} = **0.75 ft**

y_{p2} = **4.75 ft**

A_{bolt} = 0.79

t_{plate} = 1.00 in

$\phi F_{(bolt)}$ = 30 ksi

$F_{y(plate)}$ = 36 ksi

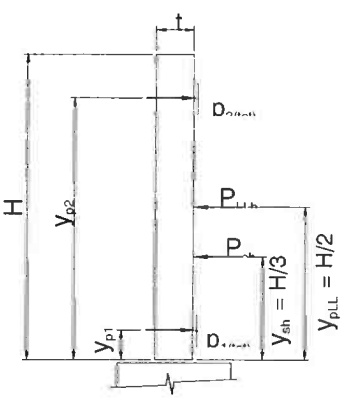

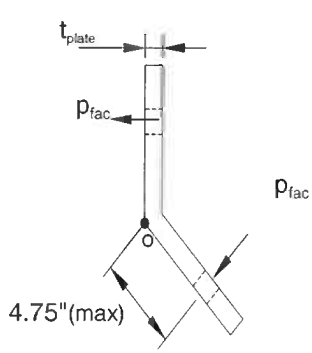

length of connection plate is 10"

Find soil pressure on section:

Because the wall is more rigid at the plates, at-rest soil pressure coefficient (K_o) is used.

$K_o = 1\text{-}\sin\phi = 0.47$ *(AASHTO LRFD eq. 3.11.5.2-1)*

$P_{sh} = (^1/_2)\gamma_s K_o H^2(S)(\cos\delta) = 1.71$ K

$P_{LLh} = K_o\gamma_s HhS(\cos\delta) = 0.87$ K

$P_{impact} = P_{imp}S/L_{distr} = 0$

Find reaction at plate:

Sum moments about bottom plate, p_1

$\Sigma M_{p1} = 0 = P_{sh}(y_{Psh} - y_{p1}) - p_2(y_{p2} - y_{p1})$ *(dead load)*

$\Sigma M_{p1} = 0 = P_{LL}(y_{PLL} - y_{p1}) - p_{2LL}(y_{p2} - y_{p1}) + P_{imp}(y_{imp} - y_{p1})$ *(live load)*

$p_2 = \dfrac{P_{sh}(y_{Psh} - y_{p1})}{(y_{p2} - y_{p1})} = 0.64$ K $\qquad p_1 = P_{sh} - p_2 = 1.07$ K

$p_{2LL} = \dfrac{P_{LLh}(y_{pLL} - y_{p1}) + P_{imp}(y_{imp} - y_{p1})}{(y_{p2} - y_{p1})} = 0.57$ K $\qquad p_{1LL} = P_{LL} + P_{imp} - p_{2LL} = 0.30$ K

Find factored reaction:

Load factors are per AASHTO LRFD 3.4.1-1 & Table 3.4.1-2

$p_{fac} = \gamma p_{max(DL)} + (1.75)p_{max(LL)}$

$p_{fac} = (1.35)p_{(DL)} + (1.75)p_{(LL)}$

$p_{1(tot,\ factored)} = 1.97$ K ***Controls***

$p_{2(tot,\ factored)} = 1.87$ K

$p_{(max,\ factored)} = 1.97$ K

Check bolts:

The special Richmond Screw Anchor *"wingwall insert" pullout capacity was obtained from the manufacturer and has approx. 3:1 safety factor.*

Pullout capacity = 16.5 k/bolt ***Controls***

Bolt tension = $\phi F A_{bolt}$ = 23.7 k/bolt

$F.S. = \dfrac{\text{Capacity* 2 bolts}}{(p_{fac})} = 16.77$ *> 1.0, OK*

Check bending of plate:

Sum moments about corner of plate, point "o"

$\Sigma M_o = (p_{fac})(4.75") = 9346$ lb-in

$I_{pl} = bh^3/12 = 0.83$ in^4

$\sigma_{max} = \dfrac{My}{I_{pl}} = 6$ ksi $< \phi F_y = 0.9F_y$ *OK*

(AISC LRFD-F2 states $\phi_b = 0.9$)

III. CHECK SOIL BEARING PRESSURE AND SLIDING UNDER CAST-IN-PLACE FOOTING

The reaction will be supported on the horizontal portion of the anchor plus the footing.

R_v = Total vertical reaction at anchor (using 100% of soil weight).
R_h = Total horizontal reaction at anchor.
M_D = Disturbing moment at anchor.
M_{Rb} = Resisting moment due to 100% of soil at anchor.

Summary of loads at anchors

anchor	anchor base length	R_v ($^K/_F$)	R_h ($^K/_F$)	M_D ($^{K\text{-}F}/_F$)	M_{Rb} ($^{K\text{-}F}/_F$)
1	2.73	6.20	1.70	5.64	19.25
2	4.73	0.00	0.00	0.00	0.00
3	4.73	0.00	0.00	0.00	0.00
4	4.73	0.00	0.00	0.00	0.00
5	4.73	0.00	0.00	0.00	0.00

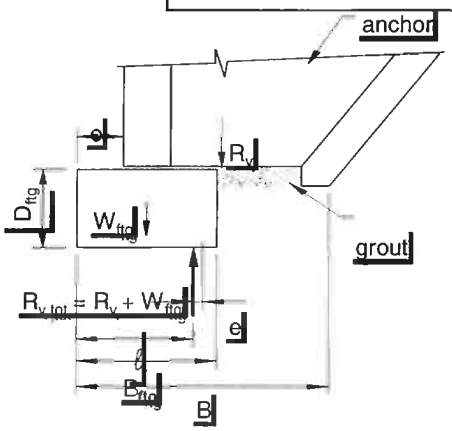

Check the bearing pressure under the wall

D_{ftg} = 5.0 ft
B_{ftg} = 2.5 ft
o = 9 in
W_{ftg} = 1.88 klf

Q_{allow} = 3.0 KSF

$R_{v,tot}$ = total vertical reaction ($R_v + W_{ftg}$)
B = bearing width
= maximum of (anchor base length + o) or B_{ftg}
ℓ = location of vertical resultant ($R_{v,tot}$) along bearing width

$$= \frac{R_v((M_{Rb}-M_D)/R_v + o) + W_{ftg}(B/2)}{R_{v,tot}}$$

e = eccentricity of resultant
= B/2 - ℓ
B' = adjusted bearing width
= B - 2e
q = bearing pressure *(must be less than Q_{allow})*
= $R_{v,tot}$ / B'

Check bearing pressure at each anchor

anchor	B (ft)	ℓ (ft)	e	check e	B' (ft)	q	check q
1	4.48	2.55	-0.31	*OK*	3.86	2.09	*OK*
2	0.00	0.00	0.00	*n/a*	0.00	0.00	*n/a*
3	0.00	0.00	0.00	*n/a*	0.00	0.00	*n/a*
4	0.00	0.00	0.00	*n/a*	0.00	0.00	*n/a*
5	0.00	0.00	0.00	*n/a*	0.00	0.00	*n/a*

Check the sliding factor of safety

$H_R = \phi * R_{V,tot} * .8 * \tan \phi$ *(AASHTO LRFD 10.6.3.4)*

(must be >R_h)

ϕ = 0.9 *from AASHTO LRFD Table 10.5.5.2.2-1 for precast concrete on sand*

Check sliding at each anchor

anchor	$R_{v,tot}$ (k/f)	R_R (k/f)	R_h	check $R_R > R_h$
1	8.08	3.64	1.70	*OK*
2	0.00	0.00	0.02	*n/a*
3	0.00	0.00	0.02	*n/a*
4	0.00	0.00	0.02	*n/a*
5	0.00	0.00	0.02	*n/a*

IV. CHECK BENDING OF FOOTING CROSS SECTION

Bending need not be considered in footings when the footing depth, D, exceeds the projection, pr, of the footing beyond the edge of the wall.

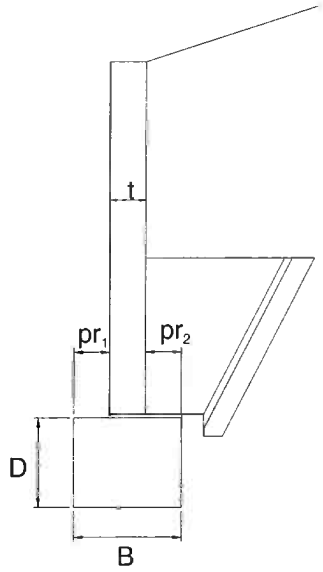

pr_1 = offset(o) = 9 in

pr_2 = B - o - t = 9 in ***Controls***

pr_{max} = 9 in

projection < D *OK*

Use minimal steel stirrups
#4 @ 48 inches o.c.

V. CHECK WALL SECTION - BENDING AND SHEAR (vertical bars)

Assumptions: *1. Wall stem is cantilevered from anchor.*
2. Use active earth pressure because wall can deflect at top.
3. Use K_a and δ from Anchor Stability Calculations.

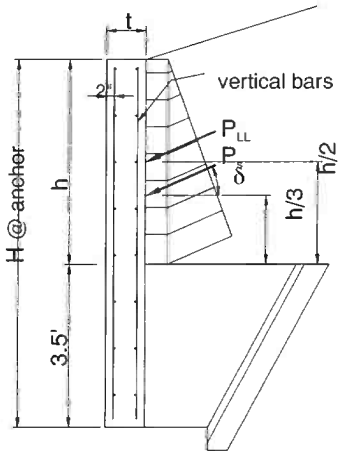

Horizontal loads:

$P_{sh} = (^1/_2)\gamma_s K_a h^2(\cos\delta)$

$P_{LLh} = \gamma_s K_a h(h_{surcharge})(\cos\delta)$

$P_{impact} = P_{imp}/L_{distr}$

Factored forces:

Load factors are per AASHTO LRFD 3.4.1-1 & Table 3.4.1-2

M_u = Section width$[(1.35)P_{sh}(h/3) + (1.75)P_{LLh}(h/2) + (1.75)P_{imp}(h+y_{imp})]$

V_u = Section width$[(1.35)P_{sh} + (1.75P_{LLh} + (1.75P_{imp}]$

Summary of forces at anchors

anchor	H (ft)	h (ft)	$h_{surcharge}$ (ft)	P_{sh} (k/ft)	P_{LLh} (k/ft)	P_{imp} (k/ft)	M_u (k-ft)	V_u (k)
1	5.55	2.05	2.00	0.12	0.20	0.00	1.73	1.88
2	0.00	0.00	2.00	0.00	0.00	0.00	0.00	0.00
3	0.00	0.00	2.00	0.00	0.00	0.00	0.00	0.00
4	0.00	0.00	2.00	0.00	0.00	0.00	0.00	0.00
5	0.00	0.00	2.00	0.00	0.00	0.00	0.00	0.00

Check bending (reinforcment) at anchors

f'_c = **5000 psi**

f_y = **60000 psi**

ϕ_b = **0.9** *(AASHTO LRFD 5.4.2.1)*

$m = f_y/0.85f'_c$ = 14.12

d = 9.75 in

b = anchor's contrib. width

$$R_u = \frac{M_u}{\phi_b b d^2}$$

$$\rho_{reqd} = \frac{1}{m}\left(1 - \sqrt{1 - \frac{2mR_u}{f_y}}\right)$$

ρ_{min} = *AASHTO LRFD 5.7.3.3.2 states the minimum reinforcement is the lesser of 1.2Mcr OR 1.33 times the factored moment required by strength.*

anchor	R_u (psi)	ρ_{reqd}	ρ_{cr}	ρ_{min}	$A_{s\ min}$ (in^2)	$A_{s\ actual}$ (in^2)	check
1	5	0.0001	0.0030	0.0001	0.05	0.88	OK
2	0	0.0000	0.0030	0.0000	0.00	#VALUE!	N/A
3	0	0.0000	0.0030	0.0000	0.00	#VALUE!	N/A
4	0	0.0000	0.0030	0.0000	0.00	#VALUE!	N/A
5	0	0.0000	0.0030	0.0000	0.00	#VALUE!	N/A

Check shear

$V_c = (.0316)*\beta \sqrt{f'_c}\, b_v d_v$ *(V_c calculated by AASHTO LRFD eq'n 5.8.3.3-3)*

$\phi = 0.9$ *(AASHTO LRFD 5.5.4.2.1)*

$\beta = 2$ *(AASHTO LRFD 5.8.3.4.1)*

$d_v = .9*d$ or $.72*t$ *whichever is greater (AASHTO LRFD 5.8.2.9)*

anchor	ϕV_c	check $V_u < \phi V_c$
1	50.22	*OK*
2	0.00	*N/A*
3	0.00	*N/A*
4	0.00	*N/A*
5	0.00	*N/A*

VI. CHECK TYPE 'C' ANCHOR ATTACHMENT

Check capacity of connector for pullout (truncated pyramid failure), shear, tension, and combined shear & tension

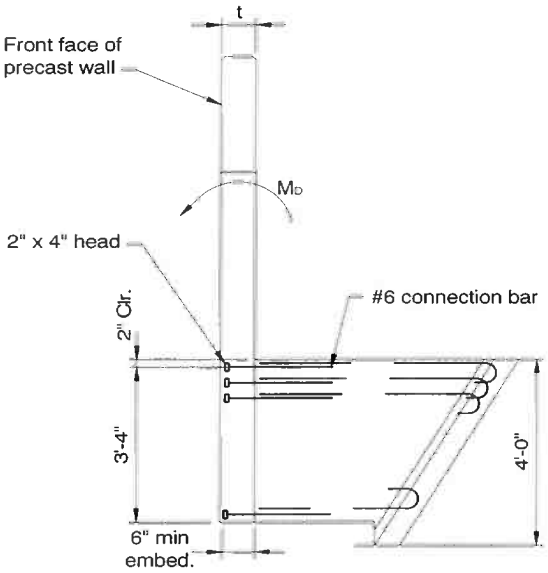

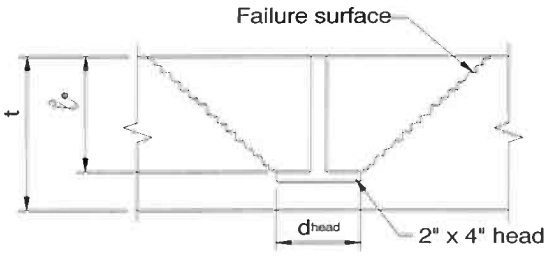

embedment depth (l_e) = **6 in**

Attachment depth = 42 in
X head dimension (Xd_{head}) = 3 in
Y head dimension (Yd_{head}) = 3 in
Bar size = **# 6**
rows = **3**
row spacing = **5 in**
wall thickness (t) = 12 in
x = Xd_{head} (*since only 1 column*) = 3 in
y = (#rows-1)(row spacing) + Yd_{head} = 13 in
z = min(x,y) = 3 in
h_{min} = (z + $2l_e$)/2 = 7.5 in
A_R = (x+$2l_e$-2t)(y+$2l_e$-2t) = -9.0 in^2

f'_c = **5000 psi**
f_y = **60000 psi**
$\phi_{concrete}$ = 0.85
ϕ_{steel} = 0.90

TENSION CAPACITY (Per PCI Design Handbook §6.5.2.1)

t > hmin: failure surface does not penetrate slab

Find pullout capacity of concrete

if t >= h_{min}, $\phi P_c = \phi 2.67 sqrt(f'c)(x+2l_e)(y+2l_e)$

if t < h_{min}, $\phi P_c = \phi 2.67 sqrt(f'c)[(x+2l_e)(y+2l_e) - A_R]$

ϕP_c = 60.18 K

Find tension capacity of studs

$\phi P_y = \phi f_y(A_{bar})(\#bars)$

ϕP_y = 71.57 K

controlling tension capacity (ϕP) = 60.18 K

Find moment capacity of anchor

Moment capacity of anchor (ϕM_n) = $\phi P(d-a/2)$

d = attachment depth - bar cover - $(y-Yd_{head})/2$ = 35 in

a = $A_s f_y/0.85 f'_c b$ = 3.12 in

ϕM_n = 167.70 k-f

SHEAR CAPACITY (Per PCI Design Handbook §6.5.2.2)

Find shear capacity of concrete

$\phi V_c = \phi V'_c C_w C_t C_c$

$\phi V'_c = \phi 12.5 d_e^{1.5} \text{sqrt}(f'_c)$	= 187.4 K
$C_w = 1 + \text{spacing}/3.5d_e < \#\text{columns}$	= 1.0
$C_t = t/1.3d_e <= 1.0$	= 0.23
$C_c = 0.4 + 0.7d_c/de <= 1.0$	= 0.9
d_e = attachment depth - cover - bar dia/2	= 40 in
d_c = distance to side of wingwall	= 30 in

$\phi V_c = \phi V'_c C_w C_t C_c =$ 40.60 K

Find shear capacity of studs

$\phi V_y = \phi 0.9 f_y A_{bar}(\#\text{bars})$

ϕV_y = 64.41 K

controlling shear capacity (ϕV) = 40.60 K

FIND LOADS

Unfactored loads on anchors:

$M_{D(DL)}$ = (sec width)$M_{D(anchor)}$

$M_{D(LL)}$ = (sec width)($M_{D(anchor)}$ + P_{imp}*(wall ht + y_{imp}))

Factored loads:

Load factors are per AASHTO 3.22.1 & Table 3.22.1A

$M_u = (1.3)(1.3)M_{D(DL)} + (1.3)(1.67)M_{D(LL)}$

$P_u = M_u$ /(d-a/2)*cos(bar angle)

$V_u = M_u$ /(d-a/2)*sin(bar angle)

bar angle = 0°

Summary of forces

anchor	$M_{D(DL)}$ ft-k	$M_{D(LL)}$ ft-k	M_u ft-k	P_u k	V_u k
1	13.2	7.9	39.5	14.2	0.0
2	0.0	0.0	0.0	0.0	0.0
3	0.0	0.0	0.0	0.0	0.0
4	0.0	0.0	0.0	0.0	0.0
5	0.0	0.0	0.0	0.0	0.0

Summary of results

anchor	check $\phi M_n > M_u$	check $\phi P > P_u$	check $\phi V > V_u$	check combined V_c & P_c	check combined V_s & P_s
1	*OK*	*OK*	*OK*	*OK*	*OK*
2	*n/a*	*n/a*	*n/a*	*n/a*	*n/a*
3	*n/a*	*n/a*	*n/a*	*n/a*	*n/a*
4	*n/a*	*n/a*	*n/a*	*n/a*	*n/a*
5	*n/a*	*n/a*	*n/a*	*n/a*	*n/a*

Section 8
CSI Wing wall 4
Calculations

Concrete Systems Inc.
9 Commercial St., Hudson, NH,03051
Phone 603-889-4163
Fax 603-889-2417

AASHTO LRFD WINGWALL CALCULATIONS

PROJECT NUMBER: R22624 **WW 4**
PROJECT NAME: ROUTE 106 BRIDGE REPLACEMENT T. H. 61 (KENDALL ROAD)
DATE: Feb 25, 2016
BY: BK

INPUT PARAMETERS:

Wall geometry

Panel Height (high) = **7.58 ft**
Panel Height (low) = **7.16 ft**
Wall Panel Length = **16.50 ft**
Entire Wall length = **16.50 ft**
Length of flat = **1.00 ft**
wall thickness = **12**
Wingwall Drop *(high-low)* = 0.42 ft
Wall slope = 0.0271
Max fill ht. *(t/road to b/ww)* = **9.58 ft**
Fill Slope *(perp. to road)* = **1.5**
Wall angle *(perp. to road)* = **41**
Fill slope *(perp. to wall)* = 2.29
Wingwall Panel Connected to Bridge Unit= ☑ Yes

Soil properties

γ_{soil} = **140 pcf**
γ_{conc} = **150 pcf**
$\gamma_{LLsurcharge}$ = **120 pcf**
ϕ_{AB} = **32**
θ_{AB} = **0**
δ_{AB} = **24**
ϕ_{BC} = **32**
θ_{BC} = **30**
δ_{BC} = **16**

Foundation

D_{ftg} = **5.0 ft**
B_{ftg} = **2.5 ft**
o = **9 in**
Q_{soil} = **3.0 KSF**

Railing or barrier

NONE
T/WW to load = **2.00 ft**
impact load = **10.00 K**

	Distance to anchor	Overriding perp. slope @ anchor	Wall height @ anchor	Contrib. width	Perp. slope used @ anchor	h_{eq} LL surch	Anchor Type	Check 'e' & Bearing
Anchor #1	**2.50 ft**	n	7.23 ft	5.00 ft	3.07 ft	**2.00 ft**	C	OK
Anchor #2	**7.50 ft**	n	7.36 ft	5.00 ft	3.32 ft	**2.00 ft**	C	OK
Anchor #3	**12.50 ft**	n	7.50 ft	4.50 ft	3.60 ft	**2.00 ft**	C	OK
Anchor #4	**0.00 ft**	n	0.00 ft	0.00 ft	2.29 ft	**2.00 ft**	B	N/A
Anchor #5	**0.00 ft**	n	0.00 ft	0.00 ft	2.29 ft	**2.00 ft**	E	N/A

CALCULATION NOTES:

1. Wingwall calculations are done in accordance with the current edition of the *AASHTO LRFD Bridge Design Specifications* .
2. Moments are summed about the *toe (face) of the wingwall* (point "o" on attached "Pressure Diagram").
3. K_a is calculated using equation found in former AASHTO LRFD Specifications Equation 3.11.5.3-1

$$K_a = \frac{\sin^2(\phi + \theta)}{\sin^2\theta \sin(\theta - \delta)\left[1 + \sqrt{\frac{\sin(\phi + \delta)\sin(\phi - \beta)}{\sin(\theta - \delta)\sin(\theta + \beta)}}\right]^2}$$

4. Only 80% of the soil unit weight is used for the eccentricity/ stability calculation. This is a conservative assumption as explained in the full HITEC report "Evaluation of the CON/SPAN® Wingwall System"
5. The full 100% of the soil unit weight is used for the bearing calculations.
6. These calculations conservatively assume that the wall anchor has the same unit weight as soil.
7. The wingwall angle (in plan view) is measured from perpendicular to roadway.
8. Barrier loads are distributed per AASHTO LRFD Specifications Section 13

Anchor 1			
SOIL PROPERTY	**DESCRIPTION**	**VALUE section AB**	**VALUE section BC**
ϕ	friction angle of soil	32	32
θ	angle of wall to the y-axis	0	30
δ	wall-soil friction angle *(measured from a perpendicular with the wall)* =0, if significant vibrations of backfill or modules settling more than backfill. = 0.5*ϕ, if modules are uniform width. = 0.75*ϕ, if averaged pressure surface	24	16
x	side slopes from road (x:1)	1.5	
α	wingwall angle (angle w/ perpendicular to road)	41	
	slope of backfill (perpendicular to wall)	3.07	
β	angle of backfill (perpendicular to wall)	18.0	18.0
	$(K_a)_{AB}$ =	0.36	$(K_a)_{BC}$ = 0.13

Anchor 1

VARIABLE	DESCRIPTION OF VARIABLE	VALUE	
H	wingwall design height at anchor location (feet)	7.23	
h_{surch}	height of live load surcharge (feet)	2.00	
t	thickness of wingwall (inches)	12	
δ	wall friction angle for section AB	24	
β	angle of backfill (degrees)	18.0	
L	length of anchor (feet)	5.04	C
γ_s	unit weight of backfill (kcf)	140	
γ_c	unit weight of concrete (kcf)	150	
γ_{surch}	unit weight of surcharge (kcf)	120	*(per AASHTO LRFD 3.11.6.4)*

Description	Vertical Reaction (k/ft)	Horizontal Reaction (k/ft)	Lever Arm (ft)	Disturbing Moment (ft-k/ft)	"Stability" Resisting Moment (ft-k/ft)	"Bearing" Resisting Moment (ft-k/ft)
wall (W_w)	1.08		0.50		0.54	0.54
soil I_A	0.58		4.36		2.02	2.52
soil I_B	2.63		3.52		7.41	9.26
soil II_A	1.10		2.13		1.87	2.34
soil II_B	0.68		4.02		2.20	2.75
$W_{surcharge(vert)}$	1.21		3.52		4.26	4.26
$W_{parapet}$	0.00		0.50		0.00	0.00
Soil Pressure						
$(P_{AB})_v$	0.29		6.04		1.78	1.78
$(P_{AB})_h$		0.66	5.29	3.50		
$(P_{BC1})_v$	-0.11		4.89		-0.53	-0.53
$(P_{BC1})_h$		0.44	1.50	0.66		
$(P_{BC2})_v$	-0.04		4.50		-0.18	-0.18
$(P_{BC2})_h$		0.16	0.83	0.14		
$P_{surcharch(hor)}$		0.57	4.43	2.53		
TOTALS =	7.43	1.83		6.82	19.36	22.74

AASHTO LRFD C11.6.3.3 states: The specified criteria for the location of the resultant, coupled with investigation of the bearing pressure, replaces the investigation of the ratio of stabilizing moment to overturning moment. See Section III Soil Bearing Pressure.

Anchor 2			
SOIL PROPERTY	**DESCRIPTION**	**VALUE section AB**	**VALUE section BC**
ϕ	friction angle of soil	32	32
θ	angle of wall to the y-axis	0	30
δ	wall-soil friction angle *(measured from a perpendicular with the wall)* =0, if significant vibrations of backfill or moc settling more than backfill. = 0.5*ϕ, if modules are uniform width. = 0.75*ϕ, if averaged pressure surface	24	16
x	side slopes from road (x:1)	1.5	
α	wingwall angle (angle w/ perpendicular to road)	41	
	slope of backfill (perpendicular to wall)	3.32	
β	angle of backfill (perpendicular to wall)	16.8	18.0
	$(K_a)_{AB}$ =	0.35	$(K_a)_{BC}$ = 0.13

Anchor 2

VARIABLE	DESCRIPTION OF VARIABLE	VALUE	
H	wingwall design height at anchor location (feet)	7.36	
h_{surch}	height of live load surcharge (feet)	2.00	
t	thickness of wingwall (inches)	12	
δ	wall friction angle for section AB	24	
β	angle of backfill (degrees)	16.8	
L	length of anchor (feet)	5.04	C
γ_s	unit weight of backfill (kcf)	140	
γ_c	unit weight of concrete (kcf)	150	
γ_{surch}	unit weight of surcharge (kcf)	120	*(per AASHTO LRFD 3.11.6.4)*

Description	Vertical Reaction (k/ft)	Horizontal Reaction (k/ft)	Lever Arm (ft)	Disturbing Moment (ft-k/ft)	"Stability" Resisting Moment (ft-k/ft)	"Bearing" Resisting Moment (ft-k/ft)
wall (W_w)	1.10		0.50		0.55	0.55
soil I_A	0.54		4.36		1.87	2.33
soil I_B	2.73		3.52		7.68	9.60
soil II_A	1.10		2.13		1.87	2.34
soil II_B	0.68		4.02		2.20	2.75
$W_{surcharge}$	1.21		3.52		4.26	4.26
$W_{parapet}$	0.00		0.50		0.00	0.00
Soil Pressure						
$(P_{AB})_v$	0.29		6.04		1.74	1.74
$(P_{AB})_h$		0.65	5.29	3.43		
$(P_{BC1})_v$	-0.11		4.88		-0.52	-0.52
$(P_{BC1})_h$		0.43	1.50	0.64		
$(P_{BC2})_v$	-0.04		4.88		-0.19	-0.19
$(P_{BC2})_h$		0.16	0.83	0.13		
P_{surch}		0.57	4.44	2.51		
TOTALS =	7.50	1.80		6.72	19.45	22.86

AASHTO LRFD C11.6.3.3 states: The specified criteria for the location of the resultant, coupled with investigation of the bearing pressure, replaces the investigation of the ratio of stabilizing moment to overturning moment. See Section III Soil Bearing Pressure.

Anchor 3			
SOIL PROPERTY	**DESCRIPTION**	**VALUE section AB**	**VALUE section BC**
ϕ	friction angle of soil	32	32
θ	angle of wall to the y-axis	0	30
δ	wall-soil friction angle *(measured from a perpendicular with the wall)* =0, if significant vibrations of backfill or mod settling more than backfill. = 0.5*ϕ, if modules are uniform width. = 0.75*ϕ, if averaged pressure surface	24	16
x	side slopes from road (x:1)	1.5	
α	wingwall angle (angle w/ perpendicular to road)	41	
	slope of backfill (perpendicular to wall)	3.60	
β	angle of backfill (perpendicular to wall)	15.5	15.5
	$(K_a)_{AB}$ =	0.34	$(K_a)_{BC}$ = 0.12

Anchor 3

VARIABLE	DESCRIPTION OF VARIABLE	VALUE	
H	wingwall design height at anchor location (feet)	7.50	
h_{surch}	height of live load surcharge (feet)	2.00	
t	thickness of wingwall (inches)	12	
δ	wall friction angle for section AB	24	
β	angle of backfill (degrees)	15.5	
L	length of anchor (feet)	5.04	C
γ_s	unit weight of backfill (kcf)	140	
γ_c	unit weight of concrete (kcf)	150	
γ_{surch}	unit weight of surcharge (kcf)	120	*(per AASHTO LRFD 3.11.6.4)*

Description	Vertical Reaction (k/ft)	Horizontal Reaction (k/ft)	Lever Arm (ft)	Disturbing Moment (ft-k/ft)	"Stability" Resisting Moment (ft-k/ft)	"Bearing" Resisting Moment (ft-k/ft)
wall (W_w)	1.12		0.50		0.56	0.56
soil I_A	0.49		4.36		1.72	2.15
soil I_B	2.82		3.52		7.95	9.93
soil II_A	1.10		2.13		1.87	2.34
soil II_B	0.68		4.02		2.20	2.75
$W_{surcharge}$	1.21		3.52		4.26	4.26
$W_{parapet}$	0.00		0.50		0.00	0.00
Soil Pressure						
$(P_{AB})_v$	0.28		6.04		1.71	1.71
$(P_{AB})_h$		0.64	5.30	3.38		
$(P_{BC1})_v$	-0.11		4.88		-0.51	-0.51
$(P_{BC1})_h$		0.42	1.50	0.63		
$(P_{BC2})_v$	-0.04		4.88		-0.19	-0.19
$(P_{BC2})_h$		0.16	0.83	0.13		
P_{surch}		0.56	4.45	2.50		
TOTALS =	7.57	1.78		6.64	19.57	23.00

AASHTO LRFD C11.6.3.3 states: The specified criteria for the location of the resultant, coupled with investigation of the bearing pressure, replaces the investigation of the ratio of stabilizing moment to overturning moment. See Section III Soil Bearing Pressure.

II. CHECK OVERTURNING STABILITY AT CONNECTION PLATES

The connection plates provide stability for the portion of the wall not supported by the anchors, i.e., the section closest to the culvert. (See wingwall sketch)

Data:

number of plates = 2

ϕ = 32

δ = 24

γ_s = 0.140 kcf

$\gamma_{(surcharge)}$ = 0.120 kcf

wall height @ plates (H) = **7.58 ft**

Live load surcharge (h) = **2.00 ft**

section width for plates (S) = 2.0 ft

y_{Psh} = H/3 = 2.5 ft

y_{PLL} = H/2 = 3.8 ft

y_{p1} = **0.75 ft**

y_{p2} = **4.75 ft**

A_{bolt} = 0.79

t_{plate} = 1.00 in

$\phi F_{(bolt)}$ = 30 ksi

$F_{y(plate)}$ = 36 ksi

Find soil pressure on section:

Because the wall is more rigid at the plates, at-rest soil pressure coefficient (K_o) is used.

$K_o = 1\text{-}\sin\phi = 0.47$ *(AASHTO LRFD eq. 3.11.5.2-1)*

$P_{sh} = (^1/_2)\gamma_s K_o H^2(S)(\cos\delta) = 3.45$ K

$P_{LLh} = K_o\gamma_s HhS(\cos\delta) = 1.56$ K

$P_{impact} = P_{imp}S/L_{distr} = 0$

Find reaction at plate:

Sum moments about bottom plate, p_1

$\Sigma M_{p1} = 0 = P_{sh}(y_{Psh} - y_{p1}) - p_2(y_{p2} - y_{p1})$ *(dead load)*

$\Sigma M_{p1} = 0 = P_{LL}(y_{PLL} - y_{p1}) - p_{2LL}(y_{p2} - y_{p1}) + P_{imp}(y_{imp} - y_{p1})$ *(live load)*

$p_2 = \dfrac{P_{sh}(y_{Psh} - y_{p1})}{(y_{p2} - y_{p1})} = 1.53$ K $\qquad p_1 = P_{sh} - p_2 = 1.92$ K

$p_{2LL} = \dfrac{P_{LLh}(y_{pLL} - y_{p1}) + P_{imp}(y_{imp} - y_{p1})}{(y_{p2} - y_{p1})} = 1.19$ K $\qquad p_{1LL} = P_{LL} + P_{imp} - p_{2LL} = 0.37$ K

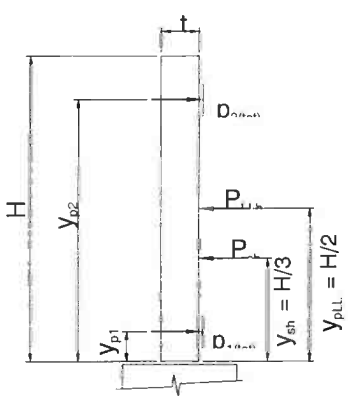

Find factored reaction:

Load factors are per AASHTO LRFD 3.4.1-1 & Table 3.4.1-2

$p_{fac} = \gamma p_{max(DL)} + (1.75)p_{max(LL)}$

$p_{fac} = (1.35)p_{(DL)} + (1.75)p_{(LL)}$

$p_{1(tot,\ factored)} = 3.25$ K

$p_{2(tot,\ factored)} = 4.15$ K ***Controls***

$p_{(max,\ factored)} = 4.15$ K

Check bolts:

The special Richmond Screw Anchor *"wingwall insert" pullout capacity was obtained from the manufacturer and has approx. 3:1 safety factor.*

Pullout capacity = 16.5 k/bolt ***Controls***

Bolt tension = $\phi F A_{bolt}$ = 23.7 k/bolt

$F.S. = \dfrac{\text{Capacity* 2 bolts}}{(p_{fac})} = 7.95$ *> 1.0, OK*

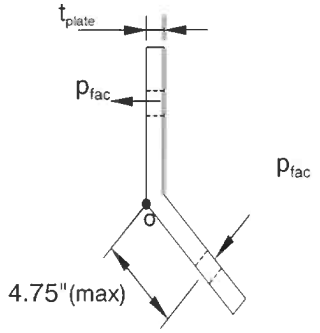

Check bending of plate:

Sum moments about corner of plate, point "o"

$\Sigma M_o = (p_{fac})(4.75") = 19710$ lb-in

$I_{pl} = bh^3/12 = 0.83$ in^4

$\sigma_{max} = \dfrac{My}{I_{pl}} = 12$ ksi $< \phi F_y = 0.9F_y$ *OK*

(AISC LRFD-F2 states $\phi_b = 0.9$)

length of connection plate is 10"

III. CHECK SOIL BEARING PRESSURE AND SLIDING UNDER CAST-IN-PLACE FOOTING

The reaction will be supported on the horizontal portion of the anchor plus the footing.

R_v = Total vertical reaction at anchor (using 100% of soil weight).

R_h = Total horizontal reaction at anchor.

M_D = Disturbing moment at anchor.

M_{Rb} = Resisting moment due to 100% of soil at anchor.

Summary of loads at anchors

anchor	anchor base length	R_v ($^K/_F$)	R_h ($^K/_F$)	M_D ($^{K\text{-}F}/_F$)	M_{Rb} ($^{K\text{-}F}/_F$)
1	2.73	7.43	1.83	6.82	22.74
2	2.73	7.50	1.80	6.72	22.86
3	2.73	7.57	1.78	6.64	23.00
4	1.73	0.00	0.00	0.00	0.00
5	4.73	0.00	0.00	0.00	0.00

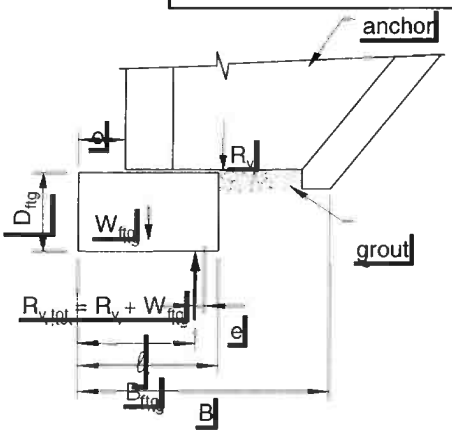

Check the bearing pressure under the wall

D_{ftg} = 5.0 ft

B_{ftg} = 2.5 ft

o = 9 in

W_{ftg} = 1.88 klf

Q_{allow} = 3.0 KSF

$R_{v,tot}$ = total vertical reaction ($R_v + W_{ftg}$)

B = bearing width

= maximum of (anchor base length + o) or B_{ftg}

ℓ = location of vertical resultant ($R_{v,tot}$) along bearing width

$$= \frac{R_v((M_{Rb}-M_D)/R_v + o) + W_{ftg}(B/2)}{R_{v,tot}}$$

e = eccentricity of resultant

= B/2 - ℓ

B' = adjusted bearing width

= B - 2e

q = bearing pressure *(must be less than Q_{allow})*

= $R_{v,tot}$ / B'

Check bearing pressure at each anchor

anchor	B (ft)	ℓ (ft)	e	check e	B' (ft)	q	check q
1	4.48	2.56	-0.32	*OK*	3.84	2.42	*OK*
2	4.48	2.57	-0.33	*OK*	3.82	2.46	*OK*
3	4.48	2.58	-0.34	*OK*	3.80	2.49	*OK*
4	0.00	0.00	0.00	*n/a*	0.00	0.00	*n/a*
5	0.00	0.00	0.00	*n/a*	0.00	0.00	*n/a*

Check the sliding factor of safety

$R_R = \phi * R_{V,tot} * .8 * \tan \phi$ *(AASHTO LRFD 10.6.3.4)*

(must be $> R_h$)

$\phi =$ 0.9 *from AASHTO LRFD Table 10.5.5.2.2-1 for precast concrete on sand*

Check sliding at each anchor

anchor	$R_{v,tot}$ (k/f)	R_R (k/f)	R_h	check $R_R > R_h$
1	9.31	4.19	1.83	*OK*
2	9.38	4.22	1.80	*OK*
3	9.45	4.25	1.78	*OK*
4	0.00	0.00	0.02	*n/a*
5	0.00	0.00	0.02	*n/a*

IV. CHECK BENDING OF FOOTING CROSS SECTION

Bending need not be considered in footings when the footing depth, D, exceeds the projection, pr, of the footing beyond the edge of the wall.

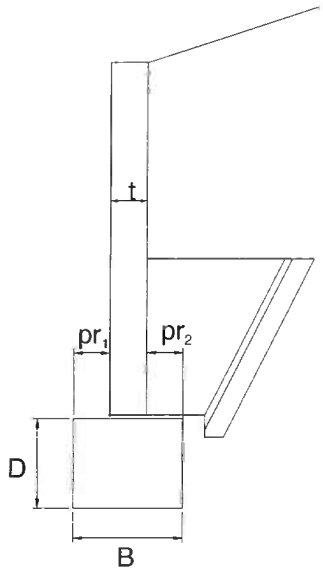

pr_1 = offset(o) = 9 in

pr_2 = B - o - t = 9 in **Controls**

pr_{max} = 9 in

projection < D *OK*

Use minimal steel stirrups
#4 @ 48 inches o.c.

V. CHECK WALL SECTION - BENDING AND SHEAR (vertical bars)

Assumptions: 1. *Wall stem is cantilevered from anchor.*
2. *Use active earth pressure because wall can deflect at top.*
3. *Use K_a and δ from Anchor Stability Calculations.*

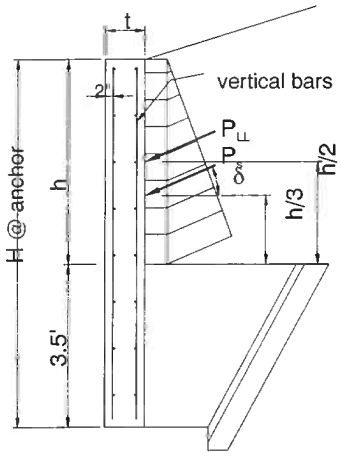

Horizontal loads:

$P_{sh} = (^1/_2)\gamma_s K_a h^2(\cos\delta)$

$P_{LLh} = \gamma_s K_a h(h_{surcharge})(\cos\delta)$

$P_{impact} = P_{imp}/L_{distr}$

Factored forces:

Load factors are per AASHTO LRFD 3.4.1-1 & Table 3.4.1-2

M_u = Section width$[(1.35)P_{sh}(h/3) + (1.75)P_{LLh}(h/2) + (1.75)P_{imp}(h+y_{imp})]$

V_u = Section width$[(1.35)P_{sh} + (1.75P_{LLh} + (1.75P_{imp}]$

Summary of forces at anchors

anchor	H (ft)	h (ft)	$h_{surcharge}$ (ft)	P_{sh} (k/ft)	P_{LLh} (k/ft)	P_{imp} (k/ft)	M_u (k-ft)	V_u (k)
1	7.23	3.73	2.00	0.32	0.29	0.00	7.47	4.73
2	7.36	3.86	2.00	0.33	0.30	0.00	7.92	4.85
3	7.50	4.00	2.00	0.35	0.30	0.00	7.55	4.49
4	0.00	0.00	2.00	0.00	0.00	0.00	0.00	0.00
5	0.00	0.00	2.00	0.00	0.00	0.00	0.00	0.00

Check bending (reinforcment) at anchors

f'_c = **5000 psi**

f_y = **60000 psi**

ϕ_b = **0.9** *(AASHTO LRFD 5.4.2.1)*

$m = f_y/0.85f'_c$ = 14.12

d = 9.75 in

b = anchor's contrib. width

$$R_u = \frac{M_u}{\phi_b b d^2}$$

$$\rho_{reqd} = \frac{1}{m}\left(1-\sqrt{1-\frac{2mR_u}{f_y}}\right)$$

ρ_{min} = *AASHTO LRFD 5.7.3.3.2 states the minimum reinforcement is the lesser of 1.2Mcr OR 1.33 times the factored moment required by strength.*

anchor	R_u (psi)	ρ_{reqd}	ρ_{cr}	ρ_{min}	$A_{s\,min}$ (in^2)	$A_{s\,actual}$ (in^2)	check
1	17	0.0003	0.0030	0.0004	0.22	1.04	OK
2	19	0.0003	0.0030	0.0004	0.24	1.04	OK
3	20	0.0003	0.0030	0.0004	0.22	0.98	OK
4	0	0.0000	0.0030	0.0000	0.00	#VALUE!	N/A
5	0	0.0000	0.0030	0.0000	0.00	#VALUE!	N/A

Check shear

$V_c = (.0316)*\beta \sqrt{f'_c}\, b_v d_v$ *(V_c calculated by AASHTO LRFD eq'n 5.8.3.3-3)*

$\phi = 0.9$ *(AASHTO LRFD 5.5.4.2.1)*

$\beta = 2$ *(AASHTO LRFD 5.8.3.4.1)*

$d_v = .9*d$ or $.72*t$ *whichever is greater (AASHTO LRFD 5.8.2.9)*

anchor	ϕV_c	check $V_u < \phi V_c$
1	66.96	*OK*
2	66.96	*OK*
3	60.27	*OK*
4	0.00	*N/A*
5	0.00	*N/A*

VI. CHECK TYPE 'C' ANCHOR ATTACHMENT

Check capacity of connector for pullout (truncated pyramid failure), shear, tension, and combined shear & tension

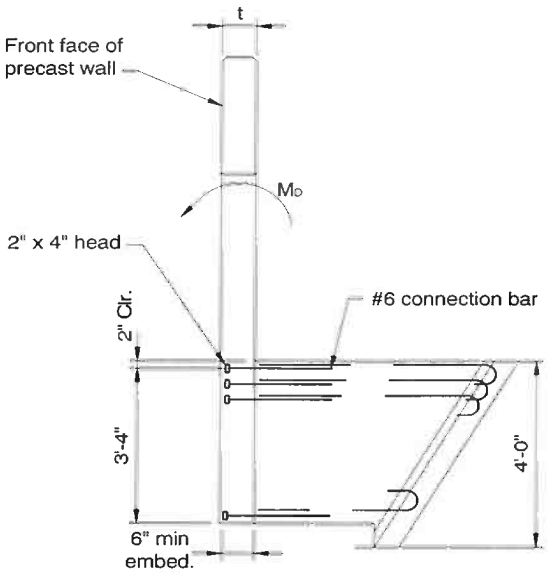

embedment depth (l_e) = **6 in**

Attachment depth = 42 in
X head dimension (Xd_{head}) = 3 in
Y head dimension (Yd_{head}) = 3 in
Bar size = **# 6**
rows = **3**
row spacing = **5 in**
wall thickness (t) = 12 in
x = Xd_{head} (*since only 1 column*) = 3 in
y = (#rows-1)(row spacing) + Yd_{head} = 13 in
z = min(x,y) = 3 in
h_{min} = (z + $2l_e$)/2 = 7.5 in
A_R = (x+$2l_e$-2d)(y+$2l_e$-2d) = -9.0 in^2

f'_c = **5000 psi**
f_y = **60000 psi**
$\phi_{concrete}$ = 0.85
ϕ_{steel} = 0.90

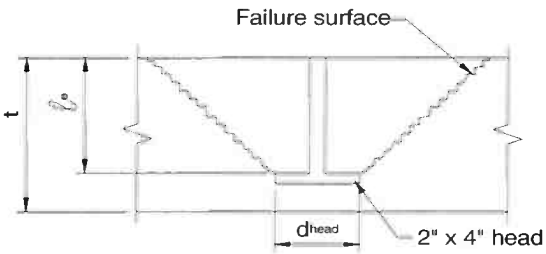

TENSION CAPACITY (Per PCI Design Handbook §6.5.2.1)

t > hmin: failure surface does not penetrate slab

Find pullout capacity of concrete

if t >= h_{min}, $\phi P_c = \phi 2.67 sqrt(f'c)(x+2le)(y+2le)$

if t < h_{min}, $\phi P_c = \phi 2.67 sqrt(f'c)[(x+2le)(y+2le) - A_R]$

ϕP_c = 60.18 K

Find tension capacity of studs

$\phi P_y = \phi f_y(A_{bar})(\#bars)$

ϕP_y = 71.57 K

controlling tension capacity (ϕP) = 60.18 K

Find moment capacity of anchor

Moment capacity of anchor (ϕM_n) = $\phi P(d-a/2)$

d = attachment depth - bar cover - $(y-Yd_{head})/2$ = 35 in

$a = A_s f_y / 0.85 f'_c b$ = 3.12 in

ϕM_n = 167.70 k-f

SHEAR CAPACITY (Per PCI Design Handbook §6.5.2.2)

Find shear capacity of concrete

$\phi V_c = \phi V'_c C_w C_t C_c$

$\phi V'_c = \phi 12.5 d_e^{1.5} \text{sqrt}(f'_c)$	= 187.4 K
$C_w = 1 + \text{spacing}/3.5d_e < \#\text{columns}$	= 1.0
$C_t = t/1.3d_e <= 1.0$	= 0.23
$C_c = 0.4 + 0.7d_c/de <= 1.0$	= 0.9
d_e = attachment depth - cover - bar dia/2	= 40 in
d_c = distance to side of wingwall	= 30 in

$\phi V_c = \phi V'_c C_w C_t C_c =$ 40.60 K

Find shear capacity of studs

$\phi V_y = \phi 0.9 f_y A_{bar}(\#\text{bars})$

$\phi V_y = 64.41$ K

controlling shear capacity (ϕV) = 40.60 K

FIND LOADS

Unfactored loads on anchors:

$M_{D(DL)}$ = (sec width)$M_{D(anchor)}$

$M_{D(LL)}$ = (sec width)($M_{D(anchor)}$ + P_{imp}*(wall ht + y_{imp}))

Factored loads:

Load factors are per AASHTO 3.22.1 & Table 3.22.1A

$M_u = (1.3)(1.3)M_{D(DL)} + (1.3)(1.67)M_{D(LL)}$

$P_u = M_u$ /(d-a/2)*cos(bar angle)

$V_u = M_u$ /(d-a/2)*sin(bar angle)

bar angle = 0°

Summary of forces

anchor	$M_{D(DL)}$ ft-k	$M_{D(LL)}$ ft-k	M_u ft-k	P_u k	V_u k
1	21.5	12.6	63.7	22.9	0.0
2	21.1	12.6	62.8	22.5	0.0
3	18.6	11.3	55.9	20.1	0.0
4	0.0	0.0	0.0	0.0	0.0
5	0.0	0.0	0.0	0.0	0.0

Summary of results

anchor	check $\phi M_n > M_u$	check $\phi P > P_u$	check $\phi V > V_u$	check combined V_c & P_c	check combined V_s & P_s
1	*OK*	*OK*	*OK*	*OK*	*OK*
2	*OK*	*OK*	*OK*	*OK*	*OK*
3	*n/a*	*OK*	*OK*	*OK*	*OK*
4	*n/a*	*n/a*	*n/a*	*n/a*	*n/a*
5	*n/a*	*n/a*	*n/a*	*n/a*	*n/a*

Section 9
Bridge Load Rating

Description	Pages
Summary	1
Mathcad Calculations: 42.42' x 4.583' Rigid Bridge, 0'-2' Earth Cover, HL93 & Vermont Permit Loads	12
STAAD PRO Output: 42.42' x 4.583' Rigid Bridge, 0'-2' Earth Cover, HL93 & Vermont Permit Loads	52
TOTAL PAGES	65

Proposed Improvement Project Bridge No 24; Woodstock, VT

03/01/16

LRFR LOAD RATING FACTORS

LOADING LEVELS	TRUCK						
	H-20	HL-93	3SC	6 AXLE	3A. STR.	4A. STR.	5A. SEMI.
TONNAGE	20	36	36	66	30	34.5	38
INVENTORY	1.48	1.06					
POSTING							
OPERATING	1.92	1.37	1.47	1.70	1.85	1.66	2.26

42.42ft x 4.583ft Box Culvert; *Design Input Data for STAAD.Pro Analysis; HL93 Live Load; Earth Cover C=0ft-2ft*

Reference Dwg: R22624-LO1

REFERENCE:

AASHTO The Manual for Bridge Evaluation 2nd Edition 2011

Design Parameters:

$\gamma_w := 62.4\frac{lbf}{ft^3}$ unit weight of water

$\gamma_c := 150\frac{lbf}{ft^3}$ unit weight of concrete

$\gamma_e := 140\frac{lbf}{ft^3}$ unit weight of earth

$DE_1 := 0.0$ ft Depth of earth Cover -Min

$DE_2 := 2.0$ ft Depth of earth Cover -Max

$DE_{ave} := \frac{DE_1 + DE_2}{2} = 1$ ft

$L_T := 10in$ Length of tire contact area -parallel to span

$K_{max} := .5$ max. earth pressure coefficient

$LLDF := 1.0$ factor for distribution of live load with depth of fill

$K_{min} := .25$ min. earth pressure coefficient

Geometry:

$ClearSpan := 42.42ft$ ClearSpan

$ClearRise := 4.583ft$ ClearRise

Member Properties:

$b := 12in$ design section width

$t_{tMin} := 17in$ Min. top slab thickness

$t_{wMin} := 18in$ Min wall thickness

$t_{tMax} := 22in$ Max.top slab thickness at the Intersection with the Wall

$t_{wMax} := 25in$ Max wall thickness

$Span := ClearSpan + t_{wMin} = 43.92ft$

$L_{Section} := 7.5ft$ Section Length

$Rise := ClearRise + t_{tMin} - t_{tMax} = 4.17ft$ Dimension to Calculate Soil Pressure for the Model

$t_{Min} := \frac{ClearSpan + 10ft}{30} = 1.747ft$ Estimate Slab Thickness AASHTO Table 2.5.2.6.3-1

$F_e := 1 + 0.2\frac{DE_{ave} \cdot ft}{ClearSpan + 2t_{wMin}} = 1.004$ **Soil-Structure Interaction Factor** AASHTO Eqn 12.11.2.2.1-2

$F_{emax} := \min(F_e, 1.15) = 1.004$

Dead Load: (DC)

$D_{pav} := F_{emax} \cdot \gamma_e DE_{ave} \cdot ft \cdot 1ft = 140.616 \cdot \frac{lbf}{ft}$ Dead load

9 Commercial Street
Hudson, NH
(800) 342-3374
Fax (603) 598-1344

Live Load: Design Truck

Multiple presence factor $M := 1.2$

$F_1 := 8000lbf$ Axle load 1 $F_{23} := 32000lbf$ Axle load 2 & 3

$Im := 33(1.0 - 0.125 \cdot DE_1)$ $Im = 33$ Dynamic load allowance $I_i := 1 + \frac{Im}{100}$ $I_i = 1.33$

$I := \max(1., I_i)$ $I = 1.33$

$E_{perp} := 96in + \left(1.44 \cdot \frac{ClearSpan}{12}\right)$ $E_{perp} = 13.09ft$ Distribution - perpendicular to span

$E_{para} := L_T + (LLDF \cdot DE_1 \cdot in)$ $E_{para} = 0.833ft$ Distribution - parallel to span

$D := 6ft$ Wheel spacing across a Design truck

$D1 := 14ft$ Typical Axle spacing of a Design truck

$P1 := \frac{M \cdot I \cdot F_1 \cdot ft}{E_{perp}}$ $P1 = 975.4 \cdot lbf$

$P2 := \frac{M \cdot I \cdot F_{23} \cdot ft}{E_{perp}}$ $P2 = 3.9 \times 10^3 \cdot lbf$

Live Load: Design Tandem

$F_{34} := 25000lbf$ Axle load 3 & 4

Multiple presence factor $M := 1.2$

$D := 6ft$ Wheel spacing across a Design tandem

$P3 := \frac{M \cdot I \cdot F_{34} \cdot ft}{E_{perp}}$ $P3 = 3.048 \times 10^3 \cdot lbf$

$D3 := 4ft$ Distance between Axles of a Design tandem

Live Load: Design Lane load :

Applicable only when Span is greater than 15ft

$W_{10} := 640 \frac{lbf}{ft}$ Design Lane load over 10 ft width

$W_1 := \frac{W_{10}}{10} = 64 \cdot \frac{lbf}{ft}$ Design Lane load per ft run

OTHER TRUCK CONFIGURATIONS

Live Load: H20

Multiple presence factor $M := 1.2$

$F_1 := 8000lbf$ Axle load 1 $F_{23} := 32000lbf$ Axle load 2 & 3 2 axles are Spaced : 14ft apart

$D := 6ft$ Wheel spacing

$P1 := \frac{M \cdot I \cdot F_1 \cdot ft}{E_{perp}}$ $P1 = 975.37 \cdot lbf$ $P2 := \frac{M \cdot I \cdot F_{23} \cdot ft}{E_{perp}}$ $P2 = 3.9 \times 10^3 \cdot lbf$

Live Load: 3S2

Multiple presence factor $M := 1.2$

$F_1 := 8000lbf$ Axle load 1 $F_{Others1} := 16000lbf$ Other Axle loads 5 axles are Spaced : 11ft, 4ft, 22ft & 4ft apart

$P1 := \frac{M \cdot I \cdot F_1 \cdot ft}{E_{perp}}$ $P1 = 975.371 \cdot lbf$ $P2 := \frac{M \cdot I \cdot F_{Others1} \cdot ft}{E_{perp}}$ $P2 = 1.951 \times 10^3 \cdot lbf$

Live Load: 6 Axle Trailer

Multiple presence factor $M := 1.0$

$F_1 := 12000lbf$ Axle load 1 $F_{Others2} := 24000lbf$ Other Axle loads 6 axles are Spaced: 11ft, 4.67ft, 31ft, 4ft & 4ft apart

$P2 := \frac{M \cdot I \cdot F_{Others2} \cdot ft}{E_{perp}}$ $P2 = 2.438 \times 10^3 \cdot lbf$

Live Load: 3 Axle Straight

Multiple presence factor $M := 1.2$

$F_1 := 12000lbf$ Axle load 1 $F_{Others3} := 24000lbf$ Other Axle loads 2 axle are Spaced: 15ft & 4ft apart

$P1 := \frac{M \cdot I \cdot F_1 \cdot ft}{E_{perp}}$ $P1 = 1.463 \times 10^3 \cdot lbf$ $P2 := \frac{M \cdot I \cdot F_{Others3} \cdot ft}{E_{perp}}$ $P2 = 2.926 \times 10^3 \cdot lbf$

Live Load: 4 Axle Straight

Multiple presence factor $M := 1.2$

$F_1 := 12000lbf$ Axle load 1 $F_{Others4} := 19000lbf$ Other Axle loads 4 axle are Spaced: 15ft, 4ft & 4ft apart

$P1 := \frac{M \cdot I \cdot F_1 \cdot ft}{E_{perp}}$ $P1 = 1.463 \times 10^3 \cdot lbf$ $P2 := \frac{M \cdot I \cdot F_{Others4} \cdot ft}{E_{perp}}$ $P2 = 2.317 \times 10^3 \cdot lbf$

Live Load: 5 Axle Semi

Multiple presence factor $M := 1.0$

$F_1 := 8000lbf$ Axle load 1 $F_{Others5} := 17000lbf$ Other Axle loads 5 axle are Spaced: 11ft, 4ft, 16ft & 4ft apart

$P1 := \frac{M \cdot I \cdot F_1 \cdot ft}{E_{perp}}$ $P1 = 812.809 \cdot lbf$ $P2 := \frac{M \cdot I \cdot F_{Others5} \cdot ft}{E_{perp}}$ $P2 = 1.727 \times 10^3 \cdot lbf$

Lateral Earth Pressure:

$H1 := DE_{ave} \cdot ft + t_{tMax} = 2.833\,ft$ soil depth at top of wall

$H2 := H1 + Rise = 7\,ft$ soil depth at bottom of wall

$LEPMIN := K_{min} \cdot \gamma_e \cdot 1ft = 35 \cdot \frac{lbf}{ft^2}$ minimum lateral earth pressure

$LEPMAX := K_{max} \cdot \gamma_e \cdot 1ft = 70 \cdot \frac{lbf}{ft^2}$ maximum lateral earth pressure

Minimum **(EMIN)**

$w_{et} := H1 \cdot LEPMIN = 99.167 \cdot \frac{lbf}{ft}$ top of wall

$w_{eb} := H2 \cdot LEPMIN = 244.988 \cdot \frac{lbf}{ft}$ bottom of wall

Maximum **(EMAX)**

$w_{et} := H1 \cdot LEPMAX = 198.333 \cdot \frac{lbf}{ft}$ top of wall

$w_{eb} := H2 \cdot LEPMAX = 489.977 \cdot \frac{lbf}{ft}$ bottom of wall

Internal Fluid Pressure:
(IFP)

$w_{ib} := \gamma_w \cdot ClearRise \cdot 1ft = 285.979 \cdot \frac{lbf}{ft}$ bottom of wall

42.42ft x 4.583 ft - *Box Culvert*
Load Rating Calculations

Reference Dwg: C22624- LO1

References:
1. **AASHTO The Manual for Bridge Evaluation 2nd Edition 2011**
2. **Attachment A: STAAD.Pro Computer Output.**

Load Combinations:
- 1.0DC+ 1.0Emin - "Dead".
- 1.0LL + 1.0Emin + 1.0Win - "MOMENT & SHEAR ".

Where,
DC - Dead Load;
LL - Live Load;
Emin - Min. Lateral Earth Pressure;
Win - Inside Water Pressure.

HL93 TRUCK

Inventory Rating: $\gamma_{DC} := 1.3$ $\gamma_{LL} := 1.75$

Moment

Top Slab: End Section — Capacity := 114300ft·lbf Dead := 0ft·lbf Live := 12270ft·lbf

$$RF := \frac{Capacity - \gamma_{DC} \cdot Dead}{\gamma_{LL} \cdot Live} \qquad RF = 5.32$$

Top Slab: Mid Section — Capacity := 154200ft·lbf Dead := 20993ft·lbf Live := 23940ft·lbf

$$RF := \frac{Capacity - \gamma_{DC} \cdot Dead}{\gamma_{LL} \cdot Live} \qquad RF = 3.03$$

Walls; — Capacity := 164300ft·lbf Dead := 46980ft·lbf Live := 42140ft·lbf

$$RF := \frac{Capacity - \gamma_{DC} \cdot Dead}{\gamma_{LL} \cdot Live} \qquad RF = 1.4$$

Shear

Top Slab: End Section — Capacity := 27560lbf Dead := 6158lbf Live := 6730lbf

$$RF := \frac{Capacity - \gamma_{DC} \cdot Dead}{\gamma_{LL} \cdot Live} \qquad RF = 1.66$$

Top Slab: Mid Section — Capacity := 20500lbf Dead := 4241lbf Live := 5370lbf

$$RF := \frac{Capacity - \gamma_{DC} \cdot Dead}{\gamma_{LL} \cdot Live} \qquad RF = 1.59$$

Walls; — Capacity := 31000lbf Dead := 10633lbf Live := 9270lbf

9 Commercial Street
Hudson, NH
(800) 342-3374
Fax (603) 598-1344

$$RF := \frac{Capacity - \gamma_{DC} \cdot Dead}{\gamma_{LL} \cdot Live} \qquad RF = 1.06$$

Inventory Rating: Use Min. Value of Rating $RF := 1.06$

Operating Rating: Use Values that govern Inventory Rating

$\gamma_{DC} := 1.3$ $\gamma_{LL} := 1.35$ $Capacity := 31000lbf$ $Dead := 10633lbf$ $Live := 9270lbf$

$$RF := \frac{Capacity - \gamma_{DC} \cdot Dead}{\gamma_{LL} \cdot Live} \qquad RF = 1.37$$

HL93 TANDEM

Inventory Rating: $\gamma_{DC} := 1.3$ $\gamma_{LL} := 1.75$

Moment

Top Slab: End Section

$Capacity := 114300ft \cdot lbf$ $Dead := 0ft \cdot lbf$ $Live := 15150ft \cdot lbf$

$$RF := \frac{Capacity - \gamma_{DC} \cdot Dead}{\gamma_{LL} \cdot Live} \qquad RF = 4.31$$

Top Slab: Mid Section

$Capacity := 154200ft \cdot lbf$ $Dead := 20993ft \cdot lbf$ $Live := 26510ft \cdot lbf$

$$RF := \frac{Capacity - \gamma_{DC} \cdot Dead}{\gamma_{LL} \cdot Live} \qquad RF = 2.74$$

Walls:

$Capacity := 164300ft \cdot lbf$ $Dead := 46980ft \cdot lbf$ $Live := 37210ft \cdot lbf$

$$RF := \frac{Capacity - \gamma_{DC} \cdot Dead}{\gamma_{LL} \cdot Live} \qquad RF = 1.59$$

Shear

Top Slab: End Section

$Capacity := 27560lbf$ $Dead := 6158lbf$ $Live := 6510lbf$

$$RF := \frac{Capacity - \gamma_{DC} \cdot Dead}{\gamma_{LL} \cdot Live} \qquad RF = 1.72$$

Top Slab: Mid Section

$Capacity := 20500lbf$ $Dead := 4241lbf$ $Live := 3820lbf$

$$RF := \frac{Capacity - \gamma_{DC} \cdot Dead}{\gamma_{LL} \cdot Live} \qquad RF = 2.24$$

Walls:

$Capacity := 31000lbf$ $Dead := 10633lbf$ $Live := 8200lbf$

$$RF := \frac{Capacity - \gamma_{DC} \cdot Dead}{\gamma_{LL} \cdot Live} \qquad RF = 1.2$$

Inventory Rating: Use Min. Value of Rating $RF := 1.2$

Operating Rating: Use Values that govern Inventory Rating

$\gamma_{DC} := 1.3$ $\gamma_{LL} := 1.35$ $Capacity := 31000lbf$ $Dead := 10633lbf$ $Live := 8200lbf$

$$RF := \frac{Capacity - \gamma_{DC} \cdot Dead}{\gamma_{LL} \cdot Live} \qquad RF = 1.55$$

Truck Rating Calculations (See attached Truck Diagrams)

H20

Inventory Rating: $\gamma_{DC} := 1.3$ $\gamma_{LL} := 1.75$

Moment

Top Slab: End Section

$Capacity := 114300ft \cdot lbf$ $Dead := 0ft \cdot lbf$ $Live := 11120ft \cdot lbf$

$$RF := \frac{Capacity - \gamma_{DC} \cdot Dead}{\gamma_{LL} \cdot Live} \qquad RF = 5.87$$

Top Slab: Mid Section

$Capacity := 154200ft \cdot lbf$ $Dead := 20993ft \cdot lbf$ $Live := 22160ft \cdot lbf$

$$RF := \frac{Capacity - \gamma_{DC} \cdot Dead}{\gamma_{LL} \cdot Live} \qquad RF = 3.27$$

Walls;

$Capacity := 164300ft \cdot lbf$ $Dead := 46980ft \cdot lbf$ $Live := 29930ft \cdot lbf$

$$RF := \frac{Capacity - \gamma_{DC} \cdot Dead}{\gamma_{LL} \cdot Live} \qquad RF = 1.97$$

Shear

Top Slab: End Section

$Capacity := 27560lbf$ $Dead := 6158lbf$ $Live := 4800lbf$

$$RF := \frac{Capacity - \gamma_{DC} \cdot Dead}{\gamma_{LL} \cdot Live} \qquad RF = 2.33$$

Top Slab: Mid Section

$Capacity := 20500lbf$ $Dead := 4241lbf$ $Live := 4010lbf$

$$RF := \frac{Capacity - \gamma_{DC} \cdot Dead}{\gamma_{LL} \cdot Live} \qquad RF = 2.14$$

Walls;

$Capacity := 31000lbf$ $Dead := 10633lbf$ $Live := 6620lbf$

$$RF := \frac{Capacity - \gamma_{DC} \cdot Dead}{\gamma_{LL} \cdot Live} \qquad RF = 1.48$$

Inventory Rating: Use Min. Value of Rating $RF := 1.48$

Operating Rating: Use Values that govern Inventory Rating

$\gamma_{DC} := 1.3$ $\gamma_{LL} := 1.35$ Capacity := 31000lbf Dead := 10633lbf Live := 6620lbf

$$RF := \frac{Capacity - \gamma_{DC} \cdot Dead}{\gamma_{LL} \cdot Live} \qquad RF = 1.92$$

3S2

Inventory Rating: $\gamma_{DC} := 1.3$ $\gamma_{LL} := 1.75$

Moment

Top Slab: End Section — Capacity := 114300ft·lbf Dead := 0ft·lbf Live := 10190ft·lbf

$$RF := \frac{Capacity - \gamma_{DC} \cdot Dead}{\gamma_{LL} \cdot Live} \qquad RF = 6.41$$

Top Slab: Mid Section — Capacity := 154200ft·lbf Dead := 20993ft·lbf Live := 14440ft·lbf

$$RF := \frac{Capacity - \gamma_{DC} \cdot Dead}{\gamma_{LL} \cdot Live} \qquad RF = 5.02$$

Walls: — Capacity := 164300ft·lbf Dead := 46980ft·lbf Live := 23150ft·lbf

$$RF := \frac{Capacity - \gamma_{DC} \cdot Dead}{\gamma_{LL} \cdot Live} \qquad RF = 2.55$$

Shear

Top Slab: End Section — Capacity := 27560lbf Dead := 6158lbf Live := 4370lbf

$$RF := \frac{Capacity - \gamma_{DC} \cdot Dead}{\gamma_{LL} \cdot Live} \qquad RF = 2.56$$

Top Slab: Mid Section — Capacity := 20500lbf Dead := 4241lbf Live := 3050lbf

$$RF := \frac{Capacity - \gamma_{DC} \cdot Dead}{\gamma_{LL} \cdot Live} \qquad RF = 2.81$$

Walls: — Capacity := 31000lbf Dead := 10633lbf Live := 5150lbf

$$RF := \frac{Capacity - \gamma_{DC} \cdot Dead}{\gamma_{LL} \cdot Live} \qquad RF = 1.91$$

Inventory Rating: Use Min. Value of Rating RF := 1.91

Operating Rating: Use Values that govern Inventory Rating

$\gamma_{DC} := 1.3$ $\gamma_{LL} := 1.35$ Capacity := 31000lbf Dead := 10633lbf Live := 5150lbf

$$RF := \frac{Capacity - \gamma_{DC} \cdot Dead}{\gamma_{LL} \cdot Live} \qquad RF = 2.47$$

6 AXLE TRAILER

Inventory Rating: $\gamma_{DC} := 1.3$ $\gamma_{LL} := 1.75$

Moment

Top Slab: End Section

Capacity := 114300ft·lbf Dead := 0ft·lbf Live := 32420ft·lbf

$$RF := \frac{Capacity - \gamma_{DC} \cdot Dead}{\gamma_{LL} \cdot Live} \qquad RF = 2.01$$

Top Slab: Mid Section

Capacity := 154200ft·lbf Dead := 20993ft·lbf Live := 25050ft·lbf

$$RF := \frac{Capacity - \gamma_{DC} \cdot Dead}{\gamma_{LL} \cdot Live} \qquad RF = 2.89$$

Walls;

Capacity := 164300ft·lbf Dead := 46980ft·lbf Live := 33900ft·lbf

$$RF := \frac{Capacity - \gamma_{DC} \cdot Dead}{\gamma_{LL} \cdot Live} \qquad RF = 1.74$$

Shear

Top Slab: End Section

Capacity := 27560lbf Dead := 6158lbf Live := 5690lbf

$$RF := \frac{Capacity - \gamma_{DC} \cdot Dead}{\gamma_{LL} \cdot Live} \qquad RF = 1.96$$

Top Slab: Mid Section

Capacity := 20500lbf Dead := 4241lbf Live := 4990lbf

$$RF := \frac{Capacity - \gamma_{DC} \cdot Dead}{\gamma_{LL} \cdot Live} \qquad RF = 1.72$$

Walls;

Capacity := 31000lbf Dead := 10633lbf Live := 7480lbf

$$RF := \frac{Capacity - \gamma_{DC} \cdot Dead}{\gamma_{LL} \cdot Live} \qquad RF = 1.31$$

Inventory Rating: Use Min. Value of Rating RF := 1.31

Operating Rating: Use Values that govern Inventory Rating

$\gamma_{DC} := 1.3$ $\gamma_{LL} := 1.35$ Capacity := 31000lbf Dead := 10633lbf Live := 7480lbf

$$RF := \frac{Capacity - \gamma_{DC} \cdot Dead}{\gamma_{LL} \cdot Live} \qquad RF = 1.7$$

3 AXLE STRAIGHT

Inventory Rating: $\gamma_{DC} := 1.3$ $\gamma_{LL} := 1.75$

Moment

Top Slab: End Section

Capacity := 114300ft·lbf Dead := 0ft·lbf Live := 29710ft·lbf

$$RF := \frac{Capacity - \gamma_{DC} \cdot Dead}{\gamma_{LL} \cdot Live} \qquad RF = 2.2$$

Top Slab: Mid Section

Capacity := 154200ft·lbf Dead := 20993ft·lbf Live := 22240ft·lbf

$$RF := \frac{Capacity - \gamma_{DC} \cdot Dead}{\gamma_{LL} \cdot Live} \qquad RF = 3.26$$

Walls;

Capacity := 164300ft·lbf Dead := 46980ft·lbf Live := 31190ft·lbf

$$RF := \frac{Capacity - \gamma_{DC} \cdot Dead}{\gamma_{LL} \cdot Live} \qquad RF = 1.89$$

Shear

Top Slab: End Section

Capacity := 27560lbf Dead := 6158lbf Live := 5210lbf

$$RF := \frac{Capacity - \gamma_{DC} \cdot Dead}{\gamma_{LL} \cdot Live} \qquad RF = 2.14$$

Top Slab: Mid Section

Capacity := 20500lbf Dead := 4241lbf Live := 4430lbf

$$RF := \frac{Capacity - \gamma_{DC} \cdot Dead}{\gamma_{LL} \cdot Live} \qquad RF = 1.93$$

Walls;

Capacity := 31000lbf Dead := 10633lbf Live := 6890lbf

$$RF := \frac{Capacity - \gamma_{DC} \cdot Dead}{\gamma_{LL} \cdot Live} \qquad RF = 1.42$$

Inventory Rating: Use Min. Value of Rating RF := 1.42

Operating Rating: Use Values that govern Inventory Rating

$\gamma_{DC} := 1.3$ $\gamma_{LL} := 1.35$ Capacity := 31000lbf Dead := 10633lbf Live := 6890lbf

$$RF := \frac{Capacity - \gamma_{DC} \cdot Dead}{\gamma_{LL} \cdot Live} \qquad RF = 1.85$$

4 AXLE STRAIGHT

Inventory Rating: $\gamma_{DC} := 1.3$ $\gamma_{LL} := 1.75$

Moment

Top Slab: End Section

Capacity := 114300ft·lbf Dead := 0ft·lbf Live := 14750ft·lbf

$$RF := \frac{Capacity - \gamma_{DC} \cdot Dead}{\gamma_{LL} \cdot Live} \qquad RF = 4.43$$

Top Slab: Mid Section

Capacity := 154200ft·lbf Dead := 20993ft·lbf Live := 24120ft·lbf

$$RF := \frac{Capacity - \gamma_{DC} \cdot Dead}{\gamma_{LL} \cdot Live} \qquad RF = 3.01$$

Walls:

Capacity := 164300ft·lbf Dead := 46980ft·lbf Live := 34840ft·lbf

$$RF := \frac{Capacity - \gamma_{DC} \cdot Dead}{\gamma_{LL} \cdot Live} \qquad RF = 1.69$$

Shear

Top Slab: End Section

Capacity := 27560lbf Dead := 6158lbf Live := 5380lbf

$$RF := \frac{Capacity - \gamma_{DC} \cdot Dead}{\gamma_{LL} \cdot Live} \qquad RF = 2.08$$

Top Slab: Mid Section

Capacity := 20500lbf Dead := 4241lbf Live := 4420lbf

$$RF := \frac{Capacity - \gamma_{DC} \cdot Dead}{\gamma_{LL} \cdot Live} \qquad RF = 1.94$$

Walls:

Capacity := 31000lbf Dead := 10633lbf Live := 7680lbf

$$RF := \frac{Capacity - \gamma_{DC} \cdot Dead}{\gamma_{LL} \cdot Live} \qquad RF = 1.28$$

Inventory Rating: Use Min. Value of Rating RF := 1.28

Operating Rating: Use Values that govern Inventory Rating

$\gamma_{DC} := 1.3$ $\gamma_{LL} := 1.35$ Capacity := 31000lbf Dead := 10633lbf Live := 7680lbf

$$RF := \frac{Capacity - \gamma_{DC} \cdot Dead}{\gamma_{LL} \cdot Live} \qquad RF = 1.66$$

5 AXLE SEMI

Inventory Rating: $\gamma_{DC} := 1.3$ $\gamma_{LL} := 1.75$

Moment

Top Slab: End Section

Capacity := 114300ft·lbf Dead := 0ft·lbf Live := 9020ft·lbf

$$RF := \frac{Capacity - \gamma_{DC} \cdot Dead}{\gamma_{LL} \cdot Live} \qquad RF = 7.24$$

Top Slab: Mid Section

Capacity := 154200ft·lbf Dead := 20993ft·lbf Live := 13780ft·lbf

$$RF := \frac{Capacity - \gamma_{DC} \cdot Dead}{\gamma_{LL} \cdot Live} \qquad RF = 5.26$$

Walls;

Capacity := 164300ft·lbf Dead := 46980ft·lbf Live := 25340ft·lbf

$$RF := \frac{Capacity - \gamma_{DC} \cdot Dead}{\gamma_{LL} \cdot Live} \qquad RF = 2.33$$

Shear

Top Slab: End Section

Capacity := 27560lbf Dead := 6158lbf Live := 4300lbf

$$RF := \frac{Capacity - \gamma_{DC} \cdot Dead}{\gamma_{LL} \cdot Live} \qquad RF = 2.6$$

Top Slab: Mid Section

Capacity := 20500lbf Dead := 4241lbf Live := 3130lbf

$$RF := \frac{Capacity - \gamma_{DC} \cdot Dead}{\gamma_{LL} \cdot Live} \qquad RF = 2.74$$

Walls;

Capacity := 31000lbf Dead := 10633lbf Live := 5620lbf

$$RF := \frac{Capacity - \gamma_{DC} \cdot Dead}{\gamma_{LL} \cdot Live} \qquad RF = 1.75$$

Inventory Rating: Use Min. Value of Rating RF := 1.75

Operating Rating: Use Values that govern Inventory Rating

$\gamma_{DC} := 1.3$ $\gamma_{LL} := 1.35$ Capacity := 31000lbf Dead := 10633lbf Live := 5620lbf

$$RF := \frac{Capacity - \gamma_{DC} \cdot Dead}{\gamma_{LL} \cdot Live} \qquad RF = 2.26$$

```
**************************************************
*                                                *
*           STAAD.Pro V8i SELECTseries5          *
*           Version  20.07.10.65                 *
*           Proprietary Program of               *
*           Bentley Systems, Inc.                *
*           Date=    MAR  1, 2016                *
*           Time=    14:35: 1                    *
*                                                *
*      USER ID:                                  *
**************************************************
```

```
     1. STAAD SPACE
INPUT FILE: 42.42'x5'-Fixed.STD
     2. START JOB INFORMATION
     3. ENGINEER DATE 12/22/15
     4. ENGINEER NAME BK
     5. END JOB INFORMATION
     6. INPUT WIDTH 79
     7. UNIT FEET KIP
     8. JOINT COORDINATES
     9. 1 -21.96 0 0; 2 21.96 0 0; 3 -21.96 5.583 0; 4 -12 5.583 0; 5 0 5.583 0
    10. 6 12 5.583 0; 7 21.96 5.583 0
    11. MEMBER INCIDENCES
    12. 1 1 3; 2 2 7; 3 3 4; 4 4 5; 5 6 5; 6 7 6
    13. DEFINE MATERIAL START
    14. ISOTROPIC CONCRETE5000
    15. E 580390
    16. POISSON 0.17
    17. DENSITY 0.15
    18. ALPHA 5.5E-006
    19. DAMP 0.05
    20. ISOTROPIC STEEL
    21. E 4.176E+006
    22. POISSON 0.3
    23. DENSITY 0.489024
    24. ALPHA 6.5E-006
    25. DAMP 0.03
    26. END DEFINE MATERIAL
    27. MEMBER PROPERTY AMERICAN
    28. 4 5 PRIS YD 1.416 ZD 1
    29. MEMBER PROPERTY AMERICAN
    30. 1 2 TAPERED 2.083 1 1.5 1 0.2 1 0.2
    31. 3 6 TAPERED 1.83 1 1.416 1 0.2 1 0.2
    32. CONSTANTS
    33. MATERIAL CONCRETE5000 ALL
    34. SUPPORTS
    35. 1 FIXED BUT MZ
    36. 2 FIXED BUT MZ
    37. MEMBER OFFSET
    38. 3 START 1 -1.12 0
```

```
 39. 6 START -1 -1.12 0
 40. 1 END 0.75 -1.04 0
 41. 2 END -0.75 -1.04 0
 42. DEFINE MOVING LOAD
 43. ***H20
 44. TYPE 1 LOAD 0.975 3.9
 45. DIST 14
 46. ***HL93 TRUCK
 47. TYPE 2 LOAD 0.975 3.9 3.9
 48. DIST 14 14
 49. ***HL93 TANDEM
 50. TYPE 3 LOAD 3.05 3.05
 51. DIST 4
 52. ***3S2
 53. TYPE 4 LOAD 0.975 1.95 1.95 1.95 1.95
 54. DIST 11 4 22 4
 55. ***6 AXLE TRAILER
 56. TYPE 5 LOAD 2.44 2.44 2.44 2.44
 57. DIST 31 4 4
 58. ***3 AXLE STRAIGHT
 59. TYPE 6 LOAD 1.463 2.926 2.926
 60. DIST 15 4
 61. ***4 AXLE STRAIGHT
 62. TYPE 7 LOAD 1.463 2.317 2.317 2.317
 63. DIST 15 4 4
 64. ***5 AXLE SEMI
 65. TYPE 8 LOAD 0.812 1.727 1.727 1.727 1.727
 66. DIST 11 4 16 4
 67. ***
 68. LOAD 1 LOADTYPE NONE  TITLE LOAD CASE 1- UNIFORM LOAD
 69. MEMBER LOAD
 70. 3 4 5 6 UNI GY -0.141
 71. SELFWEIGHT Y -1
 72. LOAD 2 LOADTYPE LIVE  TITLE LANE LOAD
 73. MEMBER LOAD
 74. 3 4 5 6 UNI GY -0.064
 75. LOAD 3 LOADTYPE NONE  TITLE LOAD CASE 4 -EMIN
 76. MEMBER LOAD
 77. 1 TRAP GX 0.245 0.099
 78. 2 TRAP GX -0.245 -0.099
 79. LOAD 4 LOADTYPE NONE  TITLE LOAD CASE 6 -INSIDE WATER
 80. MEMBER LOAD
 81. 1 TRAP GX -0.286 0
 82. 2 TRAP GX 0.286 0
 83. ***H20
 84. LOAD 10 LOADTYPE LIVE  TITLE LOAD CASE
 85. LOAD GENERATION 9
 86. TYPE 1 -35.96 5.583 0 XINC 4
 87. ***HL93 TRUCK
 88. LOAD 20 LOADTYPE LIVE  TITLE LOAD CASE
**WARNING-A MOVING LOAD THAT WOULD HAVE BEEN APPLIED BEYOND THE X AND Z RANGES
          OF THE STRUCTURE HAS BEEN IGNORED. CASE=   11 WHEEL   1 OF   2
**WARNING-A MOVING LOAD THAT WOULD HAVE BEEN APPLIED BEYOND THE X AND Z RANGES
          OF THE STRUCTURE HAS BEEN IGNORED. CASE=   12 WHEEL   1 OF   2
**WARNING-A MOVING LOAD THAT WOULD HAVE BEEN APPLIED BEYOND THE X AND Z RANGES
          OF THE STRUCTURE HAS BEEN IGNORED. CASE=   13 WHEEL   1 OF   2
```

```
**WARNING-A MOVING LOAD THAT WOULD HAVE BEEN APPLIED BEYOND THE X AND Z RANGES
          OF THE STRUCTURE HAS BEEN IGNORED. CASE=   14 WHEEL   1 OF   2
 89. LOAD GENERATION 9
 90. TYPE 2 -49.96 5.583 0 XINC 5
 91. ***HL93 TANDEM
 92. LOAD 30 LOADTYPE LIVE  TITLE LOAD CASE
**WARNING-A MOVING LOAD THAT WOULD HAVE BEEN APPLIED BEYOND THE X AND Z RANGES
          OF THE STRUCTURE HAS BEEN IGNORED. CASE=   21 WHEEL   1 OF   3
**WARNING-A MOVING LOAD THAT WOULD HAVE BEEN APPLIED BEYOND THE X AND Z RANGES
          OF THE STRUCTURE HAS BEEN IGNORED. CASE=   21 WHEEL   2 OF   3
**WARNING-A MOVING LOAD THAT WOULD HAVE BEEN APPLIED BEYOND THE X AND Z RANGES
          OF THE STRUCTURE HAS BEEN IGNORED. CASE=   22 WHEEL   1 OF   3
**WARNING-A MOVING LOAD THAT WOULD HAVE BEEN APPLIED BEYOND THE X AND Z RANGES
          OF THE STRUCTURE HAS BEEN IGNORED. CASE=   22 WHEEL   2 OF   3
**WARNING-A MOVING LOAD THAT WOULD HAVE BEEN APPLIED BEYOND THE X AND Z RANGES
          OF THE STRUCTURE HAS BEEN IGNORED. CASE=   23 WHEEL   1 OF   3
**WARNING-A MOVING LOAD THAT WOULD HAVE BEEN APPLIED BEYOND THE X AND Z RANGES
          OF THE STRUCTURE HAS BEEN IGNORED. CASE=   23 WHEEL   2 OF   3
*ADDITIONAL MOVING LOAD MESSAGES SUPPRESSED
*ADDITIONAL MOVING LOAD MESSAGES SUPPRESSED
 93. LOAD GENERATION 8
 94. TYPE 3 -25.96 5.583 0 XINC 4
 95. ***3S2
 96. LOAD 40 LOADTYPE LIVE  TITLE LOAD CASE
 97. LOAD GENERATION 8
 98. TYPE 4 -62.96 5.583 0 XINC 6
 99. ***6 AXLE TRAILER
100. LOAD 50 LOADTYPE LIVE  TITLE LOAD CASE
101. LOAD GENERATION 8
102. TYPE 5 -60.96 5.583 0 XINC 6
103. ***3 AXLE STRAIGHT
104. LOAD 60 LOADTYPE LIVE  TITLE LOAD CASE
105. LOAD GENERATION 9
106. TYPE 6 -40.96 5.583 0 XINC 4
107. ***4 AXLE STRAIGHT
108. LOAD 70 LOADTYPE LIVE  TITLE LOAD CASE
109. LOAD GENERATION 8
110. TYPE 7 -44.96 5.583 0 XINC 5
111. ***5 AXLE SEMI
112. LOAD 80 LOADTYPE LIVE  TITLE LOAD CASE
113. LOAD GENERATION 8
114. TYPE 8 -56.96 5.583 0 XINC 6
115. ***
116. LOAD COMB 100 COMBINATION LOAD CASE
117. 1 1.0 3 1.0
118. ***
119. LOAD COMB 101 COMBINATION LOAD CASE
120. 11 1.0 2 1.0 3 1.0 4 1.0
121. LOAD COMB 102 COMBINATION LOAD CASE
122. 12 1.0 2 1.0 3 1.0 4 1.0
123. LOAD COMB 103 COMBINATION LOAD CASE
124. 13 1.0 2 1.0 3 1.0 4 1.0
125. LOAD COMB 104 COMBINATION LOAD CASE
126. 14 1.0 2 1.0 3 1.0 4 1.0
127. LOAD COMB 105 COMBINATION LOAD CASE
128. 15 1.0 2 1.0 3 1.0 4 1.0
```

```
129. LOAD COMB 106 COMBINATION LOAD CASE
130. 16 1.0 2 1.0 3 1.0 4 1.0
131. LOAD COMB 107 COMBINATION LOAD CASE
132. 17 1.0 2 1.0 3 1.0 4 1.0
133. LOAD COMB 108 COMBINATION LOAD CASE
134. 18 1.0 2 1.0 3 1.0 4 1.0
135. LOAD COMB 109 COMBINATION LOAD CASE
136. 19 1.0 2 1.0 3 1.0 4 1.0
137. ***
138. LOAD COMB 201 COMBINATION LOAD CASE
139. 21 1.0 2 1.0 3 1.0 4 1.0
140. LOAD COMB 202 COMBINATION LOAD CASE
141. 22 1.0 2 1.0 3 1.0 4 1.0
142. LOAD COMB 203 COMBINATION LOAD CASE
143. 23 1.0 2 1.0 3 1.0 4 1.0
144. LOAD COMB 204 COMBINATION LOAD CASE
145. 24 1.0 2 1.0 3 1.0 4 1.0
146. LOAD COMB 205 COMBINATION LOAD CASE
147. 25 1.0 2 1.0 3 1.0 4 1.0
148. LOAD COMB 206 COMBINATION LOAD CASE
149. 26 1.0 2 1.0 3 1.0 4 1.0
150. LOAD COMB 207 COMBINATION LOAD CASE
151. 27 1.0 2 1.0 3 1.0 4 1.0
152. LOAD COMB 208 COMBINATION LOAD CASE
153. 28 1.0 2 1.0 3 1.0 4 1.0
154. LOAD COMB 209 COMBINATION LOAD CASE
155. 29 1.0 2 1.0 3 1.0 4 1.0
156. ***
157. LOAD COMB 301 COMBINATION LOAD CASE
158. 31 1.0 2 1.0 3 1.0 4 1.0
159. LOAD COMB 302 COMBINATION LOAD CASE
160. 32 1.0 2 1.0 3 1.0 4 1.0
161. LOAD COMB 303 COMBINATION LOAD CASE
162. 33 1.0 2 1.0 3 1.0 4 1.0
163. LOAD COMB 304 COMBINATION LOAD CASE
164. 34 1.0 2 1.0 3 1.0 4 1.0
165. LOAD COMB 305 COMBINATION LOAD CASE
166. 35 1.0 2 1.0 3 1.0 4 1.0
167. LOAD COMB 306 COMBINATION LOAD CASE
168. 36 1.0 2 1.0 3 1.0 4 1.0
169. LOAD COMB 307 COMBINATION LOAD CASE
170. 37 1.0 2 1.0 3 1.0 4 1.0
171. LOAD COMB 308 COMBINATION LOAD CASE
172. 38 1.0 2 1.0 3 1.0 4 1.0
173. ***
174. LOAD COMB 401 COMBINATION LOAD CASE
175. 41 1.0 3 1.0 4 1.0
176. LOAD COMB 402 COMBINATION LOAD CASE
177. 42 1.0 3 1.0 4 1.0
178. LOAD COMB 403 COMBINATION LOAD CASE
179. 43 1.0 3 1.0 4 1.0
180. LOAD COMB 404 COMBINATION LOAD CASE
181. 44 1.0 3 1.0 4 1.0
182. LOAD COMB 405 COMBINATION LOAD CASE
183. 45 1.0 3 1.0 4 1.0
184. LOAD COMB 406 COMBINATION LOAD CASE
```

```
185. 46 1.0 3 1.0 4 1.0
186. LOAD COMB 407 COMBINATION LOAD CASE
187. 47 1.0 3 1.0 4 1.0
188. LOAD COMB 408 COMBINATION LOAD CASE
189. 48 1.0 3 1.0 4 1.0
190. ***
191. LOAD COMB 501 COMBINATION LOAD CASE
192. 51 1.0 3 1.0 4 1.0
193. LOAD COMB 502 COMBINATION LOAD CASE
194. 52 1.0 3 1.0 4 1.0
195. LOAD COMB 503 COMBINATION LOAD CASE
196. 53 1.0 3 1.0 4 1.0
197. LOAD COMB 504 COMBINATION LOAD CASE
198. 54 1.0 3 1.0 4 1.0
199. LOAD COMB 505 COMBINATION LOAD CASE
200. 55 1.0 3 1.0 4 1.0
201. LOAD COMB 506 COMBINATION LOAD CASE
202. 56 1.0 3 1.0 4 1.0
203. LOAD COMB 507 COMBINATION LOAD CASE
204. 57 1.0 3 1.0 4 1.0
205. LOAD COMB 508 COMBINATION LOAD CASE
206. 58 1.0 3 1.0 4 1.0
207. ***
208. LOAD COMB 601 COMBINATION LOAD CASE
209. 61 1.0 3 1.0 4 1.0
210. LOAD COMB 602 COMBINATION LOAD CASE
211. 62 1.0 3 1.0 4 1.0
212. LOAD COMB 603 COMBINATION LOAD CASE
213. 63 1.0 3 1.0 4 1.0
214. LOAD COMB 604 COMBINATION LOAD CASE
215. 64 1.0 3 1.0 4 1.0
216. LOAD COMB 605 COMBINATION LOAD CASE
217. 65 1.0 3 1.0 4 1.0
218. LOAD COMB 606 COMBINATION LOAD CASE
219. 66 1.0 3 1.0 4 1.0
220. LOAD COMB 607 COMBINATION LOAD CASE
221. 67 1.0 3 1.0 4 1.0
222. LOAD COMB 608 COMBINATION LOAD CASE
223. 68 1.0 3 1.0 4 1.0
224. LOAD COMB 609 COMBINATION LOAD CASE
225. 69 1.0 3 1.0 4 1.0
226. ***
227. LOAD COMB 701 COMBINATION LOAD CASE
228. 71 1.0 3 1.0 4 1.0
229. LOAD COMB 702 COMBINATION LOAD CASE
230. 72 1.0 3 1.0 4 1.0
231. LOAD COMB 703 COMBINATION LOAD CASE
232. 73 1.0 3 1.0 4 1.0
233. LOAD COMB 704 COMBINATION LOAD CASE
234. 74 1.0 3 1.0 4 1.0
235. LOAD COMB 705 COMBINATION LOAD CASE
236. 75 1.0 3 1.0 4 1.0
237. LOAD COMB 706 COMBINATION LOAD CASE
238. 76 1.0 3 1.0 4 1.0
239. LOAD COMB 707 COMBINATION LOAD CASE
240. 77 1.0 3 1.0 4 1.0
```

```
241. LOAD COMB 708 COMBINATION LOAD CASE
242. 78 1.0 3 1.0 4 1.0
243. ***
244. LOAD COMB 801 COMBINATION LOAD CASE
245. 81 1.0 3 1.0 4 1.0
246. LOAD COMB 802 COMBINATION LOAD CASE
247. 82 1.0 3 1.0 4 1.0
248. LOAD COMB 803 COMBINATION LOAD CASE
249. 83 1.0 3 1.0 4 1.0
250. LOAD COMB 804 COMBINATION LOAD CASE
251. 84 1.0 3 1.0 4 1.0
252. LOAD COMB 805 COMBINATION LOAD CASE
253. 85 1.0 3 1.0 4 1.0
254. LOAD COMB 806 COMBINATION LOAD CASE
255. 86 1.0 3 1.0 4 1.0
256. LOAD COMB 807 COMBINATION LOAD CASE
257. 87 1.0 3 1.0 4 1.0
258. LOAD COMB 808 COMBINATION LOAD CASE
259. 88 1.0 3 1.0 4 1.0
260. PERFORM ANALYSIS


        P R O B L E M   S T A T I S T I C S
        -----------------------------------

  NUMBER OF JOINTS          7  NUMBER OF MEMBERS       6
  NUMBER OF PLATES          0  NUMBER OF SOLIDS        0
  NUMBER OF SURFACES        0  NUMBER OF SUPPORTS      2


       SOLVER USED IS THE OUT-OF-CORE BASIC SOLVER

  ORIGINAL/FINAL BAND-WIDTH=     5/     5/     31 DOF
TOTAL      PRIMARY LOAD CASES =    79, TOTAL DEGREES OF FREEDOM =      32
TOTAL LOAD COMBINATION  CASES =    68  SO FAR.
  SIZE OF STIFFNESS MATRIX =        1 DOUBLE  KILO-WORDS
  REQRD/AVAIL. DISK SPACE  =     12.1/      0.0 MB


**WARNING** LOAD BEYOND ITS LENGTH. FULL LENGTH ASSUMED. MEMB     6 CASE   58
            LENGTH=       9.03  LOAD POINT=       9.92


261. LOAD LIST 100
262. PRINT FORCE ENVELOPE NSECTION 4 LIST 1 TO 6
```

MEMBER FORCE ENVELOPE

ALL UNITS ARE KIP FEET

MEMB	DISTANCE		FY	LD	MZ	LD	FZ	LD	MY	LD
1	0.00	MAX	-9.65	100	0.00	100	0.00	100	0.00	100
		MIN	-9.65	100	0.00	100	0.00	100	0.00	100
	0.38	MAX	-9.76	100	3.72	100	0.00	100	0.00	100
		MIN	-9.76	100	3.72	100	0.00	100	0.00	100
	0.77	MAX	-9.86	100	7.49	100	0.00	100	0.00	100
		MIN	-9.86	100	7.49	100	0.00	100	0.00	100
	1.15	MAX	-9.96	100	11.29	100	0.00	100	0.00	100
		MIN	-9.96	100	11.29	100	0.00	100	0.00	100
	1.53	MAX	-10.06	100	15.14	100	0.00	100	0.00	100
		MIN	-10.06	100	15.14	100	0.00	100	0.00	100
	1.92	MAX	-10.15	100	19.01	100	0.00	100	0.00	100
		MIN	-10.15	100	19.01	100	0.00	100	0.00	100
	2.30	MAX	-10.23	100	22.92	100	0.00	100	0.00	100
		MIN	-10.23	100	22.92	100	0.00	100	0.00	100
	2.69	MAX	-10.31	100	26.87	100	0.00	100	0.00	100
		MIN	-10.31	100	26.87	100	0.00	100	0.00	100
	3.07	MAX	-10.39	100	30.84	100	0.00	100	0.00	100
		MIN	-10.39	100	30.84	100	0.00	100	0.00	100
	3.45	MAX	-10.46	100	34.84	100	0.00	100	0.00	100
		MIN	-10.46	100	34.84	100	0.00	100	0.00	100
	3.84	MAX	-10.52	100	38.86	100	0.00	100	0.00	100
		MIN	-10.52	100	38.86	100	0.00	100	0.00	100
	4.22	MAX	-10.58	100	42.91	100	0.00	100	0.00	100
		MIN	-10.58	100	42.91	100	0.00	100	0.00	100
	4.60	MAX	-10.63	100	46.98	100	0.00	100	0.00	100
		MIN	-10.63	100	46.98	100	0.00	100	0.00	100

MAX/MIN FORCE VALUES FOR MEMB 1, AMONGST ALL SECT LOCATIONS

	FY/ FZ	DIST DIST	LD LD	MZ/ MY	DIST DIST	LD LD	FX	DIST	LD
MAX.	-9.65	0.00	100	46.98	4.60	100			
	0.00	0.00	100	0.00	0.00	100	10.66 C	0.00	100
MIN.	-10.63	4.60	100	0.00	0.00	100			
	0.00	4.60	100	0.00	4.60	100	9.57 C	4.60	100

2	0.00	MAX	-9.65	100	0.00	100	0.00	100	0.00	100
		MIN	-9.65	100	0.00	100	0.00	100	0.00	100
	0.38	MAX	-9.76	100	3.72	100	0.00	100	0.00	100
		MIN	-9.76	100	3.72	100	0.00	100	0.00	100

	0.77	MAX	-9.86	100	7.49	100	0.00	100	0.00	100
		MIN	-9.86	100	7.49	100	0.00	100	0.00	100
	1.15	MAX	-9.96	100	11.29	100	0.00	100	0.00	100
		MIN	-9.96	100	11.29	100	0.00	100	0.00	100
	1.53	MAX	-10.06	100	15.14	100	0.00	100	0.00	100
		MIN	-10.06	100	15.14	100	0.00	100	0.00	100
	1.92	MAX	-10.15	100	19.01	100	0.00	100	0.00	100
		MIN	-10.15	100	19.01	100	0.00	100	0.00	100
	2.30	MAX	-10.23	100	22.92	100	0.00	100	0.00	100
		MIN	-10.23	100	22.92	100	0.00	100	0.00	100
	2.69	MAX	-10.31	100	26.87	100	0.00	100	0.00	100
		MIN	-10.31	100	26.87	100	0.00	100	0.00	100
	3.07	MAX	-10.39	100	30.84	100	0.00	100	0.00	100
		MIN	-10.39	100	30.84	100	0.00	100	0.00	100
	3.45	MAX	-10.46	100	34.84	100	0.00	100	0.00	100
		MIN	-10.46	100	34.84	100	0.00	100	0.00	100
	3.84	MAX	-10.52	100	38.86	100	0.00	100	0.00	100
		MIN	-10.52	100	38.86	100	0.00	100	0.00	100
	4.22	MAX	-10.58	100	42.91	100	0.00	100	0.00	100
		MIN	-10.58	100	42.91	100	0.00	100	0.00	100
	4.60	MAX	-10.63	100	46.98	100	0.00	100	0.00	100
		MIN	-10.63	100	46.98	100	0.00	100	0.00	100

MAX/MIN FORCE VALUES FOR MEMB 2, AMONGST ALL SECT LOCATIONS

	FY/ FZ	DIST DIST	LD LD	MZ/ MY	DIST DIST	LD LD	FX	DIST	LD
MAX.	-9.65	0.00	100	46.98	4.60	100			
	0.00	0.00	100	0.00	0.00	100	10.66 C	0.00	100
MIN.	-10.63	4.60	100	0.00	0.00	100			
	0.00	4.60	100	0.00	4.60	100	9.57 C	4.60	100

3	0.00	MAX	6.16	100	44.09	100	0.00	100	0.00	100
		MIN	6.16	100	44.09	100	0.00	100	0.00	100
	0.75	MAX	5.85	100	39.57	100	0.00	100	0.00	100
		MIN	5.85	100	39.57	100	0.00	100	0.00	100
	1.50	MAX	5.55	100	35.28	100	0.00	100	0.00	100
		MIN	5.55	100	35.28	100	0.00	100	0.00	100
	2.26	MAX	5.24	100	31.22	100	0.00	100	0.00	100
		MIN	5.24	100	31.22	100	0.00	100	0.00	100
	3.01	MAX	4.95	100	27.39	100	0.00	100	0.00	100
		MIN	4.95	100	27.39	100	0.00	100	0.00	100
	3.76	MAX	4.66	100	23.77	100	0.00	100	0.00	100
		MIN	4.66	100	23.77	100	0.00	100	0.00	100
	4.51	MAX	4.37	100	20.38	100	0.00	100	0.00	100
		MIN	4.37	100	20.38	100	0.00	100	0.00	100
	5.27	MAX	4.08	100	17.20	100	0.00	100	0.00	100
		MIN	4.08	100	17.20	100	0.00	100	0.00	100
	6.02	MAX	3.80	100	14.24	100	0.00	100	0.00	100
		MIN	3.80	100	14.24	100	0.00	100	0.00	100
	6.77	MAX	3.52	100	11.48	100	0.00	100	0.00	100
		MIN	3.52	100	11.48	100	0.00	100	0.00	100

	7.52	MAX	3.25	100	8.94	100	0.00	100	0.00	100
		MIN	3.25	100	8.94	100	0.00	100	0.00	100
	8.28	MAX	2.98	100	6.59	100	0.00	100	0.00	100
		MIN	2.98	100	6.59	100	0.00	100	0.00	100
	9.03	MAX	2.71	100	4.45	100	0.00	100	0.00	100
		MIN	2.71	100	4.45	100	0.00	100	0.00	100

MAX/MIN FORCE VALUES FOR MEMB 3, AMONGST ALL SECT LOCATIONS

	FY/ FZ	DIST DIST	LD LD	MZ/ MY	DIST DIST	LD LD	FX	DIST	LD
MAX.	6.16	0.00	100	44.09	0.00	100			
	0.00	0.00	100	0.00	0.00	100	12.91 C	0.00	100
MIN.	2.71	9.03	100	4.45	9.03	100			
	0.00	9.03	100	0.00	9.03	100	12.48 C	9.03	100

4	0.00	MAX	4.24	100	4.45	100	0.00	100	0.00	100
		MIN	4.24	100	4.45	100	0.00	100	0.00	100
	1.00	MAX	3.89	100	0.39	100	0.00	100	0.00	100
		MIN	3.89	100	0.39	100	0.00	100	0.00	100
	2.00	MAX	3.53	100	-3.32	100	0.00	100	0.00	100
		MIN	3.53	100	-3.32	100	0.00	100	0.00	100
	3.00	MAX	3.18	100	-6.68	100	0.00	100	0.00	100
		MIN	3.18	100	-6.68	100	0.00	100	0.00	100
	4.00	MAX	2.83	100	-9.68	100	0.00	100	0.00	100
		MIN	2.83	100	-9.68	100	0.00	100	0.00	100
	5.00	MAX	2.47	100	-12.34	100	0.00	100	0.00	100
		MIN	2.47	100	-12.34	100	0.00	100	0.00	100
	6.00	MAX	2.12	100	-14.63	100	0.00	100	0.00	100
		MIN	2.12	100	-14.63	100	0.00	100	0.00	100
	7.00	MAX	1.77	100	-16.58	100	0.00	100	0.00	100
		MIN	1.77	100	-16.58	100	0.00	100	0.00	100
	8.00	MAX	1.41	100	-18.17	100	0.00	100	0.00	100
		MIN	1.41	100	-18.17	100	0.00	100	0.00	100
	9.00	MAX	1.06	100	-19.40	100	0.00	100	0.00	100
		MIN	1.06	100	-19.40	100	0.00	100	0.00	100
	10.00	MAX	0.71	100	-20.29	100	0.00	100	0.00	100
		MIN	0.71	100	-20.29	100	0.00	100	0.00	100
	11.00	MAX	0.35	100	-20.82	100	0.00	100	0.00	100
		MIN	0.35	100	-20.82	100	0.00	100	0.00	100
	12.00	MAX	0.00	100	-20.99	100	0.00	100	0.00	100
		MIN	0.00	100	-20.99	100	0.00	100	0.00	100

MAX/MIN FORCE VALUES FOR MEMB 4, AMONGST ALL SECT LOCATIONS

	FY/ FZ	DIST DIST	LD LD	MZ/ MY	DIST DIST	LD LD	FX	DIST	LD

MAX.	4.24	0.00	100	4.45	0.00	100				
	0.00	0.00	100	0.00	0.00	100	12.05 C		0.00	100
MIN.	0.00	12.00	100	-20.99	12.00	100				
	0.00	12.00	100	0.00	12.00	100	12.05 C		12.00	100

5	0.00	MAX	4.24	100	4.45	100	0.00	100	0.00	100
		MIN	4.24	100	4.45	100	0.00	100	0.00	100
	1.00	MAX	3.89	100	0.39	100	0.00	100	0.00	100
		MIN	3.89	100	0.39	100	0.00	100	0.00	100
	2.00	MAX	3.53	100	-3.32	100	0.00	100	0.00	100
		MIN	3.53	100	-3.32	100	0.00	100	0.00	100
	3.00	MAX	3.18	100	-6.68	100	0.00	100	0.00	100
		MIN	3.18	100	-6.68	100	0.00	100	0.00	100
	4.00	MAX	2.83	100	-9.68	100	0.00	100	0.00	100
		MIN	2.83	100	-9.68	100	0.00	100	0.00	100
	5.00	MAX	2.47	100	-12.34	100	0.00	100	0.00	100
		MIN	2.47	100	-12.34	100	0.00	100	0.00	100
	6.00	MAX	2.12	100	-14.63	100	0.00	100	0.00	100
		MIN	2.12	100	-14.63	100	0.00	100	0.00	100
	7.00	MAX	1.77	100	-16.58	100	0.00	100	0.00	100
		MIN	1.77	100	-16.58	100	0.00	100	0.00	100
	8.00	MAX	1.41	100	-18.17	100	0.00	100	0.00	100
		MIN	1.41	100	-18.17	100	0.00	100	0.00	100
	9.00	MAX	1.06	100	-19.40	100	0.00	100	0.00	100
		MIN	1.06	100	-19.40	100	0.00	100	0.00	100
	10.00	MAX	0.71	100	-20.29	100	0.00	100	0.00	100
		MIN	0.71	100	-20.29	100	0.00	100	0.00	100
	11.00	MAX	0.35	100	-20.82	100	0.00	100	0.00	100
		MIN	0.35	100	-20.82	100	0.00	100	0.00	100
	12.00	MAX	0.00	100	-20.99	100	0.00	100	0.00	100
		MIN	0.00	100	-20.99	100	0.00	100	0.00	100

MAX/MIN FORCE VALUES FOR MEMB 5, AMONGST ALL SECT LOCATIONS

	FY/ FZ	DIST DIST	LD LD	MZ/ MY	DIST DIST	LD LD	FX	DIST	LD
MAX.	4.24	0.00	100	4.45	0.00	100			
	0.00	0.00	100	0.00	0.00	100	12.05 C	0.00	100
MIN.	0.00	12.00	100	-20.99	12.00	100			
	0.00	12.00	100	0.00	12.00	100	12.05 C	12.00	100

6	0.00	MAX	6.16	100	44.09	100	0.00	100	0.00	100
		MIN	6.16	100	44.09	100	0.00	100	0.00	100
	0.75	MAX	5.85	100	39.57	100	0.00	100	0.00	100
		MIN	5.85	100	39.57	100	0.00	100	0.00	100
	1.50	MAX	5.55	100	35.28	100	0.00	100	0.00	100
		MIN	5.55	100	35.28	100	0.00	100	0.00	100
	2.26	MAX	5.24	100	31.22	100	0.00	100	0.00	100
		MIN	5.24	100	31.22	100	0.00	100	0.00	100
	3.01	MAX	4.95	100	27.39	100	0.00	100	0.00	100

	MIN	4.95	100	27.39	100	0.00	100	0.00	100
3.76	MAX	4.66	100	23.77	100	0.00	100	0.00	100
	MIN	4.66	100	23.77	100	0.00	100	0.00	100
4.51	MAX	4.37	100	20.38	100	0.00	100	0.00	100
	MIN	4.37	100	20.38	100	0.00	100	0.00	100
5.27	MAX	4.08	100	17.20	100	0.00	100	0.00	100
	MIN	4.08	100	17.20	100	0.00	100	0.00	100
6.02	MAX	3.80	100	14.24	100	0.00	100	0.00	100
	MIN	3.80	100	14.24	100	0.00	100	0.00	100
6.77	MAX	3.52	100	11.48	100	0.00	100	0.00	100
	MIN	3.52	100	11.48	100	0.00	100	0.00	100
7.52	MAX	3.25	100	8.94	100	0.00	100	0.00	100
	MIN	3.25	100	8.94	100	0.00	100	0.00	100
8.28	MAX	2.98	100	6.59	100	0.00	100	0.00	100
	MIN	2.98	100	6.59	100	0.00	100	0.00	100
9.03	MAX	2.71	100	4.45	100	0.00	100	0.00	100
	MIN	2.71	100	4.45	100	0.00	100	0.00	100

MAX/MIN FORCE VALUES FOR MEMB 6, AMONGST ALL SECT LOCATIONS

	FY/ FZ	DIST DIST	LD LD	MZ/ MY	DIST DIST	LD LD	FX	DIST	LD
MAX.	6.16	0.00	100	44.09	0.00	100			
	0.00	0.00	100	0.00	0.00	100	12.91 C	0.00	100
MIN.	2.71	9.03	100	4.45	9.03	100			
	0.00	9.03	100	0.00	9.03	100	12.48 C	9.03	100

********** END OF FORCE ENVELOPE FROM INTERNAL STORAGE **********

263. LOAD LIST 101 TO 109
264. PRINT FORCE ENVELOPE NSECTION 4 LIST 1 TO 6

MEMBER FORCE ENVELOPE

ALL UNITS ARE KIP FEET

MEMB	DISTANCE		FY	LD	MZ	LD	FZ	LD	MY	LD
1	0.00	MAX	-1.53	101	0.00	109	0.00	109	0.00	109
		MIN	-6.46	107	0.00	109	0.00	109	0.00	109
	0.38	MAX	-1.52	101	2.48	107	0.00	109	0.00	109
		MIN	-6.45	107	0.59	101	0.00	109	0.00	109
	0.77	MAX	-1.51	101	4.95	107	0.00	109	0.00	109
		MIN	-6.44	107	1.17	101	0.00	109	0.00	109
	1.15	MAX	-1.51	101	7.42	107	0.00	109	0.00	109
		MIN	-6.43	107	1.74	101	0.00	109	0.00	109
	1.53	MAX	-1.51	101	9.89	107	0.00	109	0.00	109
		MIN	-6.43	107	2.32	101	0.00	109	0.00	109
	1.92	MAX	-1.51	101	12.36	107	0.00	109	0.00	109
		MIN	-6.44	107	2.90	101	0.00	109	0.00	109
	2.30	MAX	-1.52	101	14.83	107	0.00	109	0.00	109
		MIN	-6.45	107	3.48	101	0.00	109	0.00	109
	2.69	MAX	-1.53	101	17.30	107	0.00	109	0.00	109
		MIN	-6.46	107	4.07	101	0.00	109	0.00	109
	3.07	MAX	-1.55	101	19.78	107	0.00	109	0.00	109
		MIN	-6.48	107	4.66	101	0.00	109	0.00	109
	3.45	MAX	-1.57	101	22.27	107	0.00	109	0.00	109
		MIN	-6.50	107	5.26	101	0.00	109	0.00	109
	3.84	MAX	-1.60	101	24.77	107	0.00	109	0.00	109
		MIN	-6.53	107	5.86	101	0.00	109	0.00	109
	4.22	MAX	-1.63	101	27.28	107	0.00	109	0.00	109
		MIN	-6.56	107	6.48	101	0.00	109	0.00	109
	4.60	MAX	-1.66	101	29.81	107	0.00	109	0.00	109
		MIN	-6.59	107	7.11	101	0.00	109	0.00	109

MAX/MIN FORCE VALUES FOR MEMB 1, AMONGST ALL SECT LOCATIONS

	FY/ FZ	DIST DIST	LD LD	MZ/ MY	DIST DIST	LD LD	FX	DIST	LD
MAX.	-1.51	1.53	101	29.81	4.60	107			
	0.00	0.00	101	0.00	0.00	101	5.73 C	4.60	105
MIN.	-6.59	4.60	107	0.00	0.00	109			
	0.00	4.60	109	0.00	4.60	109	4.01 C	0.00	109

2	0.00	MAX	-2.14	101	0.00	109	0.00	109	0.00	109
		MIN	-6.49	107	0.00	109	0.00	109	0.00	109
	0.38	MAX	-2.13	101	2.49	107	0.00	109	0.00	109
		MIN	-6.47	107	0.82	101	0.00	109	0.00	109

	0.77	MAX	-2.12	101	4.97	107	0.00	109	0.00	109
		MIN	-6.47	107	1.63	101	0.00	109	0.00	109
	1.15	MAX	-2.11	101	7.45	107	0.00	109	0.00	109
		MIN	-6.46	107	2.44	101	0.00	109	0.00	109
	1.53	MAX	-2.11	101	9.93	107	0.00	109	0.00	109
		MIN	-6.46	107	3.25	101	0.00	109	0.00	109
	1.92	MAX	-2.12	101	12.41	107	0.00	109	0.00	109
		MIN	-6.47	107	4.06	101	0.00	109	0.00	109
	2.30	MAX	-2.13	101	14.89	107	0.00	109	0.00	109
		MIN	-6.47	107	4.88	101	0.00	109	0.00	109
	2.69	MAX	-2.14	101	17.38	107	0.00	109	0.00	109
		MIN	-6.49	107	5.70	101	0.00	109	0.00	109
	3.07	MAX	-2.16	101	19.87	107	0.00	109	0.00	109
		MIN	-6.50	107	6.52	101	0.00	109	0.00	109
	3.45	MAX	-2.18	101	22.37	107	0.00	109	0.00	109
		MIN	-6.53	107	7.35	101	0.00	109	0.00	109
	3.84	MAX	-2.20	101	24.88	107	0.00	109	0.00	109
		MIN	-6.55	107	8.19	101	0.00	109	0.00	109
	4.22	MAX	-2.24	101	27.40	107	0.00	109	0.00	109
		MIN	-6.58	107	9.04	101	0.00	109	0.00	109
	4.60	MAX	-2.27	101	29.93	107	0.00	109	0.00	109
		MIN	-6.62	107	9.91	101	0.00	109	0.00	109

MAX/MIN FORCE VALUES FOR MEMB 2, AMONGST ALL SECT LOCATIONS

	FY/ FZ	DIST DIST	LD LD	MZ/ MY	DIST DIST	LD LD	FX	DIST	LD
MAX.	-2.11	1.53	101	29.93	4.60	107			
	0.00	0.00	101	0.00	0.00	101	5.62 C	4.60	109
MIN.	-6.62	4.60	107	0.00	0.00	109			
	0.00	4.60	109	0.00	4.60	109	1.81 C	0.00	101

3	0.00	MAX	4.80	101	28.25	107	0.00	109	0.00	109
		MIN	2.13	109	5.62	101	0.00	109	0.00	109
	0.75	MAX	4.24	102	26.29	108	0.00	109	0.00	109
		MIN	0.88	101	4.94	101	0.00	109	0.00	109
	1.50	MAX	4.20	102	24.46	108	0.00	109	0.00	109
		MIN	0.84	101	4.29	101	0.00	109	0.00	109
	2.26	MAX	4.15	102	22.67	108	0.00	109	0.00	109
		MIN	0.79	101	2.24	102	0.00	109	0.00	109
	3.01	MAX	4.10	102	20.91	108	0.00	109	0.00	109
		MIN	0.74	101	-0.87	102	0.00	109	0.00	109
	3.76	MAX	4.05	102	19.19	108	0.00	109	0.00	109
		MIN	0.69	101	-3.94	102	0.00	109	0.00	109
	4.51	MAX	3.52	103	17.50	108	0.00	109	0.00	109
		MIN	0.14	102	-4.98	102	0.00	109	0.00	109
	5.27	MAX	3.47	103	16.01	109	0.00	109	0.00	109
		MIN	0.09	102	-5.06	102	0.00	109	0.00	109
	6.02	MAX	3.42	103	14.67	109	0.00	109	0.00	109
		MIN	0.04	102	-5.11	102	0.00	109	0.00	109
	6.77	MAX	3.37	103	13.38	109	0.00	109	0.00	109
		MIN	-0.01	102	-7.19	103	0.00	109	0.00	109

	7.52	MAX	3.33	103	12.12	109	0.00	109	0.00	109
		MIN	-0.06	102	-9.71	103	0.00	109	0.00	109
	8.28	MAX	2.92	104	10.90	109	0.00	109	0.00	109
		MIN	-0.59	103	-11.12	103	0.00	109	0.00	109
	9.03	MAX	2.88	104	9.71	109	0.00	109	0.00	109
		MIN	-0.64	103	-10.66	103	0.00	109	0.00	109

MAX/MIN FORCE VALUES FOR MEMB 3, AMONGST ALL SECT LOCATIONS

	FY/ FZ	DIST DIST	LD LD	MZ/ MY	DIST DIST	LD LD	FX	DIST	LD
MAX.	4.80	0.00	101	28.25	0.00	107			
	0.00	0.00	101	0.00	0.00	101	7.74 C	0.00	107
MIN.	-0.64	9.03	103	-11.12	8.28	103			
	0.00	9.03	109	0.00	9.03	109	2.60 C	9.03	101

4	0.00	MAX	3.60	104	9.71	109	0.00	109	0.00	109
		MIN	-0.03	103	-10.66	103	0.00	109	0.00	109
	1.00	MAX	3.54	104	7.34	109	0.00	109	0.00	109
		MIN	-0.09	103	-11.69	104	0.00	109	0.00	109
	2.00	MAX	3.47	104	5.03	109	0.00	109	0.00	109
		MIN	-0.15	103	-15.19	104	0.00	109	0.00	109
	3.00	MAX	2.99	105	2.79	109	0.00	109	0.00	109
		MIN	-0.49	104	-14.89	104	0.00	109	0.00	109
	4.00	MAX	2.92	105	0.62	109	0.00	109	0.00	109
		MIN	-0.55	104	-14.37	104	0.00	109	0.00	109
	5.00	MAX	2.86	105	-1.50	109	0.00	109	0.00	109
		MIN	-0.62	104	-17.05	105	0.00	109	0.00	109
	6.00	MAX	2.80	105	-3.14	101	0.00	109	0.00	109
		MIN	-0.68	104	-19.88	105	0.00	109	0.00	109
	7.00	MAX	2.29	106	-3.40	101	0.00	109	0.00	109
		MIN	-1.17	105	-18.90	105	0.00	109	0.00	109
	8.00	MAX	2.23	106	-3.60	101	0.00	109	0.00	109
		MIN	-1.23	105	-17.83	106	0.00	109	0.00	109
	9.00	MAX	2.16	106	-3.73	101	0.00	109	0.00	109
		MIN	-1.30	105	-20.03	106	0.00	109	0.00	109
	10.00	MAX	2.10	106	-3.80	101	0.00	109	0.00	109
		MIN	-1.36	105	-22.16	106	0.00	109	0.00	109
	11.00	MAX	1.61	107	-3.81	101	0.00	109	0.00	109
		MIN	-1.87	106	-20.48	106	0.00	109	0.00	109
	12.00	MAX	1.55	107	-3.75	101	0.00	109	0.00	109
		MIN	-1.93	106	-18.82	107	0.00	109	0.00	109

MAX/MIN FORCE VALUES FOR MEMB 4, AMONGST ALL SECT LOCATIONS

	FY/ FZ	DIST DIST	LD LD	MZ/ MY	DIST DIST	LD LD	FX	DIST	LD

MAX.	3.60	0.00	104	9.71	0.00	109			
	0.00	0.00	101	0.00	0.00	101	7.32 C	0.00	107
MIN.	-1.93	12.00	106	-22.16	10.00	106			
	0.00	12.00	109	0.00	12.00	109	2.54 C	12.00	101

5	0.00	MAX	4.01	109	10.19	105	0.00	109	0.00	109
		MIN	0.86	101	-6.30	109	0.00	109	0.00	109
	1.00	MAX	3.95	109	7.96	105	0.00	109	0.00	109
		MIN	0.79	101	-10.27	109	0.00	109	0.00	109
	2.00	MAX	3.44	108	5.96	104	0.00	109	0.00	109
		MIN	-0.02	109	-14.03	109	0.00	109	0.00	109
	3.00	MAX	3.37	108	4.29	104	0.00	109	0.00	109
		MIN	-0.08	109	-13.98	109	0.00	109	0.00	109
	4.00	MAX	3.31	108	2.68	104	0.00	109	0.00	109
		MIN	-0.15	109	-13.87	109	0.00	109	0.00	109
	5.00	MAX	3.25	108	1.38	103	0.00	109	0.00	109
		MIN	-0.21	109	-16.06	108	0.00	109	0.00	109
	6.00	MAX	2.74	107	0.17	103	0.00	109	0.00	109
		MIN	-0.72	108	-19.11	108	0.00	109	0.00	109
	7.00	MAX	2.67	107	-0.97	103	0.00	109	0.00	109
		MIN	-0.78	108	-18.36	108	0.00	109	0.00	109
	8.00	MAX	2.61	107	-1.98	102	0.00	109	0.00	109
		MIN	-0.85	108	-17.55	108	0.00	109	0.00	109
	9.00	MAX	2.55	107	-2.64	102	0.00	109	0.00	109
		MIN	-0.91	108	-19.43	107	0.00	109	0.00	109
	10.00	MAX	2.06	106	-3.24	102	0.00	109	0.00	109
		MIN	-1.42	107	-21.79	107	0.00	109	0.00	109
	11.00	MAX	1.99	106	-3.63	101	0.00	109	0.00	109
		MIN	-1.48	107	-20.34	107	0.00	109	0.00	109
	12.00	MAX	1.93	106	-3.75	101	0.00	109	0.00	109
		MIN	-1.55	107	-18.82	107	0.00	109	0.00	109

MAX/MIN FORCE VALUES FOR MEMB 5, AMONGST ALL SECT LOCATIONS

	FY/ FZ	DIST DIST	LD LD	MZ/ MY	DIST DIST	LD LD	FX	DIST	LD
MAX.	4.01	0.00	109	10.19	0.00	105			
	0.00	0.00	101	0.00	0.00	101	7.32 C	0.00	107
MIN.	-1.55	12.00	107	-21.79	10.00	107			
	0.00	12.00	109	0.00	12.00	109	2.54 C	12.00	101

6	0.00	MAX	3.72	109	28.42	107	0.00	109	0.00	109
		MIN	1.11	101	9.34	101	0.00	109	0.00	109
	0.75	MAX	3.67	109	26.36	107	0.00	109	0.00	109
		MIN	1.06	101	8.53	101	0.00	109	0.00	109
	1.50	MAX	3.63	109	24.49	106	0.00	109	0.00	109
		MIN	1.01	101	7.75	101	0.00	109	0.00	109
	2.26	MAX	3.58	109	22.80	106	0.00	109	0.00	109
		MIN	0.97	101	7.00	101	0.00	109	0.00	109
	3.01	MAX	3.53	109	21.14	106	0.00	109	0.00	109

	MIN	0.92	101	6.29	101	0.00	109	0.00	109
3.76	MAX	3.48	109	19.52	106	0.00	109	0.00	109
	MIN	0.87	101	5.62	101	0.00	109	0.00	109
4.51	MAX	3.44	109	17.94	106	0.00	109	0.00	109
	MIN	0.82	101	4.99	101	0.00	109	0.00	109
5.27	MAX	3.39	109	16.39	106	0.00	109	0.00	109
	MIN	0.77	101	4.38	101	0.00	109	0.00	109
6.02	MAX	3.34	109	14.88	106	0.00	109	0.00	109
	MIN	0.73	101	3.47	109	0.00	109	0.00	109
6.77	MAX	3.29	109	13.58	105	0.00	109	0.00	109
	MIN	0.68	101	0.97	109	0.00	109	0.00	109
7.52	MAX	3.24	109	12.41	105	0.00	109	0.00	109
	MIN	0.63	101	-1.49	109	0.00	109	0.00	109
8.28	MAX	3.20	109	11.28	105	0.00	109	0.00	109
	MIN	0.58	101	-3.91	109	0.00	109	0.00	109
9.03	MAX	3.15	109	10.19	105	0.00	109	0.00	109
	MIN	0.54	101	-6.30	109	0.00	109	0.00	109

MAX/MIN FORCE VALUES FOR MEMB 6, AMONGST ALL SECT LOCATIONS

	FY/ FZ	DIST DIST	LD LD	MZ/ MY	DIST DIST	LD LD	FX	DIST	LD
MAX.	3.72	0.00	109	28.42	0.00	107			
	0.00	0.00	101	0.00	0.00	101	7.72 C	0.00	107
MIN.	0.54	9.03	101	-6.30	9.03	109			
	0.00	9.03	109	0.00	9.03	109	2.62 C	9.03	101

********** END OF FORCE ENVELOPE FROM INTERNAL STORAGE **********

265. LOAD LIST 201 TO 209
266. PRINT FORCE ENVELOPE NSECTION 4 LIST 1 TO 6

MEMBER FORCE ENVELOPE

ALL UNITS ARE KIP FEET

MEMB	DISTANCE		FY	LD	MZ	LD	FZ	LD	MY	LD
1	0.00	MAX	-1.53	201	0.00	209	0.00	209	0.00	209
		MIN	-9.13	208	0.00	209	0.00	209	0.00	209
	0.38	MAX	-1.52	201	3.50	208	0.00	209	0.00	209
		MIN	-9.11	208	0.59	201	0.00	209	0.00	209
	0.77	MAX	-1.51	201	6.99	208	0.00	209	0.00	209
		MIN	-9.10	208	1.17	201	0.00	209	0.00	209
	1.15	MAX	-1.51	201	10.48	208	0.00	209	0.00	209
		MIN	-9.10	208	1.74	201	0.00	209	0.00	209
	1.53	MAX	-1.51	201	13.98	208	0.00	209	0.00	209
		MIN	-9.10	208	2.32	201	0.00	209	0.00	209
	1.92	MAX	-1.51	201	17.47	208	0.00	209	0.00	209
		MIN	-9.10	208	2.90	201	0.00	209	0.00	209
	2.30	MAX	-1.52	201	20.96	208	0.00	209	0.00	209
		MIN	-9.11	208	3.48	201	0.00	209	0.00	209
	2.69	MAX	-1.53	201	24.46	208	0.00	209	0.00	209
		MIN	-9.12	208	4.07	201	0.00	209	0.00	209
	3.07	MAX	-1.55	201	27.96	208	0.00	209	0.00	209
		MIN	-9.14	208	4.66	201	0.00	209	0.00	209
	3.45	MAX	-1.57	201	31.48	208	0.00	209	0.00	209
		MIN	-9.16	208	5.26	201	0.00	209	0.00	209
	3.84	MAX	-1.60	201	35.00	208	0.00	209	0.00	209
		MIN	-9.19	208	5.86	201	0.00	209	0.00	209
	4.22	MAX	-1.63	201	38.53	208	0.00	209	0.00	209
		MIN	-9.22	208	6.48	201	0.00	209	0.00	209
	4.60	MAX	-1.66	201	42.08	208	0.00	209	0.00	209
		MIN	-9.26	208	7.11	201	0.00	209	0.00	209

MAX/MIN FORCE VALUES FOR MEMB 1, AMONGST ALL SECT LOCATIONS

	FY/ FZ	DIST DIST	LD LD	MZ/ MY	DIST DIST	LD LD	FX	DIST	LD
MAX.	-1.51	1.53	201	42.08	4.60	208			
	0.00	0.00	201	0.00	0.00	201	8.65 C	4.60	204
MIN.	-9.26	4.60	208	0.00	0.00	209			
	0.00	4.60	209	0.00	4.60	209	5.13 C	0.00	203

2	0.00	MAX	-2.14	201	0.00	209	0.00	209	0.00	209
		MIN	-9.14	207	0.00	209	0.00	209	0.00	209
	0.38	MAX	-2.13	201	3.50	207	0.00	209	0.00	209
		MIN	-9.13	207	0.82	201	0.00	209	0.00	209

	0.77	MAX	-2.12	201	7.00	207	0.00	209	0.00	209
		MIN	-9.12	207	1.63	201	0.00	209	0.00	209
	1.15	MAX	-2.11	201	10.50	207	0.00	209	0.00	209
		MIN	-9.11	207	2.44	201	0.00	209	0.00	209
	1.53	MAX	-2.11	201	14.00	207	0.00	209	0.00	209
		MIN	-9.11	207	3.25	201	0.00	209	0.00	209
	1.92	MAX	-2.12	201	17.50	207	0.00	209	0.00	209
		MIN	-9.12	207	4.06	201	0.00	209	0.00	209
	2.30	MAX	-2.13	201	21.00	207	0.00	209	0.00	209
		MIN	-9.13	207	4.88	201	0.00	209	0.00	209
	2.69	MAX	-2.14	201	24.50	207	0.00	209	0.00	209
		MIN	-9.14	207	5.70	201	0.00	209	0.00	209
	3.07	MAX	-2.16	201	28.01	207	0.00	209	0.00	209
		MIN	-9.16	207	6.52	201	0.00	209	0.00	209
	3.45	MAX	-2.18	201	31.53	207	0.00	209	0.00	209
		MIN	-9.18	207	7.35	201	0.00	209	0.00	209
	3.84	MAX	-2.20	201	35.05	207	0.00	209	0.00	209
		MIN	-9.21	207	8.19	201	0.00	209	0.00	209
	4.22	MAX	-2.24	201	38.59	207	0.00	209	0.00	209
		MIN	-9.24	207	9.04	201	0.00	209	0.00	209
	4.60	MAX	-2.27	201	42.14	207	0.00	209	0.00	209
		MIN	-9.27	207	9.91	201	0.00	209	0.00	209

MAX/MIN FORCE VALUES FOR MEMB 2, AMONGST ALL SECT LOCATIONS

	FY/ FZ	DIST DIST	LD LD	MZ/ MY	DIST DIST	LD LD	FX	DIST	LD
MAX.	-2.11	1.53	201	42.14	4.60	207			
	0.00	0.00	201	0.00	0.00	201	8.74 C	4.60	209
MIN.	-9.27	4.60	207	0.00	0.00	209			
	0.00	4.60	209	0.00	4.60	209	1.81 C	0.00	201

3	0.00	MAX	6.73	204	39.99	208	0.00	209	0.00	209
		MIN	2.94	209	5.62	201	0.00	209	0.00	209
	0.75	MAX	6.68	204	37.19	208	0.00	209	0.00	209
		MIN	0.88	201	4.94	201	0.00	209	0.00	209
	1.50	MAX	5.51	205	34.43	208	0.00	209	0.00	209
		MIN	0.84	201	4.29	201	0.00	209	0.00	209
	2.26	MAX	5.46	205	31.69	208	0.00	209	0.00	209
		MIN	0.79	201	3.68	201	0.00	209	0.00	209
	3.01	MAX	5.42	205	29.00	208	0.00	209	0.00	209
		MIN	0.74	201	0.93	202	0.00	209	0.00	209
	3.76	MAX	5.37	205	26.34	208	0.00	209	0.00	209
		MIN	0.69	201	-2.04	202	0.00	209	0.00	209
	4.51	MAX	5.32	205	23.72	208	0.00	209	0.00	209
		MIN	0.65	201	-4.98	202	0.00	209	0.00	209
	5.27	MAX	5.27	205	21.13	208	0.00	209	0.00	209
		MIN	-0.04	202	-6.85	202	0.00	209	0.00	209
	6.02	MAX	4.31	206	18.70	209	0.00	209	0.00	209
		MIN	-0.08	202	-6.80	202	0.00	209	0.00	209
	6.77	MAX	4.26	206	16.80	209	0.00	209	0.00	209
		MIN	-0.13	202	-6.72	202	0.00	209	0.00	209

	7.52	MAX	4.21	206	14.93	209	0.00	209	0.00	209
		MIN	-0.18	202	-7.52	203	0.00	209	0.00	209
	8.28	MAX	4.17	206	13.09	209	0.00	209	0.00	209
		MIN	-0.23	202	-9.91	203	0.00	209	0.00	209
	9.03	MAX	4.12	206	11.29	209	0.00	209	0.00	209
		MIN	-0.28	202	-12.27	203	0.00	209	0.00	209

MAX/MIN FORCE VALUES FOR MEMB 3, AMONGST ALL SECT LOCATIONS

	FY/ FZ	DIST DIST	LD LD	MZ/ MY	DIST DIST	LD LD	FX	DIST	LD
MAX.	6.73	0.00	204	39.99	0.00	208			
	0.00	0.00	201	0.00	0.00	201	10.97 C	0.00	207
MIN.	-0.28	9.03	202	-12.27	9.03	203			
	0.00	9.03	209	0.00	9.03	209	2.60 C	9.03	201

4	0.00	MAX	5.37	206	11.29	209	0.00	209	0.00	209
		MIN	0.24	202	-12.27	203	0.00	209	0.00	209
	1.00	MAX	5.31	206	7.82	209	0.00	209	0.00	209
		MIN	-0.18	203	-12.27	203	0.00	209	0.00	209
	2.00	MAX	4.29	207	4.42	209	0.00	209	0.00	209
		MIN	-0.25	203	-12.05	203	0.00	209	0.00	209
	3.00	MAX	4.23	207	2.01	209	0.00	209	0.00	209
		MIN	-0.31	203	-14.04	204	0.00	209	0.00	209
	4.00	MAX	4.16	207	-0.29	209	0.00	209	0.00	209
		MIN	-0.38	203	-16.98	204	0.00	209	0.00	209
	5.00	MAX	4.10	207	-2.53	209	0.00	209	0.00	209
		MIN	-0.44	203	-19.85	204	0.00	209	0.00	209
	6.00	MAX	4.03	207	-3.14	201	0.00	209	0.00	209
		MIN	-1.12	204	-18.91	204	0.00	209	0.00	209
	7.00	MAX	3.05	208	-3.40	201	0.00	209	0.00	209
		MIN	-1.19	204	-18.70	207	0.00	209	0.00	209
	8.00	MAX	2.99	208	-3.60	201	0.00	209	0.00	209
		MIN	-1.25	204	-20.48	205	0.00	209	0.00	209
	9.00	MAX	2.93	208	-3.73	201	0.00	209	0.00	209
		MIN	-1.32	204	-22.21	205	0.00	209	0.00	209
	10.00	MAX	2.86	208	-3.80	201	0.00	209	0.00	209
		MIN	-1.38	204	-23.88	205	0.00	209	0.00	209
	11.00	MAX	2.80	208	-3.81	201	0.00	209	0.00	209
		MIN	-2.33	205	-23.94	208	0.00	209	0.00	209
	12.00	MAX	1.76	209	-3.75	201	0.00	209	0.00	209
		MIN	-2.39	205	-22.97	208	0.00	209	0.00	209

MAX/MIN FORCE VALUES FOR MEMB 4, AMONGST ALL SECT LOCATIONS

	FY/ FZ	DIST DIST	LD LD	MZ/ MY	DIST DIST	LD LD	FX	DIST	LD

MAX.		5.37	0.00	206	11.29	0.00	209			
		0.00	0.00	201	0.00	0.00	201	10.30 C	0.00	207
MIN.		-2.39	12.00	205	-23.94	11.00	208			
		0.00	12.00	209	0.00	12.00	209	2.54 C	12.00	201

5	0.00	MAX	4.92	207	13.95	205	0.00	209	0.00	209
		MIN	0.86	201	-4.36	208	0.00	209	0.00	209
	1.00	MAX	4.85	207	10.83	205	0.00	209	0.00	209
		MIN	0.79	201	-6.26	208	0.00	209	0.00	209
	2.00	MAX	4.79	207	7.76	205	0.00	209	0.00	209
		MIN	0.73	201	-8.10	208	0.00	209	0.00	209
	3.00	MAX	4.73	207	5.16	204	0.00	209	0.00	209
		MIN	0.66	201	-10.31	209	0.00	209	0.00	209
	4.00	MAX	3.71	206	3.11	204	0.00	209	0.00	209
		MIN	0.60	201	-14.19	207	0.00	209	0.00	209
	5.00	MAX	3.64	206	1.41	203	0.00	209	0.00	209
		MIN	0.54	201	-15.61	209	0.00	209	0.00	209
	6.00	MAX	3.58	206	0.11	203	0.00	209	0.00	209
		MIN	0.47	201	-18.17	209	0.00	209	0.00	209
	7.00	MAX	3.52	206	-1.07	202	0.00	209	0.00	209
		MIN	0.41	201	-20.66	209	0.00	209	0.00	209
	8.00	MAX	3.45	206	-1.89	202	0.00	209	0.00	209
		MIN	-1.50	209	-22.94	209	0.00	209	0.00	209
	9.00	MAX	2.59	205	-2.64	202	0.00	209	0.00	209
		MIN	-1.57	209	-21.62	206	0.00	209	0.00	209
	10.00	MAX	2.52	205	-3.33	202	0.00	209	0.00	209
		MIN	-1.63	209	-21.08	206	0.00	209	0.00	209
	11.00	MAX	2.46	205	-3.63	201	0.00	209	0.00	209
		MIN	-1.70	209	-21.77	208	0.00	209	0.00	209
	12.00	MAX	2.39	205	-3.75	201	0.00	209	0.00	209
		MIN	-1.76	209	-22.97	208	0.00	209	0.00	209

MAX/MIN FORCE VALUES FOR MEMB 5, AMONGST ALL SECT LOCATIONS

	FY/ FZ	DIST DIST	LD LD	MZ/ MY	DIST DIST	LD LD	FX	DIST	LD
MAX.	4.92	0.00	207	13.95	0.00	205			
	0.00	0.00	201	0.00	0.00	201	10.30 C	0.00	207
MIN.	-1.76	12.00	209	-22.97	12.00	208			
	0.00	12.00	209	0.00	12.00	209	2.54 C	12.00	201

6	0.00	MAX	6.22	209	39.94	207	0.00	209	0.00	209
		MIN	1.11	201	9.34	201	0.00	209	0.00	209
	0.75	MAX	6.17	209	36.82	207	0.00	209	0.00	209
		MIN	1.06	201	8.53	201	0.00	209	0.00	209
	1.50	MAX	6.13	209	33.73	207	0.00	209	0.00	209
		MIN	1.01	201	7.75	201	0.00	209	0.00	209
	2.26	MAX	6.08	209	31.21	206	0.00	209	0.00	209
		MIN	0.97	201	7.00	201	0.00	209	0.00	209
	3.01	MAX	6.03	209	28.86	206	0.00	209	0.00	209

	MIN	0.92	201	6.29	201	0.00	209	0.00	209
3.76	MAX	5.98	209	26.54	206	0.00	209	0.00	209
	MIN	0.87	201	5.62	201	0.00	209	0.00	209
4.51	MAX	4.81	208	24.26	206	0.00	209	0.00	209
	MIN	0.82	201	4.99	201	0.00	209	0.00	209
5.27	MAX	4.76	208	22.10	205	0.00	209	0.00	209
	MIN	0.77	201	4.38	201	0.00	209	0.00	209
6.02	MAX	4.71	208	20.40	205	0.00	209	0.00	209
	MIN	0.73	201	3.77	209	0.00	209	0.00	209
6.77	MAX	4.67	208	18.73	205	0.00	209	0.00	209
	MIN	0.68	201	2.31	209	0.00	209	0.00	209
7.52	MAX	4.62	208	17.10	205	0.00	209	0.00	209
	MIN	0.63	201	0.88	209	0.00	209	0.00	209
8.28	MAX	4.57	208	15.51	205	0.00	209	0.00	209
	MIN	0.58	201	-1.37	208	0.00	209	0.00	209
9.03	MAX	3.60	207	13.95	205	0.00	209	0.00	209
	MIN	0.54	201	-4.36	208	0.00	209	0.00	209

MAX/MIN FORCE VALUES FOR MEMB 6, AMONGST ALL SECT LOCATIONS

	FY/ FZ	DIST DIST	LD LD	MZ/ MY	DIST DIST	LD LD	FX	DIST	LD
MAX.	6.22	0.00	209	39.94	0.00	207			
	0.00	0.00	201	0.00	0.00	201	10.93 C	0.00	208
MIN.	0.54	9.03	201	-4.36	9.03	208			
	0.00	9.03	209	0.00	9.03	209	2.62 C	9.03	201

********** END OF FORCE ENVELOPE FROM INTERNAL STORAGE **********

267. LOAD LIST 301 TO 307
268. PRINT FORCE ENVELOPE NSECTION 4 LIST 1 TO 6

MEMBER FORCE ENVELOPE

ALL UNITS ARE KIP FEET

MEMB	DISTANCE		FY	LD	MZ	LD	FZ	LD	MY	LD
1	0.00	MAX	-1.59	301	0.00	307	0.00	307	0.00	307
		MIN	-8.07	307	0.00	307	0.00	307	0.00	307
	0.38	MAX	-1.58	301	3.09	307	0.00	307	0.00	307
		MIN	-8.05	307	0.61	301	0.00	307	0.00	307
	0.77	MAX	-1.57	301	6.18	307	0.00	307	0.00	307
		MIN	-8.05	307	1.21	301	0.00	307	0.00	307
	1.15	MAX	-1.56	301	9.27	307	0.00	307	0.00	307
		MIN	-8.04	307	1.81	301	0.00	307	0.00	307
	1.53	MAX	-1.56	301	12.35	307	0.00	307	0.00	307
		MIN	-8.04	307	2.41	301	0.00	307	0.00	307
	1.92	MAX	-1.57	301	15.44	307	0.00	307	0.00	307
		MIN	-8.05	307	3.01	301	0.00	307	0.00	307
	2.30	MAX	-1.58	301	18.53	307	0.00	307	0.00	307
		MIN	-8.05	307	3.62	301	0.00	307	0.00	307
	2.69	MAX	-1.59	301	21.62	307	0.00	307	0.00	307
		MIN	-8.07	307	4.22	301	0.00	307	0.00	307
	3.07	MAX	-1.61	301	24.72	307	0.00	307	0.00	307
		MIN	-8.09	307	4.84	301	0.00	307	0.00	307
	3.45	MAX	-1.63	301	27.83	307	0.00	307	0.00	307
		MIN	-8.11	307	5.46	301	0.00	307	0.00	307
	3.84	MAX	-1.66	301	30.94	307	0.00	307	0.00	307
		MIN	-8.13	307	6.09	301	0.00	307	0.00	307
	4.22	MAX	-1.69	301	34.07	307	0.00	307	0.00	307
		MIN	-8.16	307	6.73	301	0.00	307	0.00	307
	4.60	MAX	-1.72	301	37.21	307	0.00	307	0.00	307
		MIN	-8.20	307	7.39	301	0.00	307	0.00	307

MAX/MIN FORCE VALUES FOR MEMB 1, AMONGST ALL SECT LOCATIONS

	FY/ FZ	DIST DIST	LD LD	MZ/ MY	DIST DIST	LD LD	FX	DIST	LD
MAX.	-1.56	1.53	301	37.21	4.60	307			
	0.00	0.00	301	0.00	0.00	301	7.55 C	4.60	302
MIN.	-8.20	4.60	307	0.00	0.00	307			
	0.00	4.60	307	0.00	4.60	307	4.65 C	0.00	301

2	0.00	MAX	-2.07	301	0.00	307	0.00	307	0.00	307
		MIN	-8.07	307	0.00	307	0.00	307	0.00	307
	0.38	MAX	-2.05	301	3.09	307	0.00	307	0.00	307
		MIN	-8.05	307	0.79	301	0.00	307	0.00	307

	0.77	MAX	-2.04	301	6.18	307	0.00	307	0.00	307
		MIN	-8.04	307	1.58	301	0.00	307	0.00	307
	1.15	MAX	-2.04	301	9.27	307	0.00	307	0.00	307
		MIN	-8.04	307	2.36	301	0.00	307	0.00	307
	1.53	MAX	-2.04	301	12.35	307	0.00	307	0.00	307
		MIN	-8.04	307	3.14	301	0.00	307	0.00	307
	1.92	MAX	-2.04	301	15.44	307	0.00	307	0.00	307
		MIN	-8.04	307	3.92	301	0.00	307	0.00	307
	2.30	MAX	-2.05	301	18.52	307	0.00	307	0.00	307
		MIN	-8.05	307	4.71	301	0.00	307	0.00	307
	2.69	MAX	-2.06	301	21.62	307	0.00	307	0.00	307
		MIN	-8.07	307	5.50	301	0.00	307	0.00	307
	3.07	MAX	-2.08	301	24.71	307	0.00	307	0.00	307
		MIN	-8.08	307	6.29	301	0.00	307	0.00	307
	3.45	MAX	-2.10	301	27.82	307	0.00	307	0.00	307
		MIN	-8.11	307	7.10	301	0.00	307	0.00	307
	3.84	MAX	-2.13	301	30.94	307	0.00	307	0.00	307
		MIN	-8.13	307	7.91	301	0.00	307	0.00	307
	4.22	MAX	-2.16	301	34.06	307	0.00	307	0.00	307
		MIN	-8.16	307	8.73	301	0.00	307	0.00	307
	4.60	MAX	-2.20	301	37.20	307	0.00	307	0.00	307
		MIN	-8.20	307	9.57	301	0.00	307	0.00	307

MAX/MIN FORCE VALUES FOR MEMB 2, AMONGST ALL SECT LOCATIONS

	FY/ FZ	DIST DIST	LD LD	MZ/ MY	DIST DIST	LD LD	FX	DIST	LD
MAX.	-2.04	1.53	301	37.20	4.60	307			
	0.00	0.00	301	0.00	0.00	301	5.81 C	4.60	307
MIN.	-8.20	4.60	307	0.00	0.00	307			
	0.00	4.60	307	0.00	4.60	307	1.78 C	0.00	301

3	0.00	MAX	6.51	302	35.39	307	0.00	307	0.00	307
		MIN	3.24	307	6.11	301	0.00	307	0.00	307
	0.75	MAX	5.68	303	32.97	307	0.00	307	0.00	307
		MIN	0.91	301	5.40	301	0.00	307	0.00	307
	1.50	MAX	5.63	303	30.59	307	0.00	307	0.00	307
		MIN	0.87	301	3.99	302	0.00	307	0.00	307
	2.26	MAX	5.59	303	28.25	307	0.00	307	0.00	307
		MIN	0.82	301	1.46	302	0.00	307	0.00	307
	3.01	MAX	5.54	303	25.94	307	0.00	307	0.00	307
		MIN	0.77	301	-1.04	302	0.00	307	0.00	307
	3.76	MAX	5.49	303	23.66	307	0.00	307	0.00	307
		MIN	0.72	301	-3.50	302	0.00	307	0.00	307
	4.51	MAX	4.78	304	21.43	307	0.00	307	0.00	307
		MIN	0.17	302	-5.51	303	0.00	307	0.00	307
	5.27	MAX	4.74	304	19.23	307	0.00	307	0.00	307
		MIN	0.12	302	-7.31	303	0.00	307	0.00	307
	6.02	MAX	4.69	304	17.06	307	0.00	307	0.00	307
		MIN	0.08	302	-9.08	303	0.00	307	0.00	307
	6.77	MAX	4.64	304	14.93	307	0.00	307	0.00	307
		MIN	0.03	302	-10.81	303	0.00	307	0.00	307

7.52	MAX	4.59	304	12.84	307	0.00	307	0.00	307
	MIN	-0.02	302	-12.50	303	0.00	307	0.00	307
8.28	MAX	3.93	305	10.78	307	0.00	307	0.00	307
	MIN	-0.85	303	-14.02	304	0.00	307	0.00	307
9.03	MAX	3.88	305	8.76	307	0.00	307	0.00	307
	MIN	-0.90	303	-15.15	304	0.00	307	0.00	307

MAX/MIN FORCE VALUES FOR MEMB 3, AMONGST ALL SECT LOCATIONS

	FY/ FZ	DIST DIST	LD LD	MZ/ MY	DIST DIST	LD LD	FX	DIST	LD
MAX.	6.51	0.00	302	35.39	0.00	307			
	0.00	0.00	301	0.00	0.00	301	9.51 C	0.00	307
MIN.	-0.90	9.03	303	-15.15	9.03	304			
	0.00	9.03	307	0.00	9.03	307	2.53 C	9.03	301

4	0.00	MAX	4.92	305	8.76	307	0.00	307	0.00	307
		MIN	-0.20	303	-15.15	304	0.00	307	0.00	307
	1.00	MAX	4.86	305	4.98	307	0.00	307	0.00	307
		MIN	-0.26	303	-17.48	304	0.00	307	0.00	307
	2.00	MAX	4.80	305	1.26	307	0.00	307	0.00	307
		MIN	-0.33	303	-19.75	304	0.00	307	0.00	307
	3.00	MAX	4.18	306	-1.79	301	0.00	307	0.00	307
		MIN	-0.88	304	-19.24	305	0.00	307	0.00	307
	4.00	MAX	4.11	306	-2.27	301	0.00	307	0.00	307
		MIN	-0.94	304	-20.89	305	0.00	307	0.00	307
	5.00	MAX	4.05	306	-2.68	301	0.00	307	0.00	307
		MIN	-1.01	304	-22.48	305	0.00	307	0.00	307
	6.00	MAX	3.98	306	-3.03	301	0.00	307	0.00	307
		MIN	-1.07	304	-24.00	305	0.00	307	0.00	307
	7.00	MAX	3.36	307	-3.31	301	0.00	307	0.00	307
		MIN	-1.62	305	-24.19	306	0.00	307	0.00	307
	8.00	MAX	3.30	307	-3.53	301	0.00	307	0.00	307
		MIN	-1.69	305	-25.02	306	0.00	307	0.00	307
	9.00	MAX	3.24	307	-3.68	301	0.00	307	0.00	307
		MIN	-1.75	305	-25.80	306	0.00	307	0.00	307
	10.00	MAX	3.17	307	-3.77	301	0.00	307	0.00	307
		MIN	-1.82	305	-26.51	306	0.00	307	0.00	307
	11.00	MAX	0.06	307	-3.80	301	0.00	307	0.00	307
		MIN	-2.44	306	-26.38	307	0.00	307	0.00	307
	12.00	MAX	-0.01	307	-3.76	301	0.00	307	0.00	307
		MIN	-2.50	306	-26.40	307	0.00	307	0.00	307

MAX/MIN FORCE VALUES FOR MEMB 4, AMONGST ALL SECT LOCATIONS

FY/ FZ	DIST DIST	LD LD	MZ/ MY	DIST DIST	LD LD	FX	DIST	LD

MAX.	4.92	0.00	305	8.76	0.00	307			
	0.00	0.00	301	0.00	0.00	301	9.04 C	0.00	307
MIN.	-2.50	12.00	306	-26.51	10.00	306			
	0.00	12.00	307	0.00	12.00	307	2.46 C	12.00	301

5	0.00	MAX	3.82	307	14.33	305	0.00	307	0.00	307
		MIN	0.84	301	1.68	301	0.00	307	0.00	307
	1.00	MAX	3.76	307	11.65	305	0.00	307	0.00	307
		MIN	0.77	301	0.88	301	0.00	307	0.00	307
	2.00	MAX	3.70	307	9.21	304	0.00	307	0.00	307
		MIN	0.71	301	0.13	301	0.00	307	0.00	307
	3.00	MAX	3.63	307	7.15	304	0.00	307	0.00	307
		MIN	0.65	301	-2.53	307	0.00	307	0.00	307
	4.00	MAX	3.57	307	5.15	304	0.00	307	0.00	307
		MIN	0.58	301	-6.13	307	0.00	307	0.00	307
	5.00	MAX	3.50	307	3.22	304	0.00	307	0.00	307
		MIN	0.52	301	-9.67	307	0.00	307	0.00	307
	6.00	MAX	3.44	307	1.35	304	0.00	307	0.00	307
		MIN	0.45	301	-13.14	307	0.00	307	0.00	307
	7.00	MAX	3.38	307	-0.05	303	0.00	307	0.00	307
		MIN	0.39	301	-16.55	307	0.00	307	0.00	307
	8.00	MAX	3.31	307	-1.31	303	0.00	307	0.00	307
		MIN	0.33	301	-19.89	307	0.00	307	0.00	307
	9.00	MAX	3.25	307	-2.50	303	0.00	307	0.00	307
		MIN	0.26	301	-23.17	307	0.00	307	0.00	307
	10.00	MAX	2.63	306	-3.17	302	0.00	307	0.00	307
		MIN	0.13	307	-26.26	307	0.00	307	0.00	307
	11.00	MAX	2.56	306	-3.66	301	0.00	307	0.00	307
		MIN	0.07	307	-26.37	307	0.00	307	0.00	307
	12.00	MAX	2.50	306	-3.76	301	0.00	307	0.00	307
		MIN	0.01	307	-26.40	307	0.00	307	0.00	307

MAX/MIN FORCE VALUES FOR MEMB 5, AMONGST ALL SECT LOCATIONS

	FY/ FZ	DIST DIST	LD LD	MZ/ MY	DIST DIST	LD LD	FX	DIST	LD
MAX.	3.82	0.00	307	14.33	0.00	305			
	0.00	0.00	301	0.00	0.00	301	9.04 C	0.00	307
MIN.	0.01	12.00	307	-26.40	12.00	307			
	0.00	12.00	307	0.00	12.00	307	2.46 C	12.00	301

6	0.00	MAX	3.25	307	35.38	307	0.00	307	0.00	307
		MIN	1.10	301	9.02	301	0.00	307	0.00	307
	0.75	MAX	3.20	307	32.95	307	0.00	307	0.00	307
		MIN	1.05	301	8.21	301	0.00	307	0.00	307
	1.50	MAX	3.15	307	30.84	306	0.00	307	0.00	307
		MIN	1.00	301	7.44	301	0.00	307	0.00	307
	2.26	MAX	3.10	307	28.88	306	0.00	307	0.00	307
		MIN	0.96	301	6.70	301	0.00	307	0.00	307
	3.01	MAX	3.06	307	26.95	306	0.00	307	0.00	307

	MIN	0.91	301	6.00	301	0.00	307	0.00	307
3.76	MAX	3.01	307	25.07	306	0.00	307	0.00	307
	MIN	0.86	301	5.33	301	0.00	307	0.00	307
4.51	MAX	2.96	307	23.21	306	0.00	307	0.00	307
	MIN	0.81	301	4.70	301	0.00	307	0.00	307
5.27	MAX	2.91	307	21.40	306	0.00	307	0.00	307
	MIN	0.76	301	4.11	301	0.00	307	0.00	307
6.02	MAX	2.86	307	19.71	305	0.00	307	0.00	307
	MIN	0.72	301	3.55	301	0.00	307	0.00	307
6.77	MAX	2.82	307	18.31	305	0.00	307	0.00	307
	MIN	0.67	301	3.03	301	0.00	307	0.00	307
7.52	MAX	2.77	307	16.95	305	0.00	307	0.00	307
	MIN	0.62	301	2.54	301	0.00	307	0.00	307
8.28	MAX	2.72	307	15.62	305	0.00	307	0.00	307
	MIN	0.57	301	2.09	301	0.00	307	0.00	307
9.03	MAX	2.67	307	14.33	305	0.00	307	0.00	307
	MIN	0.53	301	1.68	301	0.00	307	0.00	307

MAX/MIN FORCE VALUES FOR MEMB 6, AMONGST ALL SECT LOCATIONS

	FY/ FZ	DIST DIST	LD LD	MZ/ MY	DIST DIST	LD LD	FX	DIST	LD
MAX.	3.25	0.00	307	35.38	0.00	307			
	0.00	0.00	301	0.00	0.00	301	9.51 C	0.00	307
MIN.	0.53	9.03	301	1.68	9.03	301			
	0.00	9.03	307	0.00	9.03	307	2.55 C	9.03	301

********** END OF FORCE ENVELOPE FROM INTERNAL STORAGE **********

269. LOAD LIST 401 TO 408
270. PRINT FORCE ENVELOPE NSECTION 4 LIST 1 TO 6

MEMBER FORCE ENVELOPE

ALL UNITS ARE KIP FEET

MEMB	DISTANCE		FY	LD	MZ	LD	FZ	LD	MY	LD
1	0.00	MAX	0.17	401	0.00	408	0.00	408	0.00	408
		MIN	-4.96	407	0.00	408	0.00	408	0.00	408
	0.38	MAX	0.18	401	1.90	407	0.00	408	0.00	408
		MIN	-4.95	407	-0.07	401	0.00	408	0.00	408
	0.77	MAX	0.19	401	3.80	407	0.00	408	0.00	408
		MIN	-4.94	407	-0.14	401	0.00	408	0.00	408
	1.15	MAX	0.19	401	5.69	407	0.00	408	0.00	408
		MIN	-4.93	407	-0.21	401	0.00	408	0.00	408
	1.53	MAX	0.19	401	7.58	407	0.00	408	0.00	408
		MIN	-4.93	407	-0.29	401	0.00	408	0.00	408
	1.92	MAX	0.19	401	9.47	407	0.00	408	0.00	408
		MIN	-4.94	407	-0.36	401	0.00	408	0.00	408
	2.30	MAX	0.18	401	11.37	407	0.00	408	0.00	408
		MIN	-4.95	407	-0.43	401	0.00	408	0.00	408
	2.69	MAX	0.17	401	13.27	407	0.00	408	0.00	408
		MIN	-4.96	407	-0.50	401	0.00	408	0.00	408
	3.07	MAX	0.15	401	15.18	407	0.00	408	0.00	408
		MIN	-4.98	407	-0.56	401	0.00	408	0.00	408
	3.45	MAX	0.13	401	17.09	407	0.00	408	0.00	408
		MIN	-5.00	407	-0.61	401	0.00	408	0.00	408
	3.84	MAX	0.10	401	19.01	407	0.00	408	0.00	408
		MIN	-5.02	407	-0.65	401	0.00	408	0.00	408
	4.22	MAX	0.07	401	20.95	407	0.00	408	0.00	408
		MIN	-5.06	407	-0.69	401	0.00	408	0.00	408
	4.60	MAX	0.03	401	22.89	407	0.00	408	0.00	408
		MIN	-5.09	407	-0.71	401	0.00	408	0.00	408

MAX/MIN FORCE VALUES FOR MEMB 1, AMONGST ALL SECT LOCATIONS

	FY/ FZ	DIST DIST	LD LD	MZ/ MY	DIST DIST	LD LD	FX	DIST	LD
MAX.	0.19	1.53	401	22.89	4.60	407			
	0.00	0.00	401	0.00	0.00	401	5.82 C	4.60	406
MIN.	-5.09	4.60	407	-0.71	4.60	401			
	0.00	4.60	408	0.00	4.60	408	1.90 C	0.00	401

2	0.00	MAX	-0.14	401	0.00	408	0.00	408	0.00	408
		MIN	-5.01	407	0.00	408	0.00	408	0.00	408
	0.38	MAX	-0.12	401	1.92	407	0.00	408	0.00	408
		MIN	-5.00	407	0.05	401	0.00	408	0.00	408

0.77	MAX	-0.11	401	3.84	407	0.00	408	0.00	408
	MIN	-4.99	407	0.10	401	0.00	408	0.00	408
1.15	MAX	-0.11	401	5.75	407	0.00	408	0.00	408
	MIN	-4.99	407	0.14	401	0.00	408	0.00	408
1.53	MAX	-0.11	401	7.67	407	0.00	408	0.00	408
	MIN	-4.99	407	0.18	401	0.00	408	0.00	408
1.92	MAX	-0.11	401	9.58	407	0.00	408	0.00	408
	MIN	-4.99	407	0.22	401	0.00	408	0.00	408
2.30	MAX	-0.12	401	11.50	407	0.00	408	0.00	408
	MIN	-5.00	407	0.27	401	0.00	408	0.00	408
2.69	MAX	-0.14	401	13.42	407	0.00	408	0.00	408
	MIN	-5.01	407	0.32	401	0.00	408	0.00	408
3.07	MAX	-0.15	401	15.35	407	0.00	408	0.00	408
	MIN	-5.03	407	0.37	401	0.00	408	0.00	408
3.45	MAX	-0.18	401	17.28	407	0.00	408	0.00	408
	MIN	-5.05	407	0.44	401	0.00	408	0.00	408
3.84	MAX	-0.20	401	19.22	407	0.00	408	0.00	408
	MIN	-5.08	407	0.51	401	0.00	408	0.00	408
4.22	MAX	-0.23	401	21.18	407	0.00	408	0.00	408
	MIN	-5.11	407	0.59	401	0.00	408	0.00	408
4.60	MAX	-0.27	401	23.15	407	0.00	408	0.00	408
	MIN	-5.15	407	0.69	401	0.00	408	0.00	408

MAX/MIN FORCE VALUES FOR MEMB 2, AMONGST ALL SECT LOCATIONS

	FY/ FZ	DIST DIST	LD LD	MZ/ MY	DIST DIST	LD LD	FX	DIST	LD
MAX.	-0.11	1.53	401	23.15	4.60	407			
	0.00	0.00	401	0.00	0.00	401	5.61 C	4.60	408
MIN.	-5.15	4.60	407	0.00	0.00	408			
	0.00	4.60	408	0.00	4.60	408	0.07 C	0.00	401

3	0.00	MAX	4.37	406	21.41	407	0.00	408	0.00	408
		MIN	1.38	405	-1.21	401	0.00	408	0.00	408
	0.75	MAX	3.32	407	18.91	407	0.00	408	0.00	408
		MIN	-0.08	401	-1.15	401	0.00	408	0.00	408
	1.50	MAX	3.32	407	16.42	407	0.00	408	0.00	408
		MIN	-0.08	401	-1.12	402	0.00	408	0.00	408
	2.26	MAX	3.32	407	14.42	408	0.00	408	0.00	408
		MIN	-0.08	401	-3.04	402	0.00	408	0.00	408
	3.01	MAX	3.32	407	13.37	405	0.00	408	0.00	408
		MIN	-0.08	401	-4.01	402	0.00	408	0.00	408
	3.76	MAX	3.32	407	12.34	405	0.00	408	0.00	408
		MIN	-0.08	401	-4.97	402	0.00	408	0.00	408
	4.51	MAX	3.32	407	11.30	405	0.00	408	0.00	408
		MIN	-0.08	401	-5.94	402	0.00	408	0.00	408
	5.27	MAX	3.32	407	10.27	405	0.00	408	0.00	408
		MIN	-0.08	401	-6.90	402	0.00	408	0.00	408
	6.02	MAX	2.55	403	9.23	405	0.00	408	0.00	408
		MIN	-0.65	402	-7.83	402	0.00	408	0.00	408
	6.77	MAX	2.55	403	8.20	405	0.00	408	0.00	408
		MIN	-0.65	402	-7.34	402	0.00	408	0.00	408

	7.52	MAX	2.55	403	7.16	405	0.00	408	0.00	408
		MIN	-0.65	402	-8.35	403	0.00	408	0.00	408
	8.28	MAX	2.32	408	6.13	405	0.00	408	0.00	408
		MIN	-0.65	402	-9.73	403	0.00	408	0.00	408
	9.03	MAX	2.32	408	5.09	405	0.00	408	0.00	408
		MIN	-0.65	402	-10.19	403	0.00	408	0.00	408

MAX/MIN FORCE VALUES FOR MEMB 3, AMONGST ALL SECT LOCATIONS

	FY/ FZ	DIST DIST	LD LD	MZ/ MY	DIST DIST	LD LD	FX	DIST	LD
MAX.	4.37	0.00	406	21.41	0.00	407			
	0.00	0.00	401	0.00	0.00	401	6.29 C	0.00	407
MIN.	-0.65	9.03	402	-10.19	9.03	403			
	0.00	9.03	408	0.00	9.03	408	0.27 C	9.03	401

4	0.00	MAX	3.05	408	5.09	405	0.00	408	0.00	408
		MIN	-0.44	402	-10.19	403	0.00	408	0.00	408
	1.00	MAX	3.05	408	3.87	406	0.00	408	0.00	408
		MIN	-0.44	402	-11.21	403	0.00	408	0.00	408
	2.00	MAX	3.05	408	2.73	406	0.00	408	0.00	408
		MIN	-0.44	402	-12.23	403	0.00	408	0.00	408
	3.00	MAX	2.48	404	1.58	406	0.00	408	0.00	408
		MIN	-0.93	403	-11.38	403	0.00	408	0.00	408
	4.00	MAX	2.48	404	0.43	406	0.00	408	0.00	408
		MIN	-0.93	403	-12.06	404	0.00	408	0.00	408
	5.00	MAX	1.95	405	-0.28	401	0.00	408	0.00	408
		MIN	-0.93	403	-12.66	404	0.00	408	0.00	408
	6.00	MAX	1.95	405	-0.23	401	0.00	408	0.00	408
		MIN	-0.93	403	-13.19	404	0.00	408	0.00	408
	7.00	MAX	1.95	405	-0.19	401	0.00	408	0.00	408
		MIN	-0.93	403	-13.72	404	0.00	408	0.00	408
	8.00	MAX	1.95	405	-0.14	401	0.00	408	0.00	408
		MIN	-0.93	403	-14.25	404	0.00	408	0.00	408
	9.00	MAX	1.95	405	-0.10	401	0.00	408	0.00	408
		MIN	-1.42	404	-12.91	404	0.00	408	0.00	408
	10.00	MAX	1.95	405	-0.05	401	0.00	408	0.00	408
		MIN	-1.42	404	-14.37	405	0.00	408	0.00	408
	11.00	MAX	1.15	406	-0.01	401	0.00	408	0.00	408
		MIN	-1.42	404	-14.44	405	0.00	408	0.00	408
	12.00	MAX	1.15	406	0.04	401	0.00	408	0.00	408
		MIN	-1.42	404	-14.44	405	0.00	408	0.00	408

MAX/MIN FORCE VALUES FOR MEMB 4, AMONGST ALL SECT LOCATIONS

	FY/ FZ	DIST DIST	LD LD	MZ/ MY	DIST DIST	LD LD	FX	DIST	LD

MAX.	3.05	0.00	408	5.09	0.00	405				
	0.00	0.00	401	0.00	0.00	401	5.83 C	0.00	407	
MIN.	-1.42	12.00	404	-14.44	11.00	405				
	0.00	12.00	408	0.00	12.00	408	0.28 C	12.00	401	

5	0.00	MAX	2.75	406	8.40	404	0.00	408	0.00	408
		MIN	0.04	401	-3.00	407	0.00	408	0.00	408
	1.00	MAX	2.75	406	7.21	403	0.00	408	0.00	408
		MIN	0.04	401	-4.78	407	0.00	408	0.00	408
	2.00	MAX	2.75	406	6.28	403	0.00	408	0.00	408
		MIN	-0.17	407	-6.48	407	0.00	408	0.00	408
	3.00	MAX	2.75	406	5.35	403	0.00	408	0.00	408
		MIN	-0.17	407	-7.55	406	0.00	408	0.00	408
	4.00	MAX	1.95	405	4.42	403	0.00	408	0.00	408
		MIN	-0.17	407	-10.23	406	0.00	408	0.00	408
	5.00	MAX	1.95	405	3.49	403	0.00	408	0.00	408
		MIN	-0.17	407	-11.03	406	0.00	408	0.00	408
	6.00	MAX	1.95	405	2.57	403	0.00	408	0.00	408
		MIN	-0.17	407	-11.83	406	0.00	408	0.00	408
	7.00	MAX	1.95	405	1.64	402	0.00	408	0.00	408
		MIN	-0.17	407	-12.63	406	0.00	408	0.00	408
	8.00	MAX	1.95	405	1.20	402	0.00	408	0.00	408
		MIN	-1.15	406	-13.36	406	0.00	408	0.00	408
	9.00	MAX	1.95	405	0.75	402	0.00	408	0.00	408
		MIN	-1.15	406	-12.56	405	0.00	408	0.00	408
	10.00	MAX	1.42	404	0.31	402	0.00	408	0.00	408
		MIN	-1.15	406	-14.43	405	0.00	408	0.00	408
	11.00	MAX	1.42	404	0.08	401	0.00	408	0.00	408
		MIN	-1.15	406	-14.44	405	0.00	408	0.00	408
	12.00	MAX	1.42	404	0.04	401	0.00	408	0.00	408
		MIN	-1.15	406	-14.44	405	0.00	408	0.00	408

MAX/MIN FORCE VALUES FOR MEMB 5, AMONGST ALL SECT LOCATIONS

	FY/ FZ	DIST DIST	LD LD	MZ/ MY	DIST DIST	LD LD	FX	DIST	LD
MAX.	2.75	0.00	406	8.40	0.00	404			
	0.00	0.00	401	0.00	0.00	401	5.83 C	0.00	407
MIN.	-1.15	12.00	406	-14.44	12.00	405			
	0.00	12.00	408	0.00	12.00	408	0.28 C	12.00	401

6	0.00	MAX	4.02	408	21.75	407	0.00	408	0.00	408
		MIN	0.01	401	0.65	401	0.00	408	0.00	408
	0.75	MAX	4.02	408	19.51	407	0.00	408	0.00	408
		MIN	0.01	401	0.65	401	0.00	408	0.00	408
	1.50	MAX	4.02	408	17.27	407	0.00	408	0.00	408
		MIN	0.01	401	0.64	401	0.00	408	0.00	408
	2.26	MAX	2.98	407	15.02	407	0.00	408	0.00	408
		MIN	0.01	401	0.63	401	0.00	408	0.00	408
	3.01	MAX	2.98	407	13.80	404	0.00	408	0.00	408

	MIN	0.01	401	0.63	401	0.00	408	0.00	408
3.76	MAX	2.98	407	13.12	404	0.00	408	0.00	408
	MIN	0.01	401	0.62	401	0.00	408	0.00	408
4.51	MAX	2.98	407	12.45	404	0.00	408	0.00	408
	MIN	0.01	401	0.61	401	0.00	408	0.00	408
5.27	MAX	2.98	407	11.77	404	0.00	408	0.00	408
	MIN	0.01	401	0.60	401	0.00	408	0.00	408
6.02	MAX	2.98	407	11.10	404	0.00	408	0.00	408
	MIN	0.01	401	0.60	401	0.00	408	0.00	408
6.77	MAX	2.98	407	10.43	404	0.00	408	0.00	408
	MIN	0.01	401	0.59	401	0.00	408	0.00	408
7.52	MAX	2.98	407	9.75	404	0.00	408	0.00	408
	MIN	0.01	401	-0.66	407	0.00	408	0.00	408
8.28	MAX	2.09	406	9.08	404	0.00	408	0.00	408
	MIN	0.01	401	-2.21	407	0.00	408	0.00	408
9.03	MAX	2.09	406	8.40	404	0.00	408	0.00	408
	MIN	0.01	401	-3.00	407	0.00	408	0.00	408

MAX/MIN FORCE VALUES FOR MEMB 6, AMONGST ALL SECT LOCATIONS

	FY/ FZ	DIST DIST	LD LD	MZ/ MY	DIST DIST	LD LD	FX	DIST	LD
MAX.	4.02	0.00	408	21.75	0.00	407			
	0.00	0.00	401	0.00	0.00	401	6.25 C	0.00	407
MIN.	0.01	9.03	401	-3.00	9.03	407			
	0.00	9.03	408	0.00	9.03	408	0.28 C	9.03	401

********** END OF FORCE ENVELOPE FROM INTERNAL STORAGE **********

271. LOAD LIST 501 TO 508
272. PRINT FORCE ENVELOPE NSECTION 4 LIST 1 TO 6

MEMBER FORCE ENVELOPE

ALL UNITS ARE KIP FEET

MEMB	DISTANCE		FY	LD	MZ	LD	FZ	LD	MY	LD
1	0.00	MAX	0.20	501	0.00	508	0.00	508	0.00	508
		MIN	-7.24	505	0.00	508	0.00	508	0.00	508
	0.38	MAX	0.21	501	2.78	505	0.00	508	0.00	508
		MIN	-7.23	505	-0.08	501	0.00	508	0.00	508
	0.77	MAX	0.22	501	5.55	505	0.00	508	0.00	508
		MIN	-7.22	505	-0.16	501	0.00	508	0.00	508
	1.15	MAX	0.23	501	8.32	505	0.00	508	0.00	508
		MIN	-7.22	505	-0.25	501	0.00	508	0.00	508
	1.53	MAX	0.23	501	11.09	505	0.00	508	0.00	508
		MIN	-7.22	505	-0.34	501	0.00	508	0.00	508
	1.92	MAX	0.22	501	13.86	505	0.00	508	0.00	508
		MIN	-7.22	505	-0.42	501	0.00	508	0.00	508
	2.30	MAX	0.21	501	16.63	505	0.00	508	0.00	508
		MIN	-7.23	505	-0.51	501	0.00	508	0.00	508
	2.69	MAX	0.20	501	19.41	505	0.00	508	0.00	508
		MIN	-7.24	505	-0.59	501	0.00	508	0.00	508
	3.07	MAX	0.18	501	22.19	505	0.00	508	0.00	508
		MIN	-7.26	505	-0.66	501	0.00	508	0.00	508
	3.45	MAX	0.16	501	24.98	505	0.00	508	0.00	508
		MIN	-7.28	505	-0.73	501	0.00	508	0.00	508
	3.84	MAX	0.13	501	27.78	505	0.00	508	0.00	508
		MIN	-7.31	505	-0.78	501	0.00	508	0.00	508
	4.22	MAX	0.10	501	30.59	505	0.00	508	0.00	508
		MIN	-7.34	505	-0.83	501	0.00	508	0.00	508
	4.60	MAX	0.07	501	33.41	505	0.00	508	0.00	508
		MIN	-7.38	505	-0.86	501	0.00	508	0.00	508

MAX/MIN FORCE VALUES FOR MEMB 1, AMONGST ALL SECT LOCATIONS

	FY/ FZ	DIST DIST	LD LD	MZ/ MY	DIST DIST	LD LD	FX	DIST	LD
MAX.	0.23	1.53	501	33.41	4.60	505			
	0.00	0.00	501	0.00	0.00	501	6.62 C	4.60	503
MIN.	-7.38	4.60	505	-0.86	4.60	501			
	0.00	4.60	508	0.00	4.60	508	2.38 C	0.00	501

2	0.00	MAX	-0.18	501	0.00	508	0.00	508	0.00	508
		MIN	-7.35	505	0.00	508	0.00	508	0.00	508
	0.38	MAX	-0.17	501	2.82	505	0.00	508	0.00	508
		MIN	-7.34	505	0.07	501	0.00	508	0.00	508

	0.77	MAX	-0.16	501	5.63	505	0.00	508	0.00	508
		MIN	-7.33	505	0.13	501	0.00	508	0.00	508
	1.15	MAX	-0.15	501	8.44	505	0.00	508	0.00	508
		MIN	-7.32	505	0.19	501	0.00	508	0.00	508
	1.53	MAX	-0.15	501	11.25	505	0.00	508	0.00	508
		MIN	-7.32	505	0.24	501	0.00	508	0.00	508
	1.92	MAX	-0.16	501	14.06	505	0.00	508	0.00	508
		MIN	-7.33	505	0.30	501	0.00	508	0.00	508
	2.30	MAX	-0.17	501	16.88	505	0.00	508	0.00	508
		MIN	-7.34	505	0.37	501	0.00	508	0.00	508
	2.69	MAX	-0.18	501	19.69	505	0.00	508	0.00	508
		MIN	-7.35	505	0.43	501	0.00	508	0.00	508
	3.07	MAX	-0.20	501	22.52	505	0.00	508	0.00	508
		MIN	-7.37	505	0.50	501	0.00	508	0.00	508
	3.45	MAX	-0.22	501	25.35	505	0.00	508	0.00	508
		MIN	-7.39	505	0.58	501	0.00	508	0.00	508
	3.84	MAX	-0.24	501	28.19	505	0.00	508	0.00	508
		MIN	-7.42	505	0.67	501	0.00	508	0.00	508
	4.22	MAX	-0.28	501	31.04	505	0.00	508	0.00	508
		MIN	-7.45	505	0.77	501	0.00	508	0.00	508
	4.60	MAX	-0.31	501	33.90	505	0.00	508	0.00	508
		MIN	-7.48	505	0.88	501	0.00	508	0.00	508

MAX/MIN FORCE VALUES FOR MEMB 2, AMONGST ALL SECT LOCATIONS

	FY/ FZ	DIST DIST	LD LD	MZ/ MY	DIST DIST	LD LD	FX	DIST	LD
MAX.	-0.15	1.53	501	33.90	4.60	505			
	0.00	0.00	501	0.00	0.00	501	7.02 C	4.60	508
MIN.	-7.48	4.60	505	0.00	0.00	508			
	0.00	4.60	508	0.00	4.60	508	0.09 C	0.00	501

3	0.00	MAX	5.21	503	31.77	505	0.00	508	0.00	508
		MIN	1.21	507	-1.49	501	0.00	508	0.00	508
	0.75	MAX	5.21	503	30.26	506	0.00	508	0.00	508
		MIN	-0.10	501	-1.42	501	0.00	508	0.00	508
	1.50	MAX	5.21	503	28.76	506	0.00	508	0.00	508
		MIN	-0.10	501	-1.38	502	0.00	508	0.00	508
	2.26	MAX	5.21	503	27.27	506	0.00	508	0.00	508
		MIN	-0.10	501	-3.79	502	0.00	508	0.00	508
	3.01	MAX	5.21	503	25.78	506	0.00	508	0.00	508
		MIN	-0.10	501	-5.00	502	0.00	508	0.00	508
	3.76	MAX	5.21	503	24.29	506	0.00	508	0.00	508
		MIN	-0.10	501	-6.21	502	0.00	508	0.00	508
	4.51	MAX	4.07	504	22.80	506	0.00	508	0.00	508
		MIN	-0.10	501	-7.42	502	0.00	508	0.00	508
	5.27	MAX	4.07	504	21.30	506	0.00	508	0.00	508
		MIN	-0.10	501	-8.63	502	0.00	508	0.00	508
	6.02	MAX	4.07	504	19.81	506	0.00	508	0.00	508
		MIN	-0.81	502	-10.46	503	0.00	508	0.00	508
	6.77	MAX	4.07	504	18.32	506	0.00	508	0.00	508
		MIN	-0.81	502	-12.55	503	0.00	508	0.00	508

7.52	MAX	4.07	504	17.37	507	0.00	508	0.00	508
	MIN	-0.81	502	-14.65	503	0.00	508	0.00	508
8.28	MAX	4.07	504	16.45	507	0.00	508	0.00	508
	MIN	-0.81	502	-16.08	503	0.00	508	0.00	508
9.03	MAX	4.07	504	15.54	507	0.00	508	0.00	508
	MIN	-0.81	502	-16.36	503	0.00	508	0.00	508

MAX/MIN FORCE VALUES FOR MEMB 3, AMONGST ALL SECT LOCATIONS

	FY/ FZ	DIST DIST	LD LD	MZ/ MY	DIST DIST	LD LD	FX	DIST	LD
MAX.	5.21	0.00	503	31.77	0.00	505			
	0.00	0.00	501	0.00	0.00	501	8.57 C	0.00	505
MIN.	-0.81	8.28	502	-16.36	9.03	503			
	0.00	9.03	508	0.00	9.03	508	0.31 C	9.03	501

4	0.00	MAX	4.99	504	15.54	507	0.00	508	0.00	508
		MIN	-0.55	502	-16.36	503	0.00	508	0.00	508
	1.00	MAX	3.99	505	13.50	507	0.00	508	0.00	508
		MIN	-0.55	502	-17.36	503	0.00	508	0.00	508
	2.00	MAX	3.99	505	11.46	507	0.00	508	0.00	508
		MIN	-0.55	502	-18.36	503	0.00	508	0.00	508
	3.00	MAX	3.99	505	9.42	507	0.00	508	0.00	508
		MIN	-1.44	503	-18.61	504	0.00	508	0.00	508
	4.00	MAX	3.99	505	7.38	507	0.00	508	0.00	508
		MIN	-1.44	503	-21.16	504	0.00	508	0.00	508
	5.00	MAX	3.99	505	5.35	507	0.00	508	0.00	508
		MIN	-1.44	503	-21.36	504	0.00	508	0.00	508
	6.00	MAX	3.99	505	3.31	507	0.00	508	0.00	508
		MIN	-1.44	503	-21.47	504	0.00	508	0.00	508
	7.00	MAX	2.99	506	1.97	508	0.00	508	0.00	508
		MIN	-1.44	503	-21.57	504	0.00	508	0.00	508
	8.00	MAX	2.99	506	1.02	508	0.00	508	0.00	508
		MIN	-1.44	503	-21.96	505	0.00	508	0.00	508
	9.00	MAX	2.99	506	0.07	508	0.00	508	0.00	508
		MIN	-2.33	504	-23.50	505	0.00	508	0.00	508
	10.00	MAX	2.99	506	-0.07	501	0.00	508	0.00	508
		MIN	-2.33	504	-25.05	505	0.00	508	0.00	508
	11.00	MAX	2.99	506	-0.02	501	0.00	508	0.00	508
		MIN	-2.33	504	-24.25	505	0.00	508	0.00	508
	12.00	MAX	2.99	506	0.04	501	0.00	508	0.00	508
		MIN	-2.33	504	-23.36	505	0.00	508	0.00	508

MAX/MIN FORCE VALUES FOR MEMB 4, AMONGST ALL SECT LOCATIONS

FY/ FZ	DIST DIST	LD LD	MZ/ MY	DIST DIST	LD LD	FX	DIST	LD

MAX.	4.99	0.00	504	15.54	0.00	507			
	0.00	0.00	501	0.00	0.00	501	8.13 C	0.00	505
MIN.	-2.33	12.00	504	-25.05	10.00	505			
	0.00	12.00	508	0.00	12.00	508	0.32 C	12.00	501

5	0.00	MAX	4.33	506	15.56	504	0.00	508	0.00	508
		MIN	-0.95	508	-14.25	508	0.00	508	0.00	508
	1.00	MAX	4.33	506	13.22	504	0.00	508	0.00	508
		MIN	-0.95	508	-16.91	507	0.00	508	0.00	508
	2.00	MAX	4.33	506	10.89	504	0.00	508	0.00	508
		MIN	-0.95	508	-19.65	507	0.00	508	0.00	508
	3.00	MAX	4.33	506	8.89	503	0.00	508	0.00	508
		MIN	-0.95	508	-20.05	507	0.00	508	0.00	508
	4.00	MAX	3.33	505	7.45	503	0.00	508	0.00	508
		MIN	-0.95	508	-20.45	507	0.00	508	0.00	508
	5.00	MAX	3.33	505	6.01	503	0.00	508	0.00	508
		MIN	-0.95	508	-20.86	507	0.00	508	0.00	508
	6.00	MAX	3.33	505	4.57	503	0.00	508	0.00	508
		MIN	-2.04	507	-21.16	507	0.00	508	0.00	508
	7.00	MAX	3.33	505	3.13	503	0.00	508	0.00	508
		MIN	-2.04	507	-22.49	506	0.00	508	0.00	508
	8.00	MAX	3.33	505	1.69	503	0.00	508	0.00	508
		MIN	-2.04	507	-24.28	506	0.00	508	0.00	508
	9.00	MAX	3.33	505	0.94	502	0.00	508	0.00	508
		MIN	-2.04	507	-23.74	506	0.00	508	0.00	508
	10.00	MAX	2.33	504	0.39	502	0.00	508	0.00	508
		MIN	-2.04	507	-23.19	506	0.00	508	0.00	508
	11.00	MAX	2.33	504	0.10	501	0.00	508	0.00	508
		MIN	-2.04	507	-22.64	506	0.00	508	0.00	508
	12.00	MAX	2.33	504	0.04	501	0.00	508	0.00	508
		MIN	-2.99	506	-23.36	505	0.00	508	0.00	508

MAX/MIN FORCE VALUES FOR MEMB 5, AMONGST ALL SECT LOCATIONS

	FY/ FZ	DIST DIST	LD LD	MZ/ MY	DIST DIST	LD LD	FX	DIST	LD
MAX.	4.33	0.00	506	15.56	0.00	504			
	0.00	0.00	501	0.00	0.00	501	8.13 C	0.00	505
MIN.	-2.99	12.00	506	-24.28	8.00	506			
	0.00	12.00	508	0.00	12.00	508	0.32 C	12.00	501

6	0.00	MAX	5.69	508	32.42	505	0.00	508	0.00	508
		MIN	0.02	501	0.84	501	0.00	508	0.00	508
	0.75	MAX	5.69	508	30.69	505	0.00	508	0.00	508
		MIN	0.02	501	0.83	501	0.00	508	0.00	508
	1.50	MAX	5.69	508	28.96	505	0.00	508	0.00	508
		MIN	0.02	501	0.82	501	0.00	508	0.00	508
	2.26	MAX	4.43	507	27.23	505	0.00	508	0.00	508
		MIN	0.02	501	0.81	501	0.00	508	0.00	508
	3.01	MAX	4.43	507	25.50	505	0.00	508	0.00	508

	MIN	0.02	501	0.02	508	0.00	508	0.00	508
3.76	MAX	4.43	507	23.77	505	0.00	508	0.00	508
	MIN	0.02	501	-2.43	508	0.00	508	0.00	508
4.51	MAX	4.43	507	22.06	504	0.00	508	0.00	508
	MIN	0.02	501	-4.89	508	0.00	508	0.00	508
5.27	MAX	4.43	507	20.98	504	0.00	508	0.00	508
	MIN	0.02	501	-7.34	508	0.00	508	0.00	508
6.02	MAX	4.43	507	19.89	504	0.00	508	0.00	508
	MIN	0.02	501	-9.56	508	0.00	508	0.00	508
6.77	MAX	4.43	507	18.81	504	0.00	508	0.00	508
	MIN	0.02	501	-10.19	508	0.00	508	0.00	508
7.52	MAX	4.43	507	17.72	504	0.00	508	0.00	508
	MIN	0.02	501	-10.83	508	0.00	508	0.00	508
8.28	MAX	3.32	506	16.64	504	0.00	508	0.00	508
	MIN	0.02	501	-12.55	507	0.00	508	0.00	508
9.03	MAX	3.32	506	15.56	504	0.00	508	0.00	508
	MIN	-1.58	508	-14.25	508	0.00	508	0.00	508

MAX/MIN FORCE VALUES FOR MEMB 6, AMONGST ALL SECT LOCATIONS

	FY/ FZ	DIST DIST	LD LD	MZ/ MY	DIST DIST	LD LD	FX	DIST	LD
MAX.	5.69	0.00	508	32.42	0.00	505			
	0.00	0.00	501	0.00	0.00	501	8.48 C	0.00	505
MIN.	-1.58	9.03	508	-14.25	9.03	508			
	0.00	9.03	508	0.00	9.03	508	0.33 C	9.03	501

********** END OF FORCE ENVELOPE FROM INTERNAL STORAGE **********

273. LOAD LIST 601 TO 609
274. PRINT FORCE ENVELOPE NSECTION 4 LIST 1 TO 6

MEMBER FORCE ENVELOPE

ALL UNITS ARE KIP FEET

MEMB	DISTANCE		FY	LD	MZ	LD	FZ	LD	MY	LD
1	0.00	MAX	0.23	601	0.00	609	0.00	609	0.00	609
		MIN	-6.76	608	0.00	609	0.00	609	0.00	609
	0.38	MAX	0.25	601	2.59	608	0.00	609	0.00	609
		MIN	-6.75	608	-0.09	601	0.00	609	0.00	609
	0.77	MAX	0.26	601	5.18	608	0.00	609	0.00	609
		MIN	-6.74	608	-0.19	601	0.00	609	0.00	609
	1.15	MAX	0.26	601	7.76	608	0.00	609	0.00	609
		MIN	-6.74	608	-0.29	601	0.00	609	0.00	609
	1.53	MAX	0.26	601	10.35	608	0.00	609	0.00	609
		MIN	-6.74	608	-0.39	601	0.00	609	0.00	609
	1.92	MAX	0.26	601	12.93	608	0.00	609	0.00	609
		MIN	-6.74	608	-0.49	601	0.00	609	0.00	609
	2.30	MAX	0.25	601	15.52	608	0.00	609	0.00	609
		MIN	-6.75	608	-0.59	601	0.00	609	0.00	609
	2.69	MAX	0.23	601	18.11	608	0.00	609	0.00	609
		MIN	-6.76	608	-0.68	601	0.00	609	0.00	609
	3.07	MAX	0.22	601	20.71	608	0.00	609	0.00	609
		MIN	-6.78	608	-0.76	601	0.00	609	0.00	609
	3.45	MAX	0.20	601	23.32	608	0.00	609	0.00	609
		MIN	-6.80	608	-0.84	601	0.00	609	0.00	609
	3.84	MAX	0.17	601	25.93	608	0.00	609	0.00	609
		MIN	-6.83	608	-0.91	601	0.00	609	0.00	609
	4.22	MAX	0.14	601	28.56	608	0.00	609	0.00	609
		MIN	-6.86	608	-0.97	601	0.00	609	0.00	609
	4.60	MAX	0.10	601	31.19	608	0.00	609	0.00	609
		MIN	-6.89	608	-1.02	601	0.00	609	0.00	609

MAX/MIN FORCE VALUES FOR MEMB 1, AMONGST ALL SECT LOCATIONS

	FY/ FZ	DIST DIST	LD LD	MZ/ MY	DIST DIST	LD LD	FX	DIST	LD
MAX.	0.26	1.53	601	31.19	4.60	608			
	0.00	0.00	601	0.00	0.00	601	5.88 C	4.60	606
MIN.	-6.89	4.60	608	-1.02	4.60	601			
	0.00	4.60	609	0.00	4.60	609	2.86 C	0.00	601

2	0.00	MAX	-0.22	601	0.00	609	0.00	609	0.00	609
		MIN	-6.72	608	0.00	609	0.00	609	0.00	609
	0.38	MAX	-0.21	601	2.57	608	0.00	609	0.00	609
		MIN	-6.70	608	0.08	601	0.00	609	0.00	609

	0.77	MAX	-0.20	601	5.15	608	0.00	609	0.00	609
		MIN	-6.69	608	0.16	601	0.00	609	0.00	609
	1.15	MAX	-0.19	601	7.71	608	0.00	609	0.00	609
		MIN	-6.69	608	0.23	601	0.00	609	0.00	609
	1.53	MAX	-0.19	601	10.28	608	0.00	609	0.00	609
		MIN	-6.69	608	0.31	601	0.00	609	0.00	609
	1.92	MAX	-0.20	601	12.85	608	0.00	609	0.00	609
		MIN	-6.69	608	0.38	601	0.00	609	0.00	609
	2.30	MAX	-0.21	601	15.42	608	0.00	609	0.00	609
		MIN	-6.70	608	0.46	601	0.00	609	0.00	609
	2.69	MAX	-0.22	601	17.99	608	0.00	609	0.00	609
		MIN	-6.72	608	0.54	601	0.00	609	0.00	609
	3.07	MAX	-0.24	601	20.57	608	0.00	609	0.00	609
		MIN	-6.73	608	0.63	601	0.00	609	0.00	609
	3.45	MAX	-0.26	601	23.16	608	0.00	609	0.00	609
		MIN	-6.76	608	0.73	601	0.00	609	0.00	609
	3.84	MAX	-0.29	601	25.76	608	0.00	609	0.00	609
		MIN	-6.78	608	0.83	601	0.00	609	0.00	609
	4.22	MAX	-0.32	601	28.37	608	0.00	609	0.00	609
		MIN	-6.81	608	0.95	601	0.00	609	0.00	609
	4.60	MAX	-0.35	601	30.99	608	0.00	609	0.00	609
		MIN	-6.85	608	1.08	601	0.00	609	0.00	609

MAX/MIN FORCE VALUES FOR MEMB 2, AMONGST ALL SECT LOCATIONS

	FY/ FZ	DIST DIST	LD LD	MZ/ MY	DIST DIST	LD LD	FX	DIST	LD
MAX.	-0.19	1.53	601	30.99	4.60	608			
	0.00	0.00	601	0.00	0.00	601	5.53 C	4.60	609
MIN.	-6.85	4.60	608	0.00	0.00	609			
	0.00	4.60	609	0.00	4.60	609	0.10 C	0.00	601

3	0.00	MAX	5.21	602	29.71	608	0.00	609	0.00	609
		MIN	1.98	609	-1.76	601	0.00	609	0.00	609
	0.75	MAX	4.46	603	27.79	608	0.00	609	0.00	609
		MIN	-0.11	601	-1.68	601	0.00	609	0.00	609
	1.50	MAX	4.46	603	25.87	608	0.00	609	0.00	609
		MIN	-0.11	601	-2.31	602	0.00	609	0.00	609
	2.26	MAX	4.46	603	23.94	608	0.00	609	0.00	609
		MIN	-0.11	601	-4.04	602	0.00	609	0.00	609
	3.01	MAX	4.46	603	22.28	609	0.00	609	0.00	609
		MIN	-0.11	601	-5.78	602	0.00	609	0.00	609
	3.76	MAX	4.46	603	20.79	609	0.00	609	0.00	609
		MIN	-0.11	601	-7.52	602	0.00	609	0.00	609
	4.51	MAX	3.83	604	19.30	609	0.00	609	0.00	609
		MIN	-0.59	602	-8.86	603	0.00	609	0.00	609
	5.27	MAX	3.83	604	17.81	609	0.00	609	0.00	609
		MIN	-0.59	602	-10.04	603	0.00	609	0.00	609
	6.02	MAX	3.83	604	16.31	609	0.00	609	0.00	609
		MIN	-0.59	602	-11.21	603	0.00	609	0.00	609
	6.77	MAX	3.83	604	14.82	609	0.00	609	0.00	609
		MIN	-0.59	602	-12.38	603	0.00	609	0.00	609

7.52	MAX	3.83	604	13.33	609	0.00	609	0.00	609
	MIN	-0.59	602	-13.56	603	0.00	609	0.00	609
8.28	MAX	3.24	605	11.84	609	0.00	609	0.00	609
	MIN	-1.34	603	-14.60	604	0.00	609	0.00	609
9.03	MAX	3.24	605	10.35	609	0.00	609	0.00	609
	MIN	-1.34	603	-15.30	604	0.00	609	0.00	609

MAX/MIN FORCE VALUES FOR MEMB 3, AMONGST ALL SECT LOCATIONS

	FY/ FZ	DIST DIST	LD LD	MZ/ MY	DIST DIST	LD LD	FX	DIST	LD
MAX.	5.21	0.00	602	29.71	0.00	608			
	0.00	0.00	601	0.00	0.00	601	7.95 C	0.00	608
MIN.	-1.34	8.28	603	-15.30	9.03	604			
	0.00	9.03	609	0.00	9.03	609	0.36 C	9.03	601

4	0.00	MAX	3.99	605	10.35	609	0.00	609	0.00	609
		MIN	-0.93	603	-15.30	604	0.00	609	0.00	609
	1.00	MAX	3.99	605	7.46	609	0.00	609	0.00	609
		MIN	-0.93	603	-16.83	604	0.00	609	0.00	609
	2.00	MAX	3.99	605	4.58	609	0.00	609	0.00	609
		MIN	-0.93	603	-18.36	604	0.00	609	0.00	609
	3.00	MAX	3.39	606	1.69	609	0.00	609	0.00	609
		MIN	-1.39	604	-17.30	605	0.00	609	0.00	609
	4.00	MAX	3.39	606	0.21	609	0.00	609	0.00	609
		MIN	-1.39	604	-18.36	605	0.00	609	0.00	609
	5.00	MAX	3.39	606	-0.42	601	0.00	609	0.00	609
		MIN	-1.39	604	-19.42	605	0.00	609	0.00	609
	6.00	MAX	3.39	606	-0.36	601	0.00	609	0.00	609
		MIN	-1.39	604	-20.48	605	0.00	609	0.00	609
	7.00	MAX	2.72	607	-0.29	601	0.00	609	0.00	609
		MIN	-1.87	605	-20.66	606	0.00	609	0.00	609
	8.00	MAX	2.72	607	-0.22	601	0.00	609	0.00	609
		MIN	-1.87	605	-21.12	606	0.00	609	0.00	609
	9.00	MAX	2.72	607	-0.16	601	0.00	609	0.00	609
		MIN	-1.87	605	-21.58	606	0.00	609	0.00	609
	10.00	MAX	2.72	607	-0.09	601	0.00	609	0.00	609
		MIN	-1.87	605	-22.24	607	0.00	609	0.00	609
	11.00	MAX	2.06	608	-0.02	601	0.00	609	0.00	609
		MIN	-2.46	606	-22.16	607	0.00	609	0.00	609
	12.00	MAX	2.06	608	0.04	601	0.00	609	0.00	609
		MIN	-2.46	606	-21.95	607	0.00	609	0.00	609

MAX/MIN FORCE VALUES FOR MEMB 4, AMONGST ALL SECT LOCATIONS

FY/ FZ	DIST DIST	LD LD	MZ/ MY	DIST DIST	LD LD	FX	DIST	LD

MAX.	3.99	0.00	605	10.35	0.00	609				
	0.00	0.00	601	0.00	0.00	601	7.57 C	0.00	608	
MIN.	-2.46	11.00	606	-22.24	10.00	607				
	0.00	12.00	609	0.00	12.00	609	0.37 C	12.00	601	

5	0.00	MAX	4.43	609	12.98	605	0.00	609	0.00	609
		MIN	0.07	601	-5.05	609	0.00	609	0.00	609
	1.00	MAX	4.43	609	11.12	605	0.00	609	0.00	609
		MIN	0.07	601	-9.48	609	0.00	609	0.00	609
	2.00	MAX	3.80	608	9.42	604	0.00	609	0.00	609
		MIN	0.07	601	-13.79	609	0.00	609	0.00	609
	3.00	MAX	3.80	608	8.02	604	0.00	609	0.00	609
		MIN	0.07	601	-15.29	609	0.00	609	0.00	609
	4.00	MAX	3.80	608	6.63	604	0.00	609	0.00	609
		MIN	0.07	601	-16.80	609	0.00	609	0.00	609
	5.00	MAX	3.80	608	5.23	604	0.00	609	0.00	609
		MIN	0.07	601	-18.30	609	0.00	609	0.00	609
	6.00	MAX	3.13	607	3.84	604	0.00	609	0.00	609
		MIN	-1.42	609	-19.69	609	0.00	609	0.00	609
	7.00	MAX	3.13	607	2.83	603	0.00	609	0.00	609
		MIN	-1.42	609	-19.62	608	0.00	609	0.00	609
	8.00	MAX	3.13	607	1.91	603	0.00	609	0.00	609
		MIN	-1.42	609	-20.49	608	0.00	609	0.00	609
	9.00	MAX	3.13	607	0.98	603	0.00	609	0.00	609
		MIN	-1.42	609	-21.35	608	0.00	609	0.00	609
	10.00	MAX	2.46	606	0.49	602	0.00	609	0.00	609
		MIN	-2.06	608	-22.11	608	0.00	609	0.00	609
	11.00	MAX	2.46	606	0.11	601	0.00	609	0.00	609
		MIN	-2.06	608	-21.75	607	0.00	609	0.00	609
	12.00	MAX	2.46	606	0.04	601	0.00	609	0.00	609
		MIN	-2.06	608	-21.95	607	0.00	609	0.00	609

MAX/MIN FORCE VALUES FOR MEMB 5, AMONGST ALL SECT LOCATIONS

	FY/ FZ	DIST DIST	LD LD	MZ/ MY	DIST DIST	LD LD	FX	DIST	LD
MAX.	4.43	0.00	609	12.98	0.00	605			
	0.00	0.00	601	0.00	0.00	601	7.57 C	0.00	608
MIN.	-2.06	11.00	608	-22.11	10.00	608			
	0.00	12.00	609	0.00	12.00	609	0.37 C	12.00	601

6	0.00	MAX	3.52	609	29.43	608	0.00	609	0.00	609
		MIN	0.02	601	1.03	601	0.00	609	0.00	609
	0.75	MAX	3.52	609	27.74	607	0.00	609	0.00	609
		MIN	0.02	601	1.01	601	0.00	609	0.00	609
	1.50	MAX	3.52	609	26.09	607	0.00	609	0.00	609
		MIN	0.02	601	1.00	601	0.00	609	0.00	609
	2.26	MAX	3.52	609	24.45	607	0.00	609	0.00	609
		MIN	0.02	601	0.98	601	0.00	609	0.00	609
	3.01	MAX	3.52	609	22.80	607	0.00	609	0.00	609

	MIN	0.02	601	0.97	601	0.00	609	0.00	609
3.76	MAX	3.52	609	21.16	607	0.00	609	0.00	609
	MIN	0.02	601	0.95	601	0.00	609	0.00	609
4.51	MAX	3.52	609	19.63	606	0.00	609	0.00	609
	MIN	0.02	601	0.94	601	0.00	609	0.00	609
5.27	MAX	3.52	609	18.42	606	0.00	609	0.00	609
	MIN	0.02	601	0.92	601	0.00	609	0.00	609
6.02	MAX	3.52	609	17.21	606	0.00	609	0.00	609
	MIN	0.02	601	0.91	601	0.00	609	0.00	609
6.77	MAX	3.52	609	15.99	606	0.00	609	0.00	609
	MIN	0.02	601	0.89	601	0.00	609	0.00	609
7.52	MAX	3.52	609	14.78	606	0.00	609	0.00	609
	MIN	0.02	601	0.25	609	0.00	609	0.00	609
8.28	MAX	3.52	609	13.84	605	0.00	609	0.00	609
	MIN	0.02	601	-2.40	609	0.00	609	0.00	609
9.03	MAX	3.52	609	12.98	605	0.00	609	0.00	609
	MIN	0.02	601	-5.05	609	0.00	609	0.00	609

MAX/MIN FORCE VALUES FOR MEMB 6, AMONGST ALL SECT LOCATIONS

	FY/ FZ	DIST DIST	LD LD	MZ/ MY	DIST DIST	LD LD	FX	DIST	LD
MAX.	3.52	0.00	609	29.43	0.00	608			
	0.00	0.00	601	0.00	0.00	601	7.98 C	0.00	608
MIN.	0.02	9.03	601	-5.05	9.03	609			
	0.00	9.03	609	0.00	9.03	609	0.37 C	9.03	601

********** END OF FORCE ENVELOPE FROM INTERNAL STORAGE **********

275. LOAD LIST 701 TO 708
276. PRINT FORCE ENVELOPE NSECTION 4 LIST 1 TO 6

MEMBER FORCE ENVELOPE

ALL UNITS ARE KIP FEET

MEMB	DISTANCE		FY	LD	MZ	LD	FZ	LD	MY	LD
1	0.00	MAX	0.19	701	0.00	708	0.00	708	0.00	708
		MIN	-7.55	707	0.00	708	0.00	708	0.00	708
	0.38	MAX	0.21	701	2.90	707	0.00	708	0.00	708
		MIN	-7.54	707	-0.08	701	0.00	708	0.00	708
	0.77	MAX	0.21	701	5.79	707	0.00	708	0.00	708
		MIN	-7.53	707	-0.16	701	0.00	708	0.00	708
	1.15	MAX	0.22	701	8.68	707	0.00	708	0.00	708
		MIN	-7.53	707	-0.24	701	0.00	708	0.00	708
	1.53	MAX	0.22	701	11.56	707	0.00	708	0.00	708
		MIN	-7.53	707	-0.32	701	0.00	708	0.00	708
	1.92	MAX	0.21	701	14.45	707	0.00	708	0.00	708
		MIN	-7.53	707	-0.41	701	0.00	708	0.00	708
	2.30	MAX	0.21	701	17.34	707	0.00	708	0.00	708
		MIN	-7.54	707	-0.49	701	0.00	708	0.00	708
	2.69	MAX	0.19	701	20.24	707	0.00	708	0.00	708
		MIN	-7.55	707	-0.56	701	0.00	708	0.00	708
	3.07	MAX	0.17	701	23.14	707	0.00	708	0.00	708
		MIN	-7.57	707	-0.64	701	0.00	708	0.00	708
	3.45	MAX	0.15	701	26.05	707	0.00	708	0.00	708
		MIN	-7.59	707	-0.70	701	0.00	708	0.00	708
	3.84	MAX	0.13	701	28.97	707	0.00	708	0.00	708
		MIN	-7.62	707	-0.75	701	0.00	708	0.00	708
	4.22	MAX	0.10	701	31.90	707	0.00	708	0.00	708
		MIN	-7.65	707	-0.79	701	0.00	708	0.00	708
	4.60	MAX	0.06	701	34.84	707	0.00	708	0.00	708
		MIN	-7.68	707	-0.83	701	0.00	708	0.00	708

MAX/MIN FORCE VALUES FOR MEMB 1, AMONGST ALL SECT LOCATIONS

	FY/ FZ	DIST DIST	LD LD	MZ/ MY	DIST DIST	LD LD	FX	DIST	LD
MAX.	0.22	1.53	701	34.84	4.60	707			
	0.00	0.00	701	0.00	0.00	701	6.45 C	4.60	703
MIN.	-7.68	4.60	707	-0.83	4.60	701			
	0.00	4.60	708	0.00	4.60	708	2.26 C	0.00	701

2	0.00	MAX	-0.17	701	0.00	708	0.00	708	0.00	708
		MIN	-7.50	707	0.00	708	0.00	708	0.00	708
	0.38	MAX	-0.15	701	2.87	707	0.00	708	0.00	708
		MIN	-7.48	707	0.06	701	0.00	708	0.00	708

0.77	MAX	-0.15	701	5.74	707	0.00	708	0.00	708
	MIN	-7.47	707	0.12	701	0.00	708	0.00	708
1.15	MAX	-0.14	701	8.61	707	0.00	708	0.00	708
	MIN	-7.47	707	0.17	701	0.00	708	0.00	708
1.53	MAX	-0.14	701	11.48	707	0.00	708	0.00	708
	MIN	-7.47	707	0.23	701	0.00	708	0.00	708
1.92	MAX	-0.15	701	14.34	707	0.00	708	0.00	708
	MIN	-7.47	707	0.28	701	0.00	708	0.00	708
2.30	MAX	-0.15	701	17.21	707	0.00	708	0.00	708
	MIN	-7.48	707	0.34	701	0.00	708	0.00	708
2.69	MAX	-0.17	701	20.09	707	0.00	708	0.00	708
	MIN	-7.50	707	0.40	701	0.00	708	0.00	708
3.07	MAX	-0.19	701	22.97	707	0.00	708	0.00	708
	MIN	-7.51	707	0.47	701	0.00	708	0.00	708
3.45	MAX	-0.21	701	25.85	707	0.00	708	0.00	708
	MIN	-7.54	707	0.55	701	0.00	708	0.00	708
3.84	MAX	-0.23	701	28.75	707	0.00	708	0.00	708
	MIN	-7.56	707	0.63	701	0.00	708	0.00	708
4.22	MAX	-0.26	701	31.66	707	0.00	708	0.00	708
	MIN	-7.59	707	0.73	701	0.00	708	0.00	708
4.60	MAX	-0.30	701	34.58	707	0.00	708	0.00	708
	MIN	-7.63	707	0.83	701	0.00	708	0.00	708

MAX/MIN FORCE VALUES FOR MEMB 2, AMONGST ALL SECT LOCATIONS

	FY/ FZ	DIST DIST	LD LD	MZ/ MY	DIST DIST	LD LD	FX	DIST	LD
MAX.	-0.14	1.53	701	34.58	4.60	707			
	0.00	0.00	701	0.00	0.00	701	6.46 C	4.60	708
MIN.	-7.63	4.60	707	0.00	0.00	708			
	0.00	4.60	708	0.00	4.60	708	0.08 C	0.00	701

3	0.00	MAX	5.38	703	33.15	707	0.00	708	0.00	708
		MIN	2.16	708	-1.42	701	0.00	708	0.00	708
	0.75	MAX	5.38	703	30.93	707	0.00	708	0.00	708
		MIN	-0.09	701	-1.35	701	0.00	708	0.00	708
	1.50	MAX	5.38	703	28.71	707	0.00	708	0.00	708
		MIN	-0.09	701	-2.12	702	0.00	708	0.00	708
	2.26	MAX	4.39	704	26.48	707	0.00	708	0.00	708
		MIN	-0.09	701	-3.38	702	0.00	708	0.00	708
	3.01	MAX	4.39	704	24.64	708	0.00	708	0.00	708
		MIN	-0.09	701	-4.64	702	0.00	708	0.00	708
	3.76	MAX	4.39	704	23.01	708	0.00	708	0.00	708
		MIN	-0.09	701	-5.90	702	0.00	708	0.00	708
	4.51	MAX	4.39	704	21.38	708	0.00	708	0.00	708
		MIN	-0.09	701	-7.81	703	0.00	708	0.00	708
	5.27	MAX	4.39	704	19.75	708	0.00	708	0.00	708
		MIN	-0.62	702	-10.13	703	0.00	708	0.00	708
	6.02	MAX	4.39	704	18.12	708	0.00	708	0.00	708
		MIN	-0.62	702	-12.40	703	0.00	708	0.00	708
	6.77	MAX	4.39	704	16.50	708	0.00	708	0.00	708
		MIN	-0.62	702	-12.99	703	0.00	708	0.00	708

7.52	MAX	3.49	705	14.87	708	0.00	708	0.00	708
	MIN	-0.62	702	-13.57	703	0.00	708	0.00	708
8.28	MAX	3.49	705	13.24	708	0.00	708	0.00	708
	MIN	-0.62	702	-14.16	703	0.00	708	0.00	708
9.03	MAX	3.49	705	11.61	708	0.00	708	0.00	708
	MIN	-0.62	702	-14.75	703	0.00	708	0.00	708

MAX/MIN FORCE VALUES FOR MEMB 3, AMONGST ALL SECT LOCATIONS

	FY/ FZ	DIST DIST	LD LD	MZ/ MY	DIST DIST	LD LD	FX	DIST	LD
MAX.	5.38	0.00	703	33.15	0.00	707			
	0.00	0.00	701	0.00	0.00	701	8.89 C	0.00	707
MIN.	-0.62	8.28	702	-14.75	9.03	703			
	0.00	9.03	708	0.00	9.03	708	0.30 C	9.03	701

4	0.00	MAX	4.42	705	11.61	708	0.00	708	0.00	708
		MIN	-0.42	702	-14.75	703	0.00	708	0.00	708
	1.00	MAX	4.42	705	8.45	708	0.00	708	0.00	708
		MIN	-1.05	703	-17.33	704	0.00	708	0.00	708
	2.00	MAX	4.42	705	5.30	708	0.00	708	0.00	708
		MIN	-1.05	703	-17.95	704	0.00	708	0.00	708
	3.00	MAX	3.53	706	3.54	708	0.00	708	0.00	708
		MIN	-1.05	703	-18.48	704	0.00	708	0.00	708
	4.00	MAX	3.53	706	1.85	708	0.00	708	0.00	708
		MIN	-1.05	703	-19.00	704	0.00	708	0.00	708
	5.00	MAX	3.53	706	0.16	708	0.00	708	0.00	708
		MIN	-1.05	703	-19.71	705	0.00	708	0.00	708
	6.00	MAX	3.53	706	-0.28	701	0.00	708	0.00	708
		MIN	-1.79	704	-21.81	705	0.00	708	0.00	708
	7.00	MAX	3.53	706	-0.23	701	0.00	708	0.00	708
		MIN	-1.79	704	-21.69	705	0.00	708	0.00	708
	8.00	MAX	2.57	707	-0.17	701	0.00	708	0.00	708
		MIN	-1.79	704	-21.48	705	0.00	708	0.00	708
	9.00	MAX	2.57	707	-0.12	701	0.00	708	0.00	708
		MIN	-1.79	704	-21.69	706	0.00	708	0.00	708
	10.00	MAX	2.57	707	-0.07	701	0.00	708	0.00	708
		MIN	-1.79	704	-22.90	706	0.00	708	0.00	708
	11.00	MAX	2.57	707	-0.01	701	0.00	708	0.00	708
		MIN	-2.53	705	-24.12	706	0.00	708	0.00	708
	12.00	MAX	2.57	707	0.04	701	0.00	708	0.00	708
		MIN	-2.53	705	-23.10	706	0.00	708	0.00	708

MAX/MIN FORCE VALUES FOR MEMB 4, AMONGST ALL SECT LOCATIONS

FY/ FZ	DIST DIST	LD LD	MZ/ MY	DIST DIST	LD LD	FX	DIST	LD

MAX.	4.42	0.00	705	11.61	0.00	708			
	0.00	0.00	701	0.00	0.00	701	8.45 C	0.00	707
MIN.	-2.53	12.00	705	-24.12	11.00	706			
	0.00	12.00	708	0.00	12.00	708	0.31 C	12.00	701

5	0.00	MAX	4.38	707	14.40	704	0.00	708	0.00	708
		MIN	0.05	701	-9.05	708	0.00	708	0.00	708
	1.00	MAX	4.38	707	12.61	704	0.00	708	0.00	708
		MIN	0.05	701	-11.99	708	0.00	708	0.00	708
	2.00	MAX	4.38	707	10.82	704	0.00	708	0.00	708
		MIN	0.05	701	-14.93	708	0.00	708	0.00	708
	3.00	MAX	4.38	707	9.03	704	0.00	708	0.00	708
		MIN	0.05	701	-17.78	708	0.00	708	0.00	708
	4.00	MAX	3.42	706	7.24	704	0.00	708	0.00	708
		MIN	0.05	701	-18.40	708	0.00	708	0.00	708
	5.00	MAX	3.42	706	5.45	704	0.00	708	0.00	708
		MIN	0.05	701	-19.02	708	0.00	708	0.00	708
	6.00	MAX	3.42	706	4.09	703	0.00	708	0.00	708
		MIN	0.05	701	-19.64	708	0.00	708	0.00	708
	7.00	MAX	3.42	706	3.04	703	0.00	708	0.00	708
		MIN	-1.69	708	-20.58	707	0.00	708	0.00	708
	8.00	MAX	3.42	706	1.99	703	0.00	708	0.00	708
		MIN	-1.69	708	-22.55	707	0.00	708	0.00	708
	9.00	MAX	2.53	705	0.94	703	0.00	708	0.00	708
		MIN	-1.69	708	-22.29	707	0.00	708	0.00	708
	10.00	MAX	2.53	705	0.41	702	0.00	708	0.00	708
		MIN	-1.69	708	-22.04	707	0.00	708	0.00	708
	11.00	MAX	2.53	705	0.09	701	0.00	708	0.00	708
		MIN	-1.69	708	-22.00	706	0.00	708	0.00	708
	12.00	MAX	2.53	705	0.04	701	0.00	708	0.00	708
		MIN	-2.57	707	-23.10	706	0.00	708	0.00	708

MAX/MIN FORCE VALUES FOR MEMB 5, AMONGST ALL SECT LOCATIONS

	FY/ FZ	DIST DIST	LD LD	MZ/ MY	DIST DIST	LD LD	FX	DIST	LD
MAX.	4.38	0.00	707	14.40	0.00	704			
	0.00	0.00	701	0.00	0.00	701	8.45 C	0.00	707
MIN.	-2.57	12.00	707	-23.10	12.00	706			
	0.00	12.00	708	0.00	12.00	708	0.31 C	12.00	701

6	0.00	MAX	4.25	708	32.81	707	0.00	708	0.00	708
		MIN	0.01	701	0.80	701	0.00	708	0.00	708
	0.75	MAX	4.25	708	30.66	706	0.00	708	0.00	708
		MIN	0.01	701	0.79	701	0.00	708	0.00	708
	1.50	MAX	4.25	708	28.87	706	0.00	708	0.00	708
		MIN	0.01	701	0.77	701	0.00	708	0.00	708
	2.26	MAX	4.25	708	27.08	706	0.00	708	0.00	708
		MIN	0.01	701	0.76	701	0.00	708	0.00	708
	3.01	MAX	4.25	708	25.28	706	0.00	708	0.00	708

	MIN	0.01	701	0.75	701	0.00	708	0.00	708
3.76	MAX	4.25	708	23.49	706	0.00	708	0.00	708
	MIN	0.01	701	0.74	701	0.00	708	0.00	708
4.51	MAX	4.25	708	21.69	706	0.00	708	0.00	708
	MIN	0.01	701	0.73	701	0.00	708	0.00	708
5.27	MAX	4.25	708	20.42	705	0.00	708	0.00	708
	MIN	0.01	701	0.72	701	0.00	708	0.00	708
6.02	MAX	4.25	708	19.20	705	0.00	708	0.00	708
	MIN	0.01	701	0.71	701	0.00	708	0.00	708
6.77	MAX	4.25	708	17.98	705	0.00	708	0.00	708
	MIN	0.01	701	0.29	708	0.00	708	0.00	708
7.52	MAX	4.25	708	16.76	705	0.00	708	0.00	708
	MIN	0.01	701	-2.91	708	0.00	708	0.00	708
8.28	MAX	4.25	708	15.53	705	0.00	708	0.00	708
	MIN	0.01	701	-6.11	708	0.00	708	0.00	708
9.03	MAX	3.30	707	14.40	704	0.00	708	0.00	708
	MIN	0.01	701	-9.05	708	0.00	708	0.00	708

MAX/MIN FORCE VALUES FOR MEMB 6, AMONGST ALL SECT LOCATIONS

	FY/ FZ	DIST DIST	LD LD	MZ/ MY	DIST DIST	LD LD	FX	DIST	LD
MAX.	4.25	0.00	708	32.81	0.00	707			
	0.00	0.00	701	0.00	0.00	701	8.93 C	0.00	707
MIN.	0.01	9.03	701	-9.05	9.03	708			
	0.00	9.03	708	0.00	9.03	708	0.32 C	9.03	701

********** END OF FORCE ENVELOPE FROM INTERNAL STORAGE **********

277. LOAD LIST 801 TO 808
278. PRINT FORCE ENVELOPE NSECTION 4 LIST 1 TO 6

MEMBER FORCE ENVELOPE

ALL UNITS ARE KIP FEET

MEMB	DISTANCE		FY	LD	MZ	LD	FZ	LD	MY	LD
1	0.00	MAX	0.15	801	0.00	808	0.00	808	0.00	808
		MIN	-5.46	807	0.00	808	0.00	808	0.00	808
	0.38	MAX	0.16	801	2.09	807	0.00	808	0.00	808
		MIN	-5.45	807	-0.06	801	0.00	808	0.00	808
	0.77	MAX	0.17	801	4.18	807	0.00	808	0.00	808
		MIN	-5.44	807	-0.13	801	0.00	808	0.00	808
	1.15	MAX	0.18	801	6.27	807	0.00	808	0.00	808
		MIN	-5.44	807	-0.19	801	0.00	808	0.00	808
	1.53	MAX	0.18	801	8.36	807	0.00	808	0.00	808
		MIN	-5.44	807	-0.26	801	0.00	808	0.00	808
	1.92	MAX	0.17	801	10.44	807	0.00	808	0.00	808
		MIN	-5.44	807	-0.33	801	0.00	808	0.00	808
	2.30	MAX	0.16	801	12.53	807	0.00	808	0.00	808
		MIN	-5.45	807	-0.39	801	0.00	808	0.00	808
	2.69	MAX	0.15	801	14.62	807	0.00	808	0.00	808
		MIN	-5.46	807	-0.46	801	0.00	808	0.00	808
	3.07	MAX	0.13	801	16.72	807	0.00	808	0.00	808
		MIN	-5.48	807	-0.51	801	0.00	808	0.00	808
	3.45	MAX	0.11	801	18.83	807	0.00	808	0.00	808
		MIN	-5.50	807	-0.56	801	0.00	808	0.00	808
	3.84	MAX	0.09	801	20.95	807	0.00	808	0.00	808
		MIN	-5.53	807	-0.60	801	0.00	808	0.00	808
	4.22	MAX	0.05	801	23.07	807	0.00	808	0.00	808
		MIN	-5.56	807	-0.62	801	0.00	808	0.00	808
	4.60	MAX	0.02	801	25.21	807	0.00	808	0.00	808
		MIN	-5.59	807	-0.64	801	0.00	808	0.00	808

MAX/MIN FORCE VALUES FOR MEMB 1, AMONGST ALL SECT LOCATIONS

	FY/ FZ	DIST DIST	LD LD	MZ/ MY	DIST DIST	LD LD	FX	DIST	LD
MAX.	0.18	1.53	801	25.21	4.60	807			
	0.00	0.00	801	0.00	0.00	801	5.67 C	4.60	805
MIN.	-5.59	4.60	807	-0.64	4.60	801			
	0.00	4.60	808	0.00	4.60	808	1.69 C	0.00	801

2	0.00	MAX	-0.12	801	0.00	808	0.00	808	0.00	808
		MIN	-5.49	807	0.00	808	0.00	808	0.00	808
	0.38	MAX	-0.10	801	2.10	807	0.00	808	0.00	808
		MIN	-5.48	807	0.04	801	0.00	808	0.00	808

0.77	MAX	-0.10	801	4.20	807	0.00	808	0.00	808
	MIN	-5.47	807	0.08	801	0.00	808	0.00	808
1.15	MAX	-0.09	801	6.30	807	0.00	808	0.00	808
	MIN	-5.46	807	0.12	801	0.00	808	0.00	808
1.53	MAX	-0.09	801	8.40	807	0.00	808	0.00	808
	MIN	-5.46	807	0.15	801	0.00	808	0.00	808
1.92	MAX	-0.09	801	10.50	807	0.00	808	0.00	808
	MIN	-5.47	807	0.19	801	0.00	808	0.00	808
2.30	MAX	-0.10	801	12.60	807	0.00	808	0.00	808
	MIN	-5.48	807	0.22	801	0.00	808	0.00	808
2.69	MAX	-0.12	801	14.70	807	0.00	808	0.00	808
	MIN	-5.49	807	0.27	801	0.00	808	0.00	808
3.07	MAX	-0.13	801	16.81	807	0.00	808	0.00	808
	MIN	-5.51	807	0.31	801	0.00	808	0.00	808
3.45	MAX	-0.16	801	18.93	807	0.00	808	0.00	808
	MIN	-5.53	807	0.37	801	0.00	808	0.00	808
3.84	MAX	-0.18	801	21.05	807	0.00	808	0.00	808
	MIN	-5.56	807	0.43	801	0.00	808	0.00	808
4.22	MAX	-0.21	801	23.19	807	0.00	808	0.00	808
	MIN	-5.59	807	0.51	801	0.00	808	0.00	808
4.60	MAX	-0.25	801	25.34	807	0.00	808	0.00	808
	MIN	-5.62	807	0.60	801	0.00	808	0.00	808

MAX/MIN FORCE VALUES FOR MEMB 2, AMONGST ALL SECT LOCATIONS

	FY/ FZ	DIST DIST	LD LD	MZ/ MY	DIST DIST	LD LD	FX	DIST	LD
MAX.	-0.09	1.53	801	25.34	4.60	807			
	0.00	0.00	801	0.00	0.00	801	5.69 C	4.60	808
MIN.	-5.62	4.60	807	0.00	0.00	808			
	0.00	4.60	808	0.00	4.60	808	0.06 C	0.00	801

3	0.00	MAX	4.30	805	23.72	807	0.00	808	0.00	808
		MIN	1.64	801	-1.08	801	0.00	808	0.00	808
	0.75	MAX	3.26	806	21.37	807	0.00	808	0.00	808
		MIN	-0.07	801	-1.03	801	0.00	808	0.00	808
	1.50	MAX	3.26	806	19.55	808	0.00	808	0.00	808
		MIN	-0.07	801	-1.00	802	0.00	808	0.00	808
	2.26	MAX	3.26	806	17.91	808	0.00	808	0.00	808
		MIN	-0.07	801	-2.70	802	0.00	808	0.00	808
	3.01	MAX	3.26	806	16.28	808	0.00	808	0.00	808
		MIN	-0.07	801	-3.56	802	0.00	808	0.00	808
	3.76	MAX	3.26	806	14.64	808	0.00	808	0.00	808
		MIN	-0.07	801	-4.41	802	0.00	808	0.00	808
	4.51	MAX	3.26	806	13.00	808	0.00	808	0.00	808
		MIN	-0.07	801	-5.26	802	0.00	808	0.00	808
	5.27	MAX	3.26	806	11.36	808	0.00	808	0.00	808
		MIN	-0.07	801	-6.12	802	0.00	808	0.00	808
	6.02	MAX	2.32	807	9.72	808	0.00	808	0.00	808
		MIN	-0.58	802	-6.94	802	0.00	808	0.00	808
	6.77	MAX	2.32	807	8.08	808	0.00	808	0.00	808
		MIN	-0.58	802	-6.50	802	0.00	808	0.00	808

7.52	MAX	2.32	807	6.87	808	0.00	808	0.00	808
	MIN	-0.58	802	-7.39	803	0.00	808	0.00	808
8.28	MAX	2.32	807	5.84	808	0.00	808	0.00	808
	MIN	-0.58	802	-8.61	803	0.00	808	0.00	808
9.03	MAX	2.32	807	4.81	808	0.00	808	0.00	808
	MIN	-0.58	802	-9.02	803	0.00	808	0.00	808

MAX/MIN FORCE VALUES FOR MEMB 3, AMONGST ALL SECT LOCATIONS

	FY/ FZ	DIST DIST	LD LD	MZ/ MY	DIST DIST	LD LD	FX	DIST	LD
MAX.	4.30	0.00	805	23.72	0.00	807			
	0.00	0.00	801	0.00	0.00	801	6.76 C	0.00	807
MIN.	-0.58	8.28	802	-9.02	9.03	803			
	0.00	9.03	808	0.00	9.03	808	0.25 C	9.03	801

4	0.00	MAX	3.13	807	4.81	808	0.00	808	0.00	808
		MIN	-0.39	802	-9.02	803	0.00	808	0.00	808
	1.00	MAX	3.13	807	2.69	808	0.00	808	0.00	808
		MIN	-0.39	802	-9.93	803	0.00	808	0.00	808
	2.00	MAX	3.13	807	0.57	808	0.00	808	0.00	808
		MIN	-0.39	802	-10.83	803	0.00	808	0.00	808
	3.00	MAX	2.20	804	-0.32	801	0.00	808	0.00	808
		MIN	-0.82	803	-10.08	803	0.00	808	0.00	808
	4.00	MAX	2.20	804	-0.28	801	0.00	808	0.00	808
		MIN	-0.82	803	-10.68	804	0.00	808	0.00	808
	5.00	MAX	2.12	808	-0.24	801	0.00	808	0.00	808
		MIN	-0.82	803	-11.21	804	0.00	808	0.00	808
	6.00	MAX	2.12	808	-0.20	801	0.00	808	0.00	808
		MIN	-0.82	803	-11.68	804	0.00	808	0.00	808
	7.00	MAX	2.12	808	-0.16	801	0.00	808	0.00	808
		MIN	-0.82	803	-12.15	804	0.00	808	0.00	808
	8.00	MAX	2.12	808	-0.12	801	0.00	808	0.00	808
		MIN	-0.82	803	-12.62	804	0.00	808	0.00	808
	9.00	MAX	1.49	805	-0.08	801	0.00	808	0.00	808
		MIN	-1.26	804	-12.61	808	0.00	808	0.00	808
	10.00	MAX	1.49	805	-0.04	801	0.00	808	0.00	808
		MIN	-1.26	804	-13.39	805	0.00	808	0.00	808
	11.00	MAX	0.59	806	-0.01	801	0.00	808	0.00	808
		MIN	-1.26	804	-13.39	808	0.00	808	0.00	808
	12.00	MAX	0.59	806	0.03	801	0.00	808	0.00	808
		MIN	-1.26	804	-13.78	808	0.00	808	0.00	808

MAX/MIN FORCE VALUES FOR MEMB 4, AMONGST ALL SECT LOCATIONS

FY/ FZ	DIST DIST	LD LD	MZ/ MY	DIST DIST	LD LD	FX	DIST	LD

MAX.	3.13	0.00	807	4.81	0.00	808			
	0.00	0.00	801	0.00	0.00	801	6.32 C	0.00	807
MIN.	-1.26	12.00	804	-13.78	12.00	808			
	0.00	12.00	808	0.00	12.00	808	0.26 C	12.00	801

5	0.00	MAX	2.87	806	7.44	804	0.00	808	0.00	808
		MIN	0.04	801	-0.95	807	0.00	808	0.00	808
	1.00	MAX	2.87	806	6.39	803	0.00	808	0.00	808
		MIN	0.04	801	-2.99	807	0.00	808	0.00	808
	2.00	MAX	2.87	806	5.57	803	0.00	808	0.00	808
		MIN	0.04	801	-4.97	807	0.00	808	0.00	808
	3.00	MAX	2.87	806	4.74	803	0.00	808	0.00	808
		MIN	0.04	801	-5.29	807	0.00	808	0.00	808
	4.00	MAX	1.96	805	3.92	803	0.00	808	0.00	808
		MIN	0.04	801	-7.02	806	0.00	808	0.00	808
	5.00	MAX	1.96	805	3.10	803	0.00	808	0.00	808
		MIN	0.04	801	-8.16	806	0.00	808	0.00	808
	6.00	MAX	1.96	805	2.27	803	0.00	808	0.00	808
		MIN	0.04	801	-9.31	806	0.00	808	0.00	808
	7.00	MAX	1.96	805	1.45	802	0.00	808	0.00	808
		MIN	0.04	801	-10.45	806	0.00	808	0.00	808
	8.00	MAX	1.96	805	1.06	802	0.00	808	0.00	808
		MIN	-0.59	806	-11.52	806	0.00	808	0.00	808
	9.00	MAX	1.96	805	0.67	802	0.00	808	0.00	808
		MIN	-0.59	806	-10.94	806	0.00	808	0.00	808
	10.00	MAX	1.34	808	0.28	802	0.00	808	0.00	808
		MIN	-0.59	806	-12.50	805	0.00	808	0.00	808
	11.00	MAX	1.34	808	0.07	801	0.00	808	0.00	808
		MIN	-0.59	806	-12.74	805	0.00	808	0.00	808
	12.00	MAX	1.26	804	0.03	801	0.00	808	0.00	808
		MIN	-0.59	806	-13.78	808	0.00	808	0.00	808

MAX/MIN FORCE VALUES FOR MEMB 5, AMONGST ALL SECT LOCATIONS

	FY/ FZ	DIST DIST	LD LD	MZ/ MY	DIST DIST	LD LD	FX	DIST	LD
MAX.	2.87	0.00	806	7.44	0.00	804			
	0.00	0.00	801	0.00	0.00	801	6.32 C	0.00	807
MIN.	-0.59	12.00	806	-13.78	12.00	808			
	0.00	12.00	808	0.00	12.00	808	0.26 C	12.00	801

6	0.00	MAX	4.02	808	23.89	807	0.00	808	0.00	808
		MIN	0.01	801	0.57	801	0.00	808	0.00	808
	0.75	MAX	4.02	808	21.78	806	0.00	808	0.00	808
		MIN	0.01	801	0.56	801	0.00	808	0.00	808
	1.50	MAX	4.02	808	20.20	806	0.00	808	0.00	808
		MIN	0.01	801	0.56	801	0.00	808	0.00	808
	2.26	MAX	2.96	807	18.62	806	0.00	808	0.00	808
		MIN	0.01	801	0.55	801	0.00	808	0.00	808
	3.01	MAX	2.96	807	17.04	806	0.00	808	0.00	808

	MIN	0.01	801	0.55	801	0.00	808	0.00	808
3.76	MAX	2.96	807	15.46	806	0.00	808	0.00	808
	MIN	0.01	801	0.54	801	0.00	808	0.00	808
4.51	MAX	2.96	807	13.87	806	0.00	808	0.00	808
	MIN	0.01	801	0.54	801	0.00	808	0.00	808
5.27	MAX	2.96	807	12.29	806	0.00	808	0.00	808
	MIN	0.01	801	0.53	801	0.00	808	0.00	808
6.02	MAX	2.96	807	11.13	805	0.00	808	0.00	808
	MIN	0.01	801	0.53	801	0.00	808	0.00	808
6.77	MAX	2.96	807	10.11	805	0.00	808	0.00	808
	MIN	0.01	801	0.52	801	0.00	808	0.00	808
7.52	MAX	2.96	807	9.10	805	0.00	808	0.00	808
	MIN	0.01	801	0.52	801	0.00	808	0.00	808
8.28	MAX	2.10	806	8.09	805	0.00	808	0.00	808
	MIN	0.01	801	-0.01	807	0.00	808	0.00	808
9.03	MAX	2.10	806	7.44	804	0.00	808	0.00	808
	MIN	0.01	801	-0.95	807	0.00	808	0.00	808

MAX/MIN FORCE VALUES FOR MEMB 6, AMONGST ALL SECT LOCATIONS

	FY/ FZ	DIST DIST	LD LD	MZ/ MY	DIST DIST	LD LD	FX	DIST	LD
MAX.	4.02	0.00	808	23.89	0.00	807			
	0.00	0.00	801	0.00	0.00	801	6.74 C	0.00	807
MIN.	0.01	9.03	801	-0.95	9.03	807			
	0.00	9.03	808	0.00	9.03	808	0.26 C	9.03	801

********** END OF FORCE ENVELOPE FROM INTERNAL STORAGE **********

279. FINISH

********** END OF THE STAAD.Pro RUN **********

**** DATE= MAR 1,2016 TIME= 14:35:14 ****

```
*************************************************************
*   For technical assistance on STAAD.Pro, please visit     *
*   http://selectservices.bentley.com/en-US/                *
*                                                           *
*   Details about additional assistance from                *
*   Bentley and Partners can be found at program menu       *
*   Help->Technical Support                                 *
*                                                           *
*      Copyright (c) 1997-2014 Bentley Systems, Inc.
*                http://www.bentley.com                     *
*************************************************************
```

CONSOLIDECK®

PROSOCO
SINCE 1939

Saltguard® WB

deep-penetrating water & salt barrier

DESCRIPTION AND USE

Consolideck® Saltguard® WB is a ready-to-use water-based, VOC compliant silane/siloxane water repellent and "chloride screen" for the protection of concrete and masonry surfaces. Saltguard® WB penetrates more deeply than conventional water- or solvent-based water repellents. Low odor and alkaline stable, Saltguard® WB is ideal for field or in-plant application to concrete and most masonry surfaces. Saltguard® WB protects horizontal and vertical surfaces from moisture intrusion and chemical attack of chloride salts.

Saltguard® WB's Volatile Organic Compound (VOC) content is 194 grams/liter.

In coastal areas, Saltguard® WB protects against salt air by screening chlorides from penetrating through concrete to the reinforcing steel. Saltguard® WB reduces rebar corrosion and surface spalling caused by water-carried salts. Use Saltguard® WB on horizontal surfaces such as driveways, sidewalks, tile or brick pavers. Provides excellent protection for retaining walls, bridge pilings and other vertical areas exposed to deicing salts.

Saltguard® WB is a ready-to-use effective alternative to conventional solvent-based silanes and siloxanes. Saltguard® WB penetrates and chemically bonds deep within the concrete or masonry substrate to provide long-lasting protection against moisture intrusion and water-related staining or deterioration.

Properly applied, Saltguard® WB produces no surface film. Treated surfaces keep their natural breathing characteristics and natural appearance.

Saltguard® WB is recommended for these substrates. Always test. Coverage is in square feet/meters per gallon.

Substrate	Type	Use?	Coverage
Architectural Concrete Block	Burnished	❖	
	Smooth	❖	
	Split-faced	❖	
	Ribbed	❖	
Concrete	Brick	**yes**	150-300 sq. ft. 14-28 sq. m.
	Tile	**yes**	
	Precast Panels	**yes**	
	Pavers	**yes**	
	Cast-in-place	**yes**	
Fired Clay	Brick	**yes**	100-175 sq. ft. 9-16 sq. m.
	Tile	**yes**	
	Terra Cotta	**yes**	
	Pavers	**yes**	
Marble, Travertine, Limestone	Polished	no	NA
	Unpolished	no	NA
Granite	Polished	no	NA
	Unpolished	no	NA
Sandstone	Unpolished	**yes**	100-175 sq. ft. 9-16 sq. m.
Slate	Unpolished	no	NA

❖ Sure Klean® Custom Masonry Sealer or Weather Seal Blok-Guard® & Grafitti Control may be more appropriate. Always test to ensure desired results. Coverage estimates depend on surface texture and porosity.

ADVANTAGES

- **Penetrates to produce long-lasting protection on vertical or horizontal surfaces.**
- **Water-based formula minimizes explosion and fire hazards associated with alcohol- or solvent-based water repellents.**
- **Easy soap-and-water cleanup from window glass, window frames and application equipment.**
- **Low odor reduces risk of application to occupied buildings.**
- **Alkaline stable — suitable for new "green" concrete, 14-28 days old.**
- **Effective protection against deicing salts and salt air.**

Limitations

- Will not prevent water penetration through structural cracks, defects or open joints.
- Water repellency of treated surfaces will increase for up to 14 days after application.

TECHNICAL DATA

ACTIVE SUBSTANCE: Emulsion of silanes and oligomeric alkyl alkoxysiloxanes.
ACTIVE MATERIAL CONTENT: 10%
FORM: White, milky liquid
SPECIFIC GRAVITY: 0.990
FLASH POINT: >200°F (>93°C)
FREEZE POINT: 32°F (0°C)
VOC: 194 grams/liter (ASTM D 3960)
WT./GAL.: 8.24 lbs.

Performance Tests

Laboratory testing has shown this product to be a singularly effective general purpose water repellent/chloride screen.

 ©Copyright PROSOCO, Inc. 2002

NCHRP 244 Series II Reduction of Water absorption (compared to untreated control)	89%
NCHRP 244 Series IV Reduction in total chloride ion concentration (as compared to untreated control specimens)	91%
AASHTO T259/260	
Chloride penetration	2.8
Total chlorides, pcy	2.1
ASTM C 140 Reduction of water absorption (compared to untreated control)	92%
ASTM C 67 Reduction of water absorption (compared to untreated control)	94%
ASTM E 514 Wind-driven rain penetration (percent reduction of control)	89%
Surface deterioration/discoloration:	None
Penetration (depending on substrate)	1-10 mm
Resistance to:	
· Sunlight	Excellent
· Alkalinity	Excellent
Surface Appearance (after application)	No change

Saltguard® WB is not suitable for application to synthetic resin paints, gypsum, or other nonmasonry surfaces. The product may not be suitable for surfaces to receive paints or coatings. Always test for compatibility.

PREPARATION

Protect people, property, vehicles, and (to minimize cleanup) all nonmasonry surfaces that may come into contact with the product, spray, wind drift or fumes. Protect and/or divert pedestrian and auto traffic.

Though Saltguard® WB has very little odor, avoid exposing building occupants to fumes. Maintain adequate ventilation when working on interior surfaces.

Surface Preparation

Thoroughly clean the surface using the appropriate Sure Klean® or Enviro Klean® product. Remove any curing compound or previous sealer. Though Saltguard® WB may be applied to slightly damp surfaces, best performance is achieved on clean, visibly dry and absorbent surfaces. Excessive moisture inhibits penetration and reduces the service life and performance of the treatment.

Clean newly constructed and repointed surfaces before application. Saltguard® WB won't impair adhesion of most sealing and caulking compounds. Always test for compatibility.

Surface and air temperatures must be at least 40°F (4°C) during application and above 40°F (4°C) for 8 hours following. If freezing conditions exist before application, let masonry thaw thoroughly. Subfreezing temperatures will freeze/crystallize Saltguard® WB, inhibiting penetration and significantly impairing results. Surface and air temperatures should not exceed 95°F (35°C). Higher temperatures evaporate the water carrier, reducing penetration.

Equipment

Apply with brush, roller or low-pressure spray (20 psi). Set sprayer to produce a wet stream. Avoid atomization of the material. Make sure all containers used for mixing or handling are clean and uncontaminated.

APPLICATION

Before use, read "Preparation" and "Safety Information."

ALWAYS TEST each type of surface for suitability and results before overall application. Test using the following application instructions. Let test dry thoroughly before inspection. Mix well before applying.

DO NOT DILUTE OR ALTER MATERIAL, OR USE FOR PURPOSES OTHER THAN SPECIFIED.

Vertical Application Instructions

For best results, apply Saltguard® WB "wet-on-wet" to a visibly dry and absorbent surface.

Spray: saturate from the bottom up. Apply enough for a 4" to 8" (15 to 20 cm) rundown below the spray contact point. Let the first application penetrate for 5-10 minutes. Reapply in the same saturating manner. Less material will be needed for the second application.

Brush or roller: apply uniformly. Saturate the surface. Let Saltguard® WB penetrate for 5 to 10 minutes. Brush out heavy runs and drips that don't penetrate.

Horizontal Application Instructions

1. Apply Saltguard® WB in a single saturating application. Use enough to keep the surface wet for 2 to 3 minutes before penetrating.
2. Broom out all puddles thoroughly until they penetrate the surface. Wipe up all excess material.

Treated surfaces will dry to touch within 1 hour. Protect surfaces from rainfall for a minimum of 6 hours following treatment. Treated surfaces will be ready for pedestrian and vehicle traffic in 24 hours. Many surfaces may require several days to achieve full water repellent effectiveness.

 ©Copyright PROSOCO, Inc. 2002

Dense Surface Application Instructions
Apply a single coat. Use enough Saltquard WB to completely wet the surface without creating drips, puddles or rundown. DO NOT OVERAPPLY. Test for application rate.

Cleanup
Clean tools, equipment, and surfaces affected by overspray with soap and warm water.

Paint Adhesion
Surfaces treated with Saltguard® WB may be coated with silicone emulsion paints and many oil- base paints. Always test to assure adhesion. Adhesion may be improved if surface is pressure- rinsed and allowed to dry before application.

Adhesion of some cementitious coatings, plaster, stucco, etc., may be adversely affected. Such surface treatments should be installed and allowed to thoroughly cure before installation of Saltguard® WB.

Always test to verify compatibility between Saltguard® WB and other proposed surface treatments.

SAFETY INFORMATION

Caution. May cause eye and skin irritation. For use by professional applicators only. Keep out of reach of children.

Precautions:
Contains: Oligomeric alkyl alkoxysiloxane. Avoid eye contact. Wear safety glasses or splash goggles depending on application procedures. Avoid prolonged skin contact. If skin is sensitive or becomes irritated, wear rubber gloves. Wear long-sleeved work clothing or splash-resistant clothing as needed. Do not breath mists. May cause respiratory irritation. Wear a NIOSH-approved dust/mist respirator as needed. Wash thoroughly after handling. Generates ethyl and methyl alcohol during curing. Maintain adequate ventilation inside. **Storage and handling:** Store and transport upright with lid tightly in place. Store in a cool, dry place. Keep from freezing. Do not reuse or remove the label. **Do not alter,** dilute product or use for applications other than specified. **If spilled,** keep from drains and soil. Absorb with inert media. Dispose of contaminated absorbent, container and product in accordance with local, state and federal regulations. Read the MSDS and label for additional cautionary information.

First Aid
Ingestion: Call a physician, emergency room or poison control center immediately for instruction on properly inducing vomiting. Get medical assisatance.
Eye Contact: Rinse thoroughly for 15 minutes. Get immediate medical assistance.
Skin Contact: Remove contaminated clothing and rinse thoroughly for 15 minutes. Seek medical assistance if persistent irritation develops. Launder contaminated clothing before reuse.
Inhalation: Seek medical attention if irritation develops.

Shelf Life: 1 year from the date of manufacture in tightly sealed, unopened container.

24 Hour Emergency Information: INFOTRAC at 1-800-535-5053

VOC content =194 g/ L.

WARRANTY

The information and recommendations made are based on our own research and the research of others, and are believed to be accurate. However, no guarantee of their accuracy is made because we cannot cover every possible application of our products, nor anticipate every variation encountered in masonry surfaces, job conditions and methods used. The purchasers shall make their own tests to determine the suitability of such products for a particular purpose.

PROSOCO Inc. warrants this product to be free from defects. **Where permitted by law, PROSOCO makes no other warranties with respect to this product, express or implied, including without limitation the implied warranties of merchantability or fitness for particular purpose.** The purchaser shall be responsible to make his own tests to determine the suitability of this product for his particular purpose. PROSOCO's liability shall be limited in all events to supplying sufficient product to re- treat the specific areas to which defective product has been applied. Acceptance and use of this product absolves PROSOCO from any other liability, from whatever source, including liability for incidental, consequential or resultant damages whether due to breach of warranty, negligence or strict liability. This warranty may not be modified or extended by representatives of PROSOCO, its distributors or dealers.

CUSTOMER CARE

Factory personnel are available for product, environment and job- safety assistance with no obligation. Call 800- 255- 4255 and ask for Customer Care - technical support.

Factory- trained representatives are established in principal cities throughout the continental United States. Call Customer Care at 800- 255- 4255, or visit our website at www.prosoco.com, for the name of the Consolideck® representative in your area.

 ©Copyright PROSOCO, Inc. 2002