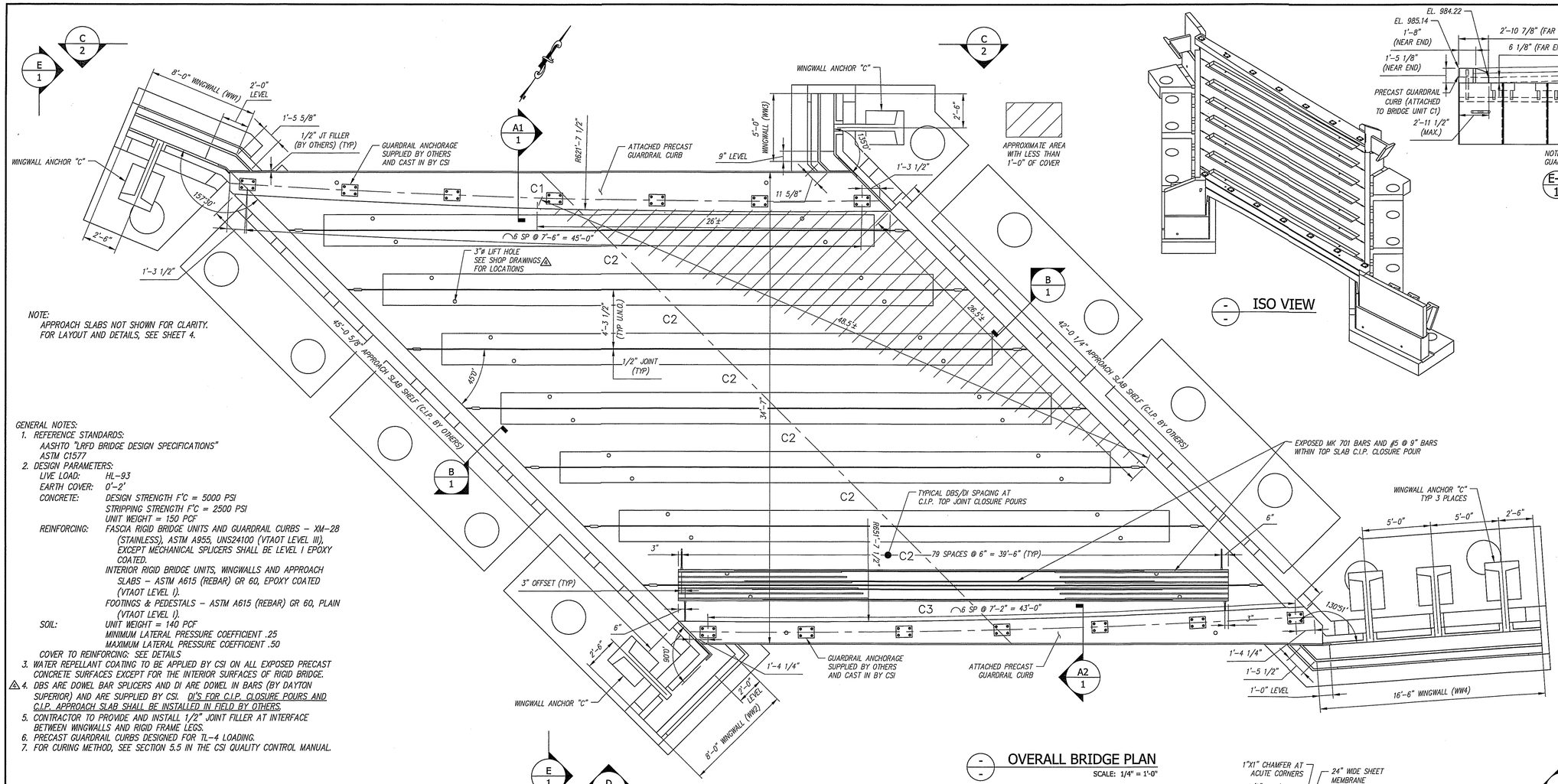

NOTE:
APPROACH SLABS NOT SHOWN FOR CLARITY.
FOR LAYOUT AND DETAILS, SEE SHEET 4.

GENERAL NOTES:

1. REFERENCE STANDARDS:
   AASHTO "LRFD BRIDGE DESIGN SPECIFICATIONS"
   ASTM C1577
2. DESIGN PARAMETERS:
   LIVE LOAD: HL-93
   EARTH COVER: 0'-2'
   CONCRETE: DESIGN STRENGTH F'C = 5000 PSI
   STRIPPING STRENGTH F'C = 2500 PSI
   UNIT WEIGHT = 150 PCF
   REINFORCING: FASCIA RIGID BRIDGE UNITS AND GUARDRAIL CURBS – XM-28 (STAINLESS), ASTM A955, UNS24100 (VTAOT LEVEL III), EXCEPT MECHANICAL SPLICERS SHALL BE LEVEL I EPOXY COATED.
   INTERIOR RIGID BRIDGE UNITS, WINGWALLS AND APPROACH SLABS – ASTM A615 (REBAR) GR 60, EPOXY COATED (VTAOT LEVEL I).
   FOOTINGS & PEDESTALS – ASTM A615 (REBAR) GR 60, PLAIN (VTAOT LEVEL I).
   SOIL: UNIT WEIGHT = 140 PCF
   MINIMUM LATERAL PRESSURE COEFFICIENT .25
   MAXIMUM LATERAL PRESSURE COEFFICIENT .50
   COVER TO REINFORCING: SEE DETAILS
3. WATER REPELLANT COATING TO BE APPLIED BY CSI ON ALL EXPOSED PRECAST CONCRETE SURFACES EXCEPT FOR THE INTERIOR SURFACES OF RIGID BRIDGE.
4. ⚠ DBS ARE DOWEL BAR SPLICERS AND DI ARE DOWEL IN BARS (BY DAYTON SUPERIOR) AND ARE SUPPLIED BY CSI. DI'S FOR C.I.P. CLOSURE POURS AND C.I.P. APPROACH SLAB SHALL BE INSTALLED IN FIELD BY OTHERS.
5. CONTRACTOR TO PROVIDE AND INSTALL 1/2" JOINT FILLER AT INTERFACE BETWEEN WINGWALLS AND RIGID FRAME LEGS.
6. PRECAST GUARDRAIL CURBS DESIGNED FOR TL-4 LOADING.
7. FOR CURING METHOD, SEE SECTION 5.5 IN THE CSI QUALITY CONTROL MANUAL.

⚠ SEE SHOP DRAWINGS FOR DETAILS OR ADDITIONAL REINFORCING NOT SHOWN ON THIS SHEET.

OVERALL BRIDGE PLAN
SCALE: 1/4" = 1'-0"

ISO VIEW

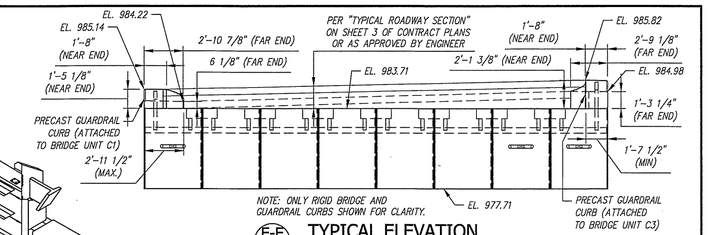

TYPICAL ELEVATION
E-E 1
SCALE: 3/16" = 1'-0"

RIGID BRIDGE, WINGWALL & GUARDRAIL CURB PIECE SCHEDULE (MK-FA5000SC30)

MARK	QTY	LENGTH	YDS	WEIGHT	
C1	1	4.29 '	16.36	33.13	TONS
C2	6	4.29 '	10.88	22.02	TONS
C3	1	4.29 '	17.63	35.71	TONS
WW1	1	8.00 '	2.41	5.78	TONS
WW2	1	8.00 '	2.32	5.59	TONS
WW3	1	5.00 '	1.29	3.51	TONS
WW4	1	16.50 '	4.68	12.18	TONS

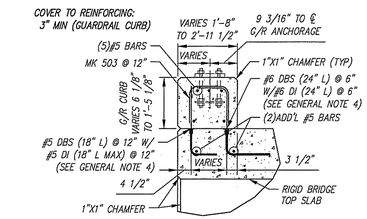

SECTION AT NORTH ATTACHED GUARDRAIL CURB
A1 1
SCALE: 1/2" = 1'-0"

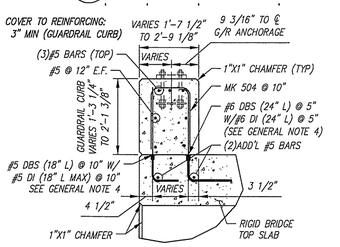

SECTION AT SOUTH ATTACHED GUARDRAIL CURB
A2 1
SCALE: 1/2" = 1'-0"

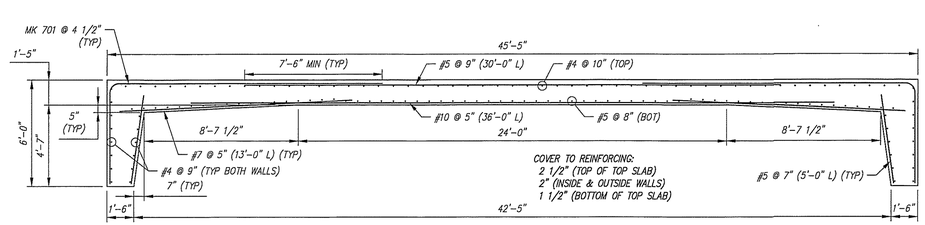

TYPICAL RIGID BRIDGE REINFORCING SECTION
SCALE: 1/4" = 1'-0"

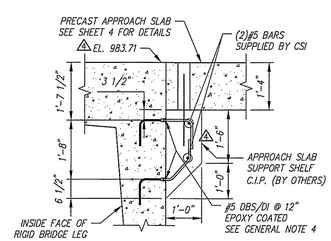

APPR. SLAB SUPPORT SHELF (TYPICAL SECTION)
B 1
SCALE: 1/2" = 1'-0"

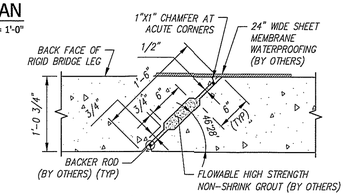

RIGID FRAME LEG JOINT DETAIL
SCALE: 1" = 1'-0"

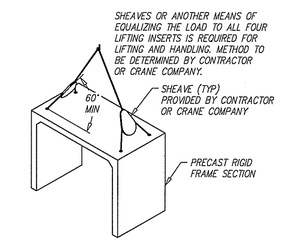

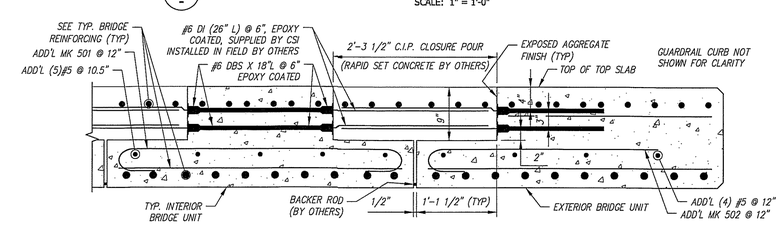

RIGID FRAME TOP SLAB JOINT DETAIL
SCALE: 1" = 1'-0"

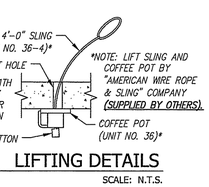

LIFTING DETAILS
SCALE: N.T.S.

Contractor is to verify that all information shown on drawings has been thoroughly checked, complies with the contract documents and is adequate to meet the field conditions. Some dimensions and details may differ slightly from contract drawings to accommodate the manufacturing or design process. Approval of this drawing indicates that any deviation from the contract documents has been reviewed and found to be acceptable. Production will not commence until receipt of signed, approved shop drawings.

This drawing contains information proprietary to CONCRETE SYSTEMS, INC. This drawing is disclosed with the understanding that it will be retained in confidence and its use limited solely to the purpose for which it is disclosed. It is understood that no reproduction of this drawing is authorized without permission from CONCRETE SYSTEMS, INC. and that it will be returned to CONCRETE SYSTEMS, INC. upon request.

STATE OF VERMONT
CHRISTOPHER M. KUCK
NO. 77928
Structural
LICENSED
PROFESSIONAL ENGINEER
4/26/16

STRUCTURAL DESIGN OF RIGID BRIDGE, GUARDRAIL CURBS AND WINGWALLS ONLY

Rev.	Date	DESCRIPTION	By
10			
9			
8			
7			
6			
5			
4	04/22/2016	SEE REV4 TRIANGLES.	AK
3	04/13/2016	ADDED STRIPPING STRENGTH AND CURING METHOD NOTES.	AK
2	04/08/2016	SEE REV2 TRIANGLES.	AK
1	03/23/2016	SEE REV1 TRIANGLES.	AK

REVISIONS

This drawing is based upon information provided from the following documents and/or sources:
Engineer: STANTEC CONSULTING SERVICES, INC.
Project No:
Drawings: PROJECT PLANS
Specifications:
Other Sources:

CSI Concrete Systems Inc.
9 Commercial St., Hudson, NH,03051
Phone 603-889-4163
Fax 603-889-2417

STATE AGENCY
VTrans Working To Get You There
Drawn By: A. KOSTENKO Date: 02/03/2016
Reviewed By Date
Approved By Date

VTAOT PROJ. NO.: BRF 0151(21)

MILLER CONSTRUCTION, INC.
ROUTE 106 BRIDGE REPLACEMENT T.H. 61 (KENDALL ROAD)
WOODSTOCK, VT

D
PRECAST RIGID BRIDGE LAYOUT & DETAILS
Drawing No. R-S22624-L01A
REV 4
Quantity: Project No: SHEET 1 OF 4

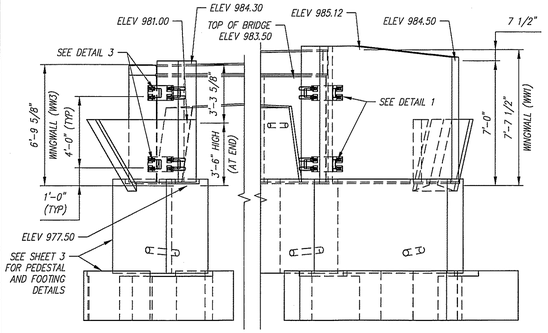

C-C / 1 WEST END ELEVATION
SCALE: 1/4" = 1'-0"

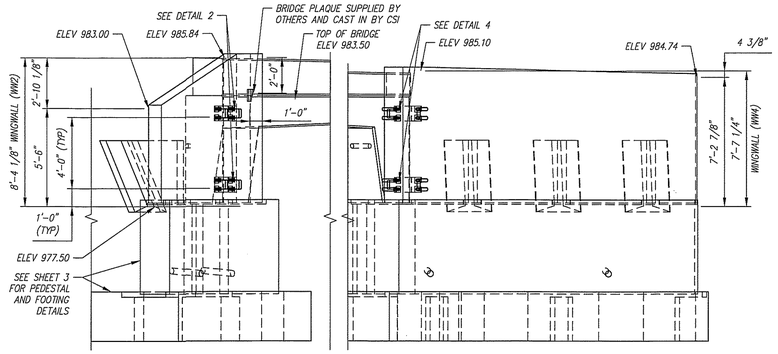

D-D / 1 EAST END ELEVATION
SCALE: 1/4" = 1'-0"

WINGWALL GENERAL NOTES:
1. REFERENCE STANDARD:
   AASHTO LRFD SPECIFICATIONS
2. DESIGN PARAMETERS:
   SOIL BEARING: 3000 PSF (TO BE VERIFIED BY ENGINEER)
   CONCRETE: DESIGN STRENGTH F'C = 4000 PSI
   △3 STRIPPING STRENGTH F'C = 2500 PSI
   UNIT WEIGHT = 150 PCF
   △3 REINFORCING: ASTM A615 (REBAR), GRADE 60, EPOXY COATED (VTAOT LEVEL I).
   SOIL: UNIT WEIGHT = 140 PCF
   MINIMUM LATERAL PRESSURE COEFFICIENT .25
   MAXIMUM LATERAL PRESSURE COEFFICIENT .50
   COVER TO REINFORCING: 2" U.N.O.
3. WINGWALLS HAVE BEEN DESIGNED FOR GENERAL SITE CONDITIONS. THE PROJECT ENGINEER SHALL BE RESPONSIBLE FOR THE STRUCTURE'S SUITABILITY TO THE EXISTING SITE CONDITIONS AND FOR THE HYDRAULIC EVALUATION, INCLUDING SCOUR AND CONFIRMATION OF SOIL CONDITIONS.
4. PRIOR TO CONSTRUCTION, CONTRACTOR MUST VERIFY ALL ELEVATIONS SHOWN THROUGH THE ENGINEER.
△3 5. FOR CURING METHOD, SEE SECTION 5.5 IN THE CSI QUALITY CONTROL MANUAL.

△3 SEE SHOP DRAWINGS FOR ADDITIONAL DETAILS.

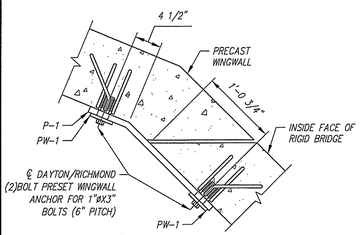

1/2 DETAIL
Scale: 1 = 1'-0"

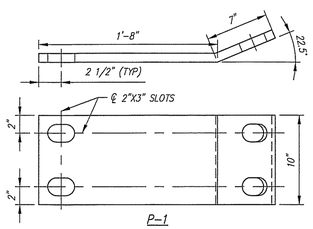

P-1
(℄ 1" X 10" X 14")
(GALVANIZED AS PER ASTM A153)
(TOTAL REQUIRED = 2)

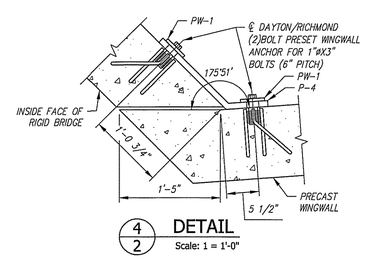

4/2 DETAIL
Scale: 1 = 1'-0"

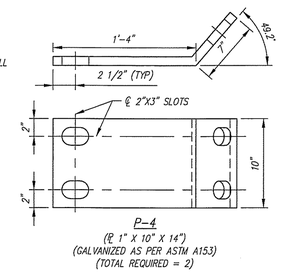

P-4
(℄ 1" X 10" X 14")
(GALVANIZED AS PER ASTM A153)
(TOTAL REQUIRED = 2)

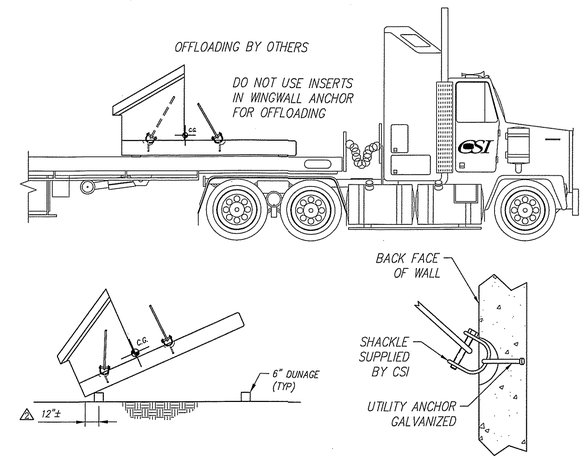

WINGWALL LIFTING/OFFLOADING & TRIPPING DETAILS
Scale: N.T.S.

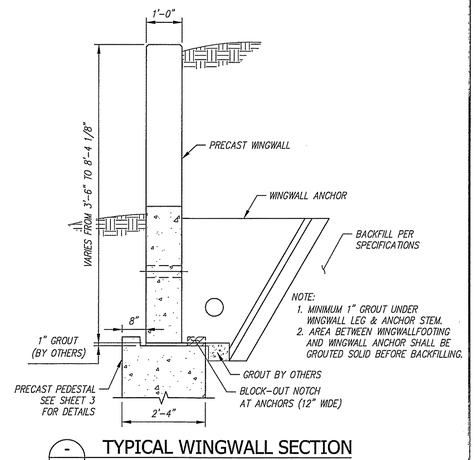

NOTE:
1. MINIMUM 1" GROUT UNDER WINGWALL LEG & ANCHOR STEM.
2. AREA BETWEEN WINGWALLFOOTING AND WINGWALL ANCHOR SHALL BE GROUTED SOLID BEFORE BACKFILLING.

TYPICAL WINGWALL SECTION
SCALE: 1/2" = 1'-0"

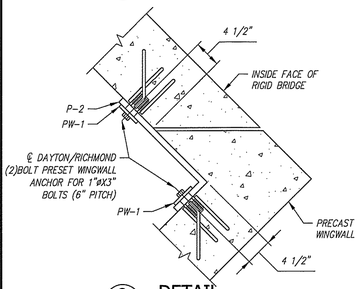

2/2 DETAIL
Scale: 1 = 1'-0"

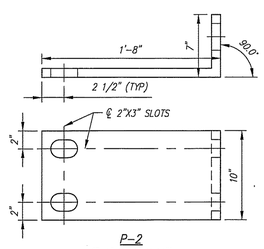

P-2
(℄ 1" X 10" X 14")
(GALVANIZED AS PER ASTM A153)
(TOTAL REQUIRED = 2)

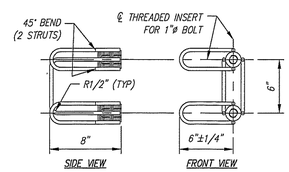

DAYTON/RICHMOND TWO BOLT PRESET ANCHOR

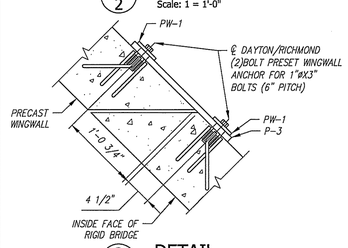

3/2 DETAIL
Scale: 1 = 1'-0"

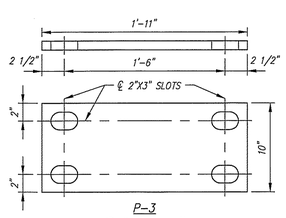

P-3
(℄ 1" X 10" X 14")
(GALVANIZED AS PER ASTM A153)
(TOTAL REQUIRED = 2)

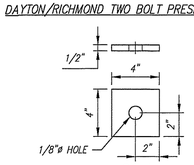

PW-1
(℄ WASHER, 1/2" X 4" X 4")
(GALVANIZED AS PER ASTM A153)
(TOTAL REQUIRED = 32)

BACKFILL DESCRIPTION							
Group Classification	A-1		A-3	A-2			
	A-1-a	A-1-b		A-2-4	A-2-5	A-2-6	A-2-7
Sieve Analysis, Percent Passing							
No. 10	50 max.						
No. 40	30 max.	50 max.	51 min.				
No. 200	15 max.	25 max.	10 max.	35 max.	35 max.	35 max.	35 max.
Characteristics of Fraction Passing No. 40							
Liquid Limit				40 max.	41 min.	40 max.	41 min.
Plasticity Index	6 max.		N.P.	10 max.	10 max.	11 min.	11 min.
Usual Types of Significant Constituent Materials	Stone Fragments, Gravel & Sand		Fine Sand	Silty or Clayey Gravel and Sand			
General Rating as Subgrade	Excellent to Good						

NOTES
1. BACKFILLING OPERATIONS WITHIN THE C.B.Z. SHALL BE PERFORMED IN LIFTS OF 8" OR LESS (LOOSE DEPTH).
2. MAXIMUM DRY DENSITY SHALL BE DETERMINED BY AASHTO T-99 OR OTHER APPROVED METHODS.
3. BACKFILL SHALL BE COMPACTED IN LAYERS UNTIL THE DENSITY IS NOT LESS THAN 95% OF THE MAXIMUM DRY DENSITY.

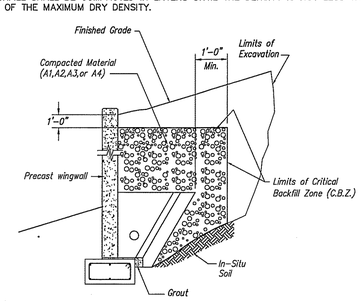

WINGWALL BACKFILL REQUIREMENTS

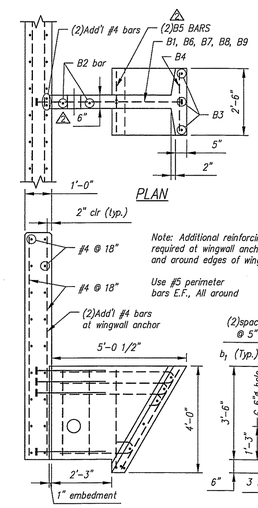

PLAN

Note: Additional reinforcing required at wingwall anchors and around edges of wingwall

Use #5 perimeter bars E.F., All around

△3 TYP. SECTION

BAR LIST					
MARK	QTY.	SIZE	a	TYPE	LENGTH
B1	4	#6	2'-7"	3	——
B2	2	#5	——	Str.	3'-2"
B3	4	#5	——	Str.	4'-2"
B4	7	#5	——	Str.	2'-2"
B5	2	#5	3'-8"	2	——
B6	1	#5	2'-9"	1	——
B7	1	#5	3'-9"	1	——
B8	1	#5	4'-0"	1	——
B9	1	#5	4'-3"	1	——

Note: "Str." denotes straight bar. Standard clearance = 2"

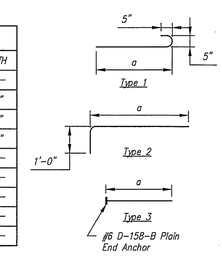

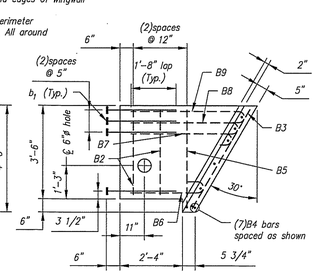

PRECAST ANCHOR TYPE C

Contractor is to verify that all information shown on drawings has been thoroughly checked, complies with the contract documents and is adequate to meet the field conditions. Some dimensions and details may differ slightly from contract drawings to accommodate the manufacturing or design process. Approval of this drawing indicates that any deviation from the contract documents has been reviewed and found to be acceptable. Production will not commence until receipt of signed, approved shop drawings.

This drawing contains information proprietary to CONCRETE SYSTEMS, INC. This drawing is disclosed with the understanding that it will be retained in confidence and its use limited solely to the purpose for which it is disclosed. It is understood that no reproduction of this drawing is authorized without permission from CONCRETE SYSTEMS, INC. and that it will be returned to CONCRETE SYSTEMS, INC. upon request.

STATE OF VERMONT
CHRISTOPHER M. YORK
NO. 77928
Structural
LICENSED
PROFESSIONAL ENGINEER

STRUCTURAL DESIGN OF RIGID BRIDGE, GUARDRAIL CURBS AND WINGWALLS ONLY

Rev.	Date	DESCRIPTION	By
10			
9			
8			
7			
6			
5			
4			
3	04/13/2016	ADDED STRIPPING STRENGTH AND CURING METHOD NOTES.	AK
2	04/08/2016	SEE REV2 TRIANGLES.	AK
1	03/23/2016	SEE REV1 TRIANGLES.	AK

REVISIONS

This drawing is based upon information provided from the following documents and/or sources:
Engineer: STANTEC CONSULTING SERVICES, INC.
Project No:
Drawings: PROJECT PLANS
Specifications:
Other Sources:

CSI Concrete Systems Inc.
9 Commercial St., Hudson, NH,03051
Phone 603-889-4163
Fax 603-889-2417

STATE AGENCY
VTrans Working to Get You There

Drawn By A KOSTENKO	Date 02/03/2016
Reviewed By	Date
Approved By	Date

VTAOT PROJ. NO.: BRF 0151(21)

MILLER CONSTRUCTION, INC.
ROUTE 106 BRIDGE REPLACEMENT T.H. 61 (KENDALL ROAD)
WOODSTOCK, VT

D — ELEVATIONS AND WINGWALL DETAILS
Drawing No. R-S22624-L01B
REV 3
Quantity: Project No: SHEET 2 OF 4

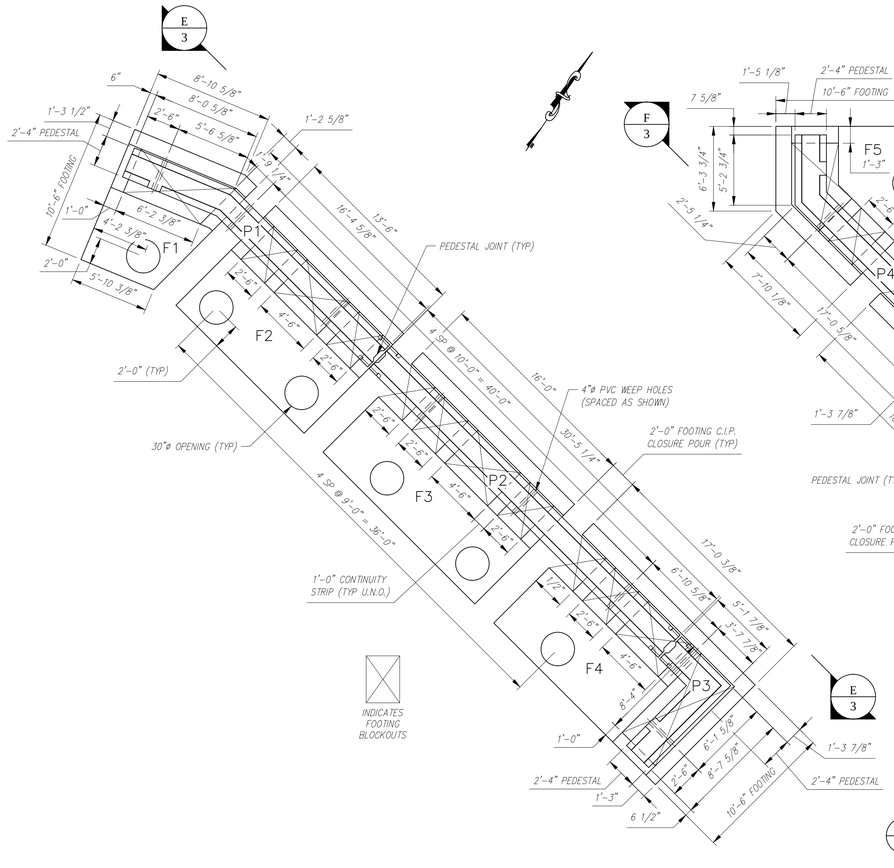

FOOTING & PEDESTAL PLAN
SCALE: 3/16" = 1'-0"

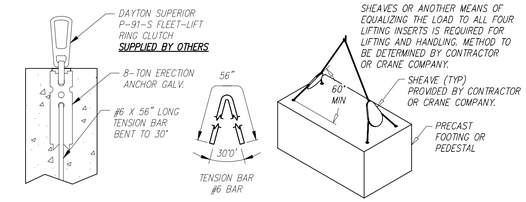

TYPICAL LIFTING DETAILS
SCALE: N.T.S.

FOOTING AND PEDESTAL PIECE SCHEDULE (MX-FA5000SC30)					
MARK	QTY	LENGTH	YDS	WEIGHT	
F1	1	7.99 '	5.52	11.18	TONS
F2	1	13.50 '	9.90	20.05	TONS
F3	1	16.00 '	11.68	23.66	TONS
F4	1	17.03 '	11.20	22.69	TONS
F5	1	9.81 '	6.84	13.84	TONS
F6	1	16.00 '	11.68	23.66	TONS
F7	1	18.50 '	13.46	27.27	TONS
F8	1	18.11 '	12.59	25.49	TONS
P1	1	23.98 '	10.53	21.31	TONS
P2	2	30.44 '	13.35	27.04	TONS
P3	1	11.46 '	5.01	10.15	TONS
P4	1	21.32 '	9.36	18.95	TONS
P5	1	19.96 '	8.75	17.72	TONS

△ SEE SHOP DRAWINGS FOR ADDITIONAL DETAILS.

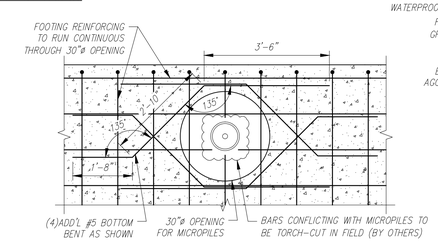

ADDITIONAL REINFORCING AT 30" OPENINGS
SCALE: 1/2" = 1'-0"

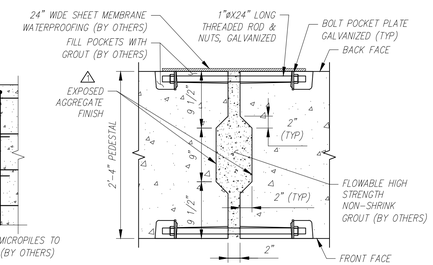

PEDESTAL JOINT DETAIL
SCALE: N.T.S.

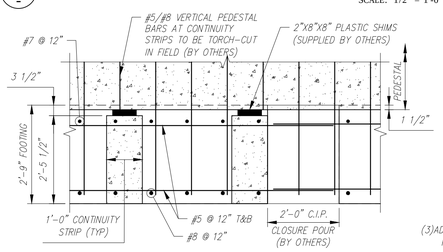

TYP. SECTION THROUGH CONTINUITY STRIPS
SCALE: 1/2" = 1'-0"

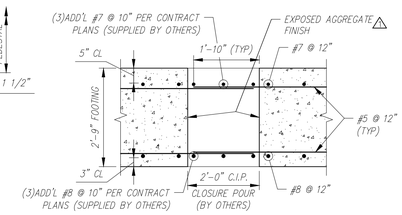

FOOTING CLOSURE POUR DETAIL
SCALE: 1/2" = 1'-0"

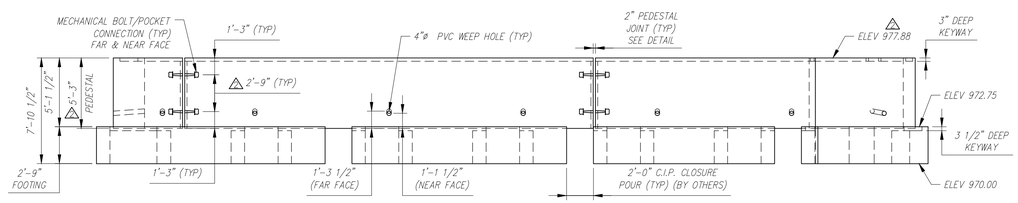

SOUTH FOOTING/PEDESTAL ELEVATION
SCALE: 3/16" = 1'-0"

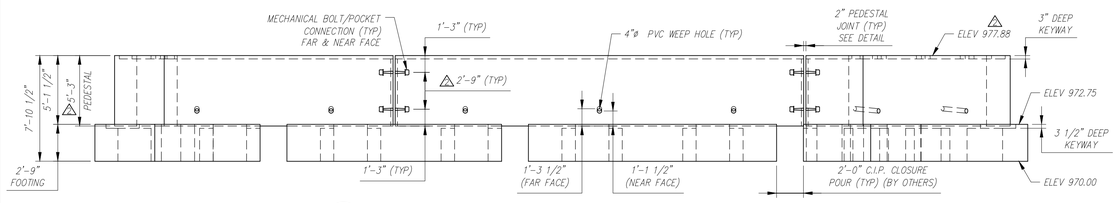

NORTH FOOTING/PEDESTAL ELEVATION
SCALE: 3/16" = 1'-0"

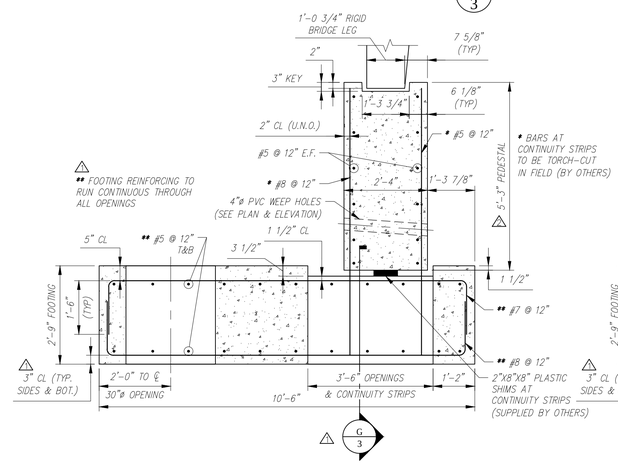

FOOTING & PEDESTAL SECTION (AT RIGID BRIDGE LEG)
SCALE: 1/2" = 1'-0"

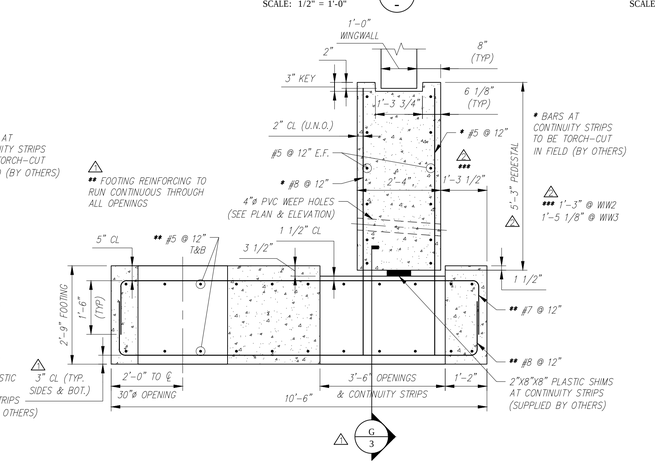

FOOTING & PEDESTAL SECTION (AT WINGWALLS)
SCALE: 1/2" = 1'-0"

Contractor is to verify that all information shown on drawings has been thoroughly checked, complies with the contract documents and is adequate to meet the field conditions. Some dimensions and details may differ slightly from contract drawings to accommodate the manufacturing or design process. Approval of this drawing indicates that any deviation from the contract documents has been reviewed and found to be acceptable. Production will not commence until receipt of signed, approved shop drawings.

This drawing contains information proprietary to CONCRETE SYSTEMS, INC. This drawing is disclosed with the understanding that it will be retained in confidence and its use limited solely to the purpose for which it is disclosed. It is understood that no reproduction of this drawing is authorized without permission from CONCRETE SYSTEMS, INC. and that it will be returned to CONCRETE SYSTEMS, INC. upon request.

Rev.	Date	DESCRIPTION	By
10			
9			
8			
7			
6			
5			
4			
3			
2			
1	04/08/2016	SEE REV 1 TRIANGLES.	AK

REVISIONS

This drawing is based upon information provided from the following documents and/or sources:
Engineer: STANTEC CONSULTING SERVICES, INC.
Project No:
Drawings: PROJECT PLANS
Specifications:
Other Sources:

Concrete Systems Inc.
9 Commercial St., Hudson, NH 03051
Phone 603-889-4163
Fax 603-889-2417

STATE AGENCY
VTrans Working to Get You There

Drawn By A. KOSTENKO	Date 03/03/2016
Reviewed By	Date
Approved By	Date

VTAOT PROJ. NO.: BRF 0151(21)

MILLER CONSTRUCTION, INC.
ROUTE 106 BRIDGE REPLACEMENT T.H. 61 (KENDALL ROAD)
WOODSTOCK, VT

D — FOOTING/PEDESTAL PLAN AND DETAILS — REV 1
Drawing No. R-S22624-L01C

Quantity: | Project No: | SHEET 3 OF 4

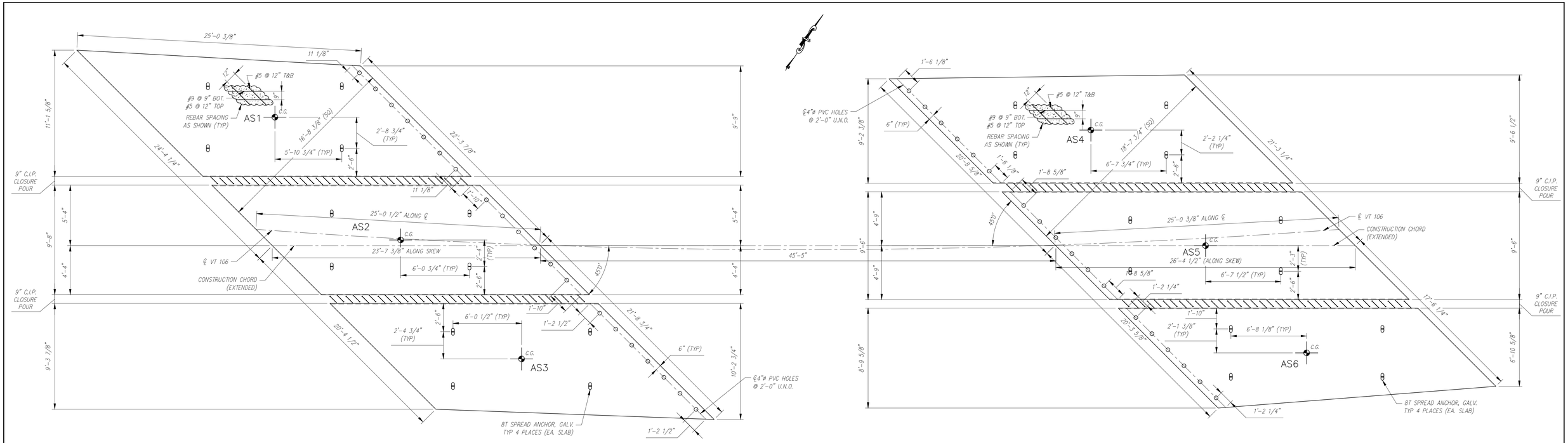

APPROACH SLAB PLAN

SCALE: 1/4" = 1'-0"

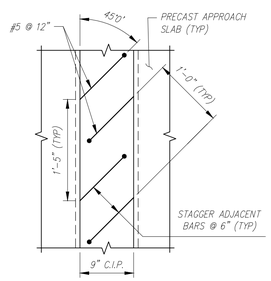

TYPICAL C.I.P. CLOSURE POUR PLAN

SCALE: 1" = 1'-0"

⚠ SEE SHOP DRAWINGS FOR ADDITIONAL DETAILS.

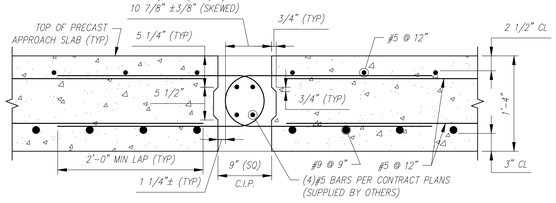

TYPICAL C.I.P. CLOSURE POUR SECTION

SCALE: 1" = 1'-0"

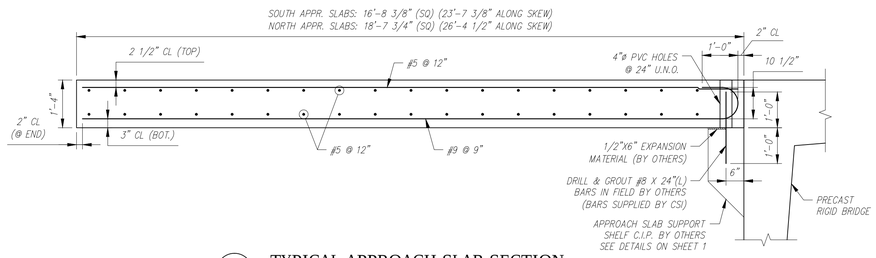

TYPICAL APPROACH SLAB SECTION

SCALE: 1/2" = 1'-0"

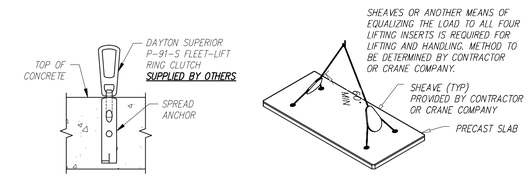

APPROACH SLAB LIFTING DETAILS

SCALE: N.T.S.

APPROACH SLAB PIECE SCHEDULE (MX-FA5000SC30)					
MARK	QTY	LENGTH	YDS	WEIGHT	
AS1	1	23.61 '	12.18	24.67	TONS
AS2	1	23.61 '	11.27	22.83	TONS
AS3	1	23.61 '	11.40	23.09	TONS
AS4	1	26.38 '	12.20	24.71	TONS
AS5	1	26.38 '	12.37	25.06	TONS
AS6	1	26.38 '	10.22	20.70	TONS

Contractor is to verify that all information shown on drawings has been thoroughly checked, complies with the contract documents and is adequate to meet the field conditions. Some dimensions and details may differ slightly from contract drawings to accommodate the manufacturing or design process. Approval of this drawing indicates that any deviation from the contract documents has been reviewed and found to be acceptable. Production will not commence until receipt of signed, approved shop drawings.

This drawing contains information proprietary to CONCRETE SYSTEMS, INC. This drawing is disclosed with the understanding that it will be retained in confidence and its use limited solely to the purpose for which it is disclosed. It is understood that no reproduction of this drawing is authorized without permission from CONCRETE SYSTEMS, INC. and that it will be returned to CONCRETE SYSTEMS, INC. upon request.

Rev.	Date	DESCRIPTION	By
10			
9			
8			
7			
6			
5			
4			
3			
2			
1	04/08/2016	SEE REV 1 TRIANGLES.	AK

REVISIONS

This drawing is based upon information provided from the following documents and/or sources:
Engineer: STANTEC CONSULTING SERVICES, INC.
Project No:
Drawings: PROJECT PLANS
Specifications:
Other Sources:

Concrete Systems Inc.
9 Commercial St., Hudson, NH,03051
Phone 603-889-4163
Fax 603-889-2417

STATE AGENCY
VTrans Working to Get You There

Drawn By	Date
A KOSTENKO	03/03/2016
Reviewed By	Date
Approved By	Date

VTAOT PROJ. NO.: BRF 0151(21)

MILLER CONSTRUCTION, INC.
ROUTE 106 BRIDGE REPLACEMENT T.H. 61 (KENDALL ROAD)
WOODSTOCK, VT

D — APPROACH SLAB PLAN AND DETAILS — REV 1
Drawing No. R-S22624-L01D
Quantity: Project No: SHEET 4 OF 4

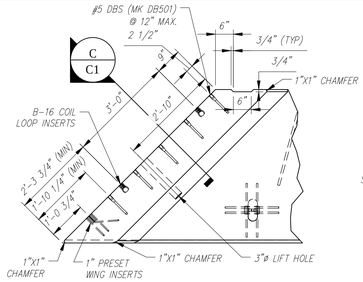

1 / C2 ENLARGED PLAN
SCALE: 1/2" = 1'-0"

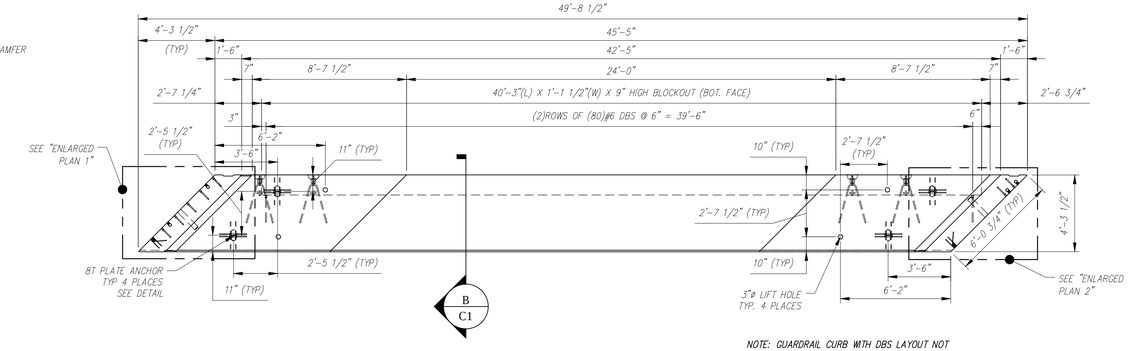

- / - PLAN (CASTING POSITION)
SCALE: 1/4" = 1'-0"

NOTE: GUARDRAIL CURB WITH DBS LAYOUT NOT SHOWN FOR CLARITY. FOR DETAILS, SEE GUARDRAIL CURB PLAN AND ELEVATION.

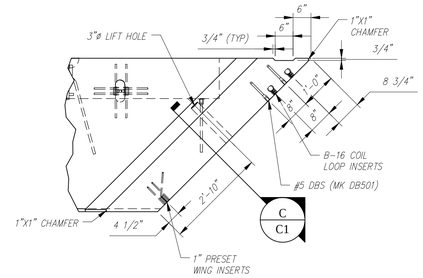

2 / C2 ENLARGED PLAN
SCALE: 1/2" = 1'-0"

NOTES:
1. ALL REINFORCING TO BE STAINLESS (XM-28), EXCEPT ALL MECHANICAL SPLICERS (DBS/DI'S) OR TENSION BARS FOR 8T ERECTION ANCHORS TO BE EPOXY COATED.
2. COVER TO REINFORCING: SEE DETAILS
3. SILANE-SILOXANE TO BE APPLIED IN FIELD BY OTHERS.

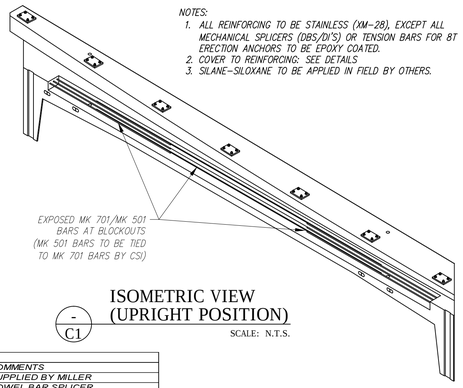

- / C1 ISOMETRIC VIEW (UPRIGHT POSITION)
SCALE: N.T.S.

A / C1

A / C1

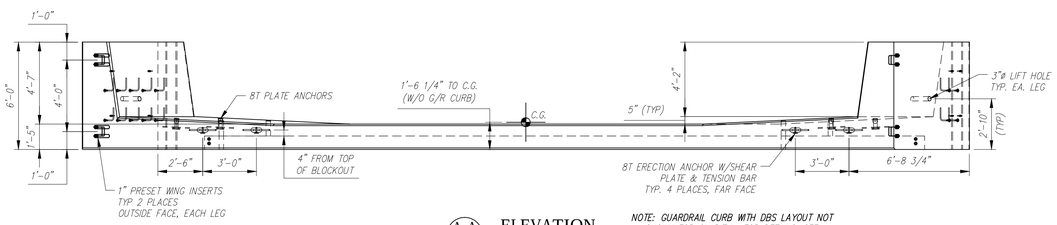

A-A / C1 ELEVATION
SCALE: 1/4" = 1'-0"

NOTE: GUARDRAIL CURB WITH DBS LAYOUT NOT SHOWN FOR CLARITY. FOR DETAILS, SEE GUARDRAIL CURB PLAN AND ELEVATION.

C1 - BILL OF MATERIALS / EMBEDS				
CSI ID#	DESCRIPTION	QTY	UM	COMMENTS
SBO	B-16 COIL LOOP INSERTS	8	EA	SUPPLIED BY MILLER
DTJ	DBSAE #6 X 24" EPOXY	92	EA	DOWEL BAR SPLICER
DTJ	8TON ERECTION ANCHOR GALV QL149G	4	EA	W/SHEAR PLATE & TENSION BAR
DTJ	8TON PLATE ANCHOR GALV QL042G	4	EA	W/(4) #4 X 18" BARS
EM-00005	1" X 8" PRESET WING INSERTS	4	EA	
EM-00013	DBSAE #5 X 18" EPOXY	59	EA	DOWEL BAR SPLICER
EM-00015	DBSAE #6 X 18" EPOXY	160	EA	DOWEL BAR SPLICER
EM-00033	3" FOAM CORE PVC	7	FT	
DTJ	REBAR #4 STAINLESS (XM-28)	236	LB	
DTJ	REBAR #5 STAINLESS (XM-28)	1105	LB	
DTJ	REBAR #7 STAINLESS (XM-28)	1553	LB	
DTJ	REBAR #10 STAINLESS (XM-28)	1549	LB	
MX-FA5000SC30	MIX DESIGN - FLY ASH 5000 SELF COMPACTIN	12.13	CY	
C1 GUARDRAIL CURB - BILL OF MATERIALS / EMBEDS				
SBO	GUARDRAIL ANCHORAGE	7	EA	SUPPLIED BY MILLER
DTJ	DI # 6 X 24" EPOXY	92	EA	DOWEL IN
EM-00021	DI #5 X 18" EPOXY	45	EA	
EM-00033	3" FOAM CORE PVC	3	FT	
DTJ	REBAR #5 STAINLESS (XM-28)	451	LB	
MX-FA5000SC30	MIX DESIGN - FLY ASH 5000 SELF COMPACTIN	4.23	CY	
SHIP-LOOSE - BILL OF MATERIALS				
EM-00021	DI #5 X 18" EPOXY	14	EA	
DTJ	DI # 6 X 26" EPOXY	160	EA	DOWEL IN

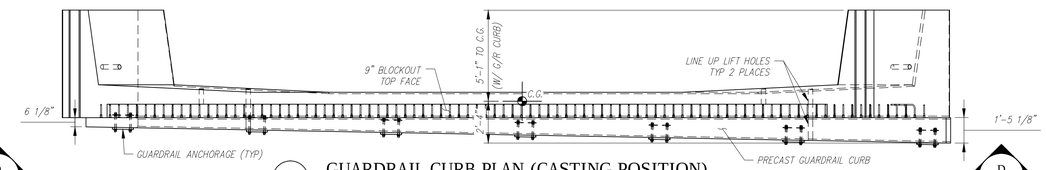

D / C1

- / - GUARDRAIL CURB PLAN (CASTING POSITION)
SCALE: 1/4" = 1'-0"

D / C1

ALL REBAR TO BE STAINLESS

C1 Rebar Schedule				
MK		QTY	LENGTH	
401A	#4	48	2 '- 10 "	
401B	#4	10	5 '- 8.5 "	MAX
402	#4	28	5 '- 8.5 "	
501	#5	6	30 '- 0 "	
502	#5	22	5 '- 0 "	
503A	#5	58	3 '- 11.5 "	
503B	#5	16	5 '- 8.5 "	MAX
504	#5	41	3 '- 11 "	
505	#5	12	24 '- 0 "	
701	#7	24	20 '- 10 "	
702	#7	20	13 '- 0 "	
1001	#10	10	36 '- 0 "	

ALL REBAR TO BE STAINLESS

C1 G/R Curb Rebar Schedule				
MK		QTY	LENGTH	
505	#5	10	24 '- 0 "	
506	#5	48	4 '- 0 "	MAX

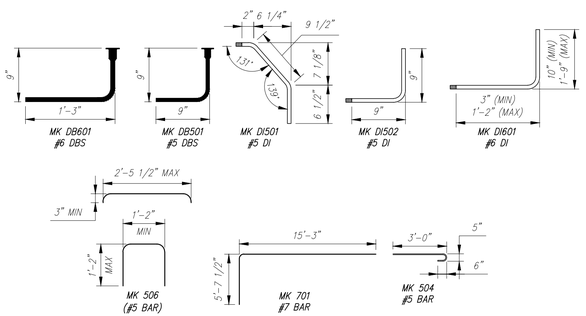

- / C1 BENDING SCHEDULE
SCALE: N.T.S.

COVER TO REINFORCING:
3" MIN (GUARDRAIL CURB)

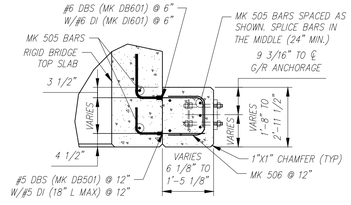

E / C1 GUARDRAIL CURB SECTION
SCALE: 1/2" = 1'-0"

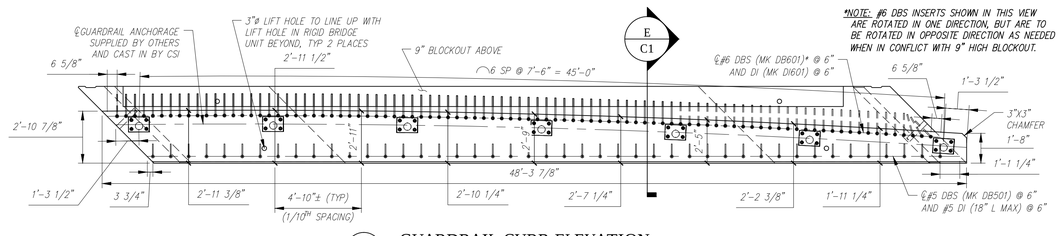

D-D / C1 GUARDRAIL CURB ELEVATION
SCALE: 1/4" = 1'-0"

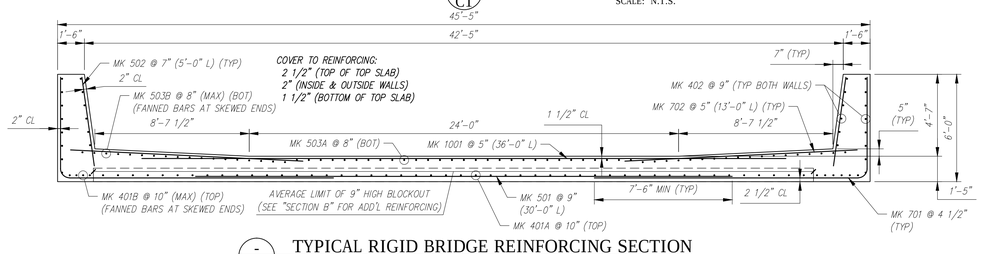

- / C1 TYPICAL RIGID BRIDGE REINFORCING SECTION
SCALE: 1/4" = 1'-0"

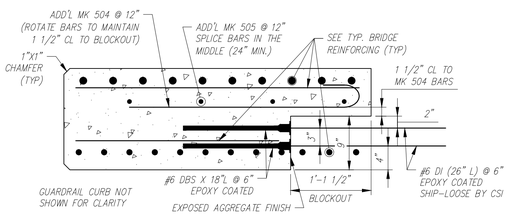

B / C1 SECTION
SCALE: 1" = 1'-0"

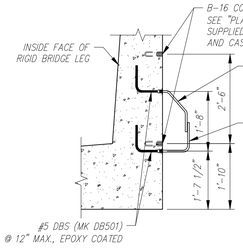

C / C1 SECTION
SCALE: 1/2" = 1'-0"

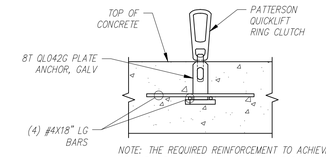

NOTE: THE REQUIRED REINFORCEMENT TO ACHIEVE 8T CAPACITY ARE (4) #4X18" LG REINFORCING BARS. TWO BARS ARE PLACED DIRECTLY ON THE BOTTOM PLATE AND THE OTHER TWO CRISSCROSS DIRECTLY ON TOP OF THE FIRST BARS. THESE MUST BE SECURED IN PLACE AND MAINTAIN CONTACT WITH THE PLATE.

- / C1 PLATE ANCHOR DETAIL
SCALE: 1/2" = 1'-0"

PIECE QUANTITY: 1 EACH
WEIGHT: 33.13 TONS

Contractor is to verify that all information shown on drawings has been thoroughly checked, complies with the contract documents and is adequate to meet the field conditions. Some dimensions and details may differ slightly from contract drawings to accommodate the manufacturing or design process. Approval of this drawing indicates that any deviation from the contract documents has been reviewed and found to be acceptable. Production will not commence until receipt of signed, approved shop drawings.

This drawing contains information proprietary to CONCRETE SYSTEMS, INC. This drawing is disclosed with the understanding that it will be retained in confidence and its use limited solely to the purpose for which it is disclosed. It is understood that no reproduction of this drawing is authorized without permission from CONCRETE SYSTEMS, INC. and that it will be returned to CONCRETE SYSTEMS, INC. upon request.

Rev.	Date	DESCRIPTION	By
10			
9			
8			
7			
6			
5			
4			
3			
2			
1			

REVISIONS

This drawing is based upon information provided from the following documents and/or sources:
Engineer: STANTEC CONSULTING SERVICES, INC.
Project No:
Drawings: PROJECT PLANS
Specifications:
Other Sources:

Concrete Systems Inc.
9 Commercial St., Hudson, NH,03051
Phone 603-889-4163
Fax 603-889-2417

STATE AGENCY
VTrans Working to Get You There

Drawn By	Date
A KOSTENKO	04/22/2016
Reviewed By	Date
Approved By	Date

VTAOT PROJ. NO.: BRF 0151(21)

MILLER CONSTRUCTION, INC.
ROUTE 106 BRIDGE REPLACEMENT T.H. 61 (KENDALL ROAD)
WOODSTOCK, VT

D — RIGID BRIDGE SHOP DRAWING – C1 — REV 0
Drawing No. R-S22624-C1
Quantity: Project No: SHEET C1 OF

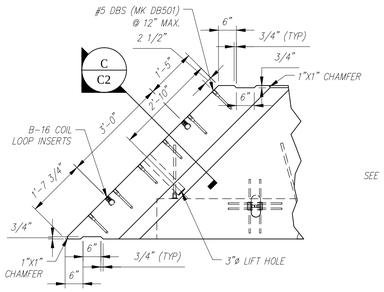

1 / C2 ENLARGED PLAN
SCALE: 1/2" = 1'-0"

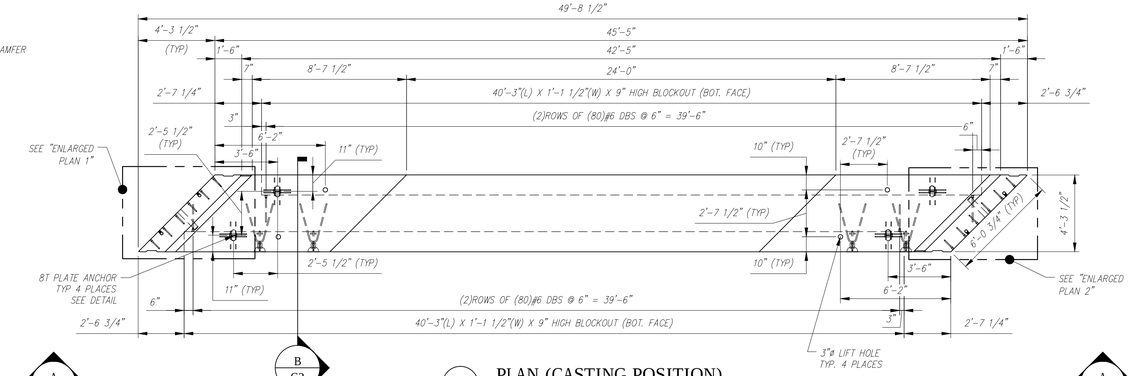

- / - PLAN (CASTING POSITION)
SCALE: 1/4" = 1'-0"

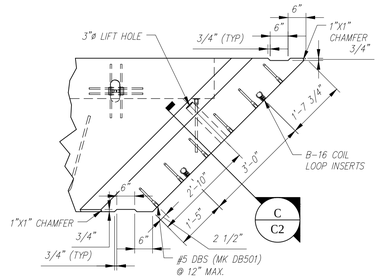

2 / C2 ENLARGED PLAN
SCALE: 1/2" = 1'-0"

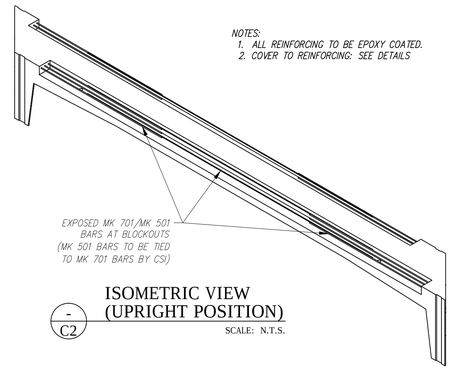

NOTES:
1. ALL REINFORCING TO BE EPOXY COATED.
2. COVER TO REINFORCING: SEE DETAILS

- / C2 ISOMETRIC VIEW (UPRIGHT POSITION)
SCALE: N.T.S.

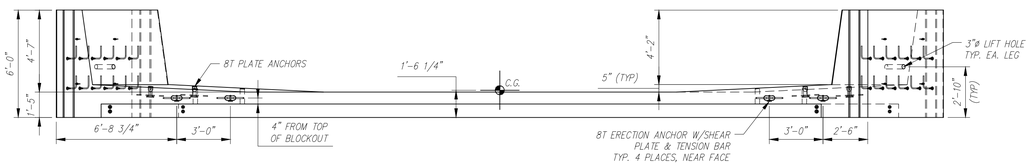

A-A / C1 ELEVATION
SCALE: 1/4" = 1'-0"

C2 - BILL OF MATERIALS / EMBEDS				
CSI ID#	DESCRIPTION	QTY	UM	COMMENTS
SBO	B-16 COIL LOOP INSERTS	8	EA	SUPPLIED BY MILLER
DTJ	8TON ERECTION ANCHOR GALV QL149G	4	EA	W/SHEAR PLATE & TENSION BAR
DTJ	8TON PLATE ANCHOR GALV QL042G	4	EA	W/(4) #4 X 18" BARS
EM-00013	DBSAE #5 X 18" EPOXY	24	EA	DOWEL BAR SPLICER
EM-00015	DBSAE #6 X 18" EPOXY	320	EA	DOWEL BAR SPLICER
EM-00033	3" FOAM CORE PVC	7	FT	
RM-00014	REBAR #4 EPOXY- GR 60 40'	153	LB	
RM-00016	REBAR #5 EPOXY- GR 60 40'	1159	LB	
RM-00010	REBAR #7 EPOXY-GR 60 40'	1553	LB	
RM-00093	REBAR #10 EPOXY-GR 60	1549	LB	
MX-FA5000SC30	MIX DESIGN - FLY ASH 5000 SELF COMPACTIN	10.88	CY	
SHIP-LOOSE - BILL OF MATERIALS				
EM-00021	DI #5 X 18" EPOXY	24	EA	
DTJ	DI # 6 X 26" EPOXY	320	EA	DOWEL IN

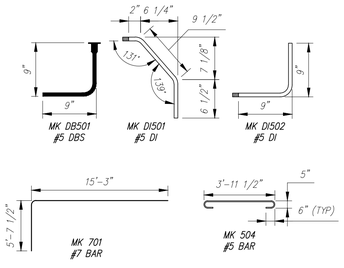

ALL REBAR TO BE EPOXY COATED

C2 Rebar Schedule				
MK		QTY	LENGTH	
401	#4	12	5 '- 8.5 "	MAX
402	#4	28	5 '- 8.5 "	
501	#5	6	30 '- 0 "	
502	#5	22	5 '- 0 "	
503A	#5	58	3 '- 11.5 "	
503B	#5	16	5 '- 8.5 "	MAX
504	#5	45	5 '- 9.5 "	
505	#5	10	24 '- 0 "	
701	#7	24	20 '- 10 "	
702	#7	20	13 '- 0 "	
1001	#10	10	36 '- 0 "	

- / - BENDING SCHEDULE
SCALE: N.T.S.

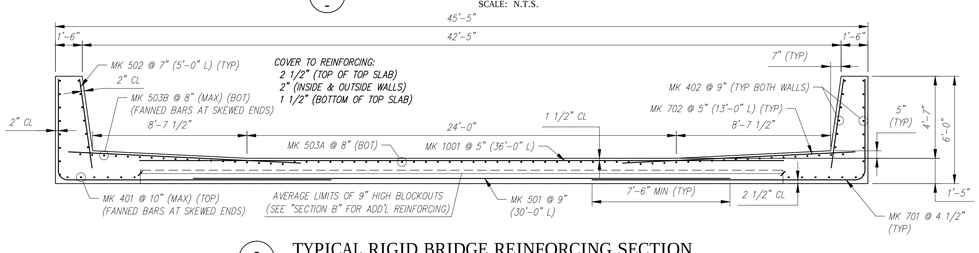

- / C2 TYPICAL RIGID BRIDGE REINFORCING SECTION
SCALE: 1/4" = 1'-0"

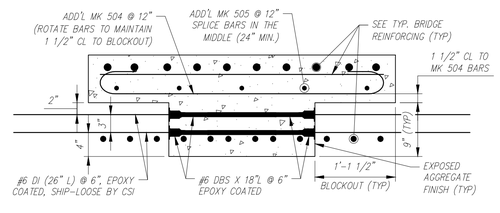

B / C2 SECTION
SCALE: 1" = 1'-0"

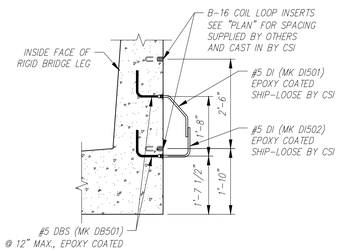

C / C2 SECTION
SCALE: 1/2" = 1'-0"

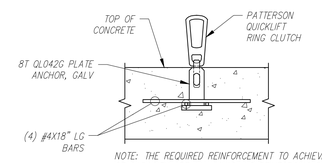

NOTE: THE REQUIRED REINFORCEMENT TO ACHIEVE 8T CAPACITY ARE (4) #4X18" LG REINFORCING BARS. TWO BARS ARE PLACED DIRECTLY ON THE BOTTOM PLATE AND THE OTHER TWO CRISSCROSS DIRECTLY ON TOP OF THE FIRST BARS. THESE MUST BE SECURED IN PLACE AND MAINTAIN CONTACT WITH THE PLATE.

- / C2 PLATE ANCHOR DETAIL
SCALE: 1/2" = 1'-0"

PIECE QUANTITY: 6 EACH
WEIGHT: 22.02 TONS

Contractor is to verify that all information shown on drawings has been thoroughly checked, complies with the contract documents and is adequate to meet the field conditions. Some dimensions and details may differ slightly from contract drawings to accommodate the manufacturing or design process. Approval of this drawing indicates that any deviation from the contract documents has been reviewed and found to be acceptable. Production will not commence until receipt of signed, approved shop drawings.

This drawing contains information proprietary to CONCRETE SYSTEMS, INC. This drawing is disclosed with the understanding that it will be retained in confidence and its use limited solely to the purpose for which it is disclosed. It is understood that no reproduction of this drawing is authorized without permission from CONCRETE SYSTEMS, INC. and that it will be returned to CONCRETE SYSTEMS, INC. upon request.

Rev.	Date	DESCRIPTION	By
10			
9			
8			
7			
6			
5			
4			
3			
2			
1			

REVISIONS

This drawing is based upon information provided from the following documents and/or sources:
Engineer: STANTEC CONSULTING SERVICES, INC.
Project No:
Drawings: PROJECT PLANS
Specifications:
Other Sources:

Concrete Systems Inc.
9 Commercial St., Hudson, NH,03051
Phone 603-889-4163
Fax 603-889-2417

STATE AGENCY
VTrans Working to Get You There

Drawn By	Date
A KOSTENKO	04/22/2016
Reviewed By	Date
Approved By	Date

VTAOT PROJ. NO.: BRF 0151(21)

MILLER CONSTRUCTION, INC.
ROUTE 106 BRIDGE REPLACEMENT T.H. 61 (KENDALL ROAD)
WOODSTOCK, VT

D — RIGID BRIDGE SHOP DRAWING – C2 — REV 0
Drawing No. R-S22624-C2
Quantity: Project No: SHEET C2 OF

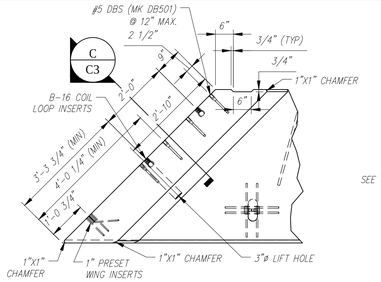

1 / C3 ENLARGED PLAN
SCALE: 1/2" = 1'-0"

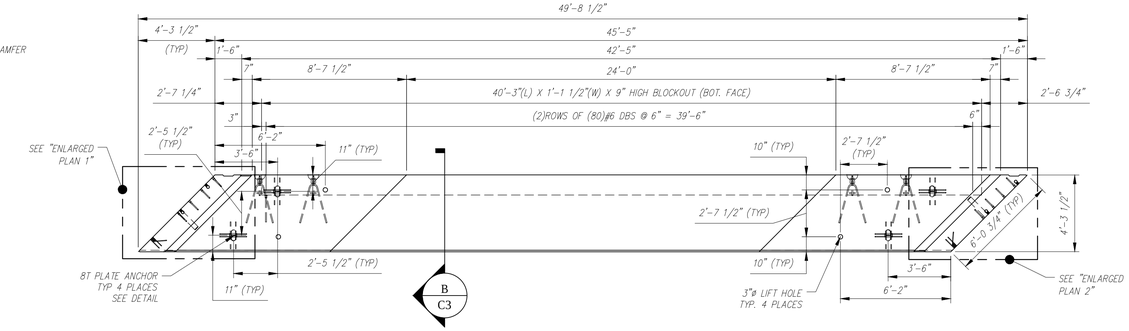

B / C3 PLAN (CASTING POSITION)
SCALE: 1/4" = 1'-0"

NOTE: GUARDRAIL CURB WITH DBS LAYOUT NOT SHOWN FOR CLARITY. FOR DETAILS, SEE GUARDRAIL CURB PLAN AND ELEVATION.

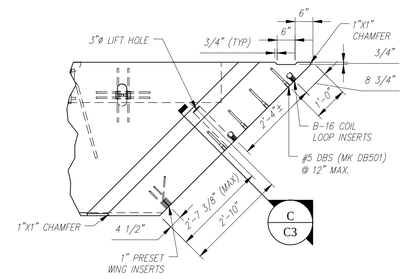

2 / C3 ENLARGED PLAN
SCALE: 1/2" = 1'-0"

NOTES:
1. ALL REINFORCING TO BE STAINLESS (XM-28), EXCEPT ALL MECHANICAL SPLICERS (DBS/DI'S) OR TENSION BARS FOR 8T ERECTION ANCHORS TO BE EPOXY COATED.
2. COVER TO REINFORCING: SEE DETAILS
3. SILANE-SILOXANE TO BE APPLIED IN FIELD BY OTHERS.

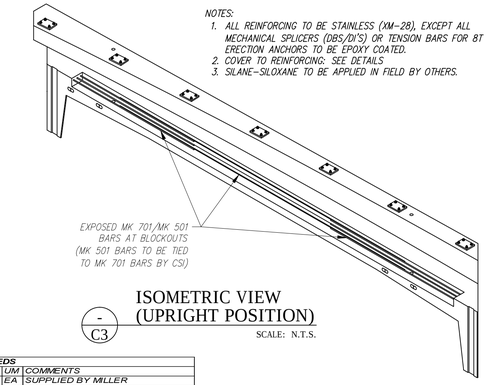

- / C3 ISOMETRIC VIEW (UPRIGHT POSITION)
SCALE: N.T.S.

A / C3 — A / C3

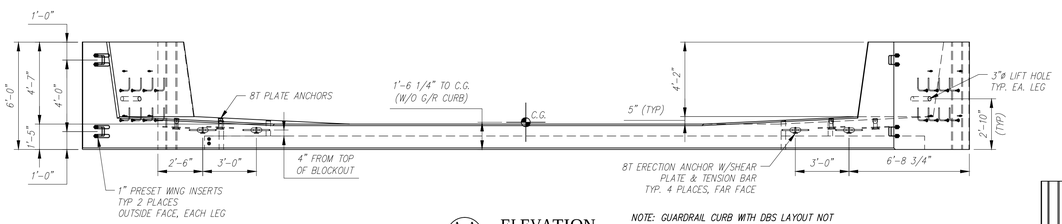

A-A / C3 ELEVATION
SCALE: 1/4" = 1'-0"

NOTE: GUARDRAIL CURB WITH DBS LAYOUT NOT SHOWN FOR CLARITY. FOR DETAILS, SEE GUARDRAIL CURB PLAN AND ELEVATION.

C3 - BILL OF MATERIALS / EMBEDS

CSI ID#	DESCRIPTION	QTY	UM	COMMENTS
SBO	B-16 COIL LOOP INSERTS	8	EA	SUPPLIED BY MILLER
DTJ	DBSAE #6 X 24" EPOXY	106	EA	DOWEL BAR SPLICER
DTJ	8TON ERECTION ANCHOR GALV QL149G	4	EA	W/SHEAR PLATE & TENSION BAR
DTJ	8TON PLATE ANCHOR GALV QL042G	4	EA	W/(4) #4 X 18" BARS
EM-00005	1" X 8" PRESET WING INSERTS	4	EA	
EM-00013	DBSAE #5 X 18" EPOXY	70	EA	DOWEL BAR SPLICER
EM-00015	DBSAE #6 X 18" EPOXY	160	EA	DOWEL BAR SPLICER
EM-00033	3" FOAM CORE PVC	7	FT	
DTJ	REBAR #4 STAINLESS (XM-28)	236	LB	
DTJ	REBAR #5 STAINLESS (XM-28)	1105	LB	
DTJ	REBAR #7 STAINLESS (XM-28)	1553	LB	
DTJ	REBAR #10 STAINLESS (XM-28)	1549	LB	
MX-FA5000SC30	MIX DESIGN - FLY ASH 5000 SELF COMPACTIN	12.13	CY	
C3 GUARDRAIL CURB - BILL OF MATERIALS / EMBEDS				
SBO	GUARDRAIL ANCHORAGE	7	EA	SUPPLIED BY MILLER
DTJ	DI # 6 X 24" EPOXY	106	EA	DOWEL IN
EM-00021	DI #5 X 18" EPOXY	54	EA	
EM-00033	3" FOAM CORE PVC	4	FT	
DTJ	REBAR #5 STAINLESS (XM-28)	637	LB	
MX-FA5000SC30	MIX DESIGN - FLY ASH 5000 SELF COMPACTIN	5.50	CY	
SHIP-LOOSE - BILL OF MATERIALS				
EM-00021	DI #5 X 18" EPOXY	16	EA	
DTJ	DI # 6 X 26" EPOXY	160	EA	DOWEL IN

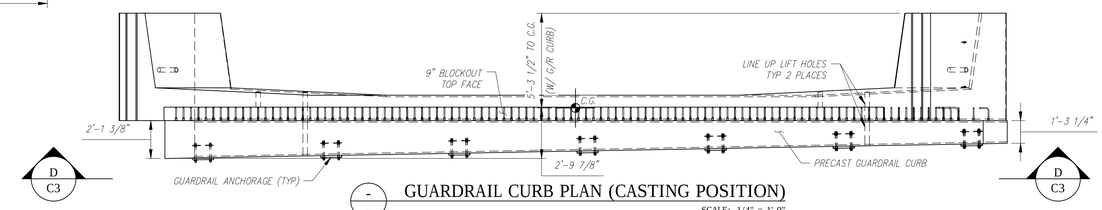

D / C3 — D / C3

- / C3 GUARDRAIL CURB PLAN (CASTING POSITION)
SCALE: 1/4" = 1'-0"

ALL REBAR TO BE STAINLESS

C3 Rebar Schedule					
MK		QTY	LENGTH		
401A	#4	48	2 ': 10 "		
401B	#4	10	5 ': 8.5 "	MAX	
402	#4	28	5 ': 8.5 "		
501	#5	6	30 ': 0 "		
502	#5	22	5 ': 0 "		
503A	#5	58	3 ': 11.5 "		
503B	#5	16	5 ': 8.5 "	MAX	
504	#5	41	3 ': 11 "		
505	#5	12	24 ': 0 "		
701	#7	24	20 ': 10 "		
702	#7	20	13 ': 0 "		
1001	#10	10	36 ': 0 "		

ALL REBAR TO BE STAINLESS

C3 G/R Curb Rebar Schedule				
MK		QTY	LENGTH	
505	#5	14	24 ': 0 "	
506	#5	55	5 ': 0 "	MAX

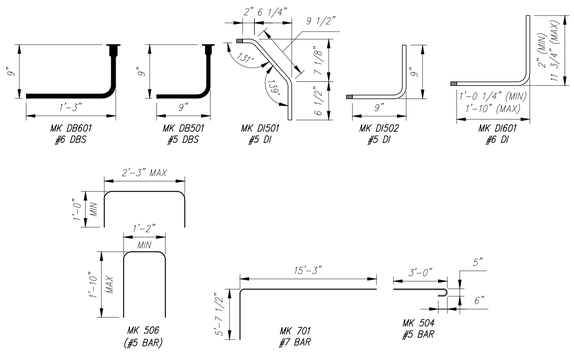

- / C3 BENDING SCHEDULE
SCALE: N.T.S.

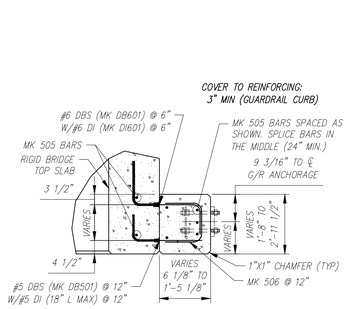

E / C3 GUARDRAIL CURB SECTION
SCALE: 1/2" = 1'-0"

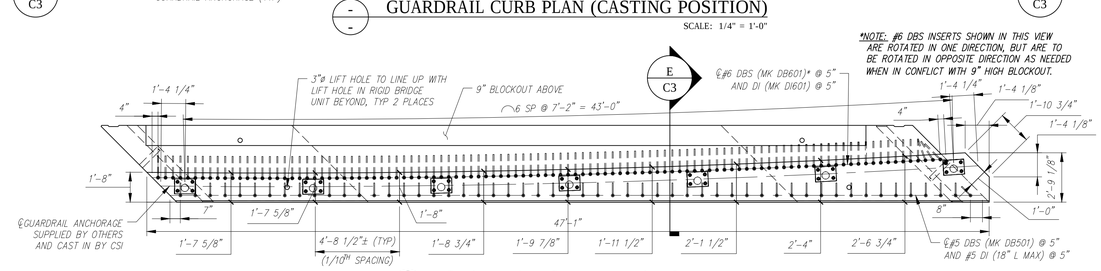

*NOTE: #6 DBS INSERTS SHOWN IN THIS VIEW ARE ROTATED IN ONE DIRECTION, BUT ARE TO BE ROTATED IN OPPOSITE DIRECTION AS NEEDED WHEN IN CONFLICT WITH 9" HIGH BLOCKOUT.

E / C3

D-D / C3 GUARDRAIL CURB ELEVATION
SCALE: 1/4" = 1'-0"

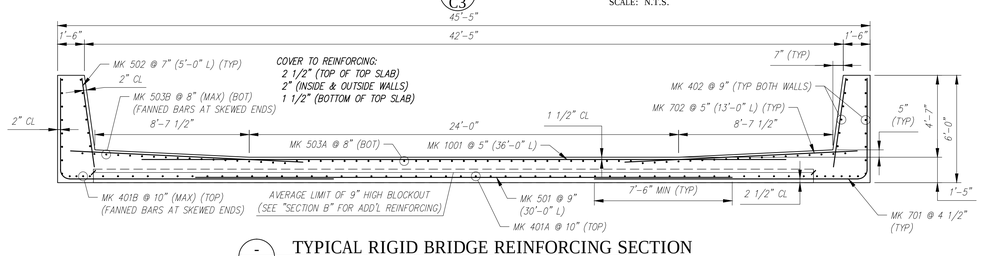

- / C3 TYPICAL RIGID BRIDGE REINFORCING SECTION
SCALE: 1/4" = 1'-0"

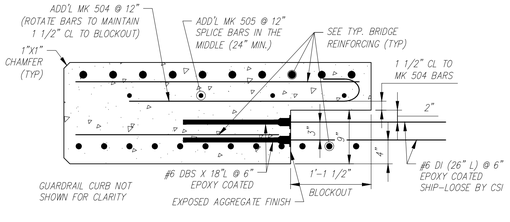

B / C3 SECTION
SCALE: 1" = 1'-0"

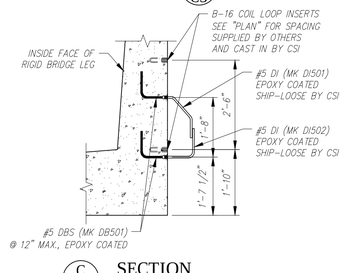

C / C3 SECTION
SCALE: 1/2" = 1'-0"

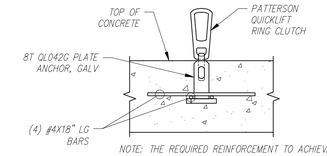

NOTE: THE REQUIRED REINFORCEMENT TO ACHIEVE 8T CAPACITY ARE (4) #4X18" LG REINFORCING BARS. TWO BARS ARE PLACED DIRECTLY ON THE BOTTOM PLATE AND THE OTHER TWO CRISSCROSS DIRECTLY ON TOP OF THE FIRST BARS. THESE MUST BE SECURED IN PLACE AND MAINTAIN CONTACT WITH THE PLATE.

- / C3 PLATE ANCHOR DETAIL
SCALE: 1/2" = 1'-0"

PIECE QUANTITY: 1 EACH
WEIGHT: 35.71 TONS

Contractor is to verify that all information shown on drawings has been thoroughly checked, complies with the contract documents and is adequate to meet the field conditions. Some dimensions and details may differ slightly from contract drawings to accommodate the manufacturing or design process. Approval of this drawing indicates that any deviation from the contract documents has been reviewed and found to be acceptable. Production will not commence until receipt of signed, approved shop drawings.

This drawing contains information proprietary to CONCRETE SYSTEMS, INC. This drawing is disclosed with the understanding that it will be retained in confidence and its use limited solely to the purpose for which it is disclosed. It is understood that no reproduction of this drawing is authorized without permission from CONCRETE SYSTEMS, INC. and that it will be returned to CONCRETE SYSTEMS, INC. upon request.

Rev.	Date	DESCRIPTION	By
10			
9			
8			
7			
6			
5			
4			
3			
2			
1			

REVISIONS

This drawing is based upon information provided from the following documents and/or sources:
Engineer: STANTEC CONSULTING SERVICES, INC.
Project No:
Drawings: PROJECT PLANS
Specifications:
Other Sources:

Concrete Systems Inc.
9 Commercial St., Hudson, NH,03051
Phone 603-889-4163
Fax 603-889-2417

STATE AGENCY
VTrans Working to Get You There! VERMONT AGENCY OF TRANSPORTATION

Drawn By	A KOSTENKO	Date 04/22/2016
Reviewed By		Date
Approved By		Date

VTAOT PROJ. NO.: BRF 0151(21)

MILLER CONSTRUCTION, INC.
ROUTE 106 BRIDGE REPLACEMENT T.H. 61 (KENDALL ROAD)
WOODSTOCK, VT

D — Drawing No. RIGID BRIDGE SHOP DRAWING – C3 — REV 0
R-S22624-C3
Quantity: Project No: SHEET C3 OF

NOTES:
1. ALL REINFORCING TO BE EPOXY COATED.
2. ALL EXPOSED EDGES TO BE 1" CHAMFERED.
3. COVER TO REINFORCING: 2" U.N.O.
4. WATER REPELLANT COATING TO BE APPLIED ON FRONT, TOP AND 1.5' DOWN BACK FACE.

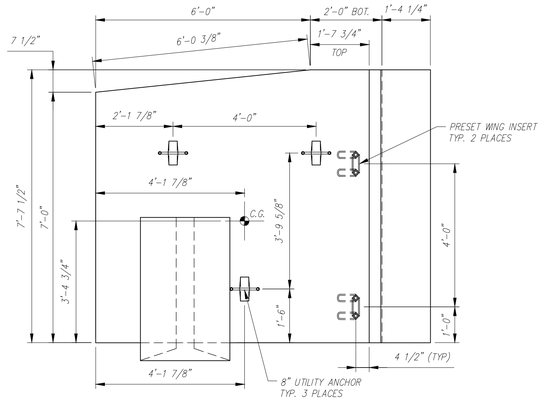

- / - PLAN (CASTING POSITION)
SCALE: 1/2" = 1'-0"

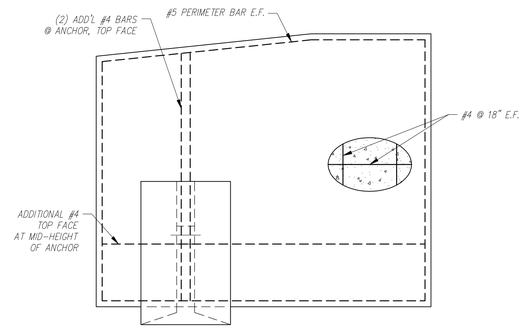

- / - REINFORCING PLAN
SCALE: 1/2" = 1'-0"

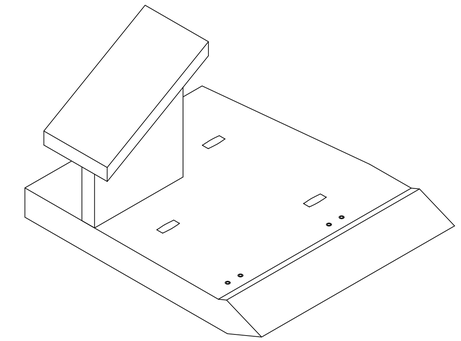

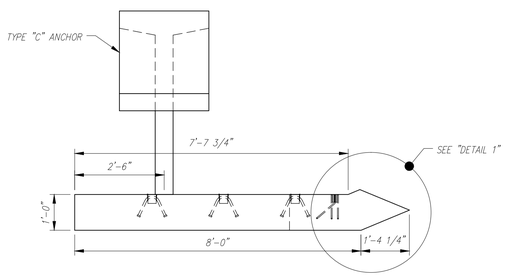

- / - ELEVATION
SCALE: 1/2" = 1'-0"

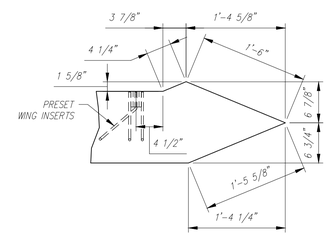

1 / - DETAIL
SCALE: 1" = 1'-0"

WW1 - BILL OF MATERIALS / EMBEDS

CSI ID#	DESCRIPTION	QTY	UM	COMMENTS
SBO	BRIDGE PLAQUE	1	EA	
DTJ	CERTI-VEX PENSEAL 244 WATER REPELLANT	0.5	GA	
CSANC-C	CON/SPAN WINGWALL ANCHOR "C"	1	EA	
EM-00005	1" X 8" PRESET WING INSERTS	2	EA	
EM-00115	UTILITY ANCHOR #8UA671-GALVANIZED	3	EA	
RM-00014	REBAR #4 EPOXY- GR 60 40'	134	LB	
RM-00016	REBAR #5 EPOXY- GR 60 40'	67	LB	
MX-FA5000SC30	MIX DESIGN - FLY ASH 5000 SELF COMPACTIN	2.41	CY	

PIECE QUANTITY: 1 EACH
WEIGHT: 5.78 TONS

Contractor is to verify that all information shown on drawings has been thoroughly checked, complies with the contract documents and is adequate to meet the field conditions. Some dimensions and details may differ slightly from contract drawings to accommodate the manufacturing or design process. Approval of this drawing indicates that any deviation from the contract documents has been reviewed and found to be acceptable. Production will not commence until receipt of signed, approved shop drawings.

This drawing contains information proprietary to CONCRETE SYSTEMS, INC. This drawing is disclosed with the understanding that it will be retained in confidence and its use limited solely to the purpose for which it is disclosed. It is understood that no reproduction of this drawing is authorized without permission from CONCRETE SYSTEMS, INC. and that it will be returned to CONCRETE SYSTEMS, INC. upon request.

Rev.	Date	DESCRIPTION	By
10			
9			
8			
7			
6			
5			
4			
3			
2			
1			

REVISIONS

This drawing is based upon information provided from the following documents and/or sources:
Engineer: STANTEC CONSULTING SERVICES, INC.
Project No:
Drawings: PROJECT PLANS
Specifications:
Other Sources:

Concrete Systems Inc.
9 Commercial St., Hudson, NH,03051
Phone 603-889-4163
Fax 603-889-2417

STATE AGENCY
VTrans Working to Get You There

Drawn By A KOSTENKO	Date 04/04/2016
Reviewed By	Date
Approved By	Date

VTAOT PROJ. NO.: BRF 0151(21)

MILLER CONSTRUCTION, INC.
ROUTE 106 BRIDGE REPLACEMENT T.H. 61 (KENDALL ROAD)
WOODSTOCK, VT

D — Drawing No. SHOP DRAWING – WW1 — REV 0
R-S22624-WW1

Quantity: 1 | Project No: | SHEET WW1 OF

NOTES:
1. ALL REINFORCING TO BE EPOXY COATED.
2. ALL EXPOSED EDGES TO BE 1" CHAMFERED.
3. COVER TO REINFORCING: 2" U.N.O.
4. WATER REPELLANT COATING TO BE APPLIED ON FRONT, TOP AND 1.5' DOWN BACK FACE.

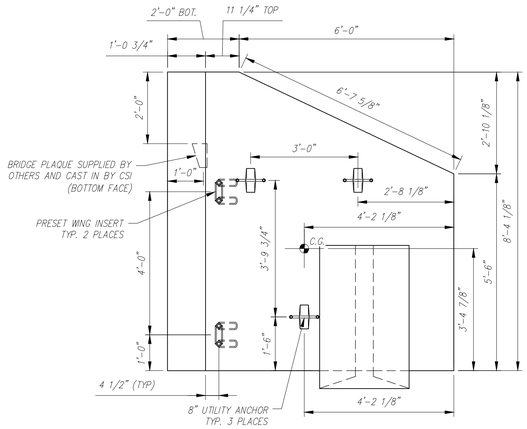

PLAN (CASTING POSITION)
SCALE: 1/2" = 1'-0"

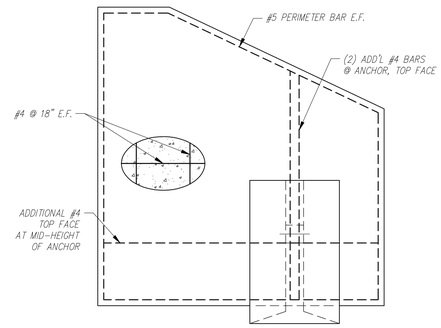

REINFORCING PLAN
SCALE: 1/2" = 1'-0"

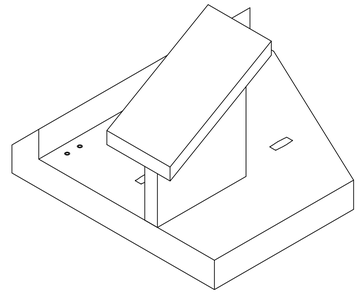

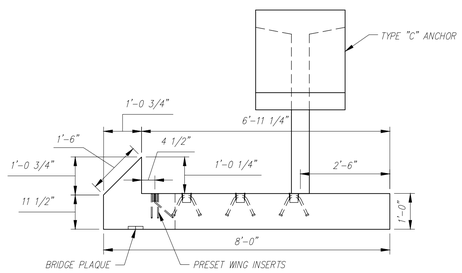

ELEVATION
SCALE: 1/2" = 1'-0"

WW2 - BILL OF MATERIALS / EMBEDS				
CSI ID#	DESCRIPTION	QTY	UM	COMMENTS
DTJ	CERTI-VEX PENSEAL 244 WATER REPELLANT	0.5	GA	
CSANC-C	CON/SPAN WINGWALL ANCHOR "C"	1	EA	
EM-00005	1" X 8" PRESET WING INSERTS	2	EA	
EM-00115	UTILITY ANCHOR #8UA671-GALVANIZED	3	EA	
RM-00014	REBAR #4 EPOXY- GR 60 40'	134	LB	
RM-00016	REBAR #5 EPOXY- GR 60 40'	67	LB	
MX-FA5000SC30	MIX DESIGN - FLY ASH 5000 SELF COMPACTIN	2.32	CY	

PIECE QUANTITY: 1 EACH
WEIGHT: 5.59 TONS

Contractor is to verify that all information shown on drawings has been thoroughly checked, complies with the contract documents and is adequate to meet the field conditions. Some dimensions and details may differ slightly from contract drawings to accommodate the manufacturing or design process. Approval of this drawing indicates that any deviation from the contract documents has been reviewed and found to be acceptable. Production will not commence until receipt of signed, approved shop drawings.

This drawing contains information proprietary to CONCRETE SYSTEMS, INC. This drawing is disclosed with the understanding that it will be retained in confidence and its use limited solely to the purpose for which it is disclosed. It is understood that no reproduction of this drawing is authorized without permission from CONCRETE SYSTEMS, INC. and that it will be returned to CONCRETE SYSTEMS, INC. upon request.

Rev.	Date	DESCRIPTION	By
10			
9			
8			
7			
6			
5			
4			
3			
2			
1			

REVISIONS

This drawing is based upon information provided from the following documents and/or sources:
Engineer: STANTEC CONSULTING SERVICES, INC.
Project No:
Drawings: PROJECT PLANS
Specifications:
Other Sources:

Concrete Systems Inc.
9 Commercial St., Hudson, NH,03051
Phone 603-889-4163
Fax 603-889-2417

STATE AGENCY
VTrans Working to Get You There

Drawn By A KOSTENKO	Date 04/04/2016
Reviewed By	Date
Approved By	Date

VTAOT PROJ. NO.: BRF 0151(21)

MILLER CONSTRUCTION, INC.
ROUTE 106 BRIDGE REPLACEMENT T.H. 61 (KENDALL ROAD)
WOODSTOCK, VT

D | Drawing No. SHOP DRAWING – WW2 R-S22624-WW2 | REV 0

Quantity: 1 | Project No: | SHEET WW2 OF

NOTES:
1. ALL REINFORCING TO BE EPOXY COATED.
2. ALL EXPOSED EDGES TO BE 1" CHAMFERED.
3. COVER TO REINFORCING: 2" U.N.O.
4. WATER REPELLANT COATING TO BE APPLIED ON FRONT, TOP AND 1.5' DOWN BACK FACE.

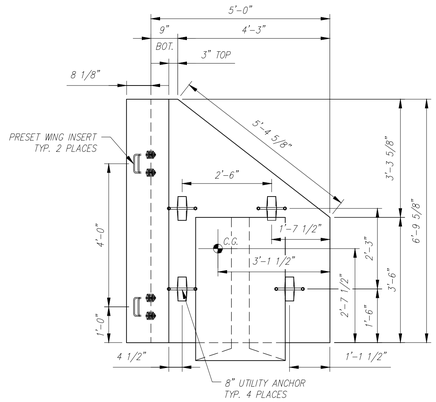

PLAN (CASTING POSITION)
SCALE: 1/2" = 1'-0"

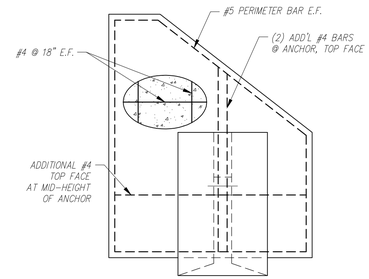

REINFORCING PLAN
SCALE: 1/2" = 1'-0"

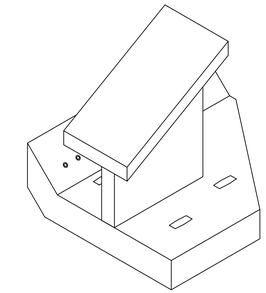

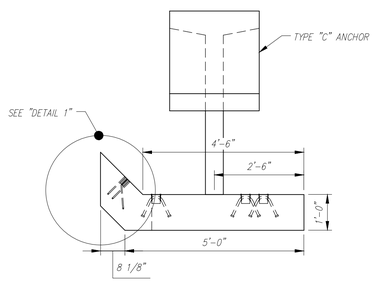

ELEVATION
SCALE: 1/2" = 1'-0"

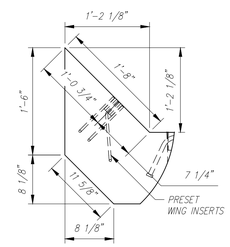

1 DETAIL
SCALE: 1" = 1'-0"

WW3 - BILL OF MATERIALS / EMBEDS

CSI ID#	DESCRIPTION	QTY	UM	COMMENTS
DTJ	CERTI-VEX PENSEAL 244 WATER REPELLANT	0.25	GA	
CSANC-C	CON/SPAN WINGWALL ANCHOR "C"	1	EA	
EM-00005	1" X 8" PRESET WING INSERTS	2	EA	
EM-00115	UTILITY ANCHOR #8UA671-GALVANIZED	4	EA	
RM-00014	REBAR #4 EPOXY- GR 60 40'	73	LB	
RM-00016	REBAR #5 EPOXY- GR 60 40'	46	LB	
MX-FA5000SC30	MIX DESIGN - FLY ASH 5000 SELF COMPACTIN	1.29	CY	

PIECE QUANTITY: 1 EACH
WEIGHT: 3.51 TONS

Contractor is to verify that all information shown on drawings has been thoroughly checked, complies with the contract documents and is adequate to meet the field conditions. Some dimensions and details may differ slightly from contract drawings to accommodate the manufacturing or design process. Approval of this drawing indicates that any deviation from the contract documents has been reviewed and found to be acceptable. Production will not commence until receipt of signed, approved shop drawings.

This drawing contains information proprietary to CONCRETE SYSTEMS, INC. This drawing is disclosed with the understanding that it will be retained in confidence and its use limited solely to the purpose for which it is disclosed. It is understood that no reproduction of this drawing is authorized without permission from CONCRETE SYSTEMS, INC. and that it will be returned to CONCRETE SYSTEMS, INC. upon request.

Rev.	Date	DESCRIPTION	By
10			
9			
8			
7			
6			
5			
4			
3			
2			
1	04/22/2016	CORRECTED TO "WW3" IN TITLE BLOCK.	AK

REVISIONS

This drawing is based upon information provided from the following documents and/or sources:
Engineer: STANTEC CONSULTING SERVICES, INC.
Project No:
Drawings: PROJECT PLANS
Specifications:
Other Sources:

Concrete Systems Inc.
9 Commercial St., Hudson, NH,03051
Phone 603-889-4163
Fax 603-889-2417

STATE AGENCY
VTrans Working to Get You There

Drawn By: A KOSTENKO Date: 04/04/2016
Reviewed By: Date:
Approved By: Date:

VTAOT PROJ. NO.: BRF 0151(21)

MILLER CONSTRUCTION, INC.
ROUTE 106 BRIDGE REPLACEMENT T.H. 61 (KENDALL ROAD)
WOODSTOCK, VT

D
Drawing No. SHOP DRAWING – WW3 △
R-S22624-WW3 △
REV 1
Quantity: 1
Project No:
SHEET WW3 OF

NOTES:
1. ALL REINFORCING TO BE EPOXY COATED.
2. ALL EXPOSED EDGES TO BE 1" CHAMFERED.
3. COVER TO REINFORCING: 2" U.N.O.
4. WATER REPELLANT COATING TO BE APPLIED ON FRONT, TOP AND 1.5' DOWN BACK FACE.

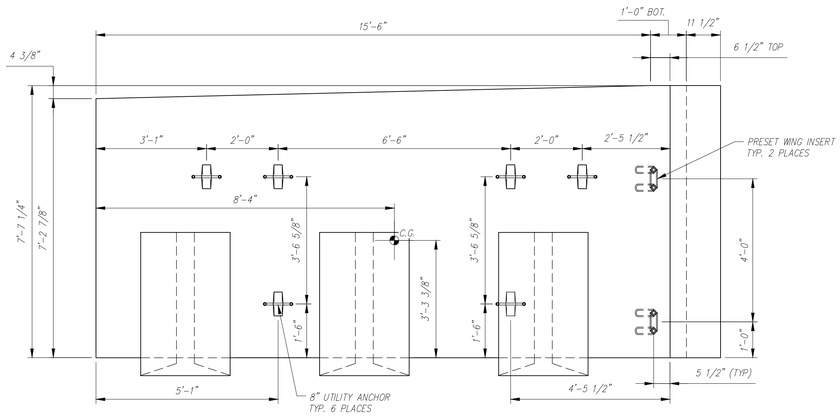

- / - PLAN (CASTING POSITION)
SCALE: 1/2" = 1'-0"

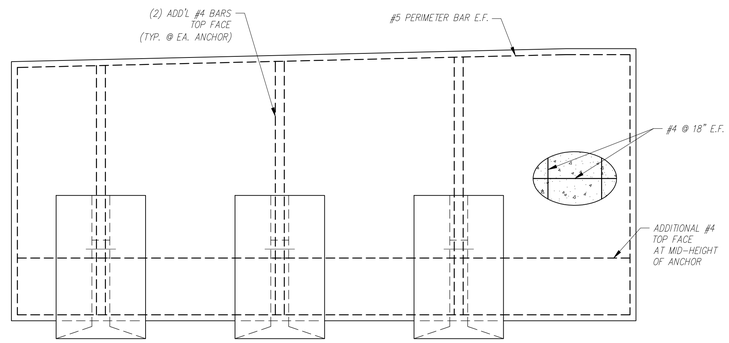

- / - REINFORCING PLAN
SCALE: 1/2" = 1'-0"

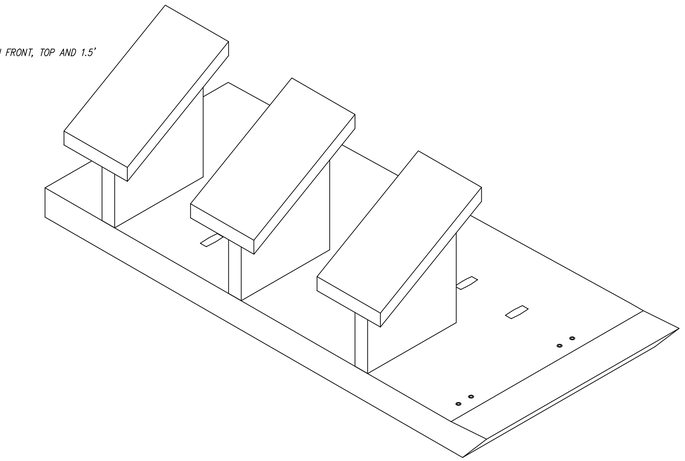

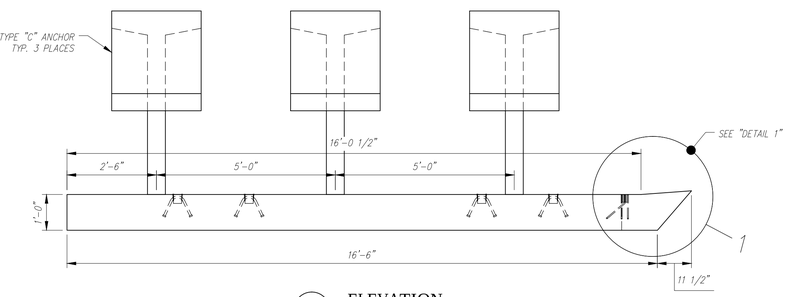

- / - ELEVATION
SCALE: 1/2" = 1'-0"

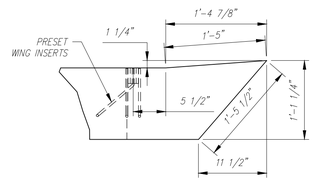

1 / - DETAIL
SCALE: 1" = 1'-0"

WW4 - BILL OF MATERIALS / EMBEDS				
CSI ID#	DESCRIPTION	QTY	UM	COMMENTS
DTJ	CERTI-VEX PENSEAL 244 WATER REPELLANT	1	GA	
CSANC-C	CON/SPAN WINGWALL ANCHOR "C"	3	EA	
EM-00005	1" X 8" PRESET WING INSERTS	2	EA	
EM-00115	UTILITY ANCHOR #8UA671-GALVANIZED	6	EA	
RM-00014	REBAR #4 EPOXY- GR 60 40'	266	LB	
RM-00016	REBAR #5 EPOXY- GR 60 40'	101	LB	
MX-FA5000SC30	MIX DESIGN - FLY ASH 5000 SELF COMPACTIN	4.68	CY	

PIECE QUANTITY: 1 EACH
WEIGHT: 12.18 TONS

Contractor is to verify that all information shown on drawings has been thoroughly checked, complies with the contract documents and is adequate to meet the field conditions. Some dimensions and details may differ slightly from contract drawings to accommodate the manufacturing or design process. Approval of this drawing indicates that any deviation from the contract documents has been reviewed and found to be acceptable. Production will not commence until receipt of signed, approved shop drawings.

This drawing contains information proprietary to CONCRETE SYSTEMS, INC. This drawing is disclosed with the understanding that it will be retained in confidence and its use limited solely to the purpose for which it is disclosed. It is understood that no reproduction of this drawing is authorized without permission from CONCRETE SYSTEMS, INC. and that it will be returned to CONCRETE SYSTEMS, INC. upon request.

Rev.	Date	DESCRIPTION	By
10			
9			
8			
7			
6			
5			
4			
3			
2			
1			

REVISIONS

This drawing is based upon information provided from the following documents and/or sources:
Engineer: STANTEC CONSULTING SERVICES, INC.
Project No:
Drawings: PROJECT PLANS
Specifications:
Other Sources:

Concrete Systems Inc.
9 Commercial St., Hudson, NH,03051
Phone 603-889-4163
Fax 603-889-2417

STATE AGENCY
VTrans Working to Get You There

Drawn By A KOSTENKO	Date 04/04/2016
Reviewed By	Date
Approved By	Date

VTAOT PROJ. NO.: BRF 0151(21)

MILLER CONSTRUCTION, INC.
ROUTE 106 BRIDGE REPLACEMENT T.H. 61 (KENDALL ROAD)
WOODSTOCK, VT

D — SHOP DRAWING – WW4
Drawing No. R-S22624-WW4
REV 0
Quantity: 1 | Project No: | SHEET WW4 OF

NOTES:
1. ALL REINFORCING TO BE LEVEL I, BLACK (UNCOATED).
2. COVER TO REINFORCING: SEE DETAILS

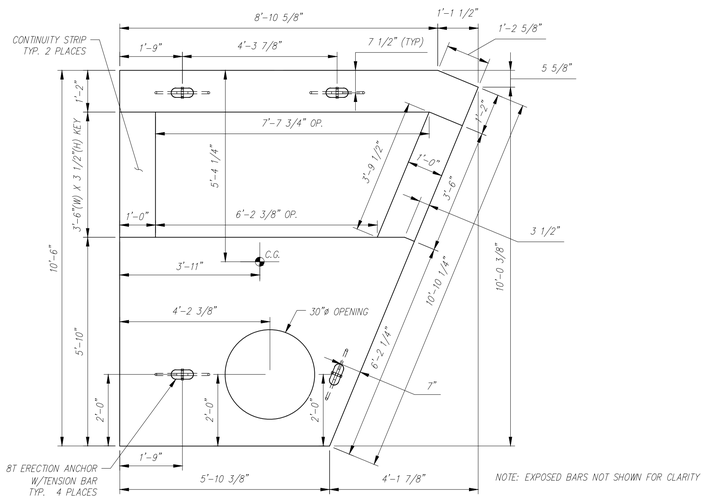

PLAN VIEW
SCALE: 1/2" = 1'-0"

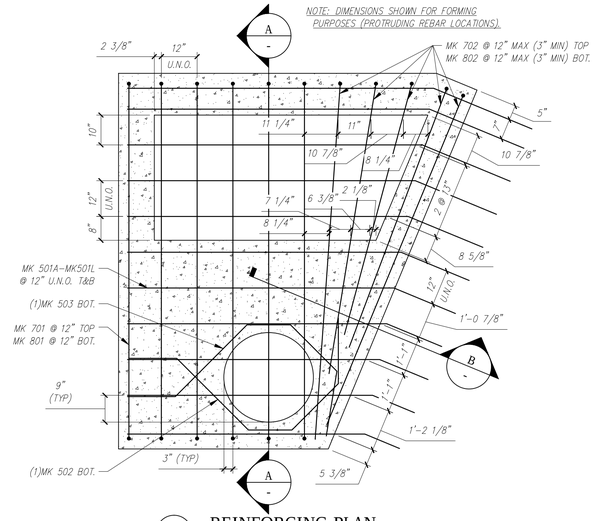

REINFORCING PLAN
SCALE: 1/2" = 1'-0"

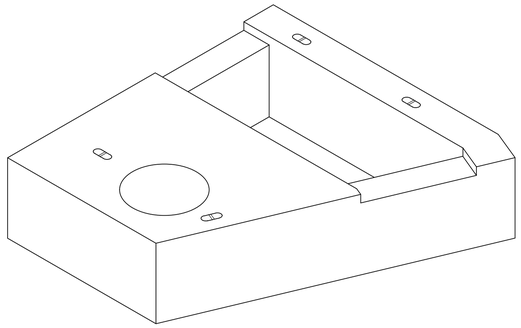

NOTE: EXPOSED BARS NOT SHOWN FOR CLARITY

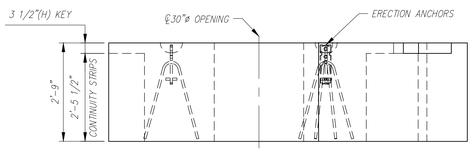

NOTE: EXPOSED BARS NOT SHOWN FOR CLARITY

FRONT ELEVATION
SCALE: 1/2" = 1'-0"

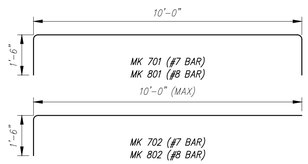

F1 - BILL OF MATERIALS / EMBEDS				
CSI ID#	DESCRIPTION	QTY	UM	COMMENTS
EM-00122	8TON ERECTION ANCHOR GALV QL049G	4	EA	W/TENSION BAR
RM-00015	REBAR #5 BLACK-GR 60 40'	242	LB	
RM-00009	REBAR #7 BLACK-GR 60	277	LB	
RM-00104	REBAR #8 BLACK GR 60	362	LB	
MX-PA5000SC30	MIX DESIGN - FLY ASH 5000 SELF COMPACTIN	5.52	CY	

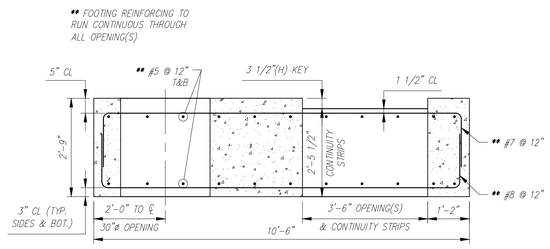

TYP. REINFORCING SECTION
SCALE: 1/2" = 1'-0"

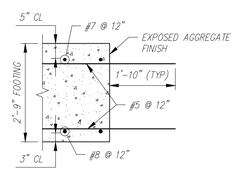

REINFORCING SECTION
SCALE: 1/2" = 1'-0"

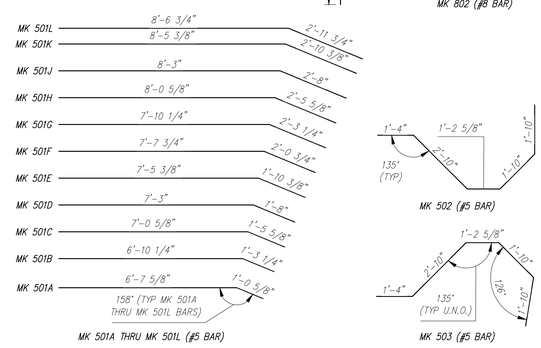

BENDING SCHEDULE
SCALE: 3/8" = 1'-0"

F1 Rebar Schedule				
MK		QTY	LENGTH	
501A	#5	2	7 '- 8.5 "	
501B	#5	2	8 '- 1.5 "	
501C	#5	2	8 '- 6.5 "	
501D	#5	2	8 '- 11 "	
501E	#5	2	9 '- 4 "	
501F	#5	2	9 '- 8.5 "	
501G	#5	2	10 '- 1.5 "	
501H	#5	2	10 '- 6.5 "	
501J	#5	2	10 '- 11 "	
501K	#5	2	11 '- 4 "	
501L	#5	2	11 '- 6.5 "	
502	#5	1	9 '- 0.5 "	
503	#5	1	9 '- 0.5 "	
701	#7	6	13 '- 0 "	
702	#7	5	11 '- 6 "	MAX
801	#8	6	13 '- 0 "	
802	#8	5	11 '- 6 "	MAX

PIECE QUANTITY: 1 EACH
WEIGHT: 11.18 TONS

Contractor is to verify that all information shown on drawings has been thoroughly checked, complies with the contract documents and is adequate to meet the field conditions. Some dimensions and details may differ slightly from contract drawings to accommodate the manufacturing or design process. Approval of this drawing indicates that any deviation from the contract documents has been reviewed and found to be acceptable. Production will not commence until receipt of signed, approved shop drawings.

This drawing contains information proprietary to CONCRETE SYSTEMS, INC. This drawing is disclosed with the understanding that it will be retained in confidence and its use limited solely to the purpose for which it is disclosed. It is understood that no reproduction of this drawing is authorized without permission from CONCRETE SYSTEMS, INC. and that it will be returned to CONCRETE SYSTEMS, INC. upon request.

Rev.	Date	DESCRIPTION	By
10			
9			
8			
7			
6			
5			
4			
3			
2			
1	04/15/2016	ADDED NOTES/DIMENSIONS TO "REINFORCING PLAN"	AK

REVISIONS

This drawing is based upon information provided from the following documents and/or sources:
Engineer: STANTEC CONSULTING SERVICES, INC.
Project No:
Drawings: PROJECT PLANS
Specifications:
Other Sources:

Concrete Systems Inc.
9 Commercial St., Hudson, NH,03051
Phone 603-889-4163
Fax 603-889-2417

STATE AGENCY
VTrans Working to Get You There

Drawn By: A KOSTENKO — Date: 04/04/2016
Reviewed By — Date
Approved By — Date

VTAOT PROJ. NO.: BRF 0151(21)

MILLER CONSTRUCTION, INC.
ROUTE 106 BRIDGE REPLACEMENT T.H. 61 (KENDALL ROAD)
WOODSTOCK, VT

D — Drawing No. SHOP DRAWING – F1 — REV 1
R-S22624-F1

Quantity: 1 — Project No: — SHEET F1 OF

NOTES:
1. ALL REINFORCING TO BE LEVEL I, BLACK (UNCOATED).
2. COVER TO REINFORCING: SEE DETAILS

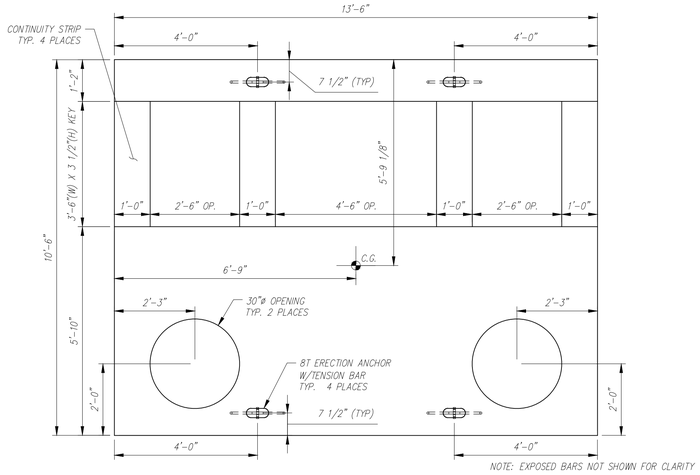

PLAN VIEW
SCALE: 1/2" = 1'-0"

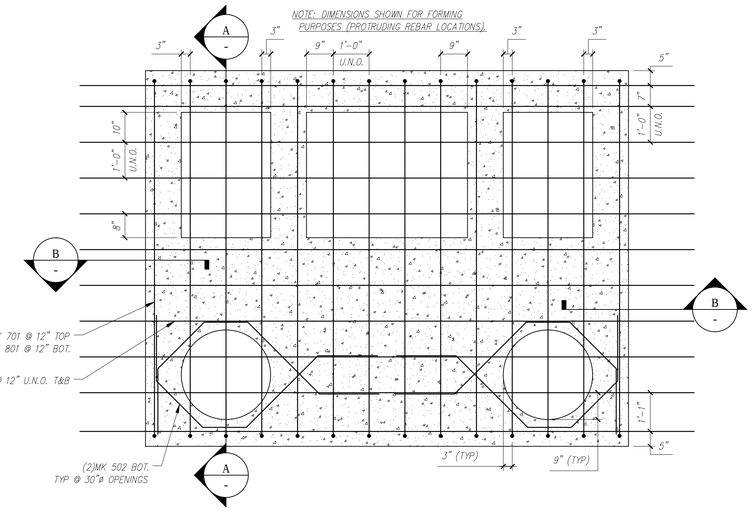

REINFORCING PLAN
SCALE: 1/2" = 1'-0"

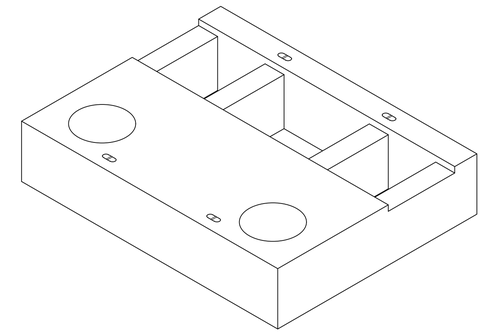

NOTE: EXPOSED BARS NOT SHOWN FOR CLARITY

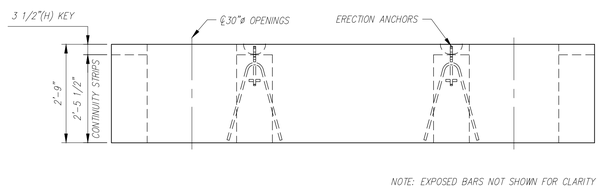

NOTE: EXPOSED BARS NOT SHOWN FOR CLARITY

FRONT ELEVATION
SCALE: 1/2" = 1'-0"

F2 - BILL OF MATERIALS / EMBEDS				
CSI ID#	DESCRIPTION	QTY	UM	COMMENTS
EM-00122	8TON ERECTION ANCHOR GALV QL049G	4	EA	W/TENSION BAR
RM-00015	REBAR #5 BLACK-GR 60 40'	433	LB	
RM-00009	REBAR #7 BLACK-GR 60	372	LB	
RM-00104	REBAR #8 BLACK GR 60	486	LB	
MX-FA5000SC30	MIX DESIGN - FLY ASH 5000 SELF COMPACTIN	9.90	CY	

** FOOTING REINFORCING TO RUN CONTINUOUS THROUGH ALL OPENING(S)

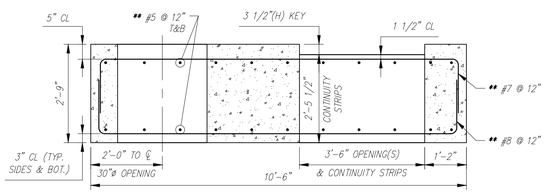

TYP. REINFORCING SECTION
SCALE: 1/2" = 1'-0"

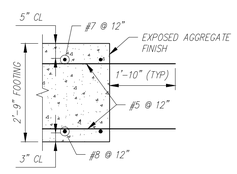

TYP. REINFORCING SECTION
SCALE: 1/2" = 1'-0"

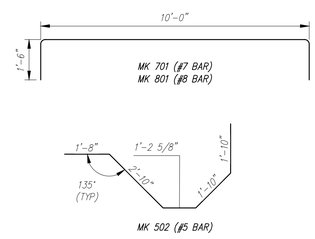

BENDING SCHEDULE
SCALE: 3/8" = 1'-0"

F2 Rebar Schedule			
MK		QTY	LENGTH
501	#5	22	17 '- 2 "
502	#5	4	9 '- 4.5 "
701	#7	14	13 '- 0 "
801	#8	14	13 '- 0 "

PIECE QUANTITY: 1 EACH
WEIGHT: 20.05 TONS

Contractor is to verify that all information shown on drawings has been thoroughly checked, complies with the contract documents and is adequate to meet the field conditions. Some dimensions and details may differ slightly from contract drawings to accommodate the manufacturing or design process. Approval of this drawing indicates that any deviation from the contract documents has been reviewed and found to be acceptable. Production will not commence until receipt of signed, approved shop drawings.

This drawing contains information proprietary to CONCRETE SYSTEMS, INC. This drawing is disclosed with the understanding that it will be retained in confidence and its use limited solely to the purpose for which it is disclosed. It is understood that no reproduction of this drawing is authorized without permission from CONCRETE SYSTEMS, INC. and that it will be returned to CONCRETE SYSTEMS, INC. upon request.

Rev.	Date	DESCRIPTION	By
10			
9			
8			
7			
6			
5			
4			
3			
2			
1	04/15/2016	ADDED NOTES/DIMENSIONS TO "REINFORCING PLAN"	AK

REVISIONS

This drawing is based upon information provided from the following documents and/or sources:
Engineer: STANTEC CONSULTING SERVICES, INC.
Project No:
Drawings: PROJECT PLANS
Specifications:
Other Sources:

CSI Concrete Systems Inc.
9 Commercial St., Hudson, NH,03051
Phone 603-889-4163
Fax 603-889-2417

STATE AGENCY
VTrans Working to Get You There

Drawn By: A KOSTENKO — Date: 04/04/2016
Reviewed By — Date
Approved By — Date

VTAOT PROJ. NO.: BRF 0151(21)

MILLER CONSTRUCTION, INC.
ROUTE 106 BRIDGE REPLACEMENT T.H. 61 (KENDALL ROAD)
WOODSTOCK, VT

D — Drawing No. SHOP DRAWING – F2 — REV 1
R-S22624-F2

Quantity: 1 — Project No: — SHEET F2 OF

NOTES:
1. ALL REINFORCING TO BE LEVEL I, BLACK (UNCOATED).
2. COVER TO REINFORCING: SEE DETAILS

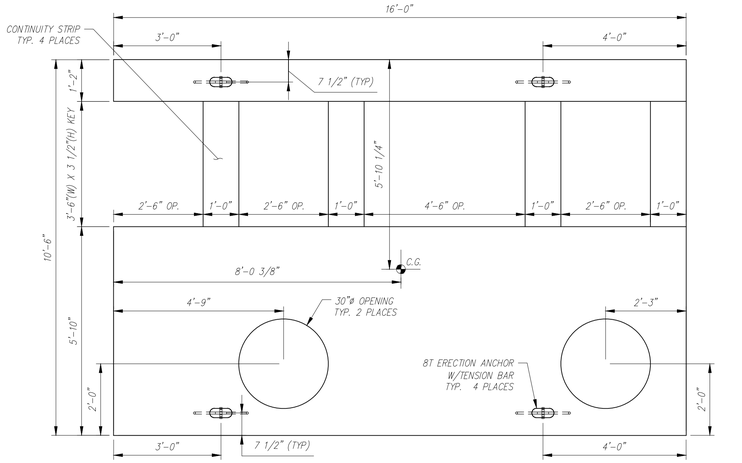

PLAN VIEW
SCALE: 1/2" = 1'-0"

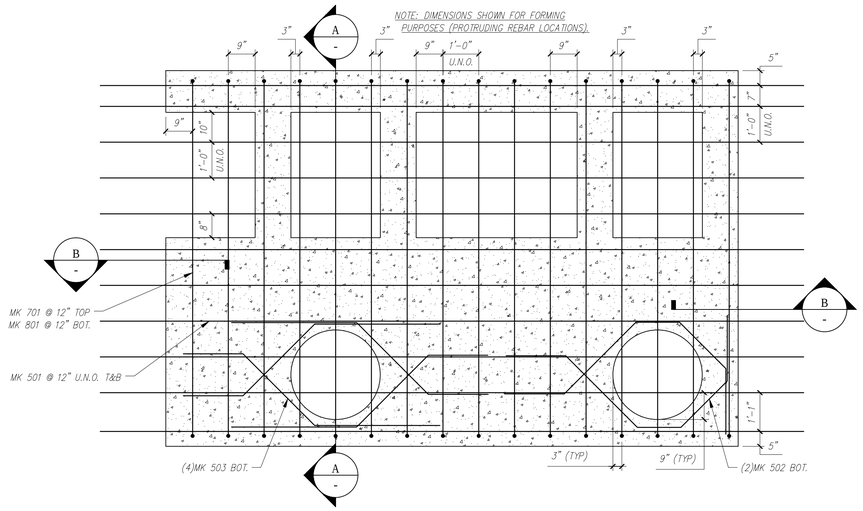

REINFORCING PLAN
SCALE: 1/2" = 1'-0"

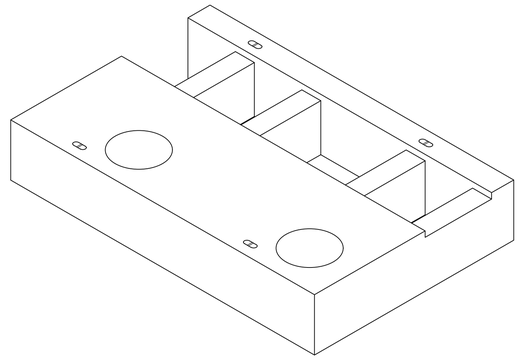

NOTE: EXPOSED BARS NOT SHOWN FOR CLARITY

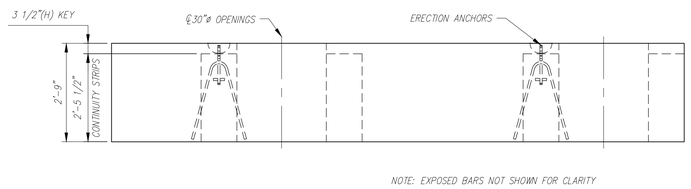

FRONT ELEVATION
SCALE: 1/2" = 1'-0"

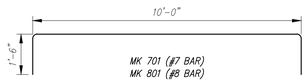

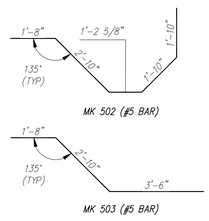

F3 - BILL OF MATERIALS / EMBEDS				
CSI ID#	DESCRIPTION	QTY	UM	COMMENTS
EM-00122	8TON ERECTION ANCHOR GALV QL049G	4	EA	W/TENSION BAR
RM-00015	REBAR #5 BLACK-GR 60 40'	504	LB	
RM-00009	REBAR #7 BLACK-GR 60	425	LB	
RM-00104	REBAR #8 BLACK GR 60	555	LB	
MX-FA5000SC30	MIX DESIGN - FLY ASH 5000 SELF COMPACTIN	11.68	CY	

F3 Rebar Schedule			
MK		QTY	LENGTH
501	#5	22	19 '- 8 "
502	#5	2	9 '- 4.5 "
503	#5	4	8 '- 0 "
701	#7	16	13 '- 0 "
801	#8	16	13 '- 0 "

** FOOTING REINFORCING TO RUN CONTINUOUS THROUGH ALL OPENING(S)

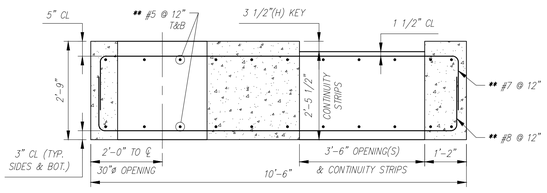

TYP. REINFORCING SECTION
SCALE: 1/2" = 1'-0"

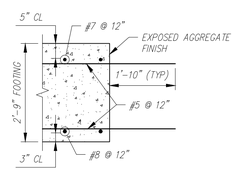

TYP. REINFORCING SECTION
SCALE: 1/2" = 1'-0"

BENDING SCHEDULE
SCALE: 3/8" = 1'-0"

PIECE QUANTITY: 1 EACH
WEIGHT: 23.66 TONS

Contractor is to verify that all information shown on drawings has been thoroughly checked, complies with the contract documents and is adequate to meet the field conditions. Some dimensions and details may differ slightly from contract drawings to accommodate the manufacturing or design process. Approval of this drawing indicates that any deviation from the contract documents has been reviewed and found to be acceptable. Production will not commence until receipt of signed, approved shop drawings.

This drawing contains information proprietary to CONCRETE SYSTEMS, INC. This drawing is disclosed with the understanding that it will be retained in confidence and its use limited solely to the purpose for which it is disclosed. It is understood that no reproduction of this drawing is authorized without permission from CONCRETE SYSTEMS, INC. and that it will be returned to CONCRETE SYSTEMS, INC. upon request.

Rev.	Date	DESCRIPTION	By
10			
9			
8			
7			
6			
5			
4			
3			
2			
1	04/15/2016	ADDED NOTES/DIMENSIONS TO "REINFORCING PLAN"	AK

REVISIONS

This drawing is based upon information provided from the following documents and/or sources:
Engineer: STANTEC CONSULTING SERVICES, INC.
Project No:
Drawings: PROJECT PLANS
Specifications:
Other Sources:

Concrete Systems Inc.
9 Commercial St., Hudson, NH,03051
Phone 603-889-4163
Fax 603-889-2417

STATE AGENCY
VTrans Working to Get You There

Drawn By	Date
A KOSTENKO	04/04/2016
Reviewed By	Date
Approved By	Date

VTAOT PROJ. NO.: BRF 0151(21)

MILLER CONSTRUCTION, INC.
ROUTE 106 BRIDGE REPLACEMENT T.H. 61 (KENDALL ROAD)
WOODSTOCK, VT

D
Drawing No. SHOP DRAWING – F3
R-S22624-F3
REV 1

Quantity: 1 | Project No: | SHEET F3 OF

NOTES:
1. ALL REINFORCING TO BE LEVEL I, BLACK (UNCOATED).
2. COVER TO REINFORCING: SEE DETAILS

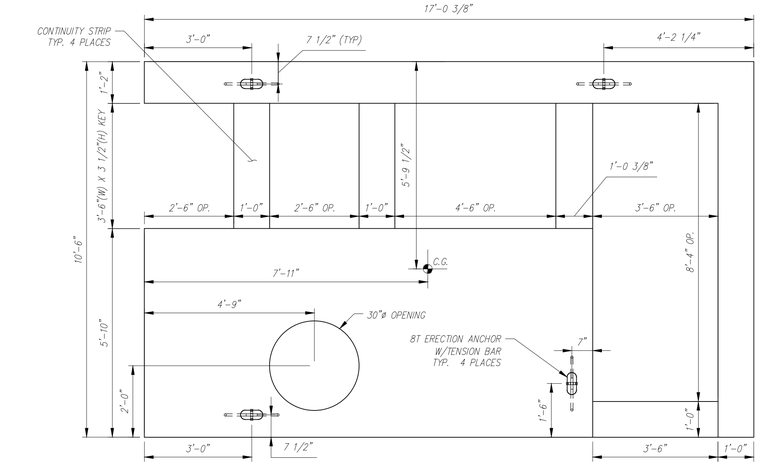

NOTE: EXPOSED BARS NOT SHOWN FOR CLARITY

PLAN VIEW
SCALE: 1/2" = 1'-0"

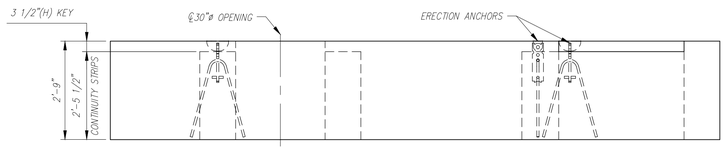

NOTE: EXPOSED BARS NOT SHOWN FOR CLARITY

FRONT ELEVATION
SCALE: 1/2" = 1'-0"

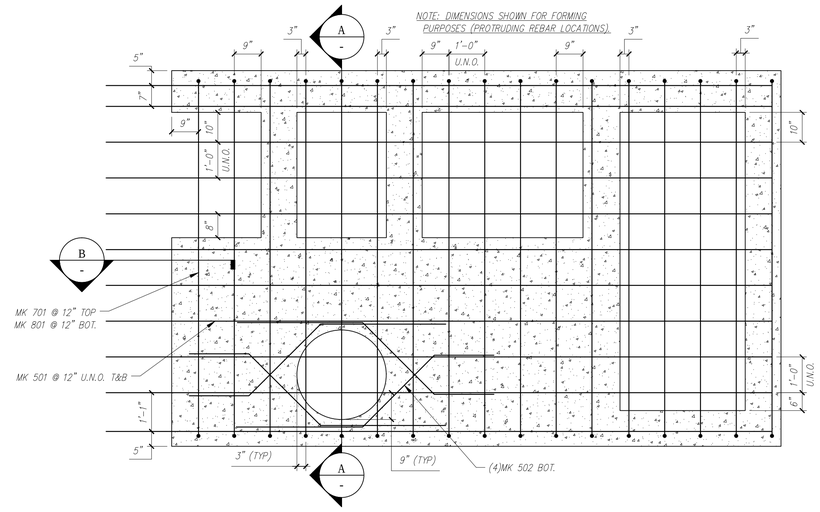

REINFORCING PLAN
SCALE: 1/2" = 1'-0"

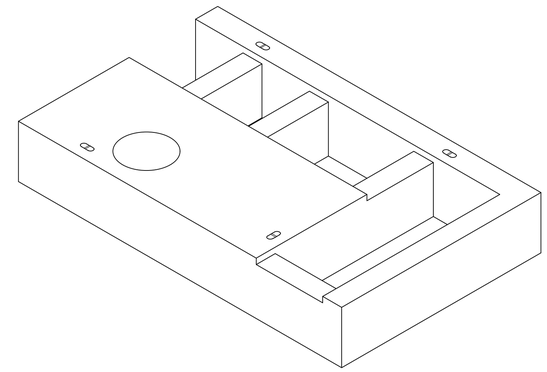

NOTE: EXPOSED BARS NOT SHOWN FOR CLARITY

** FOOTING REINFORCING TO RUN CONTINUOUS THROUGH ALL OPENING(S)

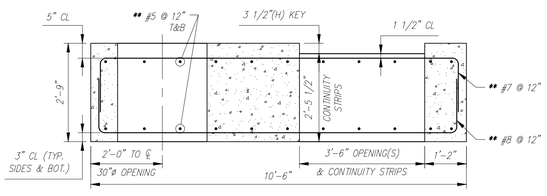

TYP. REINFORCING SECTION
SCALE: 1/2" = 1'-0"

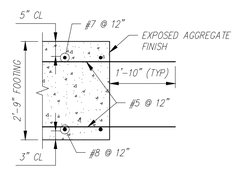

TYP. REINFORCING SECTION
SCALE: 1/2" = 1'-0"

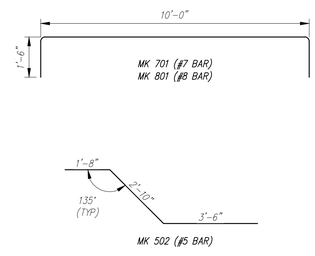

BENDING SCHEDULE
SCALE: 3/8" = 1'-0"

F4 - BILL OF MATERIALS / EMBEDS				
CSI ID#	DESCRIPTION	QTY	UM	COMMENTS
EM-00122	8TON ERECTION ANCHOR GALV QL049G	4	EA	W/TENSION BAR
RM-00015	REBAR #5 BLACK-GR 60 40'	461	LB	
RM-00009	REBAR #7 BLACK-GR 60	452	LB	
RM-00104	REBAR #8 BLACK GR 60	590	LB	
MX-FA5000SC30	MIX DESIGN - FLY ASH 5000 SELF COMPACTIN	11.20	CY	

F4 Rebar Schedule			
MK		QTY	LENGTH
501	#5	22	18 '- 7.5 "
502	#5	4	8 '- 0 "
701	#7	17	13 '- 0 "
801	#8	17	13 '- 0 "

PIECE QUANTITY: 1 EACH
WEIGHT: 22.69 TONS

Contractor is to verify that all information shown on drawings has been thoroughly checked, complies with the contract documents and is adequate to meet the field conditions. Some dimensions and details may differ slightly from contract drawings to accommodate the manufacturing or design process. Approval of this drawing indicates that any deviation from the contract documents has been reviewed and found to be acceptable. Production will not commence until receipt of signed, approved shop drawings.

This drawing contains information proprietary to CONCRETE SYSTEMS, INC. This drawing is disclosed with the understanding that it will be retained in confidence and its use limited solely to the purpose for which it is disclosed. It is understood that no reproduction of this drawing is authorized without permission from CONCRETE SYSTEMS, INC. and that it will be returned to CONCRETE SYSTEMS, INC. upon request.

Rev.	Date	DESCRIPTION	By
10			
9			
8			
7			
6			
5			
4			
3			
2			
1	04/15/2016	ADDED NOTES/DIMENSIONS TO "REINFORCING PLAN"	AK

REVISIONS

This drawing is based upon information provided from the following documents and/or sources:
Engineer: STANTEC CONSULTING SERVICES, INC.
Project No:
Drawings: PROJECT PLANS
Specifications:
Other Sources:

Concrete Systems Inc.
9 Commercial St., Hudson, NH,03051
Phone 603-889-4163
Fax 603-889-2417

STATE AGENCY
VTrans Working to Get You There

Drawn By: A KOSTENKO — Date: 04/04/2016
Reviewed By — Date
Approved By — Date

VTAOT PROJ. NO.: BRF 0151(21)

MILLER CONSTRUCTION, INC.
ROUTE 106 BRIDGE REPLACEMENT T.H. 61 (KENDALL ROAD)
WOODSTOCK, VT

D — SHOP DRAWING – F4 — REV 1
Drawing No. R-S22624-F4
Quantity: 1 — Project No: — SHEET F4 OF

NOTES:
1. ALL REINFORCING TO BE LEVEL I, BLACK (UNCOATED).
2. COVER TO REINFORCING: SEE DETAILS

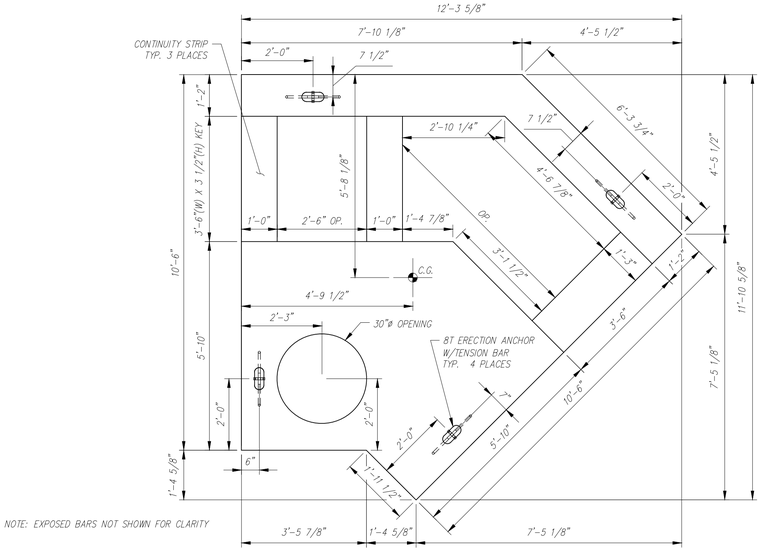

NOTE: EXPOSED BARS NOT SHOWN FOR CLARITY

PLAN VIEW
SCALE: 1/2" = 1'-0"

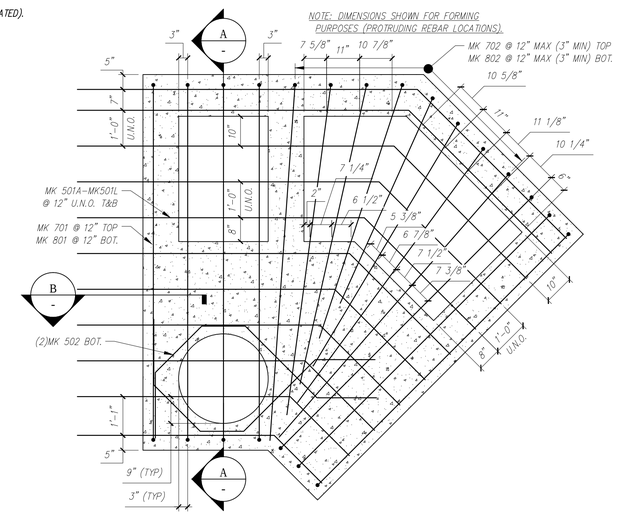

REINFORCING PLAN
SCALE: 1/2" = 1'-0"

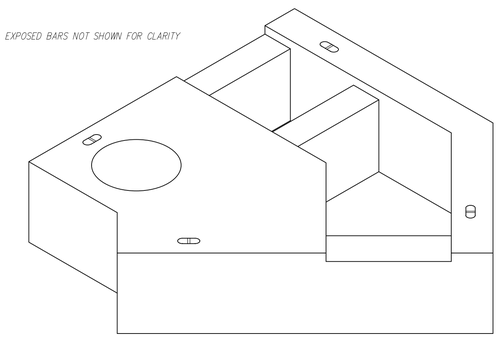

NOTE: EXPOSED BARS NOT SHOWN FOR CLARITY

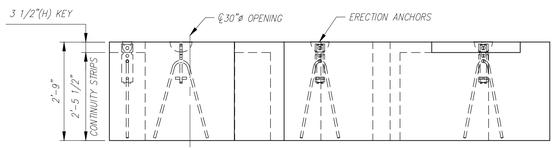

NOTE: EXPOSED BARS NOT SHOWN FOR CLARITY

FRONT ELEVATION
SCALE: 1/2" = 1'-0"

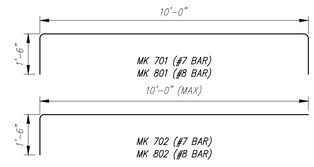

F5 - BILL OF MATERIALS / EMBEDS				
CSI ID#	DESCRIPTION	QTY	UM	COMMENTS
EM-00122	8TON ERECTION ANCHOR GALV QL049G	4	EA	W/TENSION BAR
RM-00015	REBAR #5 BLACK-GR 60 40'	285	LB	
RM-00009	REBAR #7 BLACK-GR 60	374	LB	
RM-00104	REBAR #8 BLACK GR 60	489	LB	
MX-FA5000SC30	MIX DESIGN - FLY ASH 5000 SELF COMPACTIN	6.84	CY	

** FOOTING REINFORCING TO RUN CONTINUOUS THROUGH ALL OPENING(S)

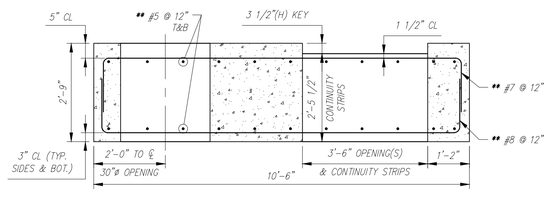

TYP. REINFORCING SECTION
SCALE: 1/2" = 1'-0"

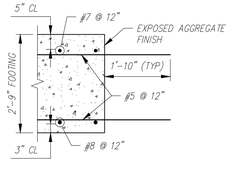

TYP. REINFORCING SECTION
SCALE: 1/2" = 1'-0"

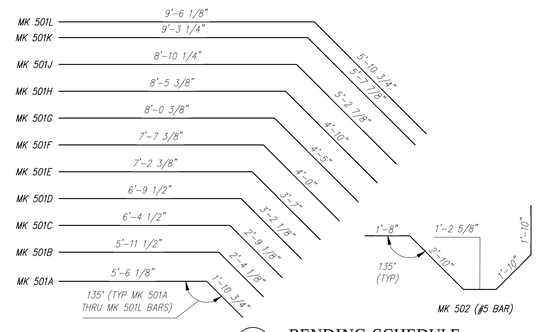

BENDING SCHEDULE
SCALE: 3/8" = 1'-0"

F5 Rebar Schedule				
MK		QTY	LENGTH	
501A	#5	2	7 '- 5 "	
501B	#5	2	8 '- 3.5 "	
501C	#5	2	9 '- 1.5 "	
501D	#5	2	9 '- 11.5 "	
501E	#5	2	10 '- 9.5 "	
501F	#5	2	11 '- 7.5 "	
501G	#5	2	12 '- 5.5 "	
501H	#5	2	13 '- 3 "	
501J	#5	2	14 '- 1 "	
501K	#5	2	14 '- 11 "	
501L	#5	2	15 '- 5 "	
502	#5	2	9 '- 4.5 "	
701	#7	7	13 '- 0 "	
702	#7	8	11 '- 6 "	MAX
801	#8	7	13 '- 0 "	
802	#8	8	11 '- 6 "	MAX

PIECE QUANTITY: 1 EACH
WEIGHT: 13.84 TONS

Contractor is to verify that all information shown on drawings has been thoroughly checked, complies with the contract documents and is adequate to meet the field conditions. Some dimensions and details may differ slightly from contract drawings to accommodate the manufacturing or design process. Approval of this drawing indicates that any deviation from the contract documents has been reviewed and found to be acceptable. Production will not commence until receipt of signed, approved shop drawings.

This drawing contains information proprietary to CONCRETE SYSTEMS, INC. This drawing is disclosed with the understanding that it will be retained in confidence and its use limited solely to the purpose for which it is disclosed. It is understood that no reproduction of this drawing is authorized without permission from CONCRETE SYSTEMS, INC. and that it will be returned to CONCRETE SYSTEMS, INC. upon request.

Rev.	Date	DESCRIPTION	By
10			
9			
8			
7			
6			
5			
4			
3			
2			
1	04/15/2016	ADDED NOTES/DIMENSIONS TO "REINFORCING PLAN"	AK

REVISIONS

This drawing is based upon information provided from the following documents and/or sources:
Engineer: STANTEC CONSULTING SERVICES, INC.
Project No:
Drawings: PROJECT PLANS
Specifications:
Other Sources:

Concrete Systems Inc.
9 Commercial St., Hudson, NH,03051
Phone 603-889-4163
Fax 603-889-2417

STATE AGENCY
VTrans Working to Get You There
Drawn By A KOSTENKO Date 04/04/2016
Reviewed By Date
Approved By Date

VTAOT PROJ. NO.: BRF 0151(21)

MILLER CONSTRUCTION, INC.
ROUTE 106 BRIDGE REPLACEMENT T.H. 61 (KENDALL ROAD)
WOODSTOCK, VT

D Drawing No. SHOP DRAWING – F5 R-S22624-F5 REV 1

Quantity: 1 Project No: SHEET F5 OF

NOTES:
1. ALL REINFORCING TO BE LEVEL I, BLACK (UNCOATED).
2. COVER TO REINFORCING: SEE DETAILS

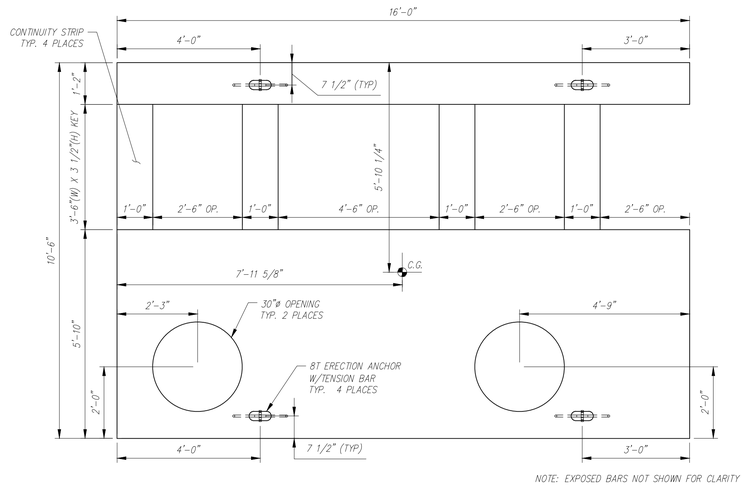

PLAN VIEW
SCALE: 1/2" = 1'-0"

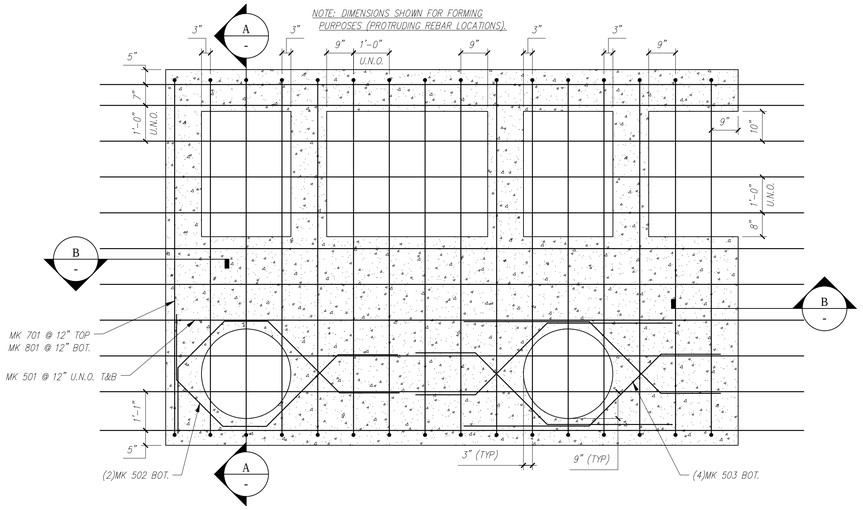

REINFORCING PLAN
SCALE: 1/2" = 1'-0"

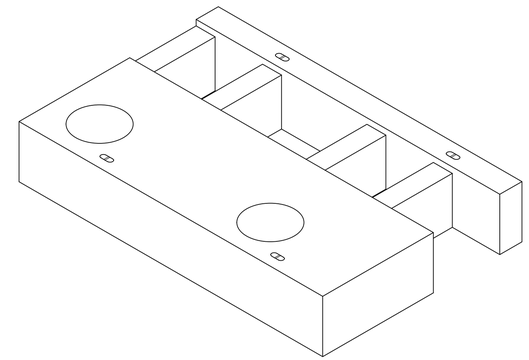

NOTE: EXPOSED BARS NOT SHOWN FOR CLARITY

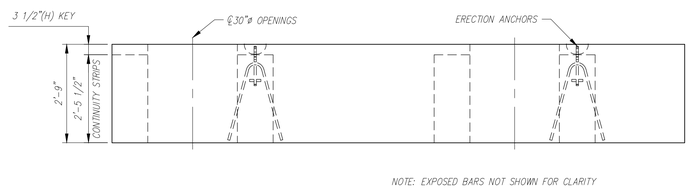

NOTE: EXPOSED BARS NOT SHOWN FOR CLARITY

FRONT ELEVATION
SCALE: 1/2" = 1'-0"

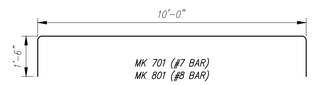

F6 - BILL OF MATERIALS / EMBEDS				
CSI ID#	DESCRIPTION	QTY	UM	COMMENTS
EM-00122	8TON ERECTION ANCHOR GALV QL049G	4	EA	W/TENSION BAR
RM-00015	REBAR #5 BLACK-GR 60 40'	504	LB	
RM-00009	REBAR #7 BLACK-GR 60	425	LB	
RM-00104	REBAR #8 BLACK GR 60	555	LB	
MX-FA5000SC30	MIX DESIGN - FLY ASH 5000 SELF COMPACTIN	11.68	CY	

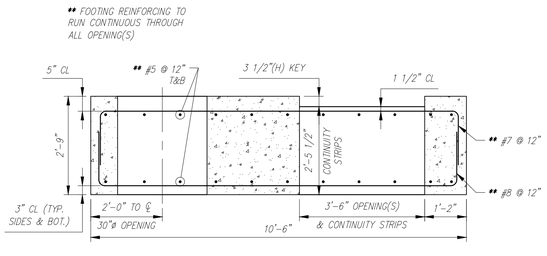

TYP. REINFORCING SECTION
SCALE: 1/2" = 1'-0"

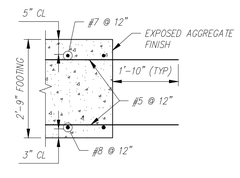

TYP. REINFORCING SECTION
SCALE: 1/2" = 1'-0"

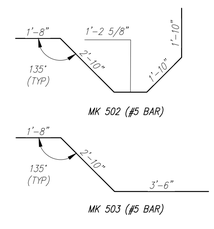

BENDING SCHEDULE
SCALE: 3/8" = 1'-0"

F6 Rebar Schedule			
MK		QTY	LENGTH
501	#5	22	19 '- 8 "
502	#5	2	9 '- 4.5 "
503	#5	4	8 '- 0 "
701	#7	16	13 '- 0 "
801	#8	16	13 '- 0 "

PIECE QUANTITY: 1 EACH
WEIGHT: 23.66 TONS

Contractor is to verify that all information shown on drawings has been thoroughly checked, complies with the contract documents and is adequate to meet the field conditions. Some dimensions and details may differ slightly from contract drawings to accommodate the manufacturing or design process. Approval of this drawing indicates that any deviation from the contract documents has been reviewed and found to be acceptable. Production will not commence until receipt of signed, approved shop drawings.

This drawing contains information proprietary to CONCRETE SYSTEMS, INC. This drawing is disclosed with the understanding that it will be retained in confidence and its use limited solely to the purpose for which it is disclosed. It is understood that no reproduction of this drawing is authorized without permission from CONCRETE SYSTEMS, INC. and that it will be returned to CONCRETE SYSTEMS, INC. upon request.

Rev.	Date	DESCRIPTION	By
10			
9			
8			
7			
6			
5			
4			
3			
2			
1	04/15/2016	ADDED NOTES/DIMENSIONS TO "REINFORCING PLAN"	AK

REVISIONS

This drawing is based upon information provided from the following documents and/or sources:
Engineer: STANTEC CONSULTING SERVICES, INC.
Project No:
Drawings: PROJECT PLANS
Specifications:
Other Sources:

CSI Concrete Systems Inc.
9 Commercial St., Hudson, NH,03051
Phone 603-889-4163
Fax 603-889-2417

STATE AGENCY
VTrans Working to Get You There

Drawn By	Date
A KOSTENKO	04/04/2016
Reviewed By	Date
Approved By	Date

VTAOT PROJ. NO.: BRF 0151(21)

MILLER CONSTRUCTION, INC.
ROUTE 106 BRIDGE REPLACEMENT T.H. 61 (KENDALL ROAD)
WOODSTOCK, VT

D | Drawing No. | SHOP DRAWING – F6 | REV 1
R-S22624-F6

Quantity: 1 | Project No: | SHEET F6 OF

NOTES:
1. ALL REINFORCING TO BE LEVEL I, BLACK (UNCOATED).
2. COVER TO REINFORCING: SEE DETAILS

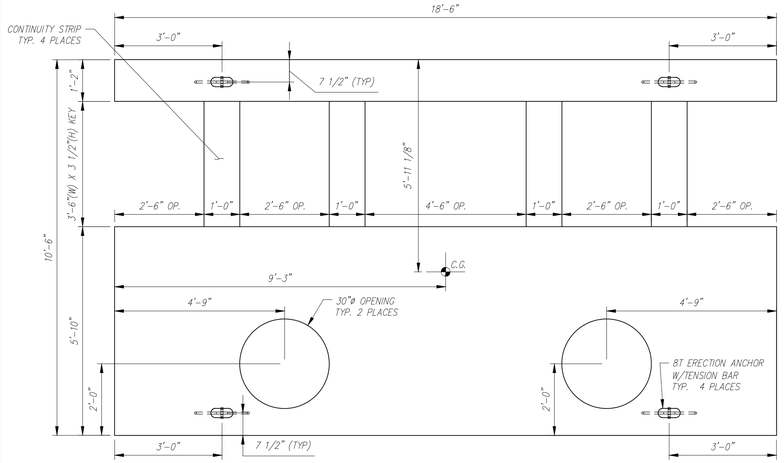

NOTE: EXPOSED BARS NOT SHOWN FOR CLARITY

PLAN VIEW
SCALE: 1/2" = 1'-0"

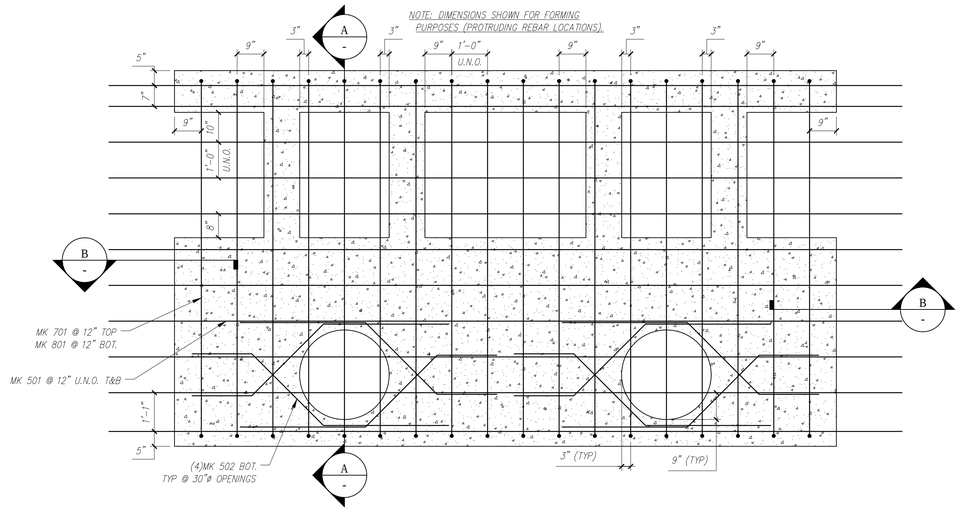

REINFORCING PLAN
SCALE: 1/2" = 1'-0"

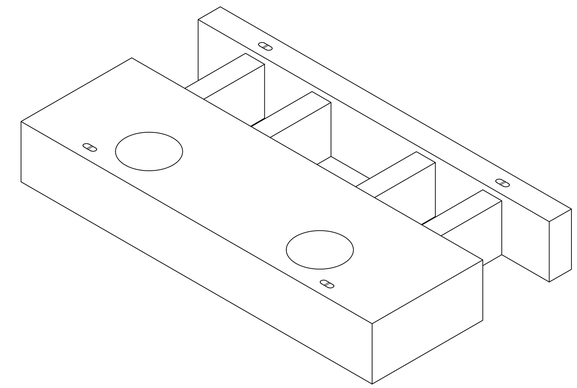

NOTE: EXPOSED BARS NOT SHOWN FOR CLARITY

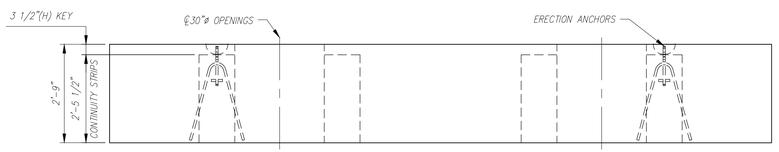

NOTE: EXPOSED BARS NOT SHOWN FOR CLARITY

FRONT ELEVATION
SCALE: 1/2" = 1'-0"

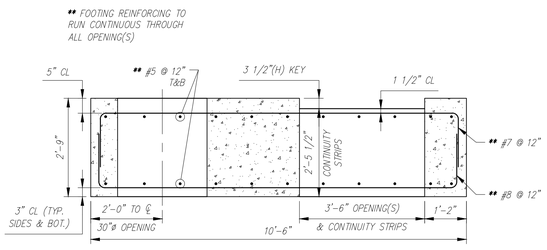

TYP. REINFORCING SECTION
SCALE: 1/2" = 1'-0"

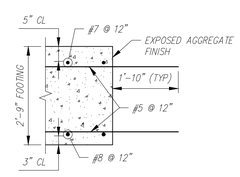

TYP. REINFORCING SECTION
SCALE: 1/2" = 1'-0"

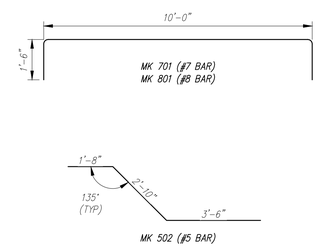

BENDING SCHEDULE
SCALE: 3/8" = 1'-0"

F7 - BILL OF MATERIALS / EMBEDS				
CSI ID#	DESCRIPTION	QTY	UM	COMMENTS
EM-00122	8TON ERECTION ANCHOR GALV QL049G	4	EA	W/TENSION BAR
RM-00015	REBAR #5 BLACK-GR 60 40'	575	LB	
RM-00009	REBAR #7 BLACK-GR 60	478	LB	
RM-00104	REBAR #8 BLACK GR 60	625	LB	
MX-FA5000SC30	MIX DESIGN - FLY ASH 5000 SELF COMPACTIN	13.46	CY	

F7 Rebar Schedule			
MK		QTY	LENGTH
501	#5	22	22 '- 2 "
502	#5	8	8 '- 0 "
701	#7	18	13 '- 0 "
801	#8	18	13 '- 0 "

PIECE QUANTITY: 1 EACH
WEIGHT: 27.27 TONS

Contractor is to verify that all information shown on drawings has been thoroughly checked, complies with the contract documents and is adequate to meet the field conditions. Some dimensions and details may differ slightly from contract drawings to accommodate the manufacturing or design process. Approval of this drawing indicates that any deviation from the contract documents has been reviewed and found to be acceptable. Production will not commence until receipt of signed, approved shop drawings.

This drawing contains information proprietary to CONCRETE SYSTEMS, INC. This drawing is disclosed with the understanding that it will be retained in confidence and its use limited solely to the purpose for which it is disclosed. It is understood that no reproduction of this drawing is authorized without permission from CONCRETE SYSTEMS, INC. and that it will be returned to CONCRETE SYSTEMS, INC. upon request.

Rev.	Date	DESCRIPTION	By
10			
9			
8			
7			
6			
5			
4			
3			
2			
1	04/15/2016	ADDED NOTES/DIMENSIONS TO "REINFORCING PLAN"	AK

REVISIONS

This drawing is based upon information provided from the following documents and/or sources:
Engineer: STANTEC CONSULTING SERVICES, INC.
Project No:
Drawings: PROJECT PLANS
Specifications:
Other Sources:

Concrete Systems Inc.
9 Commercial St., Hudson, NH,03051
Phone 603-889-4163
Fax 603-889-2417

STATE AGENCY
VTrans Working to Get You There

Drawn By A KOSTENKO	Date 04/04/2016
Reviewed By	Date
Approved By	Date

VTAOT PROJ. NO.: BRF 0151(21)

MILLER CONSTRUCTION, INC.
ROUTE 106 BRIDGE REPLACEMENT T.H. 61 (KENDALL ROAD)
WOODSTOCK, VT

D | Drawing No. SHOP DRAWING – F7 R-S22624-F7 | REV 1

Quantity: 1 | Project No: | SHEET F7 OF

NOTES:
1. ALL REINFORCING TO BE LEVEL I, BLACK (UNCOATED).
2. COVER TO REINFORCING: SEE DETAILS

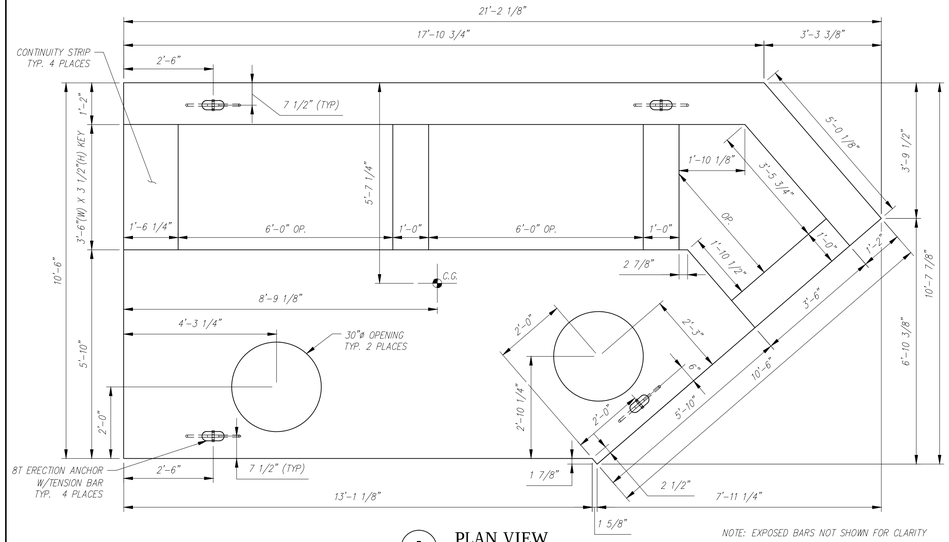

NOTE: EXPOSED BARS NOT SHOWN FOR CLARITY

PLAN VIEW
SCALE: 1/2" = 1'-0"

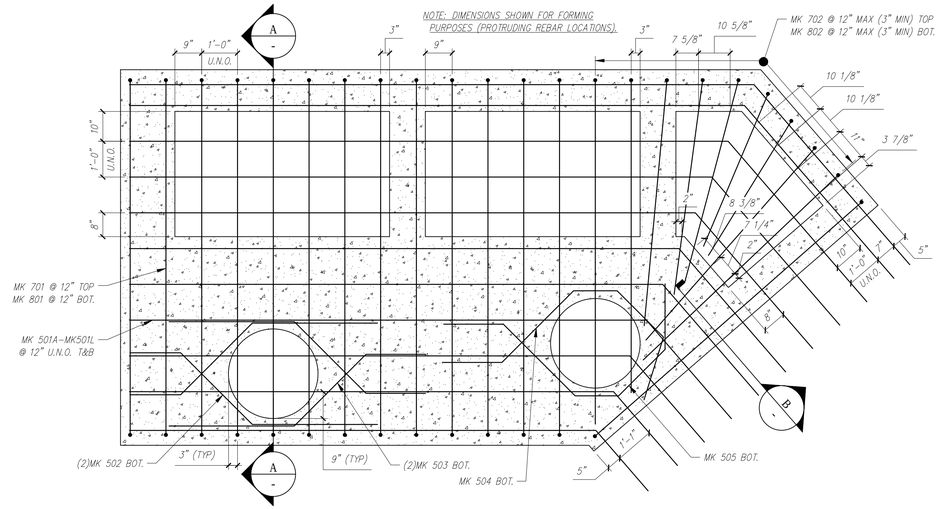

REINFORCING PLAN
SCALE: 1/2" = 1'-0"

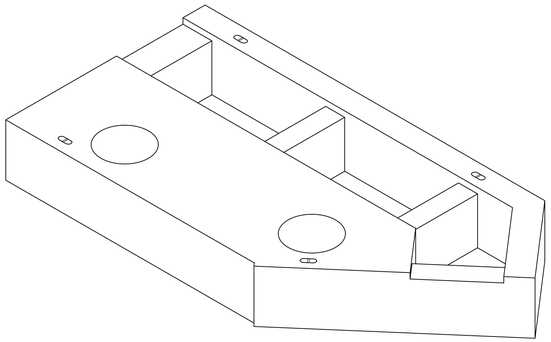

NOTE: EXPOSED BARS NOT SHOWN FOR CLARITY

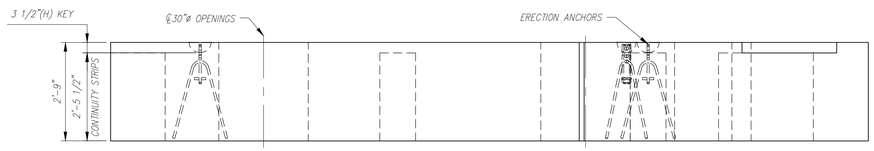

NOTE: EXPOSED BARS NOT SHOWN FOR CLARITY

FRONT ELEVATION
SCALE: 1/2" = 1'-0"

F8 - BILL OF MATERIALS / EMBEDS				
CSI ID#	DESCRIPTION	QTY	UM	COMMENTS
EM-00122	8TON ERECTION ANCHOR GALV QL049G	4	EA	W/TENSION BAR
RM-00015	REBAR #5 BLACK-GR 60 40'	509	LB	
RM-00009	REBAR #7 BLACK-GR 60	584	LB	
RM-00104	REBAR #8 BLACK GR 60	762	LB	
MX-FA5000SC30	MIX DESIGN - FLY ASH 5000 SELF COMPACTIN	12.59	CY	

F8 Rebar Schedule				
MK		QTY	LENGTH	
501A	#5	2	15 '- 3.5 "	
501B	#5	2	16 '- 3.5 "	
501C	#5	2	17 '- 2.5 "	
501D	#5	2	18 '- 1 "	
501E	#5	2	19 '- 0 "	
501F	#5	2	19 '- 11 "	
501G	#5	2	20 '- 10 "	
501H	#5	2	21 '- 9 "	
501J	#5	2	22 '- 8 "	
501K	#5	2	23 '- 7 "	
501L	#5	2	24 '- 1.5 "	
502	#5	2	7 '- 9 "	
503	#5	2	8 '- 0 "	
504	#5	1	9 '- 4.5 "	
505	#5	1	9 '- 4.5 "	
701	#7	14	13 '- 0 "	
702	#7	9	11 '- 6 "	MAX
801	#8	14	13 '- 0 "	
802	#8	9	11 '- 6 "	MAX

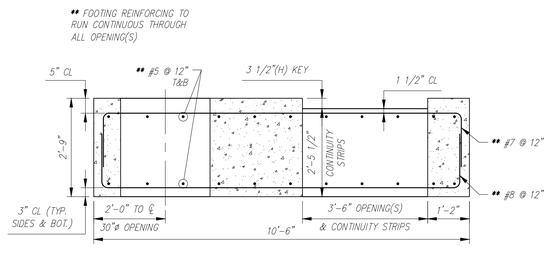

TYP. REINFORCING SECTION
SCALE: 1/2" = 1'-0"

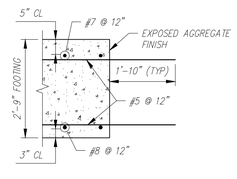

TYP. REINFORCING SECTION
SCALE: 1/2" = 1'-0"

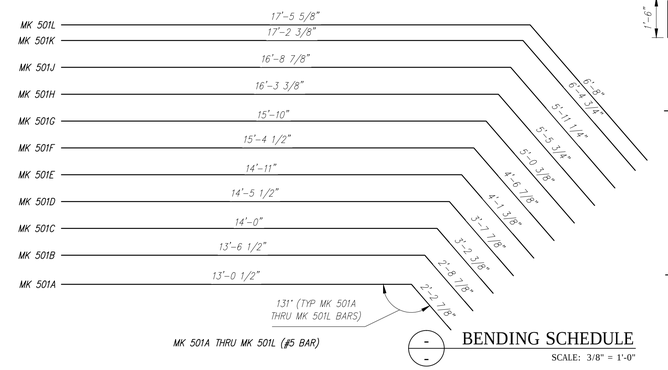

BENDING SCHEDULE
SCALE: 3/8" = 1'-0"

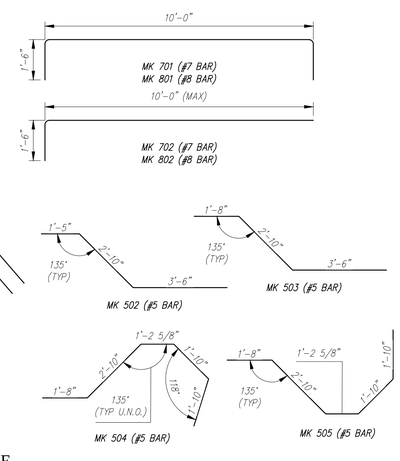

PIECE QUANTITY: 1 EACH
WEIGHT: 25.49 TONS

Contractor is to verify that all information shown on drawings has been thoroughly checked, complies with the contract documents and is adequate to meet the field conditions. Some dimensions and details may differ slightly from contract drawings to accommodate the manufacturing or design process. Approval of this drawing indicates that any deviation from the contract documents has been reviewed and found to be acceptable. Production will not commence until receipt of signed, approved shop drawings.

This drawing contains information proprietary to CONCRETE SYSTEMS, INC. This drawing is disclosed with the understanding that it will be retained in confidence and its use limited solely to the purpose for which it is disclosed. It is understood that no reproduction of this drawing is authorized without permission from CONCRETE SYSTEMS, INC. and that it will be returned to CONCRETE SYSTEMS, INC. upon request.

Rev.	Date	DESCRIPTION	By
10			
9			
8			
7			
6			
5			
4			
3			
2			
1	04/15/2016	ADDED NOTES/DIMENSIONS TO "REINFORCING PLAN"	AK

REVISIONS

This drawing is based upon information provided from the following documents and/or sources:
Engineer: STANTEC CONSULTING SERVICES, INC.
Project No:
Drawings: PROJECT PLANS
Specifications:
Other Sources:

Concrete Systems Inc.
9 Commercial St., Hudson, NH,03051
Phone 603-889-4163
Fax 603-889-2417

STATE AGENCY
VTrans Working to Get You There

Drawn By A KOSTENKO	Date 04/04/2016
Reviewed By	Date
Approved By	Date

VTAOT PROJ. NO.: BRF 0151(21)

MILLER CONSTRUCTION, INC.
ROUTE 106 BRIDGE REPLACEMENT T.H. 61 (KENDALL ROAD)
WOODSTOCK, VT

D — Drawing No. SHOP DRAWING – F8 — REV 1
R-S22624-F8

Quantity: 1 | Project No: | SHEET F8 OF

NOTES:
1. ALL REINFORCING TO BE LEVEL I, BLACK (UNCOATED).
2. COVER TO REINFORCING: SEE DETAILS

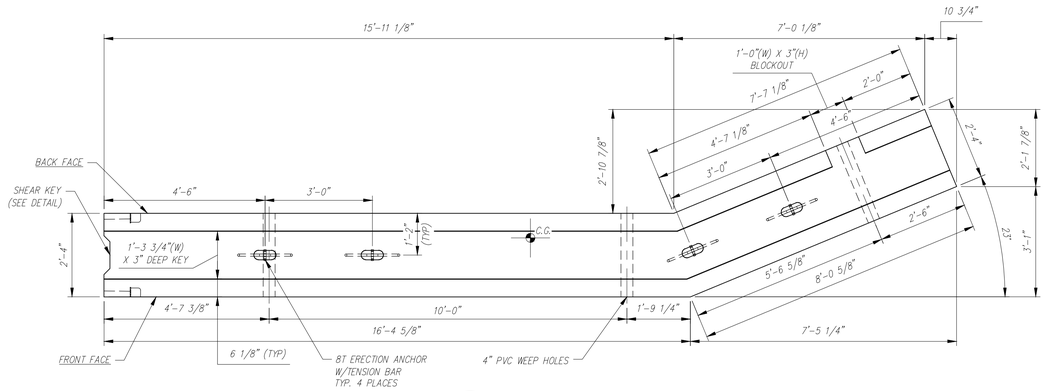

PLAN VIEW
SCALE: 1/2" = 1'-0"

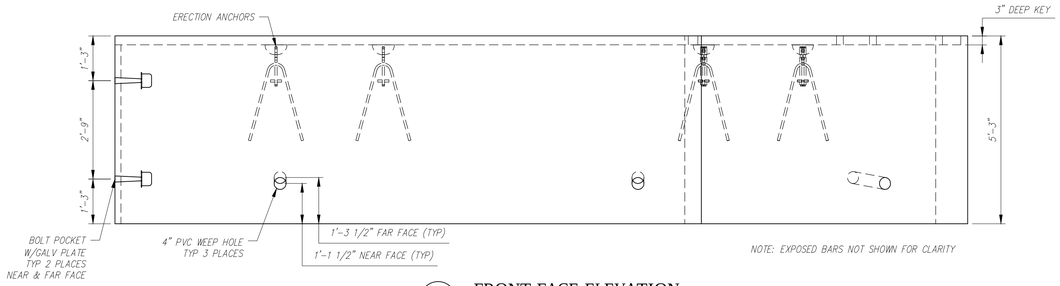

FRONT FACE ELEVATION
SCALE: 1/2" = 1'-0"

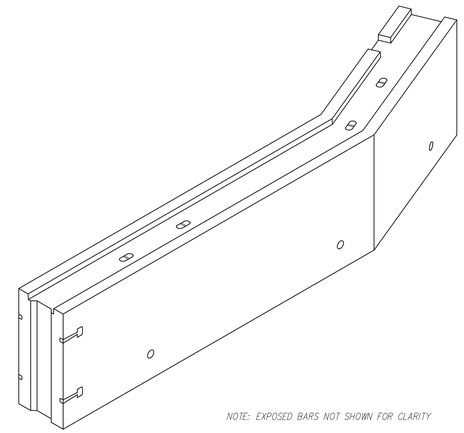

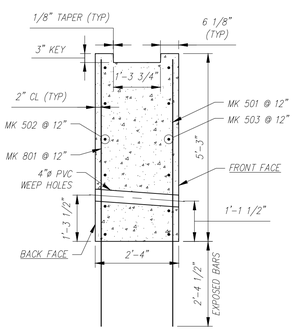

TYP. REINFORCING SECTION
SCALE: 1/2" = 1'-0"

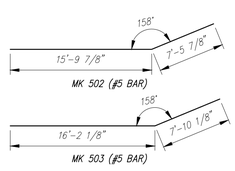

BENDING SCHEDULE
SCALE: 1/8" = 1'-0"

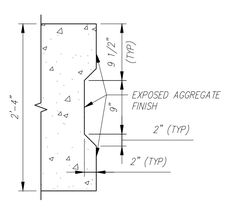

TYP. SHEAR KEY DETAIL (PLAN)
SCALE: 1" = 1'-0"

P1 - BILL OF MATERIALS / EMBEDS				
CSI ID#	DESCRIPTION	QTY	UM	COMMENTS
EM-00034	4" FOAM CORE PVC	7.5	FT	
EM-00122	8TON ERECTION ANCHOR GALV QL049G	4	EA	W/TENSION BAR
EM-00125	BOLT POCKET PLATES (GALVANIZED)	4	EA	
RM-00015	REBAR #5 BLACK-GR 60 40'	490	LB	
RM-00104	REBAR #8 BLACK GR 60	478	LB	
MX-FA5000SC30	MIX DESIGN - FLY ASH 5000 SELF COMPACTIN	10.53	CY	

P1 Rebar Schedule			
MK		QTY	LENGTH
501	#5	25	7 '- 5.5 "
502	#5	6	23 '- 3.5 "
503	#5	6	24 '- 0 "
801	#8	24	7 '- 5.5 "

PIECE QUANTITY: 1 EACH
WEIGHT: 21.31 TONS

Contractor is to verify that all information shown on drawings has been thoroughly checked, complies with the contract documents and is adequate to meet the field conditions. Some dimensions and details may differ slightly from contract drawings to accommodate the manufacturing or design process. Approval of this drawing indicates that any deviation from the contract documents has been reviewed and found to be acceptable. Production will not commence until receipt of signed, approved shop drawings.

This drawing contains information proprietary to CONCRETE SYSTEMS, INC. This drawing is disclosed with the understanding that it will be retained in confidence and its use limited solely to the purpose for which it is disclosed. It is understood that no reproduction of this drawing is authorized without permission from CONCRETE SYSTEMS, INC. and that it will be returned to CONCRETE SYSTEMS, INC. upon request.

Rev.	Date	DESCRIPTION	By
10			
9			
8			
7			
6			
5			
4			
3			
2			
1			

REVISIONS

This drawing is based upon information provided from the following documents and/or sources:
Engineer: STANTEC CONSULTING SERVICES, INC.
Project No:
Drawings: PROJECT PLANS
Specifications:
Other Sources:

Concrete Systems Inc.
9 Commercial St., Hudson, NH,03051
Phone 603-889-4163
Fax 603-889-2417

STATE AGENCY
VTrans Working to Get You There

Drawn By A KOSTENKO	Date 04/04/2016
Reviewed By	Date
Approved By	Date

VTAOT PROJ. NO.: BRF 0151(21)

MILLER CONSTRUCTION, INC.
ROUTE 106 BRIDGE REPLACEMENT T.H. 61 (KENDALL ROAD)
WOODSTOCK, VT

D | Drawing No. SHOP DRAWING – P1 R-S22624-P1 | REV 0

Quantity: 1 | Project No: | SHEET P1 OF

NOTES:
1. ALL REINFORCING TO BE LEVEL I, BLACK (UNCOATED).
2. COVER TO REINFORCING: SEE DETAILS

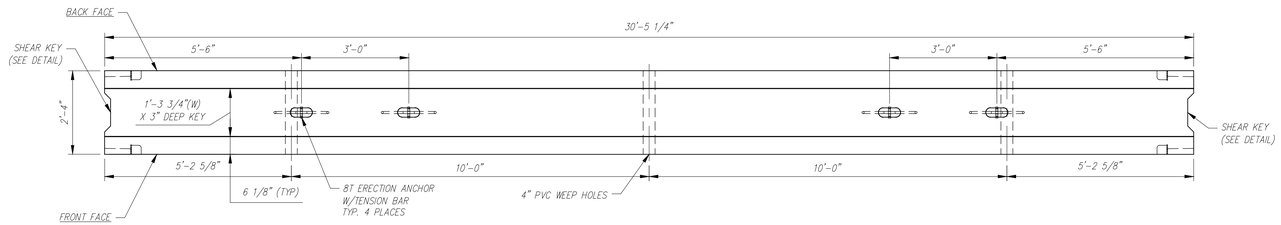

PLAN VIEW
SCALE: 1/2" = 1'-0"

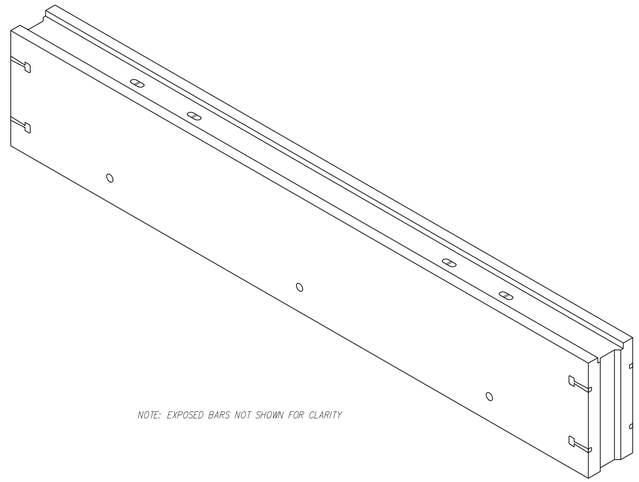

NOTE: EXPOSED BARS NOT SHOWN FOR CLARITY

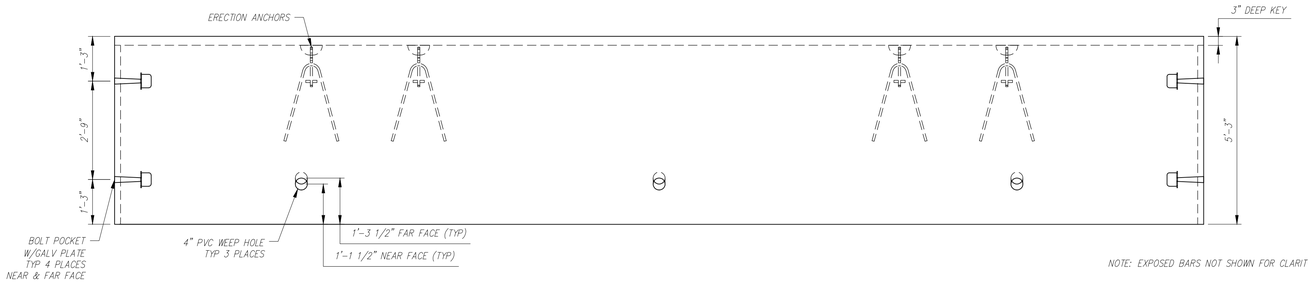

NOTE: EXPOSED BARS NOT SHOWN FOR CLARITY

FRONT FACE ELEVATION
SCALE: 1/2" = 1'-0"

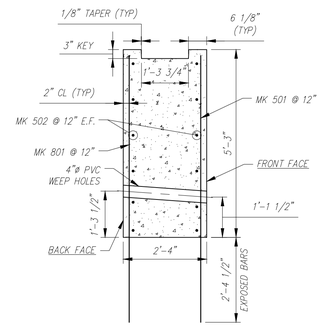

TYP. REINFORCING SECTION
SCALE: 1/2" = 1'-0"

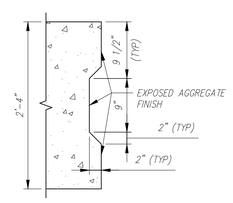

TYP. SHEAR KEY DETAIL (PLAN)
SCALE: 1" = 1'-0"

P2 - BILL OF MATERIALS / EMBEDS				
CSI ID#	DESCRIPTION	QTY	UM	COMMENTS
EM-00034	4" FOAM CORE PVC	7.5	FT	
EM-00122	8TON ERECTION ANCHOR GALV QL049G	4	EA	W/TENSION BAR
EM-00125	BOLT POCKET PLATES (GALVANIZED)	8	EA	
RM-00015	REBAR #5 BLACK-GR 60 40'	618	LB	
RM-00104	REBAR #8 BLACK GR 60	617	LB	
MX-FA5000SC30	MIX DESIGN - FLY ASH 5000 SELF COMPACTIN	13.35	CY	

P2 Rebar Schedule			
MK		QTY	LENGTH
501	#5	31	7 '- 5.5 "
502	#5	12	30 '- 1 "
801	#8	31	7 '- 5.5 "

PIECE QUANTITY: 2 EACH
WEIGHT: 27.04 TONS

Contractor is to verify that all information shown on drawings has been thoroughly checked, complies with the contract documents and is adequate to meet the field conditions. Some dimensions and details may differ slightly from contract drawings to accommodate the manufacturing or design process. Approval of this drawing indicates that any deviation from the contract documents has been reviewed and found to be acceptable. Production will not commence until receipt of signed, approved shop drawings.

This drawing contains information proprietary to CONCRETE SYSTEMS, INC. This drawing is disclosed with the understanding that it will be retained in confidence and its use limited solely to the purpose for which it is disclosed. It is understood that no reproduction of this drawing is authorized without permission from CONCRETE SYSTEMS, INC. and that it will be returned to CONCRETE SYSTEMS, INC. upon request.

Rev.	Date	DESCRIPTION	By
10			
9			
8			
7			
6			
5			
4			
3			
2			
1			

REVISIONS

This drawing is based upon information provided from the following documents and/or sources:
Engineer: STANTEC CONSULTING SERVICES, INC.
Project No:
Drawings: PROJECT PLANS
Specifications:
Other Sources:

CSI Concrete Systems Inc.
9 Commercial St., Hudson, NH,03051
Phone 603-889-4163
Fax 603-889-2417

STATE AGENCY
VTrans Working to Get You There

Drawn By	Date
A KOSTENKO	04/04/2016
Reviewed By	Date
Approved By	Date

VTAOT PROJ. NO.: BRF 0151(21)

MILLER CONSTRUCTION, INC.
ROUTE 106 BRIDGE REPLACEMENT T.H. 61 (KENDALL ROAD)
WOODSTOCK, VT

D | Drawing No. | SHOP DRAWING – P2 | REV 0
R-S22624-P2

Quantity: 1 | Project No: | SHEET P2 OF

NOTES:
1. ALL REINFORCING TO BE LEVEL I, BLACK (UNCOATED).
2. COVER TO REINFORCING: SEE DETAILS

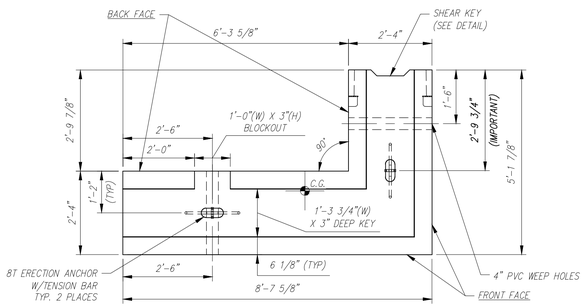

PLAN VIEW
SCALE: 1/2" = 1'-0"

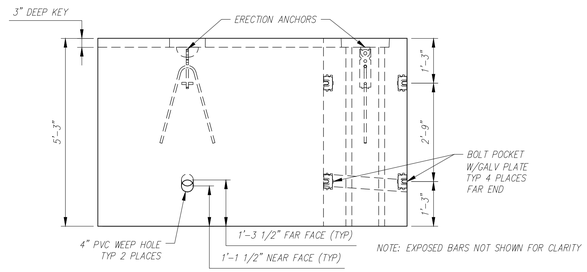

FRONT FACE ELEVATION
SCALE: 1/2" = 1'-0"

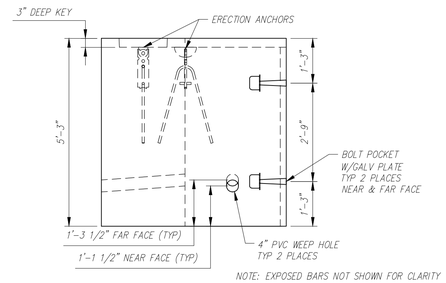

RIGHT SIDE ELEVATION
SCALE: 1/2" = 1'-0"

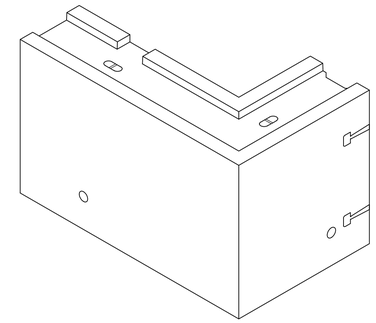

NOTE: EXPOSED BARS NOT SHOWN FOR CLARITY

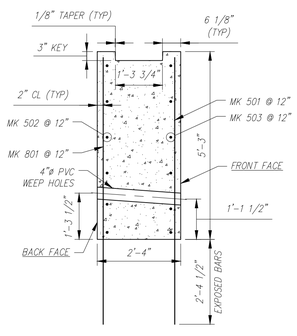

TYP. REINFORCING SECTION
SCALE: 1/2" = 1'-0"

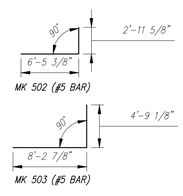

BENDING SCHEDULE
SCALE: 1/8" = 1'-0"

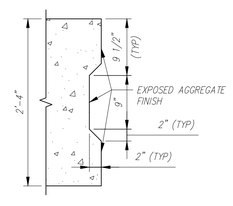

TYP. SHEAR KEY DETAIL (PLAN)
SCALE: 1" = 1'-0"

P3 - BILL OF MATERIALS / EMBEDS				
CSI ID#	DESCRIPTION	QTY	UM	COMMENTS
EM-00034	4" FOAM CORE PVC	5	FT	
EM-00122	8TON ERECTION ANCHOR GALV QL049G	2	EA	W/TENSION BAR
EM-00125	BOLT POCKET PLATES (GALVANIZED)	4	EA	
RM-00015	REBAR #5 BLACK-GR 60 40'	257	LB	
RM-00104	REBAR #8 BLACK GR 60	219	LB	
MX-FA5000SC30	MIX DESIGN - FLY ASH 5000 SELF COMPACTIN	5.01	CY	

P3 Rebar Schedule		
MK	QTY	LENGTH
501 #5	15	7 '- 5.5 "
502 #5	6	9 '- 5 "
503 #5	6	13 '- 0 "
801 #8	11	7 '- 5.5 "

PIECE QUANTITY: 1 EACH
WEIGHT: 10.15 TONS

Contractor is to verify that all information shown on drawings has been thoroughly checked, complies with the contract documents and is adequate to meet the field conditions. Some dimensions and details may differ slightly from contract drawings to accommodate the manufacturing or design process. Approval of this drawing indicates that any deviation from the contract documents has been reviewed and found to be acceptable. Production will not commence until receipt of signed, approved shop drawings.

This drawing contains information proprietary to CONCRETE SYSTEMS, INC. This drawing is disclosed with the understanding that it will be retained in confidence and its use limited solely to the purpose for which it is disclosed. It is understood that no reproduction of this drawing is authorized without permission from CONCRETE SYSTEMS, INC. and that it will be returned to CONCRETE SYSTEMS, INC. upon request.

Rev.	Date	DESCRIPTION	By
10			
9			
8			
7			
6			
5			
4			
3			
2			
1			

REVISIONS

This drawing is based upon information provided from the following documents and/or sources:
Engineer: STANTEC CONSULTING SERVICES, INC.
Project No:
Drawings: PROJECT PLANS
Specifications:
Other Sources:

CSI Concrete Systems Inc.
9 Commercial St., Hudson, NH,03051
Phone 603-889-4163
Fax 603-889-2417

STATE AGENCY
VTrans Working to Get You There

Drawn By A KOSTENKO	Date 04/04/2016
Reviewed By	Date
Approved By	Date

VTAOT PROJ. NO.: BRF 0151(21)

MILLER CONSTRUCTION, INC.
ROUTE 106 BRIDGE REPLACEMENT T.H. 61 (KENDALL ROAD)
WOODSTOCK, VT

D — Drawing No. SHOP DRAWING – P3 — REV 0
R-S22624-P3

Quantity: 1 | Project No: | SHEET P3 OF

NOTES:
1. ALL REINFORCING TO BE LEVEL I, BLACK (UNCOATED).
2. COVER TO REINFORCING: SEE DETAILS

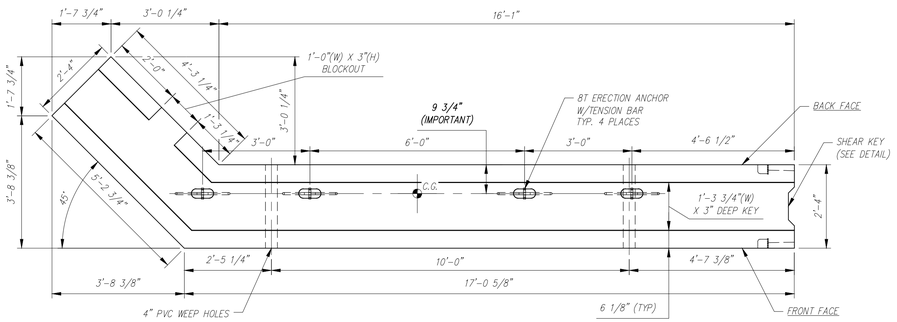

PLAN VIEW
SCALE: 1/2" = 1'-0"

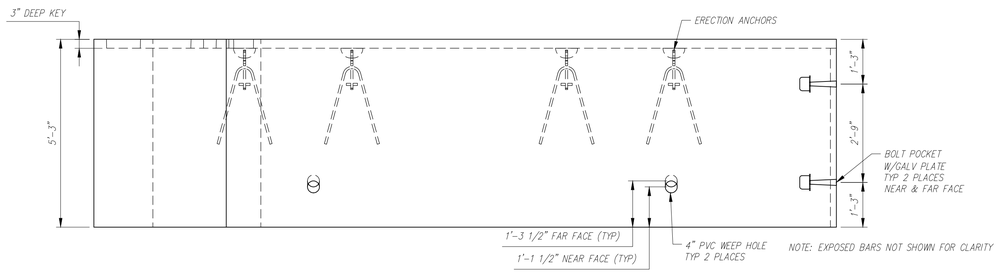

FRONT FACE ELEVATION
SCALE: 1/2" = 1'-0"

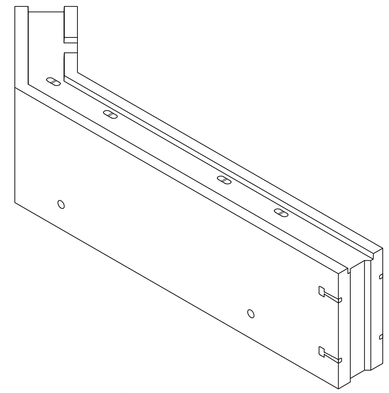

NOTE: EXPOSED BARS NOT SHOWN FOR CLARITY

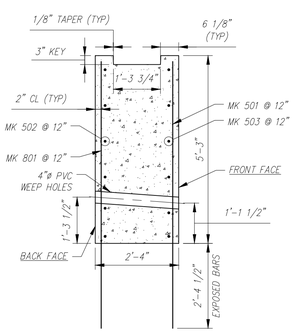

TYP. REINFORCING SECTION
SCALE: 1/2" = 1'-0"

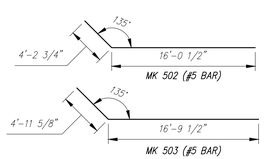

BENDING SCHEDULE
SCALE: 1/8" = 1'-0"

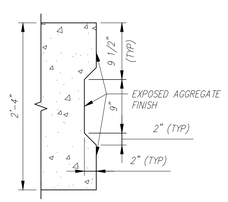

TYP. SHEAR KEY DETAIL (PLAN)
SCALE: 1" = 1'-0"

P4 - BILL OF MATERIALS / EMBEDS				
CSI ID#	DESCRIPTION	QTY	UM	COMMENTS
EM-00034	4" FOAM CORE PVC	5	FT	
EM-00122	8TON ERECTION ANCHOR GALV QL049G	4	EA	W/TENSION BAR
EM-00125	BOLT POCKET PLATES (GALVANIZED)	4	EA	
RM-00015	REBAR #5 BLACK-GR 60 40'	442	LB	
RM-00104	REBAR #8 BLACK GR 60	418	LB	
MX-FA5000SC30	MIX DESIGN - FLY ASH 5000 SELF COMPACTIN	9.36	CY	

P4 Rebar Schedule			
MK		QTY	LENGTH
501	#5	23	7 '- 5.5 "
502	#5	6	20 '- 3 "
503	#5	6	21 '- 9 "
801	#8	21	7 '- 5.5 "

PIECE QUANTITY: 1 EACH
WEIGHT: 18.95 TONS

Contractor is to verify that all information shown on drawings has been thoroughly checked, complies with the contract documents and is adequate to meet the field conditions. Some dimensions and details may differ slightly from contract drawings to accommodate the manufacturing or design process. Approval of this drawing indicates that any deviation from the contract documents has been reviewed and found to be acceptable. Production will not commence until receipt of signed, approved shop drawings.

This drawing contains information proprietary to CONCRETE SYSTEMS, INC. This drawing is disclosed with the understanding that it will be retained in confidence and its use limited solely to the purpose for which it is disclosed. It is understood that no reproduction of this drawing is authorized without permission from CONCRETE SYSTEMS, INC. and that it will be returned to CONCRETE SYSTEMS, INC. upon request.

Rev.	Date	DESCRIPTION	By
10			
9			
8			
7			
6			
5			
4			
3			
2			
1			

REVISIONS

This drawing is based upon information provided from the following documents and/or sources:
Engineer: STANTEC CONSULTING SERVICES, INC.
Project No:
Drawings: PROJECT PLANS
Specifications:
Other Sources:

Concrete Systems Inc.
9 Commercial St., Hudson, NH,03051
Phone 603-889-4163
Fax 603-889-2417

STATE AGENCY
VTrans Working to Get You There

Drawn By: A KOSTENKO — Date: 04/04/2016
Reviewed By — Date
Approved By — Date

VTAOT PROJ. NO.: BRF 0151(21)

MILLER CONSTRUCTION, INC.
ROUTE 106 BRIDGE REPLACEMENT T.H. 61 (KENDALL ROAD)
WOODSTOCK, VT

D — SHOP DRAWING – P4 — REV 0
Drawing No. R-S22624-P4
Quantity: 1 — Project No: — SHEET P4 OF

NOTES:
1. ALL REINFORCING TO BE LEVEL I, BLACK (UNCOATED).
2. COVER TO REINFORCING: SEE DETAILS

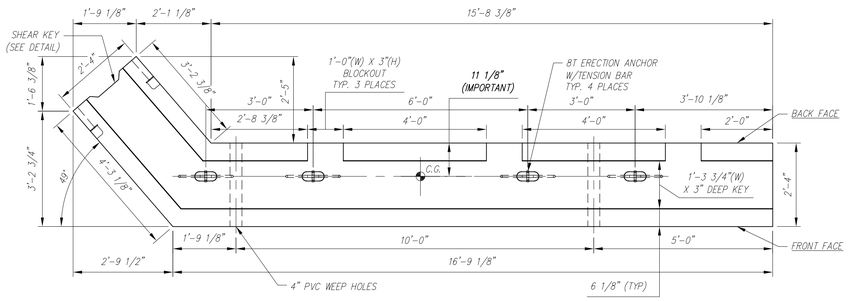

PLAN VIEW
SCALE: 1/2" = 1'-0"

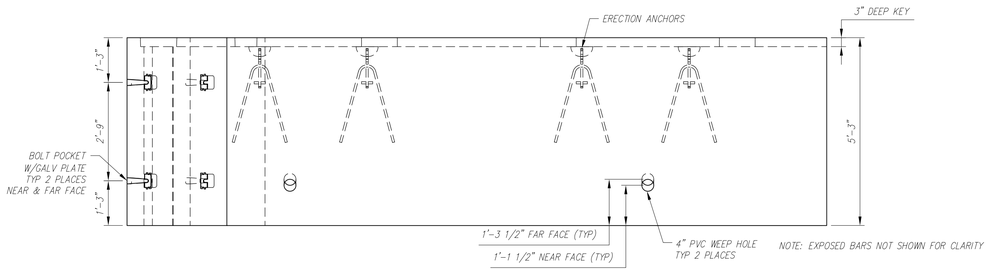

FRONT FACE ELEVATION
SCALE: 1/2" = 1'-0"

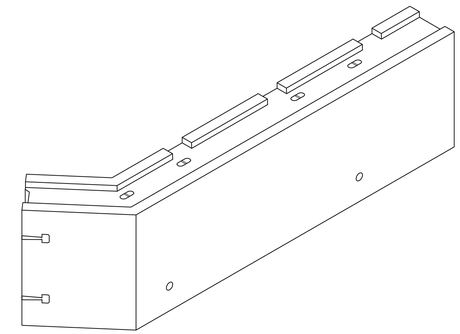

NOTE: EXPOSED BARS NOT SHOWN FOR CLARITY

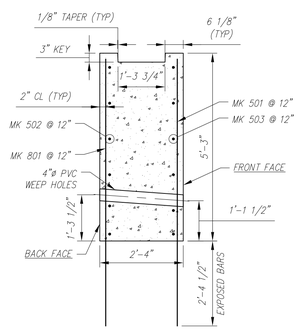

TYP. REINFORCING SECTION
SCALE: 1/2" = 1'-0"

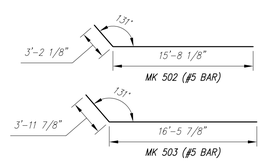

BENDING SCHEDULE
SCALE: 1/8" = 1'-0"

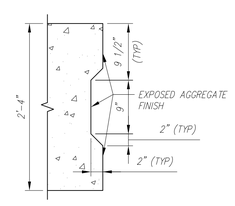

TYP. SHEAR KEY DETAIL (PLAN)
SCALE: 1" = 1'-0"

P5 - BILL OF MATERIALS / EMBEDS				
CSI ID#	DESCRIPTION	QTY	UM	COMMENTS
EM-00034	4" FOAM CORE PVC	5	FT	
EM-00122	8TON ERECTION ANCHOR GALV QL049G	4	EA	W/TENSION BAR
EM-00125	BOLT POCKET PLATES (GALVANIZED)	4	EA	
RM-00015	REBAR #5 BLACK-GR 60 40'	417	LB	
RM-00104	REBAR #8 BLACK GR 60	398	LB	
MX-FA5000SC30	MIX DESIGN - FLY ASH 5000 SELF COMPACTIN	8.75	CY	

P5 Rebar Schedule			
MK		QTY	LENGTH
501	#5	22	7 ' - 5.5 "
502	#5	6	18 ' - 10 "
503	#5	6	20 ' - 5.5 "
801	#8	20	7 ' - 5.5 "

PIECE QUANTITY: 1 EACH
WEIGHT: 17.72 TONS

Contractor is to verify that all information shown on drawings has been thoroughly checked, complies with the contract documents and is adequate to meet the field conditions. Some dimensions and details may differ slightly from contract drawings to accommodate the manufacturing or design process. Approval of this drawing indicates that any deviation from the contract documents has been reviewed and found to be acceptable. Production will not commence until receipt of signed, approved shop drawings.

This drawing contains information proprietary to CONCRETE SYSTEMS, INC. This drawing is disclosed with the understanding that it will be retained in confidence and its use limited solely to the purpose for which it is disclosed. It is understood that no reproduction of this drawing is authorized without permission from CONCRETE SYSTEMS, INC. and that it will be returned to CONCRETE SYSTEMS, INC. upon request.

Rev.	Date	DESCRIPTION	By
10			
9			
8			
7			
6			
5			
4			
3			
2			
1			

REVISIONS

This drawing is based upon information provided from the following documents and/or sources:
Engineer: STANTEC CONSULTING SERVICES, INC.
Project No:
Drawings: PROJECT PLANS
Specifications:
Other Sources:

CSI Concrete Systems Inc.
9 Commercial St., Hudson, NH,03051
Phone 603-889-4163
Fax 603-889-2417

STATE AGENCY
VTrans Working to Get You There

Drawn By: A KOSTENKO — Date: 04/04/2016
Reviewed By — Date
Approved By — Date

VTAOT PROJ. NO.: BRF 0151(21)

MILLER CONSTRUCTION, INC.
ROUTE 106 BRIDGE REPLACEMENT T.H. 61 (KENDALL ROAD)
WOODSTOCK, VT

D — Drawing No. SHOP DRAWING – P5 — REV 0
R-S22624-P5

Quantity: 1 — Project No: — SHEET P5 OF

NOTES:
1. ALL REINFORCING TO BE LEVEL I, EPOXY COATED.
2. COVER TO REINFORCING: SEE DETAILS

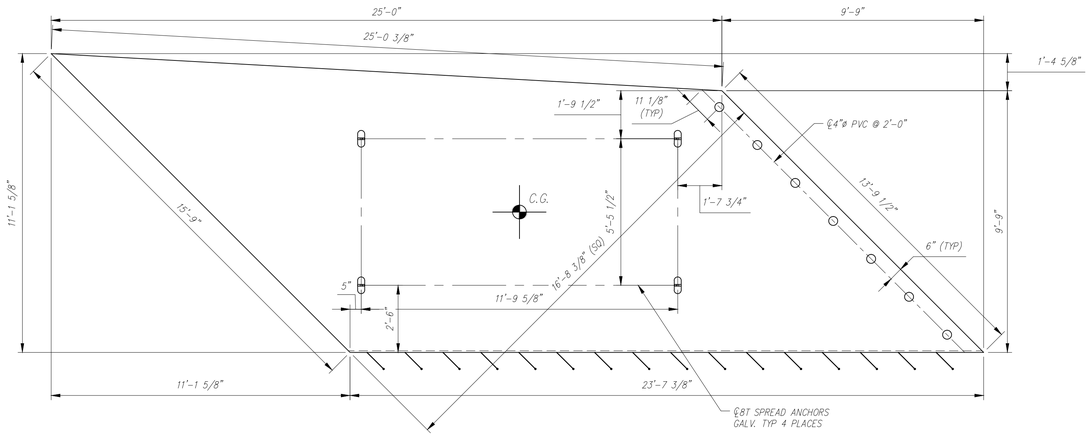

PLAN VIEW
SCALE: 3/8" = 1'-0"

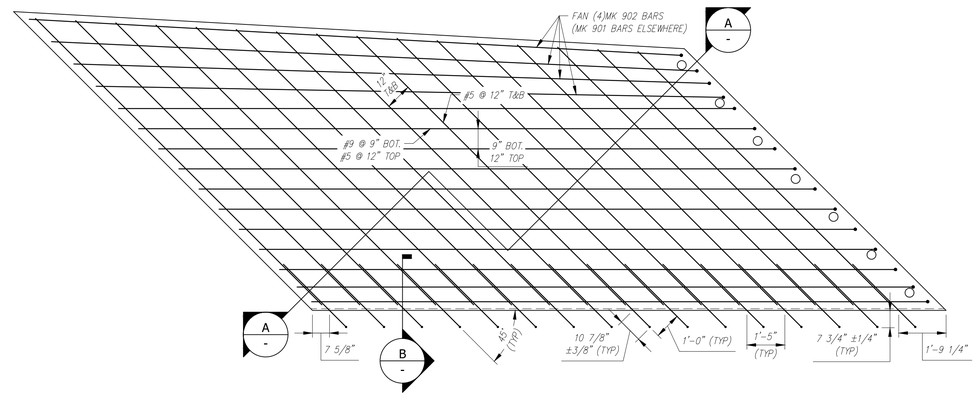

REINFORCING PLAN
SCALE: 3/8" = 1'-0"

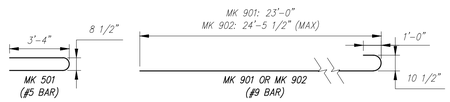

BENDING SCHEDULE
SCALE: 1/4" = 1'-0"

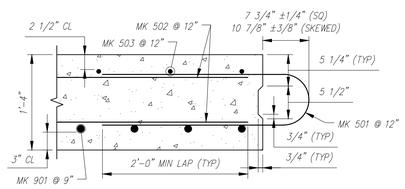

SECTION
SCALE: 1" = 1'-0"

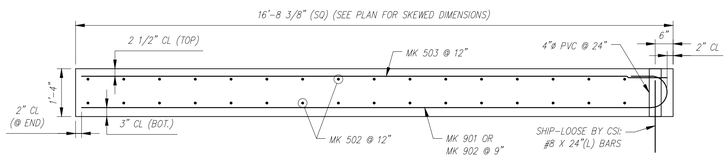

TYPICAL REINFORCING SECTION
SCALE: 1/2" = 1'-0"

AS1 - BILL OF MATERIALS / EMBEDS				
CSI ID#	DESCRIPTION	QTY	UM	COMMENTS
EM-00034	4" FOAM CORE PVC	9.5	FT	
EM-00039	SPREAD ANCHORS 8T GALV	4	EA	
RM-00016	REBAR #5 EPOXY- GR 60 40'	906	LB	
RM-00090	REBAR #9 EPOXY-GR 60	1286	LB	
MX-FA5000SC30	MIX DESIGN - FLY ASH 5000 SELF COMPACTIN	12.18	CY	

ALL REBAR TO BE EPOXY COATED

AS1 Rebar Schedule				
MK		QTY	LENGTH	
501	#5	16	7 ' - 4 "	
502	#5	32	15 ' - 1 "	MAX
503	#5	11	24 ' - 5.5 "	MAX
901	#9	11	24 ' - 10 "	
902	#9	4	26 ' - 3.5 "	MAX

PIECE QUANTITY: 1 EACH
WEIGHT: 24.67 TONS

Contractor is to verify that all information shown on drawings has been thoroughly checked, complies with the contract documents and is adequate to meet the field conditions. Some dimensions and details may differ slightly from contract drawings to accommodate the manufacturing or design process. Approval of this drawing indicates that any deviation from the contract documents has been reviewed and found to be acceptable. Production will not commence until receipt of signed, approved shop drawings.

This drawing contains information proprietary to CONCRETE SYSTEMS, INC. This drawing is disclosed with the understanding that it will be retained in confidence and its use limited solely to the purpose for which it is disclosed. It is understood that no reproduction of this drawing is authorized without permission from CONCRETE SYSTEMS, INC. and that it will be returned to CONCRETE SYSTEMS, INC. upon request.

Rev.	Date	DESCRIPTION	By
10			
9			
8			
7			
6			
5			
4			
3			
2			
1			

REVISIONS

This drawing is based upon information provided from the following documents and/or sources:
Engineer: STANTEC CONSULTING SERVICES, INC.
Project No:
Drawings: PROJECT PLANS
Specifications:
Other Sources:

CSI Concrete Systems Inc.
9 Commercial St., Hudson, NH,03051
Phone 603-889-4163
Fax 603-889-2417

STATE AGENCY
VTrans Working to Get You There

Drawn By	Date
A KOSTENKO	04/04/2016
Reviewed By	Date
Approved By	Date

VTAOT PROJ. NO.: BRF 0151(21)

MILLER CONSTRUCTION, INC.
ROUTE 106 BRIDGE REPLACEMENT T.H. 61 (KENDALL ROAD)
WOODSTOCK, VT

D | Drawing No. | SHOP DRAWING – AS1 | REV 0
R-S22624-AS1

Quantity: | Project No: | SHEET AS1 OF

NOTES:
1. ALL REINFORCING TO BE LEVEL I, EPOXY COATED.
2. COVER TO REINFORCING: SEE DETAILS

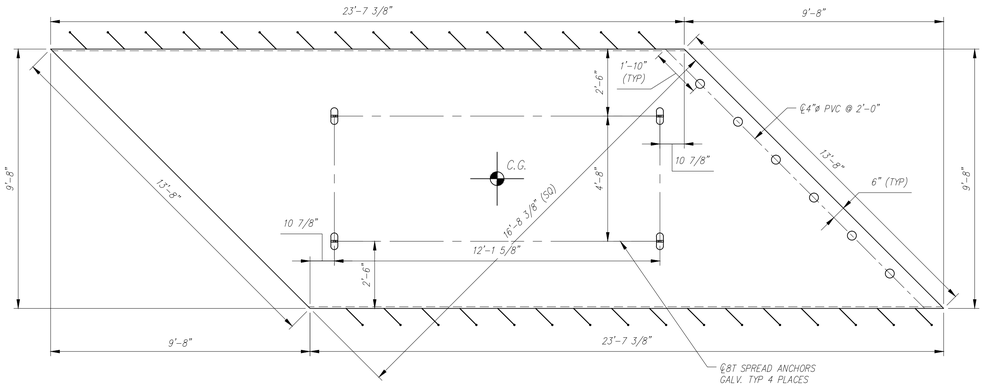

PLAN VIEW
SCALE: 3/8" = 1'-0"

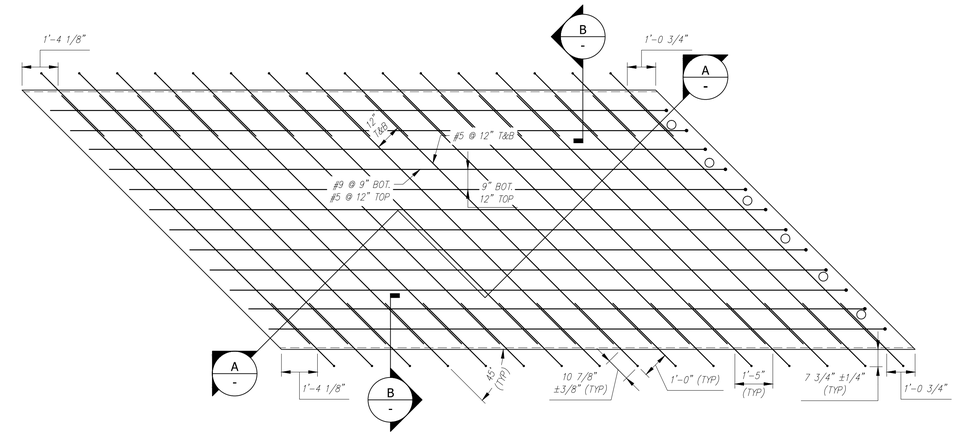

REINFORCING PLAN
SCALE: 3/8" = 1'-0"

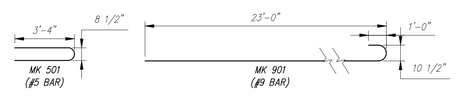

BENDING SCHEDULE
SCALE: 1/4" = 1'-0"

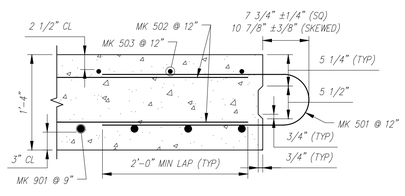

SECTION
SCALE: 1" = 1'-0"

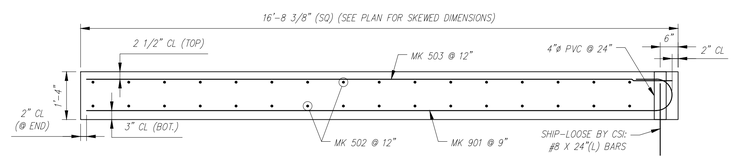

TYPICAL REINFORCING SECTION
SCALE: 1/2" = 1'-0"

AS2 - BILL OF MATERIALS / EMBEDS				
CSI ID#	DESCRIPTION	QTY	UM	COMMENTS
EM-00034	4" FOAM CORE PVC	8	FT	
EM-00039	SPREAD ANCHORS 8T GALV	4	EA	
RM-00016	REBAR #5 EPOXY- GR 60 40'	921	LB	
RM-00090	REBAR #9 EPOXY-GR 60	1013	LB	
MX-FA5000SC30	MIX DESIGN - FLY ASH 5000 SELF COMPACTIN	11.27	CY	

ALL REBAR TO BE EPOXY COATED

AS2 Rebar Schedule			
MK		QTY	LENGTH
501	#5	32	7 '- 4 "
502	#5	32	13 '- 1 "
503	#5	10	23 '- 0 "
901	#9	12	24 '- 10 "

PIECE QUANTITY: 1 EACH
WEIGHT: 22.83 TONS

Contractor is to verify that all information shown on drawings has been thoroughly checked, complies with the contract documents and is adequate to meet the field conditions. Some dimensions and details may differ slightly from contract drawings to accommodate the manufacturing or design process. Approval of this drawing indicates that any deviation from the contract documents has been reviewed and found to be acceptable. Production will not commence until receipt of signed, approved shop drawings.

This drawing contains information proprietary to CONCRETE SYSTEMS, INC. This drawing is disclosed with the understanding that it will be retained in confidence and its use limited solely to the purpose for which it is disclosed. It is understood that no reproduction of this drawing is authorized without permission from CONCRETE SYSTEMS, INC. and that it will be returned to CONCRETE SYSTEMS, INC. upon request.

Rev.	Date	DESCRIPTION	By
10			
9			
8			
7			
6			
5			
4			
3			
2			
1			

REVISIONS

This drawing is based upon information provided from the following documents and/or sources:
Engineer: STANTEC CONSULTING SERVICES, INC.
Project No:
Drawings: PROJECT PLANS
Specifications:
Other Sources:

Concrete Systems Inc.
9 Commercial St., Hudson, NH,03051
Phone 603-889-4163
Fax 603-889-2417

STATE AGENCY
VTrans Working to Get You There

Drawn By A KOSTENKO	Date 04/04/2016
Reviewed By	Date
Approved By	Date

VTAOT PROJ. NO.: BRF 0151(21)

MILLER CONSTRUCTION, INC.
ROUTE 106 BRIDGE REPLACEMENT T.H. 61 (KENDALL ROAD)
WOODSTOCK, VT

D | Drawing No. SHOP DRAWING – AS2 R-S22624-AS2 | REV 0

Quantity: | Project No: | SHEET AS2 OF

NOTES:
1. ALL REINFORCING TO BE LEVEL I, EPOXY COATED.
2. COVER TO REINFORCING: SEE DETAILS

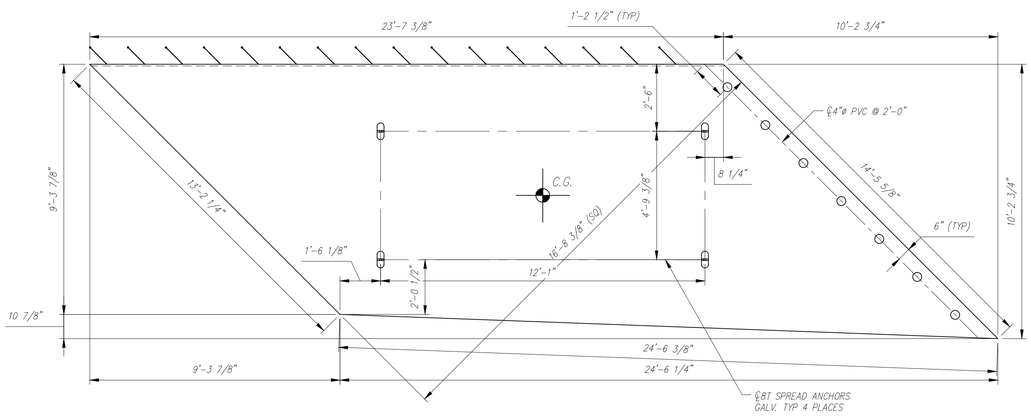

PLAN VIEW
SCALE: 3/8" = 1'-0"

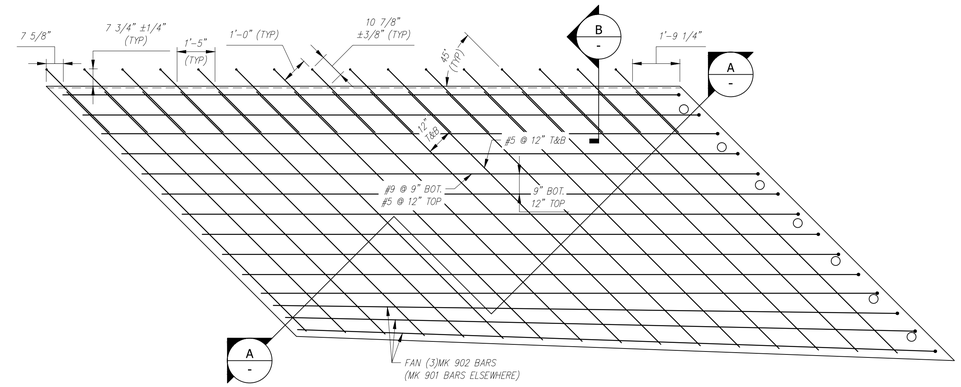

REINFORCING PLAN
SCALE: 3/8" = 1'-0"

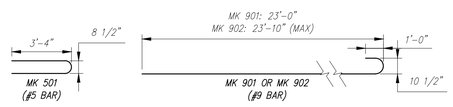

BENDING SCHEDULE
SCALE: 1/4" = 1'-0"

AS3 - BILL OF MATERIALS / EMBEDS				
CSI ID#	DESCRIPTION	QTY	UM	COMMENTS
EM-00034	4" FOAM CORE PVC	9.5	FT	
EM-00039	SPREAD ANCHORS 8T GALV	4	EA	
RM-00016	REBAR #5 EPOXY- GR 60 40'	857	LB	
RM-00090	REBAR #9 EPOXY-GR 60	1191	LB	
MK-FA5000SC30	MIX DESIGN - FLY ASH 5000 SELF COMPACTIN	11.40	CY	

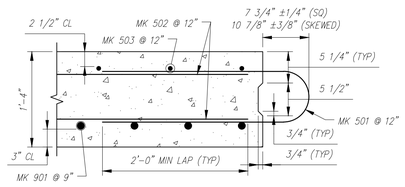

SECTION
SCALE: 1" = 1'-0"

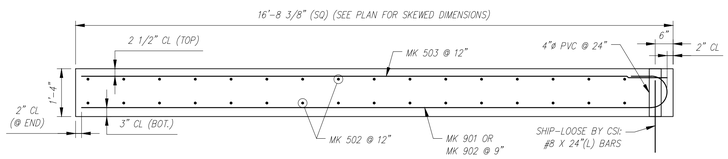

TYPICAL REINFORCING SECTION
SCALE: 1/2" = 1'-0"

ALL REBAR TO BE EPOXY COATED

AS3 Rebar Schedule				
MK		QTY	LENGTH	
501	#5	16	7' - 4"	
502	#5	32	13' - 10"	MAX
503	#5	11	23' - 10"	MAX
901	#9	11	24' - 10"	
902	#9	3	25' - 8"	MAX

PIECE QUANTITY: 1 EACH
WEIGHT: 23.09 TONS

Contractor is to verify that all information shown on drawings has been thoroughly checked, complies with the contract documents and is adequate to meet the field conditions. Some dimensions and details may differ slightly from contract drawings to accommodate the manufacturing or design process. Approval of this drawing indicates that any deviation from the contract documents has been reviewed and found to be acceptable. Production will not commence until receipt of signed, approved shop drawings.

This drawing contains information proprietary to CONCRETE SYSTEMS, INC. This drawing is disclosed with the understanding that it will be retained in confidence and its use limited solely to the purpose for which it is disclosed. It is understood that no reproduction of this drawing is authorized without permission from CONCRETE SYSTEMS, INC. and that it will be returned to CONCRETE SYSTEMS, INC. upon request.

Rev.	Date	DESCRIPTION	By
10			
9			
8			
7			
6			
5			
4			
3			
2			
1			

REVISIONS

This drawing is based upon information provided from the following documents and/or sources:
Engineer: STANTEC CONSULTING SERVICES, INC.
Project No:
Drawings: PROJECT PLANS
Specifications:
Other Sources:

Concrete Systems Inc.
9 Commercial St., Hudson, NH,03051
Phone 603-889-4163
Fax 603-889-2417

STATE AGENCY
VTrans Working to Get You There

Drawn By: A KOSTENKO	Date: 04/04/2016
Reviewed By	Date
Approved By	Date

VTAOT PROJ. NO.: BRF 0151(21)

MILLER CONSTRUCTION, INC.
ROUTE 106 BRIDGE REPLACEMENT T.H. 61 (KENDALL ROAD)
WOODSTOCK, VT

D — Drawing No. SHOP DRAWING – AS3 — REV 0
R-S22624-AS3

Quantity: | Project No: | SHEET AS3 OF

NOTES:
1. ALL REINFORCING TO BE LEVEL I, EPOXY COATED.
2. COVER TO REINFORCING: SEE DETAILS

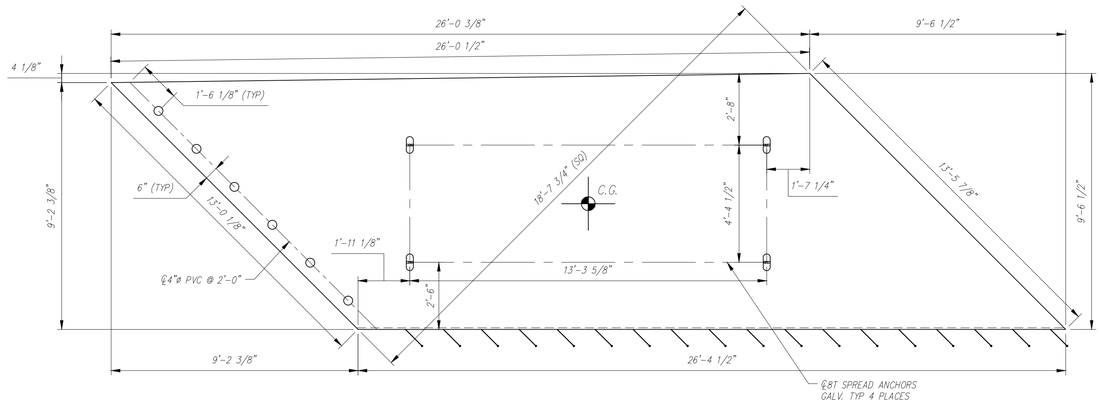

PLAN VIEW
SCALE: 3/8" = 1'-0"

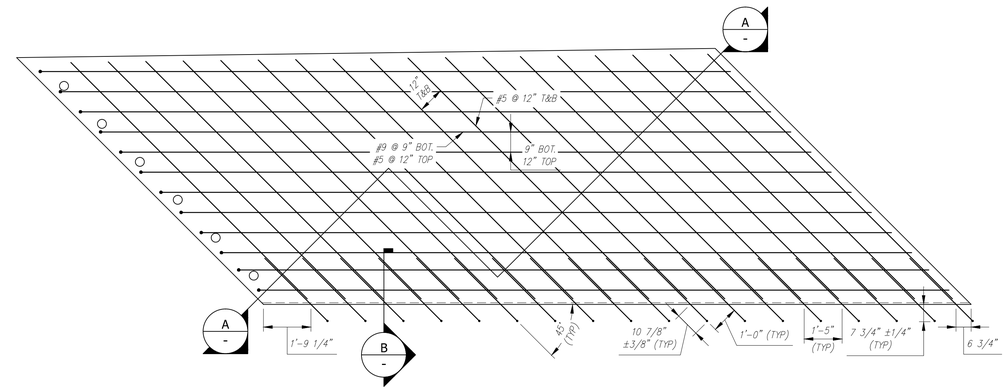

REINFORCING PLAN
SCALE: 3/8" = 1'-0"

BENDING SCHEDULE
SCALE: 1/4" = 1'-0"

AS4 - BILL OF MATERIALS / EMBEDS				
CSI ID#	DESCRIPTION	QTY	UM	COMMENTS
EM-00034	4" FOAM CORE PVC	8	FT	
EM-00039	SPREAD ANCHORS 8T GALV	4	EA	
RM-00016	REBAR #5 EPOXY- GR 60 40'	891	LB	
RM-00090	REBAR #9 EPOXY-GR 60	1125	LB	
MX-FA5000SC30	MIX DESIGN - FLY ASH 5000 SELF COMPACTIN	12.20	CY	

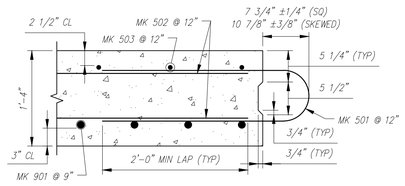

SECTION
SCALE: 1" = 1'-0"

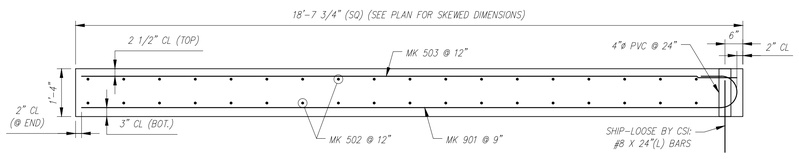

TYPICAL REINFORCING SECTION
SCALE: 1/2" = 1'-0"

ALL REBAR TO BE EPOXY COATED

AS4 Rebar Schedule				
MK		QTY	LENGTH	
501	#5	18	7 ' - 4 "	
502	#5	36	12 ' - 11 "	MAX
503	#5	10	25 ' - 9 "	
901	#9	12	27 ' - 7 "	

PIECE QUANTITY: 1 EACH
WEIGHT: 24.71 TONS

Contractor is to verify that all information shown on drawings has been thoroughly checked, complies with the contract documents and is adequate to meet the field conditions. Some dimensions and details may differ slightly from contract drawings to accommodate the manufacturing or design process. Approval of this drawing indicates that any deviation from the contract documents has been reviewed and found to be acceptable. Production will not commence until receipt of signed, approved shop drawings.

This drawing contains information proprietary to CONCRETE SYSTEMS, INC. This drawing is disclosed with the understanding that it will be retained in confidence and its use limited solely to the purpose for which it is disclosed. It is understood that no reproduction of this drawing is authorized without permission from CONCRETE SYSTEMS, INC. and that it will be returned to CONCRETE SYSTEMS, INC. upon request.

Rev.	Date	DESCRIPTION	By
10			
9			
8			
7			
6			
5			
4			
3			
2			
1	04/15/2016	MK 901 BAR LENGTH	AK

REVISIONS

This drawing is based upon information provided from the following documents and/or sources:
Engineer: STANTEC CONSULTING SERVICES, INC.
Project No:
Drawings: PROJECT PLANS
Specifications:
Other Sources:

Concrete Systems Inc.
9 Commercial St., Hudson, NH,03051
Phone 603-889-4163
Fax 603-889-2417

STATE AGENCY
VTrans Working to Get You There

Drawn By: A KOSTENKO — Date: 04/04/2016
Reviewed By — Date
Approved By — Date

VTAOT PROJ. NO.: BRF 0151(21)

MILLER CONSTRUCTION, INC.
ROUTE 106 BRIDGE REPLACEMENT T.H. 61 (KENDALL ROAD)
WOODSTOCK, VT

D — Drawing No. SHOP DRAWING – AS4 — REV 1
R-S22624-AS4

Quantity: | Project No: | SHEET AS4 OF

NOTES:
1. ALL REINFORCING TO BE LEVEL I, EPOXY COATED.
2. COVER TO REINFORCING: SEE DETAILS

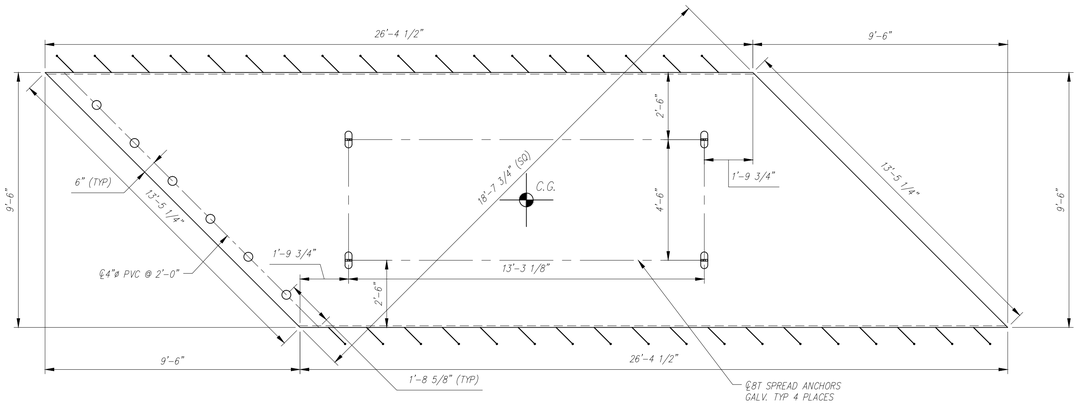

- / - PLAN VIEW
SCALE: 3/8" = 1'-0"

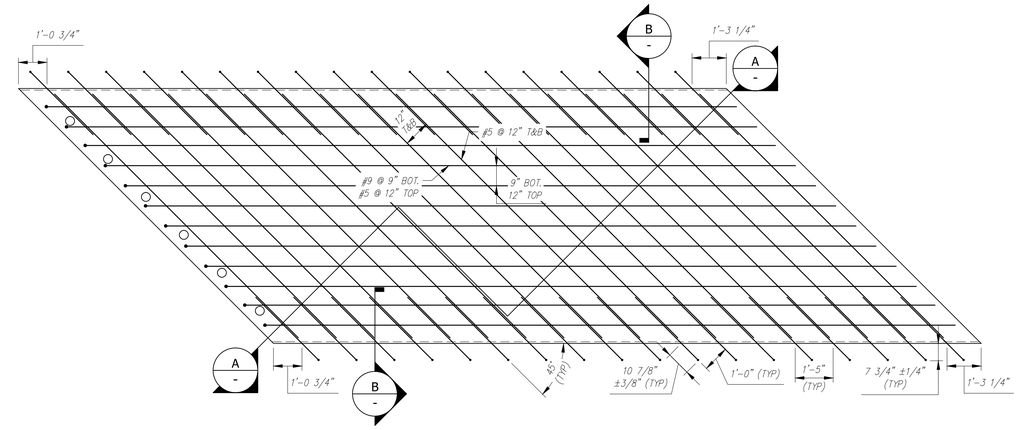

- / - REINFORCING PLAN
SCALE: 3/8" = 1'-0"

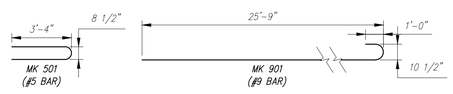

- / - BENDING SCHEDULE
SCALE: 1/4" = 1'-0"

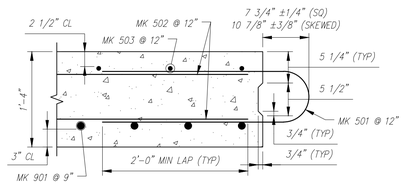

B / - SECTION
SCALE: 1" = 1'-0"

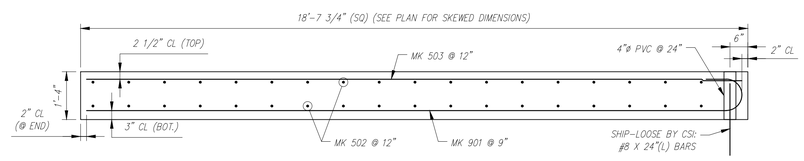

A-A / - TYPICAL REINFORCING SECTION
SCALE: 1/2" = 1'-0"

AS5 - BILL OF MATERIALS / EMBEDS				
CSI ID#	DESCRIPTION	QTY	UM	COMMENTS
EM-00034	4" FOAM CORE PVC	6	FT	
EM-00039	SPREAD ANCHORS 8T GALV	4	EA	
RM-00016	REBAR #5 EPOXY- GR 60 40'	1029	LB	
RM-00090	REBAR #9 EPOXY-GR 60	1125	LB	
MX-FA5000SC30	MIX DESIGN - FLY ASH 5000 SELF COMPACTIN	12.37	CY	

ALL REBAR TO BE EPOXY COATED

AS5 Rebar Schedule			
MK		QTY	LENGTH
501	#5	36	7 ' - 4 "
502	#5	36	12 ' - 11 "
503	#5	10	25 ' - 9 "
901	#9	12	27 ' - 7 "

PIECE QUANTITY: 1 EACH
WEIGHT: 25.06 TONS

Contractor is to verify that all information shown on drawings has been thoroughly checked, complies with the contract documents and is adequate to meet the field conditions. Some dimensions and details may differ slightly from contract drawings to accommodate the manufacturing or design process. Approval of this drawing indicates that any deviation from the contract documents has been reviewed and found to be acceptable. Production will not commence until receipt of signed, approved shop drawings.

This drawing contains information proprietary to CONCRETE SYSTEMS, INC. This drawing is disclosed with the understanding that it will be retained in confidence and its use limited solely to the purpose for which it is disclosed. It is understood that no reproduction of this drawing is authorized without permission from CONCRETE SYSTEMS, INC. and that it will be returned to CONCRETE SYSTEMS, INC. upon request.

Rev.	Date	DESCRIPTION	By
10			
9			
8			
7			
6			
5			
4			
3			
2			
1	04/15/2016	MK 901 BAR LENGTH	AK

REVISIONS

This drawing is based upon information provided from the following documents and/or sources:
Engineer: STANTEC CONSULTING SERVICES, INC.
Project No:
Drawings: PROJECT PLANS
Specifications:
Other Sources:

Concrete Systems Inc.
9 Commercial St., Hudson, NH,03051
Phone 603-889-4163
Fax 603-889-2417

STATE AGENCY
VTrans Working to Get You There

Drawn By	Date
A KOSTENKO	04/04/2016
Reviewed By	Date
Approved By	Date

VTAOT PROJ. NO.: BRF 0151(21)

MILLER CONSTRUCTION, INC.
ROUTE 106 BRIDGE REPLACEMENT T.H. 61 (KENDALL ROAD)
WOODSTOCK, VT

D — Drawing No. SHOP DRAWING – AS5 — R-S22624-AS5 — REV 1

Quantity: | Project No: | SHEET AS5 OF

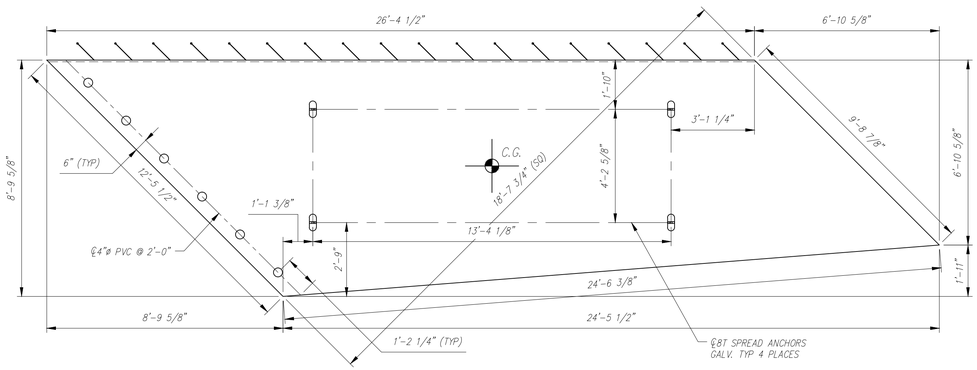

PLAN VIEW

SCALE: 3/8" = 1'-0"

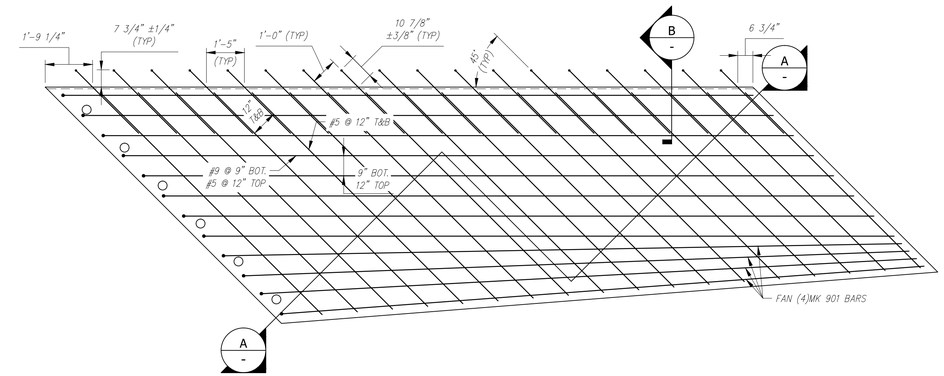

REINFORCING PLAN

SCALE: 3/8" = 1'-0"

BENDING SCHEDULE

SCALE: 1/4" = 1'-0"

AS6 - BILL OF MATERIALS / EMBEDS				
CSI ID#	DESCRIPTION	QTY	UM	COMMENTS
EM-00034	4" FOAM CORE PVC	8	FT	
EM-00039	SPREAD ANCHORS 8T GALV	4	EA	
RM-00016	REBAR #5 EPOXY- GR 60 40'	821	LB	
RM-00090	REBAR #9 EPOXY-GR 60	1125	LB	
MX-FA5000SC30	MIX DESIGN - FLY ASH 5000 SELF COMPACTIN	10.22	CY	

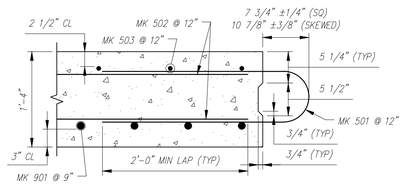

SECTION

SCALE: 1" = 1'-0"

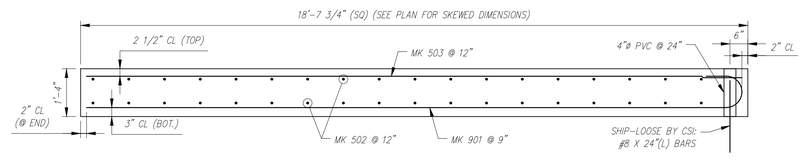

TYPICAL REINFORCING SECTION

SCALE: 1/2" = 1'-0"

ALL REBAR TO BE EPOXY COATED

AS6 Rebar Schedule				
MK		QTY	LENGTH	
501	#5	18	7 ' - 4 "	
502	#5	36	11 ' - 9 "	MAX
503	#5	9	25 ' - 9 "	MAX
901	#9	12	27 ' - 7 "	MAX

PIECE QUANTITY: 1 EACH
WEIGHT: 20.70 TONS

Contractor is to verify that all information shown on drawings has been thoroughly checked, complies with the contract documents and is adequate to meet the field conditions. Some dimensions and details may differ slightly from contract drawings to accommodate the manufacturing or design process. Approval of this drawing indicates that any deviation from the contract documents has been reviewed and found to be acceptable. Production will not commence until receipt of signed, approved shop drawings.

This drawing contains information proprietary to CONCRETE SYSTEMS, INC. This drawing is disclosed with the understanding that it will be retained in confidence and its use limited solely to the purpose for which it is disclosed. It is understood that no reproduction of this drawing is authorized without permission from CONCRETE SYSTEMS, INC. and that it will be returned to CONCRETE SYSTEMS, INC. upon request.

Rev.	Date	DESCRIPTION	By
10			
9			
8			
7			
6			
5			
4			
3			
2			
1	04/15/2016	MK 901 BAR LENGTH	AK

REVISIONS

This drawing is based upon information provided from the following documents and/or sources:
Engineer: STANTEC CONSULTING SERVICES, INC.
Project No:
Drawings: PROJECT PLANS
Specifications:
Other Sources:

Concrete Systems Inc.
9 Commercial St., Hudson, NH,03051
Phone 603-889-4163
Fax 603-889-2417

STATE AGENCY
VTrans Working to Get You There

Drawn By: A KOSTENKO — Date: 04/04/2016
Reviewed By — Date
Approved By — Date

VTAOT PROJ. NO.: BRF 0151(21)

MILLER CONSTRUCTION, INC.
ROUTE 106 BRIDGE REPLACEMENT T.H. 61 (KENDALL ROAD)
WOODSTOCK, VT

D — SHOP DRAWING – AS6 — REV 1
Drawing No. R-S22624-AS6
Quantity: — Project No: — SHEET AS6 OF