THE SCALE AND RESOLUTION OF THESE PLANS HAVE MADE THIS REVIEW DIFFICULT

AP SLAB ENDS HERE. SEE REVISED ABUT DRAWINGS

PLEASE PROVIDE CORNER DETAIL

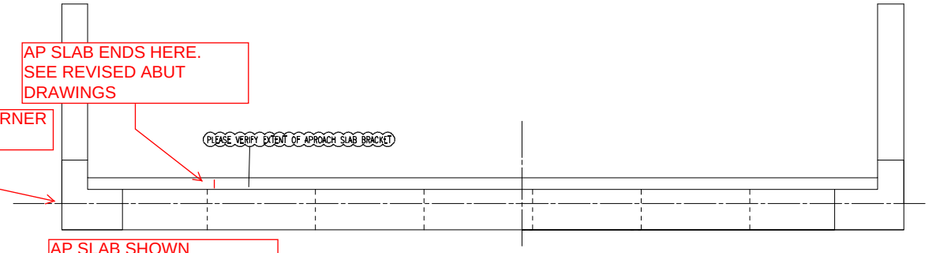

ABUTMENT #1 PLAN

AP SLAB SHOWN CORRECT IN THIS VIEW

EF

EF

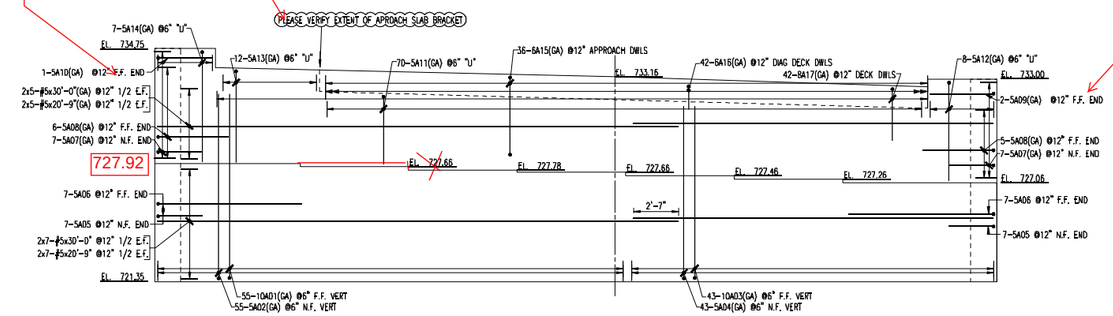

ABUTMENT #1 ELEVATION

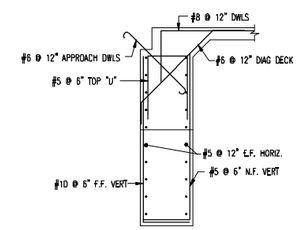

ABUTMENT TYPICAL REINF

SEE ATTACHED SCHEDULE

Drawing Sheet: R01							BAR LIST											
Bar Mark	Qty.	Size	Total Length	Type	'A'	'B'	'C'	'D'	'E'	'F'	'G'	'H'	'J'	'K'	'L'	'M'	'N'
10A01	55	#10	13'-3.X"	17		2'-8"	10'-3 X"										
5A02	55	#5	13'-3.X"	17		2'-8"	10'-3 X"										
10A03	43	#10	12'-2"	17		2'-8"	9'-11 X"										
5A04	43	#5	12'-2"	17		2'-8"	9'-11 X"										
5A05	14	#5	3'-5"	2	10"	2'-7"											
5A06	14	#5	9'-2"	2	10"	8'-4"											
5A07	14	#5	3'-5"	2	10"	2'-7"											
5A08	11	#5	4'-11"	2	10"	4'-1"											
5A09	2	#5	4'-6"	2	10"	3'-8"											
5A10	1	#5	4'-0"	2	10"	3'-2"											
5A11	70	#5	10'-6"	17		3'-11"	2'-8"	3'-11"									
5A12	8	#5	14'-0"	17		5'-8"	2'-8"	5'-8"									
5A13	12	#5	13'-2"	17		5'-2"	2'-8"	5'-3"									
5A14	7	#5	13'-4"	17		6'-4"	2'-8"	6'-4"									
6A15	36	#6	8'-0"	1	9"	4'-6"						9"		8"			
6A16	42	#6	8'-8"	22			1'-10"	5'-8.X"	1'-4"				1'-4"		11.X"	7'-8.X"	
6A17	42	#8	34'-6"	17		3'-8"	31'-6"										
5A18	4	#5	9'-1.X"	17		1'-2"	7'-11.X"										
A19a	2	#5	3'-6"	17		1'-2"	2'-4"										
A19c	2	#5	8'-8"	17		1'-2"	7'-8"										
First and Last Bar in Vary Group Shown Only																	
5A20	2	#5	9'-8"	3		8'-10.X"	10"						1.X"		10"	8'-8.X"	
5A21	2	#5	11'-3.X"	3		10'-6.X"	9.X"						5.X"		7.X"	11'-1.X"	
6A22	22	#6	8'-4"	17		2'-7"	1'-2"	2'-7"									
5A23	38	#5	2'-1.X"	T9	5.X"	1'-2"						8"					
5A24	2	#5	14'-5.X"	3		10'-8"	3'-9.X"						2'-1.X"		3'-1.X"	12'-9.X"	
5A25	2	#5	13'-8"	3		8'-10.X"	5'-10"						3.X"		3'-9.X"	13'-8"	
5A26	4	#5	13'-5"	17		1'-2"	12'-3"										
A27a	2	#5	8'-11.X"	17		1'-2"	5'-9.X"										
A27c	2	#5	12'-10"	17		1'-2"	11'-8.X"										
First and Last Bar in Vary Group Shown Only																	
A28a	6	#5	3'-1"			3'-1"											
A28c	6	#5	3'-8"			3'-8"											
First and Last Bar in Vary Group Shown Only																	

REBAR BELOW THE BRIDGE SEATS IS LEVEL I UNLESS IT EXTENDS ABOVE THE BRIDGE SEAT AND THEREFORE LEVEL II

#5

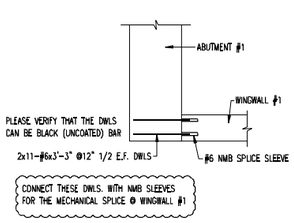

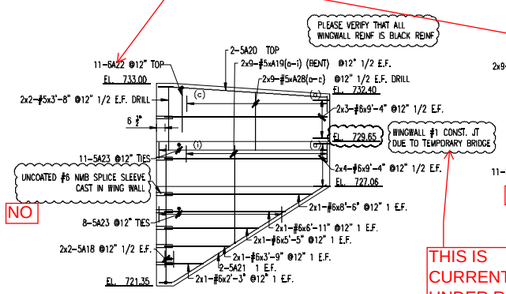

WINGWALL #1 ELEVATION

THIS IS CURRENTLY UNDER REVIEW

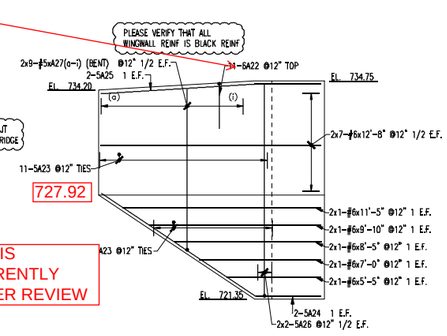

WINGWALL #2 ELEVATION

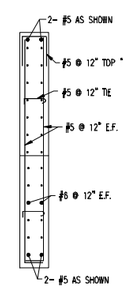

WINGWALL TYPICAL SECTION

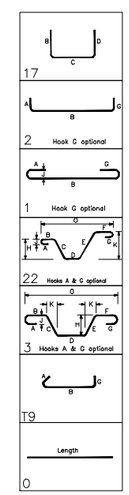

Vermont Agency of Transportation
RECEIVED
Jamaica ER-BRF 013-1 (23) - RSS Resub 4-16-2013.pdf

CK'D BY KF/JG OK'D BY JS

March 28, 2013

RESUBMIT YES Rejected
BY KMH DATE 04/16/13

ENG. AND ARCH. PLEASE VERIFY ALL CLOUDED AREAS

ALL BARS IN WINGWALL SHALL HAVE A 3" CLEAR. ONLY FF WILL HAVE A 2" CLEAR. PLEASE REVISE ALL APPRIATE BARS

NOTE: ANYTHING LABELED (GA) IS DUAL COATED REBAR

LAP CHART-U.N.O.

SIZE	TOP BARS *	OTHER BARS
#11		
#10		
#9		
#8		
#7		
#6		
#5	2'-2"	
#4		
#3		

* -Top bars are horiz. bars with more than 12" of concrete cast below the bars.

No.	Description	Date	By
1	APPROVAL/ ADDED SPLICE	3-27-13	TRH
	APPROVAL	3-21-13	

Revisions and Issue Record

The full intent and purpose of this drawing is the placing of reinforcing steel bars ONLY. It is NOT to be used as a means of communication between the Architect, Engineer, Contractor or any other Sub-trades.

THIS DRAWING IS NOT TO BE SCALED.

BARKER STEEL LLC a Harris Rebar company
DETAILED AT: CANAAN NEW HAMPSHIRE

Project: BRIDGE REP-CHANNEL WORK ER JAMAICA

Drawing: ABUMENT "1" REINF

Customer: MILLER CONSTRUCTION

Engineer:

Refer to Release:

Date	Drawn	Chkd.	JOB No.	Dwg. No.
3-11-13	TRH		10049445	R01

W:\thill\Projects\10049445\Placing Drawings\DWGs\R01.dwg

ABUTMENT #1

* DIMENSIONS SHOULD BE BASED ON 3" CLEAR NF AND 2" FF AS SHOWN IN THE CONTRACT PLANS

Drawing Sheet : RD1

BAR LIST

Bar Mark	Qty	Size	Total Length	Type	'A'	'B'	'C'	'D'	'E'	'F'	'G'	'H'	'J'	'K'	'O'	'R'
10A01	55	#10	13'-3 3/8"	17		* 2'-8"	10'-7 3/4"									
5A02	55	#5	13'-3 3/8"	17		* 2'-8"	10'-7 3/4"									
10A03	43	#10	12'-7"	17		* 2'-8"	9'-11 3/4"									
5A04	43	#5	12'-7"	17		* 2'-8"	9'-11 3/4"									
5A05	14	#5	3'-5"	2	10"	2'-7"										
5A06	14	#5	9'-2"	2	10"	8'-4"										
5A07	14	#5	3'-5"	2	10"	2'-7"										
5A08	11	#5	4'-11"	2	10"	4'-1"										
5A09	2	#5	4'-6"	2	10"	3'-8"										
5A10	1	#5	4'-0"	2	10"	3'-2"										
5A11	70	#5	10'-6"	17		3'-11"	* 2'-8"	3'-11"								
5A12	8	#5	14'-0"	17		5'-8"	* 2'-8"	5'-8"								
5A13	12	#5	13'-2"	17		5'-3"	* 2'-8"	5'-3"								
5A14	7	#5	15'-4"	17		6'-4"	* 2'-8"	6'-4"								
6A15	36	#6	6'-0"	1	9"	4'-6"					9"		6"			
6A16	42	#6	8'-8"	22			1'-10"	5'-6 3/4"	1'-4"			1'-4"		11 3/4"	7'-8 3/4"	
8A17	42	#8	34'-6"	17		3'-0"	31'-6"									
5A18	4	#5	9'-1 3/8"	17		* 1'-2"	7'-11 3/4"									
A19a	2	#5	3'-6"	17		* 1'-2"	2'-4"									
A19i	2	#5	8'-8"	17		* 1'-2"	7'-6"									
First and Last Bar in Vary Group Shown Only																
5A20	2	#5	9'-8"	3		8'-10 3/4"	10"					1 3/4"		10"	9'-8 3/4"	
5A21	2	#5	11'-3 3/8"	3		10'-6 3/4"	9 3/4"					5 3/4"		7 3/8"	11'-1 3/4"	
6A22	22	#6	6'-4"	17		2'-7"	1'-2"	2'-7"								
5A23	38	#5	2'-1 3/8"	T9	5 3/8"	* 1'-2"					6"					
5A24	2	#5	14'-5 3/8"	3		10'-8"	3'-9 3/4"					2'-1 3/4"		3'-1 3/8"	13'-9 3/4"	
5A25	2	#5	12'-8"	3		8'-10 3/4"	3'-10"					3 3/4"		3'-9 3/4"	12'-8"	
5A26	4	#5	13'-5"	17		* 1'-2"	12'-3"									
A27a	2	#5	6'-11 3/8"	17		* 1'-2"	5'-9 3/4"									
A27i	2	#5	12'-10"	17		* 1'-2"	11'-8 3/4"									
First and Last Bar in Vary Group Shown Only																
A28a	6	#5	3'-1"			3'-1"										
A28e	6	#5	3'-6"			3'-6"										
First and Last Bar in Vary Group Shown Only																

VERIFY LENGTH. CUT TO FIT?

RESOLUTION OF PLANS WAS REALLY HARD TO READ FRACTIONS

UPDATE #

DIMENSION USING 3" CLEAR

VERIFY

1'-10" TYP

PLANS CALL FOR #5 BAR

ALL BARS IN WINGWALL SHALL HAVE A 3" CLEAR. ONLY FF WILL HAVE A 2" CLEAR. PLEASE REVISE

AP SLAB ENDS HERE.
SEE REVISED ABUT
DRAWINGS

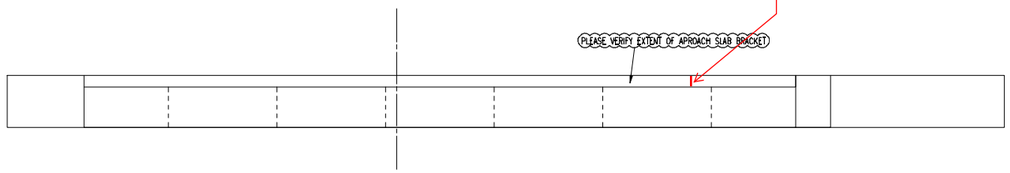

ABUTMENT 2 PLAN

AP SLAB SHOWN CORRECT
IN THIS VIEW

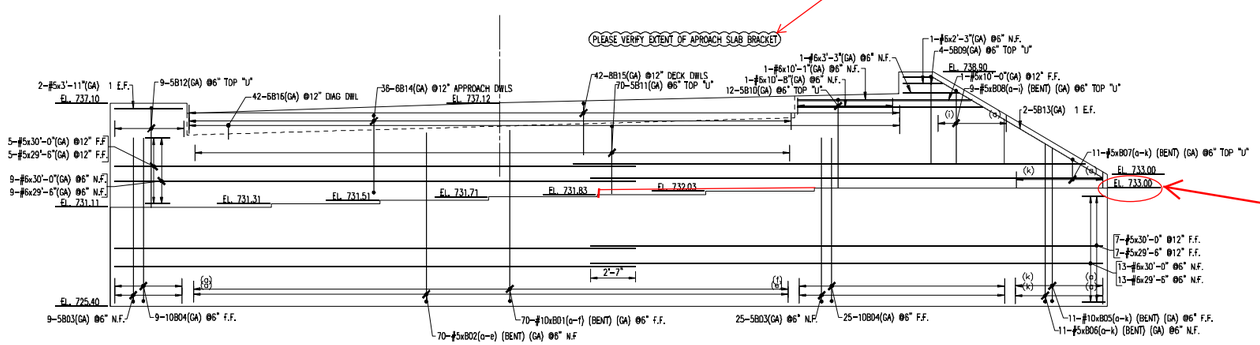

ABUTMENT 2 ELEVATION

EL 731.97
SEE ATTACHED REVISED ABUT
DRAWINGS

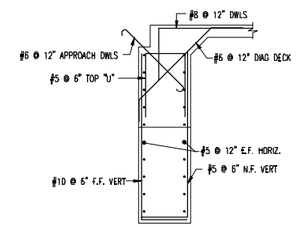

ABUTMENT TYPICAL REINF

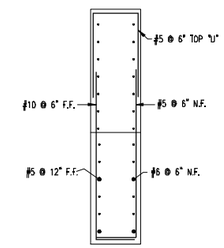

WINGWALL TYPICAL SECTION

SEE ATTACHED
SCHEDULE

Drawing Sheet : R02 — BAR LIST

Bar Mark	Qty	Size	Total Length	Type	"A"	"B"	"C"	"D"	"E"	"F"	"G"	"H"	"J"	"K"	"O"	"P"
B02a	14	#5	11'-11" A	17		2'-5"	9'-5"									
B02c	14	#5	12'-8" A	17		2'-5"	10'-2"									
First and Last Bar in Very Group Shown Only																
B06a	1	#5	8'-8 A"	17		2'-5"	7'-2 A"									
B06c	1	#5	10'-7 A"	17		2'-5"	10'-1 A"									
First and Last Bar in Very Group Shown Only																
B07a	1	#5	3'-10"	17		8"	2'-6"	8"								
B07c	1	#5	8'-6"	17		3'-5"	2'-6"	3'-5"								
First and Last Bar in Very Group Shown Only																
B08a	1	#5	7'-8"	17		2'-7"	2'-6"	2'-7"								
B08c	1	#5	12'-2"	17		4'-10"	2'-6"	4'-10"								
First and Last Bar in Very Group Shown Only																
5B03	34	#5	11'-11 A"	17		2'-5"	9'-5 A"									
5B09	4	#5	12'-4"	17		5'-0"	2'-6"	5'-0"								
5B10	12	#5	12'-8"	17		5'-1"	2'-6"	5'-1"								
5B11	70	#5	10'-4"	17		3'-11"	2'-6"	3'-11"								
5B12	9	#5	14'-0"	17		5'-0"	2'-6"	5'-0"								
5B13	2	#5	13'-4"	3		11'-4 A"	1'-8"					10 A"			1'-5"	12'-9 A"
6B14	36	#6	6'-9"	1	8"	4'-9"					8"			8"		
6B16	42	#6	8'-6 A"	22			1'-2 A"	5'-6 A"	1'-10"			10 A"			1'-4"	7'-7"
8B15	42	#8	34'-3"	17		3'-0"	31'-6									
B10a	13	#10	11'-11"	17		2'-5"	9'-5"									
B10d	5	#10	12'-10"	17		2'-5"	10'-4 A"									
First and Last Bar in Very Group Shown Only																
B10a	1	#10	8'-8 A"	17		2'-5"	7'-2 A"									
B10d	1	#10	12'-8"	17		2'-5"	10'-2"									
First and Last Bar in Very Group Shown Only																
10B04	34	#10	11'-11 A"	17		2'-5"	9'-5 A"									

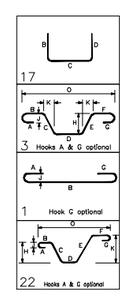

Vermont Agency of Transportation
RECEIVED
Jamaica ER-BRF 035-1 (23) - RSS Rehab 4-16-2013.pdf

CK'D BY KF/JG OK'D BY JS

March 28, 2013

RESUBMIT YES Rejected
BY KMH DATE 04/16/13

NOTE: ANYTHING LABELED (GA) IS DUAL COATED REBAR

LAP CHART-U.N.O.

SIZE	TOP BARS ★	OTHER BARS
#11		
#11C		
#9		
#8		
#7		
#6		
#5		
#4		
#3		

★ -Top bars are horiz. bars with more than 12" of concrete cast below the bars.

No.	Description	Date	By
D	APPROVAL	3-21-13	

Revisions and Issue Record

The full intent and purpose of this drawing is the placing of reinforcing steel bars ONLY. It is NOT to be used as a means of communication between the Architect, Engineer, Contractor or any other Sub-trades.

THIS DRAWING IS NOT TO BE SCALED.

BARKER STEEL LLC a Harris Rebar company
DETAILED AT: CANAAN NEW HAMPSHIRE

Project: BRIDGE REP-CHANNEL WORK ER JAMAICA

Drawing: ABUTMENT #2 REINF

Customer: MILLER CONSTRUCTION

Engineer:

Refer to Release:

Date	Drawn	Chkd.	JOB No.	Dwg. No.
3-11-13	TRH		10049445	R02

W:\bill\Projects\10049445\Placing Drawings\DWGs\R02.dwg

PLEASE BREAK OUT GROUP AND UPDATE QUANTITY

ABUTMENT #2

Drawing Sheet : R02

BAR LIST

Bar Mark	Qty	Size	Total Length	Type	'A'	'B'	'C'	'D'	'E'	'F'	'G'	'H'	'J'	'K'	'O'	'R'
B02a	14	#5	11'-11"	17		* 2'-6"	9'-5"									
B02e	14	#5	12'-8"	17		* 2'-6"	10'-2"									
First and Last Bar in Vary Group Shown Only																
B06a	1	#5	9'-8 ½"	17		* 2'-6"	7'-2 ½"									
B06k	1	#5	12'-7 ½"	17		* 2'-6"	10'-1 ½"									
First and Last Bar in Vary Group Shown Only																
B07a	1	#5	3'-10"	17		8"	* 2'-6"	8"								
B07k	1	#5	9'-6"	17		3'-6"	* 2'-6"	3'-6"								
First and Last Bar in Vary Group Shown Only																
B08a	1	#5	7'-8"	17		2'-7"	* 2'-6"	2'-7"								
B08k	1	#5	12'-2"	17		4'-10"	* 2'-6"	4'-10"								
First and Last Bar in Vary Group Shown Only																
5B03	34	#5	11'-11 ½"	17		2'-6"	9'-5 ½"									
5B09	4	#5	12'-6"	17		5'-0"	* 2'-6"	5'-0"								
5B10	12	#5	12'-8"	17		5'-1"	* 2'-6"	5'-1"								
5B11	70	#5	10'-4"	17		3'-11"	* 2'-6"	3'-11"								
5B12	9	#5	14'-0"	17		5'-9"	* 2'-6"	5'-9"								
5B13	2	#5	13'-½"	3		11'-4 ½"	1'-8"					10 ½"		1'-5"	12'-9 ½"	
6B14	36	#6	6'-0"	1	9"	4'-6"					9"		6"			
6B16	42	#6	8'-6 ½"	22			1'-2 ½"	5'-6 ½"	1'-10"			10 ½"		1'-4"	7'-7"	
8B15	42	#8	34'-6"	17		3'-0"	31'-6"									
B01a	15	#10	11'-11"	17		* 2'-6"	9'-5"									
B01l	15	#10	12'-10"	17		* 2'-6"	10'-4 ½"									
First and Last Bar in Vary Group Shown Only																
B05a	1	#10	9'-8 ½"	17		* 2'-6"	7'-2 ½"									
B05k	1	#10	12'-8"	17		* 2'-6"	10'-2"									
First and Last Bar in Vary Group Shown Only																
10B04	34	#10	11'-11 ½"	17		* 2'-6"	9'-5 ½"									

VERIFY LENGTH

*DIMENSIONS SHOULD BE BASED ON 3" CLEAR NF AND 2" CLEAR FF AS SHOWN IN CONTRACT PLANS

VERIFY LENGTH

THIS DIMENSION WILL VARY FROM WW4 TO WW3

VERIFY LENGTH

VERIFY USING 2" CLEAR ON FF ABUT AND 2 1/2" TOP CLEAR IN DECK

C & E DIMENSIONS ARE 1'-10" TYP

VERIFY LENGTH

THIS DIMENSION WILL VARY FROM WW4 TO WW3

SHOULDNT QUANTITY MATCH THE B02 SERIES

Vermont Agency of Transportation
RECEIVED
Jamaica ER-BRIF (15-1 (23)) - RSS Resub 4-16-2013.pdf

CK'D BY KF/JG OK'D BY JS
March 28, 2013
RESUBMIT YES Rejected
BY KMH DATE 04/16/13

ENG. AND ARCH. PLEASE VERIFY ALL CLOUDED AREAS

OK

VERIFY LENGTH

VERIFY LENGTHS OF ALL LONGITUDINAL BARS

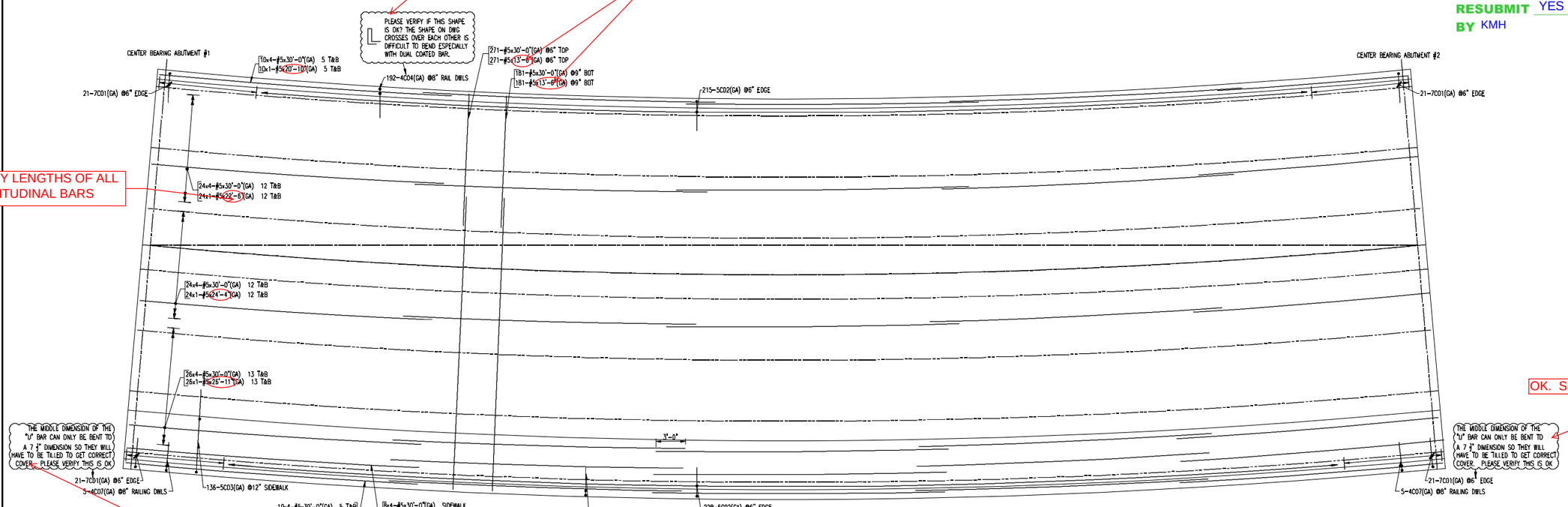

OK. SEE NOTE LEFT

OK. ADD NOTE STATING BARS WILL NEED TO BE TILTED UNTIL CLEAR IS MET

OK, SEE COMMENT ON NEXT SHEET

2 1/2" CLEAR TOP
1 1/2" CLEAR BOT

SEE ATTACHED RSS

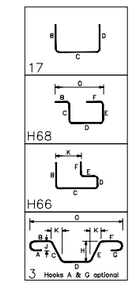

BAR LIST

Drawing Sheet : R03																
Bar Mark	Qty	Size	Total Length	Type	'A'	'B'	'C'	'D'	'E'	'F'	'G'	'H'	'I'	'J'	'K'	'X'
7C01	84	#7	8'-11.X"	17		3'-0"	7.X"	5'-4"								
5C02	443	#5	8'-6"	17		3'-0"	5"	5'-4"								
5C03	136	#5	13'-7.X"	H68		3'-6"	1'-6"	5'-5"	1'-4"	3'-4"					8'-5.X"	
4C04	192	#4	10'-1"	H66		2'-8"	2'-4"	8"	2'-3"	2'-8"				1.X"		
4C05	202	#4	12'-1"	H66		2'-8"	3'-4"	8"	3'-3"	2'-8"				1.X"		
4C06	364	#4	4'-1"	17		1'-9.X"	8"	1'-8.X"								
4C07	10	#4	8'-9"	H66		2'-8"	1'-10"	8"	1'-7"	2'-8"				1.X"		
4C08	30	#4	7'-2.X"	17		3'-3"	4.X"	3'-5"								
4C09	12	#4	7'-4"	17		3'-3"	8"	3'-5"								
4C10	26	#4	7'-5"	17		3'-3"	7"	3'-5"								
4C11	4	#4	5'-11"	17		2'-8"	7"	2'-8"								
4C12	4	#4	6'-2"	17		3'-8"	7"	3'-8"								
4C13	8	#4	6'-9"	3		4'-9"	2'-0"					18"		1'-8.X"	6'-6.X"	

VERIFY LENGTH

WHO WILL BE SUPPLYING REBAR AND CONNECTION PLATE FOR APPROACH RAIL? (TYP)

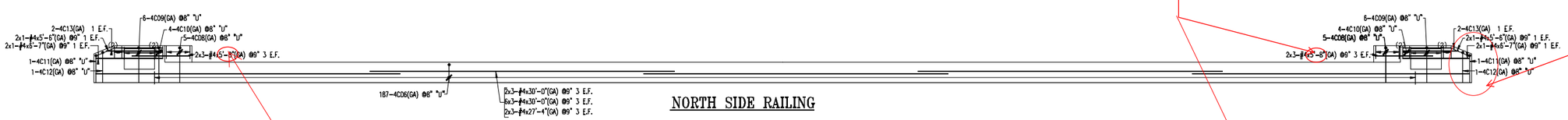

NORTH SIDE RAILING

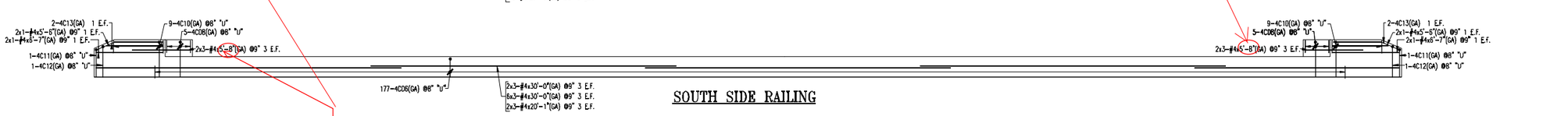

SOUTH SIDE RAILING

VERIFY LENGTH

NOTE: ANYTHING LABELED (GA) IS DUAL COATED REBAR

LAP CHART-U.N.O.

SIZE	TOP BARS ★	OTHER BARS
#11		
#10		
#9		
#8		
#7		
#6		
#5	36	
#4		
#3		

★ -Top bars are horiz. bars with more than 12" of concrete cast below the bars.

No.	Description	Date	By
D	APPROVAL	3-25-13	

Revisions and Issue Record

The full intent and purpose of this drawing is the placing of reinforcing steel bars ONLY. It is NOT to be used as a means of communication between the Architect, Engineer, Contractor or any other Sub-trades.

THIS DRAWING IS NOT TO BE SCALED.

BARKER STEEL LLC a Harris Rebar company
DETAILED AT CANAAN NEW HAMPSHIRE

Project: BRIDGE REP-CHANNEL WORK ER JAMAICA

Drawing: DECK REINF

Customer: MILLER CONSTRUCTION

Engineer:

Refer to Release:

Date	Drawn	Chkd.	JOB No.	Dwg. No.
3-21-13	TRH		10049445	R03

W:\bill\Projects\10049445\Placing Drawings\DWGs\R03.dwg

BARS WILL NEED TO BE TILTED UNTIL CLEAR IS MET

VERIFY AMOUNT

OF DECK

BOTTOM MAT OF DECK

3'-0" SPLICE

DETAIL BOTH BARS TO BOTTOM MAT

Drawing Sheet : R03

BAR LIST

Bar Mark	Qty	Size	Total Length	Type	'A'	'B'	'C'	'D'	'E'	'F'	'G'	'H'	'J'	'K'	'O'	'R'
7C01	84	#7	8'-11 ½"	17		3'-0"	7 ½"	5'-4"								
5C02	443	#5	8'-10"	17		3'-0"	6"	5'-4"								
5C03	136	#5	13'-7 ½"	H68		3'-½"	1'-½"	5'-6"	1'-½"	3'-0"					8'-5 ½"	
4C04	192	#4	10'-1"	H66		2'-6"	2'-4"	6"	2'-3"	2'-6"				1 ½"		
4C05	202	#4	12'-1"	H66		2'-6"	3'-4"	6"	3'-3"	2'-6"				1 ½"		
4C06	364	#4	4'-1"	17		1'-9 ½"	6"	1'-9 ½"								
4C07	10	#4	8'-9"	H66		2'-6"	1'-8"	6"	1'-7"	2'-6"				1 ½"		
4C08	30	#4	7'-2 ½"	17		3'-5"	4 ½"	3'-5"								
4C09	12	#4	7'-4"	17		3'-5"	6"	3'-5"								
4C10	26	#4	7'-5"	17		3'-5"	7"	3'-5"								
4C11	4	#4	5'-11"	17		2'-8"	7"	2'-8"								
4C12	4	#4	6'-7"	17		3'-0"	7"	3'-0"								
4C13	8	#4	6'-9"	3		4'-9"	2'-0"					10"		1'-9 ½"	6'-6 ½"	

DECK & RAIL

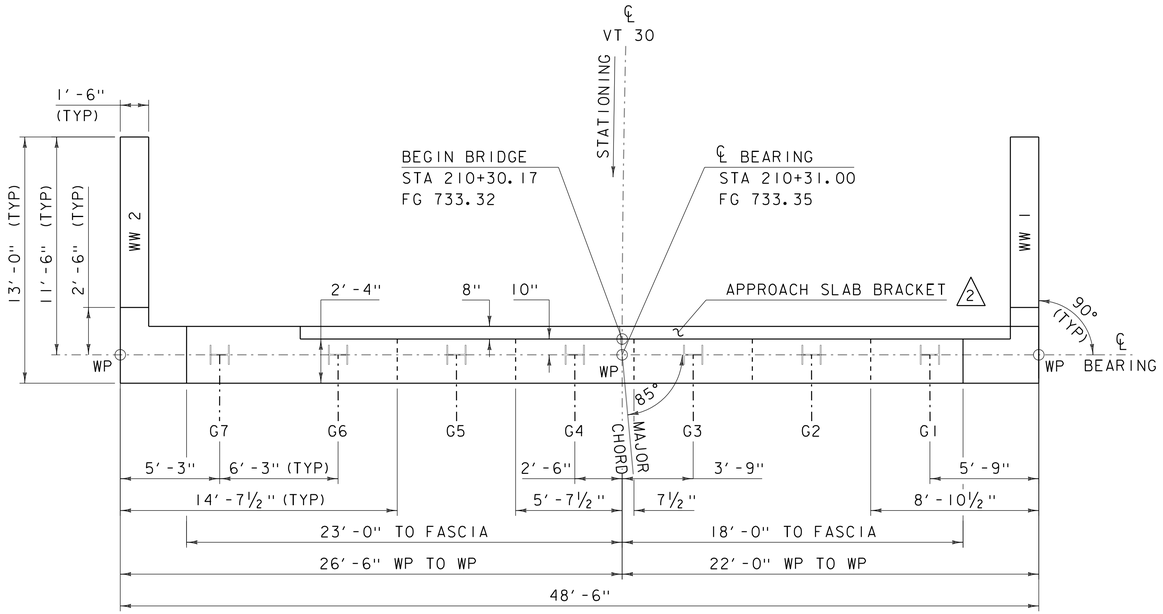

ABUTMENT 1 PLAN

SCALE ¼" = 1'-0"

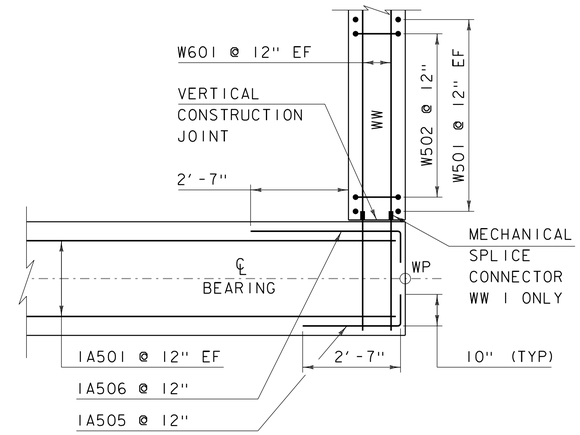

CORNER DETAIL ABOVE BRIDGE SEAT

SCALE ½" = 1'-0"

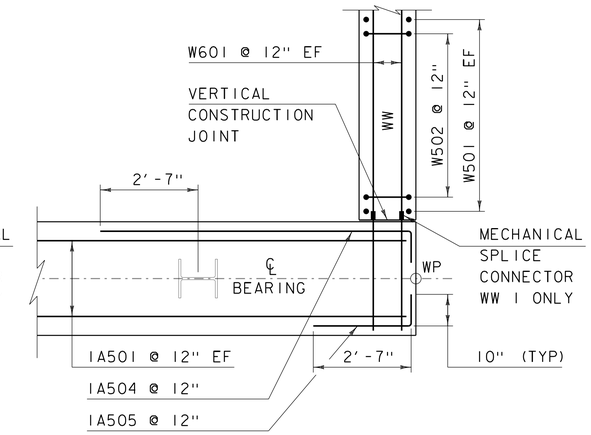

CORNER DETAIL BELOW BRIDGE SEAT

SCALE ½" = 1'-0"

1 REVISED 3-26-13

- REVISED BRIDGE SEAT ELEVATIONS FOR GIRDERS 6-7

2 REVISED 4-16-13

- REVISED APPROACH SLAB BRACKET WIDTH IN PLAN VIEW

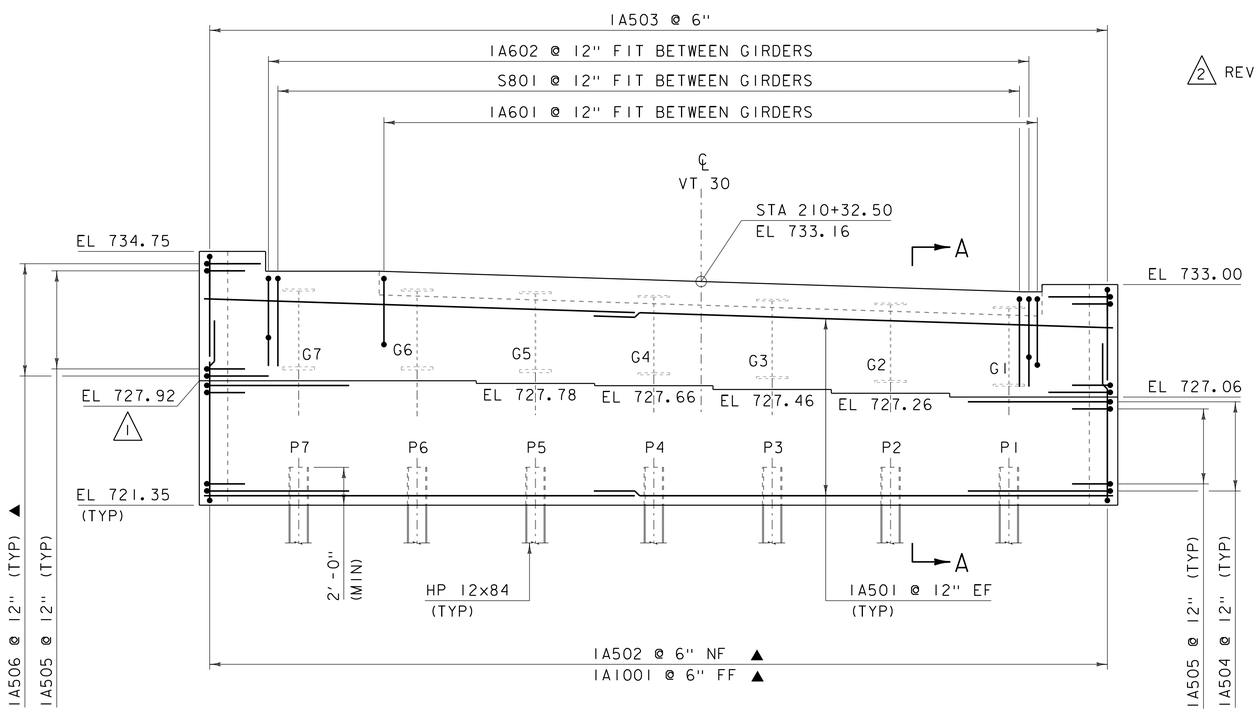

ABUTMENT 1 ELEVATION

SCALE ¼" = 1'-0"

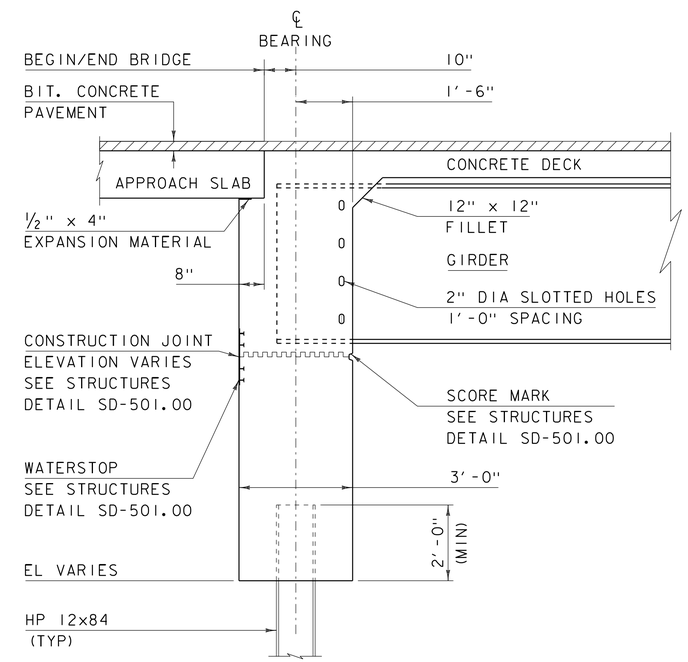

SECTION A-A
ABUTMENT TYPICAL SECTION

SCALE ½" = 1'-0"

NOTE:

NF = NEAR FACE
FF = FAR FACE
EF = EACH FACE
▲ = CUT TO FIT IN FIELD
3" CLEAR, UNLESS OTHERWISE SPECIFIED ON THE PLANS.
2'-7" BAR LAP UNLESS OTHERWISE SPECIFIED ON THE PLANS.

PROJECT NAME: JAMAICA	
PROJECT NUMBER: ER-BRF 015-1(23)	
FILE NAME: s11b316sub.dgn	PLOT DATE: 16-APR-2013
PROJECT LEADER: K. HIGGINS	DRAWN BY: K. FRIEDLAND
DESIGNED BY: G. LAROCHE	CHECKED BY: W. LAMMER
ABUTMENT 1	SHEET 39 OF 82

1 REVISED 3-26-13

- REVISED BRIDGE SEAT ELEVATIONS FOR GIRDERS 6-7

2 REVISED 4-16-13

- REVISED APPROACH SLAB BRACKET WIDTH IN PLAN VIEW

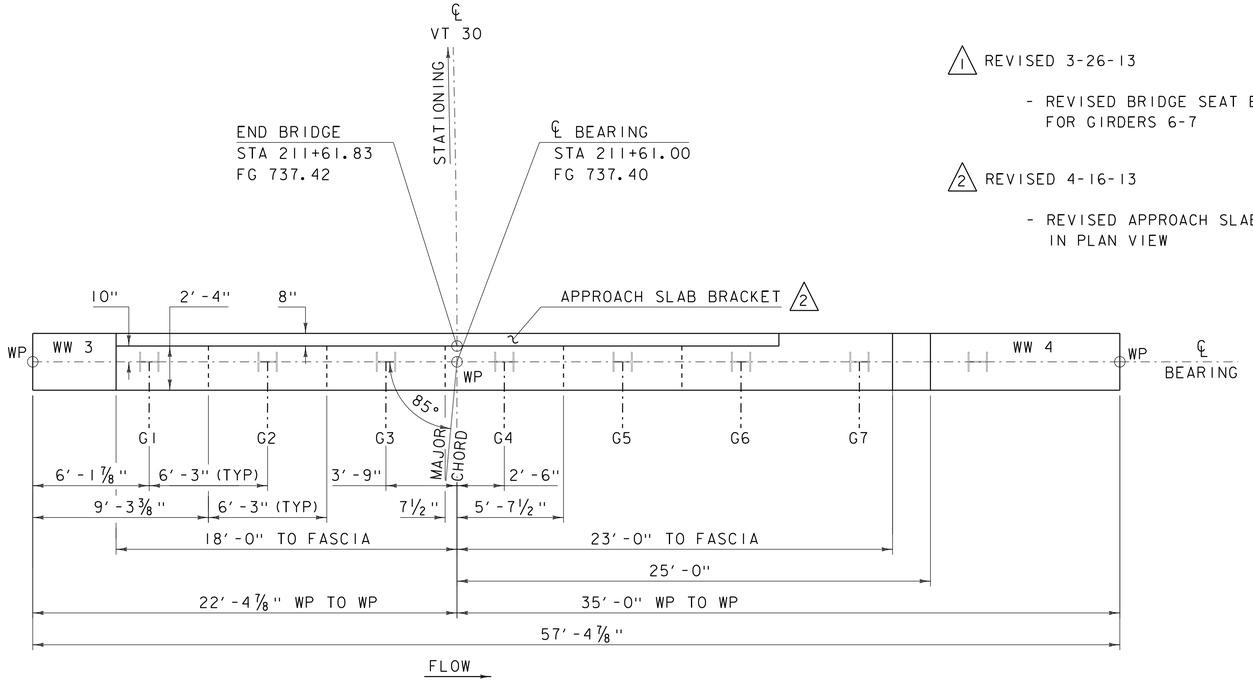

ABUTMENT 2 PLAN

SCALE 1/4" = 1'-0"

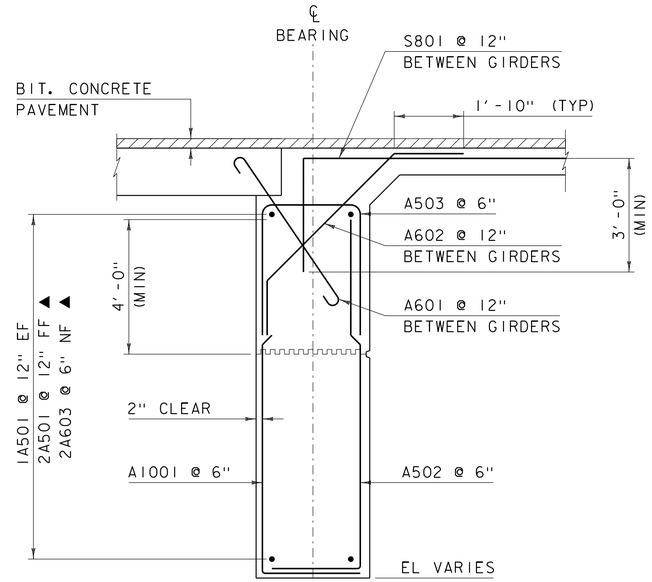

SECTION A-A
ABUTMENT REINFORCING TYPICAL

SCALE 1/2" = 1'-0"

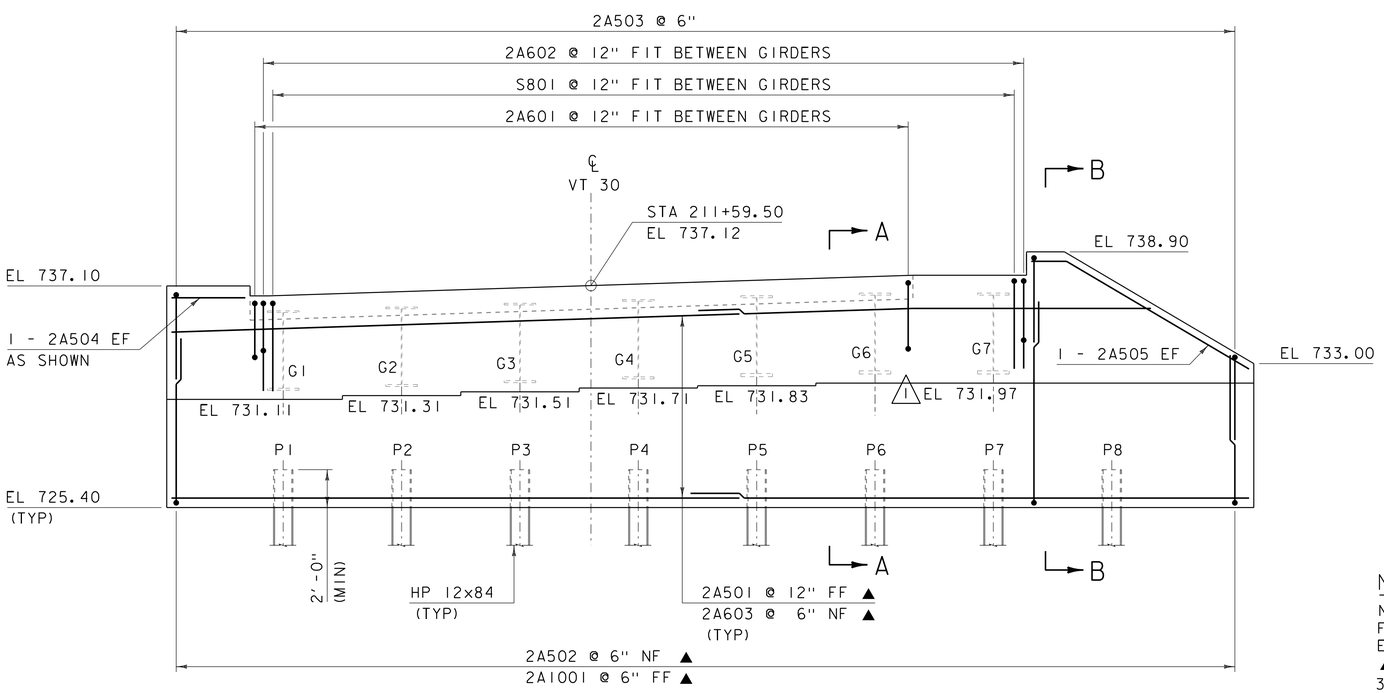

ABUTMENT 2 ELEVATION

SCALE 1/4" = 1'-0"

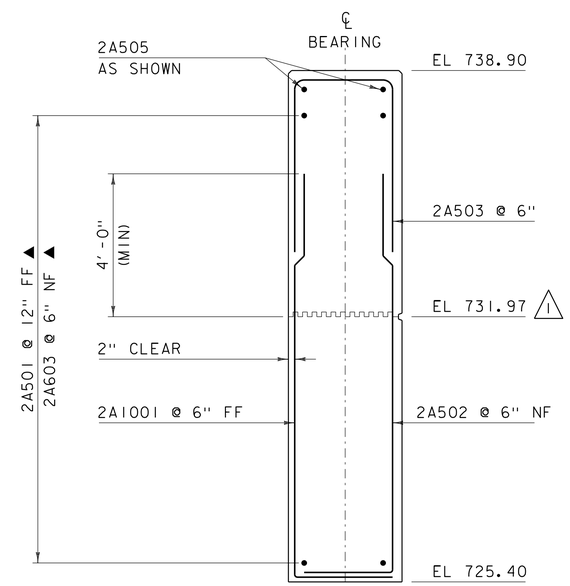

SECTION B-B
WINGWALL 4 REINFORCING TYPICAL

SCALE 1/2" = 1'-0"

NOTE:

NF = NEAR FACE
FF = FAR FACE
EF = EACH FACE
▲ = CUT TO FIT IN FIELD
3" CLEAR, UNLESS OTHERWISE SPECIFIED ON THE PLANS.
2'-7" BAR LAP UNLESS OTHERWISE SPECIFIED ON THE PLANS.

PROJECT NAME: JAMAICA	
PROJECT NUMBER: ER-BRF 015-1(23)	
FILE NAME: s11b316sub.dgn	PLOT DATE: 16-APR-2013
PROJECT LEADER: K. HIGGINS	DRAWN BY: K. FRIEDLAND
DESIGNED BY: G. LAROCHE	CHECKED BY: W. LAMMER
ABUTMENT 2	SHEET 40 OF 82

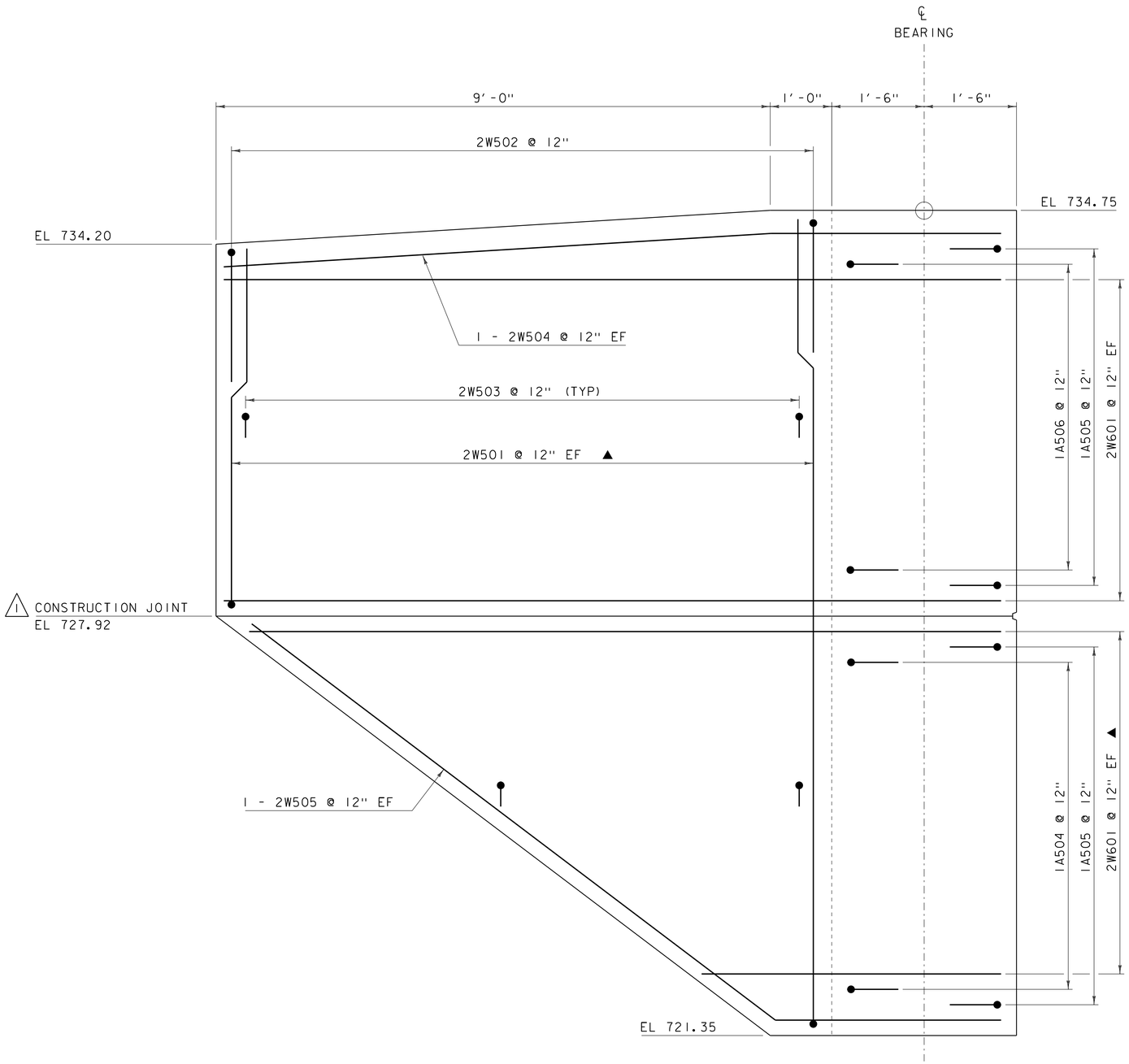

WINGWALL 2 ELEVATION

SCALE 1"=1'-0"

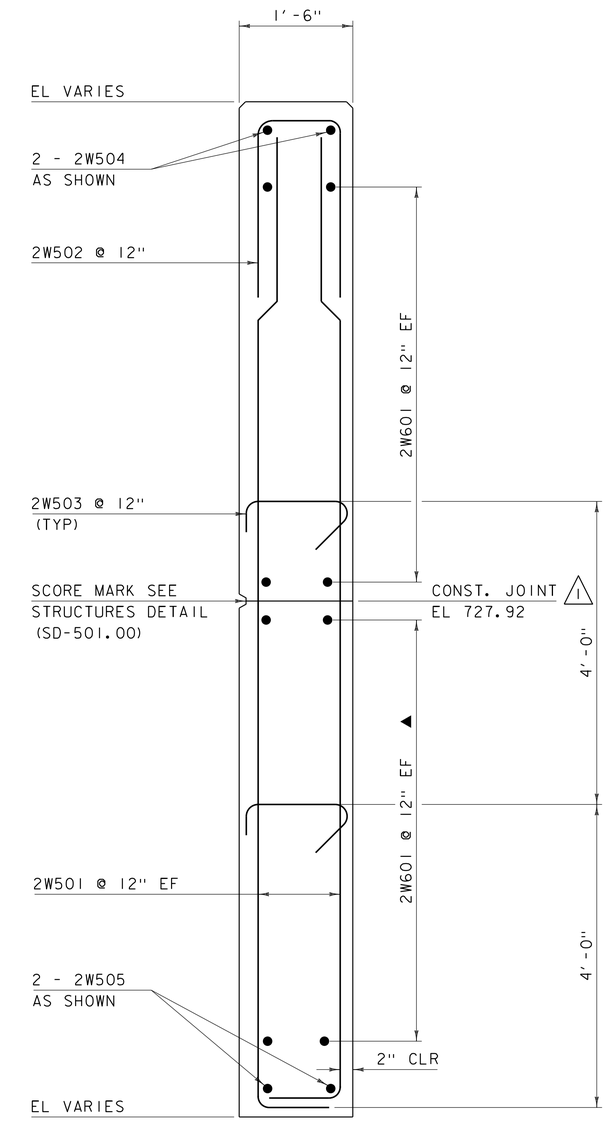

WINGWALL 2 TYPICAL SECTION

SCALE 1"=1'-0"

1 REVISED 3-26-13

- REVISED BRIDGE SEAT ELEVATIONS FOR GIRDERS 6-7

NOTE:

NF = NEAR FACE
FF = FAR FACE
EF = EACH FACE
▲ = CUT TO FIT IN FIELD
3" CLEAR, UNLESS OTHERWISE SPECIFIED ON THE PLANS.
2'-7" BAR LAP UNLESS OTHERWISE SPECIFIED ON THE PLANS.

PROJECT NAME: JAMAICA	
PROJECT NUMBER: ER-BRF 015-1(23)	
FILE NAME: sllb212sub.dgn	PLOT DATE: 26-MAR-2013
PROJECT LEADER: K. HIGGINS	DRAWN BY: K. FRIEDLAND
DESIGNED BY: G. LAROCHE	CHECKED BY: W. LAMMER
WINGWALL #2	SHEET 42 OF 82