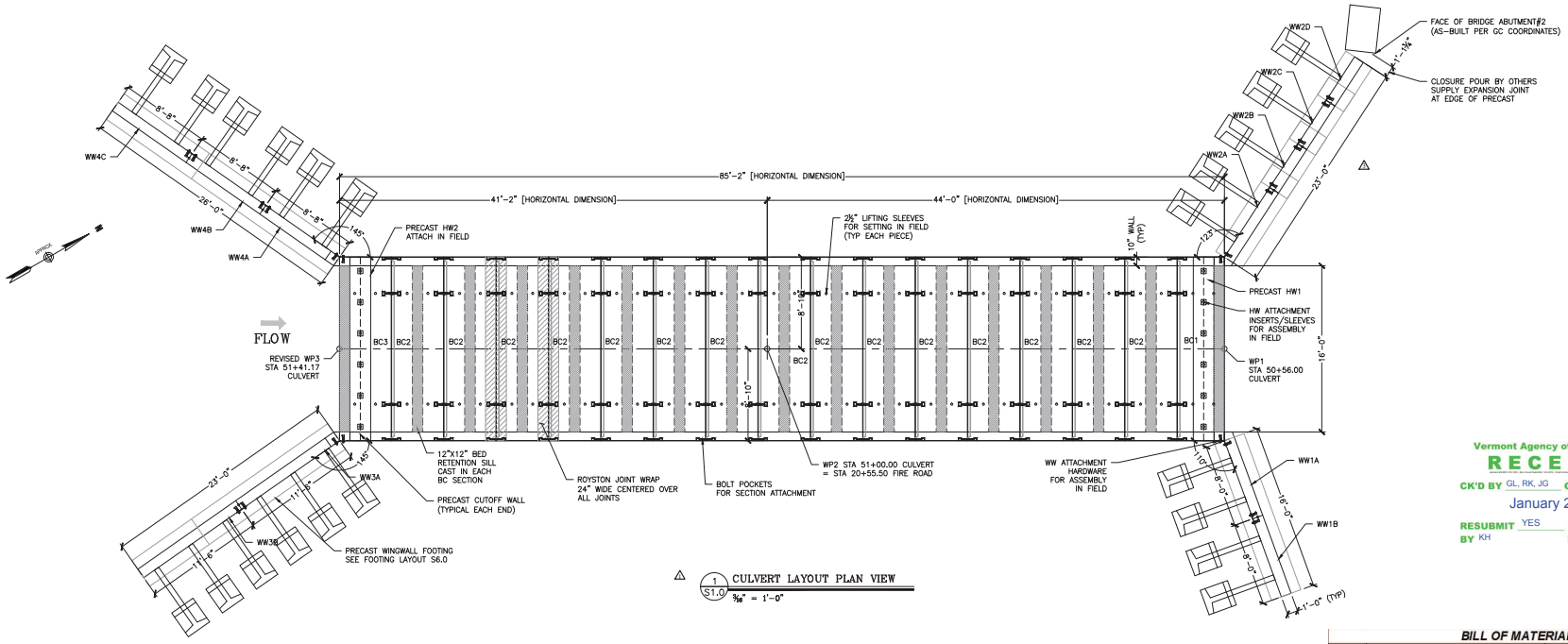

△ 1 S1.0 CULVERT LAYOUT PLAN VIEW

⅜" = 1'-0"

Vermont Agency of Transportation
RECEIVED
CK'D BY GL, RK, JG OK'D BY JS
January 27, 2014
RESUBMIT YES Rejected
BY KH DATE 2-18-2014

VERIFY QUANTITIES. QUANTITES ARE THE SAME AS PRIOR SUBMITTAL. THERE SHOULD BE ADDITIONAL ANCHORS, ETC REQUIRED FOR WW#2 CHANGE?

BILL OF MATERIALS

QTY	DESCRIPTION	IN STOCK	ORDERED FROM	DATE ORDERED	DATE DELIVERED
	ITEMS CAST-IN				
112	5 TON UTILITY ANCHOR				
24	RL-24 8 TON PLATE ANCHOR (7 1/4")				
34	1-8NC DOUBLE THREADED INSERTS				
	ITEMS FOR PRESHIPPING/PREP.				
880LF	1" CLOSED CELL NEOPRENE				
1 GAL	RED ADHESIVE				
6 GAL	VEXCON PENSEAL 244 WATER REPELLENT (900 SF APPROX COVERAGE AREA)				
	ITEMS TO SHIP TO THE JOB				
10	1/2" MILD STEEL 180d STEEL BRACKET				
4	1/2" MILD STEEL 145d STEEL BRACKET				
2	1/2" MILD STEEL 123d STEEL BRACKET				
2	1/2" MILD STEEL 110d STEEL BRACKET				
600LF	24" ROYSTON JOINT WRAP				
6 GAL	ROYBOND 740 ADHESIVE				
64	7/8"X18" GALV. THREADED ROD				
256	1"d X 1 1/2" X 1/8" GALV. WASHER				
128	7/8" GALV. NUT				
72	1"X5" NC THREAD ROD				
72	1" DIA NUT				

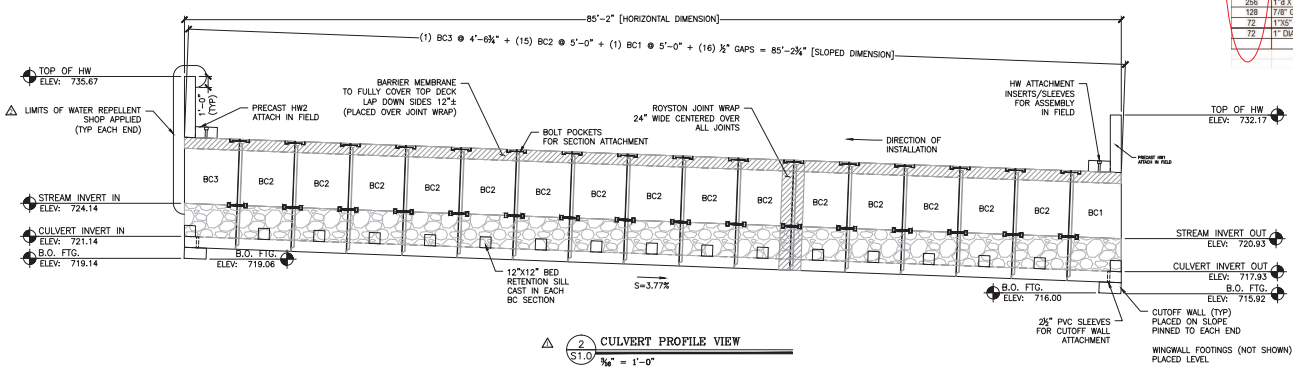

△ 2 S1.0 CULVERT PROFILE VIEW

⅜" = 1'-0"

MICHIE CORPORATION
APPROVED FOR
CONSTRUCTION

DATE: 9/4/2013
INITIAL: PJL

LIST OF SHEETS:
S1.0 – LAYOUT & PROFILE
S2.0 – ELEVATIONS & CONNECTION DETAILS
S3.0 – BC2 DETAILS
S4.0 – BC3 & HW2 DETAILS
S5.0 – BC1 & HW1 DETAILS
S6.0 – FOOTING DETAILS
S7.0 – WINGWALL 4 DETAILS
S8.0 – WINGWALL 3 DETAILS
S9.0 – WINGWALL 1 & WW2 DETAILS
S10.0 – WINGWALL ANCHOR DETAILS

No.	Revision	Date	By
△	Revised W/ VC		PJL
△	EOR Comments		PJL
△	EOR Comments		PJL

STATE OF VERMONT
PHILIP J. LAMOUNTAIN
NO. 8871
LICENSED
PROFESSIONAL ENGINEER
01/19/14

MICHIE CORPORATION, INC.
173 BUXTON INDUSTRIAL DRIVE-PO BOX 870
JOHNSON, VERMONT 05656
PHONE: 603-635-3218
FAX: 603-635-7426

Fire Drive off VT Rte. 30
VAOT #ER-BRF 015-1(23)
Jamaica, VT
16'x8' Box Culvert - Layout & Profile

Project No. 3745 | Designed by: PJL | Drawn by: PDH | Checked by: T-M | Scale: AS SHOWN

Prepared for:
Bazin Brothers Trucking
2425 Back Westminster Road
Westminster, VT 05158

DWG NO.
S1.0

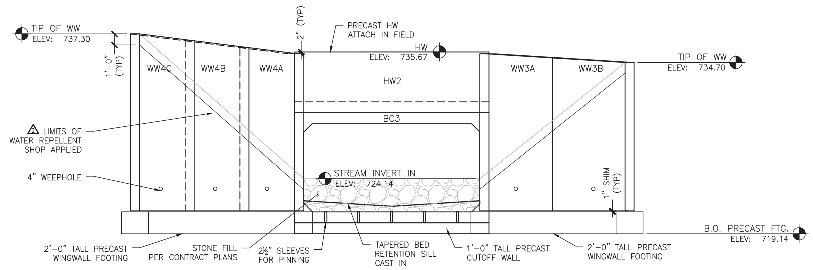

1 S2.0 UPSTREAM ELEVATION

3/16" = 1'-0"

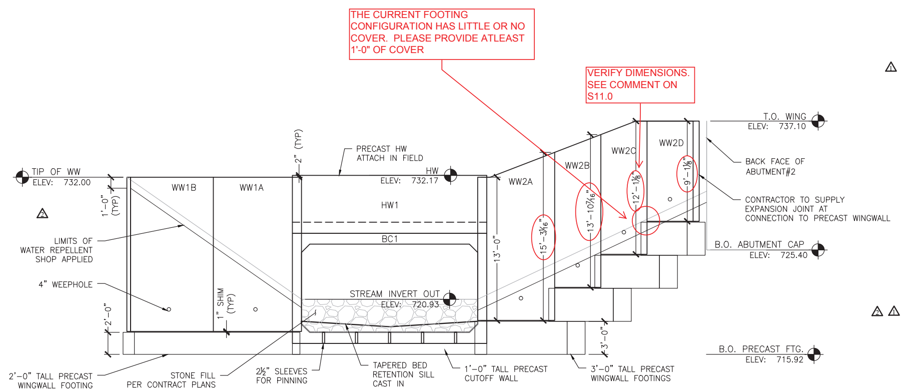

2 S2.0 DOWNSTREAM ELEVATION

3/16" = 1'-0"

GENERAL NOTES:

1. DO NOT SCALE FROM THE DRAWINGS. IF A REQUIRED DIMENSION IS NOT PROVIDED, CONSULT THE ENGINEER.

2. IF ANY OF THE WORK TO BE DONE AS SHOWN ON THE DRAWINGS DOES NOT CORRESPOND WITH THE EXISTING FIELD CONDITIONS, CONTACT THE ENGINEER PRIOR TO PROCEEDING WITH THE WORK IN QUESTION.

3. FIELD-VERIFY ALL ELEVATIONS PRIOR TO THE START OF CONSTRUCTION. IF THERE ARE ANY DISCREPANCIES, CONSULT THE ENGINEER PRIOR TO PROCEEDING WITH THE WORK IN QUESTION.

4. MAINTAIN MINIMUM 60 DEGREE SLING ANGLE WHEN HANDLING PRECAST COMPONENENTS.

5. PRECAST COMPONENTS SHALL ACHIEVE MINIMUM DESIGN COMPRESSIVE STRENGTH PRIOR TO SHIPPING, UNLESS OTHERWISE APPROVED BY THE ENGINEER. STRIPPING STRENGTH SHALL BE 3,000PSI

6. ALL HORIZONTAL SURFACE VOIDS SHALL BE FILLED WITH AN APPROVED NON-SHRINK GROUT. VERTICAL SURFACE VOIDS SHALL BE FILLED WITH FOAM SEALANT.

7. SHOP DRAWINGS WERE DEVELOPED USING THE FOLLOWING RESOURCES FOR THE CONTRACT: PROPOSED IMPROVEMENT BRIDGE PROJECT, TOWN OF JAMAICA, COUNTY OF WINDHAM, DATED 12/5/2012. PREPARED BY STATE OF VERMONT AGENCY OF TRANSPORTATION.

8. IF THERE IS ADDITIONAL INFORMATION PERTINENT TO THE FABRICATION AND INSTALLATION OF THESE UNITS THAT IS NOT CONTAINED WITHIN THE RESOURCES LISTED ABOVE IT SHALL BE BROUGHT TO THE ATTENTION OF MICHIE CORPORATION. FAILURE TO MAKE SUCH ADDITIONAL INFORMATION AVAILABLE SHALL RELIEVE MICHIE CORPORATION OF ALL LIABILITIES ARISING FROM ERRORS OR OMISSIONS RELATED TO THE OMITTED INFORMATION.

BOX CULVERT NOTES

1. BOX CULVERT SECTIONS ARE DESIGNED IN ACCORDANCE WITH
- AASHTO "LRFD BRIDGE DESIGN SPECIFICATIONS", 2012.
- VTRANS 2011 "STANDARD SPECIFICATIONS FOR CONSTRUCTION".

2. THE FOLLOWING CRITERIA WAS USED FOR DESIGN:
LIVE LOAD: HL-93
EARTH COVER: 3-7.5 FEET
BACKFILL SOIL UNIT WEIGHT: 140 PCF
NOMINAL BEARING RESISTANCE PER EMAIL CLARIFICATION 5/23/13 FOR EFFECTIVE FOOTING WIDTH OF 6FT:
6.2 KSF (SERVICE LIMIT STATE, RESISTANCE FACTOR = 1.0)
14.0 KSF (STRENGTH LIMIT STATE, RESISTANCE FACTOR = 0.45)
MIN LATERAL EARTH PRESSURE: 35 PSF
MAX LATERAL EARTH PRESSURE: 70 PSF

3. CONCRETE SHALL BE SELF-CONSOLIDATING CONFORMING TO ASTM C260 WITH A MINIMUM 28-DAY COMPRESSIVE STRENGTH OF 5,000 PSI. MIX DESIGN TO BE MICHIE #1953CAX. AGGREGATE SHALL CONFORM TO ASTM C-33 WITH A MAXIMUM DIAMETER OF 3/4". CEMENT SHALL CONFORM TO ASTM C150.

4. REINFORCING IN BOX CULVERT SHALL BE GRADE 60 DEFORMED BLACK BARS CONFORMING TO ASTM A-615. ALL BARS SHALL BE BENT COLD.

5. ALL EXPOSED EDGES EXCEPT WHERE NOTED SHALL BE CHAMFERED 3/4".

6. UNLESS OTHERWISE SPECIFIED IN THE CONTRACT DOCUMENTS, SUBGRADE PREPARATION SHALL CONFORM TO VTRANS 204.07 BEDDING FOR STRUCTURES. FOOTINGS SHALL BE PLACED AT ELEVATIONS SHOWN ON A MINIMUM OF 1'-0" OF CRUSHED STONE CONFORMING TO VTRANS 704.05(A). ALL TOPSOIL, LOOSE FILL, AND DELETERIOUS MATERIALS SHALL BE REMOVED BEFORE PLACING MATERIAL.

7. UNLESS OTHERWISE SPECIFIED IN THE CONTRACT DOCUMENTS, BACKFILL MATERIAL SHALL CONFORM TO VTRANS SECTION 704.08 GRANULAR BACKFILL FOR STRUCTURES. BACKFILL SHALL EXTEND FOR A MINIMUM DISTANCE OF 3'-0" BEYOND THE HORIZONTAL LIMITS OF THE STRUCTURE. PLACEMENT SHALL CONFORM TO VTRANS SECTION 204.08.

8. EXPOSED SURFACES SHALL BE COATED WITH VTRANS APPROVED WATER REPELLENT PER CONTRACT DOCUMENTS (SHOP APPLIED).

9. EACH SECTION SHALL BE PROVIDED WITH BOLT POCKETS FOR ATTACHMENT TO ADJACENT SECTIONS. 7/8" DIA. GALV. THREADED ROD, WASHERS AND NUTS SHALL BE PROVIDED FOR ASSEMBLY IN THE FIELD. CLOSED-CELL NEOPRENE JOINT SEALANT SHALL BE USED IN ALL JOINTS UNLESS NOTED OTHERWISE.

10. ROYSTON JOINT WRAP WITH ADHESIVE PROVIDED BY MICHIE CORP, INSTALLED BY OTHERS. BARRIER MEMBRANE PER CONTRACT DOCUMENTS.

WING WALL FOOTING NOTES:

1. CONCRETE SHALL BE SELF-CONSOLIDATING CONFORMING TO ASTM C260 WITH A MINIMUM 28-DAY COMPRESSIVE STRENGTH OF 5,000 PSI. MIX DESIGN TO BE MICHIE #1953CAX. AGGREGATE SHALL CONFORM TO ASTM C-33 WITH A MAXIMUM DIAMETER OF 3/4". CEMENT SHALL CONFORM TO ASTM C150.

2. REINFORCING SHALL BE GRADE 60 DEFORMED BLACK BARS CONFORMING TO ASTM A-615. ALL BARS SHALL BE BENT COLD.

3. ALL EXPOSED EDGES EXCEPT WHERE NOTED SHALL BE CHAMFERED 3/4".

4. UNLESS OTHERWISE SPECIFIED IN THE CONTRACT DOCUMENTS, SUBGRADE PREPARATION SHALL CONFORM TO VTRANS 204.07 BEDDING FOR STRUCTURES. FOOTINGS SHALL BE PLACED AT ELEVATIONS SHOWN ON A MINIMUM OF 1'-0" OF CRUSHED STONE CONFORMING TO VTRANS 704.05(A). ALL TOPSOIL, LOOSE FILL, AND DELETERIOUS MATERIALS SHALL BE REMOVED BEFORE PLACING BACKFILL.

5. UNLESS OTHERWISE SPECIFIED IN THE CONTRACT DOCUMENTS, BACKFILL MATERIAL SHALL CONFORM TO VTRANS SECTION 704.08 GRANULAR BACKFILL FOR STRUCTURES. PLACEMENT SHALL CONFORM TO VTRANS SECTION 204.08.

WING WALL PANEL AND ANCHOR NOTES:

1. SECTIONS ARE DESIGNED IN ACCORDANCE WITH
- AASHTO "LRFD BRIDGE DESIGN SPECIFICATIONS", 2012
- VTRANS 2011 "STANDARD SPECIFICATIONS FOR CONSTRUCTION".

2. THE FOLLOWING PROPERTIES WERE USED IN THE DESIGN:

	SOIL WEIGHT [PCF]	FRICTION ANGLE [DEG]
RETAINED SOIL	140	34
FOUNDATION SOIL	140	35

3. CONCRETE SHALL BE SELF-CONSOLIDATING CONFORMING TO ASTM C260 WITH A MINIMUM 28-DAY COMPRESSIVE STRENGTH OF 5,000 PSI. MIX DESIGN TO BE MICHIE #1953CAD WITH DCI CORROSION INHIBITOR. AGGREGATE SHALL CONFORM TO ASTM C-33 WITH A MAXIMUM DIAMETER OF 3/4". CEMENT SHALL CONFORM TO ASTM C150.

4. REINFORCING IN WINGWALLS SHALL BE EPOXY COATED REINFORCING CONFORMING TO VTRANS SECTION 507. CHAIRS, SPACERS, AND TIES IN AREAS OF EPOXY COATEDREINFORCING SHALL BE PLASTIC OR EPOXY COATED. ALL BARS SHALL BE ALL BARS SHALL BE BENT COLD.

5. ALL EXPOSED EDGES EXCEPT WHERE NOTED SHALL BE CHAMFERED 3/4".

6. UNLESS OTHERWISE SPECIFIED IN THE CONTRACT DOCUMENTS, BACKFILL MATERIAL SHALL CONFORM TO VTRANS SECTION 704.08 GRANULAR BACKFILL FOR STRUCTURES. PLACEMENT SHALL CONFORM TO VTRANS SECTION 204.08. SEE DETAIL 1/S10 FOR SELECT BACKFILL BEHIND WINGS FOR DRAINAGE.

7. EXPOSED SURFACES SHALL BE COATED WITH VTRANS APPROVED WATER REPELLENT PER CONTRACT DOCUMENTS (SHOP APPLIED).

HEADWALL NOTES:

1. PRECAST REINFORCED HEADWALLS ARE DESIGNED IN ACCORDANCE WITH AASHTO "LRFD BRIDGE DESIGN SPECIFICATIONS" 2012

2. THE FOLLOWING SOIL PROPERTIES WERE USED IN THE DESIGN:

	SOIL WEIGHT [PCF]	FRICTION ANGLE [DEG]
RETAINED SOIL	140	34
FOUNDATION		40

3. HEADWALL CONCRETE SHALL BE SELF-CONSOLIDATING CONFORMING TO ASTM C260 WITH A MINIMUM 28-DAY COMPRESSIVE STRENGTH OF 5,000 PSI. MIX DESIGN TO BE MICHIE #1953CAD WITH DCI CORROSION INHIBITOR. AGGREGATE SHALL CONFORM TO ASTM C-33 WITH A MAXIMUM DIAMETER OF 3/4". CEMENT SHALL CONFORM TO ASTM C150.

4. REINFORCING IN HEADWALLS SHALL BE EPOXY COATED REINFORCING CONFORMING TO VTRANS SECTION 507. CHAIRS, SPACERS, AND TIES IN AREAS OF EPOXY COATEDREINFORCING SHALL BE PLASTIC OR EPOXY COATED. ALL BARS SHALL BE BENT COLD.

5. ALL EXPOSED EDGES EXCEPT WHERE NOTED SHALL BE CHAMFERED 3/4".

6. UNLESS OTHERWISE SPECIFIED IN THE CONTRACT DOCUMENTS, BACKFILL MATERIAL SHALL CONFORM TO VTRANS SECTION 704.08 GRANULAR BACKFILL FOR STRUCTURES. PLACEMENT SHALL CONFORM TO VTRANS SECTION 204.08.

7. EXPOSED SURFACES SHALL BE COATED WITH VTRANS APPROVED WATER REPELLENT PER CONTRACT DOCUMENTS (SHOP APPLIED).

Vermont Agency of Transportation
RECEIVED
CK'D BY GL, RK, JG OK'D BY JS
January 27, 2014
RESUBMIT YES Rejected
BY KH DATE 2-18-2014

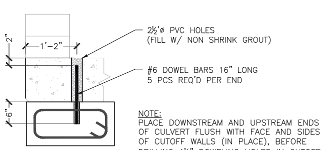

NOTE:
PLACE DOWNSTREAM AND UPSTREAM ENDS OF CULVERT FLUSH WITH FACE AND SIDES OF CUTOFF WALLS (IN PLACE), BEFORE DRILLING 1½" DOWELING HOLES IN CUTOFF WALLS. FILL HOLES WITH NON SHRINK GROUT AFTER INSTALLATION.

3 S2.0 CUTOFF WALL CONNECTION

3/4"= 1'

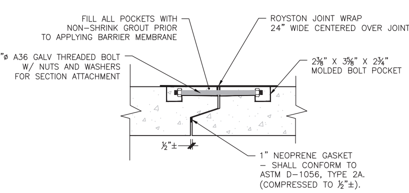

4 S2.0 BOX CULVERT JOINT CONNECTION DETAIL

1" = 1'-0"

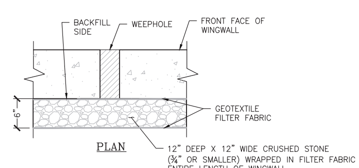

5 S2.0 WEEPHOLE BACKFILL DETAIL

1" = 1'-0"

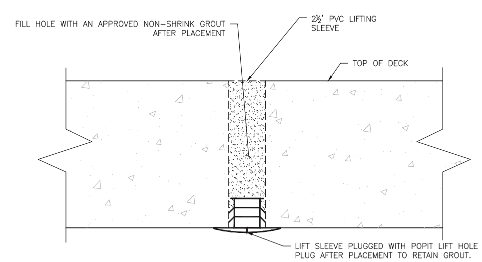

4 S1.0 PLUG DETAIL FOR PVC LIFTING SLEEVES

3" = 1'-0"

MICHIE CORPORATION APPROVED FOR CONSTRUCTION

DATE: 9/4/2013

INITIAL: PJL

No.	Date	Revision	By
1		Revised WW2	PJL
2		EOR Comments	PJL
3		EOR Comments	PJL

STATE OF VERMONT THOMAS A. FRENCH NO. 8871 Structural LICENSED PROFESSIONAL ENGINEER 01/19/14

MICHIE CORPORATION, INC.
173 BUXTON INDUSTRIAL DRIVE-PO BOX 870
HENNIKER, NH 03242
PHONE: 603-428-3218
FAX: 603-428-7426

Fire Drive off VT Rte. 30
VAOT #ER-BRF 015-1(23)
Jamaica, VT
16'x8' Box Culvert - Elevations & Connection Details

Project No. 3745 | Designed by: PJL | Drawn by: PDH | Checked by: TAF | Scale: AS SHOWN

Prepared for:
Bazin Brothers Trucking
2425 Back Westminster Road
Westminster, VT 05158

DWG NO.
S2.0

BC2 REINFORCING SCHEDULE (COUNTS REFLECT 1 UNIT)								
LOCATION	MARK	QTY	SIZE	SPACING	TYPE	CUT LENGTH	HORIZ. LEG	VERT. LEG
TOP SLAB (INT)	A100	10	#7	6"	STRAIGHT	17'-4"		
BOT. SLAB (INT)	A200	10	#7	6"	STRAIGHT	17'-4"		
TOP SLAB (EXT)	A300	5	#4	12"	STRAIGHT	17'-4"		
BOT. SLAB (EXT)	A400	5	#4	12"	STRAIGHT	17'-4"		
WALL (EXT)	A1	20	#6	6"	"U" BARS	18'-5" UNBENT		
WALL (INT)	B1	16	#5	8"	STRAIGHT	9'-8"		
LONGIT. TOP (EXT)	C1	18	#4	12"	STRAIGHT	4'-8½"		
LONGIT. TOP (INT)	C100	18	#4	12"	STRAIGHT	4'-8½"		
LONGIT. BOT. (INT)	C200	18	#4	12"	STRAIGHT	4'-8½"		
LONGIT. BOT. (EXT)	C1	18	#4	12"	STRAIGHT	4'-8½"		
LONGIT. WALL (EXT)	C1	16	#4	12"	STRAIGHT	4'-8½"		
LONGIT. WALL (INT)	C1	16	#4	12"	STRAIGHT	4'-8½"		

BC1 REINFORCING SCHEDULE (COUNTS REFLECT 1 UNIT)								
LOCATION	MARK	QTY	SIZE	SPACING	TYPE	CUT LENGTH	HORIZ. LEG	VERT. LEG
TOP SLAB (INT)	A100	10	#7	6"	STRAIGHT	17'-4"		
BOT. SLAB (INT)	A200	10	#7	6"	STRAIGHT	17'-4"		
TOP SLAB (EXT)	A300	5	#4	12"	STRAIGHT	17'-4"		
BOT. SLAB (EXT)	A400	5	#4	12"	STRAIGHT	17'-4"		
WALL (EXT)	A1	20	#6	6"	"U" BARS	18'-5" UNBENT		
WALL (INT)	B1	16	#5	8"	STRAIGHT	9'-8"		
LONGIT. TOP (EXT)	C1	18	#4	12"	STRAIGHT	4'-3¼"		
LONGIT. TOP (INT)	C100	18	#4	12"	STRAIGHT	4'-0¼"		
LONGIT. BOT. (INT)	C200	18	#4	12"	STRAIGHT	4'-4¾"		
LONGIT. BOT (EXT)	C1	18	#4	12"	STRAIGHT	4'-7¾"		
LONGIT. WALL (EXT)	C1	16	#4	12"	STRAIGHT	VARIES 4'-7¾" TO 4'-3¼"		
LONGIT. WALL (INT)	C1	16	#4	12"	STRAIGHT	VARIES 4'-4¾" TO 4'-0¼"		

BC3 REINFORCING SCHEDULE (COUNTS REFLECT 1 UNIT)								
LOCATION	MARK	QTY	SIZE	SPACING	TYPE	CUT LENGTH	HORIZ. LEG	VERT. LEG
TOP SLAB (INT)	A100	10	#7	6"	STRAIGHT	17'-4"		
BOT. SLAB (INT)	A200	10	#7	6"	STRAIGHT	17'-4"		
TOP SLAB (EXT)	A300	5	#4	12"	STRAIGHT	17'-4"		
BOT. SLAB (EXT)	A400	5	#4	12"	STRAIGHT	17'-4"		
WALL (EXT)	A1	20	#6	6"	"U" BARS	18'-5" UNBENT		
WALL (INT)	B1	16	#5	8"	STRAIGHT	9'-8"		
LONGIT. TOP (EXT)	C1	18	#4	12"	STRAIGHT	4'-8½"		
LONGIT. TOP (INT)	C100	18	#4	12"	STRAIGHT	4'-11½"		
LONGIT. BOT. (INT)	C200	18	#4	12"	STRAIGHT	4'-7"		
LONGIT. BOT (EXT)	C1	18	#4	12"	STRAIGHT	4'-4"		
LONGIT. WALL (EXT)	C1	16	#4	12"	STRAIGHT	VARIES 4'-8½" TO 4'-4"		
LONGIT. WALL (INT)	C1	16	#4	12"	STRAIGHT	VARIES 4'-11½" TO 4'-7"		

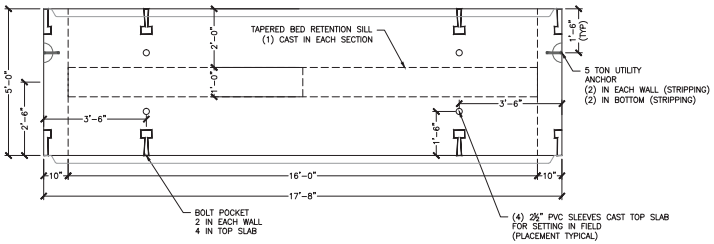

1 S3.0 BC2 PLAN VIEW
½" = 1'-0"

15 REQUIRED
ITEM 281608
UNIT WEIGHT AND VOLUME:40,500#
BC: (9.22CY)
BAFFLE: (0.42CY)

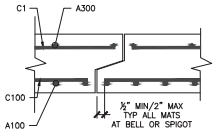

6 S3.0 REINFORCING AT JOINT
1" = 1'-0"

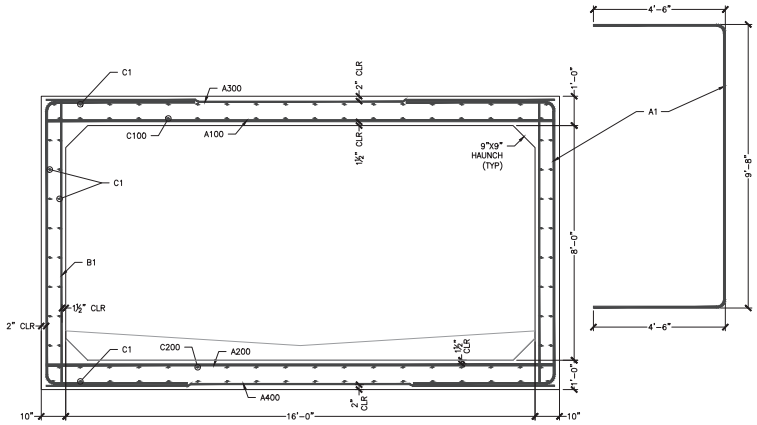

3 S3.0 BC TYPICAL REINFORCING
½" = 1'-0"

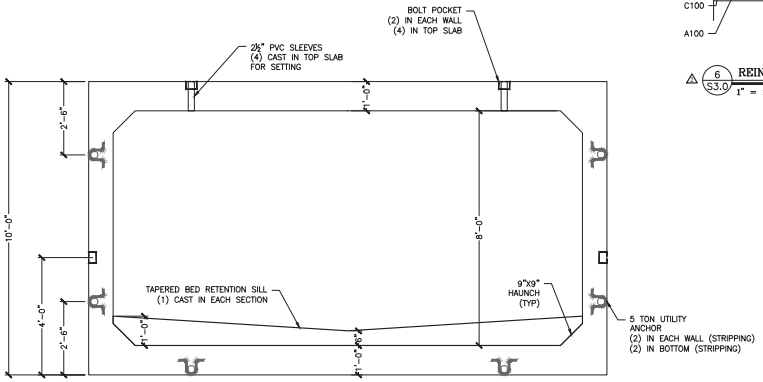

2 S3.0 BC2 ELEVATION
½" = 1'-0"

BAFFLE REINFORCING SCHEDULE (COUNTS REFLECT 1 UNIT)							
LOCATION	QTY	SIZE	SPACING	TYPE	CUT LENGTH	LAP
HORIZONTAL BAR	1	#4	–	STRAIGHT	14'-6"	18"
HORIZONTAL DOWELS	2	#4	–	STRAIGHT	26"	18"
VERTICAL DOWELS	10	#4	18"	STRAIGHT	7" TO 1'-0"	

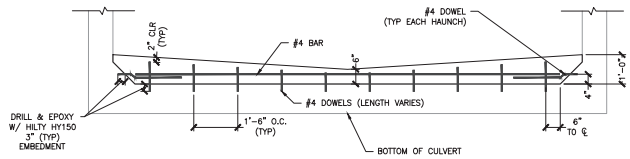

4 S3.0 BED RETENTION SILL (ELEVATION VIEW)
½" = 1'-0"

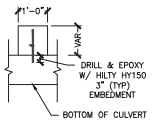

5 S3.0 CROSS SECTION BED RETENTION SILL
1/2" = 1'

Vermont Agency of Transportation
RECEIVED
CK'D BY GL, RK, JG OK'D BY JS
January 27, 2014
RESUBMIT YES Rejected
BY KH DATE 2-18-2014

MICHIE CORPORATION
APPROVED FOR
CONSTRUCTION
DATE: 9/4/2013
INITIAL: PJL

No.	Date	Revision	By

NOTE:
ADJUST REINFORCING SPACING AS REQUIRED TO AVOID INSERTS

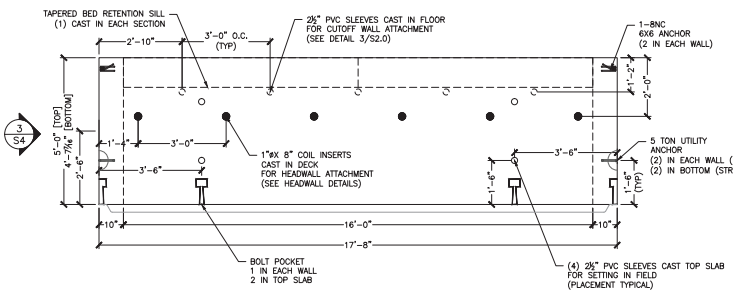

△ 1 S4.0 BC3 PLAN VIEW
½" = 1'-0"

1 REQUIRED
ITEM 281608 IO
UNIT WEIGHT AND VOLUME: 38,560#
BC: (8.76CY)
BAFFLE: (0.42CY)

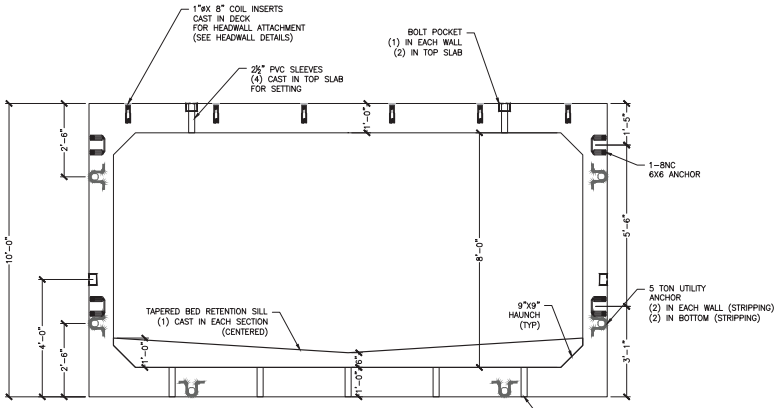

△ 2 S4.0 BC3 ELEVATION
½" = 1'-0"

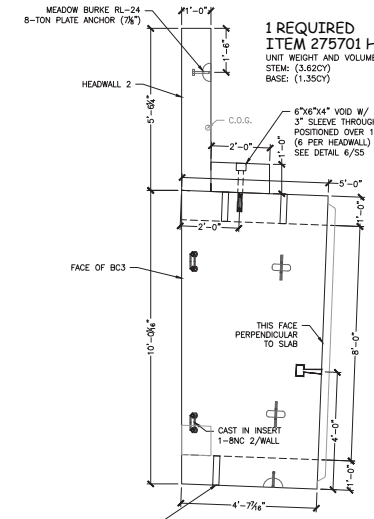

△ 3 S4.0 BC3 SIDE VIEW SHOWN W/ HEADWALL
½" = 1'-0"

1 REQUIRED
ITEM 275701 HW2
UNIT WEIGHT AND VOLUME: 20,875#
STEM: (3.62CY)
BASE: (1.35CY)

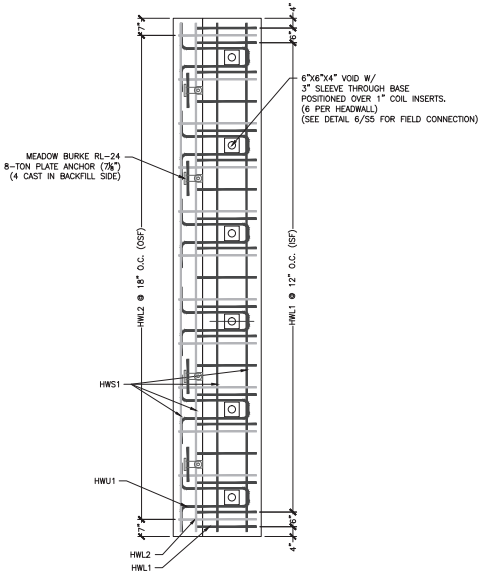

△ 4 S4.0 HW2 PLAN VIEW
½" = 1'-0"

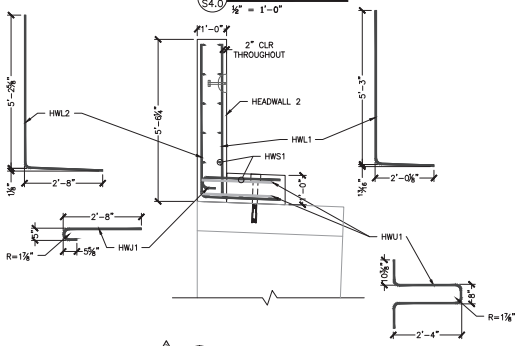

△ 5 S4.0 HW2 REINFORCING
½" = 1'-0"

△ ALL REINFORCING IN THIS DETAIL IS TO BE EPOXY COATED.
CHAIRS, SPACERS, AND TIES IN AREAS OF EPOXY COATED REINFORCING SHALL BE PLASTIC OR EPOXY COATED.

HEADWALL 3 REINFORCING SCHEDULE (COUNTS REFLECT 1 UNIT)

LOCATION	MARK	QTY	SIZE	SPACING	TYPE	CUT LENGTH	
VERTICAL ISF	HWL1	19	#5	12"	"L"	7'-1½"	
VERTICAL OSF	HWL2	12	#5	18"	"L"	7'-9¼"	
LONGITUDINAL (STEM)	HWS1	12	#5	12"	STRAIGHT	17'-4"	
BASE TOP MAT	HWU1	19	#5	12"	"U"	3'-3½"	
BASE AT SLEEVES	HWU1	6	#5	3'-0"	"U"	6'-7¾"	
LONGITUDINAL (BASE)	HWS1	4	#5	12"	STRAIGHT	17'-4"	

Vermont Agency of Transportation
RECEIVED
CK'D BY GL, RK, JG OK'D BY JS
January 27, 2014
RESUBMIT YES Rejected
BY KH DATE 2-18-2014

MICHIE CORPORATION
APPROVED FOR
CONSTRUCTION
DATE: 9/4/2013
INITIAL: PJL

No.	Date	Revision	By
△		EOR Comments	PJL
△		EOR Comments	PJL

STATE OF VERMONT
PAUL J. LEFRANCH
NO. 8871
PROFESSIONAL ENGINEER
01/19/14

MICHIE CORPORATION, INC.
173 BUXTON RIDGE TRAIL DRIVE-PO BOX 870
WESTMINSTER, VERMONT 05158
PHONE: 603-428-3218
FAX: 603-428-7426

Fire Drive off VT Rte. 30
VAOT #ER-BRF 015-1(23)
Jamaica, VT
16'x8' Box Culvert - BC3 & HW2 Details

Project No. 3745 | Designed by PJH | Drawn by PJH | Checked by TAF | Scale: AS SHOWN

Prepared for:
Bazin Brothers Trucking
2425 Back Westminster Road
Westminster, VT 05158

DWG NO.
S4.0

NOTE:
ADJUST REINFORCING SPACING AS REQUIRED TO AVOID INSERTS

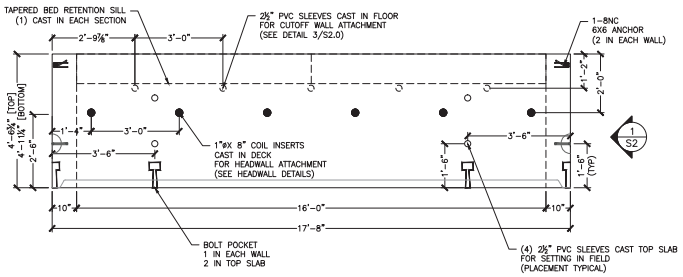

△ 1 S5.0 BC1 PLAN VIEW
⅛" = 1'-0"

1 REQUIRED
ITEM 281608
UNIT WEIGHT AND VOLUME: 38,560#
BC: (8.76CY)
BAFFLE: (0.42CY)

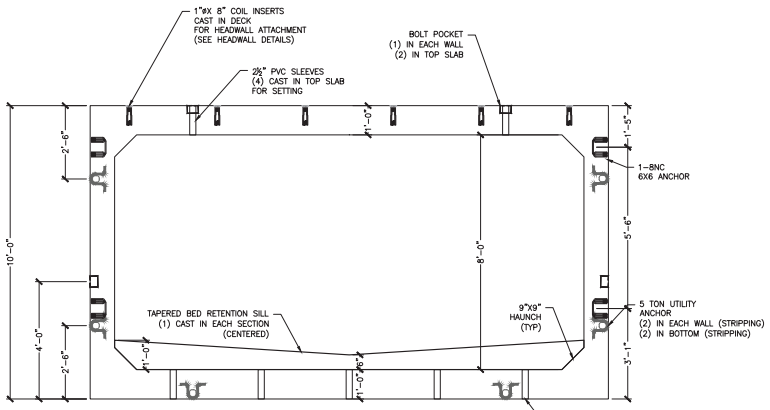

△ 2 S5.0 BC1 ELEVATION
⅛" = 1'-0"

1 REQUIRED
ITEM 275701 HW1
UNIT WEIGHT AND VOLUME: 20,000#
STEM: (3.42CY)
BASE: (1.34CY)

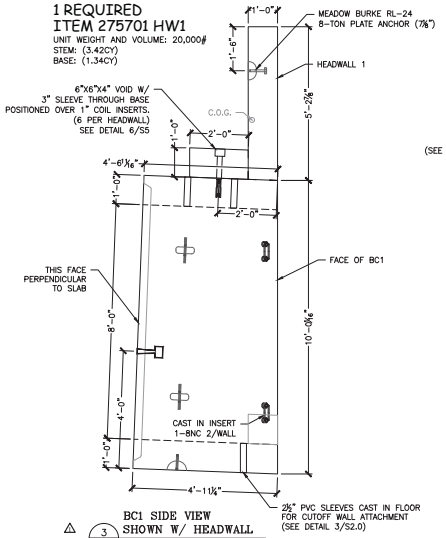

△ 3 S5.0 BC1 SIDE VIEW SHOWN W/ HEADWALL
⅛" = 1'-0"

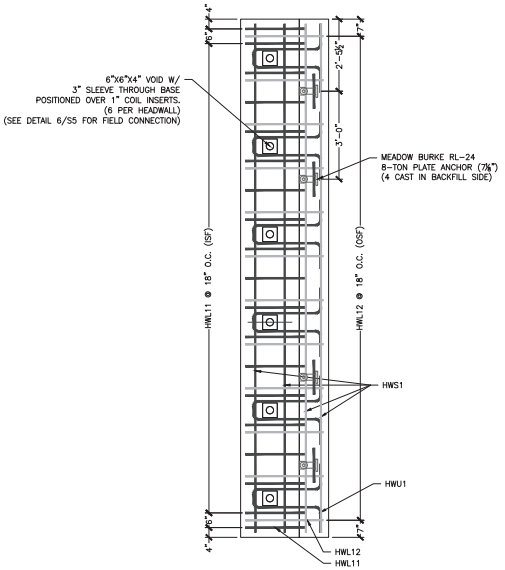

△ 4 S5.0 HW1 PLAN VIEW
⅛" = 1'-0"

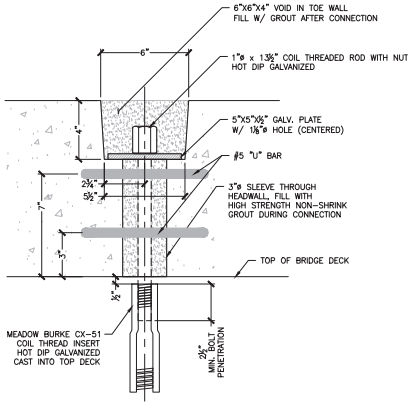

△ 6 S5.0 HEADWALL ANCHORAGE DETAIL
3" = 1'-0"

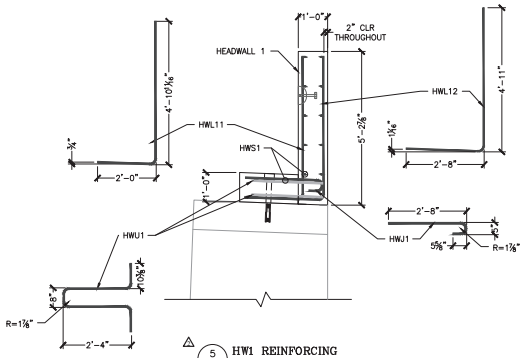

△ 5 S5.0 HW1 REINFORCING
⅛" = 1'-0"

ALL REINFORCING IN THIS DETAIL IS TO BE EPOXY COATED.
CHAIRS, SPACERS, AND TIES IN AREAS OF EPOXY COATED REINFORCING SHALL BE PLASTIC OR EPOXY COATED.

HEADWALL 1 REINFORCING SCHEDULE (COUNTS REFLECT 1 UNIT)

LOCATION	MARK	QTY	SIZE	SPACING	TYPE	CUT LENGTH	
VERTICAL ISF	HWL11	19	#5	12"	"L"	6'-9⅛"	
VERTICAL OSF	HWL12	12	#5	18"	"L"	7'-5⅛"	
LONGITUDINAL (STEM)	HWS1	12	#5	12"	STRAIGHT	17'-4"	
BASE TOP MAT	HWJ1	19	#5	12"	"J"	3'-3⅛"	
BASE AT SLEEVES	HWU1	6	#5	3'-0"	"U"	6'-7¼"	
LONGITUDINAL (BASE)	HWS1	4	#5	12"	STRAIGHT	17'-4"	

Vermont Agency of Transportation
RECEIVED
CK'D BY GL, RK, JG OK'D BY JS
January 27, 2014
RESUBMIT YES Rejected
BY KH DATE 2-18-2014

MICHIE CORPORATION
APPROVED FOR
CONSTRUCTION
DATE: 9/4/2013
INITIAL: PJL

No.	Date	Revision	By
△		EOR Comments	PJL
△		EOR Comments	PJL

STATE OF VERMONT
THOMAS A. FRENCH
NO. 8871
PROFESSIONAL ENGINEER
01/19/14

MICHIE CORPORATION, INC.
173 BUXTON RIDGE TRAIL DRIVE-PO BOX 870
WEST LEBANON, NH 03784
PHONE: 603-428-3218
FAX: 603-428-7426

Fire Drive off VT Rte. 30
VAOT #ER-BRF 015-1(23)
Jamaica, VT
16'x8' Box Culvert - BC1 & HW1 Details

Project No. 3745 | Designed by PJL | Drawn by PDH | Checked by TAF | Scale: AS SHOWN

Prepared for:
Bazin Brothers Trucking
2425 Back Westminster Road
Westminster, VT 05158

DWG NO.
S5.0

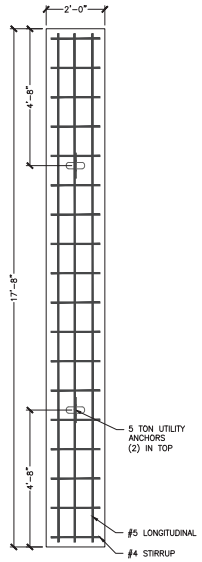

CUTOFF WALL PLAN VIEW

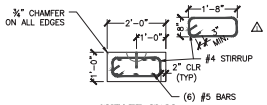

CUTOFF WALL SECTION

1 S6.0 1' CUTOFF WALL DETAILS
½" = 1'-0"

2 REQUIRED
ITEM 275800
UNIT WEIGHT AND VOLUME:
CUTOFF WALL: 5,500# (1.31CY)

CUTOFF WALL REINFORCING SCHEDULE (COUNTS REFLECT 1 UNIT)							
LOCATION	QTY	SIZE	SPACING	TYPE	CUT LENGTH		
#5 LONGITUDINAL	6	#5	12" MAX	STRAIGHT	17'-4"		
#4 STIRRUP	18	#4	12"	STIRRUP	4'-11¾"		

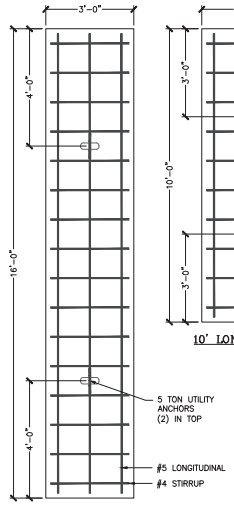

16' LONG FOOTING

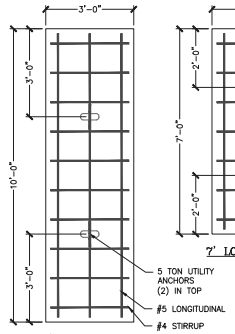

10' LONG FOOTING

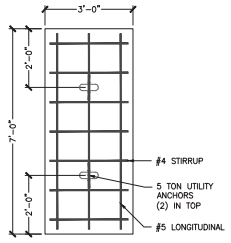

7' LONG FOOTING

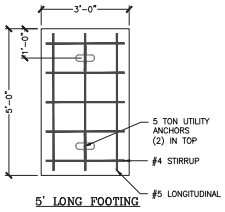

5' LONG FOOTING

2 S6.0 WINGWALL FOOTING DETAILS
½" = 1'-0"

2' TALL FOOTINGS
ITEM 382401
(3) 16' REQUIRED
(1) 10' REQUIRED
(1) 7' REQUIRED
UNIT WEIGHT AND VOLUME:
16': 14,935# (3.56CY)
10': 9,325# (2.22CY)
7': 6,430# (1.56CY)

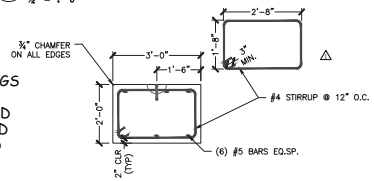

2'-0" TALL WW FOOTING SECTION

2' x 16' WINGWALL FOOTING REINFORCING SCHEDULE (COUNTS REFLECT 1 UNIT)							
LOCATION	QTY	SIZE	SPACING	TYPE	CUT LENGTH		
#4 LONGITUDINAL	6	#5	12" MAX	STRAIGHT	15'-8"		
#4 STIRRUP	16	#4	12"	STIRRUP	9'-0¾"		

2' x 10' WINGWALL FOOTING REINFORCING SCHEDULE (COUNTS REFLECT 1 UNIT)							
LOCATION	QTY	SIZE	SPACING	TYPE	CUT LENGTH		
#4 LONGITUDINAL	6	#5	12" MAX	STRAIGHT	9'-8"		
#4 STIRRUP	10	#4	12"	STIRRUP	9'-0¾"		

2' x 7' WINGWALL FOOTING REINFORCING SCHEDULE (COUNTS REFLECT 1 UNIT)							
LOCATION	QTY	SIZE	SPACING	TYPE	CUT LENGTH		
#4 LONGITUDINAL	6	#5	12" MAX	STRAIGHT	6'-8"		
#4 STIRRUP	7	#4	12"	STIRRUP	9'-0¾"		

3' TALL FOOTINGS
ITEM 382401
(1) 10' REQUIRED
(2) 7' REQUIRED
(1) 5' REQUIRED
UNIT WEIGHT AND VOLUME:
10': 14,000# (3.33CY)
7': 9,800# (2.33CY)
5': 7,000# (1.67CY)

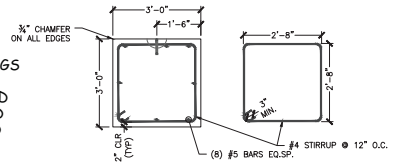

3'-0" TALL WW FOOTING SECTION

NOTE: 3'-0" TALL WINGWALL FOOTINGS ON WINGWALL 2 ONLY

3' x 10' WINGWALL FOOTING REINFORCING SCHEDULE (COUNTS REFLECT 1 UNIT)							
LOCATION	QTY	SIZE	SPACING	TYPE	CUT LENGTH		
#4 LONGITUDINAL	8	#5	12" MAX	STRAIGHT	9'-8"		
#4 STIRRUP	10	#4	12"	STIRRUP	11'-0¾"		

3' x 7' WINGWALL FOOTING REINFORCING SCHEDULE (COUNTS REFLECT 1 UNIT)							
LOCATION	QTY	SIZE	SPACING	TYPE	CUT LENGTH		
#4 LONGITUDINAL	8	#5	12" MAX	STRAIGHT	6'-8"		
#4 STIRRUP	7	#4	12"	STIRRUP	11'-0¾"		

3' x 5' WINGWALL FOOTING REINFORCING SCHEDULE (COUNTS REFLECT 1 UNIT)							
LOCATION	QTY	SIZE	SPACING	TYPE	CUT LENGTH		
#4 LONGITUDINAL	8	#5	12" MAX	STRAIGHT	4'-8"		
#4 STIRRUP	5	#4	12"	STIRRUP	11'-0¾"		

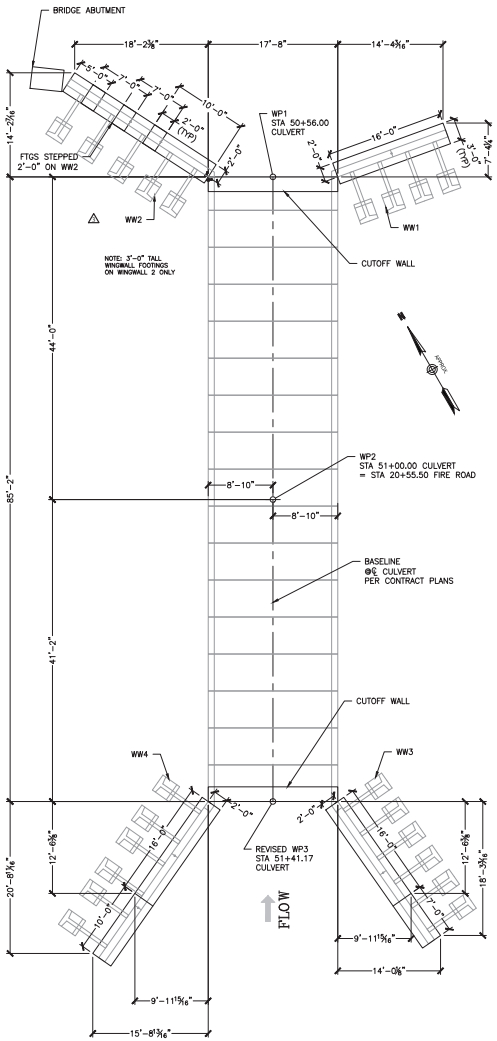

3 S6.0 FOOTING LAYOUT
⅛" = 1'-0"

Vermont Agency of Transportation
RECEIVED
CK'D BY GL, RK, JG OK'D BY JS
January 27, 2014
RESUBMIT YES Rejected
BY KH DATE 2-18-2014

MICHIE CORPORATION
APPROVED FOR
CONSTRUCTION
DATE: 9/4/2013
INITIAL: PJL

No.	Date	Revision	By
1		Revised W/W2	PJL
2		EOR Comments	PJL

STATE OF VERMONT THOMAS A. FRENCH NO. 8871 PROFESSIONAL ENGINEER
01/19/14

MICHIE CORPORATION, INC.
173 BUXTON INDUSTRIAL DRIVE-PO BOX 870
HINESBURG, VERMONT 05461
PHONE: 603-428-3218
FAX: 603-428-7426

Fire Drive off VT Rte. 30
VAOT #ER-BRF 015-1(23)
Jamaica, VT
16'x8' Box Culvert - Footing Details

Project No. 3745 | Designed by: PJL | Drawn by: PJH | Checked by: TAF | Scale: AS SHOWN

Prepared for:
Bazin Brothers Trucking
2425 Back Westminster Road
Westminster, VT 05158

DWG NO. S6.0

Vermont Agency of Transportation
RECEIVED
CK'D BY GL, RK, JG OK'D BY JS
January 27, 2014
RESUBMIT BY KH YES Rejected DATE 2-18-2014

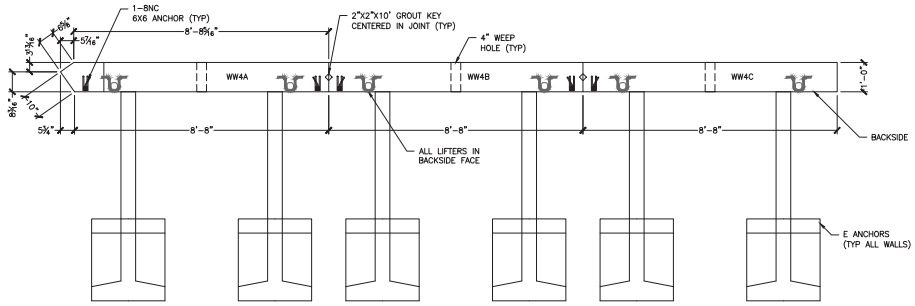

1 S7.0 WW4A,B&C PLAN VIEW
½" = 1'-0"

ALL REINFORCING IN THIS DETAIL IS TO BE EPOXY COATED.
CHAIRS, SPACERS, AND TIES IN AREAS OF EPOXY COATED REINFORCING SHALL BE PLASTIC OR EPOXY COATED.

WW4A REINFORCING SCHEDULE (COUNTS REFLECT 1 UNIT)					
BAR MARK	LOCATION	TYPE	SIZE/SPACING	CUT LENGTH	# OF PCS
VERTICAL	OSF	STRAIGHT	#5 @ 12"	VARIES 13'-11⅜" TO 14'-6"	9
VERTICAL	ISF	STRAIGHT	#6 @ 7"	VARIES 13'-11⅜" TO 14'-6"	15
HORIZONTAL	OSF	STRAIGHT	#4 @ 12"	8'-4"	15
HORIZONTAL	ISF	STRAIGHT	#4 @ 12"	8'-4"	15
DIAGONAL	FOLLOW SLOPE	STRAIGHT	#4	8'-4¼"	2

WW4B REINFORCING SCHEDULE (COUNTS REFLECT 1 UNIT)					
BAR MARK	LOCATION	TYPE	SIZE/SPACING	CUT LENGTH	# OF PCS
VERTICAL	OSF	STRAIGHT	#5 @ 12"	VARIES 14-6" TO 15'-1½"	9
VERTICAL	ISF	STRAIGHT	#6 @ 7"	VARIES 14-6" TO 15'-1½"	15
HORIZONTAL	OSF	STRAIGHT	#4 @ 12"	8'-4"	15
HORIZONTAL	ISF	STRAIGHT	#4 @ 12"	8'-4"	15
DIAGONAL	FOLLOW SLOPE	STRAIGHT	#4	8'-4¼"	2

WW4C REINFORCING SCHEDULE (COUNTS REFLECT 1 UNIT)					
BAR MARK	LOCATION	TYPE	SIZE/SPACING	CUT LENGTH	# OF PCS
VERTICAL	OSF	STRAIGHT	#5 @ 12"	VARIES 15'-1½" TO 15'-8"	9
VERTICAL	ISF	STRAIGHT	#6 @ 7"	VARIES 15'-1½" TO 15'-8"	15
HORIZONTAL	OSF	STRAIGHT	#4 @ 12"	8'-4"	15
HORIZONTAL	ISF	STRAIGHT	#4 @ 12"	8'-4"	15
DIAGONAL	FOLLOW SLOPE	STRAIGHT	#4	8'-4¼"	2

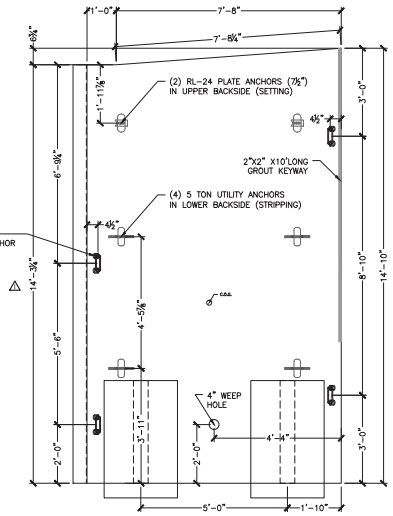

1 REQUIRED
ITEM 375602-4A
UNIT WEIGHT AND VOLUME: 25,750#
WALL: 4.91CY
E ANCHORS: 0.61CY

2 S7.0 WW4A ELEVATION (LOOKING AT BACKSIDE)
½" = 1'-0"

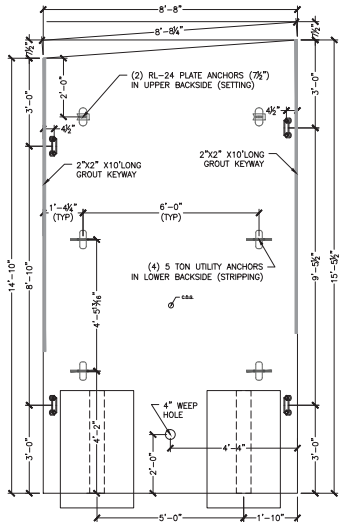

1 REQUIRED
ITEM 375602-4B
UNIT WEIGHT AND VOLUME: 25,520#
WALL: 4.86CY
E ANCHORS: 0.61CY

3 S7.0 WW4B ELEVATION (LOOKING AT BACKSIDE)
½" = 1'-0"

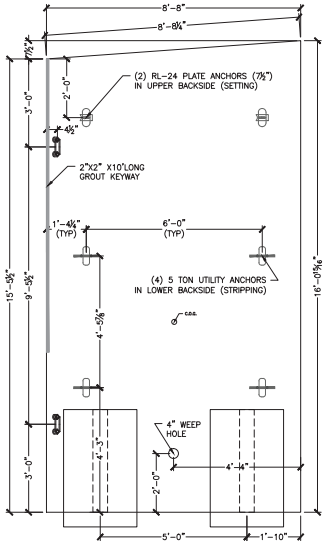

1 REQUIRED
ITEM 375602-4C
UNIT WEIGHT AND VOLUME: 26,380#
WALL: 5.06CY
E ANCHORS: 0.61CY

4 S7.0 WW4C ELEVATION (LOOKING AT BACKSIDE)
½" = 1'-0"

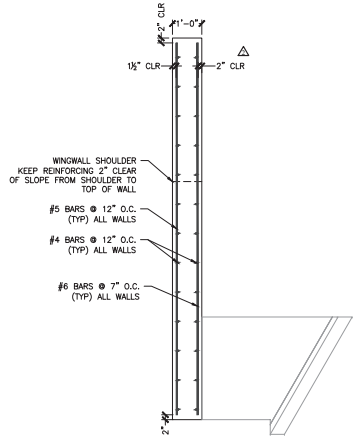

5 S7.0 WINGWALL REINFORCING (TYP)
½" = 1'-0"

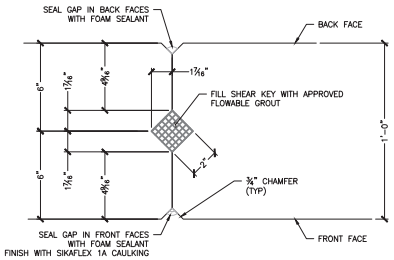

6 S7.0 VERTICAL JOINT DETAIL
3" = 1'-0"

MICHIE CORPORATION
APPROVED FOR
CONSTRUCTION
DATE: 9/4/2013
INITIAL: PJL

No.	Date	Revision	By
		EOR Comments	PJL
		EOR Comments	PJL

STATE OF VERMONT
THOMAS A. FRENCH
NO. 8871
PROFESSIONAL ENGINEER
01/19/14

MICHIE CORPORATION, INC.
173 BUXTON INDUSTRIAL DRIVE-PO BOX 870
HINESBURG, VERMONT 05461
PHONE: 603-428-3218
FAX: 603-428-7426

Fire Drive off VT Rte. 30
VAOT #ER-BRF 015-1(23)
Jamaica, VT
16'x8' Box Culvert - Wingwall 4 Details

Project No. 3745 | Designed by: PJL | Drawn by: PDH | Checked by: TAF | Scale: AS SHOWN

Prepared for:
Bazin Brothers Trucking
2425 Back Westminster Road
Westminster, VT 05158

DWG NO.
S7.0

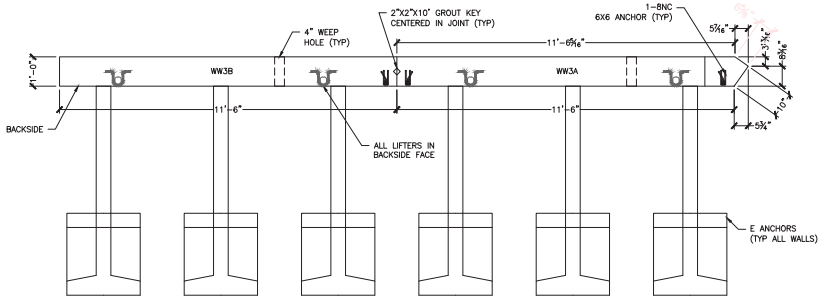

1 S8.0 WW3A&B PLAN VIEW
1/4" = 1'-0"

ALL REINFORCING IN THIS DETAIL IS TO BE EPOXY COATED.
CHAIRS, SPACERS, AND TIES IN AREAS OF EPOXY COATED REINFORCING SHALL BE PLASTIC OR EPOXY COATED.

WW3A REINFORCING SCHEDULE (COUNTS REFLECT 1 UNIT)

BAR MARK	LOCATION	TYPE	SIZE/SPACING	CUT LENGTH	# OF PCS
VERTICAL	OSF	STRAIGHT	#5 @ 12"	VARIES 13'-6 3/4" TO 13'-11 1/4"	12
VERTICAL	ISF	STRAIGHT	#6 @ 7"	VARIES 13'-6 3/4" TO 13'-11 1/4"	20
HORIZONTAL	OSF	STRAIGHT	#4 @ 12"	8'-4"	14
HORIZONTAL	ISF	STRAIGHT	#4 @ 12"	8'-4"	14
DIAGONAL	FOLLOW SLOPE	STRAIGHT	#4	8'-4 1/4"	2

WW3B REINFORCING SCHEDULE (COUNTS REFLECT 1 UNIT)

BAR MARK	LOCATION	TYPE	SIZE/SPACING	CUT LENGTH	# OF PCS
VERTICAL	OSF	STRAIGHT	#5 @ 12"	VARIES 13'-1 3/4" TO 13'-6 3/4"	12
VERTICAL	ISF	STRAIGHT	#6 @ 7"	VARIES 13'-1 3/4" TO 13'-6 3/4"	20
HORIZONTAL	OSF	STRAIGHT	#4 @ 12"	8'-4"	14
HORIZONTAL	ISF	STRAIGHT	#4 @ 12"	8'-4"	14
DIAGONAL	FOLLOW SLOPE	STRAIGHT	#4	8'-4 1/4"	2

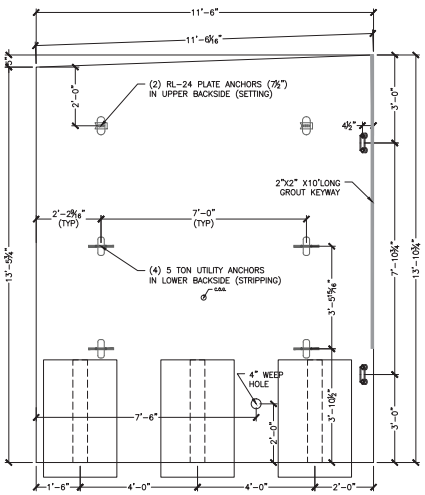

1 REQUIRED
ITEM 375602-3B
UNIT WEIGHT AND VOLUME: 32,150#
WALL: 5.83CY
E ANCHORS: 0.61CY

2 S8.0 WW3B ELEVATION (LOOKING AT BACKSIDE)
1/4" = 1'-0"

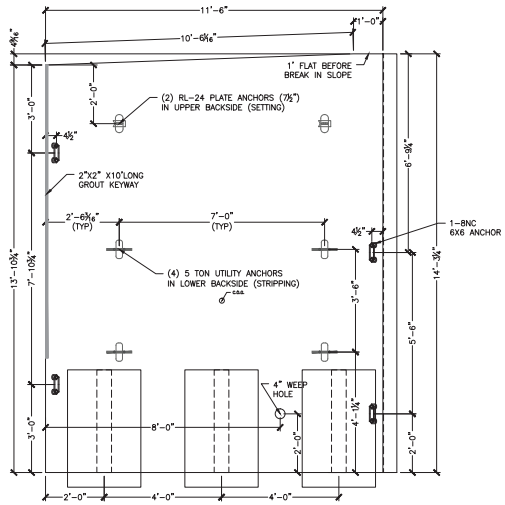

1 REQUIRED
ITEM 375602-3A
UNIT WEIGHT AND VOLUME: 34,120#
WALL: 6.30CY
E ANCHORS: 0.61CY

3 S8.0 WW3A ELEVATION (LOOKING AT BACKSIDE)
1/4" = 1'-0"

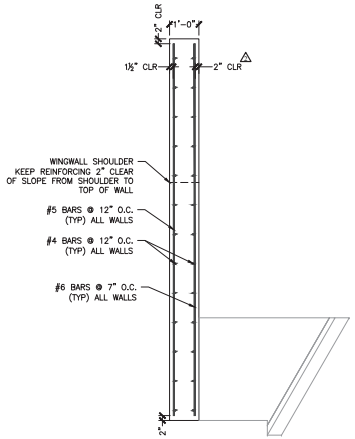

4 S8.0 WINGWALL REINFORCING (TYP)
1/4" = 1'-0"

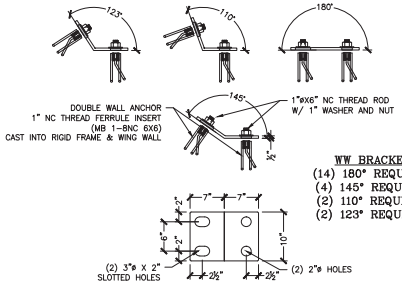

WW BRACKET
(14) 180° REQUIRED
(4) 145° REQUIRED
(2) 110° REQUIRED
(2) 123° REQUIRED

PLATES TO BE MADE OF 1/2" MILD STEEL, PLASMA CUT, AND BENT AS REQUIRED. (HOT DIPPED GALVANIZED AFTER BENDING)

5 S8.0 WINGWALL BRACKET DETAIL
1" = 1'-0"

Vermont Agency of Transportation
RECEIVED
CK'D BY GL, RK, JG OK'D BY JS
January 27, 2014
RESUBMIT YES Rejected
BY KH DATE 2-18-2014

No.	Date	Revision	By
		EOR Comments	PJL
		EOR Comments	PJL

STATE OF VERMONT
THOMAS E. FRENCH
NO. 8871
PROFESSIONAL ENGINEER
01/19/14

MICHIE CORPORATION, INC.
173 BUXTON INDUSTRIAL DRIVE-PO BOX 870
WINDSOR, VERMONT 05089
PHONE: 603-428-3218
FAX: 603-428-7426

Fire Drive off VT Rte. 30
VAOT #ER-BRF 015-1(23)
Jamaica, VT
16'x8' Box Culvert - Wingwall 3 Details

Scale: AS SHOWN
Checked by: TAF
Drawn by: PDH
Designed by: PJL
Project No. 3745

Prepared for:
Bazin Brothers Trucking
2425 Back Westminster Road
Westminster, VT 05158

DWG NO.
S8.0

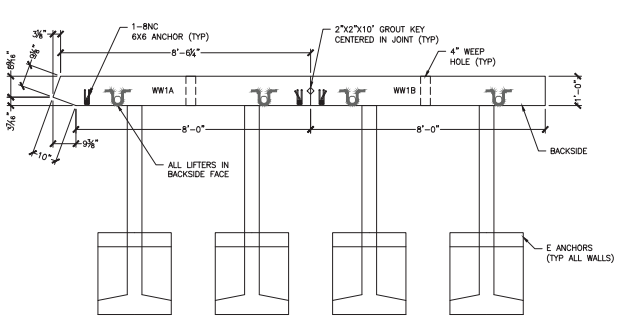

1 S9.0 WW1A&B PLAN VIEW
½" = 1'-0"

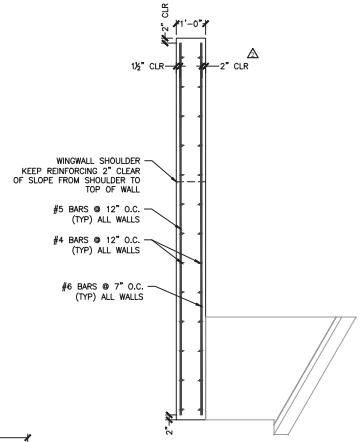

4 S9.0 WINGWALL REINFORCING (TYP)
½" = 1'-0"

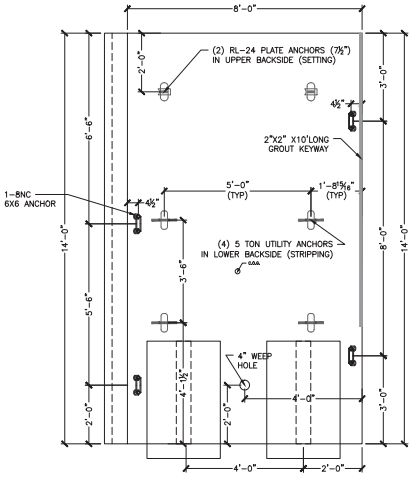

1 REQUIRED
ITEM 375602-1A
UNIT WEIGHT AND VOLUME: 24,070#
WALL: 4.51CY
E ANCHORS: 0.61CY

2 S9.0 WW1A ELEVATION
(LOOKING AT BACKSIDE)
½" = 1'-0"

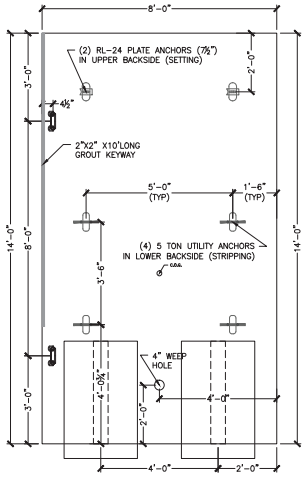

1 REQUIRED
ITEM 375602-1B
UNIT WEIGHT AND VOLUME: 22,725#
WALL: 4.19CY
E ANCHORS: 0.61CY

3 S9.0 WW1B ELEVATION
(LOOKING AT BACKSIDE)
½" = 1'-0"

△ SEE SHEET S11.0 FOR
WW2 DETAILS

△ ALL REINFORCING IN THIS DETAIL IS TO BE EPOXY COATED.
CHAIRS, SPACERS, AND TIES IN AREAS OF EPOXY COATED REINFORCING SHALL BE PLASTIC OR EPOXY COATED.

WW1A REINFORCING SCHEDULE (COUNTS REFLECT 1 UNIT)

BAR MARK	LOCATION	TYPE	SIZE/SPACING	CUT LENGTH	# OF PCS
VERTICAL	OSF	STRAIGHT	#5 @ 12"	13'-8"	8
VERTICAL	ISF	STRAIGHT	#6 @ 7"	13'-8"	14
HORIZONTAL	OSF	STRAIGHT	#4 @ 12"	8'-2¼"	14
HORIZONTAL	ISF	STRAIGHT	#4 @ 12"	8'-2¼"	14

WW1B REINFORCING SCHEDULE (COUNTS REFLECT 1 UNIT)

BAR MARK	LOCATION	TYPE	SIZE/SPACING	CUT LENGTH	# OF PCS
VERTICAL	OSF	STRAIGHT	#5 @ 12"	13'-8"	8
VERTICAL	ISF	STRAIGHT	#6 @ 7"	13'-8"	14
HORIZONTAL	OSF	STRAIGHT	#4 @ 12"	7'-8"	14
HORIZONTAL	ISF	STRAIGHT	#4 @ 12"	7'-8"	14

Vermont Agency of Transportation
RECEIVED
CK'D BY GL, RK, JG OK'D BY JS
January 27, 2014
RESUBMIT YES Rejected
BY KH DATE 2-18-2014

No.	Date	Revision	By
△		Revised WW2	PJL
△		EOR Comments	PJL
△		EOR Comments	PJL

STATE OF VERMONT
THOMAS A. FRENCH
NO. 8871
PROFESSIONAL ENGINEER
01/19/14

MICHIE CORPORATION, INC.
173 BUXTON INDUSTRIAL DRIVE-PO BOX 870
JOHNSON, VERMONT 05656
PHONE: 603-428-3218
FAX: 603-428-7426

Fire Drive off VT Rte. 30
VAOT #ER-BRF 015-1(23)
Jamaica, VT
16'x8' Box Culvert - Wingwall 1 Details

Project No. 3745 | Designed by PJL | Drawn by PJH | Checked by TAF | Scale: AS SHOWN

Prepared for:
Bazin Brothers Trucking
2425 Back Westminster Road
Westminster, VT 05158

DWG NO.
S9.0

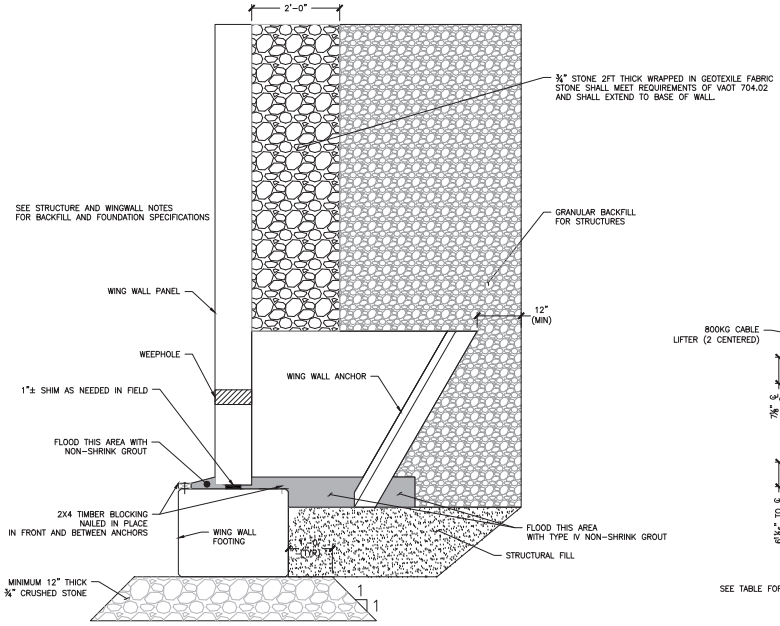

△ 1 / S10.0 FOOTING TO WW ATTACHMENT DETAIL
¾" = 1'-0"

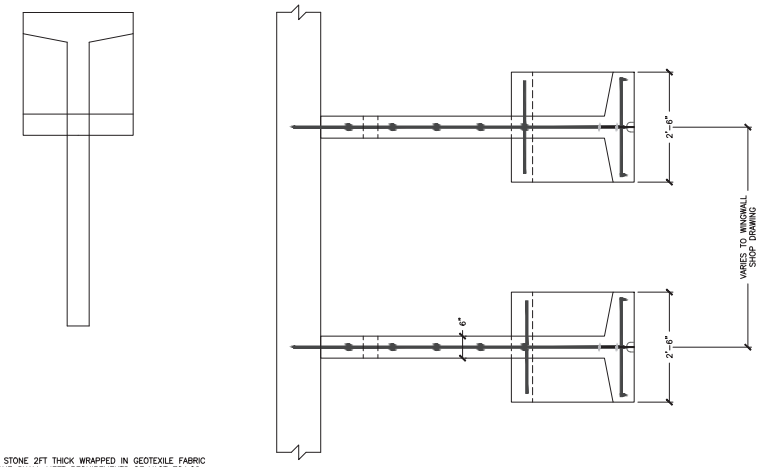

NOTE: REINFORCING SHOWN REPRESENTS "E" ANCHOR
OTHER ANCHOR REINFORCING SIMILAR
ALL REINFORCING IN THIS DETAIL TO BE EPOXY COATED

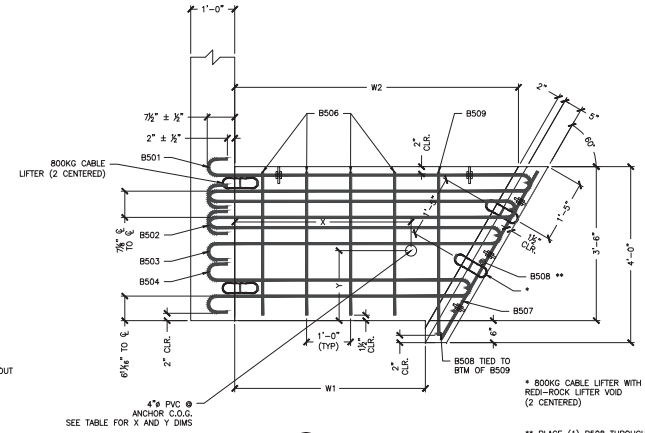

* 800KG CABLE LIFTER WITH REDI-ROCK LIFTER VOID (2 CENTERED)

** PLACE (1) B508 THROUGH EACH HOOP BARS, (1) CENTERED BETWEEN HOOP BARS 503 & 504, AND (2) BELOW B504 HOOP BAR W/ BOTTOM B508 2" CLEAR FROM BOTTOM (7 TOTAL)

2 / S10.0 ANCHOR DETAIL
¾" = 1'-0"

△ ALL REINFORCING IN THIS DETAIL IS TO BE EPOXY COATED.
CHAIRS, SPACERS, AND TIES IN AREAS OF EPOXY COATED REINFORCING SHALL BE PLASTIC OR EPOXY COATED.

ANCHOR TYPE "B"					
CONCRETE QUANTITY				0.41 CY	
WEIGHT				1740 LB	
W1				1'-4"	
W2				3'-5⅜"	
X =	2'-2⅛"	Y=	1'-8⅜"		
BAR LIST					
MARK	QTY	SIZE	L	TYPE	LENGTH
B501	1	#5	4'-4½"	1	10'-1½"
B502	1	#5	4'-0½"	1	9'-5"
B503	1	#5	3'-8¼"	1	8'-9"
B504	1	#5	3'-0"	1	7'-4½"
B505	2	#5	3'-8½"	2	4'-7"
B506	2	#5	----	Str.	3'-3"
B507	4	#5	----	Str.	4'-4½"
B508	7	#5	----	Str.	2'-3"
B509	2	#5	----	Str.	3'-8"

ANCHOR TYPE "C"					
CONCRETE QUANTITY				0.48 CY	
WEIGHT				2010 LB	
W1				2'-4"	
W2				4'-5⅜"	
X =	2'-8¾"	Y=	1'-8½"		
BAR LIST					
MARK	QTY	SIZE	L	TYPE	LENGTH
B501	1	#5	5'-4½"	1	12'-1½"
B502	1	#5	5'-0½"	1	11'-5"
B503	1	#5	4'-8¼"	1	10'-9"
B504	1	#5	4'-0"	1	9'-4½"
B505	2	#5	3'-8½"	2	4'-7"
B506	2	#5	----	Str.	3'-3"
B507	4	#5	----	Str.	4'-4½"
B508	7	#5	----	Str.	2'-3"
B509	2	#5	----	Str.	3'-8"

ANCHOR TYPE "D"					
CONCRETE QUANTITY				0.54 CY	
WEIGHT				2285 LB	
W1				3'-4"	
W2				5'-5⅜"	
X =	3'-5⅜"	Y=	1'-8½"		
BAR LIST					
MARK	QTY	SIZE	L	TYPE	LENGTH
B501	1	#5	6'-4½"	1	14'-1½"
B502	1	#5	6'-0½"	1	13'-5"
B503	1	#5	5'-8¼"	1	12'-9"
B504	1	#5	5'-0"	1	11'-4½"
B505	2	#5	3'-8½"	2	4'-7"
B506	2	#5	----	Str.	3'-3"
B507	4	#5	----	Str.	4'-4½"
B508	7	#5	----	Str.	2'-3"
B509	2	#5	----	Str.	3'-8"

ANCHOR TYPE "E"					
CONCRETE QUANTITY				0.61 CY	
WEIGHT				2550 LB	
W1				4'-4"	
W2				6'-5⅜"	
X =	4'-0"	Y=	1'-8⅜"		
BAR LIST					
MARK	QTY	SIZE	L	TYPE	LENGTH
B501	1	#5	7'-4½"	1	16'-1½"
B502	1	#5	7'-0½"	1	15'-5"
B503	1	#5	6'-8¼"	1	14'-9"
B504	1	#5	6'-0"	1	13'-4½"
B505	2	#5	3'-8½"	2	4'-7"
B506	6	#5	----	Str.	3'-3"
B507	4	#5	----	Str.	4'-4½"
B508	7	#5	----	Str.	2'-3"
B509	2	#5	----	Str.	3'-8"

20 REQ'D

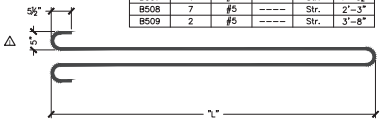

TYPE 1

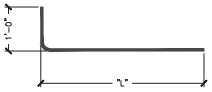

TYPE 2

Vermont Agency of Transportation
RECEIVED
CK'D BY GL, RK, JG OK'D BY JS
January 27, 2014
RESUBMIT YES Rejected
BY KH DATE 2-18-2014

No.	Date	Revision	By
△		EOR Comments	PJL
△		EOR Comments	PJL

STATE OF VERMONT THOMAS E. FRENCH NO. 8871 PROFESSIONAL ENGINEER
01/19/14

MICHIE CORPORATION, INC.
173 BUXTON INDUSTRIAL DRIVE-PO BOX 870
WESTMINSTER, VERMONT 05158
PHONE: 603-428-3218
FAX: 603-428-7426

Fire Drive off VT Rte. 30
VAOT #ER-BRF 015-1(23)
Jamaica, VT
16'x8' Box Culvert - Wingwall Anchor Details

Project No. 3745 | Designed by PJL | Drawn by PDH | Checked by TAF | Scale: AS SHOWN

Prepared for:
Bazin Brothers Trucking
2425 Back Westminster Road
Westminster, VT 05158

DWG NO.
S10.0

ALL REINFORCING IN THIS DETAIL IS TO BE EPOXY COATED. CHAIRS, SPACERS, AND TIES IN AREAS OF EPOXY COATED REINFORCING SHALL BE PLASTIC OR EPOXY COATED.

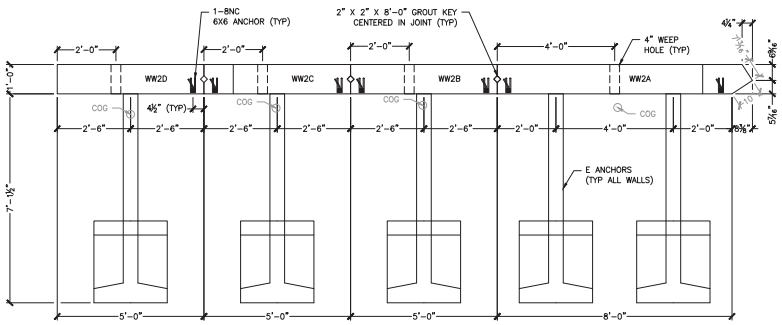

1 WW2 PLAN VIEW
511.0 ½" = 1'-0"

WW2A REINFORCING SCHEDULE					
BAR MARK	LOCATION	TYPE	SIZE/SPACING	CUT LENGTH	# OF PCS
VERTICAL	OSF	STRAIGHT	#5 @ 12"	VARIES 15'-0" TO 12'-10"	9
VERTICAL	ISF	STRAIGHT	#6 @ 7"	VARIES 15'-0" TO 12'-10"	15
HORIZONTAL	OSF	STRAIGHT	#4 @ 12"	8'-0"	15
HORIZONTAL	ISF	STRAIGHT	#4 @ 12"	8'-0"	15
DIAGONAL	FOLLOW SLOPE	STRAIGHT	#4	7'-0"	2

WW2B REINFORCING SCHEDULE					
BAR MARK	LOCATION	TYPE	SIZE/SPACING	CUT LENGTH	# OF PCS
VERTICAL	OSF	STRAIGHT	#5 @ 12"	VARIES 13'-7" TO 12'-0"	5
VERTICAL	ISF	STRAIGHT	#6 @ 7"	VARIES 13'-7" TO 12'-0"	9
HORIZONTAL	OSF	STRAIGHT	#4 @ 12"	4'-8"	14
HORIZONTAL	ISF	STRAIGHT	#4 @ 12"	4'-8"	14
DIAGONAL	FOLLOW SLOPE	STRAIGHT	#4	4'-11¼"	2

WW2C REINFORCING SCHEDULE					
BAR MARK	LOCATION	TYPE	SIZE/SPACING	CUT LENGTH	# OF PCS
VERTICAL	OSF	STRAIGHT	#5 @ 12"	VARIES 11'-9" TO 10'-7"	5
VERTICAL	ISF	STRAIGHT	#6 @ 7"	VARIES 11'-9" TO 10'-7"	9
HORIZONTAL	OSF	STRAIGHT	#4 @ 12"	4'-8"	12
HORIZONTAL	ISF	STRAIGHT	#4 @ 12"	4'-8"	12
DIAGONAL	FOLLOW SLOPE	STRAIGHT	#4	3'-10"	2

WW2D REINFORCING SCHEDULE					
BAR MARK	LOCATION	TYPE	SIZE/SPACING	CUT LENGTH	# OF PCS
VERTICAL	OSF	STRAIGHT	#5 @ 12"	8'-9"	5
VERTICAL	ISF	STRAIGHT	#6 @ 7"	8'-9"	9
HORIZONTAL	OSF	STRAIGHT	#4 @ 12"	4'-8"	9
HORIZONTAL	ISF	STRAIGHT	#4 @ 12"	4'-8"	9

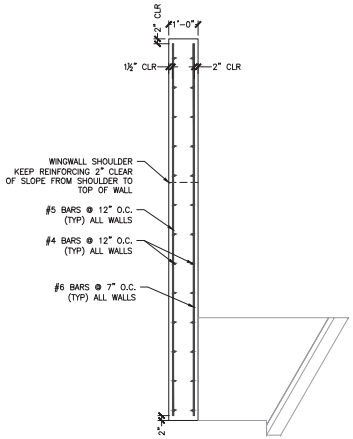

6 WINGWALL REINFORCING (TYP)
511.0 ½" = 1'-0"

PROVIDE CONNECTIONS OUT OF THE WINGWALL INTO THE CLOSURE POUR FOR REINFORCING STEEL

PROPOSED DIMENSIONS DO NOT SEEM TO TRANSITION SMOOTHLY ACCROSS THE SLOPE. VERIFY ALL.

1 REQUIRED
ITEM 375602-2D
UNIT WEIGHT AND VOLUME: 9,620#
WALL: 1.68CY
E ANCHORS: 0.61CY

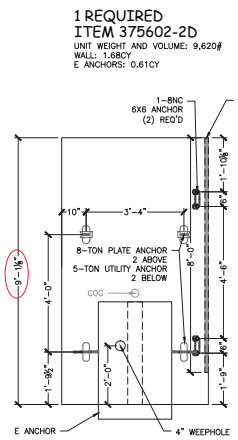

2 WW2D ELEVATION
511.0 ½" = 1'-0"

1 REQUIRED
ITEM 375602-2C
UNIT WEIGHT AND VOLUME: 11,590#
WALL: 2.15CY
E ANCHORS: 0.61CY

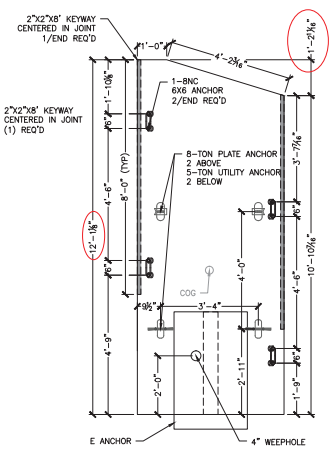

3 WW2C ELEVATION
511.0 ½" = 1'-0"

1 REQUIRED
ITEM 375602-2B
UNIT WEIGHT AND VOLUME: 12,770#
WALL: 2.43CY
E ANCHORS: 0.61CY

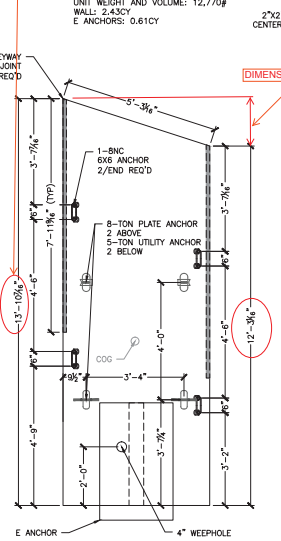

4 WW2B ELEVATION
511.0 ½" = 1'-0"

1 REQUIRED
ITEM 375602-2A
UNIT WEIGHT AND VOLUME: 23,800#
WALL: 5.66CY
E ANCHORS: 2 @ 0.61CY

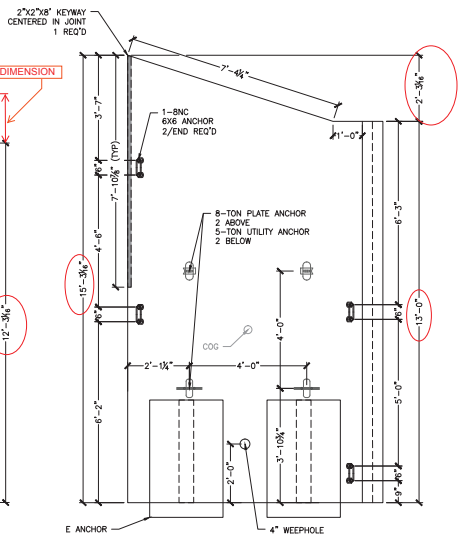

5 WW2A ELEVATION
511.0 ½" = 1'-0"

Vermont Agency of Transportation
RECEIVED
CK'D BY GL, RK, JG OK'D BY JS
January 27, 2014
RESUBMIT YES Rejected
BY KH DATE 2-18-2014

No.	Date	Revision	By
		Revised WW2	PJL
		EOR Comments	PJL
		EOR Comments	PJL

STATE OF VERMONT
THOMAS J. FRENCH
NO. 8871
PROFESSIONAL ENGINEER
01/19/14

MICHIE CORPORATION, INC.
173 BUXTON INDUSTRIAL DRIVE-PO BOX 870
WESTMINSTER, VERMONT 05158
PHONE: 603-428-3218
FAX: 603-428-7426

Fire Drive off VT Rte. 30
VAOT #ER-BRF 015-1(23)
Jamaica, VT
16'x8' Box Culvert - Wingwall 2 Details

Scale: AS SHOWN
Checked by: T.AF
Drawn by: PDH
Designed by: PJL
Project No. 3745

Prepared for:
Bazin Brothers Trucking
2425 Back Westminster Road
Westminster, VT 05158

DWG NO.
S11.0