MILLER CONSTRUCTION, INC.

P.O. BOX 86 ASCUTNEY BLVD WINDSOR, VERMONT 05089-0086
TELEPHONE (802) 674-5525 / FAX (802) 674-5245

TRANSMITTAL

TO: Kristin Higgins Vermont Agency of Transportation	DATE	PROJECT NO.
	8/22/2013	Jamaica ER-BRF 015-1 (23)

XX WE ENCLOSE THE FOLLOWING: _____ UNDER SEPARATE COVER WE ARE SENDING THE FOLLOWING

COPIES	NUMBER	DESCRIPTION	CODE
1		Box Culvert Shop Drawings - Rev 2	H
1		Box Culvert Design Calculations - Rev 2	H

CODE:

A FOR INITIAL APPROVAL
B FOR FINAL APPROVAL
C APPROVED AS NOTED-RESUBMISSION REQUIRED
D APPROVED AS NOTED-RESUBMISSION NOT REQUIRED
E DISAPPROVED-RESUBMIT
F QUOTATION REQUESTED
G APPROVED
H FOR APPROVAL
I AS REQUESTED OR REQUIRED
J FOR USE IN ERECTION
K LETTER FOLLOWS
L FOR FIELD CHECK
M FOR YOUR USE

BY: Paul

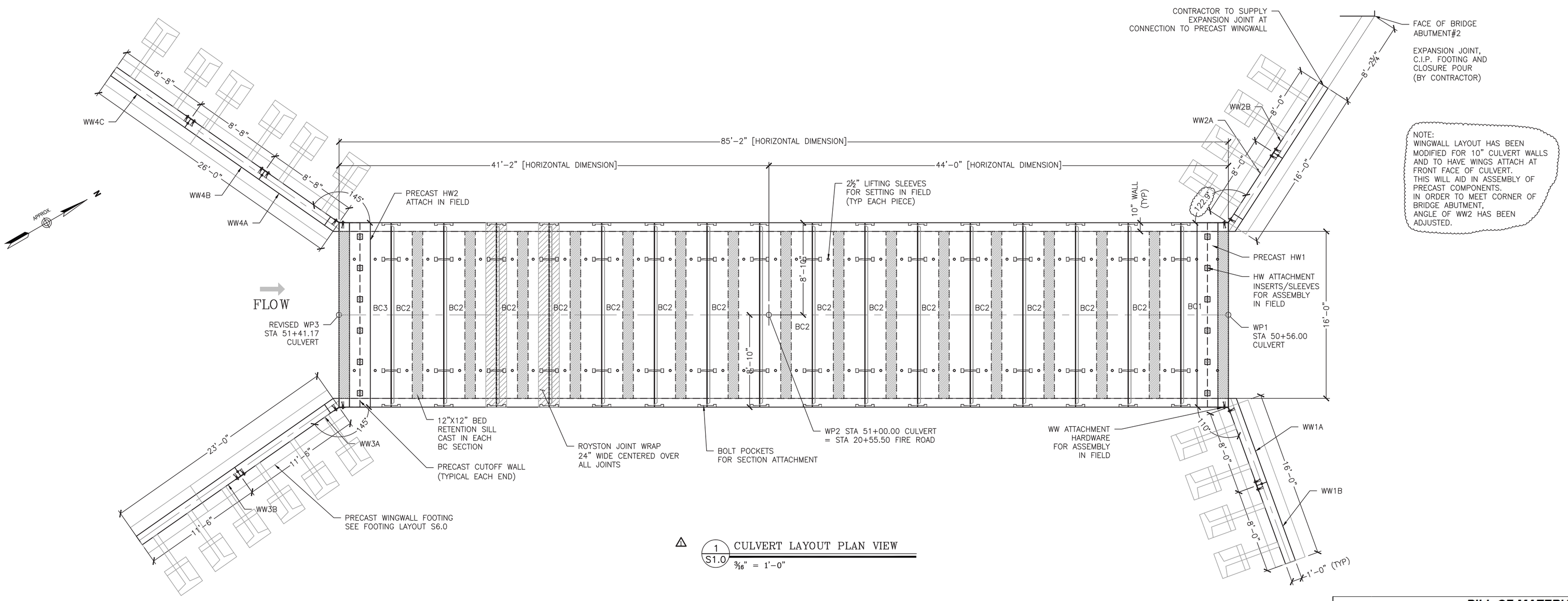

NOTE:
WINGWALL LAYOUT HAS BEEN MODIFIED FOR 10" CULVERT WALLS AND TO HAVE WINGS ATTACH AT FRONT FACE OF CULVERT. THIS WILL AID IN ASSEMBLY OF PRECAST COMPONENTS. IN ORDER TO MEET CORNER OF BRIDGE ABUTMENT, ANGLE OF WW2 HAS BEEN ADJUSTED.

△ 1 / S1.0 CULVERT LAYOUT PLAN VIEW
3/16" = 1'-0"

BILL OF MATERIALS

QTY	DESCRIPTION	IN STOCK	ORDERED FROM	DATE ORDERED	DATE DELIVERED
	ITEMS CAST-IN				
112	5 TON UTILITY ANCHOR				
24	RL-24 8 TON PLATE ANCHOR (7 1/4")				
34	1-8NC DOUBLE THREADED INSERTS				
	ITEMS FOR PRESHIPPING/PREP.				
880LF	1" CLOSED CELL NEOPRENE				
1 GAL	RED ADHESIVE				
6 GAL	VEXCON PENSEAL 244 WATER REPELLENT (900 SF APPROX COVERAGE AREA)				
	ITEMS TO SHIP TO THE JOB				
10	1/2" MILD STEEL 180d STEEL BRACKET				
4	1/2" MILD STEEL 145d STEEL BRACKET				
2	1/2" MILD STEEL 123d STEEL BRACKET				
2	1/2" MILD STEEL 110d STEEL BRACKET				
600LF	24" ROYSTON JOINT WRAP				
6 GAL	ROYBOND 740 ADHESIVE				
64	7/8"X18" GALV. THREADED ROD				
256	1"d X 1 1/2" X 1/8" GALV. WASHER				
128	7/8" GALV. NUT				
72	1"X5" NC THREAD ROD				
72	1" DIA NUT				

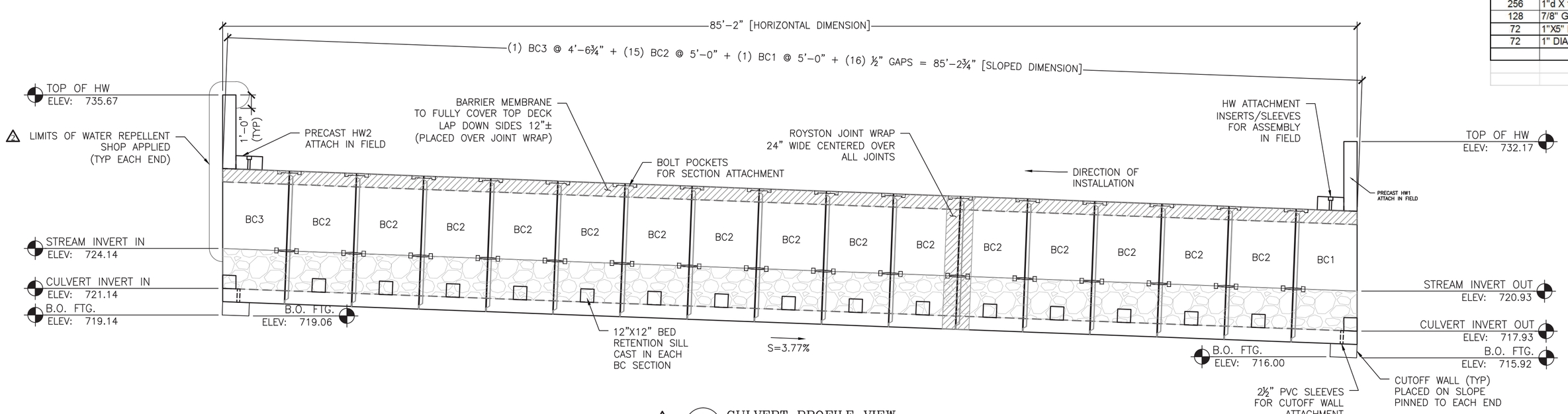

△ 2 / S1.0 CULVERT PROFILE VIEW
3/16" = 1'-0"

LIST OF SHEETS:
S1.0 – LAYOUT & PROFILE
S2.0 – ELEVATIONS & CONNECTION DETAILS
S3.0 – BC2 DETAILS
S4.0 – BC3 & HW2 DETAILS
S5.0 – BC1 & HW1 DETAILS
S6.0 – FOOTING DETAILS
S7.0 – WINGWALL 4 DETAILS
S8.0 – WINGWALL 3 DETAILS
S9.0 – WINGWALL 1 & WW2 DETAILS
S10.0 – WINGWALL ANCHOR DETAILS

No.	Date	Revision	By
1		EOR Comments	PJL
2		EOR Comments	PJL

STATE OF VERMONT
THOMAS A. FRENCH
NO. 8871
LICENSED PROFESSIONAL ENGINEER
08/22/13

MICHIE CORPORATION, INC.
173 BUXTON INDUSTRIAL DRIVE-PO BOX 870
HENNIKER, NH 03242
PHONE: 603-428-3218
FAX: 603-428-7426

Fire Drive off VT Rte. 30
VAOT #ER-BRF 015-1(23)
Jamaica, VT
16'x8' Box Culvert - Layout & Profile

Project No. 3745
Designed by: PJL
Drawn by: PDH
Checked by: TAF
Scale: AS SHOWN

Prepared for:
Bazin Brothers Trucking
2425 Back Westminster Road
Westminster, VT 05158

DWG NO.
S1.0

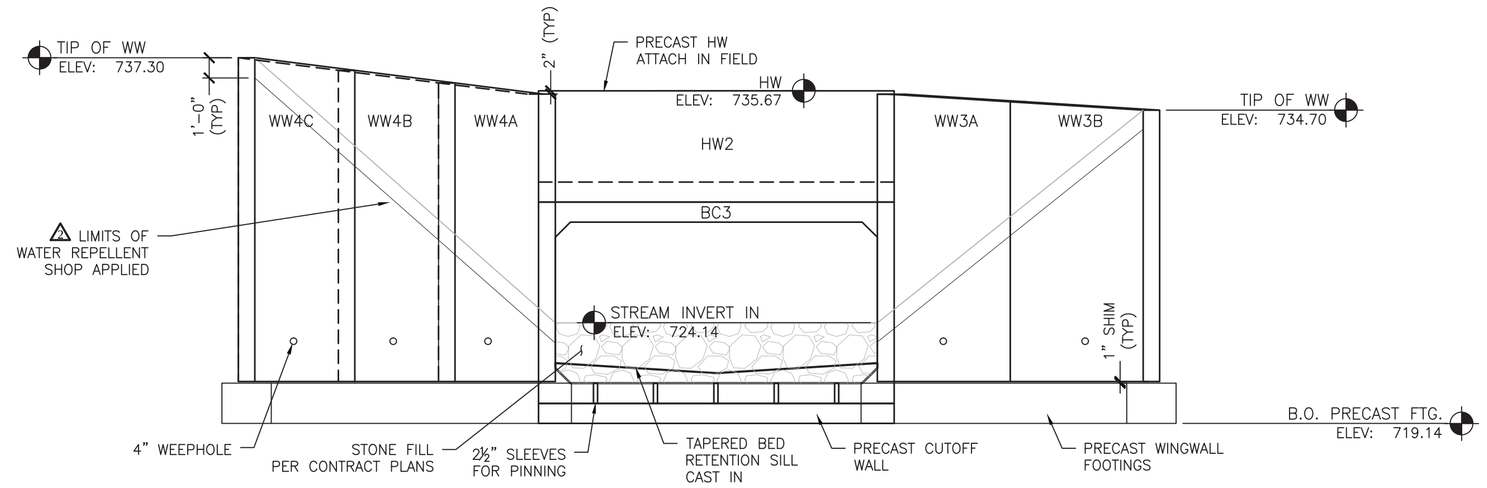

1 S2.0 UPSTREAM ELEVATION
3/16" = 1'-0"

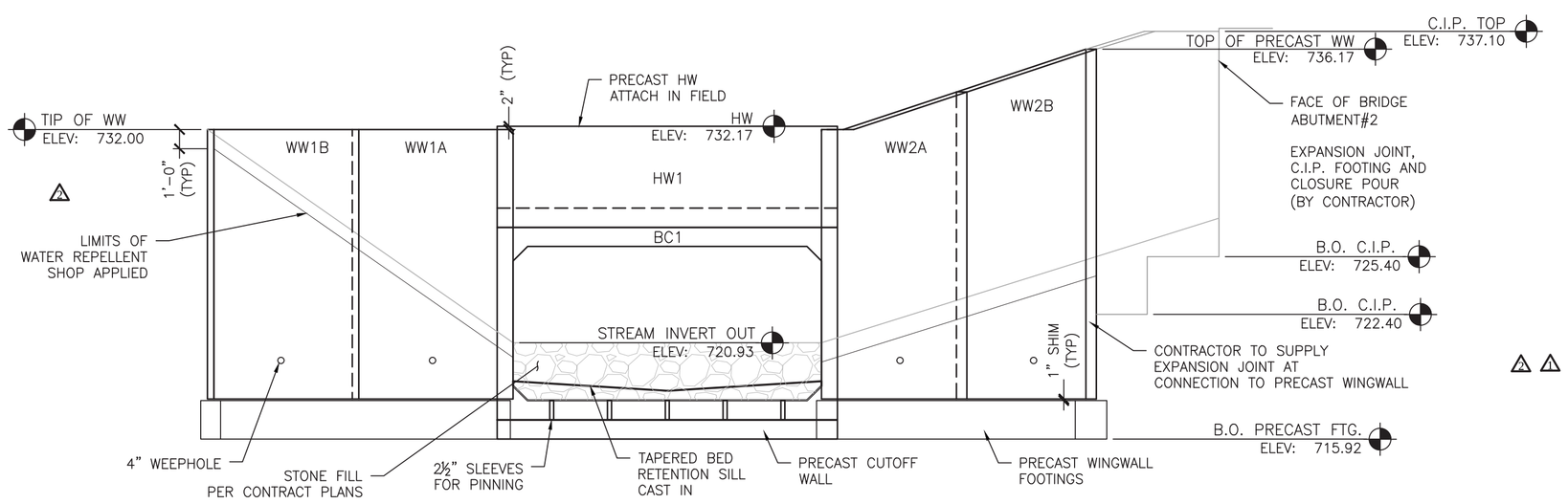

2 S2.0 DOWNSTREAM ELEVATION
3/16" = 1'-0"

GENERAL NOTES:

1. DO NOT SCALE FROM THE DRAWINGS. IF A REQUIRED DIMENSION IS NOT PROVIDED, CONSULT THE ENGINEER.

2. IF ANY OF THE WORK TO BE DONE AS SHOWN ON THE DRAWINGS DOES NOT CORRESPOND WITH THE EXISTING FIELD CONDITIONS, CONTACT THE ENGINEER PRIOR TO PROCEEDING WITH THE WORK IN QUESTION.

3. FIELD-VERIFY ALL ELEVATIONS PRIOR TO THE START OF CONSTRUCTION. IF THERE ARE ANY DISCREPANCIES, CONSULT THE ENGINEER PRIOR TO PROCEEDING WITH THE WORK IN QUESTION.

4. MAINTAIN MINIMUM 60 DEGREE SLING ANGLE WHEN HANDLING PRECAST COMPONENENTS.

△1 5. PRECAST COMPONENTS SHALL ACHIEVE MINIMUM DESIGN COMPRESSIVE STRENGTH PRIOR TO SHIPPING, UNLESS OTHERWISE APPROVED BY THE ENGINEER. STRIPPING STRENGTH SHALL BE 3,000PSI

△1 6. ALL HORIZONTAL SURFACE VOIDS SHALL BE FILLED WITH AN APPROVED NON-SHRINK GROUT. VERTICAL SURFACE VOIDS SHALL BE FILLED WITH FOAM SEALANT.

7. SHOP DRAWINGS WERE DEVELOPED USING THE FOLLOWING RESOURCES FOR THE CONTRACT: PROPOSED IMPROVEMENT BRIDGE PROJECT, TOWN OF JAMAICA, COUNTY OF WINDHAM, DATED 12/5/2012. PREPARED BY STATE OF VERMONT AGENCY OF TRANSPORTATION.

8. IF THERE IS ADDITIONAL INFORMATION PERTINENT TO THE FABRICATION AND INSTALLATION OF THESE UNITS THAT IS NOT CONTAINED WITHIN THE RESOURCES LISTED ABOVE IT SHALL BE BROUGHT TO THE ATTENTION OF MICHIE CORPORATION. FAILURE TO MAKE SUCH ADDITIONAL INFORMATION AVAILABLE SHALL RELIEVE MICHIE CORPORATION OF ALL LIABILITIES ARISING FROM ERRORS OR OMISSIONS RELATED TO THE OMITTED INFORMATION.

BOX CULVERT NOTES

1. BOX CULVERT SECTIONS ARE DESIGNED IN ACCORDANCE WITH
- AASHTO "LRFD BRIDGE DESIGN SPECIFICATIONS", 2012.
- VTRANS 2011 "STANDARD SPECIFICATIONS FOR CONSTRUCTION".

2. THE FOLLOWING CRITERIA WAS USED FOR DESIGN:
LIVE LOAD: HL-93
EARTH COVER: 3-7.5 FEET
BACKFILL SOIL UNIT WEIGHT: 140 PCF
△1 NOMINAL BEARING RESISTANCE PER EMAIL CLARIFICATION 5/23/13 FOR EFFECTIVE FOOTING WIDTH OF 6FT:
6.2 KSF (SERVICE LIMIT STATE, RESISTANCE FACTOR = 1.0)
14.0 KSF (STRENGTH LIMIT STATE, RESISTANCE FACTOR = 0.45)
MIN LATERAL EARTH PRESSURE: 35 PSF
MAX LATERAL EARTH PRESSURE: 70 PSF

3. CONCRETE SHALL BE SELF-CONSOLIDATING CONFORMING TO ASTM C260 WITH A MINIMUM 28-DAY COMPRESSIVE STRENGTH OF 5,000 PSI. MIX DESIGN TO BE MICHIE #1953CAX. AGGREGATE SHALL CONFORM TO ASTM C-33 WITH A MAXIMUM DIAMETER OF 3/4". CEMENT SHALL CONFORM TO ASTM C150.

4. REINFORCING IN BOX CULVERT SHALL BE GRADE 60 DEFORMED BLACK BARS CONFORMING TO ASTM A-615. ALL BARS SHALL BE BENT COLD.

5. ALL EXPOSED EDGES EXCEPT WHERE NOTED SHALL BE CHAMFERED 3/4".

6. UNLESS OTHERWISE SPECIFIED IN THE CONTRACT DOCUMENTS, SUBGRADE PREPARATION SHALL CONFORM TO VTRANS 204.07 BEDDING FOR STRUCTURES. FOOTINGS SHALL BE PLACED AT ELEVATIONS SHOWN ON A MINIMUM OF 1'-0" OF CRUSHED STONE CONFORMING TO VTRANS 704.05(A). ALL TOPSOIL, LOOSE FILL, AND DELETERIOUS MATERIALS SHALL BE REMOVED BEFORE PLACING MATERIAL.

7. UNLESS OTHERWISE SPECIFIED IN THE CONTRACT DOCUMENTS, BACKFILL MATERIAL SHALL CONFORM TO VTRANS SECTION 704.08 GRANULAR BACKFILL FOR STRUCTURES. BACKFILL SHALL EXTEND FOR A MINIMUM DISTANCE OF 3'-0" BEYOND THE HORIZONTAL LIMITS OF THE STRUCTURE. PLACEMENT SHALL CONFORM TO VTRANS SECTION 204.08.

△1 △2 8. EXPOSED SURFACES SHALL BE COATED WITH VTRANS APPROVED WATER REPELLENT PER CONTRACT DOCUMENTS (SHOP APPLIED).

9. EACH SECTION SHALL BE PROVIDED WITH BOLT POCKETS FOR ATTACHMENT TO ADJACENT SECTIONS. 7/8" DIA. GALV. THREADED ROD, WASHERS AND NUTS SHALL BE PROVIDED FOR ASSEMBLY IN THE FIELD. CLOSED-CELL NEOPRENE JOINT SEALANT SHALL BE USED IN ALL JOINTS UNLESS NOTED OTHERWISE.

10. ROYSTON JOINT WRAP WITH ADHESIVE PROVIDED BY MICHIE CORP, INSTALLED BY OTHERS. BARRIER MEMBRANE PER CONTRACT DOCUMENTS.

WING WALL FOOTING NOTES:

△1 1. CONCRETE SHALL BE SELF-CONSOLIDATING CONFORMING TO ASTM C260 WITH A MINIMUM 28-DAY COMPRESSIVE STRENGTH OF 5,000 PSI. MIX DESIGN TO BE MICHIE #1953CAX. AGGREGATE SHALL CONFORM TO ASTM C-33 WITH A MAXIMUM DIAMETER OF 3/4". CEMENT SHALL CONFORM TO ASTM C150.

2. REINFORCING SHALL BE GRADE 60 DEFORMED BLACK BARS CONFORMING TO ASTM A-615. ALL BARS SHALL BE BENT COLD.

3. ALL EXPOSED EDGES EXCEPT WHERE NOTED SHALL BE CHAMFERED 3/4".

4. UNLESS OTHERWISE SPECIFIED IN THE CONTRACT DOCUMENTS, SUBGRADE PREPARATION SHALL CONFORM TO VTRANS 204.07 BEDDING FOR STRUCTURES. FOOTINGS SHALL BE PLACED AT ELEVATIONS SHOWN ON A MINIMUM OF 1'-0" OF CRUSHED STONE CONFORMING TO VTRANS 704.05(A). ALL TOPSOIL, LOOSE FILL, AND DELETERIOUS MATERIALS SHALL BE REMOVED BEFORE PLACING BACKFILL.

5. UNLESS OTHERWISE SPECIFIED IN THE CONTRACT DOCUMENTS, BACKFILL MATERIAL SHALL CONFORM TO VTRANS SECTION 704.08 GRANULAR BACKFILL FOR STRUCTURES. PLACEMENT SHALL CONFORM TO VTRANS SECTION 204.08.

△1 WING WALL PANEL AND ANCHOR NOTES:

1. SECTIONS ARE DESIGNED IN ACCORDANCE WITH
- AASHTO "LRFD BRIDGE DESIGN SPECIFICATIONS", 2012
- VTRANS 2011 "STANDARD SPECIFICATIONS FOR CONSTRUCTION".

2. THE FOLLOWING PROPERTIES WERE USED IN THE DESIGN:

	SOIL WEIGHT [PCF]	FRICTION ANGLE [DEG]
RETAINED SOIL	140	34
FOUNDATION SOIL	140	35

△1 3. CONCRETE SHALL BE SELF-CONSOLIDATING CONFORMING TO ASTM C260 WITH A MINIMUM 28-DAY COMPRESSIVE STRENGTH OF 5,000 PSI. MIX DESIGN TO BE MICHIE #1953CAD WITH DCI CORROSION INHIBITOR. AGGREGATE SHALL CONFORM TO ASTM C-33 WITH A MAXIMUM DIAMETER OF 3/4". CEMENT SHALL CONFORM TO ASTM C150.

△1 4. REINFORCING IN WINGWALLS SHALL BE EPOXY COATED REINFORCING CONFORMING TO VTRANS SECTION 507. CHAIRS, SPACERS, AND TIES IN AREAS OF EPOXY COATEDREINFORCING SHALL BE PLASTIC OR EPOXY COATED. ALL BARS SHALL BE ALL BARS SHALL BE BENT COLD.

5. ALL EXPOSED EDGES EXCEPT WHERE NOTED SHALL BE CHAMFERED 3/4".

△1 6. UNLESS OTHERWISE SPECIFIED IN THE CONTRACT DOCUMENTS, BACKFILL MATERIAL SHALL CONFORM TO VTRANS SECTION 704.08 GRANULAR BACKFILL FOR STRUCTURES. PLACEMENT SHALL CONFORM TO VTRANS SECTION 204.08. SEE DETAIL 1/S10 FOR SELECT BACKFILL BEHIND WINGS FOR DRAINAGE.

△1 △2 7. EXPOSED SURFACES SHALL BE COATED WITH VTRANS APPROVED WATER REPELLENT PER CONTRACT DOCUMENTS (SHOP APPLIED).

HEADWALL NOTES:

1. PRECAST REINFORCED HEADWALLS ARE DESIGNED IN ACCORDANCE WITH AASHTO "LRFD BRIDGE DESIGN SPECIFICATIONS" 2012

2. THE FOLLOWING SOIL PROPERTIES WERE USED IN THE DESIGN:

	SOIL WEIGHT [PCF]	FRICTION ANGLE [DEG]
RETAINED SOIL	140	34
FOUNDATION		40

△1 3. HEADWALL CONCRETE SHALL BE SELF-CONSOLIDATING CONFORMING TO ASTM C260 WITH A MINIMUM 28-DAY COMPRESSIVE STRENGTH OF 5,000 PSI. MIX DESIGN TO BE MICHIE #1953CAD WITH DCI CORROSION INHIBITOR. AGGREGATE SHALL CONFORM TO ASTM C-33 WITH A MAXIMUM DIAMETER OF 3/4". CEMENT SHALL CONFORM TO ASTM C150.

△1 4. REINFORCING IN HEADWALLS SHALL BE EPOXY COATED REINFORCING CONFORMING TO VTRANS SECTION 507. CHAIRS, SPACERS, AND TIES IN AREAS OF EPOXY COATEDREINFORCING SHALL BE PLASTIC OR EPOXY COATED. ALL BARS SHALL BE BENT COLD.

5. ALL EXPOSED EDGES EXCEPT WHERE NOTED SHALL BE CHAMFERED 3/4".

6. UNLESS OTHERWISE SPECIFIED IN THE CONTRACT DOCUMENTS, BACKFILL MATERIAL SHALL CONFORM TO VTRANS SECTION 704.08 GRANULAR BACKFILL FOR STRUCTURES. PLACEMENT SHALL CONFORM TO VTRANS SECTION 204.08.

△1 △2 7. EXPOSED SURFACES SHALL BE COATED WITH VTRANS APPROVED WATER REPELLENT PER CONTRACT DOCUMENTS (SHOP APPLIED).

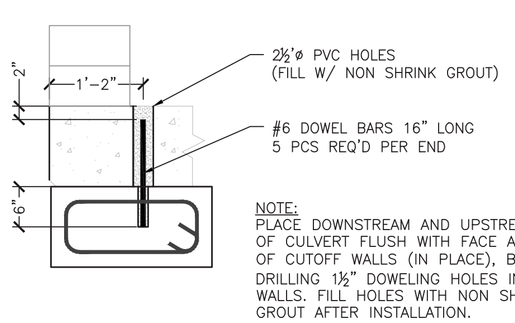

3 S2.0 CUTOFF WALL CONNECTION
¾"= 1'

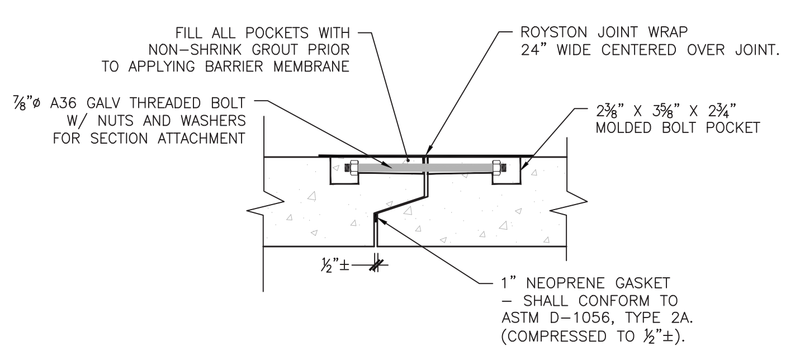

4 S2.0 BOX CULVERT JOINT CONNECTION DETAIL
1" = 1'-0"

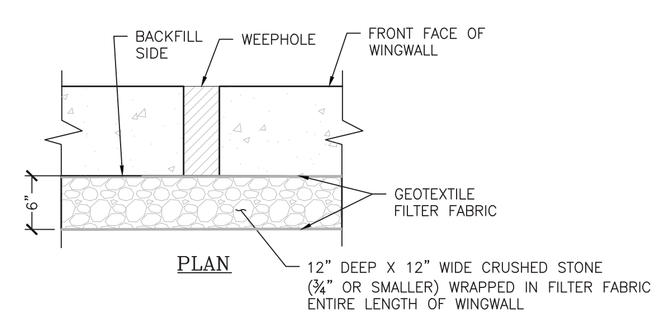

△1
5 S2.0 WEEPHOLE BACKFILL DETAIL
1" = 1'-0"

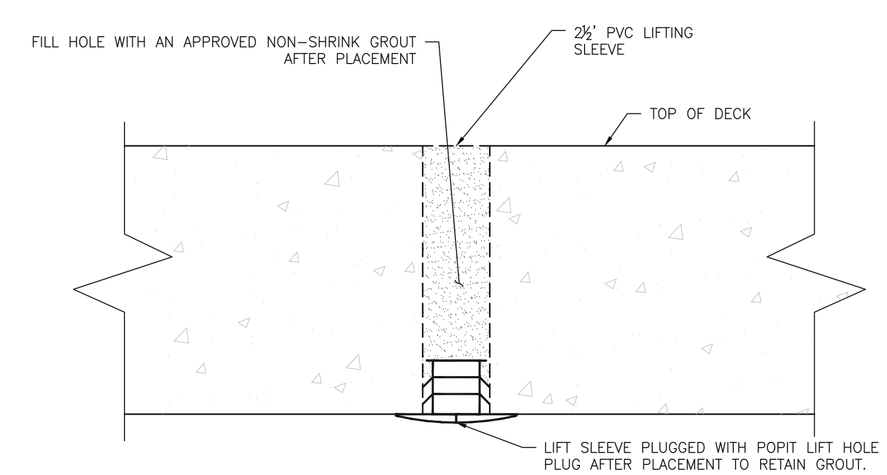

△1
4 S1.0 PLUG DETAIL FOR PVC LIFTING SLEEVES
3" = 1'-0"

No.	Date	Revision	By
△1		EOR Comments	P.I.L.
△2		EOR Comments	P.I.L.

STATE OF VERMONT
THOMAS A. FRENCH
NO. 8871
STRUCTURAL
LICENSED
PROFESSIONAL ENGINEER
08.22.13

MICHIE CORPORATION, INC.
173 BUXTON INDUSTRIAL DRIVE-PO BOX 870
HENNIKER, NH 03242
PHONE: 603-428-3218
FAX: 603-428-7426

Fire Drive off VT Rte. 30
VAOT #ER-BRF 015-1(23)
Jamaica, VT
16'x8' Box Culvert - Elevations & Connection Details

Scale: AS SHOWN
Checked by: TAF
Drawn by: PDH
Designed by: P.I.L.
Project No. 3745

Prepared for:
Bazin Brothers Trucking
2425 Back Westminster Road
Westminster, VT 05158

DWG NO.
S2.0

BC2 REINFORCING SCHEDULE (COUNTS REFLECT 1 UNIT)								
LOCATION	MARK	QTY	SIZE	SPACING	TYPE	CUT LENGTH	HORIZ. LEG	VERT. LEG
TOP SLAB (INT)	A100	10	#7	6"	STRAIGHT	17'–4"		
BOT. SLAB (INT)	A200	10	#7	6"	STRAIGHT	17'–4"		
TOP SLAB (EXT)	A300	5	#4	12"	STRAIGHT	17'–4"		
BOT. SLAB (EXT)	A400	5	#4	12"	STRAIGHT	17'–4"		
WALL (EXT)	A1	20	#6	6"	"U" BARS	18'–5" UNBENT		
WALL (INT)	B1	16	#5	8"	STRAIGHT	9'–8"		
LONGIT. TOP (EXT)	C1	18	#4	12"	STRAIGHT	4'–8½"		
LONGIT. TOP (INT)	C100	18	#4	12"	STRAIGHT	4'–8½"		
LONGIT. BOT. (INT)	C200	18	#4	12"	STRAIGHT	4'–8½"		
LONGIT. BOT (EXT)	C1	18	#4	12"	STRAIGHT	4'–8½"		
LONGIT. WALL (EXT)	C1	16	#4	12"	STRAIGHT	4'–8½"		
LONGIT. WALL (INT)	C1	16	#4	12"	STRAIGHT	4'–8½"		

BC1 REINFORCING SCHEDULE (COUNTS REFLECT 1 UNIT)								
LOCATION	MARK	QTY	SIZE	SPACING	TYPE	CUT LENGTH	HORIZ. LEG	VERT. LEG
TOP SLAB (INT)	A100	10	#7	6"	STRAIGHT	17'–4"		
BOT. SLAB (INT)	A200	10	#7	6"	STRAIGHT	17'–4"		
TOP SLAB (EXT)	A300	5	#4	12"	STRAIGHT	17'–4"		
BOT. SLAB (EXT)	A400	5	#4	12"	STRAIGHT	17'–4"		
WALL (EXT)	A1	20	#6	6"	"U" BARS	18'–5" UNBENT		
WALL (INT)	B1	16	#5	8"	STRAIGHT	9'–8"		
LONGIT. TOP (EXT)	C1	18	#4	12"	STRAIGHT	4'–3¼"		
LONGIT. TOP (INT)	C100	18	#4	12"	STRAIGHT	4'–0¼"		
LONGIT. BOT. (INT)	C200	18	#4	12"	STRAIGHT	4'–4¾"		
LONGIT. BOT (EXT)	C1	18	#4	12"	STRAIGHT	4'–7¾"		
LONGIT. WALL (EXT)	C1	16	#4	12"	STRAIGHT	VARIES 4'–7¾" TO 4'–3¼"		
LONGIT. WALL (INT)	C1	16	#4	12"	STRAIGHT	VARIES 4'–4¾" TO 4'–0¼"		

BC3 REINFORCING SCHEDULE (COUNTS REFLECT 1 UNIT)								
LOCATION	MARK	QTY	SIZE	SPACING	TYPE	CUT LENGTH	HORIZ. LEG	VERT. LEG
TOP SLAB (INT)	A100	10	#7	6"	STRAIGHT	17'–4"		
BOT. SLAB (INT)	A200	10	#7	6"	STRAIGHT	17'–4"		
TOP SLAB (EXT)	A300	5	#4	12"	STRAIGHT	17'–4"		
BOT. SLAB (EXT)	A400	5	#4	12"	STRAIGHT	17'–4"		
WALL (EXT)	A1	20	#6	6"	"U" BARS	18'–5" UNBENT		
WALL (INT)	B1	16	#5	8	STRAIGHT	9'–8"		
LONGIT. TOP (EXT)	C1	18	#4	12"	STRAIGHT	4'–8½"		
LONGIT. TOP (INT)	C100	18	#4	12"	STRAIGHT	4'–11½"		
LONGIT. BOT. (INT)	C200	18	#4	12"	STRAIGHT	4'–7"		
LONGIT. BOT (EXT)	C1	18	#4	12"	STRAIGHT	4'–4"		
LONGIT. WALL (EXT)	C1	16	#4	12"	STRAIGHT	VARIES 4'–8½" TO 4'–4"		
LONGIT. WALL (INT)	C1	16	#4	12"	STRAIGHT	VARIES 4'–11½" TO 4'–7"		

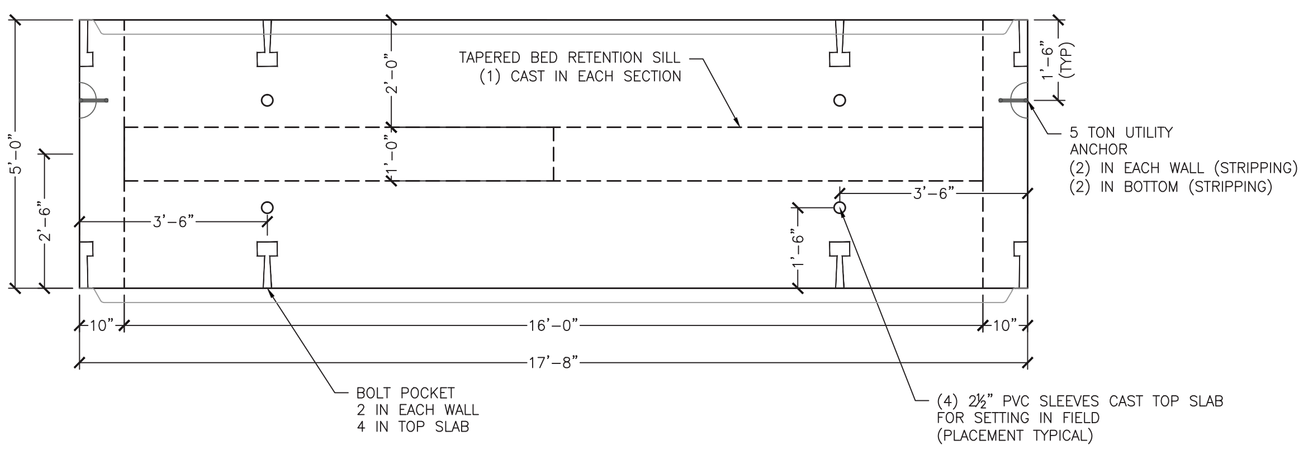

1 S3.0 BC2 PLAN VIEW
½" = 1'–0"

15 REQUIRED
ITEM 281608
UNIT WEIGHT AND VOLUME:40,500#
BC: (9.22CY)
BAFFLE: (0.42CY)

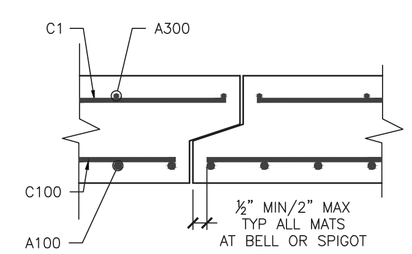

6 S3.0 REINFORCING AT JOINT
1" = 1'–0"

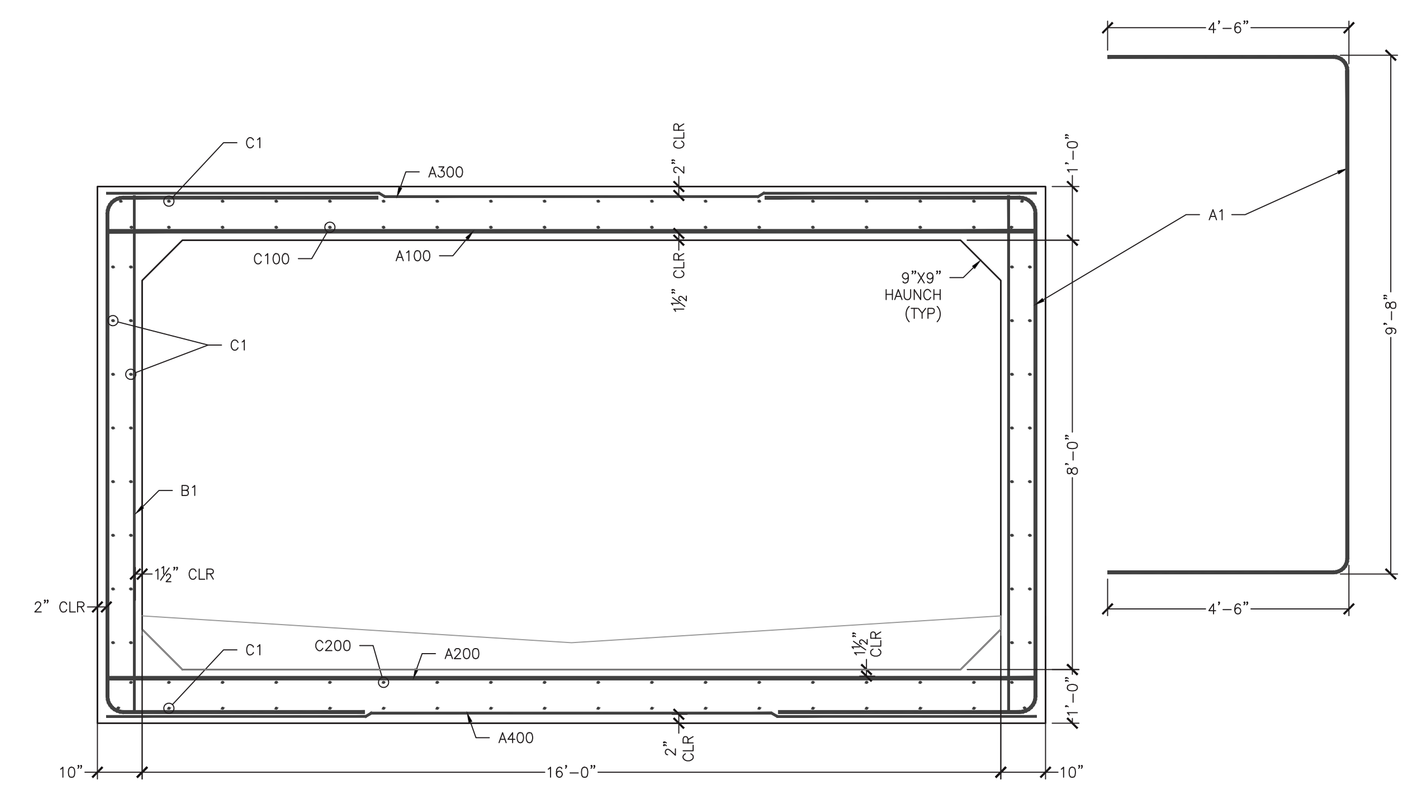

3 S3.0 BC TYPICAL REINFORCING
½" = 1'–0"

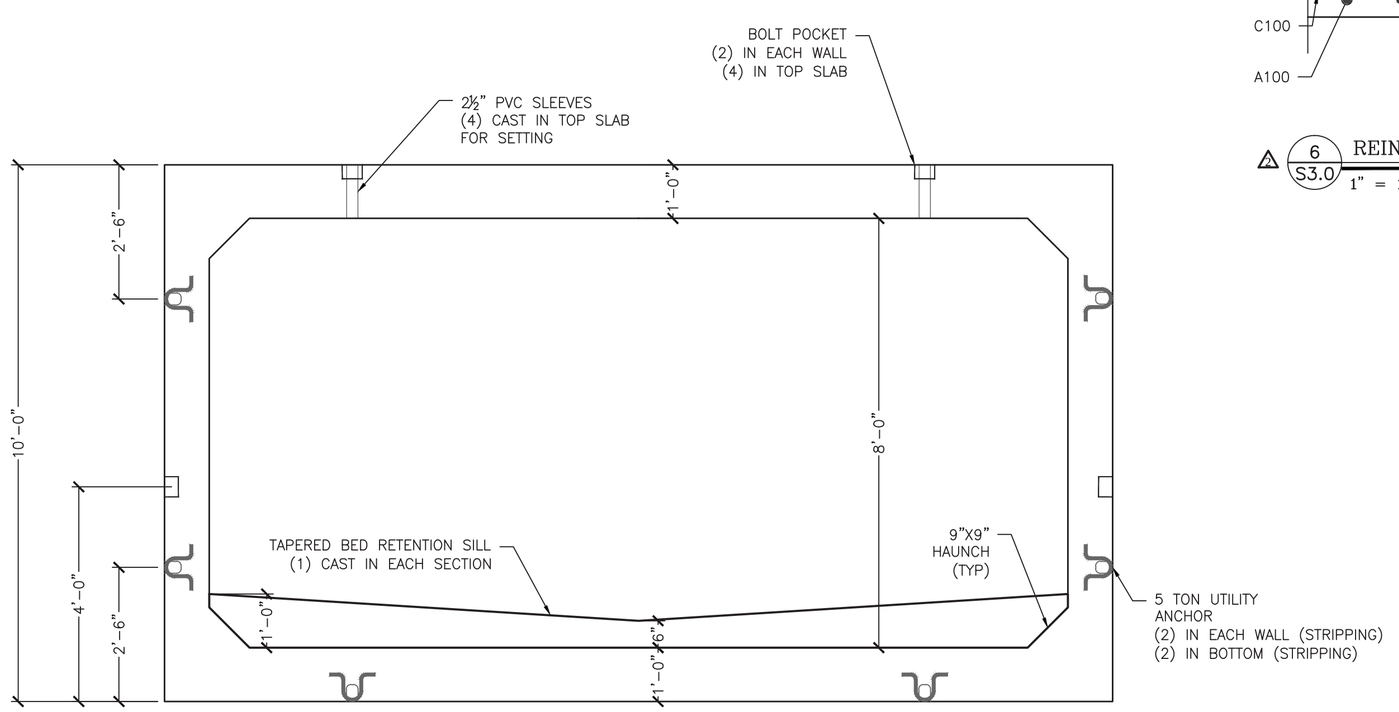

2 S3.0 BC2 ELEVATION
½" = 1'–0"

BAFFLE REINFORCING SCHEDULE (COUNTS REFLECT 1 UNIT)						
LOCATION	QTY	SIZE	SPACING	TYPE	CUT LENGTH	LAP
HORIZONTAL BAR	1	#4	–	STRAIGHT	14'–6"	18"
HORIZONTAL DOWELS	2	#4	–	STRAIGHT	26"	18"
VERTICAL DOWELS	10	#4	18"	STRAIGHT	7" TO 1'–0"	

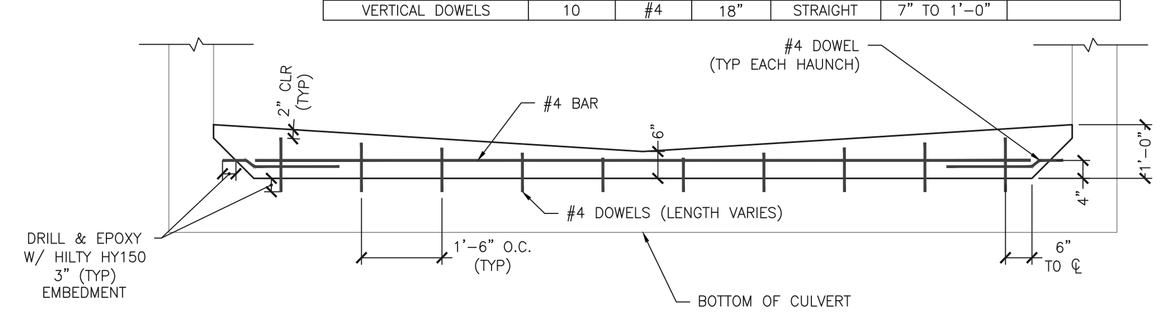

4 S3.0 BED RETENTION SILL (ELEVATION VIEW)
½" = 1'–0"

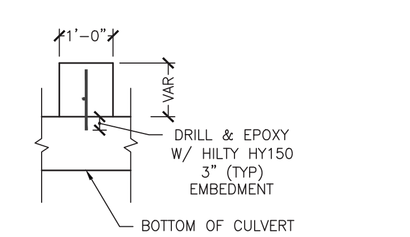

5 S3.0 CROSS SECTION BED RETENTION SILL
1/2" = 1'

No.	Date	Revision	By
		EOR Comments	P.J.L.
		EOR Comments	P.J.L.

STATE OF VERMONT
THOMAS A. FRENCH
NO. 8871
STRUCTURAL
LICENSED
PROFESSIONAL ENGINEER
08.22.13

MICHIE CORPORATION, INC.
173 BUXTON INDUSTRIAL DRIVE-PO BOX 870
HENNIKER, NH 03242
PHONE: 603-428-3218
FAX: 603-428-7426

Fire Drive off VT Rte. 30
VAOT #ER-BRF 015-1(23)
Jamaica, VT
16'x8' Box Culvert - BC2 Details

Scale: AS SHOWN
Checked by: TAF
Drawn by: PDH
Designed by: PJL
Project No. 3745

Prepared for:
Bazin Brothers Trucking
2425 Back Westminster Road
Westminster, VT 05158

DWG NO.
S3.0

NOTE:
ADJUST REINFORCING SPACING AS REQUIRED TO AVOID INSERTS

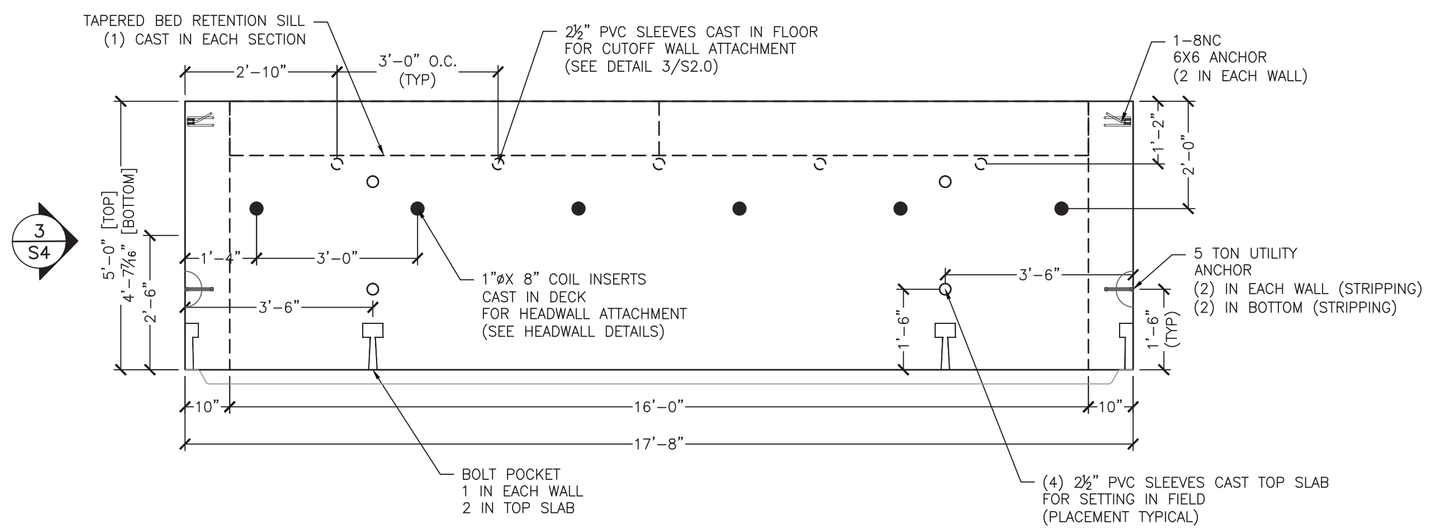

△ 1 S4.0 BC3 PLAN VIEW
½" = 1'-0"

1 REQUIRED
ITEM 281608 IO
UNIT WEIGHT AND VOLUME: 38,560#
BC: (8.76CY)
BAFFLE: (0.42CY)

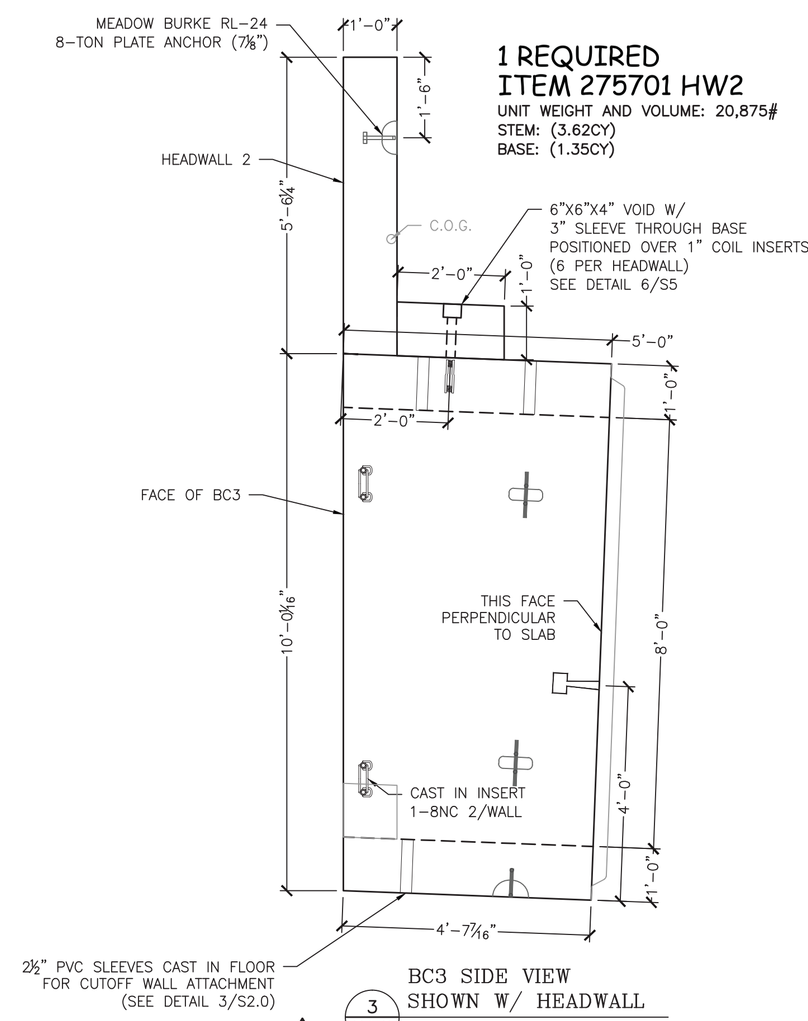

△ 3 S4.0 BC3 SIDE VIEW
SHOWN W/ HEADWALL
½" = 1'-0"

1 REQUIRED
ITEM 275701 HW2
UNIT WEIGHT AND VOLUME: 20,875#
STEM: (3.62CY)
BASE: (1.35CY)

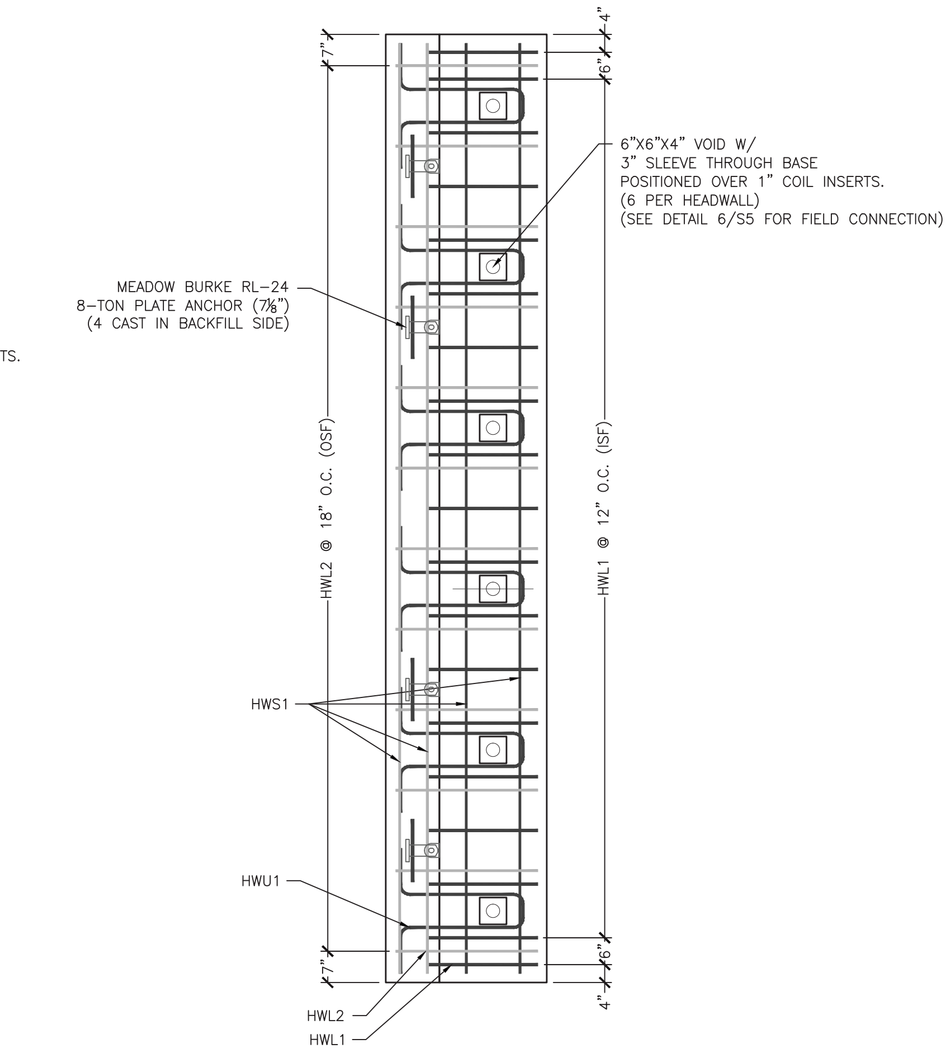

△ 4 S4.0 HW2 PLAN VIEW
½" = 1'-0"

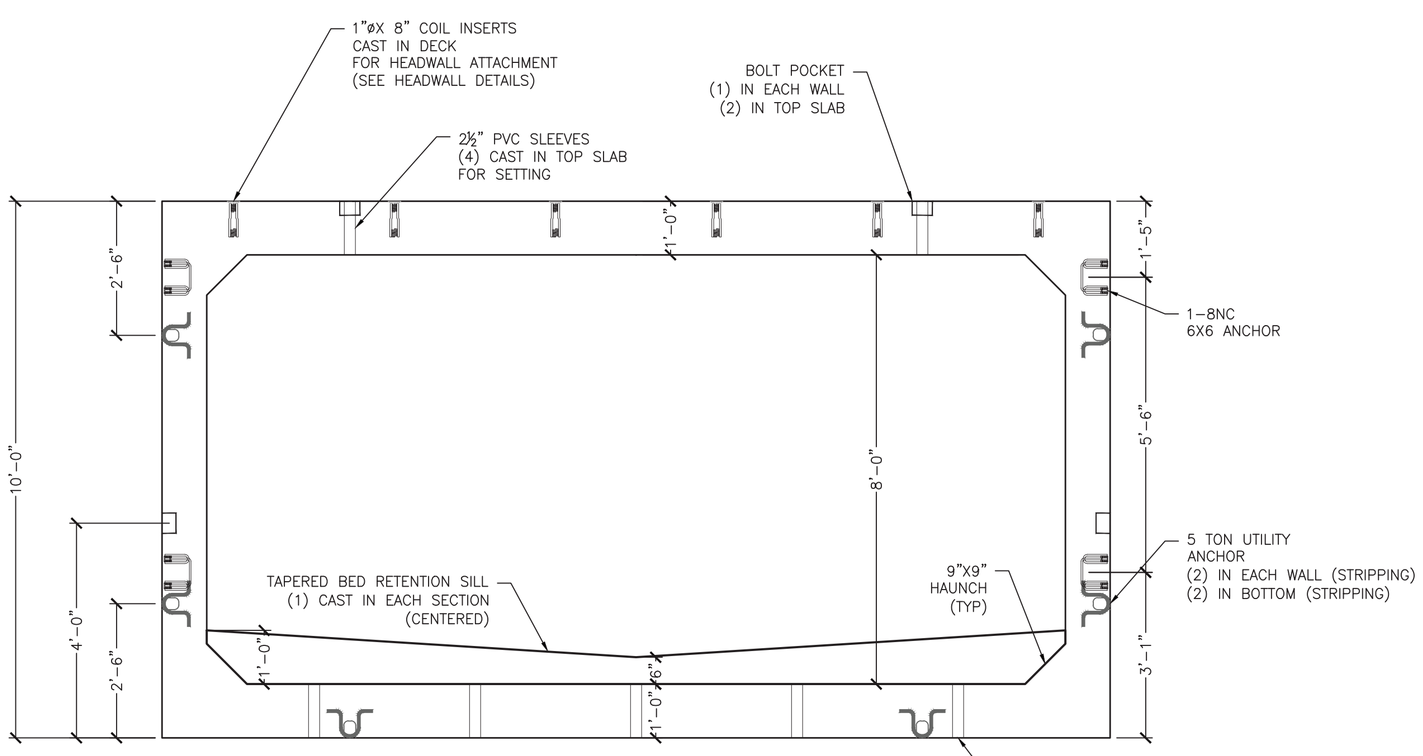

△ 2 S4.0 BC3 ELEVATION
½" = 1'-0"

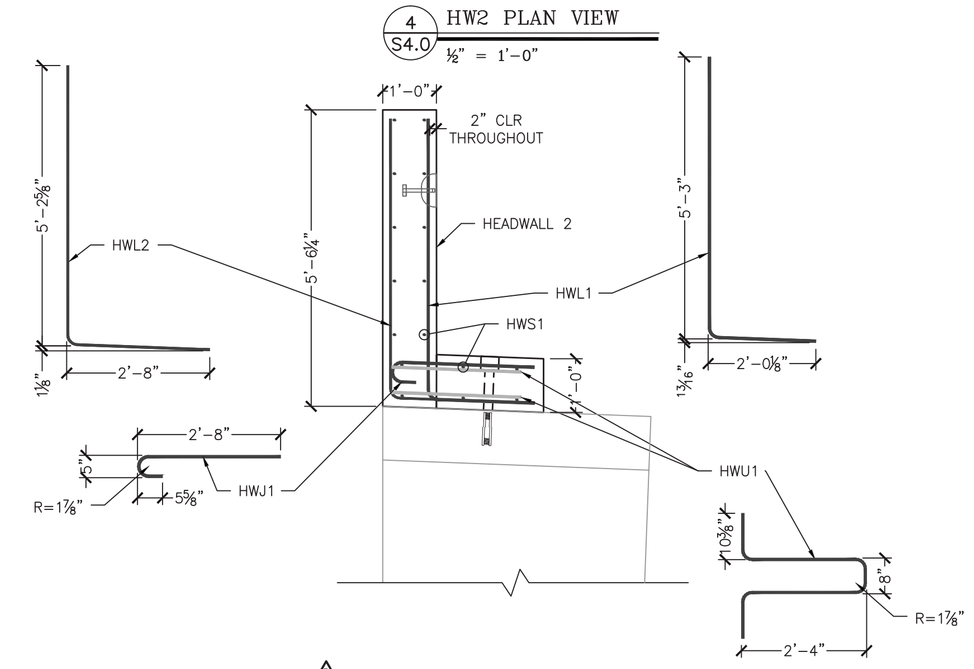

△ 5 S4.0 HW2 REINFORCING
½" = 1'-0"

△ ALL REINFORCING IN THIS DETAIL IS TO BE EPOXY COATED.
CHAIRS, SPACERS, AND TIES IN AREAS OF EPOXY COATED REINFORCING SHALL BE PLASTIC OR EPOXY COATED.

HEADWALL 3 REINFORCING SCHEDULE (COUNTS REFLECT 1 UNIT)

LOCATION	MARK	QTY	SIZE	SPACING	TYPE	CUT LENGTH	
VERTICAL ISF	HWL1	19	#5	12"	"L"	7'-1½"	
VERTICAL OSF	HWL2	12	#5	18"	"L"	7'-9¾"	
LONGITUDINAL (STEM)	HWS1	12	#5	12"	STRAIGHT	17'-4"	
BASE TOP MAT	HWJ1	19	#5	12"	"J"	3'-3½"	
BASE AT SLEEVES	HWU1	6	#5	3'-0"	"U"	6'-7¼"	
LONGITUDINAL (BASE)	HWS1	4	#5	12"	STRAIGHT	17'-4"	

No.	Date	Revision	By
△		EOR Comments	PJL
△		EOR Comments	PJL

STATE OF VERMONT
THOMAS A. FRENCH
NO. 8871
LICENSED PROFESSIONAL ENGINEER
08.22.13

MICHIE CORPORATION, INC.
173 BUXTON INDUSTRIAL DRIVE-PO BOX 870
HENNIKER, NH 03242
PHONE: 603-428-3218
FAX: 603-428-7426

Scale: AS SHOWN
Checked by: TAF
Drawn by: PDH
Designed by: PJL

Fire Drive off VT Rte. 30
VAOT #ER-BRF 015-1(23)
Jamaica, VT
16'x8' Box Culvert - BC3 & HW2 Details

Project No. 3745

Prepared for:
Bazin Brothers Trucking
2425 Back Westminster Road
Westminster, VT 05158

DWG NO.
S4.0

NOTE:
ADJUST REINFORCING SPACING AS REQUIRED TO AVOID INSERTS

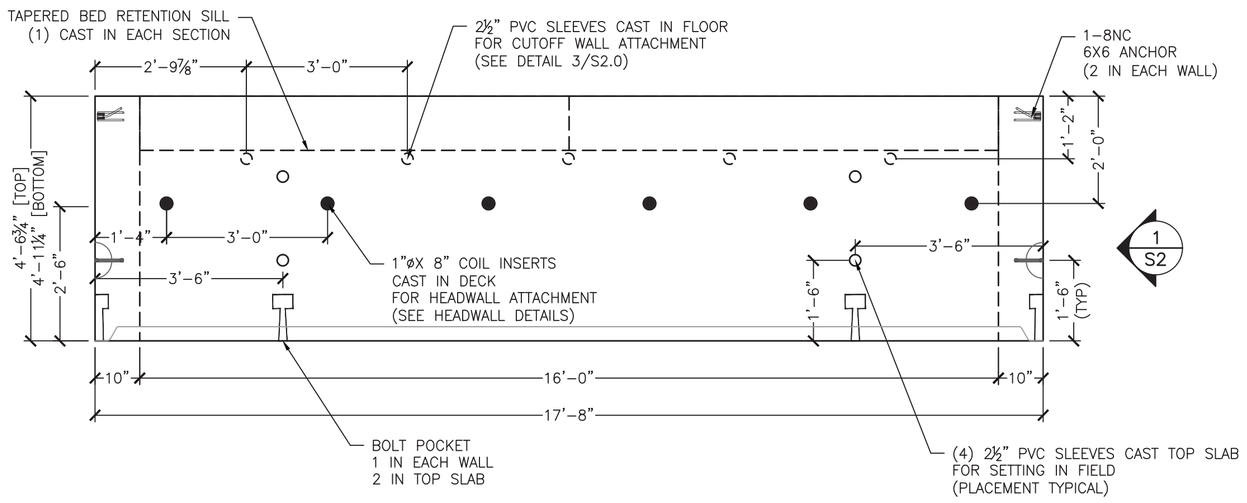

1 / S5.0 BC1 PLAN VIEW
½" = 1'–0"

1 REQUIRED
ITEM 281608
UNIT WEIGHT AND VOLUME: 38,560#
BC: (8.76CY)
BAFFLE: (0.42CY)

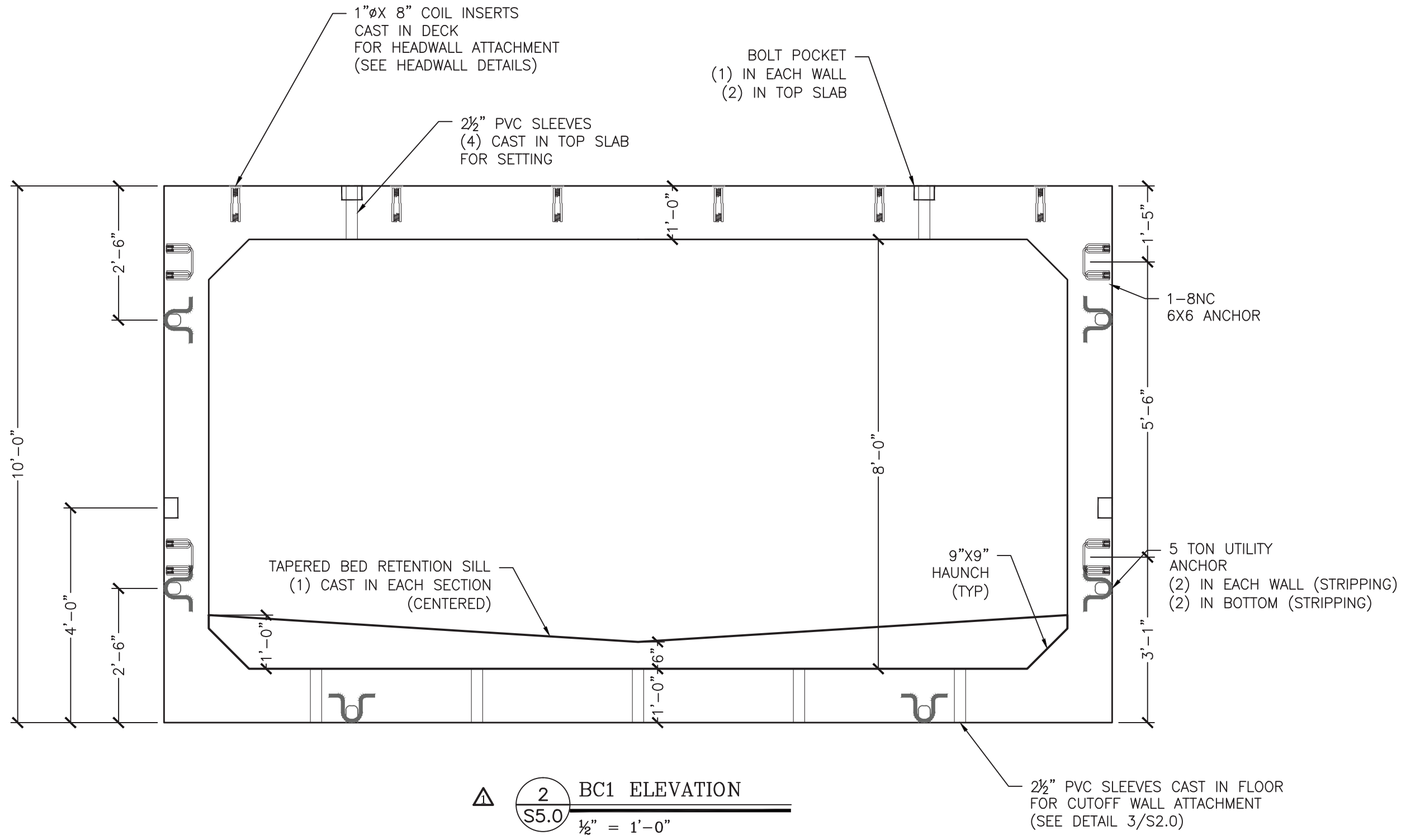

2 / S5.0 BC1 ELEVATION
½" = 1'–0"

1 REQUIRED
ITEM 275701 HW1
UNIT WEIGHT AND VOLUME: 20,000#
STEM: (3.42CY)
BASE: (1.34CY)

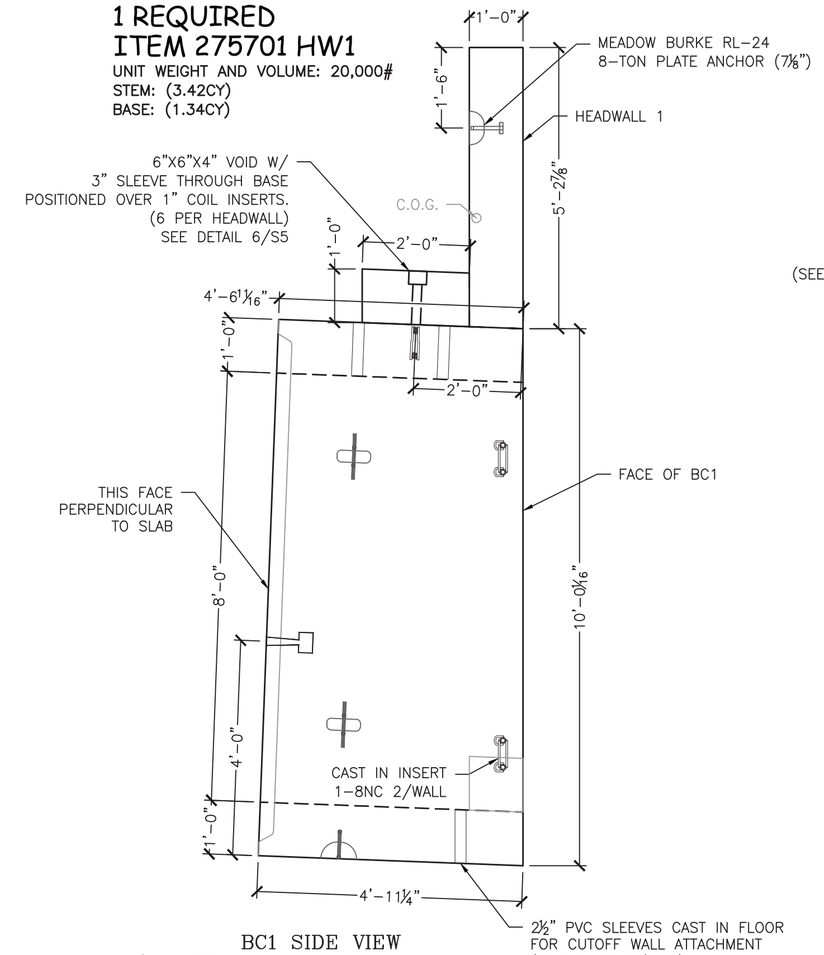

3 / S5.0 BC1 SIDE VIEW
SHOWN W/ HEADWALL
½" = 1'–0"

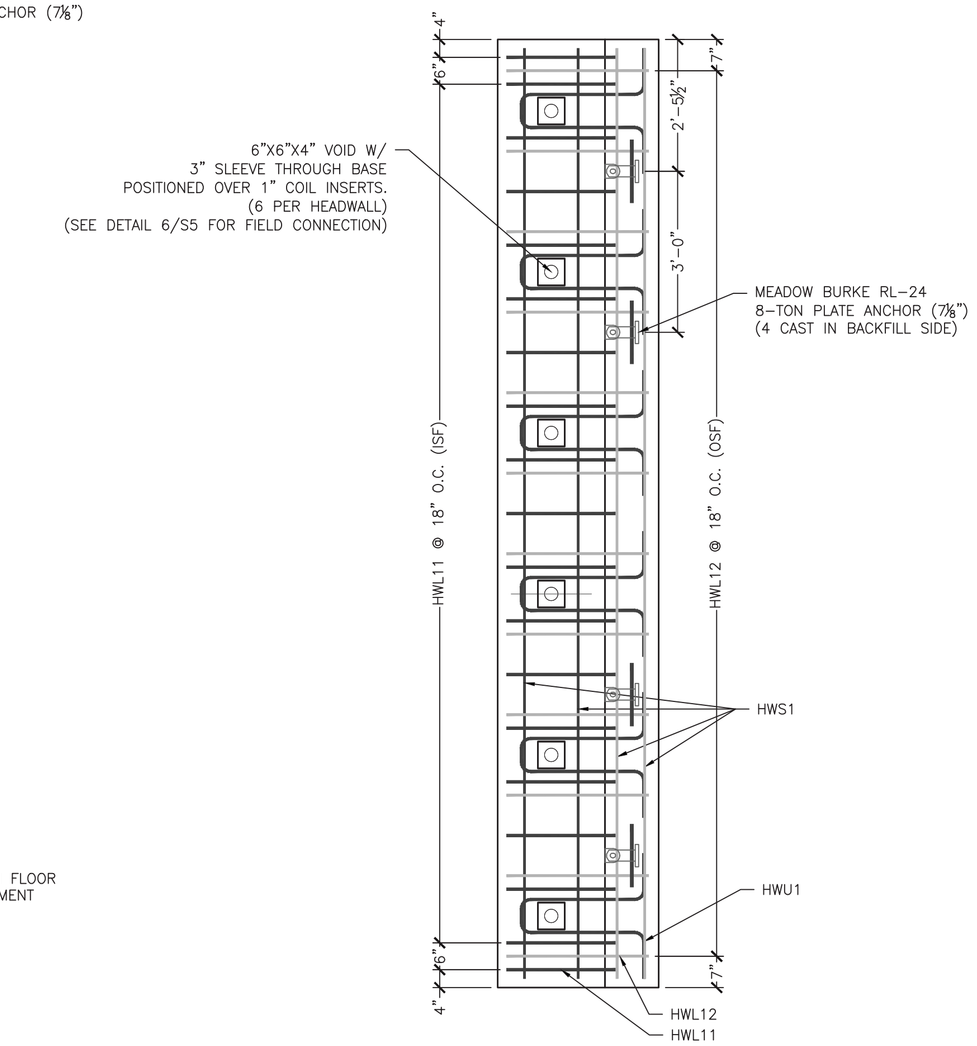

4 / S5.0 HW1 PLAN VIEW
½" = 1'–0"

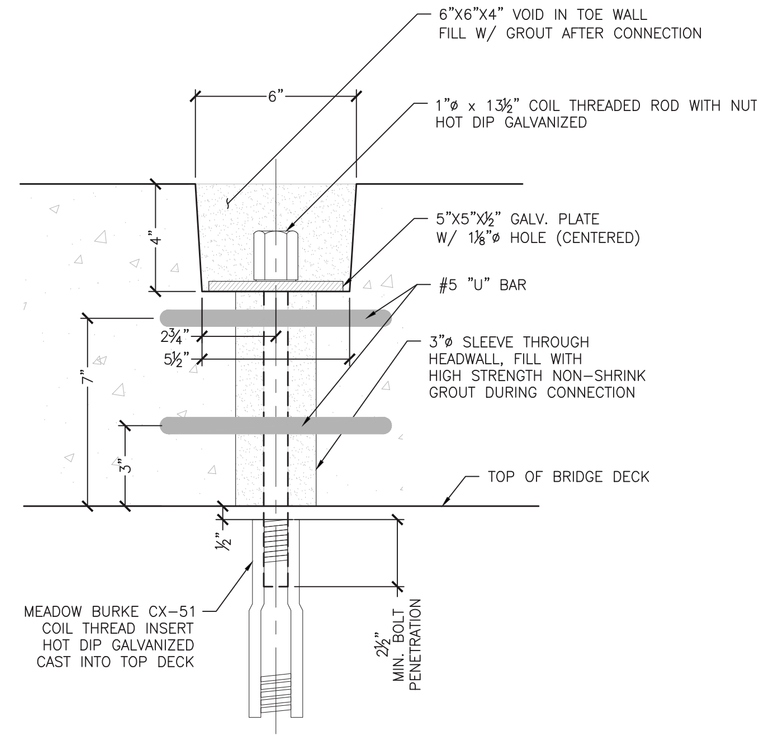

6 / S5.0 HEADWALL ANCHORAGE DETAIL
3" = 1'–0"

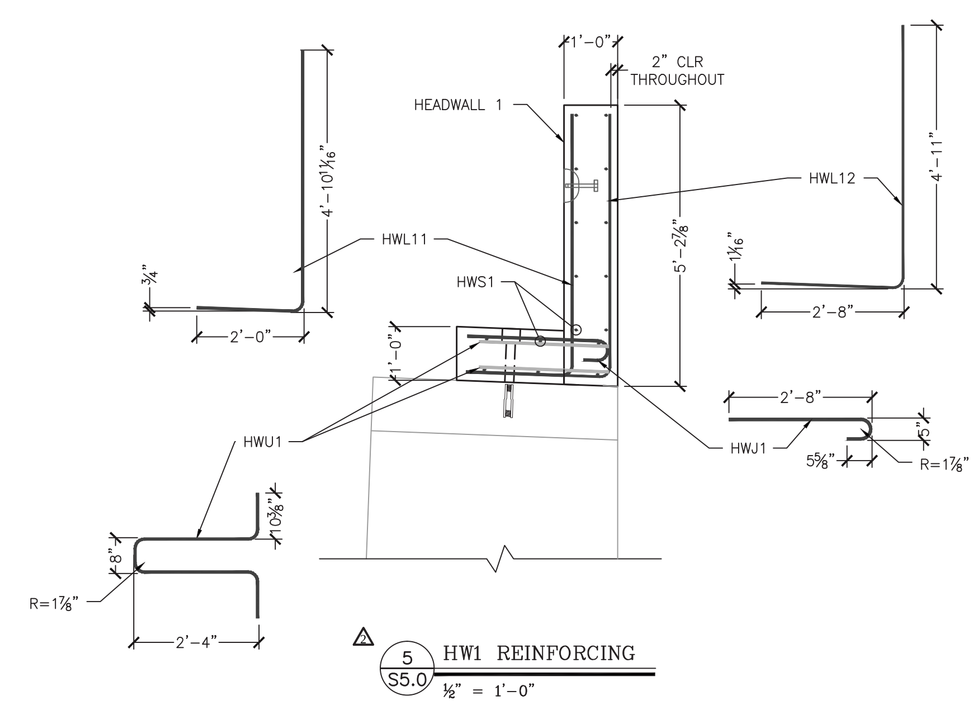

5 / S5.0 HW1 REINFORCING
½" = 1'–0"

ALL REINFORCING IN THIS DETAIL IS TO BE EPOXY COATED.
CHAIRS, SPACERS, AND TIES IN AREAS OF EPOXY COATED REINFORCING SHALL BE PLASTIC OR EPOXY COATED.

HEADWALL 1 REINFORCING SCHEDULE (COUNTS REFLECT 1 UNIT)

LOCATION	MARK	QTY	SIZE	SPACING	TYPE	CUT LENGTH	
VERTICAL ISF	HWL11	19	#5	12"	"L"	6'–9¼"	
VERTICAL OSF	HWL12	12	#5	18"	"L"	7'–5½"	
LONGITUDINAL (STEM)	HWS1	12	#5	12"	STRAIGHT	17'–4"	
BASE TOP MAT	HWJ1	19	#5	12"	"J"	3'–3½"	
BASE AT SLEEVES	HWU1	6	#5	3'–0"	"U"	6'–7¼"	
LONGITUDINAL (BASE)	HWS1	4	#5	12"	STRAIGHT	17'–4"	

No.	Date	Revision	By
1		EOR Comments	PJL
2		EOR Comments	PJL

STATE OF VERMONT
THOMAS A. FRENCH
NO. 8871
STRUCTURAL
LICENSED PROFESSIONAL ENGINEER
08.22.13

MICHIE CORPORATION, INC.
173 BUXTON INDUSTRIAL DRIVE-PO BOX 870
HENNIKER, NH 03242
PHONE: 603-428-3218
FAX: 603-428-7426

Fire Drive off VT Rte. 30
VAOT #ER-BRF 015-1(23)
Jamaica, VT
16'x8' Box Culvert - BC1 & HW1 Details

Scale: AS SHOWN
Checked by: TAF
Drawn by: PDH
Designed by: PJL
Project No. 3745

Prepared for:
Bazin Brothers Trucking
2425 Back Westminster Road
Westminster, VT 05158

DWG NO.
S5.0

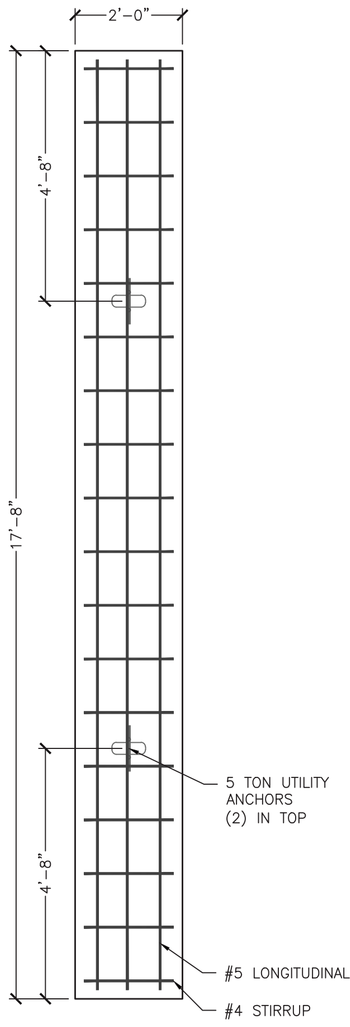

CUTOFF WALL PLAN VIEW

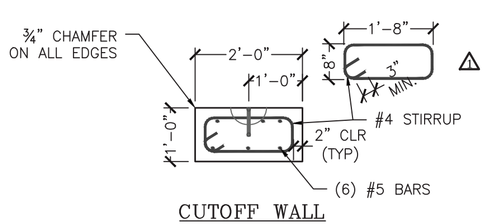

CUTOFF WALL SECTION

1 S6.0 CUTOFF WALL DETAILS
½" = 1'-0"

2 REQUIRED
ITEM 275800
UNIT WEIGHT AND VOLUME:
CUTOFF WALL: 5,500# (1.31CY)

CUTOFF WALL REINFORCING SCHEDULE (COUNTS REFLECT 1 UNIT)							
LOCATION	QTY	SIZE	SPACING	TYPE	CUT LENGTH		
#5 LONGITUDINAL	6	#5	12" MAX	STRAIGHT	17'-4"		
#4 STIRRUP	18	#4	12"	STIRRUP	4'-11¾"		

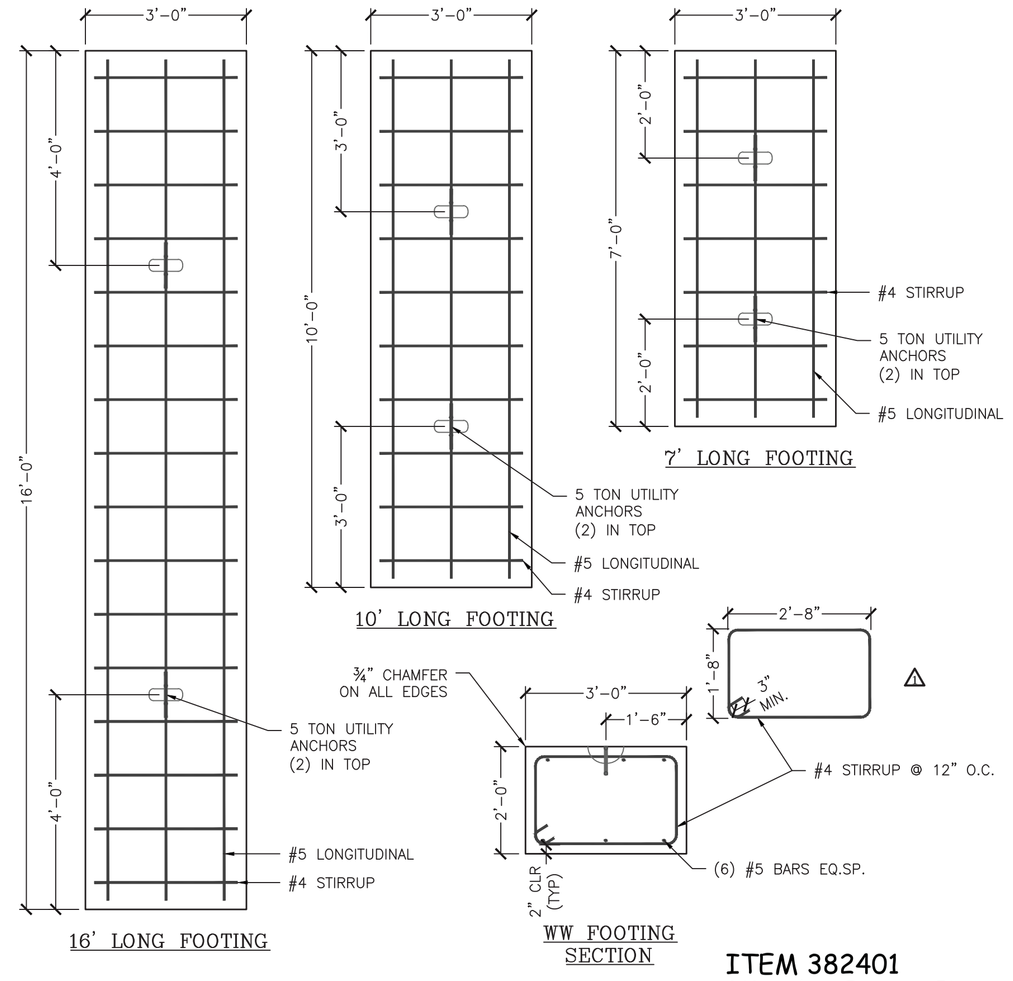

2 S6.0 WINGWALL FOOTING DETAILS
½" = 1'-0"

ITEM 382401
(4) 16' REQUIRED
(1) 10' REQUIRED
(1) 7' REQUIRED
UNIT WEIGHT AND VOLUME:
16': 14,935# (3.56CY)
10': 9,325# (2.22CY)
7': 6,430# (1.56CY)

16' WINGWALL FOOTING REINFORCING SCHEDULE (COUNTS REFLECT 1 UNIT)							
LOCATION	QTY	SIZE	SPACING	TYPE	CUT LENGTH		
#4 LONGITUDINAL	6	#5	12" MAX	STRAIGHT	15'-8"		
#4 STIRRUP	16	#4	12"	STIRRUP	8'-11¾"		

10' WINGWALL FOOTING REINFORCING SCHEDULE (COUNTS REFLECT 1 UNIT)							
LOCATION	QTY	SIZE	SPACING	TYPE	CUT LENGTH		
#4 LONGITUDINAL	6	#5	12" MAX	STRAIGHT	9'-8"		
#4 STIRRUP	10	#4	12"	STIRRUP	8'-11¾"		

7' WINGWALL FOOTING REINFORCING SCHEDULE (COUNTS REFLECT 1 UNIT)							
LOCATION	QTY	SIZE	SPACING	TYPE	CUT LENGTH		
#4 LONGITUDINAL	6	#5	12" MAX	STRAIGHT	6'-8"		
#4 STIRRUP	7	#4	12"	STIRRUP	8'-11¾"		

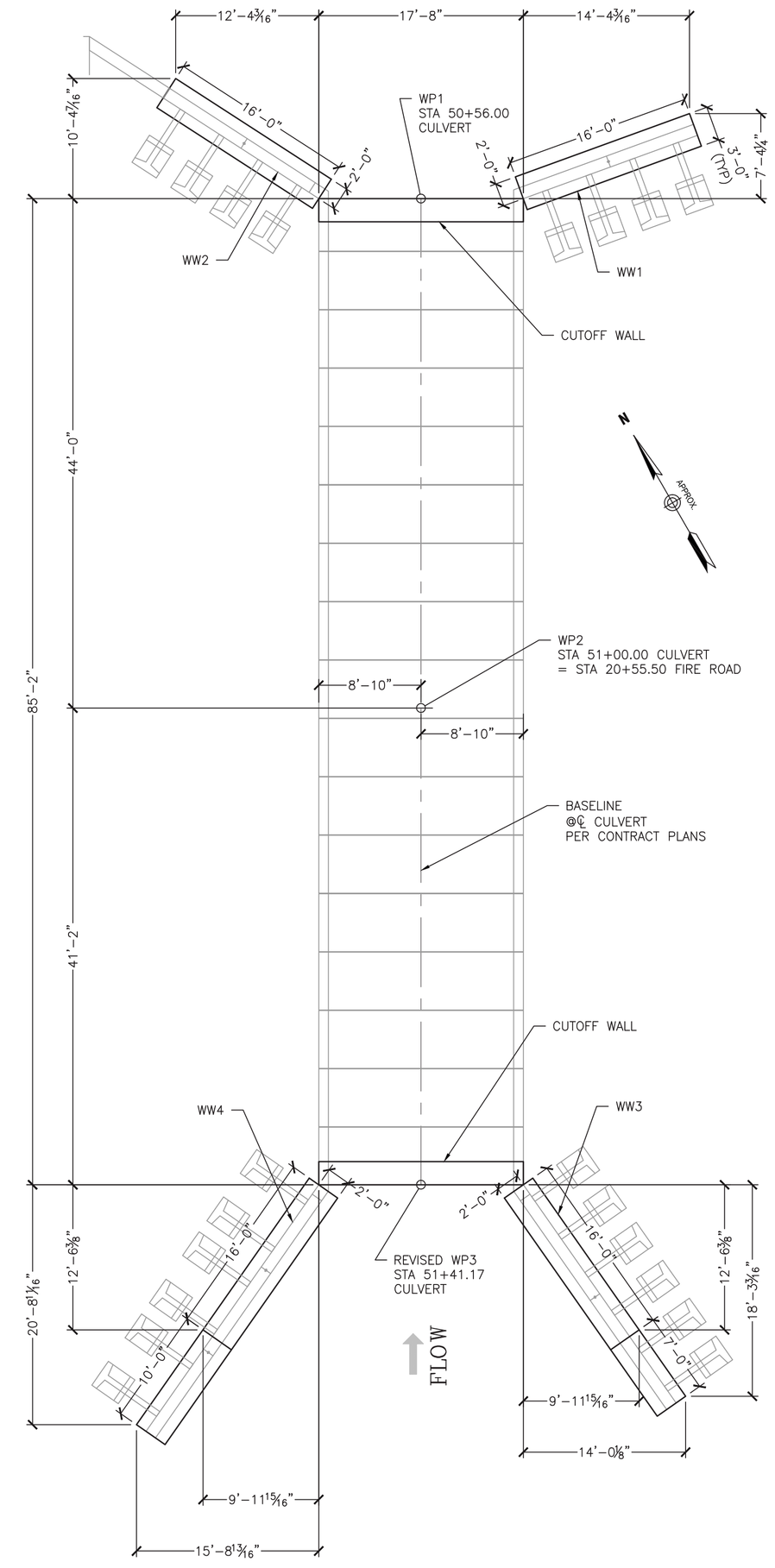

3 S6.0 FOOTING LAYOUT
⅛" = 1'-0"

No.	Date	Revision	By
1		EOR Comments	PJL

STATE OF VERMONT
THOMAS A. FRENCH
NO. 8871
Structural
LICENSED
PROFESSIONAL ENGINEER
08/22/13

MICHIE CORPORATION, INC.
173 BUXTON INDUSTRIAL DRIVE-PO BOX 870
HENNIKER, NH 03242
PHONE: 603-428-3218
FAX: 603-428-7426

Fire Drive off VT Rte. 30
VAOT #ER-BRF 015-1(23)
Jamaica, VT
16'x8' Box Culvert - Footing Details

Scale: AS SHOWN
Checked by: TAF
Drawn by: PDH
Designed by: PJL
Project No. 3745

Prepared for:
Bazin Brothers Trucking
2425 Back Westminster Road
Westminster, VT 05158

DWG NO.
S6.0

ALL REINFORCING IN THIS DETAIL IS TO BE EPOXY COATED.
CHAIRS, SPACERS, AND TIES IN AREAS OF EPOXY COATED REINFORCING SHALL BE PLASTIC OR EPOXY COATED.

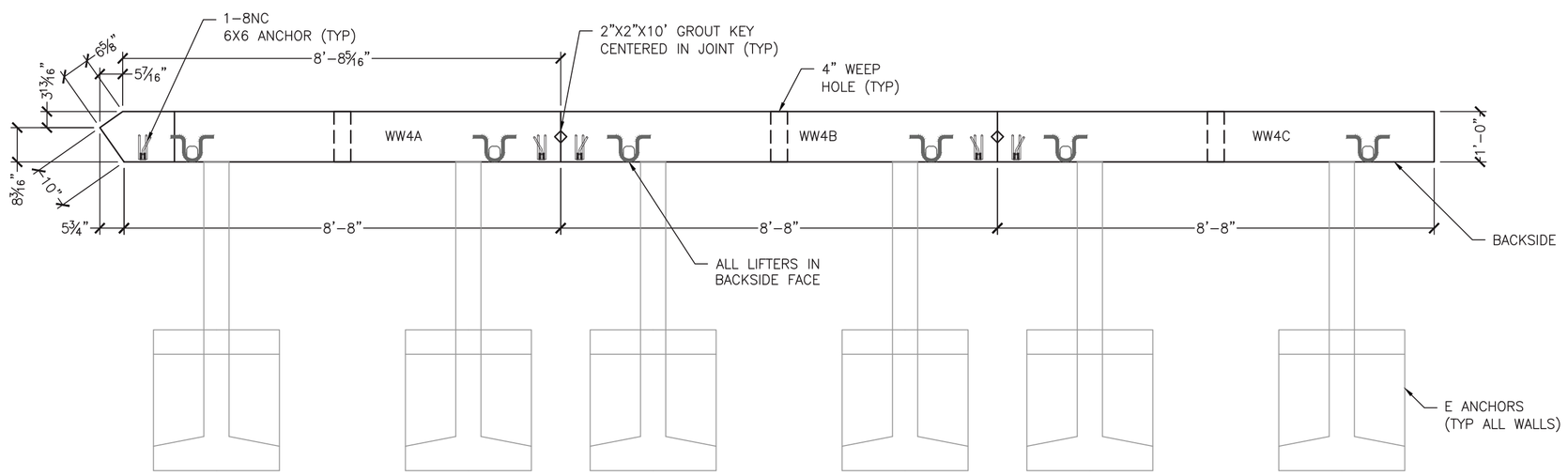

1 / S7.0 WW4A,B&C PLAN VIEW
½" = 1'–0"

WW4A REINFORCING SCHEDULE (COUNTS REFLECT 1 UNIT)					
BAR MARK	LOCATION	TYPE	SIZE/SPACING	CUT LENGTH	# OF PCS
VERTICAL	OSF	STRAIGHT	#5 @ 12"	VARIES 13'–11⅜" TO 14'–6"	9
VERTICAL	ISF	STRAIGHT	#6 @ 7"	VARIES 13'–11⅜" TO 14'–6"	15
HORIZONTAL	OSF	STRAIGHT	#4 @ 12"	8'–4"	15
HORIZONTAL	ISF	STRAIGHT	#4 @ 12"	8'–4"	15
DIAGONAL	FOLLOW SLOPE	STRAIGHT	#4	8'–4¼"	2

WW4B REINFORCING SCHEDULE (COUNTS REFLECT 1 UNIT)					
BAR MARK	LOCATION	TYPE	SIZE/SPACING	CUT LENGTH	# OF PCS
VERTICAL	OSF	STRAIGHT	#5 @ 12"	VARIES 14–6" TO 15'–1½"	9
VERTICAL	ISF	STRAIGHT	#6 @ 7"	VARIES 14–6" TO 15'–1½"	15
HORIZONTAL	OSF	STRAIGHT	#4 @ 12"	8'–4"	15
HORIZONTAL	ISF	STRAIGHT	#4 @ 12"	8'–4"	15
DIAGONAL	FOLLOW SLOPE	STRAIGHT	#4	8'–4¼"	2

WW4C REINFORCING SCHEDULE (COUNTS REFLECT 1 UNIT)					
BAR MARK	LOCATION	TYPE	SIZE/SPACING	CUT LENGTH	# OF PCS
VERTICAL	OSF	STRAIGHT	#5 @ 12"	VARIES 15'–1½" TO 15'–8"	9
VERTICAL	ISF	STRAIGHT	#6 @ 7"	VARIES 15'–1½" TO 15'–8"	15
HORIZONTAL	OSF	STRAIGHT	#4 @ 12"	8'–4"	15
HORIZONTAL	ISF	STRAIGHT	#4 @ 12"	8'–4"	15
DIAGONAL	FOLLOW SLOPE	STRAIGHT	#4	8'–4¼"	2

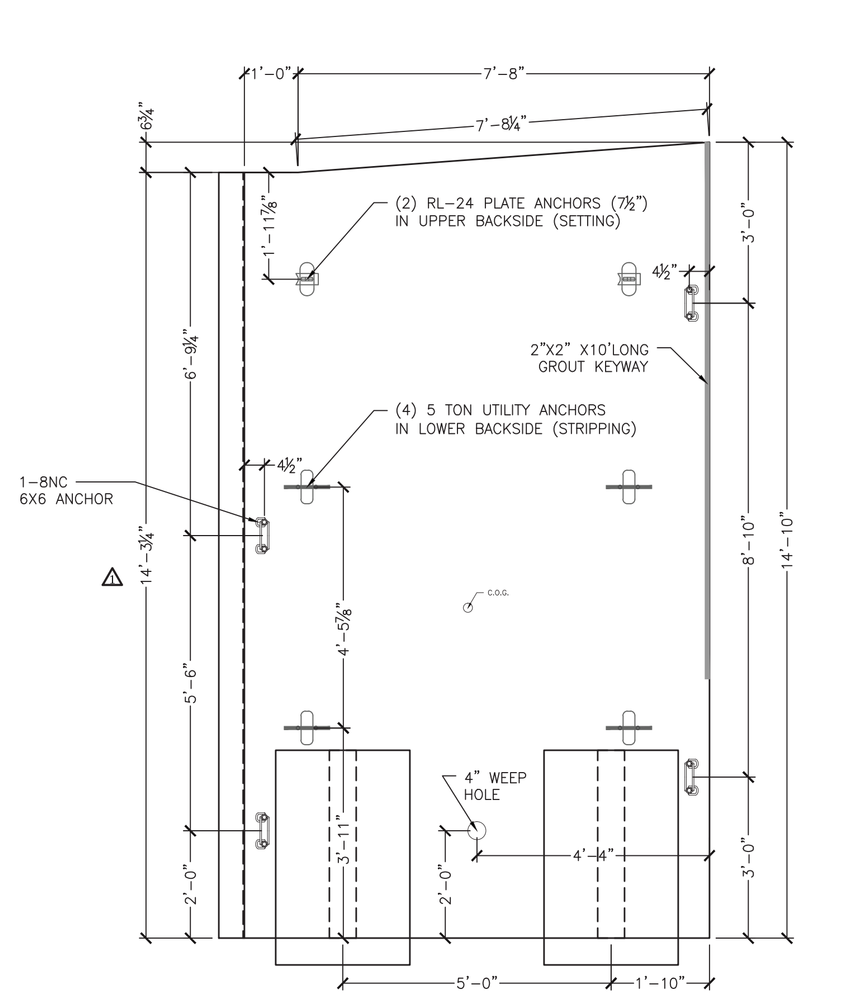

1 REQUIRED
ITEM 375602-4A
UNIT WEIGHT AND VOLUME: 25,750#
WALL: 4.91CY
E ANCHORS: 0.61CY

2 / S7.0 WW4A ELEVATION (LOOKING AT BACKSIDE)
½" = 1'–0"

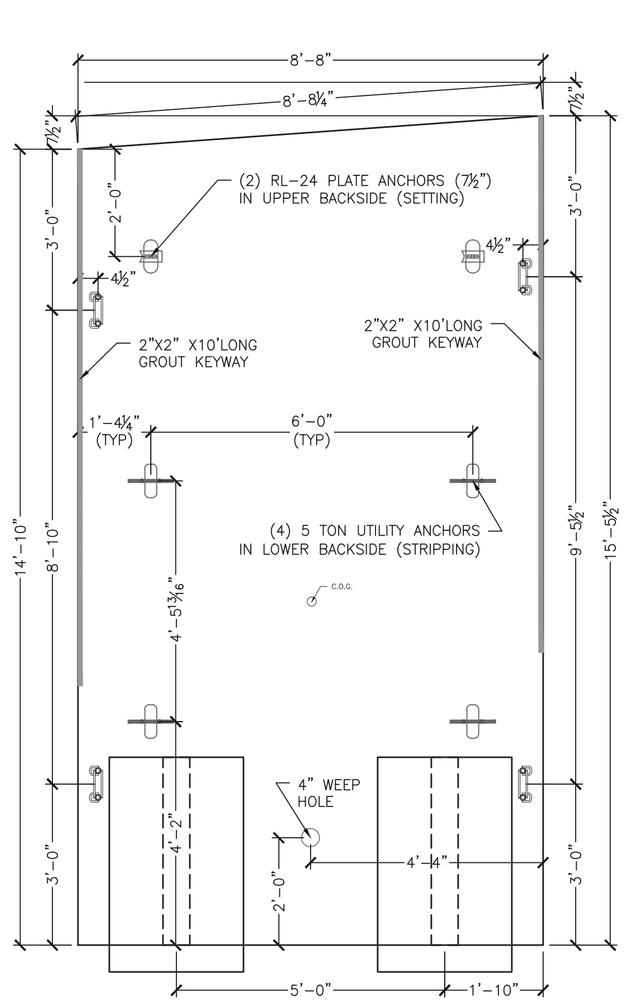

1 REQUIRED
ITEM 375602-4B
UNIT WEIGHT AND VOLUME: 25,520#
WALL: 4.86CY
E ANCHORS: 0.61CY

3 / S7.0 WW4B ELEVATION (LOOKING AT BACKSIDE)
½" = 1'–0"

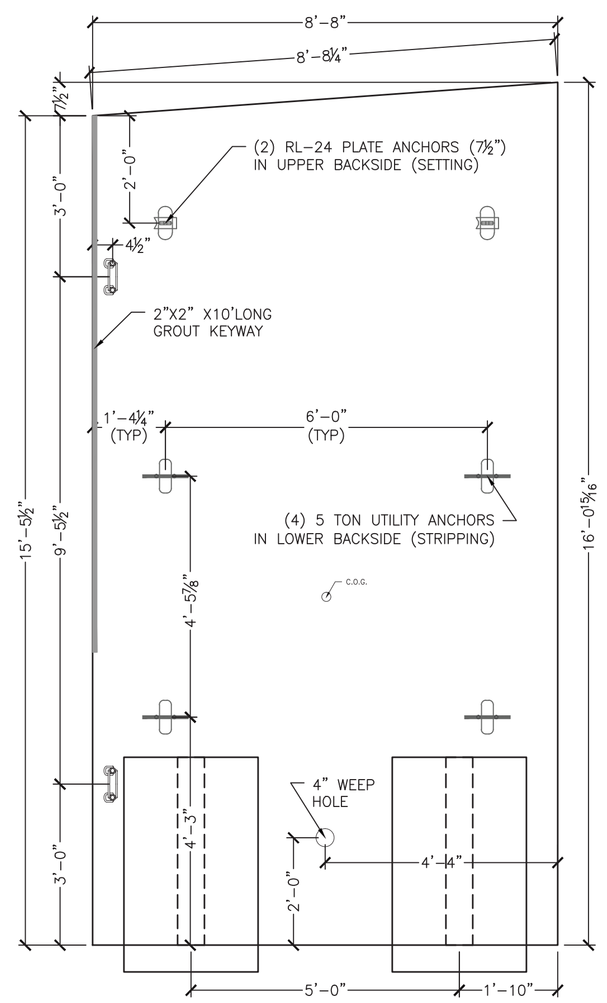

1 REQUIRED
ITEM 375602-4C
UNIT WEIGHT AND VOLUME: 26,380#
WALL: 5.06CY
E ANCHORS: 0.61CY

4 / S7.0 WW4C ELEVATION (LOOKING AT BACKSIDE)
½" = 1'–0"

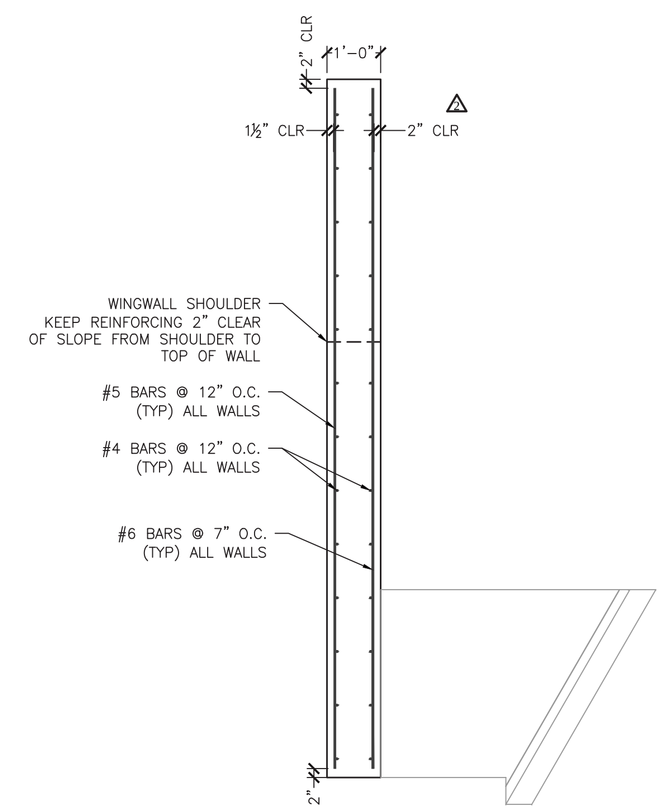

5 / S7.0 WINGWALL REINFORCING (TYP)
½" = 1'–0"

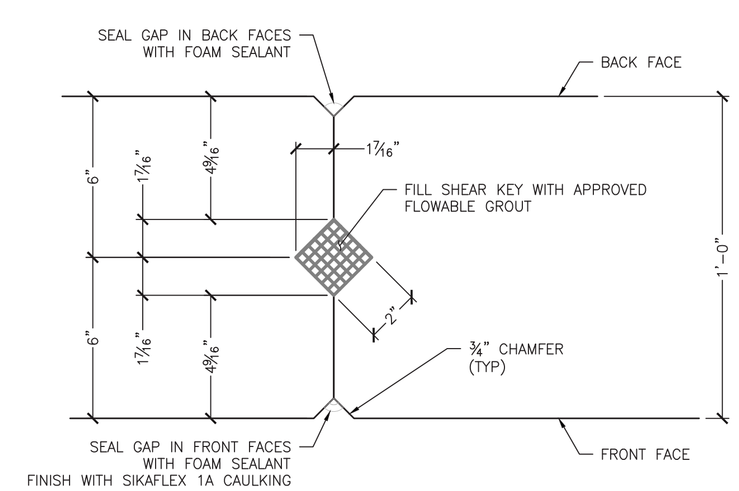

6 / S7.0 VERTICAL JOINT DETAIL
3" = 1'–0"

No.	Date	Revision	By
1		EOR Comments	PJL
2		EOR Comments	PJL

STATE OF VERMONT
THOMAS A. FRENCH
NO. 8871
LICENSED PROFESSIONAL ENGINEER
08/22/13

MICHIE CORPORATION, INC.
173 BUXTON INDUSTRIAL DRIVE-PO BOX 870
HENNIKER, NH 03242
PHONE: 603-428-3218
FAX: 603-428-7426

Fire Drive off VT Rte. 30
VAOT #ER-BRF 015-1(23)
Jamaica, VT
16'x8' Box Culvert - Wingwall 4 Details

Project No. 3745
Designed by: PJL
Drawn by: PDH
Checked by: TAF
Scale: AS SHOWN

Prepared for:
Bazin Brothers Trucking
2425 Back Westminster Road
Westminster, VT 05158

DWG NO.
S7.0

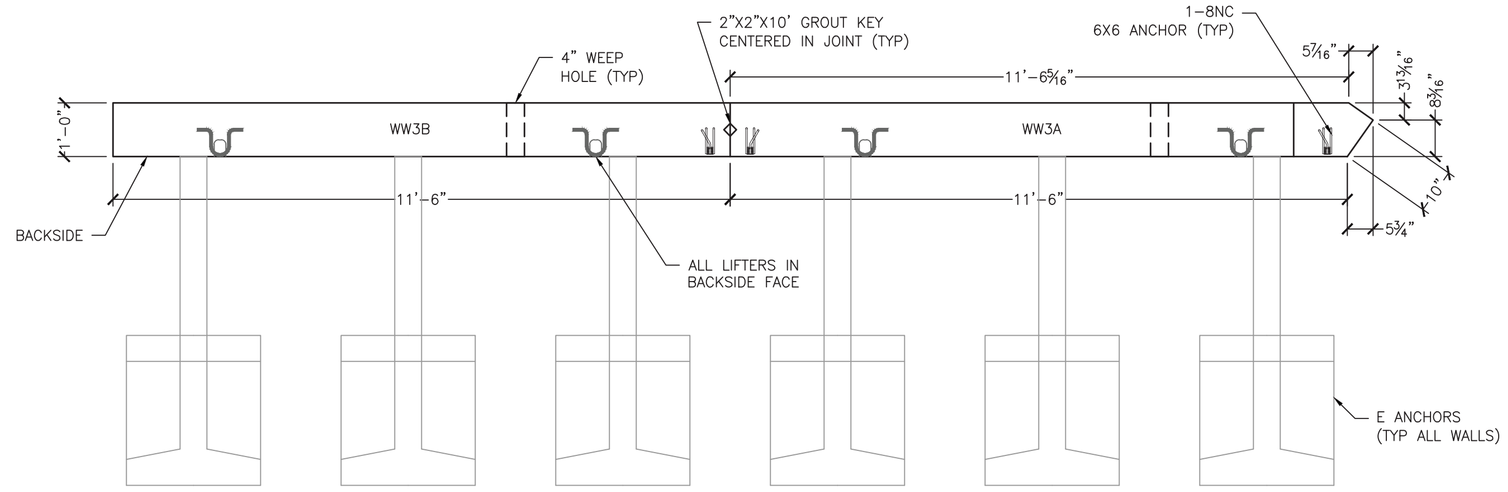

1 / S8.0 WW3A&B PLAN VIEW
½" = 1'-0"

ALL REINFORCING IN THIS DETAIL IS TO BE EPOXY COATED.
CHAIRS, SPACERS, AND TIES IN AREAS OF EPOXY COATED REINFORCING SHALL BE PLASTIC OR EPOXY COATED.

WW3A REINFORCING SCHEDULE (COUNTS REFLECT 1 UNIT)					
BAR MARK	LOCATION	TYPE	SIZE/SPACING	CUT LENGTH	# OF PCS
VERTICAL	OSF	STRAIGHT	#5 @ 12"	VARIES 13'-6¾" TO 13'-11¼"	12
VERTICAL	ISF	STRAIGHT	#6 @ 7"	VARIES 13'-6¾" TO 13'-11¼"	20
HORIZONTAL	OSF	STRAIGHT	#4 @ 12"	8'-4"	14
HORIZONTAL	ISF	STRAIGHT	#4 @ 12"	8'-4"	14
DIAGONAL	FOLLOW SLOPE	STRAIGHT	#4	8'-4¼"	2

WW3B REINFORCING SCHEDULE (COUNTS REFLECT 1 UNIT)					
BAR MARK	LOCATION	TYPE	SIZE/SPACING	CUT LENGTH	# OF PCS
VERTICAL	OSF	STRAIGHT	#5 @ 12"	VARIES 13'-1¾" TO 13'-6¾"	12
VERTICAL	ISF	STRAIGHT	#6 @ 7"	VARIES 13'-1¾" TO 13'-6¾"	20
HORIZONTAL	OSF	STRAIGHT	#4 @ 12"	8'-4"	14
HORIZONTAL	ISF	STRAIGHT	#4 @ 12"	8'-4"	14
DIAGONAL	FOLLOW SLOPE	STRAIGHT	#4	8'-4¼"	2

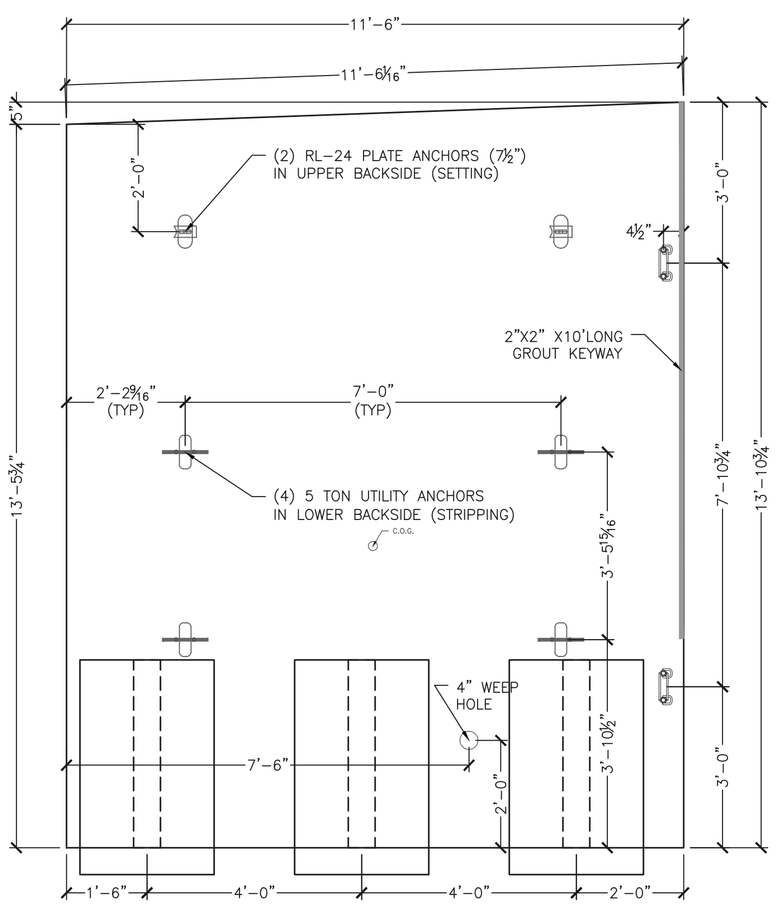

1 REQUIRED
ITEM 375602-3B
UNIT WEIGHT AND VOLUME: 32,150#
WALL: 5.83CY
E ANCHORS: 0.61CY

2 / S8.0 WW3B ELEVATION
(LOOKING AT BACKSIDE)
½" = 1'-0"

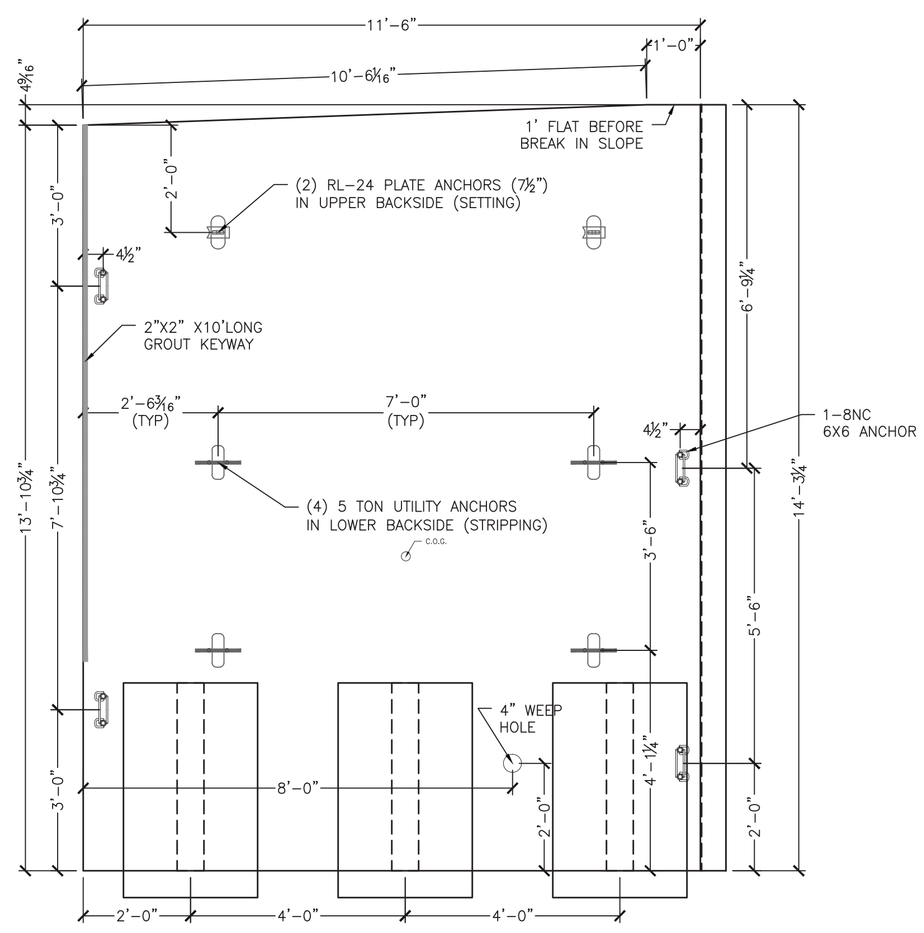

1 REQUIRED
ITEM 375602-3A
UNIT WEIGHT AND VOLUME: 34,120#
WALL: 6.30CY
E ANCHORS: 0.61CY

3 / S8.0 WW3A ELEVATION
(LOOKING AT BACKSIDE)
½" = 1'-0"

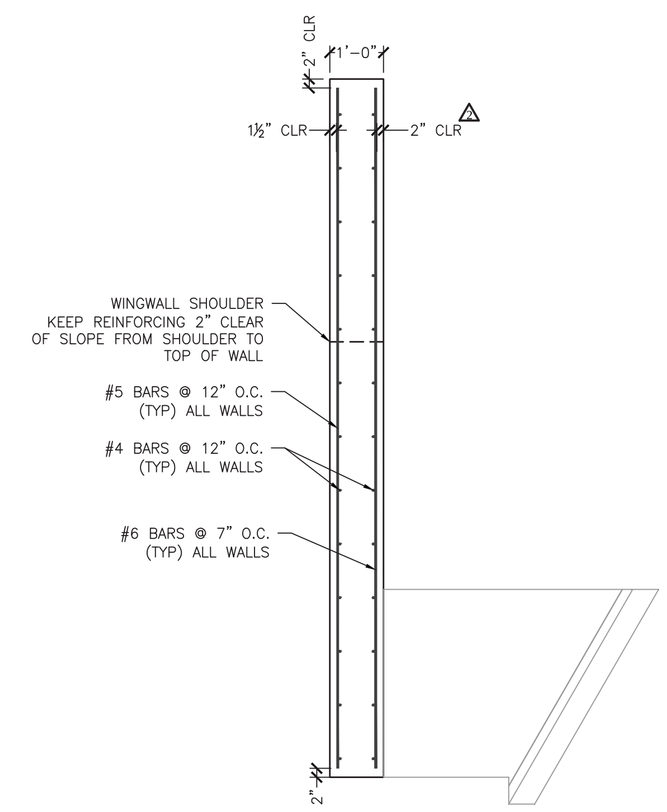

4 / S8.0 WINGWALL REINFORCING (TYP)
½" = 1'-0"

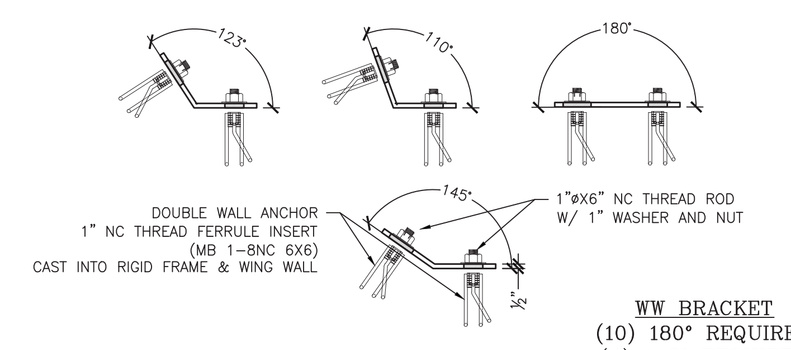

WW BRACKET
(10) 180° REQUIRED
(4) 145° REQUIRED
(2) 110° REQUIRED
(2) 123° REQUIRED

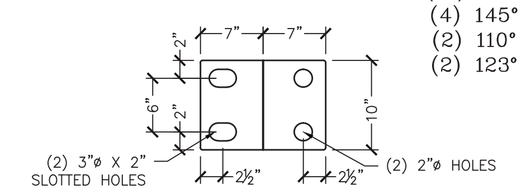

PLATES TO BE MADE OF ½" MILD STEEL,
PLASMA CUT, AND BENT AS REQUIRED.
(HOT DIPPED GALVANIZED AFTER BENDING)

5 / S8.0 WINGWALL BRACKET DETAIL
1" = 1'-0"

No.	Date	Revision	By
1		EOR Comments	PJL
2		EOR Comments	PJL

STATE OF VERMONT
THOMAS A. FRENCH
NO. 8871
LICENSED PROFESSIONAL ENGINEER
08/22/13

MICHIE CORPORATION, INC.
173 BUXTON INDUSTRIAL DRIVE-PO BOX 870
HENNIKER, NH 03242
PHONE: 603-428-3218
FAX: 603-428-7426

Fire Drive off VT Rte. 30
VAOT #ER-BRF 015-1(23)
Jamaica, VT
16'x8' Box Culvert - Wingwall 3 Details

Project No. 3745
Designed by: PJL
Drawn by: PDH
Checked by: TAF
Scale: AS SHOWN

Prepared for:
Bazin Brothers Trucking
2425 Back Westminster Road
Westminster, VT 05158

DWG NO.
S8.0

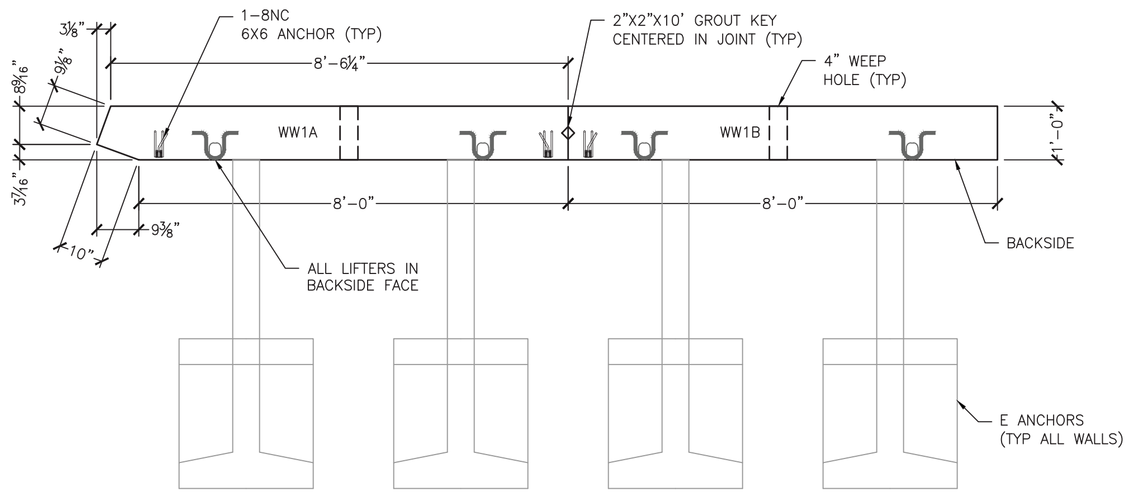

1 S9.0 WW1A&B PLAN VIEW
½" = 1'-0"

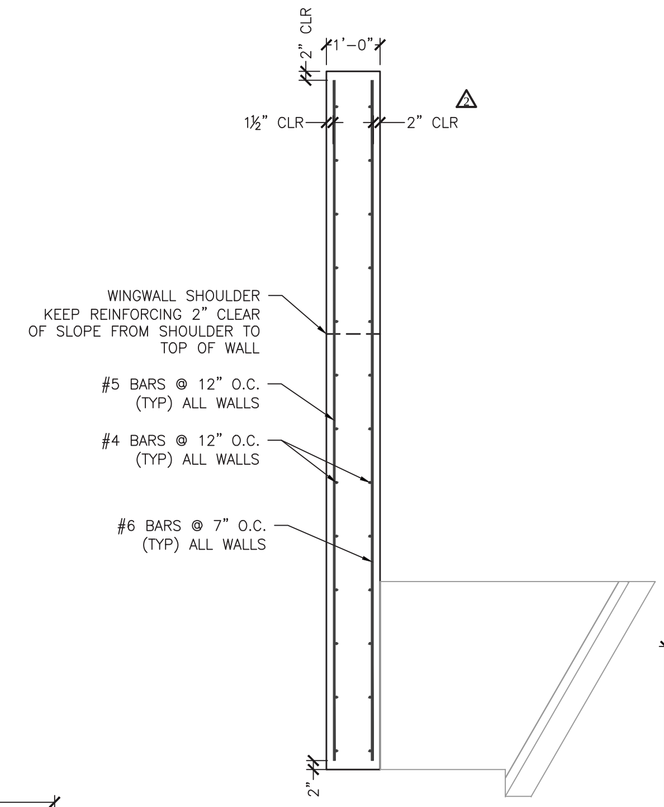

4 S9.0 WINGWALL REINFORCING (TYP)
½" = 1'-0"

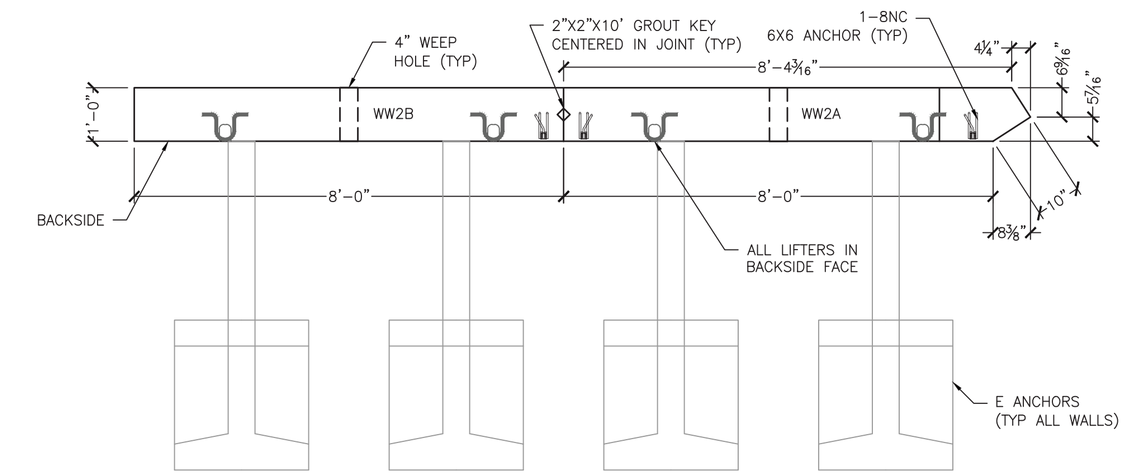

5 S9.0 WW2A&B PLAN VIEW
½" = 1'-0"

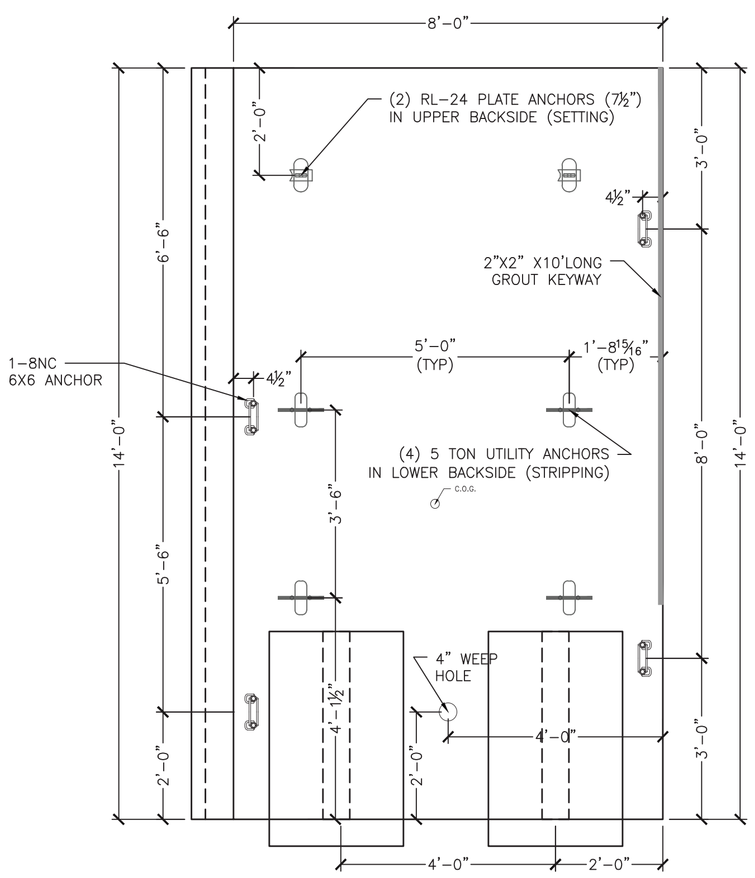

1 REQUIRED
ITEM 375602-1A
UNIT WEIGHT AND VOLUME: 24,070#
WALL: 4.51CY
E ANCHORS: 0.61CY

WW1A ELEVATION
2 S9.0 (LOOKING AT BACKSIDE)
½" = 1'-0"

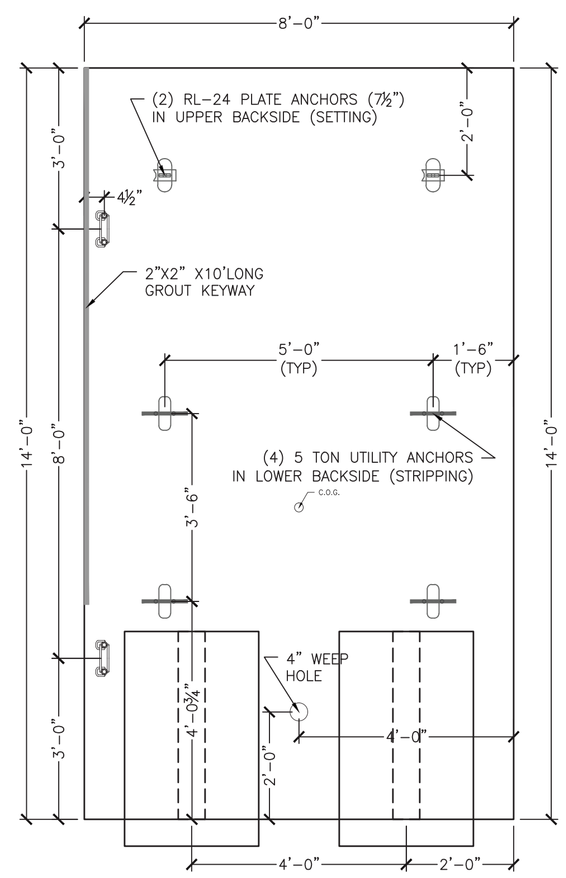

1 REQUIRED
ITEM 375602-1B
UNIT WEIGHT AND VOLUME: 22,725#
WALL: 4.19CY
E ANCHORS: 0.61CY

WW1B ELEVATION
3 S9.0 (LOOKING AT BACKSIDE)
½" = 1'-0"

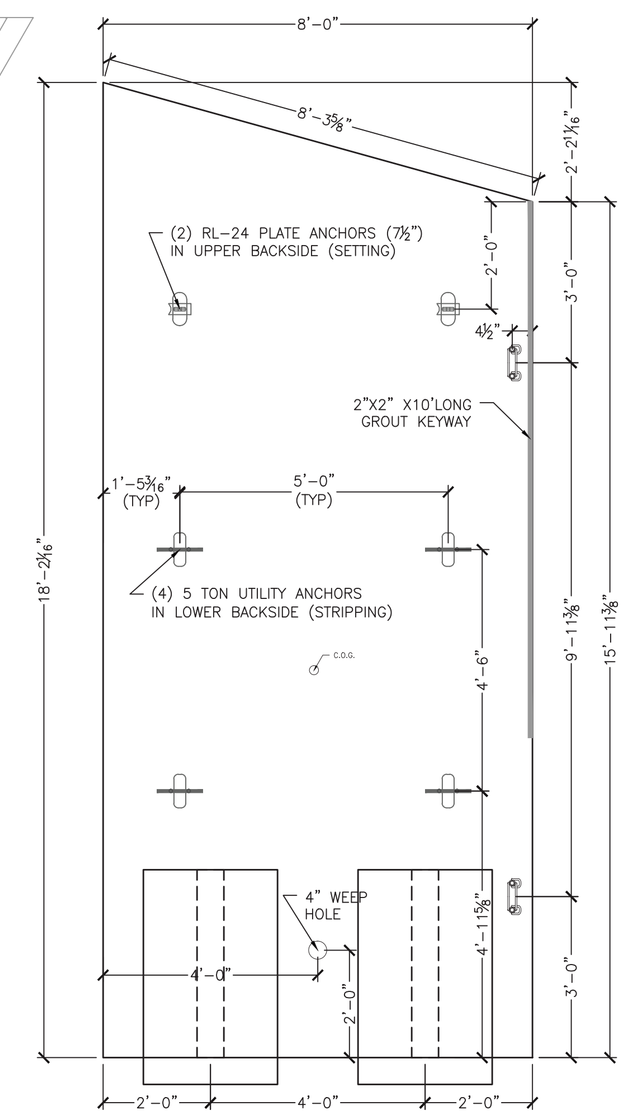

1 REQUIRED
ITEM 375602-2B
UNIT WEIGHT AND VOLUME: 26,335#
WALL: 5.05CY
E ANCHORS: 0.61CY

WW2B ELEVATION
6 S9.0 (LOOKING AT BACKSIDE)
½" = 1'-0"

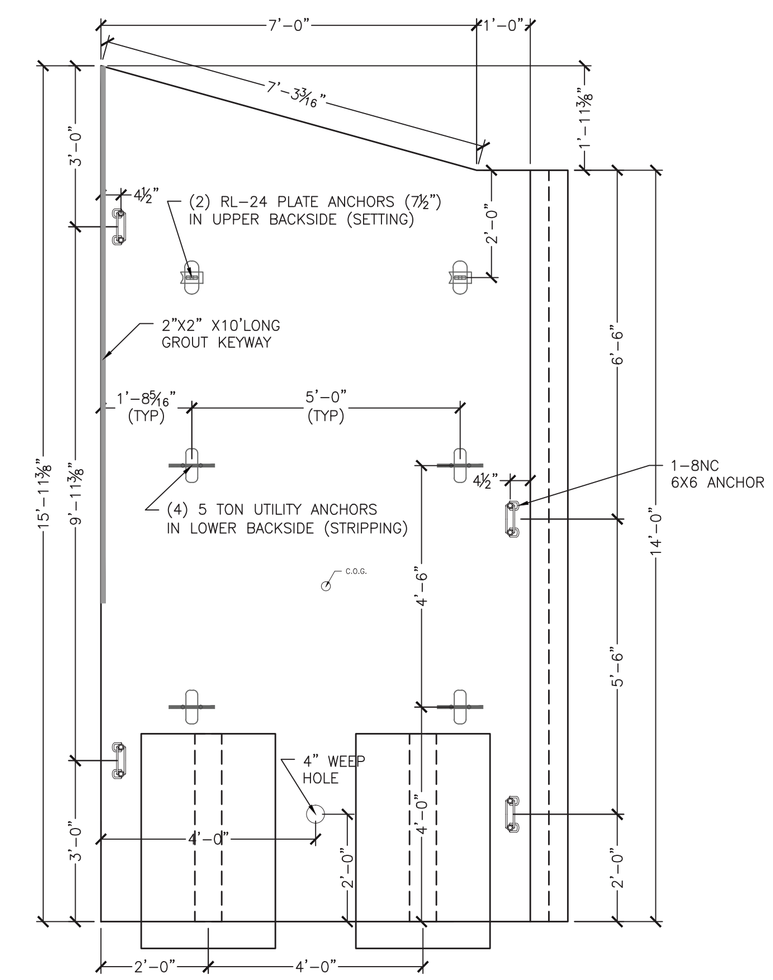

1 REQUIRED
ITEM 375602-2A
UNIT WEIGHT AND VOLUME: 25,120#
WALL: 4.76CY
E ANCHORS: 0.61CY

WW2A ELEVATION
7 S9.0 (LOOKING AT BACKSIDE)
½" = 1'-0"

ALL REINFORCING IN THIS DETAIL IS TO BE EPOXY COATED.
CHAIRS, SPACERS, AND TIES IN AREAS OF EPOXY COATED REINFORCING SHALL BE PLASTIC OR EPOXY COATED.

WW1A REINFORCING SCHEDULE (COUNTS REFLECT 1 UNIT)

BAR MARK	LOCATION	TYPE	SIZE/SPACING	CUT LENGTH	# OF PCS
VERTICAL	OSF	STRAIGHT	#5 @ 12"	13'-8"	8
VERTICAL	ISF	STRAIGHT	#6 @ 7"	13'-8"	14
HORIZONTAL	OSF	STRAIGHT	#4 @ 12"	8'-2¼"	14
HORIZONTAL	ISF	STRAIGHT	#4 @ 12"	8'-2¼"	14

WW1B REINFORCING SCHEDULE (COUNTS REFLECT 1 UNIT)

BAR MARK	LOCATION	TYPE	SIZE/SPACING	CUT LENGTH	# OF PCS
VERTICAL	OSF	STRAIGHT	#5 @ 12"	13'-8"	8
VERTICAL	ISF	STRAIGHT	#6 @ 7"	13'-8"	14
HORIZONTAL	OSF	STRAIGHT	#4 @ 12"	7'-8"	14
HORIZONTAL	ISF	STRAIGHT	#4 @ 12"	7'-8"	14

ALL REINFORCING IN THIS DETAIL IS TO BE EPOXY COATED.
CHAIRS, SPACERS, AND TIES IN AREAS OF EPOXY COATED REINFORCING SHALL BE PLASTIC OR EPOXY COATED.

WW2A REINFORCING SCHEDULE (COUNTS REFLECT 1 UNIT)

BAR MARK	LOCATION	TYPE	SIZE/SPACING	CUT LENGTH	# OF PCS
VERTICAL	OSF	STRAIGHT	#5 @ 12"	VARIES 13'-8" TO 15'-7"	8
VERTICAL	ISF	STRAIGHT	#6 @ 7"	VARIES 13'-8" TO 15'-7"	14
HORIZONTAL	OSF	STRAIGHT	#4 @ 12"	8'-0"	15
HORIZONTAL	ISF	STRAIGHT	#4 @ 12"	8'-0"	15
DIAGONAL	FOLLOW SLOPE	STRAIGHT	#4	7'-0"	2

WW2B REINFORCING SCHEDULE (COUNTS REFLECT 1 UNIT)

BAR MARK	LOCATION	TYPE	SIZE/SPACING	CUT LENGTH	# OF PCS
VERTICAL	OSF	STRAIGHT	#5 @ 12"	VARIES 15'-7' TO 17'-10"	8
VERTICAL	ISF	STRAIGHT	#6 @ 7"	VARIES 15'-7' TO 17'-10"	14
HORIZONTAL	OSF	STRAIGHT	#4 @ 12"	7'-8"	16
HORIZONTAL	ISF	STRAIGHT	#4 @ 12"	7'-8"	16
DIAGONAL	FOLLOW SLOPE	STRAIGHT	#4	7'-11¼"	2

No.	Date	Revision	By
1	EOR Comments		PJL
2	EOR Comments		PJL

STATE OF VERMONT
THOMAS A. FRENCH
NO. 8871
STRUCTURAL
LICENSED
PROFESSIONAL ENGINEER
08.22.13

MICHIE CORPORATION, INC.
173 BUXTON INDUSTRIAL DRIVE-PO BOX 870
HENNIKER, NH 03242
PHONE: 603-428-3218
FAX: 603-428-7426

Fire Drive off VT Rte. 30
VAOT #ER-BRF 015-1(23)
Jamaica, VT
16'x8' Box Culvert - Wingwall 1 & WW2 Details

Project No. 3745
Designed by: PJL
Drawn by: PDH
Checked by: TAF
Scale: AS SHOWN

Prepared for:
Bazin Brothers Trucking
2425 Back Westminster Road
Westminster, VT 05158

DWG NO.
S9.0

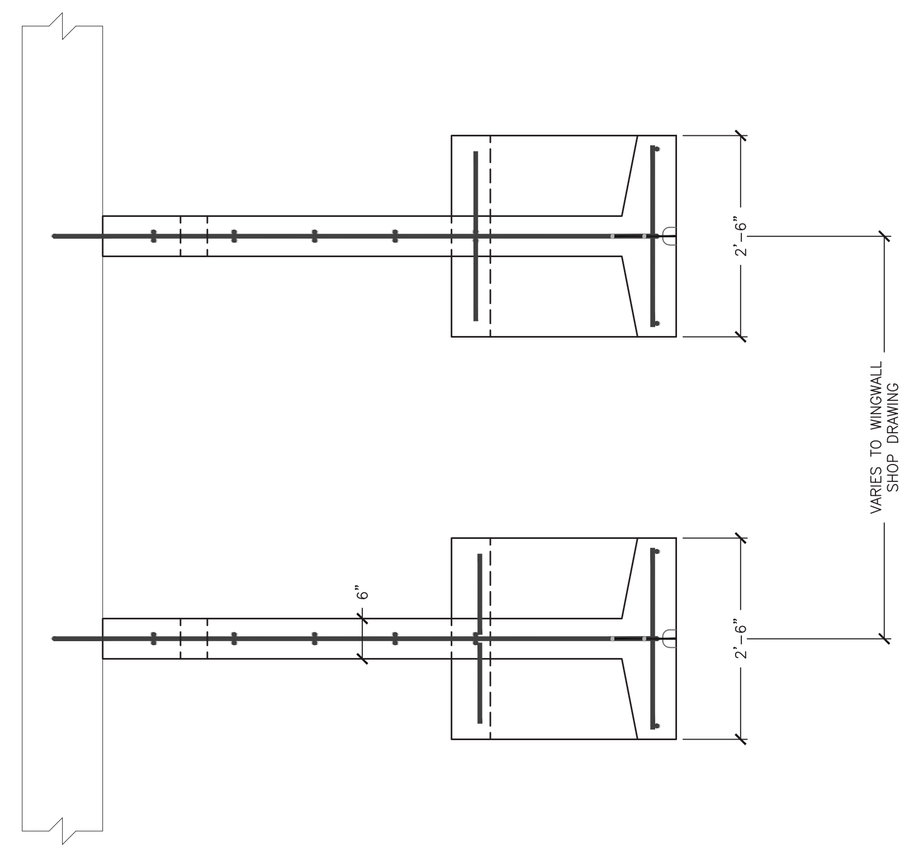

NOTE: REINFORCING SHOWN REPRESENTS "E" ANCHOR
OTHER ANCHOR REINFORCING SIMILAR
ALL REINFORCING IN THIS DETAIL TO BE EPOXY COATED

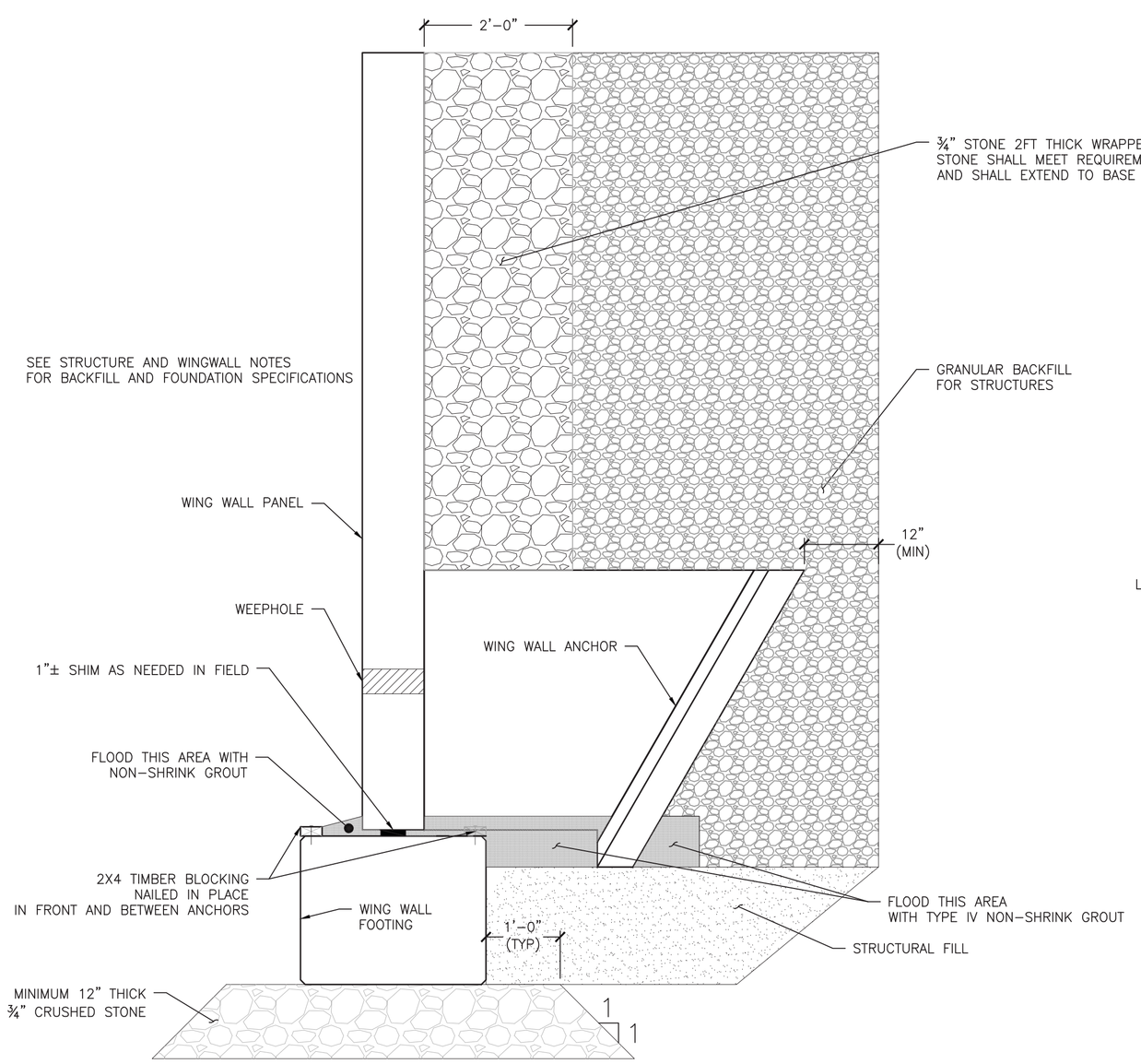

△1 FOOTING TO WW ATTACHMENT DETAIL
1 S10.0 ¾" = 1'-0"

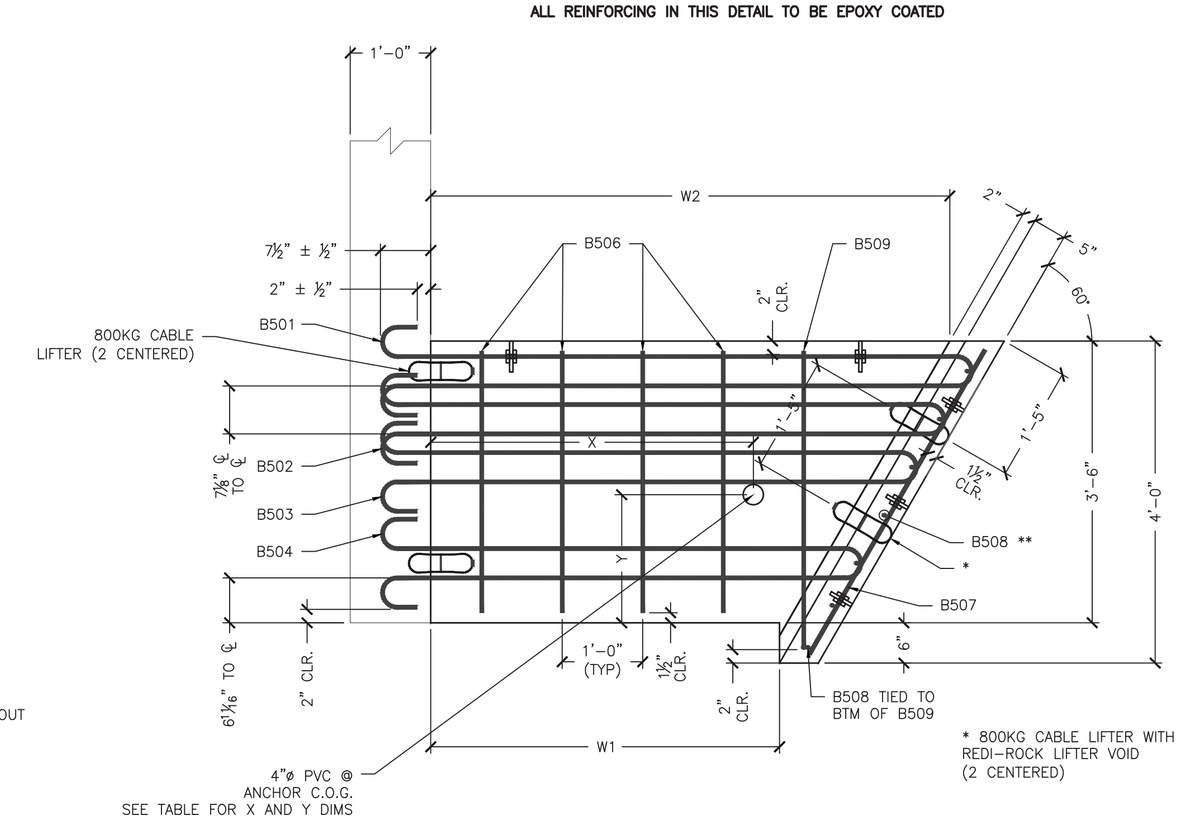

2 S10.0 ANCHOR DETAIL
¾" = 1'-0"

* 800KG CABLE LIFTER WITH
REDI-ROCK LIFTER VOID
(2 CENTERED)

** PLACE (1) B508 THROUGH EACH HOOP BARS,
(1) CENTERED BETWEEN HOOP BARS 503 & 504, AND
(2) BELOW B504 HOOP BAR W/ BOTTOM B508
2" CLEAR FROM BOTTOM (7 TOTAL)

△1 **ALL REINFORCING IN THIS DETAIL IS TO BE EPOXY COATED.
CHAIRS, SPACERS, AND TIES IN AREAS OF EPOXY COATED REINFORCING
SHALL BE PLASTIC OR EPOXY COATED.**

ANCHOR TYPE "B"					
CONCRETE QUANTITY				0.41 CY	
WEIGHT				1740 LB	
W1				1'-4"	
W2				3'-5⅜"	
X =	2'-2⅛"	Y=	1'-8⅜"		
BAR LIST					
MARK	QTY	SIZE	L	TYPE	LENGTH
B501	1	#5	4'-4½"	1	10'-1½"
B502	1	#5	4'-0½"	1	9'-5"
B503	1	#5	3'-8¼"	1	8'-9"
B504	1	#5	3'-0"	1	7'-4½"
B505	2	#5	3'-8½"	2	4'-7"
B506	2	#5	----	Str.	3'-3"
B507	4	#5	----	Str.	4'-4½"
B508	7	#5	----	Str.	2'-3"
B509	2	#5	----	Str.	3'-8"

ANCHOR TYPE "C"					
CONCRETE QUANTITY				0.48 CY	
WEIGHT				2010 LB	
W1				2'-4"	
W2				4'-5⅜"	
X =	2'-8¾"	Y=	1'-8½"		
BAR LIST					
MARK	QTY	SIZE	L	TYPE	LENGTH
B501	1	#5	5'-4½"	1	12'-1½"
B502	1	#5	5'-0½"	1	11'-5"
B503	1	#5	4'-8¼"	1	10'-9"
B504	1	#5	4'-0"	1	9'-4½"
B505	2	#5	3'-8½"	2	4'-7"
B506	2	#5	----	Str.	3'-3"
B507	4	#5	----	Str.	4'-4½"
B508	7	#5	----	Str.	2'-3"
B509	2	#5	----	Str.	3'-8"

ANCHOR TYPE "D"					
CONCRETE QUANTITY				0.54 CY	
WEIGHT				2285 LB	
W1				3'-4"	
W2				5'-5⅜"	
X =	3'-5⅛"	Y=	1'-8½"		
BAR LIST					
MARK	QTY	SIZE	L	TYPE	LENGTH
B501	1	#5	6'-4½"	1	14'-1½"
B502	1	#5	6'-0½"	1	13'-5"
B503	1	#5	5'-8¼"	1	12'-9"
B504	1	#5	5'-0"	1	11'-4½"
B505	2	#5	3'-8½"	2	4'-7"
B506	2	#5	----	Str.	3'-3"
B507	4	#5	----	Str.	4'-4½"
B508	7	#5	----	Str.	2'-3"
B509	2	#5	----	Str.	3'-8"

ANCHOR TYPE "E"					
CONCRETE QUANTITY				0.61 CY	
WEIGHT				2550 LB	
W1				4'-4"	
W2				6'-5⅜"	
X =	4'-0"	Y=	1'-8⅝"		
BAR LIST					
MARK	QTY	SIZE	L	TYPE	LENGTH
B501	1	#5	7'-4½"	1	16'-1½"
B502	1	#5	7'-0½"	1	15'-5"
B503	1	#5	6'-8¼"	1	14'-9"
B504	1	#5	6'-0"	1	13'-4½"
B505	2	#5	3'-8½"	2	4'-7"
B506	8	#5	----	Str.	3'-3"
B507	4	#5	----	Str.	4'-4½"
B508	7	#5	----	Str.	2'-3"
B509	2	#5	----	Str.	3'-8"

20 REQ'D

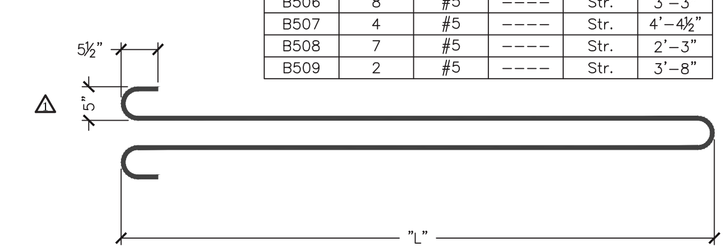

TYPE 1

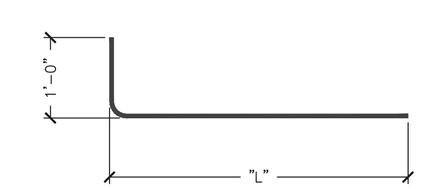

TYPE 2

No.	Date	Revision	By
△1		EOR Comments	PJL
△1		EOR Comments	PJL

STATE OF VERMONT
THOMAS A. FRENCH
NO. 8871
LICENSED
PROFESSIONAL ENGINEER
08/22/13

MICHIE CORPORATION, INC.
173 BUXTON INDUSTRIAL DRIVE-PO BOX 870
HENNIKER, NH 03242
PHONE: 603-428-3218
FAX: 603-428-7426

Fire Drive off VT Rte. 30
VAOT #ER-BRF 015-1(23)
Jamaica, VT
16'x8' Box Culvert - Wingwall Anchor Details

Scale: AS SHOWN
Checked by: TAF
Drawn by: PDH
Designed by: PJL
Project No. 3745

Prepared for:
Bazin Brothers Trucking
2425 Back Westminster Road
Westminster, VT 05158

DWG NO.
S10.0

173 Buxton Industrial Drive
PO Box 870
Henniker NH 03242
(603) 428-3218
1-800-322-6949
www.michiecorp.com

DESIGN COMPUTATIONS
16’ x 8’ Box Culvert
Detached Curbwalls
Anchor-Style Wingwalls

Prepared For:
Bazin Brothers Trucking
2425 Back Westminster Road
Westminster, VT 05158

Project Information:
VAOT #ER-BRF 015-1(23)
Fire Drive
Jamaica, VT

Michie Project No: 3745

STATE OF VERMONT
THOMAS A. FRENCH
NO. 8871
Structural
LICENSED
PROFESSIONAL ENGINEER
08/22/13

Project: Fire Drive, Jamaica VT
Task : 16 x 8 BC
Job No.: 3745
Client : Bazin Bros
Agency : None

CULVERT PROPERTIES
==========

NOTE:
DESIGN HAS BEEN VERIFIED TO BE IN CONFORMANCE WITH LRFD 6TH EDITION 2012

Type of Culvert: Precast
Specification : LRFD 5th Edition 2010
Operating Mode : ANALYSIS

Physical Dimensions

No. of Boxes: 1 Name: BoxCulvert
Clear Span : 16.0000 ft
Clear Height: 8.0000 ft Skew Angle : 0.00 deg
Length : 5.0000 ft
Bottom Slab Support: Full Slab
Fill Depth Range: Maximum : 7.50 ft Minimum: 3.00 ft Increment: 1.00 ft
Haunches: Top: 9.0000 in Bottom: 9.0000 in
Member Thicknesses: Top Slab: 12.0000 in
Bot Slab: 12.0000 in
Ext Wall: 10.0000 in

Material Properties

Concrete: Strength,f'c: 5.000 ksi Density: 0.150 kcf Elasticity,Ec: 4287 ksi
Type: Normal Weight
Steel: Yield,fy: 60.00 ksi Allow Stress: 24.00 ksi Elasticity,Es: 29000 ksi
Yield,fyv: 60.00 ksi Diameter : 1.000 in
Soil: Density: 0.140 kcf Slope Factor: 1.150 (Granular)
Fe Factor: 1.150 (Maximum for Compacted Fill)
Serviceability, Gamma-e: 0.75

Loads

Live Load: Vehicle: HL-93

Axle No.	Weight(k)	Dist. From Previous(ft)
1	8.00	0.00
2	32.00	14.00
3	32.00	14.00

Gage Width: 6.00 ft, Tread Width: 20.00 in, Tread Length: 10.00 in
Include Tandem: yes
Tandem: Axle 1: 25.00 k, Axle 2: 25.00 k, Axle Spacing: 4.00 ft
Lane Load: 0.64 klf, P-Moment: 0.00 k, P-Shear: 0.00 k
Combine: Truck + Lane Or Tandem + Lane
Include Lane Load: no
Max. No. of Lanes: Computed by Program
Override MPF: no
Traffic Direction: Lanes Parallel to Main Reinforcement
Neglect Live Load for Large Fill Depths: yes
Apply Surcharge at Fill Depths > 2 foot: yes
Surcharge Depth : 3.00 ft
Dead Load: Future Wearing Surf.: 0.04 k/ft
Additional Dead Load: 0.00 k/ft
Concentrated Loads : none
Lateral Soil Loads: Max. Equiv. Fluid Press.: 70.00 pcf
Min. Equiv. Fluid Press.: 35.00 pcf
Fluid Pressures : Consider Int. Water Press.: no

Load and Resistance Factors

	Max	Min
DC:	1.25	0.90
DW:	1.50	0.65
EV:	1.30	0.90
EH:	1.35	0.90
WA:	1.00	

LL I: 1.75 LL II: 1.35
Ductility: 1.00 Importance: 1.00 Redundancy: 1.00 Condition: 1.00 System: 1.00
Phi Shear: 0.90 Phi Moment: 1.00

Reinforcement

Rebar Covers:	Exterior	Interior
Top Slab:	2.0000 in	1.5000 in
Walls :	2.0000 in	1.5000 in

Bot Slab: 2.0000 in 1.5000 in

Assigned reinforcement:

Location	Mark	Size	Spacing (in)
Top Slab Inside	A100 (AS2)	7	6.0000
Bottom Slab Inside	A200 (AS3)	7	6.0000
Top Slab Outside	A300 (AS7)	4	12.0000
Bottom Slab Outside	A400 (AS8)	4	12.0000
Top Corner	A1 (AS1)	6	6.0000
Bottom Corner	A2 (AS1)	6	6.0000
Ext. Wall Inside	B1 (AS4)	5	8.0000
Ext. Wall Outside	B2 (AS1)	6	6.0000
Longitudinal	C1 (AS6)	4	12.0000
Top Distribution	C100 (AS5)	4	12.0000
Bottom Distribution	C200	4	12.0000

Analysis Options

```
LL Analysis  : Automatically Set Traffic Direction to Account for Skew Effects: no
               Limit Distribution Width to Culvert Length for Fills < 2 foot: no
               Limit Distribution Width to Culvert Length for Fills > 2 foot: no
               Combine Axle Overlaps for Fills > 2 foot: yes
               Override DLA: no
               Include Impact on Bottom Slab: yes
               Always Distribute Wheel Load: no
Reinforcement: Always Include Distribution Steel: no
               User Defined Longitudinal Steel: no
               Max. As used in Vc Calcs: 2.00 in2/ft
Slenderness  : Checked       K Factor: 2.00
Modeling     : Use Haunches in the Structural Model: yes
Crit. Section: Consider Haunches when Selecting Critical Section Locations: yes
               Extend Critical Section for Shear Beyond the End of the Haunch: yes
               Use Max. Moment with Max. Shear at the Critical Section for Shear: yes
Misc. Options: Use Strength II: no
               Ignore Axial Thrust: no
Live Load Deflection Criteria: 1/800
```

ANALYSIS RESULTS
==========

Top Slab Thickness = 12.00 in
Bottom Slab Thickness = 12.00 in
Exterior Wall Thickness = 10.00 in

Modular Ratio (N) = 6.76
Max. Steel Ratio = 0.025
Design Span = 16.83 ft
Design Height = 9.00 ft

Volume of Concrete: 1.844 cy/ft Weight of Steel : 394 lb/ft

Reinforcing Steel Schedule

Location	Bar Mark	Qty	Size	Type	Spacing (in)	As,prv (in2/ft)	Length (ft-in)	Wgt (lbs)	H Leg (ft-in)	V Leg (ft-in)
Top Slab (int)	A100 (AS2)	10	7	STR	6.00	1.200	17- 3	352		
Bot Slab (int)	A200 (AS3)	10	7	STR	6.00	1.200	17- 3	352		
Top Slab (ext)	A300 (AS7)	5	4	STR	12.00	0.200	17- 3	59		
Bot Slab (ext)	A400 (AS8)	5	4	STR	12.00	0.200	17- 3	59		
Corner (Top)	A1 (AS1)	20	6	L-BAR	6.00	0.880	7- 4	220	4- 6	2-10
Corner (Bottom)	A2 (AS1)	20	6	L-BAR	6.00	0.880	7- 4	220	4- 6	2-10
Ext Wall (int)	B1 (AS4)	16	5	STR	8.00	0.465	8- 6	143		
Ext Wall (ext)	B2 (AS1)	20	6	STR	6.00	0.880	8- 0	240		
Top Slab (int- 1)	C100 (AS5)	17	4	STR	12.00	0.200	4-11	57		
Bot Slab (int- 1)	C200	17	4	STR	12.00	0.200	4-11	57		
Temperature (1)	C1 (AS6)	17	4	STR	12.00	0.200	4-11	57		
Temperature (1)	C1 (AS6)	17	4	STR	12.00	0.200	4-11	57		
Temperature (1)	C1 (AS6)	18	4	STR	12.00	0.200	4-11	60		
Temperature (1)	C1 (AS6)	18	4	STR	12.00	0.200	4-11	60		
							Total	1993		

Note: A denotes flexural steel, B denotes vertical steel, C denotes longitudinal steel

Splice Lengths Table

Bar Mark	Size	Splice Length (ft-in)
B1	5	1- 9
C1	4	1- 9
C100	4	1- 9
C200	4	1- 9

ANALYSIS RESULTS (Fill Depth = 3.00 ft)
==========

Load Parameters:

Fe = 1.03

Unfactored Moments due to All Loads: (k-ft) (Fill Depth = 3.00 ft)

M-PT	Mdc	Mev	Mdw	Meh	Mls	Mwa	Mll+	Mll-
Member 1: (Exterior Wall)								
Bottom								
1- 0	-4.52	-6.16	-0.50	-2.12	-0.74	0.00	0.00	-6.81
1- 1	-4.23	-6.16	-0.50	0.33	0.03	0.00	0.00	-6.40
1- 2	-3.94	-6.16	-0.50	2.09	0.62	0.00	0.00	-6.13
1- 3	-3.65	-6.16	-0.50	3.22	1.05	0.00	0.00	-6.29
1- 4	-3.37	-6.16	-0.50	3.78	1.30	0.00	0.00	-6.52
1- 5	-3.08	-6.16	-0.50	3.82	1.39	0.00	0.00	-6.80
1- 6	-2.79	-6.16	-0.50	3.38	1.30	0.00	0.00	-7.09
1- 7	-2.50	-6.16	-0.50	2.54	1.05	0.00	0.00	-7.41
1- 8	-2.21	-6.16	-0.50	1.33	0.62	0.00	0.00	-7.72
1- 9	-1.92	-6.16	-0.50	-0.18	0.03	0.00	0.00	-8.04
1-10	-1.63	-6.16	-0.50	-1.94	-0.74	0.00	0.08	-8.35
Top								
Member 2: (Top Slab)								
Left								
2- 0	-1.63	-6.16	-0.50	-1.94	-0.74	0.00	0.08	-8.35
2- 1	0.28	-0.62	-0.05	-1.94	-0.74	0.00	2.62	-3.15
2- 2	1.77	3.68	0.30	-1.94	-0.74	0.00	6.42	-0.13
2- 3	2.83	6.76	0.54	-1.94	-0.74	0.00	9.87	0.00
2- 4	3.47	8.61	0.69	-1.94	-0.74	0.00	11.97	0.00
2- 5	3.68	9.22	0.74	-1.94	-0.74	0.00	12.70	0.00
2- 6	3.47	8.61	0.69	-1.94	-0.74	0.00	11.97	0.00
2- 7	2.83	6.76	0.54	-1.94	-0.74	0.00	9.87	0.00
2- 8	1.77	3.68	0.30	-1.94	-0.74	0.00	6.42	-0.13
2- 9	0.28	-0.62	-0.05	-1.94	-0.74	0.00	2.62	-3.15
2-10	-1.63	-6.16	-0.50	-1.94	-0.74	0.00	0.08	-8.35
Right								
Member 4: (Bottom Slab)								
Left								
4- 0	-4.52	-6.16	-0.50	-2.12	-0.74	0.00	0.00	-6.81
4- 1	-0.91	-0.62	-0.05	-2.12	-0.74	0.00	0.25	-1.44
4- 2	1.91	3.68	0.30	-2.12	-0.74	0.00	4.00	0.00
4- 3	3.92	6.76	0.54	-2.12	-0.74	0.00	6.73	0.00
4- 4	5.12	8.61	0.69	-2.12	-0.74	0.00	8.37	0.00
4- 5	5.52	9.22	0.74	-2.12	-0.74	0.00	8.91	0.00
4- 6	5.12	8.61	0.69	-2.12	-0.74	0.00	8.37	0.00
4- 7	3.92	6.76	0.54	-2.12	-0.74	0.00	6.73	0.00
4- 8	1.91	3.68	0.30	-2.12	-0.74	0.00	4.00	0.00
4- 9	-0.91	-0.62	-0.05	-2.12	-0.74	0.00	0.25	-1.44
4-10	-4.52	-6.16	-0.50	-2.12	-0.74	0.00	0.00	-6.81
Right								

Unfactored Shears due to All Loads: (k-ft) (Fill Depth = 3.00 ft)

M-PT	Vdc	Vev	Vdw	Veh	Vls	Vwa	Vll+	Vll-
Member 1: (Exterior Wall)								
Bottom								
1- 0	0.32	0.00	0.00	3.12	0.94	0.00	0.46	-0.36
1- 1	0.32	0.00	0.00	2.33	0.76	0.00	0.46	-0.36
1- 2	0.32	0.00	0.00	1.60	0.57	0.00	0.46	-0.36
1- 3	0.32	0.00	0.00	0.93	0.38	0.00	0.46	-0.36
1- 4	0.32	0.00	0.00	0.32	0.19	0.00	0.46	-0.36
1- 5	0.32	0.00	0.00	-0.23	0.00	0.00	0.46	-0.36
1- 6	0.32	0.00	0.00	-0.72	-0.19	0.00	0.46	-0.36
1- 7	0.32	0.00	0.00	-1.15	-0.38	0.00	0.46	-0.36
1- 8	0.32	0.00	0.00	-1.52	-0.57	0.00	0.46	-0.36
1- 9	0.32	0.00	0.00	-1.83	-0.76	0.00	0.46	-0.36
1-10	0.32	0.00	0.00	-2.08	-0.95	0.00	0.46	-0.36
Top								
Member 2: (Top Slab)								
Left								
2- 0	1.26	3.66	0.29	0.00	0.00	0.00	5.05	0.00

2- 1	1.01	2.92	0.24	0.00	0.00	0.00	4.38	-0.07
2- 2	0.76	2.19	0.18	0.00	0.00	0.00	3.69	-0.30
2- 3	0.51	1.46	0.12	0.00	0.00	0.00	2.98	-0.68
2- 4	0.25	0.73	0.06	0.00	0.00	0.00	2.29	-1.10
2- 5	0.00	0.00	0.00	0.00	0.00	0.00	1.61	-1.61
2- 6	-0.25	-0.73	-0.06	0.00	0.00	0.00	1.10	-2.29
2- 7	-0.51	-1.46	-0.12	0.00	0.00	0.00	0.68	-2.98
2- 8	-0.76	-2.19	-0.18	0.00	0.00	0.00	0.30	-3.69
2- 9	-1.01	-2.92	-0.24	0.00	0.00	0.00	0.07	-4.38
2-10	-1.26	-3.66	-0.29	0.00	0.00	0.00	0.00	-5.05
Right								

Member 4: (Bottom Slab)

Left								
4- 0	2.39	3.66	0.29	0.00	0.00	0.00	3.54	0.00
4- 1	1.91	2.92	0.24	0.00	0.00	0.00	2.84	0.00
4- 2	1.43	2.19	0.18	0.00	0.00	0.00	2.13	0.00
4- 3	0.96	1.46	0.12	0.00	0.00	0.00	1.43	0.00
4- 4	0.48	0.73	0.06	0.00	0.00	0.00	0.73	0.00
4- 5	0.00	0.00	0.00	0.00	0.00	0.00	0.07	-0.07
4- 6	-0.48	-0.73	-0.06	0.00	0.00	0.00	0.00	-0.73
4- 7	-0.96	-1.46	-0.12	0.00	0.00	0.00	0.00	-1.43
4- 8	-1.43	-2.19	-0.18	0.00	0.00	0.00	0.00	-2.13
4- 9	-1.91	-2.92	-0.24	0.00	0.00	0.00	0.00	-2.84
4-10	-2.39	-3.66	-0.29	0.00	0.00	0.00	0.00	-3.54
Right								

Live Load Parameters: Traffic Direction is Parallel to Main Reinforcement
---

Vehicle	Axle No.	Weight (k/ft)	Length (ft)	Dist. From Previous (ft)	
Truck	1	0.988	4.28	0.00	(largest truck used)
	2	0.988	4.28	14.00	
	3	0.247	4.28	14.00	
Tandem	1	0.799	8.28	0.00	(largest truck used)

All Vehicles:
Distribution Width: 9.12 ft
Impact Factor : 1.21
Lane:
Lane Load : 0.000 k/ft Distribution Width: 0.00 ft

Truck Positions That Cause Maximum Results:

Maximum +Moment in Top Slab

Vehicle	Axle No.	Weight (k/ft)	Length (ft)	Dist. From Left End (ft)
Truck	1	0.247	4.28	22.42
	2	0.988	4.28	8.42
	3	0.988	4.28	-5.58

Coincident Bottom Slab Load: 0.25 k/ft

Maximum -Moment in Top Slab

Truck	1	0.247	4.28	21.58
	2	0.988	4.28	7.58
	3	0.988	4.28	-6.43

Coincident Bottom Slab Load: 0.25 k/ft

Maximum +Shear in Top Slab

Truck	1	0.247	4.28	30.14
	2	0.988	4.28	16.14
	3	0.988	4.28	2.14

Coincident Bottom Slab Load: 0.42 k/ft

Maximum -Shear in Top Slab

Truck	1	0.247	4.28	28.69
	2	0.988	4.28	14.69
	3	0.988	4.28	0.69

Coincident Bottom Slab Load: 0.42 k/ft

Maximum +Moment in Top Slab

Tandem	1	0.799	8.28	8.42

Coincident Bottom Slab Load: 0.39 k/ft

Maximum -Moment in Top Slab

Tandem	1	0.799	8.28	9.19

Coincident Bottom Slab Load: 0.39 k/ft

Maximum +Shear in Top Slab

Tandem 1 0.799 8.28 4.14
Coincident Bottom Slab Load: 0.39 k/ft

Maximum -Shear in Top Slab
Tandem 1 0.799 8.28 12.69
Coincident Bottom Slab Load: 0.39 k/ft

Unfactored Moments and Shears due to Live Loads: (k, k-ft) (Fill Depth = 3.00 ft)

	Truck				Tandem				Lane			
M-PT	Mll+	Mll-	Vll+	Vll-	Mll+	Mll-	Vll+	Vll-	Mll+	Mll-	Vll+	Vll-
Member 1: (Exterior Wall)												
Bottom												
1- 0	0.00	-6.81	0.46	-0.29	0.00	-6.14	0.19	-0.36	0.00	0.00	0.00	0.00
1- 1	0.00	-6.40	0.46	-0.29	0.00	-6.13	0.19	-0.36	0.00	0.00	0.00	0.00
1- 2	0.00	-6.00	0.46	-0.29	0.00	-6.13	0.19	-0.36	0.00	0.00	0.00	0.00
1- 3	0.00	-5.59	0.46	-0.29	0.00	-6.29	0.19	-0.36	0.00	0.00	0.00	0.00
1- 4	0.00	-5.19	0.46	-0.29	0.00	-6.52	0.19	-0.36	0.00	0.00	0.00	0.00
1- 5	0.00	-4.78	0.46	-0.29	0.00	-6.80	0.19	-0.36	0.00	0.00	0.00	0.00
1- 6	0.00	-4.79	0.46	-0.29	0.00	-7.09	0.19	-0.36	0.00	0.00	0.00	0.00
1- 7	0.00	-5.03	0.46	-0.29	0.00	-7.41	0.19	-0.36	0.00	0.00	0.00	0.00
1- 8	0.00	-5.28	0.46	-0.29	0.00	-7.72	0.19	-0.36	0.00	0.00	0.00	0.00
1- 9	0.00	-5.53	0.46	-0.29	0.00	-8.04	0.19	-0.36	0.00	0.00	0.00	0.00
1-10	0.08	-5.78	0.46	-0.29	0.07	-8.35	0.19	-0.36	0.00	0.00	0.00	0.00
Top												
Member 2: (Top Slab)												
Left												
2- 0	0.08	-5.78	3.95	0.00	0.07	-8.35	5.05	0.00	0.00	0.00	0.00	0.00
2- 1	2.62	-2.38	3.36	-0.07	2.16	-3.15	4.38	-0.06	0.00	0.00	0.00	0.00
2- 2	5.85	-0.13	2.90	-0.30	6.42	0.00	3.69	-0.24	0.00	0.00	0.00	0.00
2- 3	7.94	0.00	2.45	-0.68	9.87	0.00	2.98	-0.56	0.00	0.00	0.00	0.00
2- 4	9.35	0.00	1.99	-1.10	11.97	0.00	2.29	-1.02	0.00	0.00	0.00	0.00
2- 5	9.84	0.00	1.54	-1.54	12.70	0.00	1.61	-1.61	0.00	0.00	0.00	0.00
2- 6	9.35	0.00	1.10	-1.99	11.97	0.00	1.02	-2.29	0.00	0.00	0.00	0.00
2- 7	7.94	0.00	0.68	-2.45	9.87	0.00	0.56	-2.98	0.00	0.00	0.00	0.00
2- 8	5.85	-0.13	0.30	-2.90	6.42	0.00	0.24	-3.69	0.00	0.00	0.00	0.00
2- 9	2.62	-2.38	0.07	-3.36	2.16	-3.15	0.06	-4.38	0.00	0.00	0.00	0.00
2-10	0.08	-5.78	0.00	-3.95	0.07	-8.35	0.00	-5.05	0.00	0.00	0.00	0.00
Right												
Member 4: (Bottom Slab)												
Left												
4- 0	0.00	-6.81	3.54	0.00	0.00	-6.14	3.37	0.00	0.00	0.00	0.00	0.00
4- 1	0.25	-1.44	2.84	0.00	0.17	-1.02	2.71	0.00	0.00	0.00	0.00	0.00
4- 2	2.96	0.00	2.13	0.00	4.00	0.00	2.05	0.00	0.00	0.00	0.00	0.00
4- 3	5.88	0.00	1.43	0.00	6.73	0.00	1.39	0.00	0.00	0.00	0.00	0.00
4- 4	7.62	0.00	0.73	0.00	8.37	0.00	0.73	0.00	0.00	0.00	0.00	0.00
4- 5	8.18	0.00	0.06	-0.06	8.91	0.00	0.07	-0.07	0.00	0.00	0.00	0.00
4- 6	7.62	0.00	0.00	-0.73	8.37	0.00	0.00	-0.73	0.00	0.00	0.00	0.00
4- 7	5.88	0.00	0.00	-1.43	6.73	0.00	0.00	-1.39	0.00	0.00	0.00	0.00
4- 8	2.96	0.00	0.00	-2.13	4.00	0.00	0.00	-2.05	0.00	0.00	0.00	0.00
4- 9	0.25	-1.44	0.00	-2.84	0.17	-1.02	0.00	-2.71	0.00	0.00	0.00	0.00
4-10	0.00	-6.81	0.00	-3.54	0.00	-6.14	0.00	-3.37	0.00	0.00	0.00	0.00
Right												

Serviceability Check: Crack Control (Fill Depth = 3.00 ft)

Bar Mark	Location	Fss (ksi)	Spacing (in)	Allow (in)
A1	Top Corner Bar	14.09	6.00	22.79
A2	Bot Corner Bar	13.39	6.00	24.24
A100	Top Slab (int)	27.97	6.00	10.85
A300	Top Slab (ext)	0.00	12.00	2.38
A200	Bot Slab (int)	25.19	6.00	12.47
A400	Bot Slab (ext)	0.00	12.00	2.83
B1	Ext Wall (int)	9.57	8.00	38.04
B2	Ext Wall (ext)	22.63	6.00	11.30

Strength Limit State at Critical Sections: Flexure (Fill Depth = 3.00 ft)

Member 1: (Exterior Wall)
Thickness = 10.00 in

Loc	Dist. (in)	Design Moment (k-ft)	Corr. A. F. (k)	Mu (k-ft)	Ma (k-ft)	phi	As (in2)	1.2Mcr (k-ft)	Load Ratings IR (Str I)	OR (Str II)
BOT	15.00	-24.02	15.62	31.00	31.82	0.90	0.88	16.55	1.71	2.21
MID	54.00	0.00	4.62	18.40	17.77	0.90	0.47	16.55	NC	NC
MID-	54.00	-21.07	15.62	31.27	32.06	0.90	0.88	16.55	1.89	2.45
TOP	15.00	-24.79	15.62	31.27	32.06	0.90	0.88	16.55	1.53	1.98

Member 2: (Top Slab)
Thickness = 12.00 in

Loc	Dist. (in)	Design Moment (k-ft)	Corr. A. F. (k)	Mu (k-ft)	Ma (k-ft)	phi	As (in2)	1.2Mcr (k-ft)	Load Ratings IR (Str I)	OR (Str II)
LT	14.00	-15.90	4.70	40.07	37.49	0.90	0.88	23.83	3.25	4.21
MID	101.00	38.18	0.66	56.14	50.71	0.90	1.20	23.83	1.56	2.03
RT	14.00	-15.90	4.70	40.07	37.49	0.90	0.88	23.83	3.25	4.21

Member 4: (Bottom Slab)
Thickness = 12.00 in

Loc	Dist. (in)	Design Moment (k-ft)	Corr. A. F. (k)	Mu (k-ft)	Ma (k-ft)	phi	As (in2)	1.2Mcr (k-ft)	Load Ratings IR (Str I)	OR (Str II)
LT	14.00	-15.38	7.08	40.07	38.21	0.90	0.88	23.83	4.41	5.71
MID	101.00	33.70	2.57	56.14	51.26	0.90	1.20	23.83	2.13	2.76
RT	14.00	-15.38	7.08	40.07	38.21	0.90	0.88	23.83	4.41	5.71

Note: Mu - Resisting moment under pure flexure, Ma - Allowable moment under applied axial load

Strength Limit State at Critical Sections: Vertical Shear (Fill Depth = 3.00 ft)

Member 1: (Exterior Wall)
Thickness = 10.00 in (Controlling Shear Method: Simplfied)

Loc	Dist. (in)	Design Shear (k)	Dv (in)	phi*Vn (k)	Vc (k)	Vs (k)	Av (in2)	Max. Spac (in)	Load Ratings IR (Str I)	OR (Str II)
BOT	22.20	4.30	7.20	10.99	12.21	0.00	0.00	0.00	4.75	6.15
MID	54.00	1.01	7.91	12.08	13.42	0.00	0.00	0.00	NC	NC
MID-	54.00	1.01	7.20	10.99	12.21	0.00	0.00	0.00	16.92	21.93
TOP	22.20	-3.23	7.20	10.99	12.21	0.00	0.00	0.00	12.36	16.02

Member 2: (Top Slab)
Thickness = 12.00 in (Controlling Shear Method: Box Culvert)

Loc	Dist. (in)	Design Shear (k)	Dv (in)	phi*Vn (k)	Vc (k)	Vs (k)	Av (in2)	Max. Spac (in)	Load Ratings IR (Str I)	OR (Str II)
LT	22.64	12.77	9.63	22.04	24.48	0.00	0.00	0.00	2.23	2.89
MID	101.00	2.83	10.06	23.04	25.60	0.00	0.00	0.00	8.15	10.57
RT	22.64	12.77	9.63	22.04	24.48	0.00	0.00	0.00	2.23	2.89

Member 4: (Bottom Slab)
Thickness = 12.00 in (Controlling Shear Method: Box Culvert)

Loc	Dist. (in)	Design Shear (k)	Dv (in)	phi*Vn (k)	Vc (k)	Vs (k)	Av (in2)	Max. Spac (in)	Load Ratings IR (Str I)	OR (Str II)
LT	22.64	11.16	9.63	22.04	24.48	0.00	0.00	0.00	3.26	4.23
MID	101.00	0.11	10.06	23.04	25.60	0.00	0.00	0.00	99.99	99.99
RT	22.64	11.16	9.63	22.04	24.48	0.00	0.00	0.00	3.26	4.23

Load Combination Results at Tenth Points: (k, k-ft)(Fill Depth = 3.00 ft)

M-PT	+Moment	-Moment	+Axial	-Axial	+Shear	-Shear
Member 1: (Exterior Wall)						
Bottom						
1- 0	-14.090	-30.474	4.617	15.615	7.076	2.569
1- 1	-9.188	-24.958	4.617	15.615	5.680	1.859
1- 2	-5.507	-22.538	4.617	15.615	4.365	1.203
1- 3	-2.973	-21.424	4.617	15.615	3.130	0.600
1- 4	-1.513	-20.974	4.617	15.615	1.977	0.052
1- 5	-1.055	-21.064	4.617	15.615	1.008	-0.547
1- 6	-1.527	-21.602	4.617	15.615	0.567	-1.539
1- 7	-2.855	-22.549	4.617	15.615	0.180	-2.450
1- 8	-4.967	-23.822	4.617	15.615	-0.153	-3.280
1- 9	-7.790	-25.409	4.617	15.615	-0.433	-4.030
1-10	-11.251	-29.323	4.617	15.615	-0.658	-4.699
Top						
Member 2: (Top Slab)						
Left						
2- 0	-11.251	-29.323	4.173	4.699	15.615	4.617
2- 1	2.312	-9.960	0.658	4.699	13.082	3.694
2- 2	16.941	1.185	0.658	4.173	10.514	2.770
2- 3	28.676	5.071	0.658	4.173	7.932	1.524
2- 4	35.757	7.403	0.658	4.173	5.362	-0.569
2- 5	38.184	8.180	0.658	4.173	2.825	-2.825
2- 6	35.757	7.403	0.658	4.173	0.569	-5.362
2- 7	28.676	5.071	0.658	4.173	-1.524	-7.932
2- 8	16.941	1.185	0.658	4.173	-2.770	-10.514
2- 9	2.312	-9.960	0.658	4.699	-3.694	-13.082
2-10	-11.251	-29.323	4.173	4.699	-4.617	-15.615
Right						
Member 4: (Bottom Slab)						
Left						
4- 0	-14.090	-30.474	6.151	7.076	14.371	5.630
4- 1	-3.490	-8.696	2.569	7.076	11.504	4.504
4- 2	12.715	1.073	2.569	6.151	8.638	3.378
4- 3	24.372	5.812	2.569	6.151	5.771	2.252
4- 4	31.365	8.655	2.569	6.151	2.908	1.126
4- 5	33.696	9.602	2.569	6.151	0.115	-0.115
4- 6	31.365	8.655	2.569	6.151	-1.126	-2.908
4- 7	24.372	5.812	2.569	6.151	-2.252	-5.771
4- 8	12.715	1.073	2.569	6.151	-3.378	-8.638
4- 9	-3.490	-8.696	2.569	7.076	-4.504	-11.504
4-10	-14.090	-30.474	6.151	7.076	-5.630	-14.371
Right						

ANALYSIS RESULTS (Fill Depth = 4.00 ft)
==========

Load Parameters:

Fe = 1.05

Unfactored Moments due to All Loads: (k-ft) (Fill Depth = 4.00 ft)

M-PT	Mdc	Mev	Mdw	Meh	Mls	Mwa	Mll+	Mll-
Member 1: (Exterior Wall)								
Bottom								
1- 0	-4.52	-8.30	-0.50	-2.36	-0.74	0.00	0.00	-5.32
1- 1	-4.23	-8.30	-0.50	0.34	0.03	0.00	0.00	-5.18
1- 2	-3.94	-8.30	-0.50	2.30	0.62	0.00	0.00	-5.22
1- 3	-3.65	-8.30	-0.50	3.57	1.05	0.00	0.00	-5.34
1- 4	-3.37	-8.30	-0.50	4.21	1.30	0.00	0.00	-5.53
1- 5	-3.08	-8.30	-0.50	4.28	1.39	0.00	0.00	-5.75
1- 6	-2.79	-8.30	-0.50	3.82	1.30	0.00	0.00	-5.98
1- 7	-2.50	-8.30	-0.50	2.89	1.05	0.00	0.00	-6.22
1- 8	-2.21	-8.30	-0.50	1.54	0.62	0.00	0.00	-6.47
1- 9	-1.92	-8.30	-0.50	-0.17	0.03	0.00	0.00	-6.71
1-10	-1.63	-8.30	-0.50	-2.19	-0.74	0.00	0.06	-6.96
Top								
Member 2: (Top Slab)								
Left								
2- 0	-1.63	-8.30	-0.50	-2.19	-0.74	0.00	0.06	-6.96
2- 1	0.28	-0.84	-0.05	-2.19	-0.74	0.00	1.81	-2.51
2- 2	1.77	4.97	0.30	-2.19	-0.74	0.00	5.01	-0.05
2- 3	2.83	9.11	0.54	-2.19	-0.74	0.00	7.95	0.00
2- 4	3.47	11.60	0.69	-2.19	-0.74	0.00	9.74	0.00
2- 5	3.68	12.43	0.74	-2.19	-0.74	0.00	10.34	0.00
2- 6	3.47	11.60	0.69	-2.19	-0.74	0.00	9.74	0.00
2- 7	2.83	9.11	0.54	-2.19	-0.74	0.00	7.95	0.00
2- 8	1.77	4.97	0.30	-2.19	-0.74	0.00	5.01	-0.05
2- 9	0.28	-0.84	-0.05	-2.19	-0.74	0.00	1.81	-2.51
2-10	-1.63	-8.30	-0.50	-2.19	-0.74	0.00	0.06	-6.96
Right								
Member 4: (Bottom Slab)								
Left								
4- 0	-4.52	-8.30	-0.50	-2.36	-0.74	0.00	0.00	-5.32
4- 1	-0.91	-0.84	-0.05	-2.36	-0.74	0.00	0.19	-1.08
4- 2	1.91	4.97	0.30	-2.36	-0.74	0.00	3.38	0.00
4- 3	3.92	9.11	0.54	-2.36	-0.74	0.00	5.74	0.00
4- 4	5.12	11.60	0.69	-2.36	-0.74	0.00	7.16	0.00
4- 5	5.52	12.43	0.74	-2.36	-0.74	0.00	7.63	0.00
4- 6	5.12	11.60	0.69	-2.36	-0.74	0.00	7.16	0.00
4- 7	3.92	9.11	0.54	-2.36	-0.74	0.00	5.74	0.00
4- 8	1.91	4.97	0.30	-2.36	-0.74	0.00	3.38	0.00
4- 9	-0.91	-0.84	-0.05	-2.36	-0.74	0.00	0.19	-1.08
4-10	-4.52	-8.30	-0.50	-2.36	-0.74	0.00	0.00	-5.32
Right								

Unfactored Shears due to All Loads: (k-ft) (Fill Depth = 4.00 ft)

M-PT	Vdc	Vev	Vdw	Veh	Vls	Vwa	Vll+	Vll-
Member 1: (Exterior Wall)								
Bottom								
1- 0	0.32	0.00	0.00	3.43	0.94	0.00	0.31	-0.28
1- 1	0.32	0.00	0.00	2.58	0.76	0.00	0.31	-0.28
1- 2	0.32	0.00	0.00	1.79	0.57	0.00	0.31	-0.28
1- 3	0.32	0.00	0.00	1.06	0.38	0.00	0.31	-0.28
1- 4	0.32	0.00	0.00	0.38	0.19	0.00	0.31	-0.28
1- 5	0.32	0.00	0.00	-0.23	0.00	0.00	0.31	-0.28
1- 6	0.32	0.00	0.00	-0.78	-0.19	0.00	0.31	-0.28
1- 7	0.32	0.00	0.00	-1.28	-0.38	0.00	0.31	-0.28
1- 8	0.32	0.00	0.00	-1.71	-0.57	0.00	0.31	-0.28
1- 9	0.32	0.00	0.00	-2.08	-0.76	0.00	0.31	-0.28
1-10	0.32	0.00	0.00	-2.40	-0.95	0.00	0.31	-0.28
Top								
Member 2: (Top Slab)								
Left								
2- 0	1.26	4.93	0.29	0.00	0.00	0.00	4.15	0.00

2- 1	1.01	3.94	0.24	0.00	0.00	0.00	3.57	-0.05
2- 2	0.76	2.96	0.18	0.00	0.00	0.00	2.97	-0.20
2- 3	0.51	1.97	0.12	0.00	0.00	0.00	2.37	-0.47
2- 4	0.25	0.99	0.06	0.00	0.00	0.00	1.78	-0.82
2- 5	0.00	0.00	0.00	0.00	0.00	0.00	1.22	-1.22
2- 6	-0.25	-0.99	-0.06	0.00	0.00	0.00	0.82	-1.78
2- 7	-0.51	-1.97	-0.12	0.00	0.00	0.00	0.47	-2.37
2- 8	-0.76	-2.96	-0.18	0.00	0.00	0.00	0.20	-2.97
2- 9	-1.01	-3.94	-0.24	0.00	0.00	0.00	0.05	-3.57
2-10	-1.26	-4.93	-0.29	0.00	0.00	0.00	0.00	-4.15

Right

Member 4: (Bottom Slab)
Left

4- 0	2.39	4.93	0.29	0.00	0.00	0.00	2.90	0.00
4- 1	1.91	3.94	0.24	0.00	0.00	0.00	2.33	0.00
4- 2	1.43	2.96	0.18	0.00	0.00	0.00	1.76	0.00
4- 3	0.96	1.97	0.12	0.00	0.00	0.00	1.19	0.00
4- 4	0.48	0.99	0.06	0.00	0.00	0.00	0.62	0.00
4- 5	0.00	0.00	0.00	0.00	0.00	0.00	0.05	-0.05
4- 6	-0.48	-0.99	-0.06	0.00	0.00	0.00	0.00	-0.62
4- 7	-0.96	-1.97	-0.12	0.00	0.00	0.00	0.00	-1.19
4- 8	-1.43	-2.96	-0.18	0.00	0.00	0.00	0.00	-1.76
4- 9	-1.91	-3.94	-0.24	0.00	0.00	0.00	0.00	-2.33
4-10	-2.39	-4.93	-0.29	0.00	0.00	0.00	0.00	-2.90

Right

Live Load Parameters: Traffic Direction is Parallel to Main Reinforcement
---

Vehicle	Axle No.	Weight (k/ft)	Length (ft)	Dist. From Previous (ft)	
Truck	1	0.671	5.43	0.00	(largest truck used)
	2	0.671	5.43	14.00	
	3	0.168	5.43	14.00	
Tandem	1	0.604	9.43	0.00	(largest truck used)

All Vehicles:
Distribution Width: 12.27 ft
Impact Factor : 1.17
Lane:
Lane Load : 0.000 k/ft Distribution Width: 0.00 ft

Truck Positions That Cause Maximum Results:

Maximum +Moment in Top Slab

Vehicle	Axle No.	Weight (k/ft)	Length (ft)	Dist. From Left End (ft)
Truck	1	0.168	5.43	22.42
	2	0.671	5.43	8.42
	3	0.671	5.43	-5.58

Coincident Bottom Slab Load: 0.22 k/ft

Maximum -Moment in Top Slab

Truck	1	0.168	5.43	21.58
	2	0.671	5.43	7.58
	3	0.671	5.43	-6.43

Coincident Bottom Slab Load: 0.22 k/ft

Maximum +Shear in Top Slab

Truck	1	0.168	5.43	30.72
	2	0.671	5.43	16.72
	3	0.671	5.43	2.72

Coincident Bottom Slab Load: 0.33 k/ft

Maximum -Shear in Top Slab

Truck	1	0.168	5.43	28.12
	2	0.671	5.43	14.12
	3	0.671	5.43	0.12

Coincident Bottom Slab Load: 0.33 k/ft

Maximum +Moment in Top Slab

Tandem	1	0.604	9.43	8.42

Coincident Bottom Slab Load: 0.34 k/ft

Maximum -Moment in Top Slab

Tandem	1	0.604	9.43	8.93

Coincident Bottom Slab Load: 0.34 k/ft

Maximum +Shear in Top Slab

Tandem 1 0.604 9.43 4.72
Coincident Bottom Slab Load: 0.34 k/ft

Maximum -Shear in Top Slab
Tandem 1 0.604 9.43 12.12
Coincident Bottom Slab Load: 0.34 k/ft

Unfactored Moments and Shears due to Live Loads: (k, k-ft) (Fill Depth = 4.00 ft)

	Truck				Tandem				Lane			
M-PT	Mll+	Mll-	Vll+	Vll-	Mll+	Mll-	Vll+	Vll-	Mll+	Mll-	Vll+	Vll-
Member 1: (Exterior Wall)												
Bottom												
1- 0	0.00	-5.32	0.31	-0.24	0.00	-5.14	0.14	-0.28	0.00	0.00	0.00	0.00
1- 1	0.00	-5.07	0.31	-0.24	0.00	-5.18	0.14	-0.28	0.00	0.00	0.00	0.00
1- 2	0.00	-4.82	0.31	-0.24	0.00	-5.22	0.14	-0.28	0.00	0.00	0.00	0.00
1- 3	0.00	-4.57	0.31	-0.24	0.00	-5.34	0.14	-0.28	0.00	0.00	0.00	0.00
1- 4	0.00	-4.32	0.31	-0.24	0.00	-5.53	0.14	-0.28	0.00	0.00	0.00	0.00
1- 5	0.00	-4.07	0.31	-0.24	0.00	-5.75	0.14	-0.28	0.00	0.00	0.00	0.00
1- 6	0.00	-4.08	0.31	-0.24	0.00	-5.98	0.14	-0.28	0.00	0.00	0.00	0.00
1- 7	0.00	-4.28	0.31	-0.24	0.00	-6.22	0.14	-0.28	0.00	0.00	0.00	0.00
1- 8	0.00	-4.48	0.31	-0.24	0.00	-6.47	0.14	-0.28	0.00	0.00	0.00	0.00
1- 9	0.00	-4.69	0.31	-0.24	0.00	-6.71	0.14	-0.28	0.00	0.00	0.00	0.00
1-10	0.06	-4.89	0.31	-0.24	0.05	-6.96	0.14	-0.28	0.00	0.00	0.00	0.00
Top												
Member 2: (Top Slab)												
Left												
2- 0	0.06	-4.89	3.24	0.00	0.05	-6.96	4.15	0.00	0.00	0.00	0.00	0.00
2- 1	1.81	-1.98	2.76	-0.05	1.63	-2.51	3.57	-0.05	0.00	0.00	0.00	0.00
2- 2	4.61	-0.05	2.36	-0.20	5.01	0.00	2.97	-0.18	0.00	0.00	0.00	0.00
2- 3	6.45	0.00	1.97	-0.47	7.95	0.00	2.37	-0.42	0.00	0.00	0.00	0.00
2- 4	7.62	0.00	1.58	-0.82	9.74	0.00	1.78	-0.77	0.00	0.00	0.00	0.00
2- 5	8.03	0.00	1.20	-1.20	10.34	0.00	1.22	-1.22	0.00	0.00	0.00	0.00
2- 6	7.62	0.00	0.82	-1.58	9.74	0.00	0.77	-1.78	0.00	0.00	0.00	0.00
2- 7	6.45	0.00	0.47	-1.97	7.95	0.00	0.42	-2.37	0.00	0.00	0.00	0.00
2- 8	4.61	-0.05	0.20	-2.36	5.01	0.00	0.18	-2.97	0.00	0.00	0.00	0.00
2- 9	1.81	-1.98	0.05	-2.76	1.63	-2.51	0.05	-3.57	0.00	0.00	0.00	0.00
2-10	0.06	-4.89	0.00	-3.24	0.05	-6.96	0.00	-4.15	0.00	0.00	0.00	0.00
Right												
Member 4: (Bottom Slab)												
Left												
4- 0	0.00	-5.32	2.80	0.00	0.00	-5.14	2.90	0.00	0.00	0.00	0.00	0.00
4- 1	0.19	-1.08	2.24	0.00	0.07	-0.77	2.33	0.00	0.00	0.00	0.00	0.00
4- 2	2.49	0.00	1.69	0.00	3.38	0.00	1.76	0.00	0.00	0.00	0.00	0.00
4- 3	4.78	0.00	1.14	0.00	5.74	0.00	1.19	0.00	0.00	0.00	0.00	0.00
4- 4	6.14	0.00	0.58	0.00	7.16	0.00	0.62	0.00	0.00	0.00	0.00	0.00
4- 5	6.57	0.00	0.05	-0.05	7.63	0.00	0.05	-0.05	0.00	0.00	0.00	0.00
4- 6	6.14	0.00	0.00	-0.58	7.16	0.00	0.00	-0.62	0.00	0.00	0.00	0.00
4- 7	4.78	0.00	0.00	-1.14	5.74	0.00	0.00	-1.19	0.00	0.00	0.00	0.00
4- 8	2.49	0.00	0.00	-1.69	3.38	0.00	0.00	-1.76	0.00	0.00	0.00	0.00
4- 9	0.19	-1.08	0.00	-2.24	0.07	-0.77	0.00	-2.33	0.00	0.00	0.00	0.00
4-10	0.00	-5.32	0.00	-2.80	0.00	-5.14	0.00	-2.90	0.00	0.00	0.00	0.00
Right												

Serviceability Check: Crack Control (Fill Depth = 4.00 ft)

Bar Mark	Location	Fss (ksi)	Spacing (in)	Allow (in)
A1	Top Corner Bar	14.24	6.00	22.50
A2	Bot Corner Bar	13.83	6.00	23.32
A100	Top Slab (int)	28.65	6.00	10.50
A300	Top Slab (ext)	0.00	12.00	2.32
A200	Bot Slab (int)	27.09	6.00	11.33
A400	Bot Slab (ext)	0.00	12.00	2.60
B1	Ext Wall (int)	13.83	8.00	25.21
B2	Ext Wall (ext)	24.24	6.00	10.24

Strength Limit State at Critical Sections: Flexure (Fill Depth = 4.00 ft)

Member 1: (Exterior Wall)
Thickness = 10.00 in

Loc	Dist. (in)	Design Moment (k-ft)	Corr. A. F. (k)	Mu (k-ft)	Ma (k-ft)	phi	As (in2)	1.2Mcr (k-ft)	Load Ratings IR (Str I)	OR (Str II)
BOT	15.00	-24.79	15.69	31.00	31.84	0.90	0.88	16.55	1.78	2.30
MID	54.00	0.00	5.76	18.40	18.07	0.90	0.47	16.55	NC	NC
MID-	54.00	-21.63	15.69	31.27	32.07	0.90	0.88	16.55	2.00	2.59
TOP	15.00	-25.23	15.69	31.27	32.07	0.90	0.88	16.55	1.59	2.06

Member 2: (Top Slab)
Thickness = 12.00 in

Loc	Dist. (in)	Design Moment (k-ft)	Corr. A. F. (k)	Mu (k-ft)	Ma (k-ft)	phi	As (in2)	1.2Mcr (k-ft)	Load Ratings IR (Str I)	OR (Str II)
LT	14.00	-15.77	4.98	40.07	37.57	0.90	0.88	23.83	3.70	4.79
MID	101.00	38.01	1.21	56.14	50.87	0.90	1.20	23.83	1.71	2.22
RT	14.00	-15.77	4.98	40.07	37.57	0.90	0.88	23.83	3.70	4.79

Member 4: (Bottom Slab)
Thickness = 12.00 in

Loc	Dist. (in)	Design Moment (k-ft)	Corr. A. F. (k)	Mu (k-ft)	Ma (k-ft)	phi	As (in2)	1.2Mcr (k-ft)	Load Ratings IR (Str I)	OR (Str II)
LT	14.00	-15.52	7.23	40.07	38.26	0.90	0.88	23.83	5.16	6.69
MID	101.00	35.40	2.99	56.14	51.38	0.90	1.20	23.83	2.20	2.85
RT	14.00	-15.52	7.23	40.07	38.26	0.90	0.88	23.83	5.16	6.69

Note: Mu - Resisting moment under pure flexure, Ma - Allowable moment under applied axial load

Strength Limit State at Critical Sections: Vertical Shear (Fill Depth = 4.00 ft)

Member 1: (Exterior Wall)
Thickness = 10.00 in (Controlling Shear Method: Simplfied)

Loc	Dist. (in)	Design Shear (k)	Dv (in)	phi*Vn (k)	Vc (k)	Vs (k)	Av (in2)	Max. Spac (in)	Load Ratings IR (Str I)	OR (Str II)
BOT	22.20	4.28	7.20	10.99	12.21	0.00	0.00	0.00	5.43	7.04
MID	54.00	0.74	7.91	12.08	13.42	0.00	0.00	0.00	NC	NC
MID-	54.00	0.74	7.20	10.99	12.21	0.00	0.00	0.00	21.71	28.14
TOP	22.20	-3.34	7.20	10.99	12.21	0.00	0.00	0.00	18.22	23.62

Member 2: (Top Slab)
Thickness = 12.00 in (Controlling Shear Method: Box Culvert)

Loc	Dist. (in)	Design Shear (k)	Dv (in)	phi*Vn (k)	Vc (k)	Vs (k)	Av (in2)	Max. Spac (in)	Load Ratings IR (Str I)	OR (Str II)
LT	22.64	12.65	9.63	22.04	24.48	0.00	0.00	0.00	2.54	3.29
MID	101.00	2.14	10.06	23.04	25.60	0.00	0.00	0.00	10.78	13.97
RT	22.64	12.65	9.63	22.04	24.48	0.00	0.00	0.00	2.54	3.29

Member 4: (Bottom Slab)
Thickness = 12.00 in (Controlling Shear Method: Box Culvert)

Loc	Dist. (in)	Design Shear (k)	Dv (in)	phi*Vn (k)	Vc (k)	Vs (k)	Av (in2)	Max. Spac (in)	Load Ratings IR (Str I)	OR (Str II)
LT	22.64	11.58	9.63	22.04	24.48	0.00	0.00	0.00	3.65	4.73
MID	101.00	0.09	10.06	23.04	25.60	0.00	0.00	0.00	99.99	99.99
RT	22.64	11.58	9.63	22.04	24.48	0.00	0.00	0.00	3.65	4.73

Load Combination Results at Tenth Points: (k, k-ft)(Fill Depth = 4.00 ft)

M-PT	+Moment	-Moment	+Axial	-Axial	+Shear	-Shear
Member 1: (Exterior Wall)						
Bottom						
1- 0	-16.351	-30.995	5.762	15.687	7.231	2.993
1- 1	-11.105	-25.591	5.762	15.687	5.750	2.227
1- 2	-7.156	-23.534	5.762	15.687	4.349	1.514
1- 3	-4.430	-22.233	5.762	15.687	3.030	0.854
1- 4	-2.856	-21.626	5.762	15.687	1.791	0.249
1- 5	-2.360	-21.591	5.762	15.687	0.737	-0.406
1- 6	-2.870	-22.050	5.762	15.687	0.239	-1.483
1- 7	-4.313	-22.949	5.762	15.687	-0.204	-2.479
1- 8	-6.616	-24.228	5.762	15.687	-0.594	-3.395
1- 9	-9.707	-25.866	5.762	15.687	-0.930	-4.229
1-10	-13.512	-30.011	5.762	15.687	-1.212	-4.983
Top						
Member 2: (Top Slab)						
Left						
2- 0	-13.512	-30.011	4.599	4.983	15.687	5.762
2- 1	0.389	-9.461	1.212	4.983	12.980	4.609
2- 2	15.916	2.006	1.212	4.599	10.249	3.457
2- 3	28.150	6.856	1.212	4.599	7.514	2.305
2- 4	35.536	9.766	1.212	4.599	4.796	0.244
2- 5	38.008	10.736	1.212	4.599	2.138	-2.138
2- 6	35.536	9.766	1.212	4.599	-0.244	-4.796
2- 7	28.150	6.856	1.212	4.599	-2.305	-7.514
2- 8	15.916	2.006	1.212	4.599	-3.457	-10.249
2- 9	0.389	-9.461	1.212	4.983	-4.609	-12.980
2-10	-13.512	-30.011	4.599	4.983	-5.762	-15.687
Right						
Member 4: (Bottom Slab)						
Left						
4- 0	-16.351	-30.995	6.576	7.231	14.901	6.774
4- 1	-4.100	-8.671	2.993	7.231	11.938	5.419
4- 2	13.078	1.895	2.993	6.576	8.974	4.065
4- 3	25.483	7.596	2.993	6.576	6.011	2.710
4- 4	32.923	11.017	2.993	6.576	3.048	1.355
4- 5	35.402	12.158	2.993	6.576	0.087	-0.087
4- 6	32.923	11.017	2.993	6.576	-1.355	-3.048
4- 7	25.483	7.596	2.993	6.576	-2.710	-6.011
4- 8	13.078	1.895	2.993	6.576	-4.065	-8.974
4- 9	-4.100	-8.671	2.993	7.231	-5.419	-11.938
4-10	-16.351	-30.995	6.576	7.231	-6.774	-14.901
Right						

ANALYSIS RESULTS (Fill Depth = 5.00 ft)
==========

Load Parameters:

Fe = 1.06

Unfactored Moments due to All Loads: (k-ft) (Fill Depth = 5.00 ft)

M-PT	Mdc	Mev	Mdw	Meh	Mls	Mwa	Mll+	Mll-
Member 1: (Exterior Wall)								
Bottom								
1- 0	-4.52	-10.49	-0.50	-2.61	-0.74	0.00	0.00	-4.41
1- 1	-4.23	-10.49	-0.50	0.35	0.03	0.00	0.00	-4.47
1- 2	-3.94	-10.49	-0.50	2.50	0.62	0.00	0.00	-4.54
1- 3	-3.65	-10.49	-0.50	3.92	1.05	0.00	0.00	-4.63
1- 4	-3.37	-10.49	-0.50	4.65	1.30	0.00	0.00	-4.78
1- 5	-3.08	-10.49	-0.50	4.74	1.39	0.00	0.00	-4.96
1- 6	-2.79	-10.49	-0.50	4.25	1.30	0.00	0.00	-5.14
1- 7	-2.50	-10.49	-0.50	3.24	1.05	0.00	0.00	-5.33
1- 8	-2.21	-10.49	-0.50	1.75	0.62	0.00	0.00	-5.52
1- 9	-1.92	-10.49	-0.50	-0.16	0.03	0.00	0.00	-5.72
1-10	-1.63	-10.49	-0.50	-2.44	-0.74	0.00	0.04	-5.91
Top								
Member 2: (Top Slab)								
Left								
2- 0	-1.63	-10.49	-0.50	-2.44	-0.74	0.00	0.04	-5.91
2- 1	0.28	-1.06	-0.05	-2.44	-0.74	0.00	1.32	-2.02
2- 2	1.77	6.27	0.30	-2.44	-0.74	0.00	3.98	0.00
2- 3	2.83	11.51	0.54	-2.44	-0.74	0.00	6.55	0.00
2- 4	3.47	14.66	0.69	-2.44	-0.74	0.00	8.10	0.00
2- 5	3.68	15.71	0.74	-2.44	-0.74	0.00	8.62	0.00
2- 6	3.47	14.66	0.69	-2.44	-0.74	0.00	8.10	0.00
2- 7	2.83	11.51	0.54	-2.44	-0.74	0.00	6.55	0.00
2- 8	1.77	6.27	0.30	-2.44	-0.74	0.00	3.98	0.00
2- 9	0.28	-1.06	-0.05	-2.44	-0.74	0.00	1.32	-2.02
2-10	-1.63	-10.49	-0.50	-2.44	-0.74	0.00	0.04	-5.91
Right								
Member 4: (Bottom Slab)								
Left								
4- 0	-4.52	-10.49	-0.50	-2.61	-0.74	0.00	0.00	-4.41
4- 1	-0.91	-1.06	-0.05	-2.61	-0.74	0.00	0.14	-0.83
4- 2	1.91	6.27	0.30	-2.61	-0.74	0.00	2.92	0.00
4- 3	3.92	11.51	0.54	-2.61	-0.74	0.00	5.01	0.00
4- 4	5.12	14.66	0.69	-2.61	-0.74	0.00	6.26	0.00
4- 5	5.52	15.71	0.74	-2.61	-0.74	0.00	6.68	0.00
4- 6	5.12	14.66	0.69	-2.61	-0.74	0.00	6.26	0.00
4- 7	3.92	11.51	0.54	-2.61	-0.74	0.00	5.01	0.00
4- 8	1.91	6.27	0.30	-2.61	-0.74	0.00	2.92	0.00
4- 9	-0.91	-1.06	-0.05	-2.61	-0.74	0.00	0.14	-0.83
4-10	-4.52	-10.49	-0.50	-2.61	-0.74	0.00	0.00	-4.41
Right								

Unfactored Shears due to All Loads: (k-ft) (Fill Depth = 5.00 ft)

M-PT	Vdc	Vev	Vdw	Veh	Vls	Vwa	Vll+	Vll-
Member 1: (Exterior Wall)								
Bottom								
1- 0	0.32	0.00	0.00	3.75	0.94	0.00	0.21	-0.22
1- 1	0.32	0.00	0.00	2.83	0.76	0.00	0.21	-0.22
1- 2	0.32	0.00	0.00	1.98	0.57	0.00	0.21	-0.22
1- 3	0.32	0.00	0.00	1.18	0.38	0.00	0.21	-0.22
1- 4	0.32	0.00	0.00	0.45	0.19	0.00	0.21	-0.22
1- 5	0.32	0.00	0.00	-0.23	0.00	0.00	0.21	-0.22
1- 6	0.32	0.00	0.00	-0.85	-0.19	0.00	0.21	-0.22
1- 7	0.32	0.00	0.00	-1.40	-0.38	0.00	0.21	-0.22
1- 8	0.32	0.00	0.00	-1.90	-0.57	0.00	0.21	-0.22
1- 9	0.32	0.00	0.00	-2.33	-0.76	0.00	0.21	-0.22
1-10	0.32	0.00	0.00	-2.71	-0.95	0.00	0.21	-0.22
Top								
Member 2: (Top Slab)								
Left								
2- 0	1.26	6.23	0.29	0.00	0.00	0.00	3.48	0.00

2- 1	1.01	4.98	0.24	0.00	0.00	0.00	2.96	-0.04
2- 2	0.76	3.74	0.18	0.00	0.00	0.00	2.44	-0.15
2- 3	0.51	2.49	0.12	0.00	0.00	0.00	1.91	-0.34
2- 4	0.25	1.25	0.06	0.00	0.00	0.00	1.40	-0.62
2- 5	0.00	0.00	0.00	0.00	0.00	0.00	0.96	-0.96
2- 6	-0.25	-1.25	-0.06	0.00	0.00	0.00	0.62	-1.40
2- 7	-0.51	-2.49	-0.12	0.00	0.00	0.00	0.34	-1.91
2- 8	-0.76	-3.74	-0.18	0.00	0.00	0.00	0.15	-2.44
2- 9	-1.01	-4.98	-0.24	0.00	0.00	0.00	0.04	-2.96
2-10	-1.26	-6.23	-0.29	0.00	0.00	0.00	0.00	-3.48

Right

Member 4: (Bottom Slab)
Left

4- 0	2.39	6.23	0.29	0.00	0.00	0.00	2.55	0.00
4- 1	1.91	4.98	0.24	0.00	0.00	0.00	2.04	0.00
4- 2	1.43	3.74	0.18	0.00	0.00	0.00	1.54	0.00
4- 3	0.96	2.49	0.12	0.00	0.00	0.00	1.04	0.00
4- 4	0.48	1.25	0.06	0.00	0.00	0.00	0.54	0.00
4- 5	0.00	0.00	0.00	0.00	0.00	0.00	0.04	-0.04
4- 6	-0.48	-1.25	-0.06	0.00	0.00	0.00	0.00	-0.54
4- 7	-0.96	-2.49	-0.12	0.00	0.00	0.00	0.00	-1.04
4- 8	-1.43	-3.74	-0.18	0.00	0.00	0.00	0.00	-1.54
4- 9	-1.91	-4.98	-0.24	0.00	0.00	0.00	0.00	-2.04
4-10	-2.39	-6.23	-0.29	0.00	0.00	0.00	0.00	-2.55

Right

Live Load Parameters: Traffic Direction is Parallel to Main Reinforcement
---

Vehicle	Axle No.	Weight (k/ft)	Length (ft)	Dist. From Previous (ft)	
Truck	1	0.489	6.58	0.00	(largest truck used)
	2	0.489	6.58	14.00	
	3	0.122	6.58	14.00	
Tandem	1	0.475	10.58	0.00	(largest truck used)

All Vehicles:
Distribution Width: 13.42 ft
Impact Factor : 1.12
Lane:
Lane Load : 0.000 k/ft Distribution Width: 0.00 ft

Truck Positions That Cause Maximum Results:

Maximum +Moment in Top Slab

Vehicle	Axle No.	Weight (k/ft)	Length (ft)	Dist. From Left End (ft)
Truck	1	0.122	6.58	22.42
	2	0.489	6.58	8.42
	3	0.489	6.58	-5.58

Coincident Bottom Slab Load: 0.19 k/ft

Maximum -Moment in Top Slab

Truck	1	0.122	6.58	23.18
	2	0.489	6.58	9.18
	3	0.489	6.58	-4.82

Coincident Bottom Slab Load: 0.19 k/ft

Maximum +Shear in Top Slab

Truck	1	0.122	6.58	31.29
	2	0.489	6.58	17.29
	3	0.489	6.58	3.29

Coincident Bottom Slab Load: 0.27 k/ft

Maximum -Shear in Top Slab

Truck	1	0.122	6.58	27.54
	2	0.489	6.58	13.54
	3	0.489	6.58	-0.46

Coincident Bottom Slab Load: 0.27 k/ft

Maximum +Moment in Top Slab

Tandem	1	0.475	10.58	8.42

Coincident Bottom Slab Load: 0.30 k/ft

Maximum -Moment in Top Slab

Tandem	1	0.475	10.58	7.82

Coincident Bottom Slab Load: 0.30 k/ft

Maximum +Shear in Top Slab

Tandem 1 0.475 10.58 5.29
Coincident Bottom Slab Load: 0.30 k/ft

Maximum -Shear in Top Slab
Tandem 1 0.475 10.58 11.54
Coincident Bottom Slab Load: 0.30 k/ft

Unfactored Moments and Shears due to Live Loads: (k, k-ft) (Fill Depth = 5.00 ft)

	Truck				Tandem				Lane			
M-PT	Mll+	Mll-	Vll+	Vll-	Mll+	Mll-	Vll+	Vll-	Mll+	Mll-	Vll+	Vll-
Member 1: (Exterior Wall)												
Bottom												
1- 0	0.00	-4.35	0.21	-0.20	0.00	-4.41	0.11	-0.22	0.00	0.00	0.00	0.00
1- 1	0.00	-4.20	0.21	-0.20	0.00	-4.47	0.11	-0.22	0.00	0.00	0.00	0.00
1- 2	0.00	-4.04	0.21	-0.20	0.00	-4.54	0.11	-0.22	0.00	0.00	0.00	0.00
1- 3	0.00	-3.88	0.21	-0.20	0.00	-4.63	0.11	-0.22	0.00	0.00	0.00	0.00
1- 4	0.00	-3.73	0.21	-0.20	0.00	-4.78	0.11	-0.22	0.00	0.00	0.00	0.00
1- 5	0.00	-3.57	0.21	-0.20	0.00	-4.96	0.11	-0.22	0.00	0.00	0.00	0.00
1- 6	0.00	-3.54	0.21	-0.20	0.00	-5.14	0.11	-0.22	0.00	0.00	0.00	0.00
1- 7	0.00	-3.71	0.21	-0.20	0.00	-5.33	0.11	-0.22	0.00	0.00	0.00	0.00
1- 8	0.00	-3.88	0.21	-0.20	0.00	-5.52	0.11	-0.22	0.00	0.00	0.00	0.00
1- 9	0.00	-4.05	0.21	-0.20	0.00	-5.72	0.11	-0.22	0.00	0.00	0.00	0.00
1-10	0.04	-4.23	0.21	-0.20	0.04	-5.91	0.11	-0.22	0.00	0.00	0.00	0.00
Top												
Member 2: (Top Slab)												
Left												
2- 0	0.04	-4.23	2.73	0.00	0.04	-5.91	3.48	0.00	0.00	0.00	0.00	0.00
2- 1	1.32	-1.67	2.32	-0.04	1.28	-2.02	2.96	-0.04	0.00	0.00	0.00	0.00
2- 2	3.70	0.00	1.97	-0.15	3.98	0.00	2.44	-0.14	0.00	0.00	0.00	0.00
2- 3	5.37	0.00	1.62	-0.34	6.55	0.00	1.91	-0.33	0.00	0.00	0.00	0.00
2- 4	6.34	0.00	1.28	-0.62	8.10	0.00	1.40	-0.60	0.00	0.00	0.00	0.00
2- 5	6.70	0.00	0.94	-0.94	8.62	0.00	0.96	-0.96	0.00	0.00	0.00	0.00
2- 6	6.34	0.00	0.62	-1.28	8.10	0.00	0.60	-1.40	0.00	0.00	0.00	0.00
2- 7	5.37	0.00	0.34	-1.62	6.55	0.00	0.33	-1.91	0.00	0.00	0.00	0.00
2- 8	3.70	0.00	0.15	-1.97	3.98	0.00	0.14	-2.44	0.00	0.00	0.00	0.00
2- 9	1.32	-1.67	0.04	-2.32	1.28	-2.02	0.04	-2.96	0.00	0.00	0.00	0.00
2-10	0.04	-4.23	0.00	-2.73	0.04	-5.91	0.00	-3.48	0.00	0.00	0.00	0.00
Right												
Member 4: (Bottom Slab)												
Left												
4- 0	0.00	-4.35	2.32	0.00	0.00	-4.41	2.55	0.00	0.00	0.00	0.00	0.00
4- 1	0.14	-0.83	1.86	0.00	0.00	-0.61	2.04	0.00	0.00	0.00	0.00	0.00
4- 2	2.17	0.00	1.40	0.00	2.92	0.00	1.54	0.00	0.00	0.00	0.00	0.00
4- 3	4.07	0.00	0.94	0.00	5.01	0.00	1.04	0.00	0.00	0.00	0.00	0.00
4- 4	5.19	0.00	0.48	0.00	6.26	0.00	0.54	0.00	0.00	0.00	0.00	0.00
4- 5	5.53	0.00	0.04	-0.04	6.68	0.00	0.04	-0.04	0.00	0.00	0.00	0.00
4- 6	5.19	0.00	0.00	-0.48	6.26	0.00	0.00	-0.54	0.00	0.00	0.00	0.00
4- 7	4.07	0.00	0.00	-0.94	5.01	0.00	0.00	-1.04	0.00	0.00	0.00	0.00
4- 8	2.17	0.00	0.00	-1.40	2.92	0.00	0.00	-1.54	0.00	0.00	0.00	0.00
4- 9	0.14	-0.83	0.00	-1.86	0.00	-0.61	0.00	-2.04	0.00	0.00	0.00	0.00
4-10	0.00	-4.35	0.00	-2.32	0.00	-4.41	0.00	-2.55	0.00	0.00	0.00	0.00
Right												

Serviceability Check: Crack Control (Fill Depth = 5.00 ft)

Bar Mark	Location	Fss (ksi)	Spacing (in)	Allow (in)
A1	Top Corner Bar	14.73	6.00	21.61
A2	Bot Corner Bar	14.66	6.00	21.73
A100	Top Slab (int)	30.12	6.00	9.79
A300	Top Slab (ext)	0.00	12.00	2.10
A200	Bot Slab (int)	29.43	6.00	10.11
A400	Bot Slab (ext)	0.00	12.00	2.19
B1	Ext Wall (int)	18.22	8.00	18.27
B2	Ext Wall (ext)	26.29	6.00	9.07

Strength Limit State at Critical Sections: Flexure (Fill Depth = 5.00 ft)

Member 1: (Exterior Wall)
Thickness = 10.00 in

Loc	Dist. (in)	Design Moment (k-ft)	Corr. A. F. (k)	Mu (k-ft)	Ma (k-ft)	phi	As (in2)	1.2Mcr (k-ft)	Load Ratings IR (Str I)	OR (Str II)
BOT	15.00	-26.34	16.20	31.00	31.97	0.90	0.88	16.55	1.71	2.22
MID	54.00	0.00	6.93	18.40	18.38	0.90	0.47	16.55	NC	NC
MID-	54.00	-22.78	16.20	31.27	32.20	0.90	0.88	16.55	2.05	2.66
TOP	15.00	-26.29	16.20	31.27	32.20	0.90	0.88	16.55	1.60	2.08

Member 2: (Top Slab)
Thickness = 12.00 in

Loc	Dist. (in)	Design Moment (k-ft)	Corr. A. F. (k)	Mu (k-ft)	Ma (k-ft)	phi	As (in2)	1.2Mcr (k-ft)	Load Ratings IR (Str I)	OR (Str II)
LT	14.00	-16.01	5.30	40.07	37.67	0.90	0.88	23.83	4.13	5.35
MID	101.00	39.03	1.67	56.14	51.00	0.90	1.20	23.83	1.79	2.32
RT	14.00	-16.01	5.30	40.07	37.67	0.90	0.88	23.83	4.13	5.35

Member 4: (Bottom Slab)
Thickness = 12.00 in

Loc	Dist. (in)	Design Moment (k-ft)	Corr. A. F. (k)	Mu (k-ft)	Ma (k-ft)	phi	As (in2)	1.2Mcr (k-ft)	Load Ratings IR (Str I)	OR (Str II)
LT	14.00	-16.13	7.48	40.07	38.33	0.90	0.88	23.83	5.76	7.47
MID	101.00	37.78	3.39	56.14	51.49	0.90	1.20	23.83	2.17	2.82
RT	14.00	-16.13	7.48	40.07	38.33	0.90	0.88	23.83	5.76	7.47

Note: Mu - Resisting moment under pure flexure, Ma - Allowable moment under applied axial load

Strength Limit State at Critical Sections: Vertical Shear (Fill Depth = 5.00 ft)

Member 1: (Exterior Wall)
Thickness = 10.00 in (Controlling Shear Method: Simplfied)

Loc	Dist. (in)	Design Shear (k)	Dv (in)	phi*Vn (k)	Vc (k)	Vs (k)	Av (in2)	Max. Spac (in)	Load Ratings IR (Str I)	OR (Str II)
BOT	22.20	4.35	7.20	10.99	12.21	0.00	0.00	0.00	5.94	7.69
MID	54.00	0.57	7.91	12.08	13.42	0.00	0.00	0.00	NC	NC
MID-	54.00	0.57	7.20	10.99	12.21	0.00	0.00	0.00	27.93	36.21
TOP	22.20	-3.48	7.20	10.99	12.21	0.00	0.00	0.00	6.52	8.45

Member 2: (Top Slab)
Thickness = 12.00 in (Controlling Shear Method: Box Culvert)

Loc	Dist. (in)	Design Shear (k)	Dv (in)	phi*Vn (k)	Vc (k)	Vs (k)	Av (in2)	Max. Spac (in)	Load Ratings IR (Str I)	OR (Str II)
LT	22.64	12.92	9.63	22.04	24.48	0.00	0.00	0.00	2.80	3.63
MID	101.00	1.68	10.06	23.04	25.60	0.00	0.00	0.00	13.71	17.77
RT	22.64	12.92	9.63	22.04	24.48	0.00	0.00	0.00	2.80	3.63

Member 4: (Bottom Slab)
Thickness = 12.00 in (Controlling Shear Method: Box Culvert)

Loc	Dist. (in)	Design Shear (k)	Dv (in)	phi*Vn (k)	Vc (k)	Vs (k)	Av (in2)	Max. Spac (in)	Load Ratings IR (Str I)	OR (Str II)
LT	22.64	12.41	9.63	22.04	24.48	0.00	0.00	0.00	3.77	4.89
MID	101.00	0.07	10.06	23.04	25.60	0.00	0.00	0.00	99.99	99.99
RT	22.64	12.41	9.63	22.04	24.48	0.00	0.00	0.00	3.77	4.89

Load Combination Results at Tenth Points: (k, k-ft)(Fill Depth = 5.00 ft)

M-PT	+Moment	-Moment	+Axial	-Axial	+Shear	-Shear
Member 1: (Exterior Wall)						
Bottom						
1- 0	-18.653	-32.574	6.930	16.202	7.484	3.388
1- 1	-13.063	-27.195	6.930	16.202	5.918	2.564
1- 2	-8.845	-25.000	6.930	16.202	4.433	1.794
1- 3	-5.928	-23.532	6.930	16.202	3.028	1.079
1- 4	-4.239	-22.781	6.930	16.202	1.704	0.417
1- 5	-3.705	-22.639	6.930	16.202	0.565	-0.295
1- 6	-4.253	-23.038	6.930	16.202	0.011	-1.457
1- 7	-5.811	-23.921	6.930	16.202	-0.490	-2.538
1- 8	-8.305	-25.235	6.930	16.202	-0.936	-3.539
1- 9	-11.664	-26.956	6.930	16.202	-1.329	-4.459
1-10	-15.814	-31.344	6.930	16.202	-1.667	-5.298
Top						
Member 2: (Top Slab)						
Left						
2- 0	-15.814	-31.344	5.024	5.298	16.202	6.930
2- 1	-0.982	-9.221	1.667	5.298	13.275	5.544
2- 2	15.594	2.852	1.667	5.024	10.333	4.158
2- 3	28.605	8.685	1.667	5.024	7.393	2.772
2- 4	36.419	12.185	1.667	5.024	4.478	0.936
2- 5	39.030	13.351	1.667	5.024	1.680	-1.680
2- 6	36.419	12.185	1.667	5.024	-0.936	-4.478
2- 7	28.605	8.685	1.667	5.024	-2.772	-7.393
2- 8	15.594	2.852	1.667	5.024	-4.158	-10.333
2- 9	-0.982	-9.221	1.667	5.298	-5.544	-13.275
2-10	-15.814	-31.344	5.024	5.298	-6.930	-16.202
Right						
Member 4: (Bottom Slab)						
Left						
4- 0	-18.653	-32.574	7.001	7.484	15.975	7.943
4- 1	-4.700	-8.848	3.388	7.484	12.792	6.354
4- 2	13.752	2.740	3.388	7.001	9.609	4.766
4- 3	27.104	9.425	3.388	7.001	6.426	3.177
4- 4	35.112	13.436	3.388	7.001	3.242	1.589
4- 5	37.781	14.773	3.388	7.001	0.068	-0.068
4- 6	35.112	13.436	3.388	7.001	-1.589	-3.242
4- 7	27.104	9.425	3.388	7.001	-3.177	-6.426
4- 8	13.752	2.740	3.388	7.001	-4.766	-9.609
4- 9	-4.700	-8.848	3.388	7.484	-6.354	-12.792
4-10	-18.653	-32.574	7.001	7.484	-7.943	-15.975
Right						

ANALYSIS RESULTS (Fill Depth = 6.00 ft)
==========

Load Parameters:

Fe = 1.07

Unfactored Moments due to All Loads: (k-ft) (Fill Depth = 6.00 ft)

M-PT	Mdc	Mev	Mdw	Meh	Mls	Mwa	Mll+	Mll-
Member 1: (Exterior Wall)								
Bottom								
1- 0	-4.52	-12.73	-0.50	-2.86	-0.74	0.00	0.00	-3.82
1- 1	-4.23	-12.73	-0.50	0.35	0.03	0.00	0.00	-3.89
1- 2	-3.94	-12.73	-0.50	2.71	0.62	0.00	0.00	-3.96
1- 3	-3.65	-12.73	-0.50	4.27	1.05	0.00	0.00	-4.04
1- 4	-3.37	-12.73	-0.50	5.08	1.30	0.00	0.00	-4.16
1- 5	-3.08	-12.73	-0.50	5.20	1.39	0.00	0.00	-4.29
1- 6	-2.79	-12.73	-0.50	4.69	1.30	0.00	0.00	-4.43
1- 7	-2.50	-12.73	-0.50	3.59	1.05	0.00	0.00	-4.58
1- 8	-2.21	-12.73	-0.50	1.95	0.62	0.00	0.00	-4.72
1- 9	-1.92	-12.73	-0.50	-0.15	0.03	0.00	0.00	-4.86
1-10	-1.63	-12.73	-0.50	-2.68	-0.74	0.00	0.03	-5.00
Top								
Member 2: (Top Slab)								
Left								
2- 0	-1.63	-12.73	-0.50	-2.68	-0.74	0.00	0.03	-5.00
2- 1	0.28	-1.29	-0.05	-2.68	-0.74	0.00	1.03	-1.60
2- 2	1.77	7.61	0.30	-2.68	-0.74	0.00	3.19	0.00
2- 3	2.83	13.96	0.54	-2.68	-0.74	0.00	5.42	0.00
2- 4	3.47	17.78	0.69	-2.68	-0.74	0.00	6.78	0.00
2- 5	3.68	19.05	0.74	-2.68	-0.74	0.00	7.23	0.00
2- 6	3.47	17.78	0.69	-2.68	-0.74	0.00	6.78	0.00
2- 7	2.83	13.96	0.54	-2.68	-0.74	0.00	5.42	0.00
2- 8	1.77	7.61	0.30	-2.68	-0.74	0.00	3.19	0.00
2- 9	0.28	-1.29	-0.05	-2.68	-0.74	0.00	1.03	-1.60
2-10	-1.63	-12.73	-0.50	-2.68	-0.74	0.00	0.03	-5.00
Right								
Member 4: (Bottom Slab)								
Left								
4- 0	-4.52	-12.73	-0.50	-2.86	-0.74	0.00	0.00	-3.82
4- 1	-0.91	-1.29	-0.05	-2.86	-0.74	0.00	0.09	-0.63
4- 2	1.91	7.61	0.30	-2.86	-0.74	0.00	2.53	0.00
4- 3	3.92	13.96	0.54	-2.86	-0.74	0.00	4.40	0.00
4- 4	5.12	17.78	0.69	-2.86	-0.74	0.00	5.51	0.00
4- 5	5.52	19.05	0.74	-2.86	-0.74	0.00	5.88	0.00
4- 6	5.12	17.78	0.69	-2.86	-0.74	0.00	5.51	0.00
4- 7	3.92	13.96	0.54	-2.86	-0.74	0.00	4.40	0.00
4- 8	1.91	7.61	0.30	-2.86	-0.74	0.00	2.53	0.00
4- 9	-0.91	-1.29	-0.05	-2.86	-0.74	0.00	0.09	-0.63
4-10	-4.52	-12.73	-0.50	-2.86	-0.74	0.00	0.00	-3.82
Right								

Unfactored Shears due to All Loads: (k-ft) (Fill Depth = 6.00 ft)

M-PT	Vdc	Vev	Vdw	Veh	Vls	Vwa	Vll+	Vll-
Member 1: (Exterior Wall)								
Bottom								
1- 0	0.32	0.00	0.00	4.06	0.94	0.00	0.14	-0.17
1- 1	0.32	0.00	0.00	3.08	0.76	0.00	0.14	-0.17
1- 2	0.32	0.00	0.00	2.17	0.57	0.00	0.14	-0.17
1- 3	0.32	0.00	0.00	1.31	0.38	0.00	0.14	-0.17
1- 4	0.32	0.00	0.00	0.51	0.19	0.00	0.14	-0.17
1- 5	0.32	0.00	0.00	-0.23	0.00	0.00	0.14	-0.17
1- 6	0.32	0.00	0.00	-0.91	-0.19	0.00	0.14	-0.17
1- 7	0.32	0.00	0.00	-1.53	-0.38	0.00	0.14	-0.17
1- 8	0.32	0.00	0.00	-2.09	-0.57	0.00	0.14	-0.17
1- 9	0.32	0.00	0.00	-2.59	-0.76	0.00	0.14	-0.17
1-10	0.32	0.00	0.00	-3.03	-0.95	0.00	0.14	-0.17
Top								
Member 2: (Top Slab)								
Left								
2- 0	1.26	7.55	0.29	0.00	0.00	0.00	2.93	0.00

2- 1	1.01	6.04	0.24	0.00	0.00	0.00	2.47	-0.03
2- 2	0.76	4.53	0.18	0.00	0.00	0.00	2.00	-0.12
2- 3	0.51	3.02	0.12	0.00	0.00	0.00	1.55	-0.27
2- 4	0.25	1.51	0.06	0.00	0.00	0.00	1.12	-0.48
2- 5	0.00	0.00	0.00	0.00	0.00	0.00	0.77	-0.77
2- 6	-0.25	-1.51	-0.06	0.00	0.00	0.00	0.48	-1.12
2- 7	-0.51	-3.02	-0.12	0.00	0.00	0.00	0.27	-1.55
2- 8	-0.76	-4.53	-0.18	0.00	0.00	0.00	0.12	-2.00
2- 9	-1.01	-6.04	-0.24	0.00	0.00	0.00	0.03	-2.47
2-10	-1.26	-7.55	-0.29	0.00	0.00	0.00	0.00	-2.93

Right

Member 4: (Bottom Slab)
Left

4- 0	2.39	7.55	0.29	0.00	0.00	0.00	2.25	0.00
4- 1	1.91	6.04	0.24	0.00	0.00	0.00	1.81	0.00
4- 2	1.43	4.53	0.18	0.00	0.00	0.00	1.36	0.00
4- 3	0.96	3.02	0.12	0.00	0.00	0.00	0.91	0.00
4- 4	0.48	1.51	0.06	0.00	0.00	0.00	0.47	0.00
4- 5	0.00	0.00	0.00	0.00	0.00	0.00	0.03	-0.03
4- 6	-0.48	-1.51	-0.06	0.00	0.00	0.00	0.00	-0.47
4- 7	-0.96	-3.02	-0.12	0.00	0.00	0.00	0.00	-0.91
4- 8	-1.43	-4.53	-0.18	0.00	0.00	0.00	0.00	-1.36
4- 9	-1.91	-6.04	-0.24	0.00	0.00	0.00	0.00	-1.81
4-10	-2.39	-7.55	-0.29	0.00	0.00	0.00	0.00	-2.25

Right

Live Load Parameters: Traffic Direction is Parallel to Main Reinforcement
---

Vehicle	Axle No.	Weight (k/ft)	Length (ft)	Dist. From Previous (ft)	
Truck	1	0.369	7.73	0.00	(largest truck used)
	2	0.369	7.73	14.00	
	3	0.092	7.73	14.00	
Tandem	1	0.380	11.73	0.00	(largest truck used)

All Vehicles:
Distribution Width: 14.57 ft
Impact Factor : 1.08
Lane:
Lane Load : 0.000 k/ft Distribution Width: 0.00 ft

Truck Positions That Cause Maximum Results:

Maximum +Moment in Top Slab

Vehicle	Axle No.	Weight (k/ft)	Length (ft)	Dist. From Left End (ft)
Truck	1	0.092	7.73	22.42
	2	0.369	7.73	8.42
	3	0.369	7.73	-5.58

Coincident Bottom Slab Load: 0.17 k/ft

Maximum -Moment in Top Slab

Truck	1	0.092	7.73	22.92
	2	0.369	7.73	8.92
	3	0.369	7.73	-5.08

Coincident Bottom Slab Load: 0.17 k/ft

Maximum +Shear in Top Slab

Truck	1	0.092	7.73	31.87
	2	0.369	7.73	17.87
	3	0.369	7.73	3.87

Coincident Bottom Slab Load: 0.23 k/ft

Maximum -Shear in Top Slab

Truck	1	0.092	7.73	26.97
	2	0.369	7.73	12.97
	3	0.369	7.73	-1.03

Coincident Bottom Slab Load: 0.23 k/ft

Maximum +Moment in Top Slab

Tandem	1	0.380	11.73	8.39

Coincident Bottom Slab Load: 0.26 k/ft

Maximum -Moment in Top Slab

Tandem	1	0.380	11.73	9.23

Coincident Bottom Slab Load: 0.26 k/ft

Maximum +Shear in Top Slab

Tandem 1 0.380 11.73 5.87
Coincident Bottom Slab Load: 0.26 k/ft

Maximum -Shear in Top Slab
Tandem 1 0.380 11.73 10.97
Coincident Bottom Slab Load: 0.26 k/ft

Unfactored Moments and Shears due to Live Loads: (k, k-ft) (Fill Depth = 6.00 ft)

	Truck				Tandem				Lane			
M-PT	Mll+	Mll-	Vll+	Vll-	Mll+	Mll-	Vll+	Vll-	Mll+	Mll-	Vll+	Vll-
Member 1: (Exterior Wall)												
Bottom												
1- 0	0.00	-3.62	0.14	-0.16	0.00	-3.82	0.09	-0.17	0.00	0.00	0.00	0.00
1- 1	0.00	-3.53	0.14	-0.16	0.00	-3.89	0.09	-0.17	0.00	0.00	0.00	0.00
1- 2	0.00	-3.44	0.14	-0.16	0.00	-3.96	0.09	-0.17	0.00	0.00	0.00	0.00
1- 3	0.00	-3.35	0.14	-0.16	0.00	-4.04	0.09	-0.17	0.00	0.00	0.00	0.00
1- 4	0.00	-3.25	0.14	-0.16	0.00	-4.16	0.09	-0.17	0.00	0.00	0.00	0.00
1- 5	0.00	-3.16	0.14	-0.16	0.00	-4.29	0.09	-0.17	0.00	0.00	0.00	0.00
1- 6	0.00	-3.13	0.14	-0.16	0.00	-4.43	0.09	-0.17	0.00	0.00	0.00	0.00
1- 7	0.00	-3.23	0.14	-0.16	0.00	-4.58	0.09	-0.17	0.00	0.00	0.00	0.00
1- 8	0.00	-3.37	0.14	-0.16	0.00	-4.72	0.09	-0.17	0.00	0.00	0.00	0.00
1- 9	0.00	-3.51	0.14	-0.16	0.00	-4.86	0.09	-0.17	0.00	0.00	0.00	0.00
1-10	0.03	-3.65	0.14	-0.16	0.03	-5.00	0.09	-0.17	0.00	0.00	0.00	0.00
Top												
Member 2: (Top Slab)												
Left												
2- 0	0.03	-3.65	2.31	0.00	0.03	-5.00	2.93	0.00	0.00	0.00	0.00	0.00
2- 1	1.00	-1.40	1.95	-0.03	1.03	-1.60	2.47	-0.03	0.00	0.00	0.00	0.00
2- 2	2.99	0.00	1.64	-0.11	3.19	0.00	2.00	-0.12	0.00	0.00	0.00	0.00
2- 3	4.49	0.00	1.34	-0.26	5.42	0.00	1.55	-0.27	0.00	0.00	0.00	0.00
2- 4	5.32	0.00	1.04	-0.47	6.78	0.00	1.12	-0.48	0.00	0.00	0.00	0.00
2- 5	5.63	0.00	0.74	-0.74	7.23	0.00	0.77	-0.77	0.00	0.00	0.00	0.00
2- 6	5.32	0.00	0.47	-1.04	6.78	0.00	0.48	-1.12	0.00	0.00	0.00	0.00
2- 7	4.49	0.00	0.26	-1.34	5.42	0.00	0.27	-1.55	0.00	0.00	0.00	0.00
2- 8	2.99	0.00	0.11	-1.64	3.19	0.00	0.12	-2.00	0.00	0.00	0.00	0.00
2- 9	1.00	-1.40	0.03	-1.95	1.03	-1.60	0.03	-2.47	0.00	0.00	0.00	0.00
2-10	0.03	-3.65	0.00	-2.31	0.03	-5.00	0.00	-2.93	0.00	0.00	0.00	0.00
Right												
Member 4: (Bottom Slab)												
Left												
4- 0	0.00	-3.62	1.97	0.00	0.00	-3.82	2.25	0.00	0.00	0.00	0.00	0.00
4- 1	0.09	-0.63	1.58	0.00	0.00	-0.49	1.81	0.00	0.00	0.00	0.00	0.00
4- 2	1.91	0.00	1.19	0.00	2.53	0.00	1.36	0.00	0.00	0.00	0.00	0.00
4- 3	3.52	0.00	0.80	0.00	4.40	0.00	0.91	0.00	0.00	0.00	0.00	0.00
4- 4	4.47	0.00	0.41	0.00	5.51	0.00	0.47	0.00	0.00	0.00	0.00	0.00
4- 5	4.76	0.00	0.03	-0.03	5.88	0.00	0.03	-0.03	0.00	0.00	0.00	0.00
4- 6	4.47	0.00	0.00	-0.41	5.51	0.00	0.00	-0.47	0.00	0.00	0.00	0.00
4- 7	3.52	0.00	0.00	-0.80	4.40	0.00	0.00	-0.91	0.00	0.00	0.00	0.00
4- 8	1.91	0.00	0.00	-1.19	2.53	0.00	0.00	-1.36	0.00	0.00	0.00	0.00
4- 9	0.09	-0.63	0.00	-1.58	0.00	-0.49	0.00	-1.81	0.00	0.00	0.00	0.00
4-10	0.00	-3.62	0.00	-1.97	0.00	-3.82	0.00	-2.25	0.00	0.00	0.00	0.00
Right												

Serviceability Check: Crack Control (Fill Depth = 6.00 ft)

Bar Mark	Location	Fss (ksi)	Spacing (in)	Allow (in)
A1	Top Corner Bar	15.37	6.00	20.51
A2	Bot Corner Bar	15.71	6.00	19.95
A100	Top Slab (int)	32.05	6.00	8.97
A300	Top Slab (ext)	0.00	12.00	1.83
A200	Bot Slab (int)	32.02	6.00	8.98
A400	Bot Slab (ext)	0.00	12.00	1.74
B1	Ext Wall (int)	22.73	8.00	13.93
B2	Ext Wall (ext)	28.55	6.00	7.97

Strength Limit State at Critical Sections: Flexure (Fill Depth = 6.00 ft)

Member 1: (Exterior Wall)
Thickness = 10.00 in

Loc	Dist. (in)	Design Moment (k-ft)	Corr. A. F. (k)	Mu (k-ft)	Ma (k-ft)	phi	As (in2)	1.2Mcr (k-ft)	Load Ratings IR (Str I)	OR (Str II)
BOT	15.00	-28.16	16.96	31.00	32.16	0.90	0.88	16.55	1.58	2.05
MID	54.00	0.00	8.12	18.40	18.69	0.90	0.47	16.55	NC	NC
MID-	54.00	-24.20	16.96	31.27	32.39	0.90	0.88	16.55	2.06	2.67
TOP	15.00	-27.65	16.96	31.27	32.39	0.90	0.88	16.55	1.57	2.03

Member 2: (Top Slab)
Thickness = 12.00 in

Loc	Dist. (in)	Design Moment (k-ft)	Corr. A. F. (k)	Mu (k-ft)	Ma (k-ft)	phi	As (in2)	1.2Mcr (k-ft)	Load Ratings IR (Str I)	OR (Str II)
LT	14.00	-16.43	5.63	40.07	37.77	0.90	0.88	23.83	4.61	5.97
MID	101.00	40.72	2.07	56.14	51.11	0.90	1.20	23.83	1.82	2.36
RT	14.00	-16.43	5.63	40.07	37.77	0.90	0.88	23.83	4.61	5.97

Member 4: (Bottom Slab)
Thickness = 12.00 in

Loc	Dist. (in)	Design Moment (k-ft)	Corr. A. F. (k)	Mu (k-ft)	Ma (k-ft)	phi	As (in2)	1.2Mcr (k-ft)	Load Ratings IR (Str I)	OR (Str II)
LT	14.00	-17.01	7.79	40.07	38.43	0.90	0.88	23.83	6.21	8.05
MID	101.00	40.51	3.77	56.14	51.59	0.90	1.20	23.83	2.08	2.69
RT	14.00	-17.01	7.79	40.07	38.43	0.90	0.88	23.83	6.21	8.05

Note: Mu - Resisting moment under pure flexure, Ma - Allowable moment under applied axial load

Strength Limit State at Critical Sections: Vertical Shear (Fill Depth = 6.00 ft)

Member 1: (Exterior Wall)
Thickness = 10.00 in (Controlling Shear Method: Simplfied)

Loc	Dist. (in)	Design Shear (k)	Dv (in)	phi*Vn (k)	Vc (k)	Vs (k)	Av (in2)	Max. Spac (in)	Load Ratings IR (Str I)	OR (Str II)
BOT	22.20	4.49	7.20	10.99	12.21	0.00	0.00	0.00	6.30	8.17
MID	54.00	0.45	7.91	12.08	13.42	0.00	0.00	0.00	NC	NC
MID-	54.00	0.45	7.20	10.99	12.21	0.00	0.00	0.00	37.05	48.03
TOP	22.20	-3.64	7.20	10.99	12.21	0.00	0.00	0.00	6.81	8.83

Member 2: (Top Slab)
Thickness = 12.00 in (Controlling Shear Method: Box Culvert)

Loc	Dist. (in)	Design Shear (k)	Dv (in)	phi*Vn (k)	Vc (k)	Vs (k)	Av (in2)	Max. Spac (in)	Load Ratings IR (Str I)	OR (Str II)
LT	22.64	13.40	9.63	22.04	24.48	0.00	0.00	0.00	3.05	3.95
MID	101.00	1.34	10.06	23.04	25.60	0.00	0.00	0.00	17.13	22.21
RT	22.64	13.40	9.63	22.04	24.48	0.00	0.00	0.00	3.05	3.95

Member 4: (Bottom Slab)
Thickness = 12.00 in (Controlling Shear Method: Box Culvert)

Loc	Dist. (in)	Design Shear (k)	Dv (in)	phi*Vn (k)	Vc (k)	Vs (k)	Av (in2)	Max. Spac (in)	Load Ratings IR (Str I)	OR (Str II)
LT	22.64	13.34	9.63	22.04	24.48	0.00	0.00	0.00	3.84	4.97
MID	101.00	0.05	10.06	23.04	25.60	0.00	0.00	0.00	99.99	99.99
RT	22.64	13.34	9.63	22.04	24.48	0.00	0.00	0.00	3.84	4.97

Load Combination Results at Tenth Points: (k, k-ft)(Fill Depth = 6.00 ft)

M-PT	+Moment	-Moment	+Axial	-Axial	+Shear	-Shear
Member 1: (Exterior Wall)						
Bottom						
1- 0	-20.995	-34.779	8.123	16.957	7.792	3.766
1- 1	-15.060	-29.072	8.123	16.957	6.141	2.886
1- 2	-10.575	-26.710	8.123	16.957	4.570	2.060
1- 3	-7.467	-25.086	8.123	16.957	3.081	1.287
1- 4	-5.663	-24.194	8.123	16.957	1.672	0.568
1- 5	-5.091	-23.963	8.123	16.957	0.448	-0.200
1- 6	-5.677	-24.313	8.123	16.957	-0.163	-1.447
1- 7	-7.350	-25.190	8.123	16.957	-0.720	-2.614
1- 8	-10.035	-26.544	8.123	16.957	-1.223	-3.699
1- 9	-13.662	-28.348	8.123	16.957	-1.673	-4.704
1-10	-18.156	-32.989	8.123	16.957	-2.068	-5.628
Top						
Member 2: (Top Slab)						
Left						
2- 0	-18.156	-32.989	5.449	5.628	16.957	8.123
2- 1	-2.012	-9.102	2.068	5.628	13.787	6.498
2- 2	15.718	3.721	2.068	5.449	10.609	4.874
2- 3	29.592	10.558	2.068	5.449	7.439	3.249
2- 4	37.934	14.660	2.068	5.449	4.332	1.522
2- 5	40.716	16.028	2.068	5.449	1.345	-1.345
2- 6	37.934	14.660	2.068	5.449	-1.522	-4.332
2- 7	29.592	10.558	2.068	5.449	-3.249	-7.439
2- 8	15.718	3.721	2.068	5.449	-4.874	-10.609
2- 9	-2.012	-9.102	2.068	5.628	-6.498	-13.787
2-10	-18.156	-32.989	5.449	5.628	-8.123	-16.957
Right						
Member 4: (Bottom Slab)						
Left						
4- 0	-20.995	-34.779	7.427	7.792	17.181	9.135
4- 1	-5.295	-9.137	3.766	7.792	13.753	7.308
4- 2	14.586	3.609	3.766	7.427	10.324	5.481
4- 3	28.989	11.298	3.766	7.427	6.896	3.654
4- 4	37.622	15.912	3.766	7.427	3.467	1.827
4- 5	40.507	17.450	3.766	7.427	0.055	-0.055
4- 6	37.622	15.912	3.766	7.427	-1.827	-3.467
4- 7	28.989	11.298	3.766	7.427	-3.654	-6.896
4- 8	14.586	3.609	3.766	7.427	-5.481	-10.324
4- 9	-5.295	-9.137	3.766	7.792	-7.308	-13.753
4-10	-20.995	-34.779	7.427	7.792	-9.135	-17.181
Right						

ANALYSIS RESULTS (Fill Depth = 7.00 ft)
==========

Load Parameters:

Fe = 1.08

Unfactored Moments due to All Loads: (k-ft) (Fill Depth = 7.00 ft)

M-PT	Mdc	Mev	Mdw	Meh	Mls	Mwa	Mll+	Mll-
Member 1: (Exterior Wall)								
Bottom								
1- 0	-4.52	-15.00	-0.50	-3.10	-0.74	0.00	0.00	-3.41
1- 1	-4.23	-15.00	-0.50	0.36	0.03	0.00	0.00	-3.47
1- 2	-3.94	-15.00	-0.50	2.92	0.62	0.00	0.00	-3.54
1- 3	-3.65	-15.00	-0.50	4.62	1.05	0.00	0.00	-3.61
1- 4	-3.37	-15.00	-0.50	5.52	1.30	0.00	0.00	-3.70
1- 5	-3.08	-15.00	-0.50	5.67	1.39	0.00	0.00	-3.80
1- 6	-2.79	-15.00	-0.50	5.12	1.30	0.00	0.00	-3.90
1- 7	-2.50	-15.00	-0.50	3.93	1.05	0.00	0.00	-4.01
1- 8	-2.21	-15.00	-0.50	2.16	0.62	0.00	0.00	-4.11
1- 9	-1.92	-15.00	-0.50	-0.14	0.03	0.00	0.00	-4.22
1-10	-1.63	-15.00	-0.50	-2.93	-0.74	0.00	0.03	-4.33
Top								
Member 2: (Top Slab)								
Left								
2- 0	-1.63	-15.00	-0.50	-2.93	-0.74	0.00	0.03	-4.33
2- 1	0.28	-1.52	-0.05	-2.93	-0.74	0.00	0.85	-1.30
2- 2	1.77	8.97	0.30	-2.93	-0.74	0.00	2.64	0.00
2- 3	2.83	16.46	0.54	-2.93	-0.74	0.00	4.62	0.00
2- 4	3.47	20.96	0.69	-2.93	-0.74	0.00	5.80	0.00
2- 5	3.68	22.46	0.74	-2.93	-0.74	0.00	6.20	0.00
2- 6	3.47	20.96	0.69	-2.93	-0.74	0.00	5.80	0.00
2- 7	2.83	16.46	0.54	-2.93	-0.74	0.00	4.62	0.00
2- 8	1.77	8.97	0.30	-2.93	-0.74	0.00	2.64	0.00
2- 9	0.28	-1.52	-0.05	-2.93	-0.74	0.00	0.85	-1.30
2-10	-1.63	-15.00	-0.50	-2.93	-0.74	0.00	0.03	-4.33
Right								
Member 4: (Bottom Slab)								
Left								
4- 0	-4.52	-15.00	-0.50	-3.10	-0.74	0.00	0.00	-3.41
4- 1	-0.91	-1.52	-0.05	-3.10	-0.74	0.00	0.05	-0.50
4- 2	1.91	8.97	0.30	-3.10	-0.74	0.00	2.25	0.00
4- 3	3.92	16.46	0.54	-3.10	-0.74	0.00	3.94	0.00
4- 4	5.12	20.96	0.69	-3.10	-0.74	0.00	4.96	0.00
4- 5	5.52	22.46	0.74	-3.10	-0.74	0.00	5.30	0.00
4- 6	5.12	20.96	0.69	-3.10	-0.74	0.00	4.96	0.00
4- 7	3.92	16.46	0.54	-3.10	-0.74	0.00	3.94	0.00
4- 8	1.91	8.97	0.30	-3.10	-0.74	0.00	2.25	0.00
4- 9	-0.91	-1.52	-0.05	-3.10	-0.74	0.00	0.05	-0.50
4-10	-4.52	-15.00	-0.50	-3.10	-0.74	0.00	0.00	-3.41
Right								

Unfactored Shears due to All Loads: (k-ft) (Fill Depth = 7.00 ft)

M-PT	Vdc	Vev	Vdw	Veh	Vls	Vwa	Vll+	Vll-
Member 1: (Exterior Wall)								
Bottom								
1- 0	0.32	0.00	0.00	4.38	0.94	0.00	0.10	-0.14
1- 1	0.32	0.00	0.00	3.34	0.76	0.00	0.10	-0.14
1- 2	0.32	0.00	0.00	2.35	0.57	0.00	0.10	-0.14
1- 3	0.32	0.00	0.00	1.43	0.38	0.00	0.10	-0.14
1- 4	0.32	0.00	0.00	0.57	0.19	0.00	0.10	-0.14
1- 5	0.32	0.00	0.00	-0.23	0.00	0.00	0.10	-0.14
1- 6	0.32	0.00	0.00	-0.97	-0.19	0.00	0.10	-0.14
1- 7	0.32	0.00	0.00	-1.65	-0.38	0.00	0.10	-0.14
1- 8	0.32	0.00	0.00	-2.28	-0.57	0.00	0.10	-0.14
1- 9	0.32	0.00	0.00	-2.84	-0.76	0.00	0.10	-0.14
1-10	0.32	0.00	0.00	-3.34	-0.95	0.00	0.10	-0.14
Top								
Member 2: (Top Slab)								
Left								
2- 0	1.26	8.90	0.29	0.00	0.00	0.00	2.51	0.00

2- 1	1.01	7.12	0.24	0.00	0.00	0.00	2.10	-0.02
2- 2	0.76	5.34	0.18	0.00	0.00	0.00	1.68	-0.10
2- 3	0.51	3.56	0.12	0.00	0.00	0.00	1.28	-0.22
2- 4	0.25	1.78	0.06	0.00	0.00	0.00	0.93	-0.40
2- 5	0.00	0.00	0.00	0.00	0.00	0.00	0.64	-0.64
2- 6	-0.25	-1.78	-0.06	0.00	0.00	0.00	0.40	-0.93
2- 7	-0.51	-3.56	-0.12	0.00	0.00	0.00	0.22	-1.28
2- 8	-0.76	-5.34	-0.18	0.00	0.00	0.00	0.10	-1.68
2- 9	-1.01	-7.12	-0.24	0.00	0.00	0.00	0.02	-2.10
2-10	-1.26	-8.90	-0.29	0.00	0.00	0.00	0.00	-2.51

Right

Member 4: (Bottom Slab)
Left

4- 0	2.39	8.90	0.29	0.00	0.00	0.00	2.04	0.00
4- 1	1.91	7.12	0.24	0.00	0.00	0.00	1.63	0.00
4- 2	1.43	5.34	0.18	0.00	0.00	0.00	1.23	0.00
4- 3	0.96	3.56	0.12	0.00	0.00	0.00	0.82	0.00
4- 4	0.48	1.78	0.06	0.00	0.00	0.00	0.42	0.00
4- 5	0.00	0.00	0.00	0.00	0.00	0.00	0.03	-0.03
4- 6	-0.48	-1.78	-0.06	0.00	0.00	0.00	0.00	-0.42
4- 7	-0.96	-3.56	-0.12	0.00	0.00	0.00	0.00	-0.82
4- 8	-1.43	-5.34	-0.18	0.00	0.00	0.00	0.00	-1.23
4- 9	-1.91	-7.12	-0.24	0.00	0.00	0.00	0.00	-1.63
4-10	-2.39	-8.90	-0.29	0.00	0.00	0.00	0.00	-2.04

Right

Live Load Parameters: Traffic Direction is Parallel to Main Reinforcement
---

Vehicle	Axle No.	Weight (k/ft)	Length (ft)	Dist. From Previous (ft)	
Truck	1	0.292	8.88	0.00	(largest truck used)
	2	0.292	8.88	14.00	
	3	0.073	8.88	14.00	
Tandem	1	0.314	12.88	0.00	(largest truck used)

All Vehicles:
Distribution Width: 25.72 ft
Impact Factor : 1.04
Lane:
Lane Load : 0.000 k/ft Distribution Width: 0.00 ft

Truck Positions That Cause Maximum Results:

Maximum +Moment in Top Slab

Vehicle	Axle No.	Weight (k/ft)	Length (ft)	Dist. From Left End (ft)
Truck	1	0.073	8.88	22.42
	2	0.292	8.88	8.42
	3	0.292	8.88	-5.58

Coincident Bottom Slab Load: 0.15 k/ft

Maximum -Moment in Top Slab

Truck	1	0.073	8.88	21.81
	2	0.292	8.88	7.81
	3	0.292	8.88	-6.19

Coincident Bottom Slab Load: 0.15 k/ft

Maximum +Shear in Top Slab

Truck	1	0.073	8.88	32.44
	2	0.292	8.88	18.44
	3	0.292	8.88	4.44

Coincident Bottom Slab Load: 0.20 k/ft

Maximum -Shear in Top Slab

Truck	1	0.073	8.88	26.39
	2	0.292	8.88	12.39
	3	0.292	8.88	-1.61

Coincident Bottom Slab Load: 0.20 k/ft

Maximum +Moment in Top Slab

Tandem	1	0.314	12.88	8.42

Coincident Bottom Slab Load: 0.24 k/ft

Maximum -Moment in Top Slab

Tandem	1	0.314	12.88	8.13

Coincident Bottom Slab Load: 0.24 k/ft

Maximum +Shear in Top Slab

Tandem 1 0.314 12.88 6.44
Coincident Bottom Slab Load: 0.24 k/ft

Maximum -Shear in Top Slab
Tandem 1 0.314 12.88 10.39
Coincident Bottom Slab Load: 0.24 k/ft

Unfactored Moments and Shears due to Live Loads: (k, k-ft) (Fill Depth = 7.00 ft)

	Truck				Tandem				Lane			
M-PT	Mll+	Mll-	Vll+	Vll-	Mll+	Mll-	Vll+	Vll-	Mll+	Mll-	Vll+	Vll-
Member 1: (Exterior Wall)												
Bottom												
1- 0	0.00	-3.11	0.10	-0.14	0.00	-3.41	0.07	-0.12	0.00	0.00	0.00	0.00
1- 1	0.00	-3.06	0.10	-0.14	0.00	-3.47	0.07	-0.12	0.00	0.00	0.00	0.00
1- 2	0.00	-3.01	0.10	-0.14	0.00	-3.54	0.07	-0.12	0.00	0.00	0.00	0.00
1- 3	0.00	-2.96	0.10	-0.14	0.00	-3.61	0.07	-0.12	0.00	0.00	0.00	0.00
1- 4	0.00	-2.91	0.10	-0.14	0.00	-3.70	0.07	-0.12	0.00	0.00	0.00	0.00
1- 5	0.00	-2.86	0.10	-0.14	0.00	-3.80	0.07	-0.12	0.00	0.00	0.00	0.00
1- 6	0.00	-2.83	0.10	-0.14	0.00	-3.90	0.07	-0.12	0.00	0.00	0.00	0.00
1- 7	0.00	-2.87	0.10	-0.14	0.00	-4.01	0.07	-0.12	0.00	0.00	0.00	0.00
1- 8	0.00	-2.98	0.10	-0.14	0.00	-4.11	0.07	-0.12	0.00	0.00	0.00	0.00
1- 9	0.00	-3.10	0.10	-0.14	0.00	-4.22	0.07	-0.12	0.00	0.00	0.00	0.00
1-10	0.02	-3.22	0.10	-0.14	0.03	-4.33	0.07	-0.12	0.00	0.00	0.00	0.00
Top												
Member 2: (Top Slab)												
Left												
2- 0	0.02	-3.22	1.99	0.00	0.03	-4.33	2.51	0.00	0.00	0.00	0.00	0.00
2- 1	0.79	-1.19	1.68	-0.02	0.85	-1.30	2.10	-0.02	0.00	0.00	0.00	0.00
2- 2	2.46	0.00	1.39	-0.09	2.64	0.00	1.68	-0.10	0.00	0.00	0.00	0.00
2- 3	3.83	0.00	1.12	-0.20	4.62	0.00	1.28	-0.22	0.00	0.00	0.00	0.00
2- 4	4.58	0.00	0.85	-0.37	5.80	0.00	0.93	-0.40	0.00	0.00	0.00	0.00
2- 5	4.83	0.00	0.59	-0.59	6.20	0.00	0.64	-0.64	0.00	0.00	0.00	0.00
2- 6	4.58	0.00	0.37	-0.85	5.80	0.00	0.40	-0.93	0.00	0.00	0.00	0.00
2- 7	3.83	0.00	0.20	-1.12	4.62	0.00	0.22	-1.28	0.00	0.00	0.00	0.00
2- 8	2.46	0.00	0.09	-1.39	2.64	0.00	0.10	-1.68	0.00	0.00	0.00	0.00
2- 9	0.79	-1.19	0.02	-1.68	0.85	-1.30	0.02	-2.10	0.00	0.00	0.00	0.00
2-10	0.02	-3.22	0.00	-1.99	0.03	-4.33	0.00	-2.51	0.00	0.00	0.00	0.00
Right												
Member 4: (Bottom Slab)												
Left												
4- 0	0.00	-3.11	1.73	0.00	0.00	-3.41	2.04	0.00	0.00	0.00	0.00	0.00
4- 1	0.05	-0.50	1.38	0.00	0.00	-0.40	1.63	0.00	0.00	0.00	0.00	0.00
4- 2	1.72	0.00	1.04	0.00	2.25	0.00	1.23	0.00	0.00	0.00	0.00	0.00
4- 3	3.13	0.00	0.70	0.00	3.94	0.00	0.82	0.00	0.00	0.00	0.00	0.00
4- 4	3.96	0.00	0.36	0.00	4.96	0.00	0.42	0.00	0.00	0.00	0.00	0.00
4- 5	4.22	0.00	0.02	-0.02	5.30	0.00	0.03	-0.03	0.00	0.00	0.00	0.00
4- 6	3.96	0.00	0.00	-0.36	4.96	0.00	0.00	-0.42	0.00	0.00	0.00	0.00
4- 7	3.13	0.00	0.00	-0.70	3.94	0.00	0.00	-0.82	0.00	0.00	0.00	0.00
4- 8	1.72	0.00	0.00	-1.04	2.25	0.00	0.00	-1.23	0.00	0.00	0.00	0.00
4- 9	0.05	-0.50	0.00	-1.38	0.00	-0.40	0.00	-1.63	0.00	0.00	0.00	0.00
4-10	0.00	-3.11	0.00	-1.73	0.00	-3.41	0.00	-2.04	0.00	0.00	0.00	0.00
Right												

Serviceability Check: Crack Control (Fill Depth = 7.00 ft)

Bar Mark	Location	Fss (ksi)	Spacing (in)	Allow (in)
A1	Top Corner Bar	16.28	6.00	19.10
A2	Bot Corner Bar	16.93	6.00	18.18
A100	Top Slab (int)	34.46	6.00	8.07
A300	Top Slab (ext)	0.00	12.00	1.47
A200	Bot Slab (int)	34.93	6.00	7.91
A400	Bot Slab (ext)	0.00	12.00	1.29
B1	Ext Wall (int)	27.36	8.00	10.95
B2	Ext Wall (ext)	31.14	6.00	6.92

Strength Limit State at Critical Sections: Flexure (Fill Depth = 7.00 ft)

Member 1: (Exterior Wall)
Thickness = 10.00 in

Loc	Dist. (in)	Design Moment (k-ft)	Corr. A. F. (k)	Mu (k-ft)	Ma (k-ft)	phi	As (in2)	1.2Mcr (k-ft)	Load Ratings IR (Str I)	OR (Str II)
BOT	15.00	-30.31	17.99	31.00	32.41	0.90	0.88	16.55	1.35	1.74
MID	54.00	0.00	9.34	18.40	19.01	0.90	0.47	16.55	NC	NC
MID-	54.00	-25.96	17.99	31.27	32.65	0.90	0.88	16.55	1.98	2.57
TOP	15.00	-29.44	17.99	31.27	32.65	0.90	0.88	16.55	1.44	1.87

Member 2: (Top Slab)
Thickness = 12.00 in

Loc	Dist. (in)	Design Moment (k-ft)	Corr. A. F. (k)	Mu (k-ft)	Ma (k-ft)	phi	As (in2)	1.2Mcr (k-ft)	Load Ratings IR (Str I)	OR (Str II)
LT	14.00	-17.16	6.00	40.07	37.88	0.90	0.88	23.83	4.99	6.47
MID	101.00	43.13	2.43	56.14	51.22	0.90	1.20	23.83	1.75	2.26
RT	14.00	-17.16	6.00	40.07	37.88	0.90	0.88	23.83	4.99	6.47

Member 4: (Bottom Slab)
Thickness = 12.00 in

Loc	Dist. (in)	Design Moment (k-ft)	Corr. A. F. (k)	Mu (k-ft)	Ma (k-ft)	phi	As (in2)	1.2Mcr (k-ft)	Load Ratings IR (Str I)	OR (Str II)
LT	14.00	-18.07	8.14	40.07	38.53	0.90	0.88	23.83	6.49	8.41
MID	101.00	43.69	4.10	56.14	51.69	0.90	1.20	23.83	1.86	2.41
RT	14.00	-18.07	8.14	40.07	38.53	0.90	0.88	23.83	6.49	8.41

Note: Mu - Resisting moment under pure flexure, Ma - Allowable moment under applied axial load

Strength Limit State at Critical Sections: Vertical Shear (Fill Depth = 7.00 ft)

Member 1: (Exterior Wall)
Thickness = 10.00 in (Controlling Shear Method: Simplfied)

Loc	Dist. (in)	Design Shear (k)	Dv (in)	phi*Vn (k)	Vc (k)	Vs (k)	Av (in2)	Max. Spac (in)	Load Ratings IR (Str I)	OR (Str II)
BOT	22.20	4.66	7.20	10.99	12.21	0.00	0.00	0.00	6.52	8.46
MID	54.00	0.37	7.91	12.08	13.42	0.00	0.00	0.00	NC	NC
MID-	54.00	0.37	7.20	10.99	12.21	0.00	0.00	0.00	45.38	58.83
TOP	22.20	-3.84	7.20	10.99	12.21	0.00	0.00	0.00	6.90	8.95

Member 2: (Top Slab)
Thickness = 12.00 in (Controlling Shear Method: Box Culvert)

Loc	Dist. (in)	Design Shear (k)	Dv (in)	phi*Vn (k)	Vc (k)	Vs (k)	Av (in2)	Max. Spac (in)	Load Ratings IR (Str I)	OR (Str II)
LT	22.64	14.13	9.63	22.04	24.48	0.00	0.00	0.00	3.21	4.16
MID	101.00	1.11	10.06	23.04	25.60	0.00	0.00	0.00	20.71	26.85
RT	22.64	14.13	9.63	22.04	24.48	0.00	0.00	0.00	3.21	4.16

Member 4: (Bottom Slab)
Thickness = 12.00 in (Controlling Shear Method: Box Culvert)

Loc	Dist. (in)	Design Shear (k)	Dv (in)	phi*Vn (k)	Vc (k)	Vs (k)	Av (in2)	Max. Spac (in)	Load Ratings IR (Str I)	OR (Str II)
LT	22.64	14.41	9.63	22.04	24.48	0.00	0.00	0.00	3.75	4.86
MID	101.00	0.05	10.06	23.04	25.60	0.00	0.00	0.00	99.99	99.99
RT	22.64	14.41	9.63	22.04	24.48	0.00	0.00	0.00	3.75	4.86

Load Combination Results at Tenth Points: (k, k-ft)(Fill Depth = 7.00 ft)

M-PT	+Moment	-Moment	+Axial	-Axial	+Shear	-Shear
Member 1: (Exterior Wall)						
Bottom						
1- 0	-23.378	-37.347	9.340	17.989	8.137	4.103
1- 1	-17.099	-31.292	9.340	17.989	6.401	3.166
1- 2	-12.346	-28.746	9.340	17.989	4.745	2.283
1- 3	-9.046	-26.974	9.340	17.989	3.171	1.454
1- 4	-7.127	-25.961	9.340	17.989	1.677	0.679
1- 5	-6.517	-25.640	9.340	17.989	0.367	-0.147
1- 6	-7.141	-25.950	9.340	17.989	-0.300	-1.479
1- 7	-8.929	-26.841	9.340	17.989	-0.914	-2.730
1- 8	-11.806	-28.261	9.340	17.989	-1.474	-3.901
1- 9	-15.700	-30.181	9.340	17.989	-1.980	-4.991
1-10	-20.539	-35.109	9.340	17.989	-2.432	-6.000
Top						
Member 2: (Top Slab)						
Left						
2- 0	-20.539	-35.109	5.874	6.000	17.989	9.340
2- 1	-2.844	-9.215	2.432	6.000	14.543	7.472
2- 2	16.302	4.615	2.432	5.874	11.095	5.604
2- 3	31.206	12.476	2.432	5.874	7.674	3.736
2- 4	40.148	17.192	2.432	5.874	4.344	1.868
2- 5	43.130	18.765	2.432	5.874	1.112	-1.112
2- 6	40.148	17.192	2.432	5.874	-1.868	-4.344
2- 7	31.206	12.476	2.432	5.874	-3.736	-7.674
2- 8	16.302	4.615	2.432	5.874	-5.604	-11.095
2- 9	-2.844	-9.215	2.432	6.000	-7.472	-14.543
2-10	-20.539	-35.109	5.874	6.000	-9.340	-17.989
Right						
Member 4: (Bottom Slab)						
Left						
4- 0	-23.378	-37.347	7.852	8.137	18.564	10.352
4- 1	-5.885	-9.533	4.103	8.137	14.856	8.282
4- 2	15.632	4.503	4.103	7.852	11.148	6.211
4- 3	31.222	13.216	4.103	7.852	7.439	4.141
4- 4	40.575	18.444	4.103	7.852	3.731	2.070
4- 5	43.692	20.187	4.103	7.852	0.045	-0.045
4- 6	40.575	18.444	4.103	7.852	-2.070	-3.731
4- 7	31.222	13.216	4.103	7.852	-4.141	-7.439
4- 8	15.632	4.503	4.103	7.852	-6.211	-11.148
4- 9	-5.885	-9.533	4.103	8.137	-8.282	-14.856
4-10	-23.378	-37.347	7.852	8.137	-10.352	-18.564
Right						

ANALYSIS RESULTS (Fill Depth = 7.50 ft)
==========

Load Parameters:

Fe = 1.08

Unfactored Moments due to All Loads: (k-ft) (Fill Depth = 7.50 ft)

M-PT	Mdc	Mev	Mdw	Meh	Mls	Mwa	Mll+	Mll-
Member 1: (Exterior Wall)								
Bottom								
1- 0	-4.52	-16.16	-0.50	-3.23	-0.74	0.00	0.00	-3.24
1- 1	-4.23	-16.16	-0.50	0.37	0.03	0.00	0.00	-3.31
1- 2	-3.94	-16.16	-0.50	3.02	0.62	0.00	0.00	-3.37
1- 3	-3.65	-16.16	-0.50	4.79	1.05	0.00	0.00	-3.43
1- 4	-3.37	-16.16	-0.50	5.73	1.30	0.00	0.00	-3.50
1- 5	-3.08	-16.16	-0.50	5.90	1.39	0.00	0.00	-3.59
1- 6	-2.79	-16.16	-0.50	5.34	1.30	0.00	0.00	-3.67
1- 7	-2.50	-16.16	-0.50	4.11	1.05	0.00	0.00	-3.76
1- 8	-2.21	-16.16	-0.50	2.27	0.62	0.00	0.00	-3.85
1- 9	-1.92	-16.16	-0.50	-0.14	0.03	0.00	0.00	-3.94
1-10	-1.63	-16.16	-0.50	-3.05	-0.74	0.00	0.02	-4.03
Top								
Member 2: (Top Slab)								
Left								
2- 0	-1.63	-16.16	-0.50	-3.05	-0.74	0.00	0.02	-4.03
2- 1	0.28	-1.63	-0.05	-3.05	-0.74	0.00	0.78	-1.19
2- 2	1.77	9.66	0.30	-3.05	-0.74	0.00	2.42	0.00
2- 3	2.83	17.73	0.54	-3.05	-0.74	0.00	4.28	0.00
2- 4	3.47	22.57	0.69	-3.05	-0.74	0.00	5.40	0.00
2- 5	3.68	24.19	0.74	-3.05	-0.74	0.00	5.78	0.00
2- 6	3.47	22.57	0.69	-3.05	-0.74	0.00	5.40	0.00
2- 7	2.83	17.73	0.54	-3.05	-0.74	0.00	4.28	0.00
2- 8	1.77	9.66	0.30	-3.05	-0.74	0.00	2.42	0.00
2- 9	0.28	-1.63	-0.05	-3.05	-0.74	0.00	0.78	-1.19
2-10	-1.63	-16.16	-0.50	-3.05	-0.74	0.00	0.02	-4.03
Right								
Member 4: (Bottom Slab)								
Left								
4- 0	-4.52	-16.16	-0.50	-3.23	-0.74	0.00	0.00	-3.24
4- 1	-0.91	-1.63	-0.05	-3.23	-0.74	0.00	0.03	-0.45
4- 2	1.91	9.66	0.30	-3.23	-0.74	0.00	2.13	0.00
4- 3	3.92	17.73	0.54	-3.23	-0.74	0.00	3.75	0.00
4- 4	5.12	22.57	0.69	-3.23	-0.74	0.00	4.73	0.00
4- 5	5.52	24.19	0.74	-3.23	-0.74	0.00	5.05	0.00
4- 6	5.12	22.57	0.69	-3.23	-0.74	0.00	4.73	0.00
4- 7	3.92	17.73	0.54	-3.23	-0.74	0.00	3.75	0.00
4- 8	1.91	9.66	0.30	-3.23	-0.74	0.00	2.13	0.00
4- 9	-0.91	-1.63	-0.05	-3.23	-0.74	0.00	0.03	-0.45
4-10	-4.52	-16.16	-0.50	-3.23	-0.74	0.00	0.00	-3.24
Right								

Unfactored Shears due to All Loads: (k-ft) (Fill Depth = 7.50 ft)

M-PT	Vdc	Vev	Vdw	Veh	Vls	Vwa	Vll+	Vll-
Member 1: (Exterior Wall)								
Bottom								
1- 0	0.32	0.00	0.00	4.53	0.94	0.00	0.08	-0.12
1- 1	0.32	0.00	0.00	3.46	0.76	0.00	0.08	-0.12
1- 2	0.32	0.00	0.00	2.45	0.57	0.00	0.08	-0.12
1- 3	0.32	0.00	0.00	1.50	0.38	0.00	0.08	-0.12
1- 4	0.32	0.00	0.00	0.60	0.19	0.00	0.08	-0.12
1- 5	0.32	0.00	0.00	-0.23	0.00	0.00	0.08	-0.12
1- 6	0.32	0.00	0.00	-1.00	-0.19	0.00	0.08	-0.12
1- 7	0.32	0.00	0.00	-1.72	-0.38	0.00	0.08	-0.12
1- 8	0.32	0.00	0.00	-2.37	-0.57	0.00	0.08	-0.12
1- 9	0.32	0.00	0.00	-2.96	-0.76	0.00	0.08	-0.12
1-10	0.32	0.00	0.00	-3.50	-0.95	0.00	0.08	-0.12
Top								
Member 2: (Top Slab)								
Left								
2- 0	1.26	9.59	0.29	0.00	0.00	0.00	2.34	0.00

2- 1	1.01	7.67	0.24	0.00	0.00	0.00	1.94	-0.02
2- 2	0.76	5.75	0.18	0.00	0.00	0.00	1.54	-0.09
2- 3	0.51	3.84	0.12	0.00	0.00	0.00	1.17	-0.20
2- 4	0.25	1.92	0.06	0.00	0.00	0.00	0.85	-0.37
2- 5	0.00	0.00	0.00	0.00	0.00	0.00	0.58	-0.58
2- 6	-0.25	-1.92	-0.06	0.00	0.00	0.00	0.37	-0.85
2- 7	-0.51	-3.84	-0.12	0.00	0.00	0.00	0.20	-1.17
2- 8	-0.76	-5.75	-0.18	0.00	0.00	0.00	0.09	-1.54
2- 9	-1.01	-7.67	-0.24	0.00	0.00	0.00	0.02	-1.94
2-10	-1.26	-9.59	-0.29	0.00	0.00	0.00	0.00	-2.34

Right

Member 4: (Bottom Slab)
Left

4- 0	2.39	9.59	0.29	0.00	0.00	0.00	1.95	0.00
4- 1	1.91	7.67	0.24	0.00	0.00	0.00	1.56	0.00
4- 2	1.43	5.75	0.18	0.00	0.00	0.00	1.17	0.00
4- 3	0.96	3.84	0.12	0.00	0.00	0.00	0.79	0.00
4- 4	0.48	1.92	0.06	0.00	0.00	0.00	0.40	0.00
4- 5	0.00	0.00	0.00	0.00	0.00	0.00	0.02	-0.02
4- 6	-0.48	-1.92	-0.06	0.00	0.00	0.00	0.00	-0.40
4- 7	-0.96	-3.84	-0.12	0.00	0.00	0.00	0.00	-0.79
4- 8	-1.43	-5.75	-0.18	0.00	0.00	0.00	0.00	-1.17
4- 9	-1.91	-7.67	-0.24	0.00	0.00	0.00	0.00	-1.56
4-10	-2.39	-9.59	-0.29	0.00	0.00	0.00	0.00	-1.95

Right

Live Load Parameters: Traffic Direction is Parallel to Main Reinforcement
---

Vehicle	Axle No.	Weight (k/ft)	Length (ft)	Dist. From Previous (ft)	
Truck	1	0.263	9.46	0.00	(largest truck used)
	2	0.263	9.46	14.00	
	3	0.066	9.46	14.00	
Tandem	1	0.288	13.46	0.00	(largest truck used)

All Vehicles:
Distribution Width: 26.29 ft
Impact Factor : 1.02
Lane:
Lane Load : 0.000 k/ft Distribution Width: 0.00 ft

Truck Positions That Cause Maximum Results:

Maximum +Moment in Top Slab

Vehicle	Axle No.	Weight (k/ft)	Length (ft)	Dist. From Left End (ft)
Truck	1	0.066	9.46	22.42
	2	0.263	9.46	8.42
	3	0.263	9.46	-5.58

Coincident Bottom Slab Load: 0.15 k/ft

Maximum -Moment in Top Slab

Truck	1	0.066	9.46	22.94
	2	0.263	9.46	8.94
	3	0.263	9.46	-5.06

Coincident Bottom Slab Load: 0.15 k/ft

Maximum +Shear in Top Slab

Truck	1	0.066	9.46	32.73
	2	0.263	9.46	18.73
	3	0.263	9.46	4.73

Coincident Bottom Slab Load: 0.19 k/ft

Maximum -Shear in Top Slab

Truck	1	0.066	9.46	26.10
	2	0.263	9.46	12.10
	3	0.263	9.46	-1.90

Coincident Bottom Slab Load: 0.19 k/ft

Maximum +Moment in Top Slab

Tandem	1	0.288	13.46	8.41

Coincident Bottom Slab Load: 0.23 k/ft

Maximum -Moment in Top Slab

Tandem	1	0.288	13.46	8.41

Coincident Bottom Slab Load: 0.23 k/ft

Maximum +Shear in Top Slab

Tandem 1 0.288 13.46 6.73
Coincident Bottom Slab Load: 0.23 k/ft

Maximum -Shear in Top Slab
Tandem 1 0.288 13.46 10.10
Coincident Bottom Slab Load: 0.23 k/ft

Unfactored Moments and Shears due to Live Loads: (k, k-ft) (Fill Depth = 7.50 ft)

	Truck				Tandem				Lane			
M-PT	Mll+	Mll-	Vll+	Vll-	Mll+	Mll-	Vll+	Vll-	Mll+	Mll-	Vll+	Vll-
Member 1: (Exterior Wall)												
Bottom												
1- 0	0.00	-2.91	0.08	-0.12	0.00	-3.24	0.07	-0.10	0.00	0.00	0.00	0.00
1- 1	0.00	-2.87	0.08	-0.12	0.00	-3.31	0.07	-0.10	0.00	0.00	0.00	0.00
1- 2	0.00	-2.83	0.08	-0.12	0.00	-3.37	0.07	-0.10	0.00	0.00	0.00	0.00
1- 3	0.00	-2.80	0.08	-0.12	0.00	-3.43	0.07	-0.10	0.00	0.00	0.00	0.00
1- 4	0.00	-2.76	0.08	-0.12	0.00	-3.50	0.07	-0.10	0.00	0.00	0.00	0.00
1- 5	0.00	-2.73	0.08	-0.12	0.00	-3.59	0.07	-0.10	0.00	0.00	0.00	0.00
1- 6	0.00	-2.70	0.08	-0.12	0.00	-3.67	0.07	-0.10	0.00	0.00	0.00	0.00
1- 7	0.00	-2.74	0.08	-0.12	0.00	-3.76	0.07	-0.10	0.00	0.00	0.00	0.00
1- 8	0.00	-2.82	0.08	-0.12	0.00	-3.85	0.07	-0.10	0.00	0.00	0.00	0.00
1- 9	0.00	-2.92	0.08	-0.12	0.00	-3.94	0.07	-0.10	0.00	0.00	0.00	0.00
1-10	0.02	-3.03	0.08	-0.12	0.02	-4.03	0.07	-0.10	0.00	0.00	0.00	0.00
Top												
Member 2: (Top Slab)												
Left												
2- 0	0.02	-3.03	1.86	0.00	0.02	-4.03	2.34	0.00	0.00	0.00	0.00	0.00
2- 1	0.71	-1.09	1.56	-0.02	0.78	-1.19	1.94	-0.02	0.00	0.00	0.00	0.00
2- 2	2.24	0.00	1.29	-0.08	2.42	0.00	1.54	-0.09	0.00	0.00	0.00	0.00
2- 3	3.56	0.00	1.03	-0.18	4.28	0.00	1.17	-0.20	0.00	0.00	0.00	0.00
2- 4	4.28	0.00	0.77	-0.33	5.40	0.00	0.85	-0.37	0.00	0.00	0.00	0.00
2- 5	4.50	0.00	0.53	-0.53	5.78	0.00	0.58	-0.58	0.00	0.00	0.00	0.00
2- 6	4.28	0.00	0.33	-0.77	5.40	0.00	0.37	-0.85	0.00	0.00	0.00	0.00
2- 7	3.56	0.00	0.18	-1.03	4.28	0.00	0.20	-1.17	0.00	0.00	0.00	0.00
2- 8	2.24	0.00	0.08	-1.29	2.42	0.00	0.09	-1.54	0.00	0.00	0.00	0.00
2- 9	0.71	-1.09	0.02	-1.56	0.78	-1.19	0.02	-1.94	0.00	0.00	0.00	0.00
2-10	0.02	-3.03	0.00	-1.86	0.02	-4.03	0.00	-2.34	0.00	0.00	0.00	0.00
Right												
Member 4: (Bottom Slab)												
Left												
4- 0	0.00	-2.91	1.63	0.00	0.00	-3.24	1.95	0.00	0.00	0.00	0.00	0.00
4- 1	0.03	-0.45	1.31	0.00	0.00	-0.37	1.56	0.00	0.00	0.00	0.00	0.00
4- 2	1.64	0.00	0.98	0.00	2.13	0.00	1.17	0.00	0.00	0.00	0.00	0.00
4- 3	2.97	0.00	0.66	0.00	3.75	0.00	0.79	0.00	0.00	0.00	0.00	0.00
4- 4	3.76	0.00	0.34	0.00	4.73	0.00	0.40	0.00	0.00	0.00	0.00	0.00
4- 5	4.01	0.00	0.02	-0.02	5.05	0.00	0.02	-0.02	0.00	0.00	0.00	0.00
4- 6	3.76	0.00	0.00	-0.34	4.73	0.00	0.00	-0.40	0.00	0.00	0.00	0.00
4- 7	2.97	0.00	0.00	-0.66	3.75	0.00	0.00	-0.79	0.00	0.00	0.00	0.00
4- 8	1.64	0.00	0.00	-0.98	2.13	0.00	0.00	-1.17	0.00	0.00	0.00	0.00
4- 9	0.03	-0.45	0.00	-1.31	0.00	-0.37	0.00	-1.56	0.00	0.00	0.00	0.00
4-10	0.00	-2.91	0.00	-1.63	0.00	-3.24	0.00	-1.95	0.00	0.00	0.00	0.00
Right												

Serviceability Check: Crack Control (Fill Depth = 7.50 ft)

Bar Mark	Location	Fss (ksi)	Spacing (in)	Allow (in)
A1	Top Corner Bar	16.80	6.00	18.35
A2	Bot Corner Bar	17.58	6.00	17.33
A100	Top Slab (int)	35.80	6.00	7.63
A300	Top Slab (ext)	0.00	12.00	1.29
A200	Bot Slab (int)	36.47	6.00	7.41
A400	Bot Slab (ext)	0.00	12.00	1.07
B1	Ext Wall (int)	29.72	8.00	9.79
B2	Ext Wall (ext)	32.51	6.00	6.42

Strength Limit State at Critical Sections: Flexure (Fill Depth = 7.50 ft)

Member 1: (Exterior Wall)
Thickness = 10.00 in

Loc	Dist. (in)	Design Moment (k-ft)	Corr. A. F. (k)	Mu (k-ft)	Ma (k-ft)	phi	As (in2)	1.2Mcr (k-ft)	Load Ratings IR (Str I)	OR (Str II)
BOT	15.00	-31.47	18.58	31.00	32.56	0.90	0.88	16.55	1.19	1.54
MID	54.00	0.00	9.96	18.40	19.17	0.90	0.47	16.55	NC	NC
MID-	54.00	-26.93	18.58	31.27	32.80	0.90	0.88	16.55	1.91	2.48
TOP	15.00	-30.41	18.58	31.27	32.80	0.90	0.88	16.55	1.35	1.75

Member 2: (Top Slab)
Thickness = 12.00 in

Loc	Dist. (in)	Design Moment (k-ft)	Corr. A. F. (k)	Mu (k-ft)	Ma (k-ft)	phi	As (in2)	1.2Mcr (k-ft)	Load Ratings IR (Str I)	OR (Str II)
LT	14.00	-17.60	6.19	40.07	37.94	0.90	0.88	23.83	5.15	6.67
MID	101.00	44.53	2.61	56.14	51.27	0.90	1.20	23.83	1.67	2.16
RT	14.00	-17.60	6.19	40.07	37.94	0.90	0.88	23.83	5.15	6.67

Member 4: (Bottom Slab)
Thickness = 12.00 in

Loc	Dist. (in)	Design Moment (k-ft)	Corr. A. F. (k)	Mu (k-ft)	Ma (k-ft)	phi	As (in2)	1.2Mcr (k-ft)	Load Ratings IR (Str I)	OR (Str II)
LT	14.00	-18.65	8.32	40.07	38.58	0.90	0.88	23.83	6.58	8.52
MID	101.00	45.41	4.27	56.14	51.74	0.90	1.20	23.83	1.72	2.22
RT	14.00	-18.65	8.32	40.07	38.58	0.90	0.88	23.83	6.58	8.52

Note: Mu - Resisting moment under pure flexure, Ma - Allowable moment under applied axial load

Strength Limit State at Critical Sections: Vertical Shear (Fill Depth = 7.50 ft)

Member 1: (Exterior Wall)
Thickness = 10.00 in (Controlling Shear Method: Simplfied)

Loc	Dist. (in)	Design Shear (k)	Dv (in)	phi*Vn (k)	Vc (k)	Vs (k)	Av (in2)	Max. Spac (in)	Load Ratings IR (Str I)	OR (Str II)
BOT	22.20	4.75	7.20	10.99	12.21	0.00	0.00	0.00	6.60	8.55
MID	54.00	0.34	7.91	12.08	13.42	0.00	0.00	0.00	NC	NC
MID-	54.00	0.34	7.20	10.99	12.21	0.00	0.00	0.00	49.92	64.71
TOP	22.20	-3.94	7.20	10.99	12.21	0.00	0.00	0.00	6.92	8.97

Member 2: (Top Slab)
Thickness = 12.00 in (Controlling Shear Method: Box Culvert)

Loc	Dist. (in)	Design Shear (k)	Dv (in)	phi*Vn (k)	Vc (k)	Vs (k)	Av (in2)	Max. Spac (in)	Load Ratings IR (Str I)	OR (Str II)
LT	22.64	14.55	9.63	22.04	24.48	0.00	0.00	0.00	3.26	4.22
MID	101.00	1.02	10.06	23.04	25.60	0.00	0.00	0.00	22.57	29.26
RT	22.64	14.55	9.63	22.04	24.48	0.00	0.00	0.00	3.26	4.22

Member 4: (Bottom Slab)
Thickness = 12.00 in (Controlling Shear Method: Box Culvert)

Loc	Dist. (in)	Design Shear (k)	Dv (in)	phi*Vn (k)	Vc (k)	Vs (k)	Av (in2)	Max. Spac (in)	Load Ratings IR (Str I)	OR (Str II)
LT	22.64	14.98	9.63	22.04	24.48	0.00	0.00	0.00	3.66	4.75
MID	101.00	0.04	10.06	23.04	25.60	0.00	0.00	0.00	99.99	99.99
RT	22.64	14.98	9.63	22.04	24.48	0.00	0.00	0.00	3.66	4.75

Load Combination Results at Tenth Points: (k, k-ft)(Fill Depth = 7.50 ft)

M-PT	+Moment	-Moment	+Axial	-Axial	+Shear	-Shear
Member 1: (Exterior Wall)						
Bottom						
1- 0	-24.585	-38.732	9.957	18.578	8.317	4.267
1- 1	-18.133	-32.498	9.957	18.578	6.539	3.301
1- 2	-13.246	-29.854	9.957	18.578	4.841	2.390
1- 3	-9.851	-28.005	9.957	18.578	3.224	1.532
1- 4	-7.875	-26.932	9.957	18.578	1.687	0.729
1- 5	-7.245	-26.570	9.957	18.578	0.335	-0.125
1- 6	-7.889	-26.858	9.957	18.578	-0.361	-1.500
1- 7	-9.733	-27.749	9.957	18.578	-1.003	-2.794
1- 8	-12.706	-29.202	9.957	18.578	-1.591	-4.007
1- 9	-16.735	-31.181	9.957	18.578	-2.125	-5.139
1-10	-21.746	-36.251	9.957	18.578	-2.606	-6.191
Top						
Member 2: (Top Slab)						
Left						
2- 0	-21.746	-36.251	6.087	6.191	18.578	9.957
2- 1	-3.229	-9.346	2.606	6.191	14.986	7.965
2- 2	16.711	5.071	2.606	6.087	11.393	5.974
2- 3	32.159	13.451	2.606	6.087	7.847	3.983
2- 4	41.437	18.480	2.606	6.087	4.388	1.991
2- 5	44.530	20.156	2.606	6.087	1.021	-1.021
2- 6	41.437	18.480	2.606	6.087	-1.991	-4.388
2- 7	32.159	13.451	2.606	6.087	-3.983	-7.847
2- 8	16.711	5.071	2.606	6.087	-5.974	-11.393
2- 9	-3.229	-9.346	2.606	6.191	-7.965	-14.986
2-10	-21.746	-36.251	6.087	6.191	-9.957	-18.578
Right						
Member 4: (Bottom Slab)						
Left						
4- 0	-24.585	-38.732	8.064	8.317	19.303	10.969
4- 1	-6.180	-9.759	4.267	8.317	15.446	8.775
4- 2	16.209	4.959	4.267	8.064	11.589	6.582
4- 3	32.428	14.192	4.267	8.064	7.731	4.388
4- 4	42.161	19.731	4.267	8.064	3.874	2.194
4- 5	45.408	21.578	4.267	8.064	0.041	-0.041
4- 6	42.161	19.731	4.267	8.064	-2.194	-3.874
4- 7	32.428	14.192	4.267	8.064	-4.388	-7.731
4- 8	16.209	4.959	4.267	8.064	-6.582	-11.589
4- 9	-6.180	-9.759	4.267	8.317	-8.775	-15.446
4-10	-24.585	-38.732	8.064	8.317	-10.969	-19.303
Right						

CALCULATIONS FOR DETACHED HEADWALL (INLET END)

PROJECT CRITERIA:

Concrete:

$f_c := 5000 \frac{lbf}{in^2}$ $E_c := 4074ksi$ $Aggregate_{diam} := .75in$

$\gamma_c := 150 \frac{lbf}{ft^3}$

β_1 = Stress Block Factor specified in Article 5.7.2.2

$$\beta_1 := \max\left[.65, \left[\begin{array}{l} .85 \text{ if } f_c < 4000psi \\ .85 - \frac{.05}{psi} \cdot \left(\frac{f_c - 4000psi}{1000}\right) \text{ otherwise} \end{array}\right]\right]$$

$\beta_1 = 0.8$

Steel:

$f_y := 60000 \frac{lbf}{in^2}$ $E_s := 29000ksi$ $cover := 2in$

$b_w := 12in$

Design Section Width

$t_{wall} := 12in$

$Length := 17ft + 8in$

$foot_{width} := 3ft$

$t_{foot} := 1ft$

$heel := foot_{width} - t_{wall}$

$heel = 2\,ft$

$ELV_{top_hw} := 735.67ft$

$ELV_{top_bridge} := 724.14ft + 6ft = 730.14\,ft$

$H_{wall} := ELV_{top_hw} - ELV_{top_bridge}$

$H_{wall} = 5.53\,ft$

$\gamma_{soil} := 140\,\frac{lbf}{ft^3}$

$\phi := 34deg$

$\beta := atan\left(\frac{1}{4}\right) = 14.036 \cdot deg$

$\theta := 90deg$

$\delta := \frac{2}{3} \cdot \phi$

$\delta = 22.667 \cdot deg$

$$k_a := \frac{\sin(\theta + \phi)^2}{\sin(\theta)^2 \cdot \sin(\theta - \delta) \cdot \left(1 + \sqrt{\frac{\sin(\phi + \delta) \cdot \sin(\phi - \beta)}{\sin(\theta - \delta) \cdot \sin(\theta + \beta)}}\right)^2}$$

$k_a = 0.304$

$H_{design} := (foot_{width} - t_{wall}) \cdot \sin(\beta) + H_{wall}$ $\qquad H_{design} = 6.015\,ft$

Determine Anchor Load to Keep Eccentricity in Middle Quarter of Footing:

Driving:

Traffic cannot come within H/2 of wall, therefore LS = 0

$LS := Length \cdot \left(\frac{1}{2}\right) \cdot k_a \cdot \gamma_{soil} \cdot 2ft \cdot H_{design} \cdot \cos(\delta)$ $\qquad LS = 4178\,lbf$

$EH := Length \cdot \left(\frac{1}{2}\right) \cdot k_a \cdot \gamma_{soil} \cdot H_{design}^{2} \cdot \cos(\delta)$ $\qquad EH = 12564 \cdot lbf$

Resisting:

$DC_{wall} := t_{wall} \cdot (H_{wall} - t_{foot}) \cdot Length \cdot \gamma_c$ $\qquad DC_{wall} = 12004\,lbf$

$DC_{foot} := t_{foot} \cdot foot_{width} \cdot Length \cdot \gamma_c$ $\qquad DC_{foot} = 7950\,lbf$

$EV_{heel} := (H_{wall} - t_{foot}) \cdot heel \cdot Length \cdot \gamma_{soil}$ $\qquad EV_{heel} = 22408\,lbf$

$R_{bolt} := 24000lbf$ $\qquad$ Total Bolt Load Required to Maintain Eccentricity

$\Sigma V := DC_{wall} + DC_{foot} + EV_{heel} + R_{bolt}$ $\qquad \Sigma V = 66363\,lbf$

Factored Moments about "A":

$$Driving := 1.5 \cdot EH \cdot \frac{H_{design}}{3} + 1.75 \cdot LS \cdot \frac{H_{design}}{2} \qquad Driving = 59775 \cdot lbf \cdot ft$$

$$Resisting := 0.9 \cdot DC_{wall} \cdot \frac{t_{wall}}{2} + 0.9 \cdot DC_{foot} \cdot \frac{foot_{width}}{2} + 1.00 \cdot EV_{heel} \cdot \left(\frac{heel}{2} + t_{wall}\right) + 0.9 R_{bolt} \cdot \left(foot_{width} - 9in\right) \qquad Resisting = 109551 \cdot lbf \cdot ft$$

$$e := \frac{foot_{width}}{2} - \frac{Resisting - Driving}{\Sigma V} \qquad e = 0.750\,ft$$

$$e_{all} := \frac{foot_{width}}{4} \qquad e_{all} = 0.750\,ft$$

$$No_{bolt} := 6$$

$$Anchor_{capacity} := \frac{R_{bolt}}{No_{bolt}} \qquad Anchor_{capacity} = 4000\,lbf$$

This is the required Ultimate Capacity Required of Each Bolt.

Check SlidingSection per 11.6.3.6 and 10.6.3.4

$\phi_f := 35deg$

$\phi_\tau := 0.9$ Per Table 10.5.5.2.2-1. Conservatively use in place of Table 11.5.6-1.

$R_\tau := \Sigma V \cdot 0.8 \cdot \tan(\phi_f) = 37.174 \cdot kip$ Nominal Sliding Resistance between Soil and Foundation AASHTO eqtn 10.6.3.4-2

$R_R := \phi_\tau \cdot R_\tau = 33457\ lbf$

$\Sigma H := 1.5EH + 1.75LS = 26157\ lbf$ Ignore Anchorage in Sliding.

$$Sliding_{check} := \begin{cases} \text{"OK"} & \text{if } \dfrac{R_R}{\Sigma H} \geq 1 \\ \text{"NG"} & \text{otherwise} \end{cases} = \text{"OK"}$$

Bolt Capacities:

All bolt products are supplied by Meadow Burke (MB)

Product		Working Load
1"ϕ Coil Insert	MB CX-51 x 5 1/2"	6,250lbf
1"ϕ Coil Rod	MB CR-4	15,000lbf
5x5x1/2" Washer Plate	MB CW-4	7,200lbf
1"ϕ Standard Coil Nut	MB CN-5	7,200lbf

Comparing the working load (in lieu of the ultimate load) to allow higher redundancy and to account for possible bolt deterioration.

ALL VALUES LARGER THAN REQUIRED CAPACITY.....OK

Determine Required Bolt Length:

Nut + Washer + Grip + Insert Penetration

1" + 1/2" + 9" + 2 1/2" = 13"

Strength Limit State

Flexural Resistance in Section 5.7.3.2 at Bottom of Wall:

Rebar Layout = #5 @ 12"

$bar_{wall} := 5$ $\qquad$ $s_{wall} := 12in$

$diam_{wall} := \frac{bar_{wall}}{8} in$ $\qquad$ $diam_{wall} = 0.625 \cdot in$

$As_{wall} := \frac{\pi \cdot diam_{wall}^2}{4} \cdot 12 \frac{in}{s_{wall}}$ $\qquad$ $As_{wall} = 0.31 \cdot in^2$

$d_{wall} := t_{wall} - cover - \frac{diam_{wall}}{2}$ $\qquad$ $d_{wall} = 9.687 \cdot in$

$\phi_{moment} := 0.95$ $\qquad$ Per AASHTO Table 12-5.5-1

$\phi_{shear} := 0.90$ $\qquad$ Per AASHTO Table 12-5.5-1

$LS_{wall} := 0$

$EH_{wall} := \left(\frac{1}{2}\right) \cdot k_a \cdot \gamma_{soil} \cdot \left(H_{design} - t_{foot}\right)^2 \cdot \cos(\delta)$ $\qquad$ $EH_{wall} = 494 \cdot \frac{lbf}{ft}$

$Mu_{wall} := 1.5 EH_{wall} \cdot \frac{H_{design} - t_{foot}}{3} + 1.75 \cdot LS_{wall} \cdot \frac{H_{design} - t_{foot}}{2}$ $\qquad$ $Mu_{wall} = 1240 \cdot \frac{lbf \cdot ft}{ft}$

$DC_{wall} := t_{wall} \cdot (H_{wall} - t_{foot}) \cdot \gamma_c$ $\qquad DC_{wall} = 679.5 \cdot \frac{lbf}{ft}$

$Nu_{wall} := 0.9DC_{wall}$ $\qquad Nu_{wall} = 611.55 \cdot \frac{lbf}{ft}$

$Vu_{wall} := 1.5EH_{wall} + 1.75 \cdot LS_{wall}$ $\qquad Vu_{wall} = 742 \cdot \frac{lbf}{ft}$

Verify that f_y can be substituted for f_s in the equations of 5.7.3.2. This is allowed when $\frac{c}{d_s} \le 0.60$.

$c := \frac{As_{wall} \cdot f_y}{0.85 \cdot f_c \cdot \beta_1 \cdot b_w}$ $\qquad c = 0.451 \cdot in$ $\qquad$ Simplified equation 5.7.3.1.2-4

$\frac{c}{d_{wall}} = 0.047$ $\qquad$ **This is less than 0.60 therefore f_y can be substituted for f_s**

$a_{wall} := \beta_1 \cdot c$ $\qquad a_{wall} = 0.361 \cdot in$

$Mn_{wall} := As_{wall} \cdot f_y \cdot \left(d_{wall} - \frac{a_{wall}}{2}\right) \cdot \frac{1}{b_w}$

$Mr_{wall} := \phi_{moment} \cdot Mn_{wall}$ $\qquad \boxed{Mr_{wall} = 13854 \cdot \frac{lbf \cdot ft}{ft}}$

$\frac{Mr_{wall}}{Mu_{wall}} = 11.176$

$Mr_{wall} > Mu_{wall}$ $\qquad$ **OK**

Shear Resistance at Bottom of Wall (Section 5.8.3.4.2)

The section contains less than the minimum transverse reinforcement specified in 5.8.2.5, therefore use equation 5.8.3.4.2-2 to determine the longitudinal strain (ξ_x) at the location of maximum shear.

$Mu := \max(Mu_{wall}, Vu_{wall} \cdot d_{wall})$

In the eqtn below Mu shall not be less than $Vu \cdot d_v$

$$\xi_{s_wall} := \frac{\frac{|Mu|}{d_{wall}} + 0.5Nu_{wall} + |Vu_{wall}|}{E_s \cdot As_{wall}} \cdot 1ft$$

$1000 \cdot \xi_{s_wall} = 0.29$ (5.8.3.4.2-4)

$s_{x_wall} := d_{wall}$

$$s_{xe_wall} := s_{x_wall} \cdot \frac{1.38in}{Aggregate_{diam} + 0.63in} = 9.687 \cdot in$$ (5.8.3.4.2-5)

$$\beta_{wall} := \left(\frac{4.8}{1 + 750 \cdot \xi_{s_wall}}\right) \cdot \left(\frac{51}{39 + \frac{s_{xe_wall}}{1in}}\right) = 4.129$$ (5.8.3.4.2-1)

$$\Theta_{wall} := 29deg + 3500deg \cdot \xi_{s_wall} = 30.016 \cdot deg$$ (5.8.3.4.2-3)

$$Vn_{wall} := \min\left(0.25 \cdot f_c \cdot b_w \cdot d_{wall}, 0.0316 \cdot \beta_{wall} \cdot \sqrt{f_c \cdot ksi} \cdot b_w \cdot d_{wall}\right) = 33.916 \cdot kip$$

$$Vr_{wall} := \phi_{shear} \cdot Vn_{wall} \cdot \frac{1}{ft} = 30.525 \cdot \frac{kip}{ft}$$

$$Vu_{wall} = 0.742 \cdot \frac{kip}{ft}$$

$$\frac{Vr_{wall}}{Vu_{wall}} = 41.163$$

$$WallShear_{check} := \begin{cases} \text{"OK"} & \text{if } \frac{Vr_{wall}}{Vu_{wall}} \geq 1 \\ \text{"NG"} & \text{otherwise} \end{cases} = \text{"OK"}$$

Note: Per 5.8.2.4 Slabs, Footings, and Culverts are exempt

Design/Analysis References:

1. AASHTO LRFD Bridge Design Specifications, 2012.
2. VTrans 2011 Standard Specifications for Road and Bridge Construction.
3. Das, Principles of Foundation Engineering, 5th Edition.
4. Holtz & Kovacs, Introduction to Geotechnical Engineering
5. AISC, Steel Construction Manual, 13th Edition
6. Highway Innovative Technology Evaluation Center (HITEC), Evaluation of the Con/Span Wingwall System, CERF Report #40580, July 2001.
7. Contract Plans, "Project Number ER-BRF 015-1(23), Fire Drive Box Culvert, Jamaica VT" by VT AOT, Dated 12/5/2012, Email from VT AOT (5/23/2013) clarifying bearing capacity.

Assumptions:

1. It is assumed that the failure plane of the soil to be retained by this wall will lie within the proposed backfill material.
2. The proposed backfill material will meet the material requirements of the contract documents. This material is assumed to have a friction angle = 34 degrees and a dry unit weight = 140 pcf.
3. The installation of the weepholes combined with free draining backfill will preclude the development of hydrostatic pressures on the wall.
4. Passive earth pressure in front of the wall is ignored per AASHTO 11.6.3.5.
5. Site Layout. The 16x8 Box Culvert carries Fire Drive over unknown brook. All four wingwalls have varying skew. Wingwall 4C is closest to traffic. Wingwall 2B is tallest. Check both wings. Also Check WW3 with 3 anchors.
6. Backslope Angle. All 4 wings have a +- flat backslope.
7. Live Load Surcharge. Vehicular Surcharge is applied when traffic can come within a distance of half the height of the wall to the reinforced soil mass. Only WW3 and WW4 are within this distace. Assume traffic is 2 feet from face of wall and runs parallel to wall.
8. The HITEC Evaluation (page 3) explains that the Anchor Wall acts as a cantilever wall for most of its length since the weight of the soil within and above the anchors provides resistance to overturning. The wall also has attributes of a bin wall since arching and friction of soil masses between anchors provides additional resistance. Therefore, the provisions of AASHTO Sections 11.6 (Conventional Retaining Walls) and 11.11 (Modular Walls) shall be applied.
9. Per AASHTO 11.11.4.4, a maximum of 80% of the weight of the retained soil is effective in resisting overturning. The HITEC Evaluation (pages D29-D33) evaluated the accuracy of this assumption and found that using 80% of the soil weight is a conservative assumption.
10. The Top of Wingwall elevations are 2 inches below the top of headwall elevations.

General Input:

$ELV_{walltop} := 736.1ft$	Elevation of the Wingwall at its tallest point
$ELV_{walltip} := 734.1ft$	Elevation of Wingwall at its tip.
$ELV_{bot.ftg} := 715.9ft$	Elevation of the Bottom of the Wall Footing
$t_{ftg} := 3ft$	Thickness of Wall Footing
$h_{ftg} := 2ft$	Height of Wall Footing
$h_{short} := ELV_{walltip} - ELV_{bot.ftg} - h_{ftg} - 1in = 16.117\,ft$	Short end of wall (less 1" for shim)
$h_{tall} := ELV_{walltop} - ELV_{bot.ftg} - h_{ftg} - 1in = 18.117\,ft$	Tall end of wall (less 1" for shim)
$l_{wall} := 8ft$	Length of Wall Panel
$l_{flat} := 0ft$	Length of flat portion of wingwall before break in slope.
$t_{wall} := 12in$	Thickness of Wall Panel
$t_{stem} := 6in$	Thickness of Anchor Stem
$w_{flange} := 2ft + 6in$	Width of Anchor Flange
$\alpha_{skew} := 0deg$	Angle of ww skew in plan view, measured from edge of roadway. (to measure distance to traffic for each anchor)
$\theta_{wall} := 90deg$	Wall batter angle with horizontal
$\theta_{anchor} := \theta_{wall} + 30deg$	Anchor batter angle with horizontal
$\beta := atan\left(\frac{0}{5}\right) = 0 \cdot deg$	Backfill slope angle with horizontal, measured perpendicular to the wall.
$d_{traffic} := (20ft)$	Estimated minimum distance to traffic, measured from stream side of wall and perpendicular to the wall.
$BreakInSlope := 2ft$	Assumed distance from face of guardrail to break-in-slope, meaured perpendicular to the wall.

Wall Material Properties

Concrete

$f_c := 5000 \frac{lbf}{in^2}$ $E_c := 4074ksi$ $Aggregate_{diam} := .75in$

$\gamma_c := 150pcf$ Assumed unit weight of concrete panel.

β_1 = Stress Block Factor specified in Article 5.7.2.2

$$\beta_1 := \max\left[.65, \left[\begin{array}{l} .85 \quad \text{if } f_c < 4000psi \\ .85 - \frac{.05}{psi} \cdot \left(\frac{f_c - 4000psi}{1000}\right) \quad \text{otherwise} \end{array}\right]\right] = 0.8$$

Steel:

$f_y := 60000 \frac{lbf}{in^2}$ $E_s := 29000ksi$

Soil:

$q_R :=$ Factored Bearing Resistance to be determined based on effective footing width. This varies per anchor. Per Geotech Analysis, at the strength limit state:

Effective Footing Width (ft)	q_R (ksf)
4	11.8
6	14.0
8	16.2

$\gamma_s := 140pcf$ Assumed soil unit weight for all soil

$q_{sur} := 2ft \cdot \gamma_s = 280 \cdot psf$ Surcharge Soil Pressure (AASHTO Tbl 3.11.6.4-2)

$\phi_{ftg} := 35deg$ Friction Anlge of Soil below Wall Footing

$\phi_{backfill} := 34deg$ Friction Angle of Backfill Soil

$\delta_{wall} := 0.75 \cdot \phi_{backfill} = 25.5 \cdot deg$ AASHTO C3.11.5.9-1 and HITEC p.D19

$\delta_{anchor} := 0.50 \cdot \phi_{backfill} = 17 \cdot deg$ AASHTO C3.11.5.9-1 and HITEC p.D19

$$k_{a.wall} := \frac{\sin(\theta_{wall} + \phi_{backfill})^2}{\sin(\theta_{wall})^2 \cdot \sin(\theta_{wall} - \delta_{wall}) \cdot \left(1 + \sqrt{\frac{\sin(\phi_{backfill} + \delta_{wall}) \cdot \sin(\phi_{backfill} - \beta)}{\sin(\theta_{wall} - \delta_{wall}) \cdot \sin(\theta_{wall} + \beta)}}\right)^2} = 0.254$$

AASHTO 3.11.5.3

$$k_{a.anchor} := \frac{\sin(\theta_{anchor} + \phi_{backfill})^2}{\sin(\theta_{anchor})^2 \cdot \sin(\theta_{anchor} - \delta_{anchor}) \cdot \left(1 + \sqrt{\frac{\sin(\phi_{backfill} + \delta_{anchor}) \cdot \sin(\phi_{backfill} - \beta)}{\sin(\theta_{anchor} - \delta_{anchor}) \cdot \sin(\theta_{anchor} + \beta)}}\right)^2} = 0.089$$

AASHTO 3.11.5.3

$$k_0 := 1 - \sin(\phi_{backfill}) = 0.441$$

AASHTO 3.11.5.2-1

Determine Load Factors (Strength I) (AASHTO 1.3 and Table 3.4.1-1)

Load Modifiers

$\eta_D := 1.00$ Ductility for a conventional design

$\eta_R := 1.00$ Redundancy for conventional design

$\eta_I := 1.00$ Importance for a conventional bridge

$\eta_i := \max(\eta_D \cdot \eta_R \cdot \eta_I, 0.95)$ $\eta_i = 1$

Load Factor	Max	Min	Service	
γ_{DC}	1.25	0.9	1.0	Component Dead Loads
γ_{EH}	1.5	0.9	1.0	Horizontal Earth Loads
γ_{EV}	1.35	1.0	1.0	Vertical Earth Loads
γ_{LL}	1.75	1.75	1.0	Live Loads

Anchor Types, Layout and Backfill Geometry

$ConnectedToBridge := \text{"No"}$

To account for the connection of the wing to the bridge. Choose between Yes and No.

$AnchorType_1 := \text{"E"}$

$AnchorType_2 := \text{"E"}$

$AnchorType_3 := \text{"E"}$

Anchor Type to be tied to the back face of the wall. Chosen between Anchor Type B, C, D, and E as defined below.

$dist_{anchor.1} := 2ft$

$dist_{anchor.2} := 6ft$

$dist_{anchor.3} := 0$

Distance to each anchor is from culvert end of wing. Anchor 1 is closest to culvert.

Note: Research in HITEC report supports spacing from 2.5 ft (anchors are touching) to 5.5 feet (HITEC Report pages D29-D33). If distance between anchors increases beyond 5.5 ft, data supporting the usable 80% soil weight assumption shall be provided due to possible affects on soil arching between the anchors. Similarly, anchor closest to the wall tip shall not exceed 3 feet without supporting data.

If only 1 anchor is used, set $dist_{anchor2} = dist_{anchor3} = 0$.

If only 2 anchors are used, set $dist_{anchor3} = 0$.

Tributary Width of Wall for each Anchor

$$trib_{plates} := \begin{cases} 0 & \text{if } ConnectedToBridge = \text{"No"} \\ \frac{1}{2} \cdot dist_{anchor.1} & \text{otherwise} \end{cases} = 0\,ft$$

$$trib_1 := \begin{cases} l_{wall} - trib_{plates} & \text{if } dist_{anchor.2} = 0 \\ \frac{1}{2} \cdot \left(dist_{anchor.1} + dist_{anchor.2}\right) - trib_{plates} & \text{otherwise} \end{cases} = 4\,ft$$

$$trib_2 := \begin{cases} \left[l_{wall} - \frac{1}{2}\left(dist_{anchor.1} + dist_{anchor.2}\right)\right] & \text{if } dist_{anchor.3} = 0 \\ \frac{1}{2}\left(dist_{anchor.2} + dist_{anchor.3}\right) - \frac{1}{2}\left(dist_{anchor.1} + dist_{anchor.2}\right) & \text{otherwise} \end{cases} = 4\,ft$$

$$trib_3 := l_{wall} - \left(trib_1 + trib_2 + trib_{plates}\right) = 0\,ft$$

Height of Wall at CL of Each Anchor

$$h(x) := \begin{cases} 0 & \text{if } x = 0 \\ h_{tall} & \text{if } 0 < x \le l_{flat} \\ \left[h_{tall} - \left(\frac{h_{tall} - h_{short}}{l_{wall} - l_{flat}}\right)\cdot\left(x - l_{flat}\right)\right] & \text{otherwise} \end{cases}$$

$h_{wall.1} := h\left(dist_{anchor.1}\right) = 17.617\,ft$

$h_{wall.2} := h\left(dist_{anchor.2}\right) = 16.617\,ft$

$h_{wall.3} := h\left(dist_{anchor.3}\right) = 0\,ft$

Height of wall at each anchor

Length of each Anchor Stem Extension

$$W(x) := \begin{cases} (0ft) & \text{if } x = \text{"B"} \\ (1ft) & \text{if } x = \text{"C"} \\ (2ft) & \text{if } x = \text{"D"} \\ (3ft) & \text{if } x = \text{"E"} \end{cases}$$

$W_1 := W\left(AnchorType_1\right) = 3\,ft$

$W_2 := W\left(AnchorType_2\right) = 3\,ft$

$W_3 := W\left(AnchorType_3\right) = 3\,ft$

Width of Soil Column above each Anchor

B_{bot} is the width of the soil column at the top of the anchor, measured from backfill side of wall to upper tip of each anchor.

$$B_{bot.1} := W_1 + (3ft + 5.375in) + \frac{7in}{\cos(30deg)} = 7.121\,ft$$

$$B_{bot.2} := W_2 + (3ft + 5.375in) + \frac{7in}{\cos(30deg)} = 7.121\,ft$$

$$B_{bot.3} := W_3 + (3ft + 5.375in) + \frac{7in}{\cos(30deg)} = 7.121\,ft$$

$B_{bot.lower}$ is the width of the soil column at the bottom of the anchor, measured from backfill side of wall to bottom tip of anchor.

$$B_{bot.lower.1} := W_1 + \left(1ft + 4in + \frac{7in}{\cos(30deg)}\right) = 5.007\,ft$$

$$B_{bot.lower.2} := W_2 + \left(1ft + 4in + \frac{7in}{\cos(30deg)}\right) = 5.007\,ft$$

$$B_{bot.lower.3} := W_3 + \left(1ft + 4in + \frac{7in}{\cos(30deg)}\right) = 5.007\,ft$$

Perpendicular Distance to Traffic at each Anchor

$$d_{traffic.1} := d_{traffic} + dist_{anchor.1} \cdot \tan(\alpha_{skew}) = 20\,ft$$

$$d_{traffic.2} := d_{traffic} + dist_{anchor.2} \cdot \tan(\alpha_{skew}) = 20\,ft$$

$$d_{traffic.3} := d_{traffic} + dist_{anchor.3} \cdot \tan(\alpha_{skew}) = 20\,ft$$

Height of backfill at CL of each anchor

$$d_{slope.1} := \max(0, \min(B_{bot.1}, d_{traffic.1} - BreakInSlope - t_{wall})) = 7.121\,ft$$

$$d_{slope.2} := \max(0, \min(B_{bot.2}, d_{traffic.2} - BreakInSlope - t_{wall})) = 7.121\,ft$$

$$d_{slope.3} := \max(0, \min(B_{bot.3}, d_{traffic.3} - BreakInSlope - t_{wall})) = 7.121\,ft$$

Distance to break in slope, measured perpendicular to wall from inside face of wall, limited by B.bot.

$$h_{backfill.1} := \max(h_{wall.1}, h_{wall.1} + \min(B_{bot.1}, d_{slope.1}) \cdot \tan(\beta)) = 17.617\,ft$$

$$h_{backfill.2} := \max(h_{wall.2}, h_{wall.2} + \min(B_{bot.2}, d_{slope.2}) \cdot \tan(\beta)) = 16.617\,ft$$

$$h_{backfill.3} := \max(h_{wall.3}, h_{wall.3} + \min(B_{bot.3}, d_{slope.3}) \cdot \tan(\beta)) = 0\,ft$$

The height of backfill is taken at the end of the reinforced soil mass.

External Stability Analysis at Anchor 1

Calculate Vertical Loads and Associated Lever Arms ***(All Lever Arms are from Point "O")***

$$DC_{wall.1} := t_{wall} \cdot h_{wall.1} \cdot \gamma_c = 2.643 \cdot \frac{kip}{ft}$$

$$x_{DC.wall.1} := \frac{1}{2} t_{wall} = 0.5\,ft$$

$$EV1a_1 := \frac{1}{2} \gamma_s \cdot \left(h_{backfill.1} - h_{wall.1}\right) \cdot \left(d_{slope.1}\right) = 0 \cdot \frac{kip}{ft}$$

$$x_{EV1a.1} := t_{wall} + \frac{2}{3} d_{slope.1} = 5.748\,ft$$

$$EV1b_1 := \gamma_s \cdot \left(h_{backfill.1} - h_{wall.1}\right) \cdot \left(B_{bot.1} - d_{slope.1}\right) = 0 \cdot \frac{kip}{ft}$$

$$x_{EV1b.1} := t_{wall} + d_{slope.1} + \frac{1}{2}\left(B_{bot.1} - d_{slope.1}\right) = 8.121\,ft$$

$$EV2_1 := \gamma_s \cdot \left(h_{wall.1} - 3.5ft\right) \cdot B_{bot.1} = 14.074 \cdot \frac{kip}{ft}$$

$$x_{EV2.1} := t_{wall} + \frac{1}{2} B_{bot.1} = 4.561\,ft$$

$$EV3_1 := \gamma_s \cdot (3.5ft) \cdot \left(B_{bot.lower.1} - \frac{7in}{\cos(30deg)}\right) = 2.123 \cdot \frac{kip}{ft}$$

$$x_{EV3.1} := t_{wall} + \frac{1}{2}\left(B_{bot.lower.1} - \frac{7in}{\cos(30deg)}\right) = 3.167\,ft$$

$$EV4_1 := \gamma_s \cdot \frac{1}{2} \cdot 3.5ft \cdot \left[\left(W_1 + 3ft + 5.375in\right) - \left(B_{bot.lower.1} - \frac{7in}{\cos(30deg)}\right)\right] = 0.518 \cdot \frac{kip}{ft}$$

$$x_{EV4.1} := t_{wall} + B_{bot.lower.1} + \frac{1}{3} \cdot \left[W_1 + 3ft + 5.375in - \left(B_{bot.lower.1} - \frac{7in}{\cos(30deg)}\right)\right] = 6.712\,ft$$

$$DC_{anchor.1} := \frac{1}{trib_1} \cdot \begin{cases} (1740lbf) & \text{if } AnchorType_1 = \text{"B"} \\ (2010lbf) & \text{if } AnchorType_1 = \text{"C"} \\ (2285lbf) & \text{if } AnchorType_1 = \text{"D"} \\ (2550lbf) & \text{if } AnchorType_1 = \text{"E"} \end{cases} = 0.637 \cdot \frac{kip}{ft}$$

(See Anchor Geometry Drawing)

$$x_{anchor.1} := t_{wall} + \begin{cases} (2ft + 2.25in) & \text{if } AnchorType_1 = \text{"B"} \\ (2ft + 8.8125in) & \text{if } AnchorType_1 = \text{"C"} \\ (3ft + 5.125in) & \text{if } AnchorType_1 = \text{"D"} \\ (4ft + 0.0625in) & \text{if } AnchorType_1 = \text{"E"} \end{cases} = 5.005 \cdot ft$$

$$LS_{vert.1} := \begin{cases} \left[q_{sur} \cdot \left[B_{bot.1} - \left(d_{traffic.1}\right)\right]\right] & \text{if } d_{traffic.1} < B_{bot.1} \\ 0 & \text{otherwise} \end{cases} = 0 \cdot \frac{kip}{ft}$$

Used in bearing calcs only

$$x_{LS.vert.1} := t_{wall} + d_{traffic.1} + \frac{1}{2}\left(B_{bot.1} - d_{traffic.1}\right) = 14.561\,ft$$

$$DC_{ftg.1} := \gamma_c \cdot t_{ftg} \cdot h_{ftg} = 0.9 \cdot \frac{kip}{ft}$$

$$x_{DC.ftg.1} := \frac{t_{ftg}}{2} = 1.5\,ft$$

Note: This moment arm is measured from the front toe of the ftg since it is only used in bearing calculations.

Calculate Lateral Loads and Associated Lever Arms

$$EH1_{1.vert} := \frac{1}{2} k_{a.wall} \cdot \gamma_s \cdot \left(h_{backfill.1} - 3.5ft\right)^2 \cdot \sin\left(\delta_{wall}\right) = 1.527 \cdot \frac{kip}{ft}$$

$$EH1_{1.hor} := \frac{1}{2} k_{a.wall} \cdot \gamma_s \cdot \left(h_{backfill.1} - 3.5ft\right)^2 \cdot \cos\left(\delta_{wall}\right) = 3.201 \cdot \frac{kip}{ft}$$

$$x_{EH1.1} := t_{wall} + B_{bot.1} = 8.121\,ft$$

$$y_{EH1.1} := 3.5ft + \frac{1}{3}\left(h_{backfill.1} - 3.5ft\right) = 8.206\,ft$$

$$EH2_{1.vert} := k_{a.anchor} \cdot \gamma_s \cdot \left(h_{backfill.1} - 3.5ft\right) \cdot (4ft) \cdot \sin\left(\delta_{anchor} - 30deg\right) = -0.159 \cdot \frac{kip}{ft}$$

$$EH2_{1.hor} := k_{a.anchor} \cdot \gamma_s \cdot \left(h_{backfill.1} - 3.5ft\right) \cdot (4ft) \cdot \cos\left(\delta_{anchor} - 30deg\right) = 0.687 \cdot \frac{kip}{ft}$$

$$x_{EH2.1} := t_{wall} + \frac{1}{2}\left(B_{bot.1} + B_{bot.lower.1}\right) = 7.064\,ft$$

$$y_{EH2.1} := 3.5ft - \frac{1}{2} \cdot 4ft = 1.5\,ft$$

$$EH3_{1.vert} := \frac{1}{2} k_{a.anchor} \cdot \gamma_s \cdot (4ft)^2 \cdot \sin\left(\delta_{anchor} - 30deg\right) = -0.022 \cdot \frac{kip}{ft}$$

$$EH3_{1.hor} := \frac{1}{2} k_{a.anchor} \cdot \gamma_s \cdot (4ft)^2 \cdot \cos\left(\delta_{anchor} - 30deg\right) = 0.097 \cdot \frac{kip}{ft}$$

$$x_{EH3.1} := t_{wall} + B_{bot.lower.1} + \left(3.5ft - \frac{2}{3} \cdot 4ft\right) \tan(30deg) = 6.488\,ft$$

$$y_{EH3.1} := 3.5ft - \frac{2}{3} \cdot 4ft = 10 \cdot in$$

$$LS_{hor.1} := \begin{cases} \left(k_{a.wall} \cdot q_{sur} \cdot h_{backfill.1}\right) & \text{if } d_{traffic.1} < B_{bot.1} + \frac{h_{wall.1}}{2} \\ 0 & \text{otherwise} \end{cases} = 0 \cdot \frac{kip}{ft}$$

$$x_{LS.hor.1} := t_{wall} + \frac{1}{2}\left(B_{bot.lower.1} + B_{bot.1}\right) = 7.064\,ft$$ (Assumed for ease of calculation)

$$y_{LS.hor.1} := \frac{1}{2} h_{backfill.1} = 8.808\,ft$$

Check Sliding

Per AASHTO 11.11.4.2, Sliding shall be evaluated according to 10.6.3.4. Per 11.5.3, sliding shall be evaluated at the strength limit state. Use minimum load factors for vertical loads and maximum load factors for horizontal loads. Assume the failure plane is beneath the wall ftg, which will be grouted to the wall during construction. This is consistent with assumptions in the HITEC report (page D24).

Resisting Forces

$$\phi_\tau := 0.9$$ AASHTO Table 10.5.5.2.2-1, "Precast on Sand" or "Soil on Soil"

$$\Sigma V_1 := 0.9\left(DC_{wall.1} + DC_{anchor.1} + DC_{ftg.1}\right) + 1.0 \cdot \left(EV1a_1 + EV1b_1 + EV2_1 + EV3_1 + EV4_1\right) \ldots + \eta_i \cdot 1.50 \cdot \left(EH1_{1.vert} + EH2_{1.vert} + EH3_{1.vert}\right) = 22.497 \cdot \frac{kip}{ft}$$

$$R_{\tau.1} := 0.8 \cdot \tan\left(\phi_{ftg}\right) \cdot \Sigma V_1 = 12.602 \cdot \frac{kip}{ft}$$ AASHTO 10.6.3.4

$$\boxed{R_{r.1} := \phi_\tau \cdot R_{\tau.1} = 11.342 \cdot \frac{kip}{ft}}$$

Driving Forces

$$\Sigma H_{\tau.1} := \eta_i \cdot \left[1.50 \cdot \left(EH1_{1.hor} + EH2_{1.hor} + EH3_{1.hor}\right) + 1.75 LS_{hor.1}\right] = 5.977 \cdot \frac{kip}{ft}$$

$$Check_{sliding.1} := \begin{cases} \text{"OK"} & \text{if } \frac{R_{r.1}}{\Sigma H_{\tau.1}} \geq 1 \\ \text{"NG"} & \text{otherwise} \end{cases} = \text{"OK"}$$

Check Overturning and Eccentricity

Per AASHTO 11.11.4.4, Overturning shall be evaluated according to 11.6.3.3. A maximum of 80% of the retained soil shall be used to resist overturning. Per 11.6.3.3, evaluate overturning and eccentricity at the strength limit state using maximum load factors for horizontal loads and minimum load factors for vertical loads. First, evaluate overturning about front base of wall. If the wall passes the overturning check, the wing will not experience uplift with respect to the footing. Therefore evaluate eccentricity at the bottom of the footing. The location of the resultant of the reaction forces shall be located within the middle half of the base width (footing width plus anchor projection). Eccentricity is measured from the center of the base width toward the stream side of the footing. Assume that a negative eccentricity (beyond the center of the base, toward the backfill) is acceptable since this condition will engage passive earth pressures.

Resisting Forces

$$\begin{aligned} Resisting_1 := {} & 0.9\left(DC_{wall.1}\cdot x_{DC.wall.1} + DC_{anchor.1}\cdot x_{anchor.1}\right) \ldots \\ & + 1.0\cdot 0.8\cdot\left(EV1a_1\cdot x_{EV1a.1} + EV1b_1\cdot x_{EV1b.1} + EV2_1\cdot x_{EV2.1} + EV3_1\cdot x_{EV3.1} + EV4_1\cdot x_{EV4.1}\right) \ldots \\ & + 1.50\left(EH1_{1.vert}\cdot x_{EH1.1} + EH2_{1.vert}\cdot x_{EH2.1} + EH3_{1.vert}\cdot x_{EH3.1}\right) \end{aligned} = 80.276\cdot\frac{kip\cdot ft}{ft}$$

Driving Forces

$$Driving_1 := 1.50\cdot\left(EH1_{1.hor}\cdot y_{EH1.1} + EH2_{1.hor}\cdot y_{EH2.1} + EH3_{1.hor}\cdot y_{EH3.1}\right) + 1.75LS_{hor.1}\cdot y_{LS.hor.1} = 41.067\cdot\frac{kip\cdot ft}{ft}$$

$$Check_{OT.1} := \begin{cases} \text{"OK"} & \text{if } \dfrac{Resisting_1}{Driving_1} \ge 1 \\ \text{"NG"} & \text{otherwise} \end{cases} = \text{"OK"}$$

Eccentricity of Resultant

$$\begin{aligned} \Sigma V_{e.1} := {} & 0.9\left(DC_{wall.1} + DC_{anchor.1}\right) + 1.0\cdot 0.8\cdot\left(EV1a_1 + EV1b_1 + EV2_1 + EV3_1 + EV4_1\right) \ldots \\ & + 1.50\left(EH1_{1.vert} + EH2_{1.vert} + EH3_{1.vert}\right) \end{aligned} = 18.344\cdot\frac{kip}{ft}$$

$$l_1 := \frac{\left[\Sigma V_{e.1}\cdot\left[\dfrac{\left(Resisting_1 - Driving_1\right)}{\Sigma V_{e.1}} + \dfrac{1}{2}\left(t_{ftg} - t_{wall}\right)\right] + 0.9DC_{ftg.1}\cdot x_{DC.ftg.1}\right]}{\Sigma V_{e.1} + 0.9DC_{ftg.1}} = 3.068\,ft$$

(Distance to resultant from face of ftg)

$$B_1 := B_{bot.lower.1} + t_{wall} + \frac{1}{2}\left(t_{ftg} - t_{wall}\right) = 7.007\,ft$$

$$e_1 := \max\left(\frac{B_1}{2} - l_1, 0ft\right) = 0.435\,ft$$

$$e_{allow.1} := \frac{B_1}{4} = 1.752\,ft$$

(Within Middle Half of ftg per AASHTO 11.6.3.3)

$$Check_{e.1} := \begin{cases} \text{"OK"} & \text{if } \frac{e_1}{e_{allow.1}} \le 1 \\ \text{"NG"} & \text{otherwise} \end{cases} = \text{"OK"}$$

Check Bearing Pressure

Per 11.11.4.3 Evaluate bearing pressure with respect to resistance calculated in 10.6.3. Per HITEC p. D24, use the horizontal portion of the anchor at its base plus the footing width. Evaluate at the strength limit state. Use 100% of the weight of the retained soil. When Live Load Surcharge is present, Strength I with maximum load factors for vertical loads and horizontal loads controls. Include the effects of live load surcharge. Since lever arms are calculated from the front face of the wall, must add to the eccentricity the distance between wall and toe of footing.

$$\begin{aligned} Resisting_{brg.1} := {} & 1.25\left(DC_{wall.1}\cdot x_{DC.wall.1} + DC_{anchor.1}\cdot x_{anchor.1}\right) \ldots \\ & + 1.35\cdot\left(EV1a_1\cdot x_{EV1a.1} + EV1b_1\cdot x_{EV1b.1} + EV2_1\cdot x_{EV2.1} + EV3_1\cdot x_{EV3.1} + EV4_1\cdot x_{EV4.1}\right) \ldots \\ & + 1.35\left(EH1_{1.vert}\cdot x_{EH1.1} + EH2_{1.vert}\cdot x_{EH2.1} + EH3_{1.vert}\cdot x_{EH3.1}\right) \ldots \\ & + 1.75\cdot\left(LS_{vert.1}\cdot x_{LS.vert.1}\right) \end{aligned} = 121.1\cdot\frac{kip\cdot ft}{ft}$$

$$Driving_{brg.1} := 1.35\left(EH1_{1.hor}\cdot y_{EH1.1} + EH2_{1.hor}\cdot y_{EH2.1} + EH3_{1.hor}\cdot y_{EH3.1}\right) + 1.75LS_{hor.1}\cdot y_{LS.hor.1} = 36.96\cdot\frac{kip\cdot ft}{ft}$$

$$\begin{aligned} \Sigma V_{brg.1} := {} & 1.25\cdot\left(DC_{wall.1} + DC_{anchor.1}\right) + 1.35\cdot\left(EV1a_1 + EV1b_1 + EV2_1 + EV3_1 + EV4_1\right) \ldots \\ & + 1.35\cdot\left(EH1_{1.vert} + EH2_{1.vert} + EH3_{1.vert}\right) + 1.75\cdot\left(LS_{vert.1}\right) \end{aligned} = 28.483\cdot\frac{kip}{ft}$$

$$l_{brg.1} := \frac{\left[\Sigma V_{brg.1}\cdot\left[\frac{\left(Resisting_{brg.1} - Driving_{brg.1}\right)}{\Sigma V_{brg.1}} + \frac{1}{2}\left(t_{ftg} - t_{wall}\right)\right] + 1.25DC_{ftg.1}\cdot x_{DC.ftg.1}\right]}{\Sigma V_{brg.1} + 1.25DC_{ftg.1}} = 3.861\,ft$$

(Distance to resultant from face of ftg)

$$e_{brg.1} := \max\left(\frac{B_1}{2} - l_{brg.1}, 0ft\right) = 0\,ft$$

$$B_1 - 2\cdot e_{brg.1} = 7.007\,ft$$

Effective footing width

$$\sigma_{foot.1} := \frac{\Sigma V_{brg.1}}{B_1 - 2\cdot e_{brg.1}} = 4.065\cdot ksf$$

Eq. 11.6.3.2-1, Rectangular Distibution for Foundations on soil

$$q_{R.1} := 0.45\cdot 14.0ksf = 6.3\cdot ksf$$

Conservatively use resistance for 6ft width

$$CheckBearing_1 := \begin{cases} \text{"OK"} & \text{if } \frac{q_{R.1}}{\sigma_{foot.1}} \ge 1 \\ \text{"NG"} & \text{otherwise} \end{cases} = \text{"OK"}$$

External Stability Analysis at Anchor 2

Calculate Vertical Loads and Associated Lever Arms ***(All Lever Arms are from Point "O")***

$$DC_{wall.2} := t_{wall} \cdot h_{wall.2} \cdot \gamma_c = 2.493 \cdot \frac{kip}{ft}$$

$$x_{DC.wall.2} := \frac{1}{2} t_{wall} = 0.5\,ft$$

$$EV1a_2 := \frac{1}{2} \gamma_s \cdot \left(h_{backfill.2} - h_{wall.2}\right) \cdot \left(d_{slope.2}\right) = 0 \cdot \frac{kip}{ft}$$

$$x_{EV1a.2} := t_{wall} + \frac{2}{3} d_{slope.2} = 5.748\,ft$$

$$EV1b_2 := \gamma_s \cdot \left(h_{backfill.2} - h_{wall.2}\right) \cdot \left(B_{bot.2} - d_{slope.2}\right) = 0 \cdot \frac{kip}{ft}$$

$$x_{EV1b.2} := t_{wall} + d_{slope.2} + \frac{1}{2}\left(B_{bot.2} - d_{slope.2}\right) = 8.121\,ft$$

$$EV2_2 := \gamma_s \cdot \left(h_{wall.2} - 3.5ft\right) \cdot B_{bot.2} = 13.077 \cdot \frac{kip}{ft}$$

$$x_{EV2.2} := t_{wall} + \frac{1}{2} B_{bot.2} = 4.561\,ft$$

$$EV3_2 := \gamma_s \cdot (3.5ft) \cdot \left(B_{bot.lower.2} - \frac{7in}{\cos(30deg)}\right) = 2.123 \cdot \frac{kip}{ft}$$

$$x_{EV3.2} := t_{wall} + \frac{1}{2}\left(B_{bot.lower.2} - \frac{7in}{\cos(30deg)}\right) = 3.167\,ft$$

$$EV4_2 := \gamma_s \cdot \frac{1}{2} \cdot 3.5ft \cdot \left[\left(W_2 + 3ft + 5.375in\right) - \left(B_{bot.lower.2} - \frac{7in}{\cos(30deg)}\right)\right] = 0.518 \cdot \frac{kip}{ft}$$

$$x_{EV4.2} := t_{wall} + B_{bot.lower.2} + \frac{1}{3} \cdot \left[W_2 + 3ft + 5.375in - \left(B_{bot.lower.2} - \frac{7in}{\cos(30deg)}\right)\right] = 6.712\,ft$$

$$DC_{anchor.2} := \frac{1}{trib_2} \cdot \begin{cases} (1740lbf) & \text{if } AnchorType_2 = \text{"B"} \\ (2010lbf) & \text{if } AnchorType_2 = \text{"C"} \\ (2285lbf) & \text{if } AnchorType_2 = \text{"D"} \\ (2550lbf) & \text{if } AnchorType_2 = \text{"E"} \end{cases} = 0.637 \cdot \frac{kip}{ft}$$

(See Anchor Geometry Drawing)

$$x_{anchor.2} := t_{wall} + \begin{cases} (2ft + 2.25in) & \text{if } AnchorType_2 = \text{"B"} \\ (2ft + 8.8125in) & \text{if } AnchorType_2 = \text{"C"} \\ (3ft + 5.125in) & \text{if } AnchorType_2 = \text{"D"} \\ (4ft + 0.0625in) & \text{if } AnchorType_2 = \text{"E"} \end{cases} = 5.005 \cdot ft$$

$$LS_{vert.2} := \begin{cases} \left[q_{sur} \cdot \left[B_{bot.2} - \left(d_{traffic.2}\right)\right]\right] & \text{if } d_{traffic.2} < B_{bot.2} \\ 0 & \text{otherwise} \end{cases} = 0 \cdot \frac{kip}{ft}$$

Used in bearing calcs only

$$x_{LS.vert.2} := t_{wall} + d_{traffic.2} + \frac{1}{2}\left(B_{bot.2} - d_{traffic.2}\right) = 14.561\,ft$$

$$DC_{ftg.2} := \gamma_c \cdot t_{ftg} \cdot h_{ftg} = 0.9 \cdot \frac{kip}{ft}$$

$$x_{DC.ftg.2} := \frac{t_{ftg}}{2} = 1.5\,ft$$

Note: This moment arm is measured from the front toe of the ftg since it is only used in bearing calculations.

Calculate Lateral Loads and Associated Lever Arms

$$EH1_{2.vert} := \frac{1}{2} k_{a.wall} \cdot \gamma_s \cdot \left(h_{backfill.2} - 3.5ft\right)^2 \cdot \sin\left(\delta_{wall}\right) = 1.318 \cdot \frac{kip}{ft}$$

$$EH1_{2.hor} := \frac{1}{2} k_{a.wall} \cdot \gamma_s \cdot \left(h_{backfill.2} - 3.5ft\right)^2 \cdot \cos\left(\delta_{wall}\right) = 2.764 \cdot \frac{kip}{ft}$$

$$x_{EH1.2} := t_{wall} + B_{bot.2} = 8.121\,ft$$

$$y_{EH1.2} := 3.5ft + \frac{1}{3}\left(h_{backfill.2} - 3.5ft\right) = 7.872\,ft$$

$$EH2_{2.vert} := k_{a.anchor} \cdot \gamma_s \cdot \left(h_{backfill.2} - 3.5ft\right) \cdot (4ft) \cdot \sin\left(\delta_{anchor} - 30deg\right) = -0.147 \cdot \frac{kip}{ft}$$

$$EH2_{2.hor} := k_{a.anchor} \cdot \gamma_s \cdot \left(h_{backfill.2} - 3.5ft\right) \cdot (4ft) \cdot \cos\left(\delta_{anchor} - 30deg\right) = 0.638 \cdot \frac{kip}{ft}$$

$$x_{EH2.2} := t_{wall} + \frac{1}{2}\left(B_{bot.2} + B_{bot.lower.2}\right) = 7.064\,ft$$

$$y_{EH2.2} := 3.5ft - \frac{1}{2} \cdot 4ft = 1.5\,ft$$

$$EH3_{2.vert} := \frac{1}{2} k_{a.anchor} \cdot \gamma_s \cdot (4ft)^2 \cdot \sin\left(\delta_{anchor} - 30deg\right) = -0.022 \cdot \frac{kip}{ft}$$

$$EH3_{2.hor} := \frac{1}{2} k_{a.anchor} \cdot \gamma_s \cdot (4ft)^2 \cdot \cos\left(\delta_{anchor} - 30deg\right) = 0.097 \cdot \frac{kip}{ft}$$

$$x_{EH3.2} := t_{wall} + B_{bot.lower.2} + \left(3.5ft - \frac{2}{3}\cdot 4ft\right)\tan(30deg) = 6.488\,ft$$

$$y_{EH3.2} := 3.5ft - \frac{2}{3}\cdot 4ft = 10\cdot in$$

$$LS_{hor.2} := \begin{cases} \left(k_{a.wall}\cdot q_{sur}\cdot h_{backfill.2}\right) & \text{if } d_{traffic.2} < B_{bot.2} + \frac{h_{wall.2}}{2} \\ 0 & \text{otherwise} \end{cases} = 0\cdot\frac{kip}{ft}$$

$$x_{LS.hor.2} := t_{wall} + \frac{1}{2}\left(B_{bot.lower.2} + B_{bot.2}\right) = 7.064\,ft$$ (Assumed for ease of calculation)

$$y_{LS.hor.2} := \frac{1}{2}h_{backfill.2} = 8.308\,ft$$

Check Sliding

Per AASHTO 11.11.4.2, Sliding shall be evaluated according to 10.6.3.4. Per 11.5.3, sliding shall be evaluated at the strength limit state. Use minimum load factors for vertical loads and maximum load factors for horizontal loads. Assume the failure plane is beneath the wall ftg, which will be grouted to the wall during construction. This is consistent with assumptions in the HITEC report (page D24).

Resisting Forces

$\phi_\tau := 0.9$ AASHTO Table 10.5.5.2.2-1, "Precast on Sand" or "Soil on Soil"

$$\Sigma V_2 := 0.9\left(DC_{wall.2} + DC_{anchor.2} + DC_{ftg.2}\right) + 1.0\cdot\left(EV1a_2 + EV1b_2 + EV2_2 + EV3_2 + EV4_2\right) \ldots + \eta_i\cdot 1.50\cdot\left(EH1_{2.vert} + EH2_{2.vert} + EH3_{2.vert}\right) = 21.069\cdot\frac{kip}{ft}$$

$$R_{\tau.2} := 0.8\cdot\tan\left(\phi_{ftg}\right)\cdot\Sigma V_2 = 11.802\cdot\frac{kip}{ft}$$ AASHTO 10.6.3.4

$$\boxed{R_{r.2} := \phi_\tau\cdot R_{\tau.2} = 10.622\cdot\frac{kip}{ft}}$$

Driving Forces

$$\Sigma H_{\tau.2} := \eta_i\cdot\left[1.50\cdot\left(EH1_{2.hor} + EH2_{2.hor} + EH3_{2.hor}\right) + 1.75LS_{hor.2}\right] = 5.248\cdot\frac{kip}{ft}$$

$$Check_{sliding.2} := \begin{cases} \text{"OK"} & \text{if } \dfrac{R_{r.2}}{\Sigma H_{\tau.2}} \geq 1 \\ \text{"NG"} & \text{otherwise} \end{cases} = \text{"OK"}$$

Check Overturning and Eccentricity

Per AASHTO 11.11.4.4, Overturning shall be evaluated according to 11.6.3.3. A maximum of 80% of the retained soil shall be used to resist overturning. Per 11.6.3.3, evaluate overturning and eccentricity at the strength limit state using maximum load factors for horizontal loads and minimum load factors for vertical loads. First, evaluate overturning about front base of wall. If the wall passes the overturning check, the wing will not experience uplift with respect to the footing. Therefore evaluate eccentricity at the bottom of the footing. The location of the resultant of the reaction forces shall be located within the middle half of the base width (footing width plus anchor projection). Eccentricity is measured from the center of the base width toward the stream side of the footing. Assume that a negative eccentricity (beyond the center of the base, toward the backfill) is acceptable since this condition will engage passive earth pressures.

Resisting Forces

$$\begin{aligned} Resisting_2 := {} & 0.9\left(DC_{wall.2}\cdot x_{DC.wall.2} + DC_{anchor.2}\cdot x_{anchor.2}\right) \ldots \\ & + 1.0\cdot 0.8\cdot\left(EV1a_2\cdot x_{EV1a.2} + EV1b_2\cdot x_{EV1b.2} + EV2_2\cdot x_{EV2.2} + EV3_2\cdot x_{EV3.2} + EV4_2\cdot x_{EV4.2}\right) \ldots \\ & + 1.50\left(EH1_{2.vert}\cdot x_{EH1.2} + EH2_{2.vert}\cdot x_{EH2.2} + EH3_{2.vert}\cdot x_{EH3.2}\right) \end{aligned} = 74.148\cdot\frac{kip\cdot ft}{ft}$$

Driving Forces

$$Driving_2 := 1.50\cdot\left(EH1_{2.hor}\cdot y_{EH1.2} + EH2_{2.hor}\cdot y_{EH2.2} + EH3_{2.hor}\cdot y_{EH3.2}\right) + 1.75LS_{hor.2}\cdot y_{LS.hor.2} = 34.191\cdot\frac{kip\cdot ft}{ft}$$

$$Check_{OT.2} := \begin{cases} \text{"OK"} & \text{if } \dfrac{Resisting_2}{Driving_2} \geq 1 \\ \text{"NG"} & \text{otherwise} \end{cases} = \text{"OK"}$$

Eccentricity of Resultant

$$\begin{aligned} \Sigma V_{e.2} := {} & 0.9\left(DC_{wall.2} + DC_{anchor.2}\right) + 1.0\cdot 0.8\cdot\left(EV1a_2 + EV1b_2 + EV2_2 + EV3_2 + EV4_2\right) \ldots \\ & + 1.50\left(EH1_{2.vert} + EH2_{2.vert} + EH3_{2.vert}\right) \end{aligned} = 17.115\cdot\frac{kip}{ft}$$

$$l_2 := \frac{\left[\Sigma V_{e.2}\cdot\left[\dfrac{\left(Resisting_2 - Driving_2\right)}{\Sigma V_{e.2}} + \dfrac{1}{2}\left(t_{ftg} - t_{wall}\right)\right] + 0.9DC_{ftg.2}\cdot x_{DC.ftg.2}\right]}{\Sigma V_{e.2} + 0.9DC_{ftg.2}} = 3.252\,ft$$

(Distance to resultant from face of ftg)

$$B_2 := B_{bot.lower.2} + t_{wall} + \frac{1}{2}\left(t_{ftg} - t_{wall}\right) = 7.007\,ft$$

$$e_2 := \max\left(\frac{B_2}{2} - l_2, 0ft\right) = 0.252\,ft$$

$$e_{allow.2} := \frac{B_2}{4} = 1.752\,ft$$

(Within Middle Half of ftg per AASHTO 11.6.3.3)

$$Check_{e.2} := \begin{cases} \text{"OK"} & \text{if } \dfrac{e_2}{e_{allow.2}} \le 1 \\ \text{"NG"} & \text{otherwise} \end{cases} = \text{"OK"}$$

Check Bearing Pressure

Per 11.11.4.3 Evaluate bearing pressure with respect to resistance calculated in 10.6.3. Per HITEC p. D24, use the horizontal portion of the anchor at its base plus the footing width. Evaluate at the strength limit state. Use 100% of the weight of the retained soil. When Live Load Surcharge is present, Strength I with maximum load factors for vertical loads and horizontal loads controls. Include the effects of live load surcharge. Since lever arms are calculated from the front face of the wall, must add to the eccentricity the distance between wall and toe of footing.

$$\begin{aligned} Resisting_{brg.2} := {} & 1.25\left(DC_{wall.2}\cdot x_{DC.wall.2} + DC_{anchor.2}\cdot x_{anchor.2}\right) \ldots \\ & + 1.35\cdot\left(EV1a_2\cdot x_{EV1a.2} + EV1b_2\cdot x_{EV1b.2} + EV2_2\cdot x_{EV2.2} + EV3_2\cdot x_{EV3.2} + EV4_2\cdot x_{EV4.2}\right) \ldots \\ & + 1.35\left(EH1_{2.vert}\cdot x_{EH1.2} + EH2_{2.vert}\cdot x_{EH2.2} + EH3_{2.vert}\cdot x_{EH3.2}\right) \ldots \\ & + 1.75\cdot\left(LS_{vert.2}\cdot x_{LS.vert.2}\right) \end{aligned} = 112.687\cdot\frac{kip\cdot ft}{ft}$$

$$Driving_{brg.2} := 1.35\left(EH1_{2.hor}\cdot y_{EH1.2} + EH2_{2.hor}\cdot y_{EH2.2} + EH3_{2.hor}\cdot y_{EH3.2}\right) + 1.75LS_{hor.2}\cdot y_{LS.hor.2} = 30.772\cdot\frac{kip\cdot ft}{ft}$$

$$\begin{aligned} \Sigma V_{brg.2} := {} & 1.25\cdot\left(DC_{wall.2} + DC_{anchor.2}\right) + 1.35\cdot\left(EV1a_2 + EV1b_2 + EV2_2 + EV3_2 + EV4_2\right) \ldots \\ & + 1.35\cdot\left(EH1_{2.vert} + EH2_{2.vert} + EH3_{2.vert}\right) + 1.75\cdot\left(LS_{vert.2}\right) \end{aligned} = 26.683\cdot\frac{kip}{ft}$$

$$l_{brg.2} := \frac{\left[\Sigma V_{brg.2}\cdot\left[\dfrac{\left(Resisting_{brg.2} - Driving_{brg.2}\right)}{\Sigma V_{brg.2}} + \dfrac{1}{2}\left(t_{ftg} - t_{wall}\right)\right] + 1.25DC_{ftg.2}\cdot x_{DC.ftg.2}\right]}{\Sigma V_{brg.2} + 1.25DC_{ftg.2}} = 3.966\,ft$$

(Distance to resultant from face of ftg)

$$e_{brg.2} := \max\left(\frac{B_2}{2} - l_{brg.2}, 0ft\right) = 0\,ft$$

$$B_2 - 2\cdot e_{brg.2} = 7.007\,ft$$

Effective footing width

$$\sigma_{foot.2} := \frac{\Sigma V_{brg.2}}{B_2 - 2\cdot e_{brg.2}} = 3.808\cdot ksf$$

Eq. 11.6.3.2-1, Rectangular Distibution for Foundations on soil

$$q_{R.2} := 0.45\cdot 14.0ksf = 6.3\cdot ksf$$

Conservatively use resistance for 6ft width

$$CheckBearing_2 := \begin{cases} \text{"OK"} & \text{if } \dfrac{q_{R.2}}{\sigma_{foot.2}} \ge 1 \\ \text{"NG"} & \text{otherwise} \end{cases} = \text{"OK"}$$

Check Wall Reinforcement

Assume the wall stem is cantilevered above the anchor. Use tallest wall section above anchor. Use maximum horizontal load factors to calculate moments and shears. Use minimum load factor for axial compression.

Calculate Horizontal Loads and resp. Lever Arms at top of Anchor

$h_{wall.internal} := h_{wall.1} - 3.5ft = 14.117\,ft$

$EH_{wall} := \frac{1}{2} k_{a.wall} \cdot \gamma_s \cdot h_{wall.internal}^2 = 3.547 \cdot \frac{kip}{ft}$ $\qquad y_{EH.wall} := \frac{1}{3} h_{wall.internal} = 4.706\,ft$

$LS_{wall} := \begin{cases} 0 & \text{if } d_{traffic.1} \geq \frac{1}{2} \cdot h_{wall.1} \\ \left(k_{a.wall} \cdot q_{sur} \cdot h_{wall.internal}\right) & \text{otherwise} \end{cases} = 0 \cdot \frac{kip}{ft}$ $\qquad y_{LS.wall} := \frac{1}{2} h_{wall.internal} = 7.058\,ft$

$Mu_{wall} := \eta_i \cdot \left(1.5 \cdot EH_{wall} \cdot y_{EH.wall} + 1.75 LS_{wall} \cdot y_{LS.wall}\right) = 25.033 \cdot \frac{kip \cdot ft}{ft}$

$Vu_{wall} := \eta_i \cdot \left(1.5 EH_{wall} + 1.75 LS_{wall}\right) = 5.32 \cdot \frac{kip}{ft}$

$Nu_{wall} := -\eta_i \cdot \left(0.9 \cdot \gamma_c \cdot t_{wall} \cdot h_{wall.internal}\right) = -1.906 \cdot \frac{kip}{ft}$

Check Moment Capacity

$bar_{wall} := 6$ $\qquad s_{wall} := 7in$ $\qquad cover_{wall} := 2in$

$b_w := 1ft$

$diam_{wall} := \frac{bar_{wall}}{8} in = 0.75 \cdot in$

$As_{wall} := \frac{\pi \cdot diam_{wall}^2}{4} \cdot 12 \frac{in}{s_{wall}} = 0.757 \cdot in^2$

$d_{wall} := t_{wall} - cover_{wall} - \frac{diam_{wall}}{2} = 9.625 \cdot in$

$\phi_{moment} := 0.90$ $\qquad$ Per AASHTO 5.5.4.2.1

$\phi_{shear} := 0.90$ $\qquad$ Per AASHTO 5.5.4.2.1

Verify that f_y can be substituted for f_s in the equations of 5.7.3.2. This is allowed when $\frac{c}{d_s} \le 0.60$.

$c_{wall} := \frac{As_{wall} \cdot f_y}{0.85 \cdot f_c \cdot \beta_1 \cdot b_w} = 1.114 \cdot in$ Simplified equation 5.7.3.1.2-4

$\frac{c_{wall}}{d_{wall}} = 0.116$ **This is less than 0.60 therefore f_y can be substituted for f_s**

$a_{wall} := \beta_1 \cdot c_{wall} = 0.891 \cdot in$

$Mn_{wall} := As_{wall} \cdot f_y \cdot \left(d_{wall} - \frac{a_{wall}}{2} \right)$

$Mr_{wall} := \phi_{moment} \cdot Mn_{wall} = 31.284 \cdot kip \cdot ft$

$Mu_{wall} \cdot b_w = 25.033 \cdot kip \cdot ft$

$$Check_{WallFlexure} := \begin{cases} \text{"OK"} & \text{if } \frac{Mr_{wall}}{Mu_{wall} \cdot b_w} \ge 1 \\ \text{"NG"} & \text{otherwise} \end{cases} = \text{"OK"}$$

Check Minimum Flexural Reinforcement (5.7.3.3.2)

$f_r := 0.24 \cdot \sqrt{f_c \cdot ksi} = 0.537 \cdot ksi$ AASHTO 5.4.2.6

$I_{g.wall} := \frac{1}{12} \cdot b_w \cdot t_{wall}^3 = 1.728 \times 10^3 \cdot in^4$

$y_{t.wall} := \frac{t_{wall}}{2} = 6 \cdot in$ Distance from centroid to extreme tension fibers. Conservatively ignore reinforcement.

$S_{c.wall} := \frac{I_{g.wall}}{y_{t.wall}} = 288 \cdot in^3$

$\gamma_3 := 0.67$ 0.67 = Factor for Grade 60 ASTM A615 rebar

$\gamma_1 := 1.2$ 1.2 = Factor for precast segmental structures

$M_{cr.wall} := \gamma_3 \cdot \gamma_1 \cdot S_{c.wall} \cdot f_r = 10.355 \cdot kip \cdot ft$ Simplified AASHTO Eq 5.7.3.3.2-1

$1.33Mu_{wall} \cdot b_w = 33.294 \cdot kip \cdot ft$

$$Check_{MinSteelWall} := \begin{cases} \text{"OK"} & \text{if } Mr_{wall} \ge \min\left(1.33Mu_{wall} \cdot b_w, M_{cr.wall}\right) \\ \text{"NG"} & \text{otherwise} \end{cases} = \text{"OK"}$$

Shear Resistance at Bottom of Wall (Section 5.8.3.4.2)

The section contains less than the minimum transverse reinforcement specified in 5.8.2.5, therefore use equation 5.8.3.4.2-2 to determine the longitudinal strain effect factor (β) at the location of maximum shear.

$Mu := \max(Mu_{wall}, Vu_{wall} \cdot d_{wall})$

In the eqtn below Mu shall not be less than $Vu \cdot d_v$

$$\xi_{s_wall} := \frac{\frac{|Mu|}{d_{wall}} + 0.5Nu_{wall} + |Vu_{wall}|}{E_s \cdot As_{wall}} \cdot b_w \qquad 1000 \cdot \xi_{s_wall} = 1.62 \qquad (5.8.3.4.2\text{-}4)$$

$s_{x_wall} := d_{wall}$

$$s_{xe_wall} := s_{x_wall} \cdot \frac{1.38in}{Aggregate_{diam} + 0.63in} = 9.625 \cdot in \qquad (5.8.3.4.2\text{-}5)$$

$$\beta_{wall} := \left(\frac{4.8}{1 + 750 \cdot \xi_{s_wall}}\right) \cdot \left(\frac{51}{39 + \frac{s_{xe_wall}}{1in}}\right) = 2.273 \qquad (5.8.3.4.2\text{-}2)$$

$$\Theta_{wall} := 29deg + 3500deg \cdot \xi_{s_wall} = 34.67 \cdot deg \qquad (5.8.3.4.2\text{-}3)$$

$$Vn_{wall} := \min\left(0.25 \cdot f_c \cdot b_w \cdot d_{wall}, 0.0316 \cdot \beta_{wall} \cdot \sqrt{f_c \cdot ksi} \cdot b_w \cdot d_{wall}\right) = 18.55 \cdot kip \qquad (5.8.3.3)$$

$Vr_{wall} := \phi_{shear} \cdot Vn_{wall} = 16.695 \cdot kip$

$Vu_{wall} \cdot b_w = 5.32 \cdot kip$

$$Check_{WallShear} := \begin{cases} \text{"OK"} & \text{if } \frac{Vr_{wall}}{Vu_{wall} \cdot b_w} \geq 1 \\ \text{"NG"} & \text{otherwise} \end{cases} = \text{"OK"}$$

Check Crack Control in Section 5.7.3.4

$$Ms_{wall} := \eta_i \cdot \left(1.0 \cdot EH_{wall} \cdot y_{EH.wall} + 1.0LS_{wall} \cdot y_{LS.wall}\right) = 16.689 \cdot \frac{kip \cdot ft}{ft}$$

$$Ns_{wall} := -\eta_i \cdot \left(1.0 \cdot \gamma_c \cdot t_{wall} \cdot h_{wall.internal}\right) = -2.118 \cdot \frac{kip}{ft}$$

$$e_{wall} := \max\left[\left(\frac{Ms_{wall}}{Ns_{wall}} + d_{wall} - \frac{t_{wall}}{2}\right), 1.15 \cdot d_{wall}\right] = 0.922\,ft$$

$$j_{wall} := \min\left[\left[0.74 + .1 \cdot \left(\frac{e_{wall}}{d_{wall}}\right)\right], 0.9\right] = 0.855$$

$$i_{wall} := \frac{1}{1 - \left(j_{wall} \cdot \frac{d_{wall}}{e_{wall}}\right)} = 3.898$$

$$fss_{wall} := \frac{Ms_{wall} + Ns_{wall} \cdot \left(d_{wall} - \frac{t_{wall}}{2}\right)}{As_{wall} \cdot j_{wall} \cdot i_{wall} \cdot d_{wall}} = 7.927 \cdot \frac{ksi}{ft}$$

Stress in Reinforcement at Service Limit State

$$d_{c_wall} := t_{wall} - d_{wall} = 2.375 \cdot in$$

$$\beta_s := 1 + \frac{d_{c_wall}}{0.7 \cdot \left(t_{wall} - d_{c_wall}\right)} = 1.353$$

$$\gamma_e := 1.00$$

exposure factor

$$s_{max} := \frac{700\,\frac{kip}{in} \cdot \gamma_e}{\beta_s \cdot fss_{wall} \cdot b_w} - 2 \cdot d_{c_wall} = 60.543 \cdot in$$

$$Check_{MaxSpacing} := \begin{cases} \text{"OK"} & \text{if } s_{wall} \le s_{max} \\ \text{"NG"} & \text{otherwise} \end{cases} = \text{"OK"}$$

Check Minimum Bar Spacing in Section 5.10.3.1.2:

$$s_{min} := \max\left(diam_{wall}, 1.33 Aggregate_{diam}, 1in\right) = 1 \cdot in$$

$$Check_{MinSpacing} := \begin{cases} \text{"OK"} & \text{if } s_{wall} \ge s_{min} \\ \text{"NG"} & \text{otherwise} \end{cases} = \text{"OK"}$$

Check Maximum Bar Spacing in Section 5.10.3.2:

$$s_{max} := \min\left(1.5 \cdot t_{wall}, 18in\right) = 18 \cdot in$$

$$Check_{MaxSpacing} := \begin{cases} \text{"OK"} & \text{if } s_{wall} \le s_{max} \\ \text{"NG"} & \text{otherwise} \end{cases} = \text{"OK"}$$

Check Anchor Attachment to Wall

Check Moment Capacity of Connection Bars

Conservatively assume the entire wall is cantilevered about the footing, therefore consider only driving moments. Use total loads instead of loads per foot. Use 100% of soil weight. Must determine controlling anchor, since tributary width is variable, not necessarily the anchor at the tallest wall. Assume only top four connection bars resist tension. This assumption is consistent with HITEC p.D28.

$Mu_{anchor} := \max(Driving_{brg.1} \cdot trib_1, Driving_{brg.2} \cdot trib_2) = 147.841 \cdot kip \cdot ft$

$bar_{anchor} := 5$ size of bar

$diam_{anchor} := \frac{bar_{anchor}}{8} in = 0.625 \cdot in$

$As_{anchor} := \frac{\pi}{4} \cdot diam_{anchor}^2 = 0.307 \cdot in^2$

$n := 6$ Number of bars in tension

$b_{anchor} := t_{stem} = 6 \cdot in$ thickness of anchor stem

$h_{stem} := 3ft + 6in$ height of anchor stem

$d_{anchor} := 30.5in$ distance from centroid of tension reinforcement extreme compression fiber.

Verify that f_y can be substituted for f_s in the equations of 5.7.3.2. This is allowed when $\frac{c}{d_s} \le 0.60$.

$c_{anchor} := \frac{n \cdot As_{anchor} \cdot f_y}{0.85 \cdot f_c \cdot \beta_1 \cdot b_{anchor}} = 5.414 \cdot in$ Simplified equation 5.7.3.1.2-4

$\frac{c_{anchor}}{d_{anchor}} = 0.178$ **This is less than 0.60 therefore f_y can be substituted for f_s**

$a_{anchor} := \beta_1 \cdot c_{anchor} = 4.331 \cdot in$

$Mn_{anchor} := n \cdot As_{anchor} \cdot f_y \cdot \left(d_{anchor} - \frac{a_{anchor}}{2}\right)$

$Mr_{anchor} := \phi_{moment} \cdot Mn_{anchor} = 234.708 \cdot kip \cdot ft$

$Mu_{anchor} = 147.841 \cdot kip \cdot ft$

$$Check_{AnchorFlexure} := \begin{cases} \text{"OK"} & \text{if } \frac{Mr_{anchor}}{Mu_{anchor}} \ge 1 \\ \text{"NG"} & \text{otherwise} \end{cases} = \text{"OK"}$$

Check Minimum Flexural Reinforcement (5.7.3.3.2)

$f_r = 0.537 \cdot ksi$ AASHTO 5.4.2.6

$I_{g.anchor} := \frac{1}{12} \cdot t_{stem} \cdot h_{stem}^3 = 3.704 \times 10^4 \cdot in^4$

$y_{t.anchor} := \frac{h_{stem}}{2} = 1.75\,ft$ Distance from centroid to extreme tension fibers. Conservatively ignore reinforcement.

$S_{c.anchor} := \frac{I_{g.anchor}}{y_{t.anchor}} = 1.764 \times 10^3 \cdot in^3$

$\gamma_3 := 0.67$ 0.67 = Factor for Grade 60 ASTM A615 rebar

$\gamma_1 := 1.2$ 1.2 = Factor for precast segmental structures

$M_{cr.anchor} := \gamma_3 \cdot \gamma_1 \cdot S_{c.anchor} \cdot f_r = 63.426 \cdot kip \cdot ft$ Simplified AASHTO Eq 5.7.3.3.2-1

$1.33Mu_{anchor} \cdot b_w = 196.628\,ft \cdot kip \cdot ft$

$$Check_{MinSteelAnchor} := \begin{cases} \text{"OK"} & \text{if } Mr_{anchor} \geq \min(1.33Mu_{anchor}, M_{cr.anchor}) \\ \text{"NG"} & \text{otherwise} \end{cases} = \text{"OK"}$$

Check Minimum Steel for Temperature and Shrinkage (11.6.1.5.1 & 5.10.8)

$$As_{min.anchor} := \max\left[0.11\frac{in^2}{ft}, \min\left[0.60\frac{in^2}{ft}, \frac{1.30 \cdot b_{anchor} \cdot h_{stem}}{2 \cdot (b_{anchor} + h_{stem}) \cdot \frac{f_y}{ksi}}\right]\right] = 0.6 \cdot \frac{in^2}{ft}$$

$As_{min.anchor} \cdot h_{stem} = 2.1 \cdot in^2$

$As_{anchor} \cdot (n + 2) = 2.454 \cdot in^2$ Account for extra two bars in compression face

Check Hook Development of Connection Steel in Wall

Per 5.10.2, A standard hook with a 180 degree bend shall have a 4*db extension, but not less than 2.5 inches. Per 5.12.3, Cover beyond free end of bar shall be 2 inches.

$$l_{hb} := \frac{38.0 diam_{anchor}}{\sqrt{\left(\frac{f_c}{ksi}\right)}} = 10.621 \cdot in$$

Basic development length for a Grade 60 bar with a standard hook (AASHTO 5.11.2.4.1)

Modification Factors to be applied to the Basic Development Length (AASHTO 5.11.2.4.2)

$M_{strength} := 1$ — Increase by fy/60 for yield strength greater than 60ksi

$M_{cover} := 0.7$ — 0.7 if side cover normal to plane of hook is at least 2.5 inches AND Cover beyond hook is at least 2.0in

$M_{stirrups} := 1.0$ — 0.8 if hook is enclose in with ties or stirrups as specified in 5.11.2.4.2

$M_{As} := 1.0$ — Conservatively assume entire area of steel provided is required.

$M_{lightweight} := 1.0$ — 1.3 if lightweight concrete is used.

$M_{epoxy} := 1.0$ — 1.2 if epoxy rebar is used.

$$M := M_{strength} \cdot M_{cover} \cdot M_{stirrups} \cdot M_{As} \cdot M_{lightweight} \cdot M_{epoxy} = 0.7$$

$$l_{dh} := \max(6in, 8 \cdot diam_{anchor}, M \cdot l_{hb}) = 7.435 \cdot in$$

$$t_{wall.min} := cover_{wall} + l_{dh} = 9.435 \cdot in$$

$$Check_{Wall.Thickness} := \begin{cases} \text{"OK"} & \text{if } t_{wall} \geq t_{wall.min} \\ \text{"NG"} & \text{otherwise} \end{cases} = \text{"OK"}$$

Design/Analysis References:

1. AASHTO LRFD Bridge Design Specifications, 2012.
2. VTrans 2011 Standard Specifications for Road and Bridge Construction.
3. Das, Principles of Foundation Engineering, 5th Edition.
4. Holtz & Kovacs, Introduction to Geotechnical Engineering
5. AISC, Steel Construction Manual, 13th Edition
6. Highway Innovative Technology Evaluation Center (HITEC), Evaluation of the Con/Span Wingwall System, CERF Report #40580, July 2001.
7. Contract Plans, "Project Number ER-BRF 015-1(23), Fire Drive Box Culvert, Jamaica VT" by VT AOT, Dated 12/5/2012, Email from VT AOT (5/23/2013) clarifying bearing capacity.

Assumptions:

1. It is assumed that the failure plane of the soil to be retained by this wall will lie within the proposed backfill material.
2. The proposed backfill material will meet the material requirements of the contract documents. This material is assumed to have a friction angle = 34 degrees and a dry unit weight = 140 pcf.
3. The installation of the weepholes combined with free draining backfill will preclude the development of hydrostatic pressures on the wall.
4. Passive earth pressure in front of the wall is ignored per AASHTO 11.6.3.5.
5. Site Layout. The 16x8 Box Culvert carries Fire Drive over unknown brook. All four wingwalls have varying skew. Wingwall 4C is closest to traffic. Wingwall 2B is tallest. Check both wings. Also Check WW3 with 3 anchors.
6. Backslope Angle. All 4 wings have a +- flat backslope.
7. Live Load Surcharge. Vehicular Surcharge is applied when traffic can come within a distance of half the height of the wall to the reinforced soil mass. Only WW3 and WW4 are within this distace. Assume traffic is 2 feet from face of wall and runs parallel to wall.
8. The HITEC Evaluation (page 3) explains that the Anchor Wall acts as a cantilever wall for most of its length since the weight of the soil within and above the anchors provides resistance to overturning. The wall also has attributes of a bin wall since arching and friction of soil masses between anchors provides additional resistance. Therefore, the provisions of AASHTO Sections 11.6 (Conventional Retaining Walls) and 11.11 (Modular Walls) shall be applied.
9. Per AASHTO 11.11.4.4, a maximum of 80% of the weight of the retained soil is effective in resisting overturning. The HITEC Evaluation (pages D29-D33) evaluated the accuracy of this assumption and found that using 80% of the soil weight is a conservative assumption.
10. The Top of Wingwall elevations are 2 inches below the top of headwall elevations.

General Input:

$ELV_{walltop} := 735.67ft - 2in = 735.503\,ft$	Elevation of the Wingwall at its tallest point
$ELV_{walltip} := ELV_{walltop} - 4.5in = 735.128\,ft$	Elevation of Wingwall at its tip.
$ELV_{bot.ftg} := 719.14ft$	Elevation of the Bottom of the Wall Footing
$t_{ftg} := 3ft$	Thickness of Wall Footing
$h_{ftg} := 2ft$	Height of Wall Footing
$h_{short} := ELV_{walltip} - ELV_{bot.ftg} - h_{ftg} - 1in = 13.905\,ft$	Short end of wall (less 1" for shim)
$h_{tall} := ELV_{walltop} - ELV_{bot.ftg} - h_{ftg} - 1in = 14.28\,ft$	Tall end of wall (less 1" for shim)
$l_{wall} := 11.5ft$	Length of Wall Panel
$l_{flat} := 1ft$	Length of flat portion of wingwall before break in slope.
$t_{wall} := 12in$	Thickness of Wall Panel
$t_{stem} := 6in$	Thickness of Anchor Stem
$w_{flange} := 2ft + 6in$	Width of Anchor Flange
$\alpha_{skew} := 0deg$	Angle of ww skew in plan view, measured from edge of roadway. (to measure distance to traffic for each anchor)
$\theta_{wall} := 90deg$	Wall batter angle with horizontal
$\theta_{anchor} := \theta_{wall} + 30deg$	Anchor batter angle with horizontal
$\beta := atan\left(\frac{0}{5}\right) = 0 \cdot deg$	Backfill slope angle with horizontal, measured perpendicular to the wall.
$d_{traffic} := (2ft)$	Estimated minimum distance to traffic, measured from stream side of wall and perpendicular to the wall.
$BreakInSlope := 2ft$	Assumed distance from face of guardrail to break-in-slope, meaured perpendicular to the wall.

Wall Material Properties

Concrete

$f_c := 5000 \frac{lbf}{in^2}$ $E_c := 4074ksi$ $Aggregate_{diam} := .75in$

$\gamma_c := 150pcf$ Assumed unit weight of concrete panel.

β_1 = Stress Block Factor specified in Article 5.7.2.2

$$\beta_1 := \max\left[.65, \left[\begin{array}{l} .85 \quad \text{if } f_c < 4000psi \\ .85 - \frac{.05}{psi} \cdot \left(\frac{f_c - 4000psi}{1000}\right) \quad \text{otherwise} \end{array}\right]\right] = 0.8$$

Steel:

$f_y := 60000 \frac{lbf}{in^2}$ $E_s := 29000ksi$

Soil:

$q_R :=$ Factored Bearing Resistance to be determined based on effective footing width. This varies per anchor. Per Geotech Analysis, at the strength limit state:

Effective Footing Width (ft)	q_R (ksf)
4	11.8
6	14.0
8	16.2

$\gamma_s := 140pcf$ Assumed soil unit weight for all soil

$q_{sur} := 2ft \cdot \gamma_s = 280 \cdot psf$ Surcharge Soil Pressure (AASHTO Tbl 3.11.6.4-2)

$\phi_{ftg} := 35deg$ Friction Anlge of Soil below Wall Footing

$\phi_{backfill} := 34deg$ Friction Angle of Backfill Soil

$\delta_{wall} := 0.75 \cdot \phi_{backfill} = 25.5 \cdot deg$ AASHTO C3.11.5.9-1 and HITEC p.D19

$\delta_{anchor} := 0.50 \cdot \phi_{backfill} = 17 \cdot deg$ AASHTO C3.11.5.9-1 and HITEC p.D19

$$k_{a.wall} := \frac{\sin(\theta_{wall} + \phi_{backfill})^2}{\sin(\theta_{wall})^2 \cdot \sin(\theta_{wall} - \delta_{wall}) \cdot \left(1 + \sqrt{\frac{\sin(\phi_{backfill} + \delta_{wall}) \cdot \sin(\phi_{backfill} - \beta)}{\sin(\theta_{wall} - \delta_{wall}) \cdot \sin(\theta_{wall} + \beta)}}\right)^2} = 0.254$$

AASHTO 3.11.5.3

$$k_{a.anchor} := \frac{\sin(\theta_{anchor} + \phi_{backfill})^2}{\sin(\theta_{anchor})^2 \cdot \sin(\theta_{anchor} - \delta_{anchor}) \cdot \left(1 + \sqrt{\frac{\sin(\phi_{backfill} + \delta_{anchor}) \cdot \sin(\phi_{backfill} - \beta)}{\sin(\theta_{anchor} - \delta_{anchor}) \cdot \sin(\theta_{anchor} + \beta)}}\right)^2} = 0.089$$

AASHTO 3.11.5.3

$$k_0 := 1 - \sin(\phi_{backfill}) = 0.441$$

AASHTO 3.11.5.2-1

Determine Load Factors (Strength I) (AASHTO 1.3 and Table 3.4.1-1)

Load Modifiers

$\eta_D := 1.00$ Ductility for a conventional design

$\eta_R := 1.00$ Redundancy for conventional design

$\eta_I := 1.00$ Importance for a conventional bridge

$\eta_i := \max(\eta_D \cdot \eta_R \cdot \eta_I, 0.95)$ $\eta_i = 1$

Load Factor	Max	Min	Service	
γ_{DC}	1.25	0.9	1.0	Component Dead Loads
γ_{EH}	1.5	0.9	1.0	Horizontal Earth Loads
γ_{EV}	1.35	1.0	1.0	Vertical Earth Loads
γ_{LL}	1.75	1.75	1.0	Live Loads

Anchor Types, Layout and Backfill Geometry

$ConnectedToBridge := \text{"No"}$

To account for the connection of the wing to the bridge. Choose between Yes and No.

$AnchorType_1 := \text{"E"}$

$AnchorType_2 := \text{"E"}$

$AnchorType_3 := \text{"E"}$

Anchor Type to be tied to the back face of the wall. Chosen between Anchor Type B, C, D, and E as defined below.

$dist_{anchor.1} := 1.5ft$

$dist_{anchor.2} := 5.5ft$

$dist_{anchor.3} := 9.5ft$

Distance to each anchor is from culvert end of wing. Anchor 1 is closest to culvert.

Note: Research in HITEC report supports spacing from 2.5 ft (anchors are touching) to 5.5 feet (HITEC Report pages D29-D33). If distance between anchors increases beyond 5.5 ft, data supporting the usable 80% soil weight assumption shall be provided due to possible affects on soil arching between the anchors. Similarly, anchor closest to the wall tip shall not exceed 3 feet without supporting data.

If only 1 anchor is used, set $dist_{anchor2} = dist_{anchor3} = 0$.

If only 2 anchors are used, set $dist_{anchor3} = 0$.

Tributary Width of Wall for each Anchor

$$trib_{plates} := \begin{cases} 0 & \text{if } ConnectedToBridge = \text{"No"} \\ \frac{1}{2} \cdot dist_{anchor.1} & \text{otherwise} \end{cases} = 0\,ft$$

$$trib_1 := \begin{cases} l_{wall} - trib_{plates} & \text{if } dist_{anchor.2} = 0 \\ \frac{1}{2} \cdot \left(dist_{anchor.1} + dist_{anchor.2}\right) - trib_{plates} & \text{otherwise} \end{cases} = 3.5\,ft$$

$$trib_2 := \begin{cases} \left[l_{wall} - \frac{1}{2}\left(dist_{anchor.1} + dist_{anchor.2}\right)\right] & \text{if } dist_{anchor.3} = 0 \\ \frac{1}{2}\left(dist_{anchor.2} + dist_{anchor.3}\right) - \frac{1}{2}\left(dist_{anchor.1} + dist_{anchor.2}\right) & \text{otherwise} \end{cases} = 4\,ft$$

$$trib_3 := l_{wall} - \left(trib_1 + trib_2 + trib_{plates}\right) = 4\,ft$$

Height of Wall at CL of Each Anchor

$$h(x) := \begin{cases} 0 & \text{if } x = 0 \\ h_{tall} & \text{if } 0 < x \le l_{flat} \\ \left[h_{tall} - \left(\frac{h_{tall} - h_{short}}{l_{wall} - l_{flat}}\right)\cdot\left(x - l_{flat}\right)\right] & \text{otherwise} \end{cases}$$

$h_{wall.1} := h\left(dist_{anchor.1}\right) = 14.262\,ft$

$h_{wall.2} := h\left(dist_{anchor.2}\right) = 14.119\,ft$

$h_{wall.3} := h\left(dist_{anchor.3}\right) = 13.976\,ft$

Height of wall at each anchor

Length of each Anchor Stem Extension

$$W(x) := \begin{cases} (0ft) & \text{if } x = \text{"B"} \\ (1ft) & \text{if } x = \text{"C"} \\ (2ft) & \text{if } x = \text{"D"} \\ (3ft) & \text{if } x = \text{"E"} \end{cases}$$

$W_1 := W\left(AnchorType_1\right) = 3\,ft$

$W_2 := W\left(AnchorType_2\right) = 3\,ft$

$W_3 := W\left(AnchorType_3\right) = 3\,ft$

Width of Soil Column above each Anchor

B_{bot} is the width of the soil column at the top of the anchor, measured from backfill side of wall to upper tip of each anchor.

$$B_{bot.1} := W_1 + (3ft + 5.375in) + \frac{7in}{\cos(30deg)} = 7.121\,ft$$

$$B_{bot.2} := W_2 + (3ft + 5.375in) + \frac{7in}{\cos(30deg)} = 7.121\,ft$$

$$B_{bot.3} := W_3 + (3ft + 5.375in) + \frac{7in}{\cos(30deg)} = 7.121\,ft$$

$B_{bot.lower}$ is the width of the soil column at the bottom of the anchor, measured from backfill side of wall to bottom tip of anchor.

$$B_{bot.lower.1} := W_1 + \left(1ft + 4in + \frac{7in}{\cos(30deg)}\right) = 5.007\,ft$$

$$B_{bot.lower.2} := W_2 + \left(1ft + 4in + \frac{7in}{\cos(30deg)}\right) = 5.007\,ft$$

$$B_{bot.lower.3} := W_3 + \left(1ft + 4in + \frac{7in}{\cos(30deg)}\right) = 5.007\,ft$$

Perpendicular Distance to Traffic at each Anchor

$$d_{traffic.1} := d_{traffic} + dist_{anchor.1} \cdot \tan(\alpha_{skew}) = 2\,ft$$

$$d_{traffic.2} := d_{traffic} + dist_{anchor.2} \cdot \tan(\alpha_{skew}) = 2\,ft$$

$$d_{traffic.3} := d_{traffic} + dist_{anchor.3} \cdot \tan(\alpha_{skew}) = 2\,ft$$

Height of backfill at CL of each anchor

$$d_{slope.1} := \max(0, \min(B_{bot.1}, d_{traffic.1} - BreakInSlope - t_{wall})) = 0\,ft$$

$$d_{slope.2} := \max(0, \min(B_{bot.2}, d_{traffic.2} - BreakInSlope - t_{wall})) = 0\,ft$$

$$d_{slope.3} := \max(0, \min(B_{bot.3}, d_{traffic.3} - BreakInSlope - t_{wall})) = 0\,ft$$

Distance to break in slope, measured perpendicular to wall from inside face of wall, limited by B.bot.

$$h_{backfill.1} := \max(h_{wall.1}, h_{wall.1} + \min(B_{bot.1}, d_{slope.1}) \cdot \tan(\beta)) = 14.262\,ft$$

$$h_{backfill.2} := \max(h_{wall.2}, h_{wall.2} + \min(B_{bot.2}, d_{slope.2}) \cdot \tan(\beta)) = 14.119\,ft$$

$$h_{backfill.3} := \max(h_{wall.3}, h_{wall.3} + \min(B_{bot.3}, d_{slope.3}) \cdot \tan(\beta)) = 13.976\,ft$$

The height of backfill is taken at the end of the reinforced soil mass.

External Stability Analysis at Anchor 1

Calculate Vertical Loads and Associated Lever Arms ***(All Lever Arms are from Point "O")***

$$DC_{wall.1} := t_{wall} \cdot h_{wall.1} \cdot \gamma_c = 2.139 \cdot \frac{kip}{ft}$$

$$x_{DC.wall.1} := \frac{1}{2} t_{wall} = 0.5\,ft$$

$$EV1a_1 := \frac{1}{2} \gamma_s \cdot \left(h_{backfill.1} - h_{wall.1}\right) \cdot \left(d_{slope.1}\right) = 0 \cdot \frac{kip}{ft}$$

$$x_{EV1a.1} := t_{wall} + \frac{2}{3} d_{slope.1} = 1\,ft$$

$$EV1b_1 := \gamma_s \cdot \left(h_{backfill.1} - h_{wall.1}\right) \cdot \left(B_{bot.1} - d_{slope.1}\right) = 0 \cdot \frac{kip}{ft}$$

$$x_{EV1b.1} := t_{wall} + d_{slope.1} + \frac{1}{2}\left(B_{bot.1} - d_{slope.1}\right) = 4.561\,ft$$

$$EV2_1 := \gamma_s \cdot \left(h_{wall.1} - 3.5ft\right) \cdot B_{bot.1} = 10.73 \cdot \frac{kip}{ft}$$

$$x_{EV2.1} := t_{wall} + \frac{1}{2} B_{bot.1} = 4.561\,ft$$

$$EV3_1 := \gamma_s \cdot (3.5ft) \cdot \left(B_{bot.lower.1} - \frac{7in}{\cos(30deg)}\right) = 2.123 \cdot \frac{kip}{ft}$$

$$x_{EV3.1} := t_{wall} + \frac{1}{2}\left(B_{bot.lower.1} - \frac{7in}{\cos(30deg)}\right) = 3.167\,ft$$

$$EV4_1 := \gamma_s \cdot \frac{1}{2} \cdot 3.5ft \cdot \left[\left(W_1 + 3ft + 5.375in\right) - \left(B_{bot.lower.1} - \frac{7in}{\cos(30deg)}\right)\right] = 0.518 \cdot \frac{kip}{ft}$$

$$x_{EV4.1} := t_{wall} + B_{bot.lower.1} + \frac{1}{3} \cdot \left[W_1 + 3ft + 5.375in - \left(B_{bot.lower.1} - \frac{7in}{\cos(30deg)}\right)\right] = 6.712\,ft$$

$$DC_{anchor.1} := \frac{1}{trib_1} \cdot \begin{cases} (1740lbf) & \text{if } AnchorType_1 = \text{"B"} \\ (2010lbf) & \text{if } AnchorType_1 = \text{"C"} \\ (2285lbf) & \text{if } AnchorType_1 = \text{"D"} \\ (2550lbf) & \text{if } AnchorType_1 = \text{"E"} \end{cases} = 0.729 \cdot \frac{kip}{ft}$$

(See Anchor Geometry Drawing)

$$x_{anchor.1} := t_{wall} + \begin{cases} (2ft + 2.25in) & \text{if } AnchorType_1 = \text{"B"} \\ (2ft + 8.8125in) & \text{if } AnchorType_1 = \text{"C"} \\ (3ft + 5.125in) & \text{if } AnchorType_1 = \text{"D"} \\ (4ft + 0.0625in) & \text{if } AnchorType_1 = \text{"E"} \end{cases} = 5.005 \cdot ft$$

$$LS_{vert.1} := \begin{cases} \left[q_{sur} \cdot \left[B_{bot.1} - \left(d_{traffic.1}\right)\right]\right] & \text{if } d_{traffic.1} < B_{bot.1} \\ 0 & \text{otherwise} \end{cases} = 1.434 \cdot \frac{kip}{ft}$$

Used in bearing calcs only

$$x_{LS.vert.1} := t_{wall} + d_{traffic.1} + \frac{1}{2}\left(B_{bot.1} - d_{traffic.1}\right) = 5.561\,ft$$

$$DC_{ftg.1} := \gamma_c \cdot t_{ftg} \cdot h_{ftg} = 0.9 \cdot \frac{kip}{ft}$$

$$x_{DC.ftg.1} := \frac{t_{ftg}}{2} = 1.5\,ft$$

Note: This moment arm is measured from the front toe of the ftg since it is only used in bearing calculations.

Calculate Lateral Loads and Associated Lever Arms

$$EH1_{1.vert} := \frac{1}{2} k_{a.wall} \cdot \gamma_s \cdot \left(h_{backfill.1} - 3.5ft\right)^2 \cdot \sin\left(\delta_{wall}\right) = 0.887 \cdot \frac{kip}{ft}$$

$$EH1_{1.hor} := \frac{1}{2} k_{a.wall} \cdot \gamma_s \cdot \left(h_{backfill.1} - 3.5ft\right)^2 \cdot \cos\left(\delta_{wall}\right) = 1.861 \cdot \frac{kip}{ft}$$

$$x_{EH1.1} := t_{wall} + B_{bot.1} = 8.121\,ft$$

$$y_{EH1.1} := 3.5ft + \frac{1}{3}\left(h_{backfill.1} - 3.5ft\right) = 7.087\,ft$$

$$EH2_{1.vert} := k_{a.anchor} \cdot \gamma_s \cdot \left(h_{backfill.1} - 3.5ft\right) \cdot (4ft) \cdot \sin\left(\delta_{anchor} - 30deg\right) = -0.121 \cdot \frac{kip}{ft}$$

$$EH2_{1.hor} := k_{a.anchor} \cdot \gamma_s \cdot \left(h_{backfill.1} - 3.5ft\right) \cdot (4ft) \cdot \cos\left(\delta_{anchor} - 30deg\right) = 0.523 \cdot \frac{kip}{ft}$$

$$x_{EH2.1} := t_{wall} + \frac{1}{2}\left(B_{bot.1} + B_{bot.lower.1}\right) = 7.064\,ft$$

$$y_{EH2.1} := 3.5ft - \frac{1}{2} \cdot 4ft = 1.5\,ft$$

$$EH3_{1.vert} := \frac{1}{2} k_{a.anchor} \cdot \gamma_s \cdot (4ft)^2 \cdot \sin\left(\delta_{anchor} - 30deg\right) = -0.022 \cdot \frac{kip}{ft}$$

$$EH3_{1.hor} := \frac{1}{2} k_{a.anchor} \cdot \gamma_s \cdot (4ft)^2 \cdot \cos\left(\delta_{anchor} - 30deg\right) = 0.097 \cdot \frac{kip}{ft}$$

$$x_{EH3.1} := t_{wall} + B_{bot.lower.1} + \left(3.5ft - \frac{2}{3} \cdot 4ft\right) \tan(30deg) = 6.488\,ft$$

$$y_{EH3.1} := 3.5ft - \frac{2}{3} \cdot 4ft = 10 \cdot in$$

$$LS_{hor.1} := \begin{cases} \left(k_{a.wall} \cdot q_{sur} \cdot h_{backfill.1}\right) & \text{if } d_{traffic.1} < B_{bot.1} + \frac{h_{wall.1}}{2} \\ 0 & \text{otherwise} \end{cases} = 1.015 \cdot \frac{kip}{ft}$$

$$x_{LS.hor.1} := t_{wall} + \frac{1}{2}\left(B_{bot.lower.1} + B_{bot.1}\right) = 7.064\,ft$$ (Assumed for ease of calculation)

$$y_{LS.hor.1} := \frac{1}{2} h_{backfill.1} = 7.131\,ft$$

Check Sliding

Per AASHTO 11.11.4.2, Sliding shall be evaluated according to 10.6.3.4. Per 11.5.3, sliding shall be evaluated at the strength limit state. Use minimum load factors for vertical loads and maximum load factors for horizontal loads. Assume the failure plane is beneath the wall ftg, which will be grouted to the wall during construction. This is consistent with assumptions in the HITEC report (page D24).

Resisting Forces

$$\phi_\tau := 0.9$$ AASHTO Table 10.5.5.2.2-1, "Precast on Sand" or "Soil on Soil"

$$\Sigma V_1 := 0.9\left(DC_{wall.1} + DC_{anchor.1} + DC_{ftg.1}\right) + 1.0 \cdot \left(EV1a_1 + EV1b_1 + EV2_1 + EV3_1 + EV4_1\right) \ldots + \eta_i \cdot 1.50 \cdot \left(EH1_{1.vert} + EH2_{1.vert} + EH3_{1.vert}\right) = 17.879 \cdot \frac{kip}{ft}$$

$$R_{\tau.1} := 0.8 \cdot \tan\left(\phi_{ftg}\right) \cdot \Sigma V_1 = 10.015 \cdot \frac{kip}{ft}$$ AASHTO 10.6.3.4

$$\boxed{R_{r.1} := \phi_\tau \cdot R_{\tau.1} = 9.014 \cdot \frac{kip}{ft}}$$

Driving Forces

$$\Sigma H_{\tau.1} := \eta_i \cdot \left[1.50 \cdot \left(EH1_{1.hor} + EH2_{1.hor} + EH3_{1.hor}\right) + 1.75 LS_{hor.1}\right] = 5.499 \cdot \frac{kip}{ft}$$

$$Check_{sliding.1} := \begin{cases} \text{"OK"} & \text{if } \frac{R_{r.1}}{\Sigma H_{\tau.1}} \geq 1 \\ \text{"NG"} & \text{otherwise} \end{cases} = \text{"OK"}$$

Check Overturning and Eccentricity

Per AASHTO 11.11.4.4, Overturning shall be evaluated according to 11.6.3.3. A maximum of 80% of the retained soil shall be used to resist overturning. Per 11.6.3.3, evaluate overturning and eccentricity at the strength limit state using maximum load factors for horizontal loads and minimum load factors for vertical loads. First, evaluate overturning about front base of wall. If the wall passes the overturning check, the wing will not experience uplift with respect to the footing. Therefore evaluate eccentricity at the bottom of the footing. The location of the resultant of the reaction forces shall be located within the middle half of the base width (footing width plus anchor projection). Eccentricity is measured from the center of the base width toward the stream side of the footing. Assume that a negative eccentricity (beyond the center of the base, toward the backfill) is acceptable since this condition will engage passive earth pressures.

Resisting Forces

$$\begin{aligned} Resisting_1 := {} & 0.9\left(DC_{wall.1}\cdot x_{DC.wall.1} + DC_{anchor.1}\cdot x_{anchor.1}\right) \ldots \\ & + 1.0\cdot 0.8\cdot\left(EV1a_1\cdot x_{EV1a.1} + EV1b_1\cdot x_{EV1b.1} + EV2_1\cdot x_{EV2.1} + EV3_1\cdot x_{EV3.1} + EV4_1\cdot x_{EV4.1}\right) \ldots \\ & + 1.50\left(EH1_{1.vert}\cdot x_{EH1.1} + EH2_{1.vert}\cdot x_{EH2.1} + EH3_{1.vert}\cdot x_{EH3.1}\right) \end{aligned} = 60.867\cdot\frac{kip\cdot ft}{ft}$$

Driving Forces

$$Driving_1 := 1.50\cdot\left(EH1_{1.hor}\cdot y_{EH1.1} + EH2_{1.hor}\cdot y_{EH2.1} + EH3_{1.hor}\cdot y_{EH3.1}\right) + 1.75LS_{hor.1}\cdot y_{LS.hor.1} = 33.749\cdot\frac{kip\cdot ft}{ft}$$

$$Check_{OT.1} := \begin{cases} \text{"OK"} & \text{if } \dfrac{Resisting_1}{Driving_1} \ge 1 \\ \text{"NG"} & \text{otherwise} \end{cases} = \text{"OK"}$$

Eccentricity of Resultant

$$\begin{aligned} \Sigma V_{e.1} := {} & 0.9\left(DC_{wall.1} + DC_{anchor.1}\right) + 1.0\cdot 0.8\cdot\left(EV1a_1 + EV1b_1 + EV2_1 + EV3_1 + EV4_1\right) \ldots \\ & + 1.50\left(EH1_{1.vert} + EH2_{1.vert} + EH3_{1.vert}\right) \end{aligned} = 14.394\cdot\frac{kip}{ft}$$

$$l_1 := \frac{\left[\Sigma V_{e.1}\cdot\left[\dfrac{\left(Resisting_1 - Driving_1\right)}{\Sigma V_{e.1}} + \dfrac{1}{2}\left(t_{ftg} - t_{wall}\right)\right] + 0.9DC_{ftg.1}\cdot x_{DC.ftg.1}\right]}{\Sigma V_{e.1} + 0.9DC_{ftg.1}} = 2.81\,ft$$

(Distance to resultant from face of ftg)

$$B_1 := B_{bot.lower.1} + t_{wall} + \frac{1}{2}\left(t_{ftg} - t_{wall}\right) = 7.007\,ft$$

$$e_1 := \max\left(\frac{B_1}{2} - l_1, 0ft\right) = 0.693\,ft$$

$$e_{allow.1} := \frac{B_1}{4} = 1.752\,ft$$

(Within Middle Half of ftg per AASHTO 11.6.3.3)

$$Check_{e.1} := \begin{cases} \text{"OK"} & \text{if } \frac{e_1}{e_{allow.1}} \le 1 \\ \text{"NG"} & \text{otherwise} \end{cases} = \text{"OK"}$$

Check Bearing Pressure

Per 11.11.4.3 Evaluate bearing pressure with respect to resistance calculated in 10.6.3. Per HITEC p. D24, use the horizontal portion of the anchor at its base plus the footing width. Evaluate at the strength limit state. Use 100% of the weight of the retained soil. When Live Load Surcharge is present, Strength I with maximum load factors for vertical loads and horizontal loads controls. Include the effects of live load surcharge. Since lever arms are calculated from the front face of the wall, must add to the eccentricity the distance between wall and toe of footing.

$$\begin{aligned} Resisting_{brg.1} := {} & 1.25\left(DC_{wall.1}\cdot x_{DC.wall.1} + DC_{anchor.1}\cdot x_{anchor.1}\right) \ldots \\ & + 1.35\cdot\left(EV1a_1\cdot x_{EV1a.1} + EV1b_1\cdot x_{EV1b.1} + EV2_1\cdot x_{EV2.1} + EV3_1\cdot x_{EV3.1} + EV4_1\cdot x_{EV4.1}\right) \ldots \\ & + 1.35\left(EH1_{1.vert}\cdot x_{EH1.1} + EH2_{1.vert}\cdot x_{EH2.1} + EH3_{1.vert}\cdot x_{EH3.1}\right) \ldots \\ & + 1.75\cdot\left(LS_{vert.1}\cdot x_{LS.vert.1}\right) \end{aligned} = 108.067\cdot\frac{kip\cdot ft}{ft}$$

$$Driving_{brg.1} := 1.35\left(EH1_{1.hor}\cdot y_{EH1.1} + EH2_{1.hor}\cdot y_{EH2.1} + EH3_{1.hor}\cdot y_{EH3.1}\right) + 1.75LS_{hor.1}\cdot y_{LS.hor.1} = 31.641\cdot\frac{kip\cdot ft}{ft}$$

$$\begin{aligned} \Sigma V_{brg.1} := {} & 1.25\cdot\left(DC_{wall.1} + DC_{anchor.1}\right) + 1.35\cdot\left(EV1a_1 + EV1b_1 + EV2_1 + EV3_1 + EV4_1\right) \ldots \\ & + 1.35\cdot\left(EH1_{1.vert} + EH2_{1.vert} + EH3_{1.vert}\right) + 1.75\cdot\left(LS_{vert.1}\right) \end{aligned} = 25.15\cdot\frac{kip}{ft}$$

$$l_{brg.1} := \frac{\left[\Sigma V_{brg.1}\cdot\left[\frac{\left(Resisting_{brg.1} - Driving_{brg.1}\right)}{\Sigma V_{brg.1}} + \frac{1}{2}\left(t_{ftg} - t_{wall}\right)\right] + 1.25DC_{ftg.1}\cdot x_{DC.ftg.1}\right]}{\Sigma V_{brg.1} + 1.25DC_{ftg.1}} = 3.93\,ft$$

(Distance to resultant from face of ftg)

$$e_{brg.1} := \max\left(\frac{B_1}{2} - l_{brg.1}, 0ft\right) = 0\,ft$$

$$B_1 - 2\cdot e_{brg.1} = 7.007\,ft$$

Effective footing width

$$\sigma_{foot.1} := \frac{\Sigma V_{brg.1}}{B_1 - 2\cdot e_{brg.1}} = 3.589\cdot ksf$$

Eq. 11.6.3.2-1, Rectangular Distibution for Foundations on soil

$$q_{R.1} := 0.45\cdot 14.0ksf = 6.3\cdot ksf$$

Conservatively use resistance for 6ft width

$$CheckBearing_1 := \begin{cases} \text{"OK"} & \text{if } \frac{q_{R.1}}{\sigma_{foot.1}} \ge 1 \\ \text{"NG"} & \text{otherwise} \end{cases} = \text{"OK"}$$

External Stability Analysis at Anchor 2

Calculate Vertical Loads and Associated Lever Arms ***(All Lever Arms are from Point "O")***

$$DC_{wall.2} := t_{wall} \cdot h_{wall.2} \cdot \gamma_c = 2.118 \cdot \frac{kip}{ft}$$

$$x_{DC.wall.2} := \frac{1}{2} t_{wall} = 0.5\,ft$$

$$EV1a_2 := \frac{1}{2} \gamma_s \cdot \left(h_{backfill.2} - h_{wall.2}\right) \cdot \left(d_{slope.2}\right) = 0 \cdot \frac{kip}{ft}$$

$$x_{EV1a.2} := t_{wall} + \frac{2}{3} d_{slope.2} = 1\,ft$$

$$EV1b_2 := \gamma_s \cdot \left(h_{backfill.2} - h_{wall.2}\right) \cdot \left(B_{bot.2} - d_{slope.2}\right) = 0 \cdot \frac{kip}{ft}$$

$$x_{EV1b.2} := t_{wall} + d_{slope.2} + \frac{1}{2}\left(B_{bot.2} - d_{slope.2}\right) = 4.561\,ft$$

$$EV2_2 := \gamma_s \cdot \left(h_{wall.2} - 3.5ft\right) \cdot B_{bot.2} = 10.588 \cdot \frac{kip}{ft}$$

$$x_{EV2.2} := t_{wall} + \frac{1}{2} B_{bot.2} = 4.561\,ft$$

$$EV3_2 := \gamma_s \cdot (3.5ft) \cdot \left(B_{bot.lower.2} - \frac{7in}{\cos(30deg)}\right) = 2.123 \cdot \frac{kip}{ft}$$

$$x_{EV3.2} := t_{wall} + \frac{1}{2}\left(B_{bot.lower.2} - \frac{7in}{\cos(30deg)}\right) = 3.167\,ft$$

$$EV4_2 := \gamma_s \cdot \frac{1}{2} \cdot 3.5ft \cdot \left[\left(W_2 + 3ft + 5.375in\right) - \left(B_{bot.lower.2} - \frac{7in}{\cos(30deg)}\right)\right] = 0.518 \cdot \frac{kip}{ft}$$

$$x_{EV4.2} := t_{wall} + B_{bot.lower.2} + \frac{1}{3} \cdot \left[W_2 + 3ft + 5.375in - \left(B_{bot.lower.2} - \frac{7in}{\cos(30deg)}\right)\right] = 6.712\,ft$$

$$DC_{anchor.2} := \frac{1}{trib_2} \cdot \begin{cases} (1740lbf) & \text{if } AnchorType_2 = \text{"B"} \\ (2010lbf) & \text{if } AnchorType_2 = \text{"C"} \\ (2285lbf) & \text{if } AnchorType_2 = \text{"D"} \\ (2550lbf) & \text{if } AnchorType_2 = \text{"E"} \end{cases} = 0.638 \cdot \frac{kip}{ft}$$

(See Anchor Geometry Drawing)

$$x_{anchor.2} := t_{wall} + \begin{cases} (2ft + 2.25in) & \text{if } AnchorType_2 = \text{"B"} \\ (2ft + 8.8125in) & \text{if } AnchorType_2 = \text{"C"} \\ (3ft + 5.125in) & \text{if } AnchorType_2 = \text{"D"} \\ (4ft + 0.0625in) & \text{if } AnchorType_2 = \text{"E"} \end{cases} = 5.005 \cdot ft$$

$$LS_{vert.2} := \begin{cases} \left[q_{sur} \cdot \left[B_{bot.2} - \left(d_{traffic.2}\right)\right]\right] & \text{if } d_{traffic.2} < B_{bot.2} \\ 0 & \text{otherwise} \end{cases} = 1.434 \cdot \frac{kip}{ft}$$

Used in bearing calcs only

$$x_{LS.vert.2} := t_{wall} + d_{traffic.2} + \frac{1}{2}\left(B_{bot.2} - d_{traffic.2}\right) = 5.561\,ft$$

$$DC_{ftg.2} := \gamma_c \cdot t_{ftg} \cdot h_{ftg} = 0.9 \cdot \frac{kip}{ft}$$

$$x_{DC.ftg.2} := \frac{t_{ftg}}{2} = 1.5\,ft$$

Note: This moment arm is measured from the front toe of the ftg since it is only used in bearing calculations.

Calculate Lateral Loads and Associated Lever Arms

$$EH1_{2.vert} := \frac{1}{2} k_{a.wall} \cdot \gamma_s \cdot \left(h_{backfill.2} - 3.5ft\right)^2 \cdot \sin\left(\delta_{wall}\right) = 0.864 \cdot \frac{kip}{ft}$$

$$EH1_{2.hor} := \frac{1}{2} k_{a.wall} \cdot \gamma_s \cdot \left(h_{backfill.2} - 3.5ft\right)^2 \cdot \cos\left(\delta_{wall}\right) = 1.811 \cdot \frac{kip}{ft}$$

$$x_{EH1.2} := t_{wall} + B_{bot.2} = 8.121\,ft$$

$$y_{EH1.2} := 3.5ft + \frac{1}{3}\left(h_{backfill.2} - 3.5ft\right) = 7.04\,ft$$

$$EH2_{2.vert} := k_{a.anchor} \cdot \gamma_s \cdot \left(h_{backfill.2} - 3.5ft\right) \cdot (4ft) \cdot \sin\left(\delta_{anchor} - 30deg\right) = -0.119 \cdot \frac{kip}{ft}$$

$$EH2_{2.hor} := k_{a.anchor} \cdot \gamma_s \cdot \left(h_{backfill.2} - 3.5ft\right) \cdot (4ft) \cdot \cos\left(\delta_{anchor} - 30deg\right) = 0.516 \cdot \frac{kip}{ft}$$

$$x_{EH2.2} := t_{wall} + \frac{1}{2}\left(B_{bot.2} + B_{bot.lower.2}\right) = 7.064\,ft$$

$$y_{EH2.2} := 3.5ft - \frac{1}{2} \cdot 4ft = 1.5\,ft$$

$$EH3_{2.vert} := \frac{1}{2} k_{a.anchor} \cdot \gamma_s \cdot (4ft)^2 \cdot \sin\left(\delta_{anchor} - 30deg\right) = -0.022 \cdot \frac{kip}{ft}$$

$$EH3_{2.hor} := \frac{1}{2} k_{a.anchor} \cdot \gamma_s \cdot (4ft)^2 \cdot \cos\left(\delta_{anchor} - 30deg\right) = 0.097 \cdot \frac{kip}{ft}$$

$$x_{EH3.2} := t_{wall} + B_{bot.lower.2} + \left(3.5ft - \frac{2}{3}\cdot 4ft\right)\tan(30deg) = 6.488\,ft$$

$$y_{EH3.2} := 3.5ft - \frac{2}{3}\cdot 4ft = 10\cdot in$$

$$LS_{hor.2} := \begin{cases} \left(k_{a.wall}\cdot q_{sur}\cdot h_{backfill.2}\right) & \text{if } d_{traffic.2} < B_{bot.2} + \frac{h_{wall.2}}{2} \\ 0 & \text{otherwise} \end{cases} = 1.005\cdot\frac{kip}{ft}$$

$$x_{LS.hor.2} := t_{wall} + \frac{1}{2}\left(B_{bot.lower.2} + B_{bot.2}\right) = 7.064\,ft$$ (Assumed for ease of calculation)

$$y_{LS.hor.2} := \frac{1}{2}h_{backfill.2} = 7.06\,ft$$

Check Sliding

Per AASHTO 11.11.4.2, Sliding shall be evaluated according to 10.6.3.4. Per 11.5.3, sliding shall be evaluated at the strength limit state. Use minimum load factors for vertical loads and maximum load factors for horizontal loads. Assume the failure plane is beneath the wall ftg, which will be grouted to the wall during construction. This is consistent with assumptions in the HITEC report (page D24).

Resisting Forces

$$\phi_{\tau} := 0.9$$ AASHTO Table 10.5.5.2.2-1, "Precast on Sand" or "Soil on Soil"

$$\Sigma V_2 := 0.9\left(DC_{wall.2} + DC_{anchor.2} + DC_{ftg.2}\right) + 1.0\cdot\left(EV1a_2 + EV1b_2 + EV2_2 + EV3_2 + EV4_2\right) \ldots + \eta_i\cdot 1.50\cdot\left(EH1_{2.vert} + EH2_{2.vert} + EH3_{2.vert}\right) = 17.602\cdot\frac{kip}{ft}$$

$$R_{\tau.2} := 0.8\cdot\tan\left(\phi_{ftg}\right)\cdot\Sigma V_2 = 9.86\cdot\frac{kip}{ft}$$ AASHTO 10.6.3.4

$$\boxed{R_{r.2} := \phi_{\tau}\cdot R_{\tau.2} = 8.874\cdot\frac{kip}{ft}}$$

Driving Forces

$$\Sigma H_{\tau.2} := \eta_i\cdot\left[1.50\cdot\left(EH1_{2.hor} + EH2_{2.hor} + EH3_{2.hor}\right) + 1.75LS_{hor.2}\right] = 5.397\cdot\frac{kip}{ft}$$

$$Check_{sliding.2} := \begin{cases} \text{"OK"} & \text{if } \dfrac{R_{r.2}}{\Sigma H_{\tau.2}} \geq 1 \\ \text{"NG"} & \text{otherwise} \end{cases} = \text{"OK"}$$

Check Overturning and Eccentricity

Per AASHTO 11.11.4.4, Overturning shall be evaluated according to 11.6.3.3. A maximum of 80% of the retained soil shall be used to resist overturning. Per 11.6.3.3, evaluate overturning and eccentricity at the strength limit state using maximum load factors for horizontal loads and minimum load factors for vertical loads. First, evaluate overturning about front base of wall. If the wall passes the overturning check, the wing will not experience uplift with respect to the footing. Therefore evaluate eccentricity at the bottom of the footing. The location of the resultant of the reaction forces shall be located within the middle half of the base width (footing width plus anchor projection). Eccentricity is measured from the center of the base width toward the stream side of the footing. Assume that a negative eccentricity (beyond the center of the base, toward the backfill) is acceptable since this condition will engage passive earth pressures.

Resisting Forces

$$\begin{aligned} Resisting_2 := {} & 0.9\left(DC_{wall.2}\cdot x_{DC.wall.2} + DC_{anchor.2}\cdot x_{anchor.2}\right) \ldots \\ & + 1.0\cdot 0.8\cdot\left(EV1a_2\cdot x_{EV1a.2} + EV1b_2\cdot x_{EV1b.2} + EV2_2\cdot x_{EV2.2} + EV3_2\cdot x_{EV3.2} + EV4_2\cdot x_{EV4.2}\right) \ldots \\ & + 1.50\left(EH1_{2.vert}\cdot x_{EH1.2} + EH2_{2.vert}\cdot x_{EH2.2} + EH3_{2.vert}\cdot x_{EH3.2}\right) \end{aligned} = 59.659\cdot\frac{kip\cdot ft}{ft}$$

Driving Forces

$$Driving_2 := 1.50\cdot\left(EH1_{2.hor}\cdot y_{EH1.2} + EH2_{2.hor}\cdot y_{EH2.2} + EH3_{2.hor}\cdot y_{EH3.2}\right) + 1.75LS_{hor.2}\cdot y_{LS.hor.2} = 32.83\cdot\frac{kip\cdot ft}{ft}$$

$$Check_{OT.2} := \begin{cases} \text{"OK"} & \text{if } \dfrac{Resisting_2}{Driving_2} \geq 1 \\ \text{"NG"} & \text{otherwise} \end{cases} = \text{"OK"}$$

Eccentricity of Resultant

$$\begin{aligned} \Sigma V_{e.2} := {} & 0.9\left(DC_{wall.2} + DC_{anchor.2}\right) + 1.0\cdot 0.8\cdot\left(EV1a_2 + EV1b_2 + EV2_2 + EV3_2 + EV4_2\right) \ldots \\ & + 1.50\left(EH1_{2.vert} + EH2_{2.vert} + EH3_{2.vert}\right) \end{aligned} = 14.146\cdot\frac{kip}{ft}$$

$$l_2 := \frac{\left[\Sigma V_{e.2}\cdot\left[\frac{\left(Resisting_2 - Driving_2\right)}{\Sigma V_{e.2}} + \frac{1}{2}\left(t_{ftg} - t_{wall}\right)\right] + 0.9DC_{ftg.2}\cdot x_{DC.ftg.2}\right]}{\Sigma V_{e.2} + 0.9DC_{ftg.2}} = 2.821\,ft$$

(Distance to resultant from face of ftg)

$$B_2 := B_{bot.lower.2} + t_{wall} + \frac{1}{2}\left(t_{ftg} - t_{wall}\right) = 7.007\,ft$$

$$e_2 := \max\left(\frac{B_2}{2} - l_2, 0ft\right) = 0.683\,ft$$

$$e_{allow.2} := \frac{B_2}{4} = 1.752\,ft$$

(Within Middle Half of ftg per AASHTO 11.6.3.3)

$$Check_{e.2} := \begin{cases} \text{"OK"} & \text{if } \dfrac{e_2}{e_{allow.2}} \le 1 \\ \text{"NG"} & \text{otherwise} \end{cases} = \text{"OK"}$$

Check Bearing Pressure

Per 11.11.4.3 Evaluate bearing pressure with respect to resistance calculated in 10.6.3. Per HITEC p. D24, use the horizontal portion of the anchor at its base plus the footing width. Evaluate at the strength limit state. Use 100% of the weight of the retained soil. When Live Load Surcharge is present, Strength I with maximum load factors for vertical loads and horizontal loads controls. Include the effects of live load surcharge. Since lever arms are calculated from the front face of the wall, must add to the eccentricity the distance between wall and toe of footing.

$$\begin{aligned} Resisting_{brg.2} := {} & 1.25\left(DC_{wall.2}\cdot x_{DC.wall.2} + DC_{anchor.2}\cdot x_{anchor.2}\right) \ldots \\ & + 1.35\cdot\left(EV1a_2\cdot x_{EV1a.2} + EV1b_2\cdot x_{EV1b.2} + EV2_2\cdot x_{EV2.2} + EV3_2\cdot x_{EV3.2} + EV4_2\cdot x_{EV4.2}\right) \ldots \\ & + 1.35\left(EH1_{2.vert}\cdot x_{EH1.2} + EH2_{2.vert}\cdot x_{EH2.2} + EH3_{2.vert}\cdot x_{EH3.2}\right) \ldots \\ & + 1.75\cdot\left(LS_{vert.2}\cdot x_{LS.vert.2}\right) \end{aligned} = 106.365\cdot\frac{kip\cdot ft}{ft}$$

$$Driving_{brg.2} := 1.35\left(EH1_{2.hor}\cdot y_{EH1.2} + EH2_{2.hor}\cdot y_{EH2.2} + EH3_{2.hor}\cdot y_{EH3.2}\right) + 1.75LS_{hor.2}\cdot y_{LS.hor.2} = 30.789\cdot\frac{kip\cdot ft}{ft}$$

$$\begin{aligned} \Sigma V_{brg.2} := {} & 1.25\cdot\left(DC_{wall.2} + DC_{anchor.2}\right) + 1.35\cdot\left(EV1a_2 + EV1b_2 + EV2_2 + EV3_2 + EV4_2\right) \ldots \\ & + 1.35\cdot\left(EH1_{2.vert} + EH2_{2.vert} + EH3_{2.vert}\right) + 1.75\cdot\left(LS_{vert.2}\right) \end{aligned} = 24.788\cdot\frac{kip}{ft}$$

$$l_{brg.2} := \frac{\left[\Sigma V_{brg.2}\cdot\left[\dfrac{\left(Resisting_{brg.2} - Driving_{brg.2}\right)}{\Sigma V_{brg.2}} + \dfrac{1}{2}\left(t_{ftg} - t_{wall}\right)\right] + 1.25DC_{ftg.2}\cdot x_{DC.ftg.2}\right]}{\Sigma V_{brg.2} + 1.25DC_{ftg.2}} = 3.938\,ft$$

(Distance to resultant from face of ftg)

$$e_{brg.2} := \max\left(\frac{B_2}{2} - l_{brg.2}, 0ft\right) = 0\,ft$$

$$B_2 - 2\cdot e_{brg.2} = 7.007\,ft$$

Effective footing width

$$\sigma_{foot.2} := \frac{\Sigma V_{brg.2}}{B_2 - 2\cdot e_{brg.2}} = 3.538\cdot ksf$$

Eq. 11.6.3.2-1, Rectangular Distibution for Foundations on soil

$$q_{R.2} := 0.45\cdot 14.0ksf = 6.3\cdot ksf$$

Conservatively use resistance for 6ft width

$$CheckBearing_2 := \begin{cases} \text{"OK"} & \text{if } \dfrac{q_{R.2}}{\sigma_{foot.2}} \ge 1 \\ \text{"NG"} & \text{otherwise} \end{cases} = \text{"OK"}$$

External Stability Analysis at Anchor 3

Calculate Vertical Loads and Associated Lever Arms ***(All Lever Arms are from Point "O")***

$$DC_{wall.3} := t_{wall} \cdot h_{wall.3} \cdot \gamma_c = 2.096 \cdot \frac{kip}{ft}$$

$$x_{DC.wall.3} := \frac{1}{2} t_{wall} = 0.5\,ft$$

$$EV1a_3 := \frac{1}{2} \gamma_s \cdot \left(h_{backfill.3} - h_{wall.3}\right) \cdot \left(d_{slope.3}\right) = 0 \cdot \frac{kip}{ft}$$

$$x_{EV1a.3} := t_{wall} + \frac{2}{3} d_{slope.3} = 1\,ft$$

$$EV1b_3 := \gamma_s \cdot \left(h_{backfill.3} - h_{wall.3}\right) \cdot \left(B_{bot.3} - d_{slope.3}\right) = 0 \cdot \frac{kip}{ft}$$

$$x_{EV1b.3} := t_{wall} + d_{slope.3} + \frac{1}{2}\left(B_{bot.3} - d_{slope.3}\right) = 4.561\,ft$$

$$EV2_3 := \gamma_s \cdot \left(h_{wall.3} - 3.5ft\right) \cdot B_{bot.3} = 10.445 \cdot \frac{kip}{ft}$$

$$x_{EV2.3} := t_{wall} + \frac{1}{2} B_{bot.3} = 4.561\,ft$$

$$EV3_3 := \gamma_s \cdot (3.5ft) \cdot \left(B_{bot.lower.3} - \frac{7in}{\cos(30deg)}\right) = 2.123 \cdot \frac{kip}{ft}$$

$$x_{EV3.3} := t_{wall} + \frac{1}{2}\left(B_{bot.lower.3} - \frac{7in}{\cos(30deg)}\right) = 3.167\,ft$$

$$EV4_3 := \gamma_s \cdot \frac{1}{2} \cdot 3.5ft \cdot \left[\left(W_3 + 3ft + 5.375in\right) - \left(B_{bot.lower.3} - \frac{7in}{\cos(30deg)}\right)\right] = 0.518 \cdot \frac{kip}{ft}$$

$$x_{EV4.3} := t_{wall} + B_{bot.lower.3} + \frac{1}{3} \cdot \left[W_3 + 3ft + 5.375in - \left(B_{bot.lower.3} - \frac{7in}{\cos(30deg)}\right)\right] = 6.712\,ft$$

$$DC_{anchor.3} := \frac{1}{trib_3} \cdot \begin{cases} (1740lbf) & \text{if } AnchorType_3 = \text{"B"} \\ (2010lbf) & \text{if } AnchorType_3 = \text{"C"} \\ (2285lbf) & \text{if } AnchorType_3 = \text{"D"} \\ (2550lbf) & \text{if } AnchorType_3 = \text{"E"} \end{cases} = 0.637 \cdot \frac{kip}{ft}$$

(See Anchor Geometry Drawing)

$$x_{anchor.3} := t_{wall} + \begin{cases} (2ft + 2.25in) & \text{if } AnchorType_3 = \text{"B"} \\ (2ft + 8.8125in) & \text{if } AnchorType_3 = \text{"C"} \\ (3ft + 5.125in) & \text{if } AnchorType_3 = \text{"D"} \\ (4ft + 0.0625in) & \text{if } AnchorType_3 = \text{"E"} \end{cases} = 5.005 \cdot ft$$

$$LS_{vert.3} := \begin{cases} \left[q_{sur} \cdot \left[B_{bot.3} - \left(d_{traffic.3}\right)\right]\right] & \text{if } d_{traffic.3} < B_{bot.3} \\ 0 & \text{otherwise} \end{cases} = 1.434 \cdot \frac{kip}{ft}$$

Used in bearing calcs only

$$x_{LS.vert.3} := t_{wall} + d_{traffic.3} + \frac{1}{2}\left(B_{bot.3} - d_{traffic.3}\right) = 5.561\,ft$$

$$DC_{ftg.3} := \gamma_c \cdot t_{ftg} \cdot h_{ftg} = 0.9 \cdot \frac{kip}{ft}$$

$$x_{DC.ftg.3} := \frac{t_{ftg}}{2} = 1.5\,ft$$

Note: This moment arm is measured from the front toe of the ftg since it is only used in bearing calculations.

Calculate Lateral Loads and Associated Lever Arms

$$EH1_{3.vert} := \frac{1}{2} k_{a.wall} \cdot \gamma_s \cdot \left(h_{backfill.3} - 3.5ft\right)^2 \cdot \sin\left(\delta_{wall}\right) = 0.841 \cdot \frac{kip}{ft}$$

$$EH1_{3.hor} := \frac{1}{2} k_{a.wall} \cdot \gamma_s \cdot \left(h_{backfill.3} - 3.5ft\right)^2 \cdot \cos\left(\delta_{wall}\right) = 1.763 \cdot \frac{kip}{ft}$$

$$x_{EH1.3} := t_{wall} + B_{bot.3} = 8.121\,ft$$

$$y_{EH1.3} := 3.5ft + \frac{1}{3}\left(h_{backfill.3} - 3.5ft\right) = 6.992\,ft$$

$$EH2_{3.vert} := k_{a.anchor} \cdot \gamma_s \cdot \left(h_{backfill.3} - 3.5ft\right) \cdot (4ft) \cdot \sin\left(\delta_{anchor} - 30deg\right) = -0.118 \cdot \frac{kip}{ft}$$

$$EH2_{3.hor} := k_{a.anchor} \cdot \gamma_s \cdot \left(h_{backfill.3} - 3.5ft\right) \cdot (4ft) \cdot \cos\left(\delta_{anchor} - 30deg\right) = 0.51 \cdot \frac{kip}{ft}$$

$$x_{EH2.3} := t_{wall} + \frac{1}{2}\left(B_{bot.3} + B_{bot.lower.3}\right) = 7.064\,ft$$

$$y_{EH2.3} := 3.5ft - \frac{1}{2} \cdot 4ft = 1.5\,ft$$

$$EH3_{3.vert} := \frac{1}{2} k_{a.anchor} \cdot \gamma_s \cdot (4ft)^2 \cdot \sin\left(\delta_{anchor} - 30deg\right) = -0.022 \cdot \frac{kip}{ft}$$

$$EH3_{3.hor} := \frac{1}{2} k_{a.anchor} \cdot \gamma_s \cdot (4ft)^2 \cdot \cos\left(\delta_{anchor} - 30deg\right) = 0.097 \cdot \frac{kip}{ft}$$

$$x_{EH3.3} := t_{wall} + B_{bot.lower.3} + \left(3.5ft - \frac{2}{3}\cdot 4ft\right)\tan(30deg) = 6.488\,ft$$

$$y_{EH3.3} := 3.5ft - \frac{2}{3}\cdot 4ft = 10\cdot in$$

$$LS_{hor.3} := \begin{cases} \left(k_{a.wall}\cdot q_{sur}\cdot h_{backfill.3}\right)\cdot\cos\left(\delta_{wall}\right) & \text{if } d_{traffic.3} < B_{bot.3} + \frac{h_{wall.3}}{2} \\ 0 & \text{otherwise} \end{cases} = 0.898\cdot\frac{kip}{ft}$$

$$x_{LS.hor.3} := t_{wall} + \frac{1}{2}\left(B_{bot.lower.3} + B_{bot.3}\right) = 7.064\,ft$$ (Assumed for ease of calculation)

$$y_{LS.hor.3} := \frac{1}{2}h_{backfill.3} = 6.988\,ft$$

Check Sliding

Per AASHTO 11.11.4.2, Sliding shall be evaluated according to 10.6.3.4. Per 11.5.3, sliding shall be evaluated at the strength limit state. Use minimum load factors for vertical loads and maximum load factors for horizontal loads. Assume the failure plane is beneath the wall ftg, which will be grouted to the wall during construction. This is consistent with assumptions in the HITEC report (page D24).

Resisting Forces

$$\phi_{\tau} := 0.9$$ AASHTO Table 10.5.5.2.2-1, "Precast on Sand" or "Soil on Soil"

$$\Sigma V_3 := 0.9\left(DC_{wall.3} + DC_{anchor.3} + DC_{ftg.3}\right) + 1.0\cdot\left(EV1a_3 + EV1b_3 + EV2_3 + EV3_3 + EV4_3\right) \ldots + \eta_i\cdot 1.50\cdot\left(EH1_{3.vert} + EH2_{3.vert} + EH3_{3.vert}\right) = 17.408\cdot\frac{kip}{ft}$$

$$R_{\tau.3} := 0.8\cdot\tan\left(\phi_{ftg}\right)\cdot\Sigma V_3 = 9.752\cdot\frac{kip}{ft}$$ AASHTO 10.6.3.4

$$\boxed{R_{r.3} := \phi_{\tau}\cdot R_{\tau.3} = 8.776\cdot\frac{kip}{ft}}$$

Driving Forces

$$\Sigma H_{\tau.3} := \eta_i\cdot\left[1.50\cdot\left(EH1_{3.hor} + EH2_{3.hor} + EH3_{3.hor}\right) + 1.75LS_{hor.3}\right] = 5.126\cdot\frac{kip}{ft}$$

$$Check_{sliding.3} := \begin{cases} \text{"OK"} & \text{if } \dfrac{R_{r.3}}{\Sigma H_{\tau.3}} \geq 1 \\ \text{"NG"} & \text{otherwise} \end{cases} = \text{"OK"}$$

Check Overturning and Eccentricity

Per AASHTO 11.11.4.4, Overturning shall be evaluated according to 11.6.3.3. A maximum of 80% of the retained soil shall be used to resist overturning. Per 11.6.3.3, evaluate overturning and eccentricity at the strength limit state using maximum load factors for horizontal loads and minimum load factors for vertical loads. First, evaluate overturning about front base of wall. If the wall passes the overturning check, the wing will not experience uplift with respect to the footing. Therefore evaluate eccentricity at the bottom of the footing. The location of the resultant of the reaction forces shall be located within the middle half of the base width (footing width plus anchor projection). Eccentricity is measured from the center of the base width toward the stream side of the footing. Assume that a negative eccentricity (beyond the center of the base, toward the backfill) is acceptable since this condition will engage passive earth pressures.

Resisting Forces

$$\begin{aligned} Resisting_3 := {} & 0.9\left(DC_{wall.3}\cdot x_{DC.wall.3} + DC_{anchor.3}\cdot x_{anchor.3}\right) \ldots \\ & + 1.0\cdot 0.8\cdot\left(EV1a_3\cdot x_{EV1a.3} + EV1b_3\cdot x_{EV1b.3} + EV2_3\cdot x_{EV2.3} + EV3_3\cdot x_{EV3.3} + EV4_3\cdot x_{EV4.3}\right) \ldots \\ & + 1.50\left(EH1_{3.vert}\cdot x_{EH1.3} + EH2_{3.vert}\cdot x_{EH2.3} + EH3_{3.vert}\cdot x_{EH3.3}\right) \end{aligned} = 58.865\cdot\frac{kip\cdot ft}{ft}$$

Driving Forces

$$Driving_3 := 1.50\cdot\left(EH1_{3.hor}\cdot y_{EH1.3} + EH2_{3.hor}\cdot y_{EH2.3} + EH3_{3.hor}\cdot y_{EH3.3}\right) + 1.75LS_{hor.3}\cdot y_{LS.hor.3} = 30.742\cdot\frac{kip\cdot ft}{ft}$$

$$Check_{OT.3} := \begin{cases} \text{"OK"} & \text{if } \dfrac{Resisting_3}{Driving_3} \geq 1 \\ \text{"NG"} & \text{otherwise} \end{cases} = \text{"OK"}$$

Eccentricity of Resultant

$$\begin{aligned} \Sigma V_{e.3} := {} & 0.9\left(DC_{wall.3} + DC_{anchor.3}\right) + 1.0\cdot 0.8\cdot\left(EV1a_3 + EV1b_3 + EV2_3 + EV3_3 + EV4_3\right) \ldots \\ & + 1.50\left(EH1_{3.vert} + EH2_{3.vert} + EH3_{3.vert}\right) \end{aligned} = 13.981\cdot\frac{kip}{ft}$$

$$l_3 := \frac{\left[\Sigma V_{e.3}\cdot\left[\dfrac{\left(Resisting_3 - Driving_3\right)}{\Sigma V_{e.3}} + \dfrac{1}{2}\left(t_{ftg} - t_{wall}\right)\right] + 0.9DC_{ftg.3}\cdot x_{DC.ftg.3}\right]}{\Sigma V_{e.3} + 0.9DC_{ftg.3}} = 2.929\,ft$$

(Distance to resultant from face of ftg)

$$B_3 := B_{bot.lower.3} + t_{wall} + \frac{1}{2}\left(t_{ftg} - t_{wall}\right) = 7.007\,ft$$

$$e_3 := \max\left(\frac{B_3}{2} - l_3, 0ft\right) = 0.575\,ft$$

$$e_{allow.3} := \frac{B_3}{4} = 1.752\,ft$$

(Within Middle Half of ftg per AASHTO 11.6.3.3)

$$Check_{e.3} := \begin{cases} \text{"OK"} & \text{if } \frac{e_3}{e_{allow.3}} \le 1 \\ \text{"NG"} & \text{otherwise} \end{cases} = \text{"OK"}$$

Check Bearing Pressure

Per 11.11.4.3 Evaluate bearing pressure with respect to resistance calculated in 10.6.3. Per HITEC p. D24, use the horizontal portion of the anchor at its base plus the footing width. Evaluate at the strength limit state. Use 100% of the weight of the retained soil. When Live Load Surcharge is present, Strength I with maximum load factors for vertical loads and horizontal loads controls. Include the effects of live load surcharge. Since lever arms are calculated from the front face of the wall, must add to the eccentricity the distance between wall and toe of footing.

$$\begin{aligned} Resisting_{brg.3} := {} & 1.25\left(DC_{wall.3}\cdot x_{DC.wall.3} + DC_{anchor.3}\cdot x_{anchor.3}\right) \ldots \\ & + 1.35\cdot\left(EV1a_3\cdot x_{EV1a.3} + EV1b_3\cdot x_{EV1b.3} + EV2_3\cdot x_{EV2.3} + EV3_3\cdot x_{EV3.3} + EV4_3\cdot x_{EV4.3}\right) \ldots \\ & + 1.35\left(EH1_{3.vert}\cdot x_{EH1.3} + EH2_{3.vert}\cdot x_{EH2.3} + EH3_{3.vert}\cdot x_{EH3.3}\right) \ldots \\ & + 1.75\cdot\left(LS_{vert.3}\cdot x_{LS.vert.3}\right) \end{aligned} = 105.237\cdot\frac{kip\cdot ft}{ft}$$

$$Driving_{brg.3} := 1.35\left(EH1_{3.hor}\cdot y_{EH1.3} + EH2_{3.hor}\cdot y_{EH2.3} + EH3_{3.hor}\cdot y_{EH3.3}\right) + 1.75LS_{hor.3}\cdot y_{LS.hor.3} = 28.766\cdot\frac{kip\cdot ft}{ft}$$

$$\begin{aligned} \Sigma V_{brg.3} := {} & 1.25\cdot\left(DC_{wall.3} + DC_{anchor.3}\right) + 1.35\cdot\left(EV1a_3 + EV1b_3 + EV2_3 + EV3_3 + EV4_3\right) \ldots \\ & + 1.35\cdot\left(EH1_{3.vert} + EH2_{3.vert} + EH3_{3.vert}\right) + 1.75\cdot\left(LS_{vert.3}\right) \end{aligned} = 24.54\cdot\frac{kip}{ft}$$

$$l_{brg.3} := \frac{\left[\Sigma V_{brg.3}\cdot\left[\frac{\left(Resisting_{brg.3} - Driving_{brg.3}\right)}{\Sigma V_{brg.3}} + \frac{1}{2}\left(t_{ftg} - t_{wall}\right)\right] + 1.25DC_{ftg.3}\cdot x_{DC.ftg.3}\right]}{\Sigma V_{brg.3} + 1.25DC_{ftg.3}} = 4.002\,ft$$

(Distance to resultant from face of ftg)

$$e_{brg.3} := \max\left(\frac{B_3}{2} - l_{brg.3}, 0ft\right) = 0\,ft$$

$$\sigma_{foot.3} := \frac{\Sigma V_{brg.3}}{B_3 - 2\cdot e_{brg.3}} = 3.502\cdot ksf$$

Eq. 11.6.3.2-1, Rectangular Distibution for Foundations on soil

$$q_{R.3} := 0.45\cdot 14.0ksf = 6.3\cdot ksf$$

Conservatively use resistance for 6ft width

$$CheckBearing_3 := \begin{cases} \text{"OK"} & \text{if } \frac{q_{R.3}}{\sigma_{foot.3}} \ge 1 \\ \text{"NG"} & \text{otherwise} \end{cases} = \text{"OK"}$$

Check Wall Reinforcement

Assume the wall stem is cantilevered above the anchor. Use tallest wall section above anchor. Use maximum horizontal load factors to calculate moments and shears. Use minimum load factor for axial compression.

Calculate Horizontal Loads and resp. Lever Arms at top of Anchor

$h_{wall.internal} := h_{wall.1} - 3.5ft = 10.762\,ft$

$EH_{wall} := \frac{1}{2} k_{a.wall} \cdot \gamma_s \cdot h_{wall.internal}^2 = 2.061 \cdot \frac{kip}{ft}$ $\qquad y_{EH.wall} := \frac{1}{3} h_{wall.internal} = 3.587\,ft$

$LS_{wall} := \begin{cases} 0 & \text{if } d_{traffic.1} \geq \frac{1}{2} \cdot h_{wall.1} \\ \left(k_{a.wall} \cdot q_{sur} \cdot h_{wall.internal}\right) & \text{otherwise} \end{cases} = 0.766 \cdot \frac{kip}{ft}$ $\qquad y_{LS.wall} := \frac{1}{2} h_{wall.internal} = 5.381\,ft$

$Mu_{wall} := \eta_i \cdot \left(1.5 \cdot EH_{wall} \cdot y_{EH.wall} + 1.75 LS_{wall} \cdot y_{LS.wall}\right) = 18.307 \cdot \frac{kip \cdot ft}{ft}$

$Vu_{wall} := \eta_i \cdot \left(1.5 EH_{wall} + 1.75 LS_{wall}\right) = 4.433 \cdot \frac{kip}{ft}$

$Nu_{wall} := -\eta_i \cdot \left(0.9 \cdot \gamma_c \cdot t_{wall} \cdot h_{wall.internal}\right) = -1.453 \cdot \frac{kip}{ft}$

Check Moment Capacity

$bar_{wall} := 6$ $\qquad s_{wall} := 7in$ $\qquad cover_{wall} := 2in$

$b_w := 1ft$

$diam_{wall} := \frac{bar_{wall}}{8} in = 0.75 \cdot in$

$As_{wall} := \frac{\pi \cdot diam_{wall}^2}{4} \cdot 12 \frac{in}{s_{wall}} = 0.757 \cdot in^2$

$d_{wall} := t_{wall} - cover_{wall} - \frac{diam_{wall}}{2} = 9.625 \cdot in$

$\phi_{moment} := 0.90$ $\qquad$ Per AASHTO 5.5.4.2.1

$\phi_{shear} := 0.90$ $\qquad$ Per AASHTO 5.5.4.2.1

Verify that f_y can be substituted for f_s in the equations of 5.7.3.2. This is allowed when $\frac{c}{d_s} \le 0.60$.

$c_{wall} := \frac{As_{wall} \cdot f_y}{0.85 \cdot f_c \cdot \beta_1 \cdot b_w} = 1.114 \cdot in$ Simplified equation 5.7.3.1.2-4

$\frac{c_{wall}}{d_{wall}} = 0.116$ **This is less than 0.60 therefore f_y can be substituted for f_s**

$a_{wall} := \beta_1 \cdot c_{wall} = 0.891 \cdot in$

$Mn_{wall} := As_{wall} \cdot f_y \cdot \left(d_{wall} - \frac{a_{wall}}{2} \right)$

$Mr_{wall} := \phi_{moment} \cdot Mn_{wall} = 31.284 \cdot kip \cdot ft$

$Mu_{wall} \cdot b_w = 18.307 \cdot kip \cdot ft$

$$Check_{WallFlexure} := \begin{cases} \text{"OK"} & \text{if } \frac{Mr_{wall}}{Mu_{wall} \cdot b_w} \ge 1 \\ \text{"NG"} & \text{otherwise} \end{cases} = \text{"OK"}$$

Check Minimum Flexural Reinforcement (5.7.3.3.2)

$f_r := 0.24 \cdot \sqrt{f_c \cdot ksi} = 0.537 \cdot ksi$ AASHTO 5.4.2.6

$I_{g.wall} := \frac{1}{12} \cdot b_w \cdot t_{wall}^3 = 1.728 \times 10^3 \cdot in^4$

$y_{t.wall} := \frac{t_{wall}}{2} = 6 \cdot in$ Distance from centroid to extreme tension fibers. Conservatively ignore reinforcement.

$S_{c.wall} := \frac{I_{g.wall}}{y_{t.wall}} = 288 \cdot in^3$

$\gamma_3 := 0.67$ 0.67 = Factor for Grade 60 ASTM A615 rebar

$\gamma_1 := 1.2$ 1.2 = Factor for precast segmental structures

$M_{cr.wall} := \gamma_3 \cdot \gamma_1 \cdot S_{c.wall} \cdot f_r = 10.355 \cdot kip \cdot ft$ Simplified AASHTO Eq 5.7.3.3.2-1

$1.33 Mu_{wall} \cdot b_w = 24.348 \cdot kip \cdot ft$

$$Check_{MinSteelWall} := \begin{cases} \text{"OK"} & \text{if } Mr_{wall} \ge \min\left(1.33 Mu_{wall} \cdot b_w, M_{cr.wall}\right) \\ \text{"NG"} & \text{otherwise} \end{cases} = \text{"OK"}$$

Shear Resistance at Bottom of Wall (Section 5.8.3.4.2)

The section contains less than the minimum transverse reinforcement specified in 5.8.2.5, therefore use equation 5.8.3.4.2-2 to determine the longitudinal strain effect factor (β) at the location of maximum shear.

$Mu := \max(Mu_{wall}, Vu_{wall} \cdot d_{wall})$

In the eqtn below Mu shall not be less than $Vu \cdot d_v$

$$\xi_{s_wall} := \frac{\frac{|Mu|}{d_{wall}} + 0.5Nu_{wall} + |Vu_{wall}|}{E_s \cdot As_{wall}} \cdot b_w \qquad 1000 \cdot \xi_{s_wall} = 1.21 \qquad (5.8.3.4.2\text{-}4)$$

$s_{x_wall} := d_{wall}$

$$s_{xe_wall} := s_{x_wall} \cdot \frac{1.38in}{Aggregate_{diam} + 0.63in} = 9.625 \cdot in \qquad (5.8.3.4.2\text{-}5)$$

$$\beta_{wall} := \left(\frac{4.8}{1 + 750 \cdot \xi_{s_wall}}\right) \cdot \left(\frac{51}{39 + \frac{s_{xe_wall}}{1in}}\right) = 2.641 \qquad (5.8.3.4.2\text{-}2)$$

$$\Theta_{wall} := 29deg + 3500deg \cdot \xi_{s_wall} = 33.228 \cdot deg \qquad (5.8.3.4.2\text{-}3)$$

$$Vn_{wall} := \min\left(0.25 \cdot f_c \cdot b_w \cdot d_{wall}, 0.0316 \cdot \beta_{wall} \cdot \sqrt{f_c \cdot ksi} \cdot b_w \cdot d_{wall}\right) = 21.557 \cdot kip \qquad (5.8.3.3)$$

$Vr_{wall} := \phi_{shear} \cdot Vn_{wall} = 19.401 \cdot kip$

$Vu_{wall} \cdot b_w = 4.433 \cdot kip$

$$Check_{WallShear} := \begin{cases} \text{"OK"} & \text{if } \frac{Vr_{wall}}{Vu_{wall} \cdot b_w} \geq 1 \\ \text{"NG"} & \text{otherwise} \end{cases} = \text{"OK"}$$

Check Crack Control in Section 5.7.3.4

$$Ms_{wall} := \eta_i \cdot \left(1.0 \cdot EH_{wall} \cdot y_{EH.wall} + 1.0LS_{wall} \cdot y_{LS.wall}\right) = 11.517 \cdot \frac{kip \cdot ft}{ft}$$

$$Ns_{wall} := -\eta_i \cdot \left(1.0 \cdot \gamma_c \cdot t_{wall} \cdot h_{wall.internal}\right) = -1.614 \cdot \frac{kip}{ft}$$

$$e_{wall} := \max\left[\left(\frac{Ms_{wall}}{Ns_{wall}} + d_{wall} - \frac{t_{wall}}{2}\right), 1.15 \cdot d_{wall}\right] = 0.922\,ft$$

$$j_{wall} := \min\left[\left[0.74 + .1 \cdot \left(\frac{e_{wall}}{d_{wall}}\right)\right], 0.9\right] = 0.855$$

$$i_{wall} := \frac{1}{1 - \left(j_{wall} \cdot \frac{d_{wall}}{e_{wall}}\right)} = 3.898$$

$$fss_{wall} := \frac{Ms_{wall} + Ns_{wall} \cdot \left(d_{wall} - \frac{t_{wall}}{2}\right)}{As_{wall} \cdot j_{wall} \cdot i_{wall} \cdot d_{wall}} = 5.448 \cdot \frac{ksi}{ft}$$

Stress in Reinforcement at Service Limit State

$$d_{c_wall} := t_{wall} - d_{wall} = 2.375 \cdot in$$

$$\beta_s := 1 + \frac{d_{c_wall}}{0.7 \cdot \left(t_{wall} - d_{c_wall}\right)} = 1.353$$

$$\gamma_e := 1.00$$

exposure factor

$$s_{max} := \frac{700\,\frac{kip}{in} \cdot \gamma_e}{\beta_s \cdot fss_{wall} \cdot b_w} - 2 \cdot d_{c_wall} = 90.256 \cdot in$$

$$Check_{MaxSpacing} := \begin{cases} \text{"OK"} & \text{if } s_{wall} \le s_{max} \\ \text{"NG"} & \text{otherwise} \end{cases} = \text{"OK"}$$

Check Minimum Bar Spacing in Section 5.10.3.1.2:

$$s_{min} := \max\left(diam_{wall}, 1.33 Aggregate_{diam}, 1in\right) = 1 \cdot in$$

$$Check_{MinSpacing} := \begin{cases} \text{"OK"} & \text{if } s_{wall} \ge s_{min} \\ \text{"NG"} & \text{otherwise} \end{cases} = \text{"OK"}$$

Check Maximum Bar Spacing in Section 5.10.3.2:

$$s_{max} := \min\left(1.5 \cdot t_{wall}, 18in\right) = 18 \cdot in$$

$$Check_{MaxSpacing} := \begin{cases} \text{"OK"} & \text{if } s_{wall} \le s_{max} \\ \text{"NG"} & \text{otherwise} \end{cases} = \text{"OK"}$$

Check Anchor Attachment to Wall

Check Moment Capacity of Connection Bars

Conservatively assume the entire wall is cantilevered about the footing, therefore consider only driving moments. Use total loads instead of loads per foot. Use 100% of soil weight. Must determine controlling anchor, since tributary width is variable, not necessarily the anchor at the tallest wall. Assume only top four connection bars resist tension. This assumption is consistent with HITEC p.D28.

$Mu_{anchor} := \max(Driving_{brg.1} \cdot trib_1, Driving_{brg.2} \cdot trib_2, Driving_{brg.3} \cdot trib_3) = 123.154 \cdot kip \cdot ft$

$bar_{anchor} := 5$ size of bar

$diam_{anchor} := \frac{bar_{anchor}}{8} in = 0.625 \cdot in$

$As_{anchor} := \frac{\pi}{4} \cdot diam_{anchor}^2 = 0.307 \cdot in^2$

$n := 6$ Number of bars in tension

$b_{anchor} := t_{stem} = 6 \cdot in$ thickness of anchor stem

$h_{stem} := 3ft + 6in$ height of anchor stem

$d_{anchor} := 30.5in$ distance from centroid of tension reinforcement extreme compression fiber.

Verify that f_y can be substituted for f_s in the equations of 5.7.3.2. This is allowed when $\frac{c}{d_s} \le 0.60$.

$c_{anchor} := \frac{n \cdot As_{anchor} \cdot f_y}{0.85 \cdot f_c \cdot \beta_1 \cdot b_{anchor}} = 5.414 \cdot in$ Simplified equation 5.7.3.1.2-4

$\frac{c_{anchor}}{d_{anchor}} = 0.178$ **This is less than 0.60 therefore f_y can be substituted for f_s**

$a_{anchor} := \beta_1 \cdot c_{anchor} = 4.331 \cdot in$

$Mn_{anchor} := n \cdot As_{anchor} \cdot f_y \cdot \left(d_{anchor} - \frac{a_{anchor}}{2}\right)$

$Mr_{anchor} := \phi_{moment} \cdot Mn_{anchor} = 234.708 \cdot kip \cdot ft$

$Mu_{anchor} = 123.154 \cdot kip \cdot ft$

$$Check_{AnchorFlexure} := \begin{cases} \text{"OK"} & \text{if } \frac{Mr_{anchor}}{Mu_{anchor}} \ge 1 \\ \text{"NG"} & \text{otherwise} \end{cases} = \text{"OK"}$$

Check Minimum Flexural Reinforcement (5.7.3.3.2)

$f_r = 0.537 \cdot ksi$ AASHTO 5.4.2.6

$I_{g.anchor} := \frac{1}{12} \cdot t_{stem} \cdot h_{stem}^3 = 3.704 \times 10^4 \cdot in^4$

$y_{t.anchor} := \frac{h_{stem}}{2} = 1.75\,ft$ Distance from centroid to extreme tension fibers. Conservatively ignore reinforcement.

$S_{c.anchor} := \frac{I_{g.anchor}}{y_{t.anchor}} = 1.764 \times 10^3 \cdot in^3$

$\gamma_3 := 0.67$ 0.67 = Factor for Grade 60 ASTM A615 rebar

$\gamma_1 := 1.2$ 1.2 = Factor for precast segmental structures

$M_{cr.anchor} := \gamma_3 \cdot \gamma_1 \cdot S_{c.anchor} \cdot f_r = 63.426 \cdot kip \cdot ft$ Simplified AASHTO Eq 5.7.3.3.2-1

$1.33Mu_{anchor} \cdot b_w = 163.795\,ft \cdot kip \cdot ft$

$$Check_{MinSteelAnchor} := \begin{cases} \text{"OK"} & \text{if } Mr_{anchor} \geq \min(1.33Mu_{anchor}, M_{cr.anchor}) \\ \text{"NG"} & \text{otherwise} \end{cases} = \text{"OK"}$$

Check Minimum Steel for Temperature and Shrinkage (11.6.1.5.1 & 5.10.8)

$$As_{min.anchor} := \max\left[0.11\frac{in^2}{ft}, \min\left[0.60\frac{in^2}{ft}, \frac{1.30 \cdot b_{anchor} \cdot h_{stem}}{2 \cdot (b_{anchor} + h_{stem}) \cdot \frac{f_y}{ksi}}\right]\right] = 0.6 \cdot \frac{in^2}{ft}$$

$As_{min.anchor} \cdot h_{stem} = 2.1 \cdot in^2$

$As_{anchor} \cdot (n + 2) = 2.454 \cdot in^2$ Account for extra two bars in compression face

Check Hook Development of Connection Steel in Wall

Per 5.10.2, A standard hook with a 180 degree bend shall have a 4*db extension, but not less than 2.5 inches. Per 5.12.3, Cover beyond free end of bar shall be 2 inches.

$$l_{hb} := \frac{38.0 diam_{anchor}}{\sqrt{\left(\frac{f_c}{ksi}\right)}} = 10.621 \cdot in$$

Basic development length for a Grade 60 bar with a standard hook (AASHTO 5.11.2.4.1)

Modification Factors to be applied to the Basic Development Length (AASHTO 5.11.2.4.2)

$M_{strength} := 1$ — Increase by fy/60 for yield strength greater than 60ksi

$M_{cover} := 0.7$ — 0.7 if side cover normal to plane of hook is at least 2.5 inches AND Cover beyond hook is at least 2.0in

$M_{stirrups} := 1.0$ — 0.8 if hook is enclose in with ties or stirrups as specified in 5.11.2.4.2

$M_{As} := 1.0$ — Conservatively assume entire area of steel provided is required.

$M_{lightweight} := 1.0$ — 1.3 if lightweight concrete is used.

$M_{epoxy} := 1.0$ — 1.2 if epoxy rebar is used.

$$M := M_{strength} \cdot M_{cover} \cdot M_{stirrups} \cdot M_{As} \cdot M_{lightweight} \cdot M_{epoxy} = 0.7$$

$$l_{dh} := \max(6in, 8 \cdot diam_{anchor}, M \cdot l_{hb}) = 7.435 \cdot in$$

$$t_{wall.min} := cover_{wall} + l_{dh} = 9.435 \cdot in$$

$$Check_{Wall.Thickness} := \begin{cases} \text{"OK"} & \text{if } t_{wall} \geq t_{wall.min} \\ \text{"NG"} & \text{otherwise} \end{cases} = \text{"OK"}$$

Design/Analysis References:

1. AASHTO LRFD Bridge Design Specifications, 2012.
2. VTrans 2011 Standard Specifications for Road and Bridge Construction.
3. Das, Principles of Foundation Engineering, 5th Edition.
4. Holtz & Kovacs, Introduction to Geotechnical Engineering
5. AISC, Steel Construction Manual, 13th Edition
6. Highway Innovative Technology Evaluation Center (HITEC), Evaluation of the Con/Span Wingwall System, CERF Report #40580, July 2001.
7. Contract Plans, "Project Number ER-BRF 015-1(23), Fire Drive Box Culvert, Jamaica VT" by VT AOT, Dated 12/5/2012, Email from VT AOT (5/23/2013) clarifying bearing capacity.

Assumptions:

1. It is assumed that the failure plane of the soil to be retained by this wall will lie within the proposed backfill material.
2. The proposed backfill material will meet the material requirements of the contract documents. This material is assumed to have a friction angle = 34 degrees and a dry unit weight = 140 pcf.
3. The installation of the weepholes combined with free draining backfill will preclude the development of hydrostatic pressures on the wall.
4. Passive earth pressure in front of the wall is ignored per AASHTO 11.6.3.5.
5. Site Layout. The 16x8 Box Culvert carries Fire Drive over unknown brook. All four wingwalls have varying skew. Wingwall 4C is closest to traffic. Wingwall 2B is tallest. Check both wings. Also Check WW3 with 3 anchors.
6. Backslope Angle. All 4 wings have a +- flat backslope.
7. Live Load Surcharge. Vehicular Surcharge is applied when traffic can come within a distance of half the height of the wall to the reinforced soil mass. Only WW3 and WW4 are within this distace. Assume traffic is 2 feet from face of wall and runs parallel to wall.
8. The HITEC Evaluation (page 3) explains that the Anchor Wall acts as a cantilever wall for most of its length since the weight of the soil within and above the anchors provides resistance to overturning. The wall also has attributes of a bin wall since arching and friction of soil masses between anchors provides additional resistance. Therefore, the provisions of AASHTO Sections 11.6 (Conventional Retaining Walls) and 11.11 (Modular Walls) shall be applied.
9. Per AASHTO 11.11.4.4, a maximum of 80% of the weight of the retained soil is effective in resisting overturning. The HITEC Evaluation (pages D29-D33) evaluated the accuracy of this assumption and found that using 80% of the soil weight is a conservative assumption.
10. The Top of Wingwall elevations are 2 inches below the top of headwall elevations.

General Input:

$ELV_{walltop} := 737.3ft$	Elevation of the Wingwall at its tallest point
$ELV_{walltip} := 736.8ft$	Elevation of Wingwall at its tip.
$ELV_{bot.ftg} := 719.1ft$	Elevation of the Bottom of the Wall Footing
$t_{ftg} := 3ft$	Thickness of Wall Footing
$h_{ftg} := 2ft$	Height of Wall Footing
$h_{short} := ELV_{walltip} - ELV_{bot.ftg} - h_{ftg} - 1in = 15.617\,ft$	Short end of wall (less 1" for shim)
$h_{tall} := ELV_{walltop} - ELV_{bot.ftg} - h_{ftg} - 1in = 16.117\,ft$	Tall end of wall (less 1" for shim)
$l_{wall} := 8.67ft$	Length of Wall Panel
$l_{flat} := 0ft$	Length of flat portion of wingwall before break in slope.
$t_{wall} := 12in$	Thickness of Wall Panel
$t_{stem} := 6in$	Thickness of Anchor Stem
$w_{flange} := 2ft + 6in$	Width of Anchor Flange
$\alpha_{skew} := 0deg$	Angle of ww skew in plan view, measured from edge of roadway. (to measure distance to traffic for each anchor)
$\theta_{wall} := 90deg$	Wall batter angle with horizontal
$\theta_{anchor} := \theta_{wall} + 30deg$	Anchor batter angle with horizontal
$\beta := atan\left(\frac{1}{5}\right) = 11.31 \cdot deg$	Backfill slope angle with horizontal, measured perpendicular to the wall.
$d_{traffic} := (2ft)$	Estimated minimum distance to traffic, measured from stream side of wall and perpendicular to the wall.
$BreakInSlope := 2ft$	Assumed distance from face of guardrail to break-in-slope, meaured perpendicular to the wall.

Wall Material Properties

Concrete

$f_c := 5000 \frac{lbf}{in^2}$ $E_c := 4074ksi$ $Aggregate_{diam} := .75in$

$\gamma_c := 150pcf$ Assumed unit weight of concrete panel.

β_1 = Stress Block Factor specified in Article 5.7.2.2

$$\beta_1 := \max\left[.65, \left[\begin{array}{l} .85 \quad \text{if } f_c < 4000psi \\ .85 - \frac{.05}{psi} \cdot \left(\frac{f_c - 4000psi}{1000}\right) \quad \text{otherwise} \end{array}\right]\right] = 0.8$$

Steel:

$f_y := 60000 \frac{lbf}{in^2}$ $E_s := 29000ksi$

Soil:

$q_R :=$ Factored Bearing Resistance to be determined based on effective footing width. This varies per anchor. Per Geotech Analysis, at the strength limit state:

Effective Footing Width (ft)	q_R (ksf)
4	11.8
6	14.0
8	16.2

$\gamma_s := 140pcf$ Assumed soil unit weight for all soil

$q_{sur} := 2ft \cdot \gamma_s = 280 \cdot psf$ Surcharge Soil Pressure (AASHTO Tbl 3.11.6.4-2)

$\phi_{ftg} := 35deg$ Friction Anlge of Soil below Wall Footing

$\phi_{backfill} := 34deg$ Friction Angle of Backfill Soil

$\delta_{wall} := 0.75 \cdot \phi_{backfill} = 25.5 \cdot deg$ AASHTO C3.11.5.9-1 and HITEC p.D19

$\delta_{anchor} := 0.50 \cdot \phi_{backfill} = 17 \cdot deg$ AASHTO C3.11.5.9-1 and HITEC p.D19

$$k_{a.wall} := \frac{\sin(\theta_{wall} + \phi_{backfill})^2}{\sin(\theta_{wall})^2 \cdot \sin(\theta_{wall} - \delta_{wall}) \cdot \left(1 + \sqrt{\frac{\sin(\phi_{backfill} + \delta_{wall}) \cdot \sin(\phi_{backfill} - \beta)}{\sin(\theta_{wall} - \delta_{wall}) \cdot \sin(\theta_{wall} + \beta)}}\right)^2} = 0.293$$

AASHTO 3.11.5.3

$$k_{a.anchor} := \frac{\sin(\theta_{anchor} + \phi_{backfill})^2}{\sin(\theta_{anchor})^2 \cdot \sin(\theta_{anchor} - \delta_{anchor}) \cdot \left(1 + \sqrt{\frac{\sin(\phi_{backfill} + \delta_{anchor}) \cdot \sin(\phi_{backfill} - \beta)}{\sin(\theta_{anchor} - \delta_{anchor}) \cdot \sin(\theta_{anchor} + \beta)}}\right)^2} = 0.098$$

AASHTO 3.11.5.3

$$k_0 := 1 - \sin(\phi_{backfill}) = 0.441$$

AASHTO 3.11.5.2-1

Determine Load Factors (Strength I) (AASHTO 1.3 and Table 3.4.1-1)

Load Modifiers

$\eta_D := 1.00$ Ductility for a conventional design

$\eta_R := 1.00$ Redundancy for conventional design

$\eta_I := 1.00$ Importance for a conventional bridge

$\eta_i := \max(\eta_D \cdot \eta_R \cdot \eta_I, 0.95)$ $\eta_i = 1$

Load Factor	Max	Min	Service	
γ_{DC}	1.25	0.9	1.0	Component Dead Loads
γ_{EH}	1.5	0.9	1.0	Horizontal Earth Loads
γ_{EV}	1.35	1.0	1.0	Vertical Earth Loads
γ_{LL}	1.75	1.75	1.0	Live Loads

Anchor Types, Layout and Backfill Geometry

$ConnectedToBridge := \text{"No"}$

To account for the connection of the wing to the bridge. Choose between Yes and No.

$AnchorType_1 := \text{"E"}$

$AnchorType_2 := \text{"E"}$

$AnchorType_3 := \text{"E"}$

Anchor Type to be tied to the back face of the wall. Chosen between Anchor Type B, C, D, and E as defined below.

$dist_{anchor.1} := 1ft + 10in$

$dist_{anchor.2} := 6ft + 10in$

$dist_{anchor.3} := 0$

Distance to each anchor is from culvert end of wing. Anchor 1 is closest to culvert.

Note: Research in HITEC report supports spacing from 2.5 ft (anchors are touching) to 5.5 feet (HITEC Report pages D29-D33). If distance between anchors increases beyond 5.5 ft, data supporting the usable 80% soil weight assumption shall be provided due to possible affects on soil arching between the anchors. Similarly, anchor closest to the wall tip shall not exceed 3 feet without supporting data.

If only 1 anchor is used, set $dist_{anchor2} = dist_{anchor3} = 0$.

If only 2 anchors are used, set $dist_{anchor3} = 0$.

Tributary Width of Wall for each Anchor

$$trib_{plates} := \begin{cases} 0 & \text{if } ConnectedToBridge = \text{"No"} \\ \frac{1}{2} \cdot dist_{anchor.1} & \text{otherwise} \end{cases} = 0\,ft$$

$$trib_1 := \begin{cases} l_{wall} - trib_{plates} & \text{if } dist_{anchor.2} = 0 \\ \frac{1}{2} \cdot \left(dist_{anchor.1} + dist_{anchor.2}\right) - trib_{plates} & \text{otherwise} \end{cases} = 4.333\,ft$$

$$trib_2 := \begin{cases} \left[l_{wall} - \frac{1}{2}\left(dist_{anchor.1} + dist_{anchor.2}\right)\right] & \text{if } dist_{anchor.3} = 0 \\ \frac{1}{2}\left(dist_{anchor.2} + dist_{anchor.3}\right) - \frac{1}{2}\left(dist_{anchor.1} + dist_{anchor.2}\right) & \text{otherwise} \end{cases} = 4.337\,ft$$

$$trib_3 := l_{wall} - \left(trib_1 + trib_2 + trib_{plates}\right) = 0\,ft$$

Height of Wall at CL of Each Anchor

$$h(x) := \begin{cases} 0 & \text{if } x = 0 \\ h_{tall} & \text{if } 0 < x \le l_{flat} \\ \left[h_{tall} - \left(\frac{h_{tall} - h_{short}}{l_{wall} - l_{flat}}\right)\cdot\left(x - l_{flat}\right)\right] & \text{otherwise} \end{cases}$$

$h_{wall.1} := h\left(dist_{anchor.1}\right) = 16.011\,ft$

$h_{wall.2} := h\left(dist_{anchor.2}\right) = 15.723\,ft$

$h_{wall.3} := h\left(dist_{anchor.3}\right) = 0\,ft$

Height of wall at each anchor

Length of each Anchor Stem Extension

$$W(x) := \begin{cases} (0ft) & \text{if } x = \text{"B"} \\ (1ft) & \text{if } x = \text{"C"} \\ (2ft) & \text{if } x = \text{"D"} \\ (3ft) & \text{if } x = \text{"E"} \end{cases}$$

$W_1 := W\left(AnchorType_1\right) = 3\,ft$

$W_2 := W\left(AnchorType_2\right) = 3\,ft$

$W_3 := W\left(AnchorType_3\right) = 3\,ft$

Width of Soil Column above each Anchor

B_{bot} is the width of the soil column at the top of the anchor, measured from backfill side of wall to upper tip of each anchor.

$$B_{bot.1} := W_1 + (3ft + 5.375in) + \frac{7in}{\cos(30deg)} = 7.121\,ft$$

$$B_{bot.2} := W_2 + (3ft + 5.375in) + \frac{7in}{\cos(30deg)} = 7.121\,ft$$

$$B_{bot.3} := W_3 + (3ft + 5.375in) + \frac{7in}{\cos(30deg)} = 7.121\,ft$$

$B_{bot.lower}$ is the width of the soil column at the bottom of the anchor, measured from backfill side of wall to bottom tip of anchor.

$$B_{bot.lower.1} := W_1 + \left(1ft + 4in + \frac{7in}{\cos(30deg)}\right) = 5.007\,ft$$

$$B_{bot.lower.2} := W_2 + \left(1ft + 4in + \frac{7in}{\cos(30deg)}\right) = 5.007\,ft$$

$$B_{bot.lower.3} := W_3 + \left(1ft + 4in + \frac{7in}{\cos(30deg)}\right) = 5.007\,ft$$

Perpendicular Distance to Traffic at each Anchor

$$d_{traffic.1} := d_{traffic} + dist_{anchor.1} \cdot \tan(\alpha_{skew}) = 2\,ft$$

$$d_{traffic.2} := d_{traffic} + dist_{anchor.2} \cdot \tan(\alpha_{skew}) = 2\,ft$$

$$d_{traffic.3} := d_{traffic} + dist_{anchor.3} \cdot \tan(\alpha_{skew}) = 2\,ft$$

Height of backfill at CL of each anchor

$$d_{slope.1} := \max(0, \min(B_{bot.1}, d_{traffic.1} - BreakInSlope - t_{wall})) = 0\,ft$$

$$d_{slope.2} := \max(0, \min(B_{bot.2}, d_{traffic.2} - BreakInSlope - t_{wall})) = 0\,ft$$

$$d_{slope.3} := \max(0, \min(B_{bot.3}, d_{traffic.3} - BreakInSlope - t_{wall})) = 0\,ft$$

Distance to break in slope, measured perpendicular to wall from inside face of wall, limited by B.bot.

$$h_{backfill.1} := \max(h_{wall.1}, h_{wall.1} + \min(B_{bot.1}, d_{slope.1}) \cdot \tan(\beta)) = 16.011\,ft$$

$$h_{backfill.2} := \max(h_{wall.2}, h_{wall.2} + \min(B_{bot.2}, d_{slope.2}) \cdot \tan(\beta)) = 15.723\,ft$$

$$h_{backfill.3} := \max(h_{wall.3}, h_{wall.3} + \min(B_{bot.3}, d_{slope.3}) \cdot \tan(\beta)) = 0\,ft$$

The height of backfill is taken at the end of the reinforced soil mass.

External Stability Analysis at Anchor 1

Calculate Vertical Loads and Associated Lever Arms ***(All Lever Arms are from Point "O")***

$$DC_{wall.1} := t_{wall} \cdot h_{wall.1} \cdot \gamma_c = 2.402 \cdot \frac{kip}{ft}$$

$$x_{DC.wall.1} := \frac{1}{2} t_{wall} = 0.5\,ft$$

$$EV1a_1 := \frac{1}{2} \gamma_s \cdot \left(h_{backfill.1} - h_{wall.1}\right) \cdot \left(d_{slope.1}\right) = 0 \cdot \frac{kip}{ft}$$

$$x_{EV1a.1} := t_{wall} + \frac{2}{3} d_{slope.1} = 1\,ft$$

$$EV1b_1 := \gamma_s \cdot \left(h_{backfill.1} - h_{wall.1}\right) \cdot \left(B_{bot.1} - d_{slope.1}\right) = 0 \cdot \frac{kip}{ft}$$

$$x_{EV1b.1} := t_{wall} + d_{slope.1} + \frac{1}{2}\left(B_{bot.1} - d_{slope.1}\right) = 4.561\,ft$$

$$EV2_1 := \gamma_s \cdot \left(h_{wall.1} - 3.5ft\right) \cdot B_{bot.1} = 12.474 \cdot \frac{kip}{ft}$$

$$x_{EV2.1} := t_{wall} + \frac{1}{2} B_{bot.1} = 4.561\,ft$$

$$EV3_1 := \gamma_s \cdot (3.5ft) \cdot \left(B_{bot.lower.1} - \frac{7in}{\cos(30deg)}\right) = 2.123 \cdot \frac{kip}{ft}$$

$$x_{EV3.1} := t_{wall} + \frac{1}{2}\left(B_{bot.lower.1} - \frac{7in}{\cos(30deg)}\right) = 3.167\,ft$$

$$EV4_1 := \gamma_s \cdot \frac{1}{2} \cdot 3.5ft \cdot \left[\left(W_1 + 3ft + 5.375in\right) - \left(B_{bot.lower.1} - \frac{7in}{\cos(30deg)}\right)\right] = 0.518 \cdot \frac{kip}{ft}$$

$$x_{EV4.1} := t_{wall} + B_{bot.lower.1} + \frac{1}{3} \cdot \left[W_1 + 3ft + 5.375in - \left(B_{bot.lower.1} - \frac{7in}{\cos(30deg)}\right)\right] = 6.712\,ft$$

$$DC_{anchor.1} := \frac{1}{trib_1} \cdot \begin{cases} (1740lbf) & \text{if } AnchorType_1 = \text{"B"} \\ (2010lbf) & \text{if } AnchorType_1 = \text{"C"} \\ (2285lbf) & \text{if } AnchorType_1 = \text{"D"} \\ (2550lbf) & \text{if } AnchorType_1 = \text{"E"} \end{cases} = 0.588 \cdot \frac{kip}{ft}$$

(See Anchor Geometry Drawing)

$$x_{anchor.1} := t_{wall} + \begin{cases} (2ft + 2.25in) & \text{if } AnchorType_1 = \text{"B"} \\ (2ft + 8.8125in) & \text{if } AnchorType_1 = \text{"C"} \\ (3ft + 5.125in) & \text{if } AnchorType_1 = \text{"D"} \\ (4ft + 0.0625in) & \text{if } AnchorType_1 = \text{"E"} \end{cases} = 5.005 \cdot ft$$

$$LS_{vert.1} := \begin{cases} \left[q_{sur} \cdot \left[B_{bot.1} - \left(d_{traffic.1}\right)\right]\right] & \text{if } d_{traffic.1} < B_{bot.1} \\ 0 & \text{otherwise} \end{cases} = 1.434 \cdot \frac{kip}{ft}$$

Used in bearing calcs only

$$x_{LS.vert.1} := t_{wall} + d_{traffic.1} + \frac{1}{2}\left(B_{bot.1} - d_{traffic.1}\right) = 5.561\,ft$$

$$DC_{ftg.1} := \gamma_c \cdot t_{ftg} \cdot h_{ftg} = 0.9 \cdot \frac{kip}{ft}$$

$$x_{DC.ftg.1} := \frac{t_{ftg}}{2} = 1.5\,ft$$

Note: This moment arm is measured from the front toe of the ftg since it is only used in bearing calculations.

Calculate Lateral Loads and Associated Lever Arms

$$EH1_{1.vert} := \frac{1}{2} k_{a.wall} \cdot \gamma_s \cdot \left(h_{backfill.1} - 3.5ft\right)^2 \cdot \sin\left(\delta_{wall}\right) = 1.381 \cdot \frac{kip}{ft}$$

$$EH1_{1.hor} := \frac{1}{2} k_{a.wall} \cdot \gamma_s \cdot \left(h_{backfill.1} - 3.5ft\right)^2 \cdot \cos\left(\delta_{wall}\right) = 2.895 \cdot \frac{kip}{ft}$$

$$x_{EH1.1} := t_{wall} + B_{bot.1} = 8.121\,ft$$

$$y_{EH1.1} := 3.5ft + \frac{1}{3}\left(h_{backfill.1} - 3.5ft\right) = 7.67\,ft$$

$$EH2_{1.vert} := k_{a.anchor} \cdot \gamma_s \cdot \left(h_{backfill.1} - 3.5ft\right) \cdot (4ft) \cdot \sin\left(\delta_{anchor} - 30deg\right) = -0.154 \cdot \frac{kip}{ft}$$

$$EH2_{1.hor} := k_{a.anchor} \cdot \gamma_s \cdot \left(h_{backfill.1} - 3.5ft\right) \cdot (4ft) \cdot \cos\left(\delta_{anchor} - 30deg\right) = 0.667 \cdot \frac{kip}{ft}$$

$$x_{EH2.1} := t_{wall} + \frac{1}{2}\left(B_{bot.1} + B_{bot.lower.1}\right) = 7.064\,ft$$

$$y_{EH2.1} := 3.5ft - \frac{1}{2} \cdot 4ft = 1.5\,ft$$

$$EH3_{1.vert} := \frac{1}{2} k_{a.anchor} \cdot \gamma_s \cdot (4ft)^2 \cdot \sin\left(\delta_{anchor} - 30deg\right) = -0.025 \cdot \frac{kip}{ft}$$

$$EH3_{1.hor} := \frac{1}{2} k_{a.anchor} \cdot \gamma_s \cdot (4ft)^2 \cdot \cos\left(\delta_{anchor} - 30deg\right) = 0.107 \cdot \frac{kip}{ft}$$

$$x_{EH3.1} := t_{wall} + B_{bot.lower.1} + \left(3.5ft - \frac{2}{3} \cdot 4ft\right) \tan(30deg) = 6.488\,ft$$

$$y_{EH3.1} := 3.5ft - \frac{2}{3} \cdot 4ft = 10 \cdot in$$

$$LS_{hor.1} := \begin{cases} \left(k_{a.wall} \cdot q_{sur} \cdot h_{backfill.1}\right) & \text{if } d_{traffic.1} < B_{bot.1} + \frac{h_{wall.1}}{2} \\ 0 & \text{otherwise} \end{cases} = 1.312 \cdot \frac{kip}{ft}$$

$$x_{LS.hor.1} := t_{wall} + \frac{1}{2}\left(B_{bot.lower.1} + B_{bot.1}\right) = 7.064\,ft$$ (Assumed for ease of calculation)

$$y_{LS.hor.1} := \frac{1}{2} h_{backfill.1} = 8.005\,ft$$

Check Sliding

Per AASHTO 11.11.4.2, Sliding shall be evaluated according to 10.6.3.4. Per 11.5.3, sliding shall be evaluated at the strength limit state. Use minimum load factors for vertical loads and maximum load factors for horizontal loads. Assume the failure plane is beneath the wall ftg, which will be grouted to the wall during construction. This is consistent with assumptions in the HITEC report (page D24).

Resisting Forces

$$\phi_\tau := 0.9$$ AASHTO Table 10.5.5.2.2-1, "Precast on Sand" or "Soil on Soil"

$$\Sigma V_1 := 0.9\left(DC_{wall.1} + DC_{anchor.1} + DC_{ftg.1}\right) + 1.0 \cdot \left(EV1a_1 + EV1b_1 + EV2_1 + EV3_1 + EV4_1\right) \ldots + \eta_i \cdot 1.50 \cdot \left(EH1_{1.vert} + EH2_{1.vert} + EH3_{1.vert}\right) = 20.419 \cdot \frac{kip}{ft}$$

$$R_{\tau.1} := 0.8 \cdot \tan\left(\phi_{ftg}\right) \cdot \Sigma V_1 = 11.438 \cdot \frac{kip}{ft}$$ AASHTO 10.6.3.4

$$\boxed{R_{r.1} := \phi_\tau \cdot R_{\tau.1} = 10.294 \cdot \frac{kip}{ft}}$$

Driving Forces

$$\Sigma H_{\tau.1} := \eta_i \cdot \left[1.50 \cdot \left(EH1_{1.hor} + EH2_{1.hor} + EH3_{1.hor}\right) + 1.75 LS_{hor.1}\right] = 7.801 \cdot \frac{kip}{ft}$$

$$Check_{sliding.1} := \begin{cases} \text{"OK"} & \text{if } \frac{R_{r.1}}{\Sigma H_{\tau.1}} \geq 1 \\ \text{"NG"} & \text{otherwise} \end{cases} = \text{"OK"}$$

Check Overturning and Eccentricity

Per AASHTO 11.11.4.4, Overturning shall be evaluated according to 11.6.3.3. A maximum of 80% of the retained soil shall be used to resist overturning. Per 11.6.3.3, evaluate overturning and eccentricity at the strength limit state using maximum load factors for horizontal loads and minimum load factors for vertical loads. First, evaluate overturning about front base of wall. If the wall passes the overturning check, the wing will not experience uplift with respect to the footing. Therefore evaluate eccentricity at the bottom of the footing. The location of the resultant of the reaction forces shall be located within the middle half of the base width (footing width plus anchor projection). Eccentricity is measured from the center of the base width toward the stream side of the footing. Assume that a negative eccentricity (beyond the center of the base, toward the backfill) is acceptable since this condition will engage passive earth pressures.

Resisting Forces

$$\begin{aligned} Resisting_1 := {} & 0.9\left(DC_{wall.1}\cdot x_{DC.wall.1} + DC_{anchor.1}\cdot x_{anchor.1}\right) \ldots \\ & + 1.0\cdot 0.8\cdot\left(EV1a_1\cdot x_{EV1a.1} + EV1b_1\cdot x_{EV1b.1} + EV2_1\cdot x_{EV2.1} + EV3_1\cdot x_{EV3.1} + EV4_1\cdot x_{EV4.1}\right) \ldots \\ & + 1.50\left(EH1_{1.vert}\cdot x_{EH1.1} + EH2_{1.vert}\cdot x_{EH2.1} + EH3_{1.vert}\cdot x_{EH3.1}\right) \end{aligned} = 72.353\cdot\frac{kip\cdot ft}{ft}$$

Driving Forces

$$Driving_1 := 1.50\cdot\left(EH1_{1.hor}\cdot y_{EH1.1} + EH2_{1.hor}\cdot y_{EH2.1} + EH3_{1.hor}\cdot y_{EH3.1}\right) + 1.75LS_{hor.1}\cdot y_{LS.hor.1} = 53.331\cdot\frac{kip\cdot ft}{ft}$$

$$Check_{OT.1} := \begin{cases} \text{"OK"} & \text{if } \dfrac{Resisting_1}{Driving_1} \ge 1 \\ \text{"NG"} & \text{otherwise} \end{cases} = \text{"OK"}$$

Eccentricity of Resultant

$$\begin{aligned} \Sigma V_{e.1} := {} & 0.9\left(DC_{wall.1} + DC_{anchor.1}\right) + 1.0\cdot 0.8\cdot\left(EV1a_1 + EV1b_1 + EV2_1 + EV3_1 + EV4_1\right) \ldots \\ & + 1.50\left(EH1_{1.vert} + EH2_{1.vert} + EH3_{1.vert}\right) \end{aligned} = 16.586\cdot\frac{kip}{ft}$$

$$l_1 := \frac{\left[\Sigma V_{e.1}\cdot\left[\dfrac{\left(Resisting_1 - Driving_1\right)}{\Sigma V_{e.1}} + \dfrac{1}{2}\left(t_{ftg} - t_{wall}\right)\right] + 0.9DC_{ftg.1}\cdot x_{DC.ftg.1}\right]}{\Sigma V_{e.1} + 0.9DC_{ftg.1}} = 2.117\,ft$$

(Distance to resultant from face of ftg)

$$B_1 := B_{bot.lower.1} + t_{wall} + \frac{1}{2}\left(t_{ftg} - t_{wall}\right) = 7.007\,ft$$

$$e_1 := \max\left(\frac{B_1}{2} - l_1, 0ft\right) = 1.387\,ft$$

$$e_{allow.1} := \frac{B_1}{4} = 1.752\,ft$$

(Within Middle Half of ftg per AASHTO 11.6.3.3)

$$Check_{e.1} := \begin{cases} \text{"OK"} & \text{if } \frac{e_1}{e_{allow.1}} \le 1 \\ \text{"NG"} & \text{otherwise} \end{cases} = \text{"OK"}$$

Check Bearing Pressure

Per 11.11.4.3 Evaluate bearing pressure with respect to resistance calculated in 10.6.3. Per HITEC p. D24, use the horizontal portion of the anchor at its base plus the footing width. Evaluate at the strength limit state. Use 100% of the weight of the retained soil. When Live Load Surcharge is present, Strength I with maximum load factors for vertical loads and horizontal loads controls. Include the effects of live load surcharge. Since lever arms are calculated from the front face of the wall, must add to the eccentricity the distance between wall and toe of footing.

$$\begin{aligned} Resisting_{brg.1} := {} & 1.25\left(DC_{wall.1}\cdot x_{DC.wall.1} + DC_{anchor.1}\cdot x_{anchor.1}\right) \ldots \\ & + 1.35\cdot\left(EV1a_1\cdot x_{EV1a.1} + EV1b_1\cdot x_{EV1b.1} + EV2_1\cdot x_{EV2.1} + EV3_1\cdot x_{EV3.1} + EV4_1\cdot x_{EV4.1}\right) \ldots \\ & + 1.35\left(EH1_{1.vert}\cdot x_{EH1.1} + EH2_{1.vert}\cdot x_{EH2.1} + EH3_{1.vert}\cdot x_{EH3.1}\right) \ldots \\ & + 1.75\cdot\left(LS_{vert.1}\cdot x_{LS.vert.1}\right) \end{aligned} = 123.163\cdot\frac{kip\cdot ft}{ft}$$

$$Driving_{brg.1} := 1.35\left(EH1_{1.hor}\cdot y_{EH1.1} + EH2_{1.hor}\cdot y_{EH2.1} + EH3_{1.hor}\cdot y_{EH3.1}\right) + 1.75LS_{hor.1}\cdot y_{LS.hor.1} = 49.836\cdot\frac{kip\cdot ft}{ft}$$

$$\begin{aligned} \Sigma V_{brg.1} := {} & 1.25\cdot\left(DC_{wall.1} + DC_{anchor.1}\right) + 1.35\cdot\left(EV1a_1 + EV1b_1 + EV2_1 + EV3_1 + EV4_1\right) \ldots \\ & + 1.35\cdot\left(EH1_{1.vert} + EH2_{1.vert} + EH3_{1.vert}\right) + 1.75\cdot\left(LS_{vert.1}\right) \end{aligned} = 28.275\cdot\frac{kip}{ft}$$

$$l_{brg.1} := \frac{\left[\Sigma V_{brg.1}\cdot\left[\frac{\left(Resisting_{brg.1} - Driving_{brg.1}\right)}{\Sigma V_{brg.1}} + \frac{1}{2}\left(t_{ftg} - t_{wall}\right)\right] + 1.25DC_{ftg.1}\cdot x_{DC.ftg.1}\right]}{\Sigma V_{brg.1} + 1.25DC_{ftg.1}} = 3.513\,ft$$

(Distance to resultant from face of ftg)

$$e_{brg.1} := \max\left(\frac{B_1}{2} - l_{brg.1}, 0ft\right) = 0\,ft$$

$$B_1 - 2\cdot e_{brg.1} = 7.007\,ft$$

Effective footing width

$$\sigma_{foot.1} := \frac{\Sigma V_{brg.1}}{B_1 - 2\cdot e_{brg.1}} = 4.035\cdot ksf$$

Eq. 11.6.3.2-1, Rectangular Distibution for Foundations on soil

$$q_{R.1} := 0.45\cdot 14.0ksf = 6.3\cdot ksf$$

Conservatively use resistance for 6ft width

$$CheckBearing_1 := \begin{cases} \text{"OK"} & \text{if } \frac{q_{R.1}}{\sigma_{foot.1}} \ge 1 \\ \text{"NG"} & \text{otherwise} \end{cases} = \text{"OK"}$$

External Stability Analysis at Anchor 2

Calculate Vertical Loads and Associated Lever Arms ***(All Lever Arms are from Point "O")***

$$DC_{wall.2} := t_{wall} \cdot h_{wall.2} \cdot \gamma_c = 2.358 \cdot \frac{kip}{ft}$$

$$x_{DC.wall.2} := \frac{1}{2} t_{wall} = 0.5\,ft$$

$$EV1a_2 := \frac{1}{2} \gamma_s \cdot \left(h_{backfill.2} - h_{wall.2}\right) \cdot \left(d_{slope.2}\right) = 0 \cdot \frac{kip}{ft}$$

$$x_{EV1a.2} := t_{wall} + \frac{2}{3} d_{slope.2} = 1\,ft$$

$$EV1b_2 := \gamma_s \cdot \left(h_{backfill.2} - h_{wall.2}\right) \cdot \left(B_{bot.2} - d_{slope.2}\right) = 0 \cdot \frac{kip}{ft}$$

$$x_{EV1b.2} := t_{wall} + d_{slope.2} + \frac{1}{2}\left(B_{bot.2} - d_{slope.2}\right) = 4.561\,ft$$

$$EV2_2 := \gamma_s \cdot \left(h_{wall.2} - 3.5ft\right) \cdot B_{bot.2} = 12.186 \cdot \frac{kip}{ft}$$

$$x_{EV2.2} := t_{wall} + \frac{1}{2} B_{bot.2} = 4.561\,ft$$

$$EV3_2 := \gamma_s \cdot (3.5ft) \cdot \left(B_{bot.lower.2} - \frac{7in}{\cos(30deg)}\right) = 2.123 \cdot \frac{kip}{ft}$$

$$x_{EV3.2} := t_{wall} + \frac{1}{2}\left(B_{bot.lower.2} - \frac{7in}{\cos(30deg)}\right) = 3.167\,ft$$

$$EV4_2 := \gamma_s \cdot \frac{1}{2} \cdot 3.5ft \cdot \left[\left(W_2 + 3ft + 5.375in\right) - \left(B_{bot.lower.2} - \frac{7in}{\cos(30deg)}\right)\right] = 0.518 \cdot \frac{kip}{ft}$$

$$x_{EV4.2} := t_{wall} + B_{bot.lower.2} + \frac{1}{3} \cdot \left[W_2 + 3ft + 5.375in - \left(B_{bot.lower.2} - \frac{7in}{\cos(30deg)}\right)\right] = 6.712\,ft$$

$$DC_{anchor.2} := \frac{1}{trib_2} \cdot \begin{cases} (1740lbf) & \text{if } AnchorType_2 = \text{"B"} \\ (2010lbf) & \text{if } AnchorType_2 = \text{"C"} \\ (2285lbf) & \text{if } AnchorType_2 = \text{"D"} \\ (2550lbf) & \text{if } AnchorType_2 = \text{"E"} \end{cases} = 0.588 \cdot \frac{kip}{ft}$$

(See Anchor Geometry Drawing)

$$x_{anchor.2} := t_{wall} + \begin{cases} (2ft + 2.25in) & \text{if } AnchorType_2 = \text{"B"} \\ (2ft + 8.8125in) & \text{if } AnchorType_2 = \text{"C"} \\ (3ft + 5.125in) & \text{if } AnchorType_2 = \text{"D"} \\ (4ft + 0.0625in) & \text{if } AnchorType_2 = \text{"E"} \end{cases} = 5.005 \cdot ft$$

$$LS_{vert.2} := \begin{cases} \left[q_{sur} \cdot \left[B_{bot.2} - \left(d_{traffic.2}\right)\right]\right] & \text{if } d_{traffic.2} < B_{bot.2} \\ 0 & \text{otherwise} \end{cases} = 1.434 \cdot \frac{kip}{ft}$$

Used in bearing calcs only

$$x_{LS.vert.2} := t_{wall} + d_{traffic.2} + \frac{1}{2}\left(B_{bot.2} - d_{traffic.2}\right) = 5.561\,ft$$

$$DC_{ftg.2} := \gamma_c \cdot t_{ftg} \cdot h_{ftg} = 0.9 \cdot \frac{kip}{ft}$$

$$x_{DC.ftg.2} := \frac{t_{ftg}}{2} = 1.5\,ft$$

Note: This moment arm is measured from the front toe of the ftg since it is only used in bearing calculations.

Calculate Lateral Loads and Associated Lever Arms

$$EH1_{2.vert} := \frac{1}{2} k_{a.wall} \cdot \gamma_s \cdot \left(h_{backfill.2} - 3.5ft\right)^2 \cdot \sin\left(\delta_{wall}\right) = 1.318 \cdot \frac{kip}{ft}$$

$$EH1_{2.hor} := \frac{1}{2} k_{a.wall} \cdot \gamma_s \cdot \left(h_{backfill.2} - 3.5ft\right)^2 \cdot \cos\left(\delta_{wall}\right) = 2.763 \cdot \frac{kip}{ft}$$

$$x_{EH1.2} := t_{wall} + B_{bot.2} = 8.121\,ft$$

$$y_{EH1.2} := 3.5ft + \frac{1}{3}\left(h_{backfill.2} - 3.5ft\right) = 7.574\,ft$$

$$EH2_{2.vert} := k_{a.anchor} \cdot \gamma_s \cdot \left(h_{backfill.2} - 3.5ft\right) \cdot (4ft) \cdot \sin\left(\delta_{anchor} - 30deg\right) = -0.151 \cdot \frac{kip}{ft}$$

$$EH2_{2.hor} := k_{a.anchor} \cdot \gamma_s \cdot \left(h_{backfill.2} - 3.5ft\right) \cdot (4ft) \cdot \cos\left(\delta_{anchor} - 30deg\right) = 0.652 \cdot \frac{kip}{ft}$$

$$x_{EH2.2} := t_{wall} + \frac{1}{2}\left(B_{bot.2} + B_{bot.lower.2}\right) = 7.064\,ft$$

$$y_{EH2.2} := 3.5ft - \frac{1}{2} \cdot 4ft = 1.5\,ft$$

$$EH3_{2.vert} := \frac{1}{2} k_{a.anchor} \cdot \gamma_s \cdot (4ft)^2 \cdot \sin\left(\delta_{anchor} - 30deg\right) = -0.025 \cdot \frac{kip}{ft}$$

$$EH3_{2.hor} := \frac{1}{2} k_{a.anchor} \cdot \gamma_s \cdot (4ft)^2 \cdot \cos\left(\delta_{anchor} - 30deg\right) = 0.107 \cdot \frac{kip}{ft}$$

$$x_{EH3.2} := t_{wall} + B_{bot.lower.2} + \left(3.5ft - \frac{2}{3}\cdot 4ft\right)\tan(30deg) = 6.488\,ft$$

$$y_{EH3.2} := 3.5ft - \frac{2}{3}\cdot 4ft = 10\cdot in$$

$$LS_{hor.2} := \begin{cases} \left(k_{a.wall}\cdot q_{sur}\cdot h_{backfill.2}\right) & \text{if } d_{traffic.2} < B_{bot.2} + \frac{h_{wall.2}}{2} \\ 0 & \text{otherwise} \end{cases} = 1.289\cdot\frac{kip}{ft}$$

$$x_{LS.hor.2} := t_{wall} + \frac{1}{2}\left(B_{bot.lower.2} + B_{bot.2}\right) = 7.064\,ft$$ (Assumed for ease of calculation)

$$y_{LS.hor.2} := \frac{1}{2}h_{backfill.2} = 7.861\,ft$$

Check Sliding

Per AASHTO 11.11.4.2, Sliding shall be evaluated according to 10.6.3.4. Per 11.5.3, sliding shall be evaluated at the strength limit state. Use minimum load factors for vertical loads and maximum load factors for horizontal loads. Assume the failure plane is beneath the wall ftg, which will be grouted to the wall during construction. This is consistent with assumptions in the HITEC report (page D24).

Resisting Forces

$$\phi_{\tau} := 0.9$$ AASHTO Table 10.5.5.2.2-1, "Precast on Sand" or "Soil on Soil"

$$\Sigma V_2 := 0.9\left(DC_{wall.2} + DC_{anchor.2} + DC_{ftg.2}\right) + 1.0\cdot\left(EV1a_2 + EV1b_2 + EV2_2 + EV3_2 + EV4_2\right) \ldots = 20.003\cdot\frac{kip}{ft}$$
$$+\eta_i\cdot 1.50\cdot\left(EH1_{2.vert} + EH2_{2.vert} + EH3_{2.vert}\right)$$

$$R_{\tau.2} := 0.8\cdot\tan\left(\phi_{ftg}\right)\cdot\Sigma V_2 = 11.205\cdot\frac{kip}{ft}$$ AASHTO 10.6.3.4

$$\boxed{R_{r.2} := \phi_{\tau}\cdot R_{\tau.2} = 10.085\cdot\frac{kip}{ft}}$$

Driving Forces

$$\Sigma H_{\tau.2} := \eta_i\cdot\left[1.50\cdot\left(EH1_{2.hor} + EH2_{2.hor} + EH3_{2.hor}\right) + 1.75LS_{hor.2}\right] = 7.538\cdot\frac{kip}{ft}$$

$$Check_{sliding.2} := \begin{cases} \text{"OK"} & \text{if } \dfrac{R_{r.2}}{\Sigma H_{\tau.2}} \geq 1 \\ \text{"NG"} & \text{otherwise} \end{cases} = \text{"OK"}$$

Check Overturning and Eccentricity

Per AASHTO 11.11.4.4, Overturning shall be evaluated according to 11.6.3.3. A maximum of 80% of the retained soil shall be used to resist overturning. Per 11.6.3.3, evaluate overturning and eccentricity at the strength limit state using maximum load factors for horizontal loads and minimum load factors for vertical loads. First, evaluate overturning about front base of wall. If the wall passes the overturning check, the wing will not experience uplift with respect to the footing. Therefore evaluate eccentricity at the bottom of the footing. The location of the resultant of the reaction forces shall be located within the middle half of the base width (footing width plus anchor projection). Eccentricity is measured from the center of the base width toward the stream side of the footing. Assume that a negative eccentricity (beyond the center of the base, toward the backfill) is acceptable since this condition will engage passive earth pressures.

Resisting Forces

$$\begin{aligned} Resisting_2 := {} & 0.9\left(DC_{wall.2}\cdot x_{DC.wall.2} + DC_{anchor.2}\cdot x_{anchor.2}\right) \ldots \\ & + 1.0\cdot 0.8\cdot\left(EV1a_2\cdot x_{EV1a.2} + EV1b_2\cdot x_{EV1b.2} + EV2_2\cdot x_{EV2.2} + EV3_2\cdot x_{EV3.2} + EV4_2\cdot x_{EV4.2}\right) \ldots \\ & + 1.50\left(EH1_{2.vert}\cdot x_{EH1.2} + EH2_{2.vert}\cdot x_{EH2.2} + EH3_{2.vert}\cdot x_{EH3.2}\right) \end{aligned} = 70.554\cdot\frac{kip\cdot ft}{ft}$$

Driving Forces

$$Driving_2 := 1.50\cdot\left(EH1_{2.hor}\cdot y_{EH1.2} + EH2_{2.hor}\cdot y_{EH2.2} + EH3_{2.hor}\cdot y_{EH3.2}\right) + 1.75LS_{hor.2}\cdot y_{LS.hor.2} = 50.724\cdot\frac{kip\cdot ft}{ft}$$

$$Check_{OT.2} := \begin{cases} \text{"OK"} & \text{if } \dfrac{Resisting_2}{Driving_2} \ge 1 \\ \text{"NG"} & \text{otherwise} \end{cases} = \text{"OK"}$$

Eccentricity of Resultant

$$\begin{aligned} \Sigma V_{e.2} := {} & 0.9\left(DC_{wall.2} + DC_{anchor.2}\right) + 1.0\cdot 0.8\cdot\left(EV1a_2 + EV1b_2 + EV2_2 + EV3_2 + EV4_2\right) \ldots \\ & + 1.50\left(EH1_{2.vert} + EH2_{2.vert} + EH3_{2.vert}\right) \end{aligned} = 16.228\cdot\frac{kip}{ft}$$

$$l_2 := \frac{\left[\Sigma V_{e.2}\cdot\left[\frac{\left(Resisting_2 - Driving_2\right)}{\Sigma V_{e.2}} + \frac{1}{2}\left(t_{ftg} - t_{wall}\right)\right] + 0.9DC_{ftg.2}\cdot x_{DC.ftg.2}\right]}{\Sigma V_{e.2} + 0.9DC_{ftg.2}} = 2.188\,ft$$

(Distance to resultant from face of ftg)

$$B_2 := B_{bot.lower.2} + t_{wall} + \frac{1}{2}\left(t_{ftg} - t_{wall}\right) = 7.007\,ft$$

$$e_2 := \max\left(\frac{B_2}{2} - l_2, 0ft\right) = 1.316\,ft$$

$$e_{allow.2} := \frac{B_2}{4} = 1.752\,ft$$

(Within Middle Half of ftg per AASHTO 11.6.3.3)

$$Check_{e.2} := \begin{cases} \text{"OK"} & \text{if } \dfrac{e_2}{e_{allow.2}} \le 1 \\ \text{"NG"} & \text{otherwise} \end{cases} = \text{"OK"}$$

Check Bearing Pressure

Per 11.11.4.3 Evaluate bearing pressure with respect to resistance calculated in 10.6.3. Per HITEC p. D24, use the horizontal portion of the anchor at its base plus the footing width. Evaluate at the strength limit state. Use 100% of the weight of the retained soil. When Live Load Surcharge is present, Strength I with maximum load factors for vertical loads and horizontal loads controls. Include the effects of live load surcharge. Since lever arms are calculated from the front face of the wall, must add to the eccentricity the distance between wall and toe of footing.

$$\begin{aligned} Resisting_{brg.2} := {} & 1.25\left(DC_{wall.2}\cdot x_{DC.wall.2} + DC_{anchor.2}\cdot x_{anchor.2}\right) \ldots \\ & + 1.35\cdot\left(EV1a_2\cdot x_{EV1a.2} + EV1b_2\cdot x_{EV1b.2} + EV2_2\cdot x_{EV2.2} + EV3_2\cdot x_{EV3.2} + EV4_2\cdot x_{EV4.2}\right) \ldots \\ & + 1.35\left(EH1_{2.vert}\cdot x_{EH1.2} + EH2_{2.vert}\cdot x_{EH2.2} + EH3_{2.vert}\cdot x_{EH3.2}\right) \ldots \\ & + 1.75\cdot\left(LS_{vert.2}\cdot x_{LS.vert.2}\right) \end{aligned} = 120.707\cdot\frac{kip\cdot ft}{ft}$$

$$Driving_{brg.2} := 1.35\left(EH1_{2.hor}\cdot y_{EH1.2} + EH2_{2.hor}\cdot y_{EH2.2} + EH3_{2.hor}\cdot y_{EH3.2}\right) + 1.75LS_{hor.2}\cdot y_{LS.hor.2} = 47.424\cdot\frac{kip\cdot ft}{ft}$$

$$\begin{aligned} \Sigma V_{brg.2} := {} & 1.25\cdot\left(DC_{wall.2} + DC_{anchor.2}\right) + 1.35\cdot\left(EV1a_2 + EV1b_2 + EV2_2 + EV3_2 + EV4_2\right) \ldots \\ & + 1.35\cdot\left(EH1_{2.vert} + EH2_{2.vert} + EH3_{2.vert}\right) + 1.75\cdot\left(LS_{vert.2}\right) \end{aligned} = 27.752\cdot\frac{kip}{ft}$$

$$l_{brg.2} := \frac{\left[\Sigma V_{brg.2}\cdot\left[\dfrac{\left(Resisting_{brg.2} - Driving_{brg.2}\right)}{\Sigma V_{brg.2}} + \dfrac{1}{2}\left(t_{ftg} - t_{wall}\right)\right] + 1.25DC_{ftg.2}\cdot x_{DC.ftg.2}\right]}{\Sigma V_{brg.2} + 1.25DC_{ftg.2}} = 3.557\,ft$$

(Distance to resultant from face of ftg)

$$e_{brg.2} := \max\left(\frac{B_2}{2} - l_{brg.2}, 0ft\right) = 0\,ft$$

$$B_2 - 2\cdot e_{brg.2} = 7.007\,ft$$

Effective footing width

$$\sigma_{foot.2} := \frac{\Sigma V_{brg.2}}{B_2 - 2\cdot e_{brg.2}} = 3.961\cdot ksf$$

Eq. 11.6.3.2-1, Rectangular Distibution for Foundations on soil

$$q_{R.2} := 0.45\cdot 14.0ksf = 6.3\cdot ksf$$

Conservatively use resistance for 6ft width

$$CheckBearing_1 := \begin{cases} \text{"OK"} & \text{if } \dfrac{q_{R.2}}{\sigma_{foot.2}} \ge 1 \\ \text{"NG"} & \text{otherwise} \end{cases} = \text{"OK"}$$

Check Wall Reinforcement

Assume the wall stem is cantilevered above the anchor. Use tallest wall section above anchor. Use maximum horizontal load factors to calculate moments and shears. Use minimum load factor for axial compression.

Calculate Horizontal Loads and resp. Lever Arms at top of Anchor

$h_{wall.internal} := h_{wall.1} - 3.5ft = 12.511\,ft$

$EH_{wall} := \frac{1}{2} k_{a.wall} \cdot \gamma_s \cdot h_{wall.internal}^2 = 3.208 \cdot \frac{kip}{ft}$ $\qquad y_{EH.wall} := \frac{1}{3} h_{wall.internal} = 4.17\,ft$

$LS_{wall} := \begin{cases} 0 & \text{if } d_{traffic.1} \geq \frac{1}{2} \cdot h_{wall.1} \\ \left(k_{a.wall} \cdot q_{sur} \cdot h_{wall.internal}\right) & \text{otherwise} \end{cases} = 1.026 \cdot \frac{kip}{ft}$ $\qquad y_{LS.wall} := \frac{1}{2} h_{wall.internal} = 6.255\,ft$

$Mu_{wall} := \eta_i \cdot \left(1.5 \cdot EH_{wall} \cdot y_{EH.wall} + 1.75 LS_{wall} \cdot y_{LS.wall}\right) = 31.291 \cdot \frac{kip \cdot ft}{ft}$

$Vu_{wall} := \eta_i \cdot \left(1.5 EH_{wall} + 1.75 LS_{wall}\right) = 6.606 \cdot \frac{kip}{ft}$

$Nu_{wall} := -\eta_i \cdot \left(0.9 \cdot \gamma_c \cdot t_{wall} \cdot h_{wall.internal}\right) = -1.689 \cdot \frac{kip}{ft}$

Check Moment Capacity

$bar_{wall} := 6$ $\qquad s_{wall} := 7in$ $\qquad cover_{wall} := 2in$

$b_w := 1ft$

$diam_{wall} := \frac{bar_{wall}}{8} in = 0.75 \cdot in$

$As_{wall} := \frac{\pi \cdot diam_{wall}^2}{4} \cdot 12 \frac{in}{s_{wall}} = 0.757 \cdot in^2$

$d_{wall} := t_{wall} - cover_{wall} - \frac{diam_{wall}}{2} = 9.625 \cdot in$

$\phi_{moment} := 0.90$ Per AASHTO 5.5.4.2.1

$\phi_{shear} := 0.90$ Per AASHTO 5.5.4.2.1

Verify that f_y can be substituted for f_s in the equations of 5.7.3.2. This is allowed when

$\frac{c}{d_s} \le 0.60$.

$c_{wall} := \frac{As_{wall} \cdot f_y}{0.85 \cdot f_c \cdot \beta_1 \cdot b_w} = 1.114 \cdot in$ Simplified equation 5.7.3.1.2-4

$\frac{c_{wall}}{d_{wall}} = 0.116$ **This is less than 0.60 therefore f_y can be substituted for f_s**

$a_{wall} := \beta_1 \cdot c_{wall} = 0.891 \cdot in$

$Mn_{wall} := As_{wall} \cdot f_y \cdot \left(d_{wall} - \frac{a_{wall}}{2} \right)$

$Mr_{wall} := \phi_{moment} \cdot Mn_{wall} = 31.284 \cdot kip \cdot ft$

$Mu_{wall} \cdot b_w = 31.291 \cdot kip \cdot ft$

$$Check_{WallFlexure} := \begin{cases} \text{"OK"} & \text{if } \frac{Mr_{wall}}{Mu_{wall} \cdot b_w} \ge 1 \\ \text{"NG"} & \text{otherwise} \end{cases} = \text{"NG"}$$

$$\frac{Mu_{wall} \cdot b_w - Mr_{wall}}{Mu_{wall} \cdot b_w} = 0.02\,\%$$ **OK**

Check Minimum Flexural Reinforcement (5.7.3.3.2)

$f_r := 0.24 \cdot \sqrt{f_c \cdot ksi} = 0.537 \cdot ksi$ AASHTO 5.4.2.6

$I_{g.wall} := \frac{1}{12} \cdot b_w \cdot t_{wall}^3 = 1.728 \times 10^3 \cdot in^4$

$y_{t.wall} := \frac{t_{wall}}{2} = 6 \cdot in$ Distance from centroid to extreme tension fibers. Conservatively ignore reinforcement.

$S_{c.wall} := \frac{I_{g.wall}}{y_{t.wall}} = 288 \cdot in^3$

$\gamma_3 := 0.67$ 0.67 = Factor for Grade 60 ASTM A615 rebar

$\gamma_1 := 1.2$ 1.2 = Factor for precast segmental structures

$M_{cr.wall} := \gamma_3 \cdot \gamma_1 \cdot S_{c.wall} \cdot f_r = 10.355 \cdot kip \cdot ft$ Simplified AASHTO Eq 5.7.3.3.2-1

$1.33 Mu_{wall} \cdot b_w = 41.617 \cdot kip \cdot ft$

$$Check_{MinSteelWall} := \begin{cases} \text{"OK"} & \text{if } Mr_{wall} \ge \min\left(1.33 Mu_{wall} \cdot b_w, M_{cr.wall}\right) \\ \text{"NG"} & \text{otherwise} \end{cases} = \text{"OK"}$$

Shear Resistance at Bottom of Wall (Section 5.8.3.4.2)

The section contains less than the minimum transverse reinforcement specified in 5.8.2.5, therefore use equation 5.8.3.4.2-2 to determine the longitudinal strain effect factor (β) at the location of maximum shear.

$Mu := \max(Mu_{wall}, Vu_{wall} \cdot d_{wall})$ In the eqtn below Mu shall not be less than $Vu \cdot d_v$

$$\xi_{s_wall} := \frac{\frac{|Mu|}{d_{wall}} + 0.5Nu_{wall} + |Vu_{wall}|}{E_s \cdot As_{wall}} \cdot b_w \qquad 1000 \cdot \xi_{s_wall} = 2.04 \qquad (5.8.3.4.2\text{-}4)$$

$s_{x_wall} := d_{wall}$

$$s_{xe_wall} := s_{x_wall} \cdot \frac{1.38in}{Aggregate_{diam} + 0.63in} = 9.625 \cdot in \qquad (5.8.3.4.2\text{-}5)$$

$$\beta_{wall} := \left(\frac{4.8}{1 + 750 \cdot \xi_{s_wall}}\right) \cdot \left(\frac{51}{39 + \frac{s_{xe_wall}}{1in}}\right) = 1.991 \qquad (5.8.3.4.2\text{-}2)$$

$$\Theta_{wall} := 29deg + 3500deg \cdot \xi_{s_wall} = 36.135 \cdot deg \qquad (5.8.3.4.2\text{-}3)$$

$$Vn_{wall} := \min\left(0.25 \cdot f_c \cdot b_w \cdot d_{wall}, 0.0316 \cdot \beta_{wall} \cdot \sqrt{f_c \cdot ksi} \cdot b_w \cdot d_{wall}\right) = 16.247 \cdot kip \qquad (5.8.3.3)$$

$Vr_{wall} := \phi_{shear} \cdot Vn_{wall} = 14.622 \cdot kip$

$Vu_{wall} \cdot b_w = 6.606 \cdot kip$

$$Check_{WallShear} := \begin{cases} \text{"OK"} & \text{if } \frac{Vr_{wall}}{Vu_{wall} \cdot b_w} \geq 1 \\ \text{"NG"} & \text{otherwise} \end{cases} = \text{"OK"}$$

Check Crack Control in Section 5.7.3.4

$$Ms_{wall} := \eta_i \cdot \left(1.0 \cdot EH_{wall} \cdot y_{EH.wall} + 1.0LS_{wall} \cdot y_{LS.wall}\right) = 19.792 \cdot \frac{kip \cdot ft}{ft}$$

$$Ns_{wall} := -\eta_i \cdot \left(1.0 \cdot \gamma_c \cdot t_{wall} \cdot h_{wall.internal}\right) = -1.877 \cdot \frac{kip}{ft}$$

$$e_{wall} := \max\left[\left(\frac{Ms_{wall}}{Ns_{wall}} + d_{wall} - \frac{t_{wall}}{2}\right), 1.15 \cdot d_{wall}\right] = 0.922\,ft$$

$$j_{wall} := \min\left[\left[0.74 + .1 \cdot \left(\frac{e_{wall}}{d_{wall}}\right)\right], 0.9\right] = 0.855$$

$$i_{wall} := \frac{1}{1 - \left(j_{wall} \cdot \frac{d_{wall}}{e_{wall}}\right)} = 3.898$$

$$fss_{wall} := \frac{Ms_{wall} + Ns_{wall} \cdot \left(d_{wall} - \frac{t_{wall}}{2}\right)}{As_{wall} \cdot j_{wall} \cdot i_{wall} \cdot d_{wall}} = 9.495 \cdot \frac{ksi}{ft}$$

Stress in Reinforcement at Service Limit State

$$d_{c_wall} := t_{wall} - d_{wall} = 2.375 \cdot in$$

$$\beta_s := 1 + \frac{d_{c_wall}}{0.7 \cdot \left(t_{wall} - d_{c_wall}\right)} = 1.353$$

$$\gamma_e := 1.00$$

exposure factor

$$s_{max} := \frac{700\,\frac{kip}{in} \cdot \gamma_e}{\beta_s \cdot fss_{wall} \cdot b_w} - 2 \cdot d_{c_wall} = 49.758 \cdot in$$

$$Check_{MaxSpacing} := \begin{cases} \text{"OK"} & \text{if } s_{wall} \le s_{max} \\ \text{"NG"} & \text{otherwise} \end{cases} = \text{"OK"}$$

Check Minimum Bar Spacing in Section 5.10.3.1.2:

$$s_{min} := \max\left(diam_{wall}, 1.33 Aggregate_{diam}, 1in\right) = 1 \cdot in$$

$$Check_{MinSpacing} := \begin{cases} \text{"OK"} & \text{if } s_{wall} \ge s_{min} \\ \text{"NG"} & \text{otherwise} \end{cases} = \text{"OK"}$$

Check Maximum Bar Spacing in Section 5.10.3.2:

$$s_{max} := \min\left(1.5 \cdot t_{wall}, 18in\right) = 18 \cdot in$$

$$Check_{MaxSpacing} := \begin{cases} \text{"OK"} & \text{if } s_{wall} \le s_{max} \\ \text{"NG"} & \text{otherwise} \end{cases} = \text{"OK"}$$

Check Anchor Attachment to Wall

Check Moment Capacity of Connection Bars

Conservatively assume the entire wall is cantilevered about the footing, therefore consider only driving moments. Use total loads instead of loads per foot. Use 100% of soil weight. Must determine controlling anchor, since tributary width is variable, not necessarily the anchor at the tallest wall. Assume only top four connection bars resist tension. This assumption is consistent with HITEC p.D28.

$Mu_{anchor} := \max(Driving_{brg.1} \cdot trib_1, Driving_{brg.2} \cdot trib_2) = 215.957 \cdot kip \cdot ft$

$bar_{anchor} := 5$ size of bar

$diam_{anchor} := \frac{bar_{anchor}}{8} in = 0.625 \cdot in$

$As_{anchor} := \frac{\pi}{4} \cdot diam_{anchor}^2 = 0.307 \cdot in^2$

$n := 6$ Number of bars in tension

$b_{anchor} := t_{stem} = 6 \cdot in$ thickness of anchor stem

$h_{stem} := 3ft + 6in$ height of anchor stem

$d_{anchor} := 30.5in$ distance from centroid of tension reinforcement extreme compression fiber.

Verify that f_y can be substituted for f_s in the equations of 5.7.3.2. This is allowed when $\frac{c}{d_s} \le 0.60$.

$c_{anchor} := \frac{n \cdot As_{anchor} \cdot f_y}{0.85 \cdot f_c \cdot \beta_1 \cdot b_{anchor}} = 5.414 \cdot in$ Simplified equation 5.7.3.1.2-4

$\frac{c_{anchor}}{d_{anchor}} = 0.178$ **This is less than 0.60 therefore f_y can be substituted for f_s**

$a_{anchor} := \beta_1 \cdot c_{anchor} = 4.331 \cdot in$

$Mn_{anchor} := n \cdot As_{anchor} \cdot f_y \cdot \left(d_{anchor} - \frac{a_{anchor}}{2}\right)$

$Mr_{anchor} := \phi_{moment} \cdot Mn_{anchor} = 234.708 \cdot kip \cdot ft$

$Mu_{anchor} = 215.957 \cdot kip \cdot ft$

$$Check_{AnchorFlexure} := \begin{cases} \text{"OK"} & \text{if } \frac{Mr_{anchor}}{Mu_{anchor}} \ge 1 \\ \text{"NG"} & \text{otherwise} \end{cases} = \text{"OK"}$$

Check Minimum Flexural Reinforcement (5.7.3.3.2)

$f_r = 0.537 \cdot ksi$ AASHTO 5.4.2.6

$I_{g.anchor} := \frac{1}{12} \cdot t_{stem} \cdot h_{stem}^3 = 3.704 \times 10^4 \cdot in^4$

$y_{t.anchor} := \frac{h_{stem}}{2} = 1.75\,ft$ Distance from centroid to extreme tension fibers. Conservatively ignore reinforcement.

$S_{c.anchor} := \frac{I_{g.anchor}}{y_{t.anchor}} = 1.764 \times 10^3 \cdot in^3$

$\gamma_3 := 0.67$ 0.67 = Factor for Grade 60 ASTM A615 rebar

$\gamma_1 := 1.2$ 1.2 = Factor for precast segmental structures

$M_{cr.anchor} := \gamma_3 \cdot \gamma_1 \cdot S_{c.anchor} \cdot f_r = 63.426 \cdot kip \cdot ft$ Simplified AASHTO Eq 5.7.3.3.2-1

$1.33Mu_{anchor} \cdot b_w = 287.223\,ft \cdot kip \cdot ft$

$$Check_{MinSteelAnchor} := \begin{cases} \text{"OK"} & \text{if } Mr_{anchor} \geq \min(1.33Mu_{anchor}, M_{cr.anchor}) \\ \text{"NG"} & \text{otherwise} \end{cases} = \text{"OK"}$$

Check Minimum Steel for Temperature and Shrinkage (11.6.1.5.1 & 5.10.8)

$$As_{min.anchor} := \max\left[0.11\frac{in^2}{ft}, \min\left[0.60\frac{in^2}{ft}, \frac{1.30 \cdot b_{anchor} \cdot h_{stem}}{2 \cdot (b_{anchor} + h_{stem}) \cdot \frac{f_y}{ksi}}\right]\right] = 0.6 \cdot \frac{in^2}{ft}$$

$As_{min.anchor} \cdot h_{stem} = 2.1 \cdot in^2$

$As_{anchor} \cdot (n + 2) = 2.454 \cdot in^2$ Account for extra two bars in compression face

Check Hook Development of Connection Steel in Wall

Per 5.10.2, A standard hook with a 180 degree bend shall have a 4*db extension, but not less than 2.5 inches. Per 5.12.3, Cover beyond free end of bar shall be 2 inches.

$$l_{hb} := \frac{38.0 diam_{anchor}}{\sqrt{\left(\frac{f_c}{ksi}\right)}} = 10.621 \cdot in$$

Basic development length for a Grade 60 bar with a standard hook (AASHTO 5.11.2.4.1)

Modification Factors to be applied to the Basic Development Length (AASHTO 5.11.2.4.2)

$M_{strength} := 1$ — Increase by fy/60 for yield strength greater than 60ksi

$M_{cover} := 0.7$ — 0.7 if side cover normal to plane of hook is at least 2.5 inches AND Cover beyond hook is at least 2.0in

$M_{stirrups} := 1.0$ — 0.8 if hook is enclose in with ties or stirrups as specified in 5.11.2.4.2

$M_{As} := 1.0$ — Conservatively assume entire area of steel provided is required.

$M_{lightweight} := 1.0$ — 1.3 if lightweight concrete is used.

$M_{epoxy} := 1.0$ — 1.2 if epoxy rebar is used.

$$M := M_{strength} \cdot M_{cover} \cdot M_{stirrups} \cdot M_{As} \cdot M_{lightweight} \cdot M_{epoxy} = 0.7$$

$$l_{dh} := \max(6in, 8 \cdot diam_{anchor}, M \cdot l_{hb}) = 7.435 \cdot in$$

$$t_{wall.min} := cover_{wall} + l_{dh} = 9.435 \cdot in$$

$$Check_{Wall.Thickness} := \begin{cases} \text{"OK"} & \text{if } t_{wall} \geq t_{wall.min} \\ \text{"NG"} & \text{otherwise} \end{cases} = \text{"OK"}$$