MILLER CONSTRUCTION, INC.

P.O. BOX 86 ASCUTNEY BLVD WINDSOR, VERMONT 05089-0086

TELEPHONE (802) 674-5525 / FAX (802) 674-5245

TRANSMITTAL

TO: Kristin Higgins Vermont Agency of Transportation	DATE	PROJECT NO.
	6/5/2013	Jamaica ER-BRF 015-1 (23)

XX WE ENCLOSE THE FOLLOWING: _____ UNDER SEPARATE COVER WE ARE SENDING THE FOLLOWING

COPIES	NUMBER	DESCRIPTION	CODE
1		Rail Shop Drawings	H
1		Rail WPS	H

CODE:

A FOR INITIAL APPROVAL
B FOR FINAL APPROVAL
C APPROVED AS NOTED-RESUBMISSION REQUIRED
D APPROVED AS NOTED-RESUBMISSION NOT REQUIRED
E DISAPPROVED-RESUBMIT
F QUOTATION REQUESTED
G APPROVED
H FOR APPROVAL
I AS REQUESTED OR REQUIRED
J FOR USE IN ERECTION
K LETTER FOLLOWS
L FOR FIELD CHECK
M FOR YOUR USE

BY: Paul J Holberg

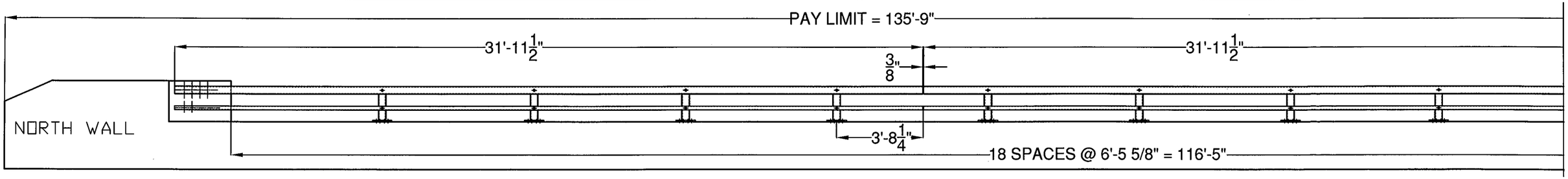

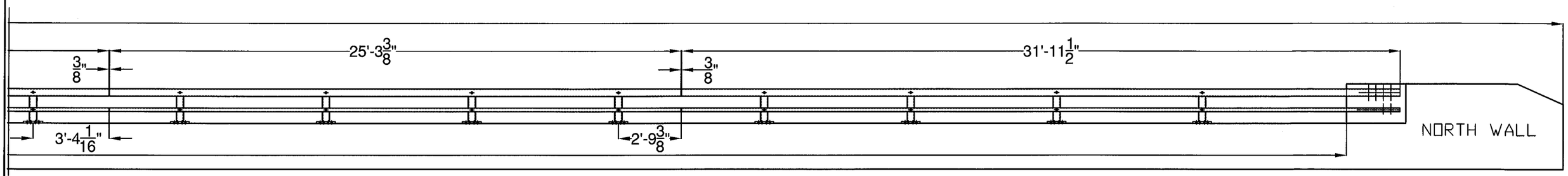

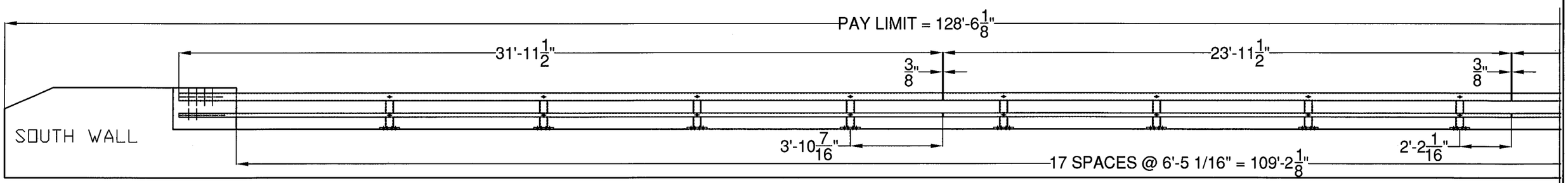

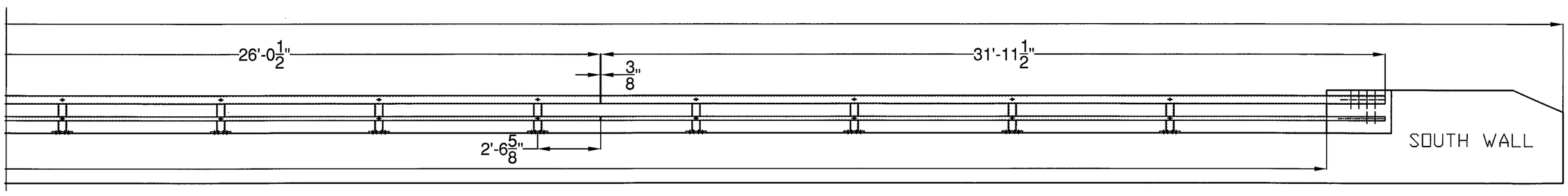

NOTE: DRAWING DEPICTS A SLIGHT RADIUS. ADVISE RADIUS IF A SHOP CURVED RADIUS IS REQUIRED.

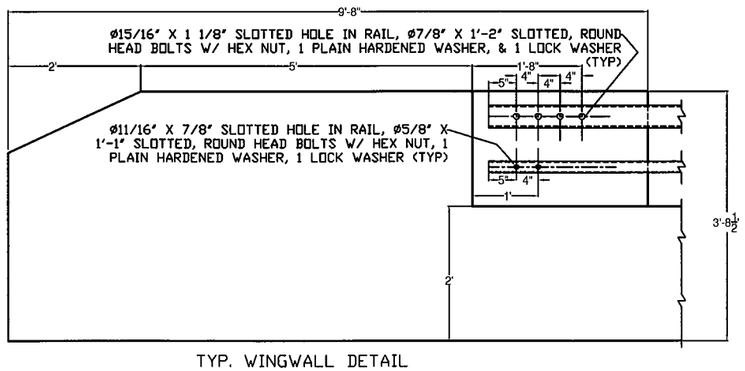

TYP. WINGWALL DETAIL

ITEM #: 525.45

FR Lafayette - JAMAICA, EM13-016

SHEET 1 OF 2

APPROVED BY:

BRIDGE RAIL DETAILS SHEET

EM13-006, JAMAICA ER BRF 015-1 (23)

TOWN OF JAMAICA, WINDHAM COUNTY, VT RTE 30 (MINOR ARTERIAL), BRIDGE NO : 30

REV	NO.	DATE	DESCRIPTION	BY	REV	NO.	DATE	DESCRIPTION	BY

ELDERLEE, INC.
OAKS CORNERS, NEW YORK 14518
E-Mail: dlong@elderlee.com
Tel: 315-789-6670 Fax: 315-789-6615

AISC CERTIFIED FABRICATOR

DRAWN	E.P.	5/30/13
CHECKED	D.L.	5/31/13
APPROVED	.	.
SCALE	SCHEMATIC	
DRAWING NO.	FR LAFAYETTE - JAMAICA	

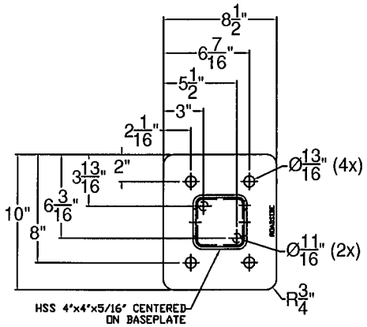

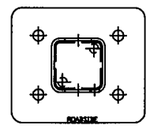

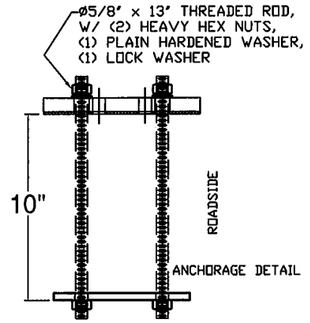

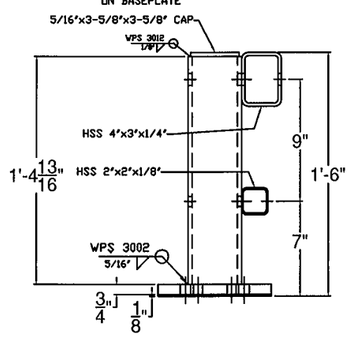

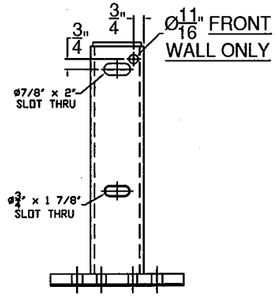

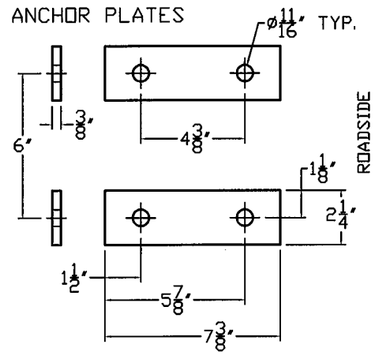

BILL OF MATERIAL

QTY	DESCRIPTION	ASTM DESIGNATION
33	TWO RAIL POST	A572 Gr. 50
5	4" X 3" X 1/4" RAIL @ 31'-11 1/2"	A500 Gr. B
1	4" X 3" X 1/4" RAIL @ 25'-3 3/8"	A500 Gr. B
1	4" X 3" X 1/4" RAIL @ 23'-11 1/2"	A500 Gr. B
1	4" X 3" X 1/4" RAIL @ 26'-0 1/2"	A500 Gr. B
5	2" X 2" X 1/8" RAIL @ 31'-11 1/2"	A500 Gr. B
1	2" X 2" X 1/8" RAIL @ 25'-3 3/8"	A500 Gr. B
1	2" X 2" X 1/8" RAIL @ 23'-11 1/2"	A500 Gr. B
1	2" X 2" X 1/8" RAIL @ 26'-0 1/2"	A500 Gr. B
6	1-1/2" X 1-1/2" FIX. SPL BAR @ 2' 4"	A572 Gr. 50
6	2-1/4" X 3-1/4" FIX. SPL. BAR @ 2' 4"	A500 Gr. B, A36
66	3/8" X 2 1/4" X 7 3/8" ANCHOR PLATES	A36
132	Ø 5/8" X 13" ANCHOR STUDS	A449 Gr. 1
264	Ø 5/8" HEAVY HEX NUTS & FLAT WASHERS	A563 & F436
33	Ø 5/8" X 7 1/2" ROUND HEAD BOLT, NUT, F.W., & L.W.	A325, A563, F436, & ASME B18.21.1
33	Ø 3/4" X 8 1/2" ROUND HEAD BOLT, NUT, F.W., & L.W.	A325, A563, F436, & ASME B18.21.1
24	Ø 5/8" X 3" HEX BOLT, NUT, F.W., & L.W.	A325, A563, F436, & ASME B18.21.1
24	Ø 7/8" X 5 1/2" HEX BOLT, NUT, F.W., & L.W.	A325, A563, F436, & ASME B18.21.1
8	Ø 5/8" X 13" SLOTTED, ROUND HEAD BOLT, NUT, F.W., & L.W.	A325, A563, F436, & ASME B18.21.1
16	Ø 7/8" X 14" SLOTTED, ROUND HEAD BOLT, NUT, F.W., & F.W.	A325, A563, F436, & ASME B18.21.1
10	Ø 5/8" X 5 1/2" HEX BOLT, NUT, F.W., & L.W.	A325, A563, F436, & ASME B18.21.1
10	DELINEATORS	ALUMINUM

Ø15/16" THRU TUBE & SPLICE BAR, Ø7/8"X5 1/2" HEX BOLT & NUT, W/ (1) PLAIN HARDENED WASHER & (1) LOCK WASHER (4 PLACES)

TOP RAIL FIXED SPLICE DETAIL

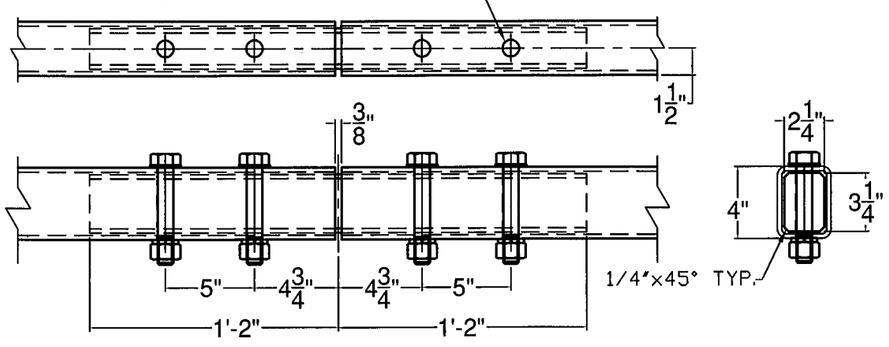

Ø11/16" THRU TUBE & SPLICE BAR, Ø5/8"X3" HEX BOLT & NUT, W/ (1) PLAIN HARDENED WASHER & (1) LOCK WASHER (4 PLACES)

BOTTOM RAIL FIXED SPLICE DETAIL

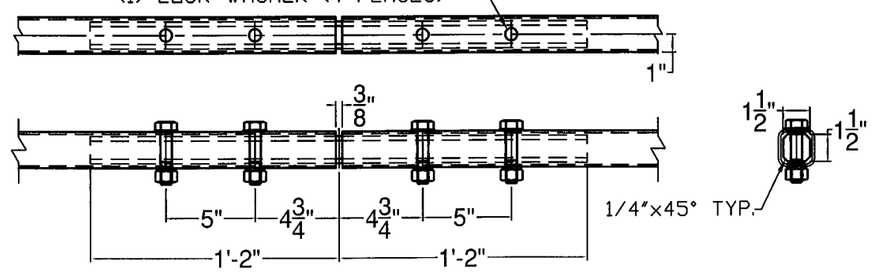

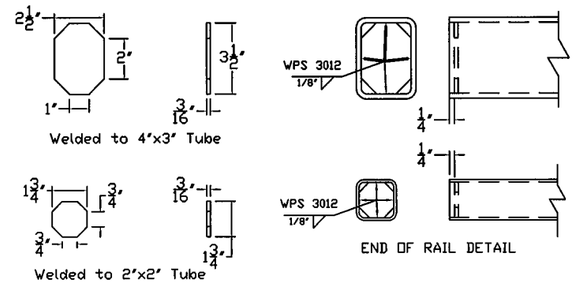

NOTES:

1. ALL WORK AND MATERIALS SHALL CONFORM TO SECTION 525/525.02/732.04.
2. PRIOR TO GALVANIZING THE ASSEMBLED POST, GRIND ALL EDGES TO A MINIMUM RADIUS OF 1/16".
3. ALL POSTS SHALL BE SET NORMAL TO GRADE.
4. SECTIONS OF RAIL TUBE SHALL BE ATTACHED TO A MINIMUM OF TWO BRIDGE POSTS AND PREFERABLY TO AT LEAST 4 POSTS.
5. HOLES IN RAILS FOR TUBE ATTACHMENT, MAY BE FIELD-DRILLED. HOLES SHALL BE COATED WITH AN APPROVED ZINC-RICH PAINT PRIOR TO INSTALLATION.
6. BOLTS SHALL BE TORQUED SNUG TIGHT (APPROXIMATELY 100 FT-LB).
7. RAIL TUBES SHALL BE ATTACHED USING 3/4" FULL DIAMETER BODY ASTM A449 (TYPE I) ROUND HEAD BOLTS INSERTED THROUGH THE FACE OF THE TUBE.
8. SEE STANDARD DRAWING G-I FOR DETAILS OF DELINEATORS. A DELINEATOR SHALL BE INSTALLED AT 30 FOOT SPACING OR THE NEAREST POST. WHITE IS TO BE INSTALLED ON THE DRIVER'S RIGHT. FOR ONE WAY BRIDGES, YELLOW IS TO BE INSTALLED ON THE DRIVER'S LEFT. PAYMENT FOR DELINEATORS SHALL BE INCIDENTAL TO OTHER ITEMS.
9. AESTHETIC TREATMENT TYPE SHALL BE APPLIED AS SPECIFIED IN THE CONTRACT PLANS. IF NONE IS SPECIFIED IT SHALL NOT BE USED. AESTHETIC TREATMENT DETAILED ON THIS SHEET MAY ALSO BE APPLIED ON THE FASCIA SIDE OF THE RAIL, IF SPECIFIED IN THE CONTRACT PLANS.
10. BRIDGE RAILING SHALL HAVE A RUBBED FINISH IN ACCORDANCE WITH SECTION 501.
11. THIS RAILING MEETS THE REQUIREMENTS FOR A NCHRP REPORT 350 TL-4 SERVICE LEVEL.
12. HOLES FOR MOUNTING DELINEATORS TO BE FIELD DRILLED.

ITEM #: 525.45

FR Lafayette - JAMAICA, EM13-016

SHEET 2 OF 2

APPROVED BY:

BRIDGE RAIL DETAILS SHEET

EM13-006, JAMAICA ER BRF 015-1 (23)

TOWN OF JAMAICA, WINDHAM COUNTY, VT RTE 30 (MINOR ARTERIAL), BRIDGE NO : 30

REV	NO.	DATE	DESCRIPTION	BY	REV	NO.	DATE	DESCRIPTION	BY

ELDERLEE, INC.
OAKS CORNERS, NEW YORK 14518
E-Mail: dlong@elderlee.com
Tel: 315-789-6670 Fax: 315-789-6615

AISC CERTIFIED FABRICATOR

DRAWN	E.P.	5/30/13
CHECKED	D.L.	5/31/13
APPROVED	.	.
SCALE	SCHEMATIC	
DRAWING NO.	FR LAFAYETTE - JAMAICA	

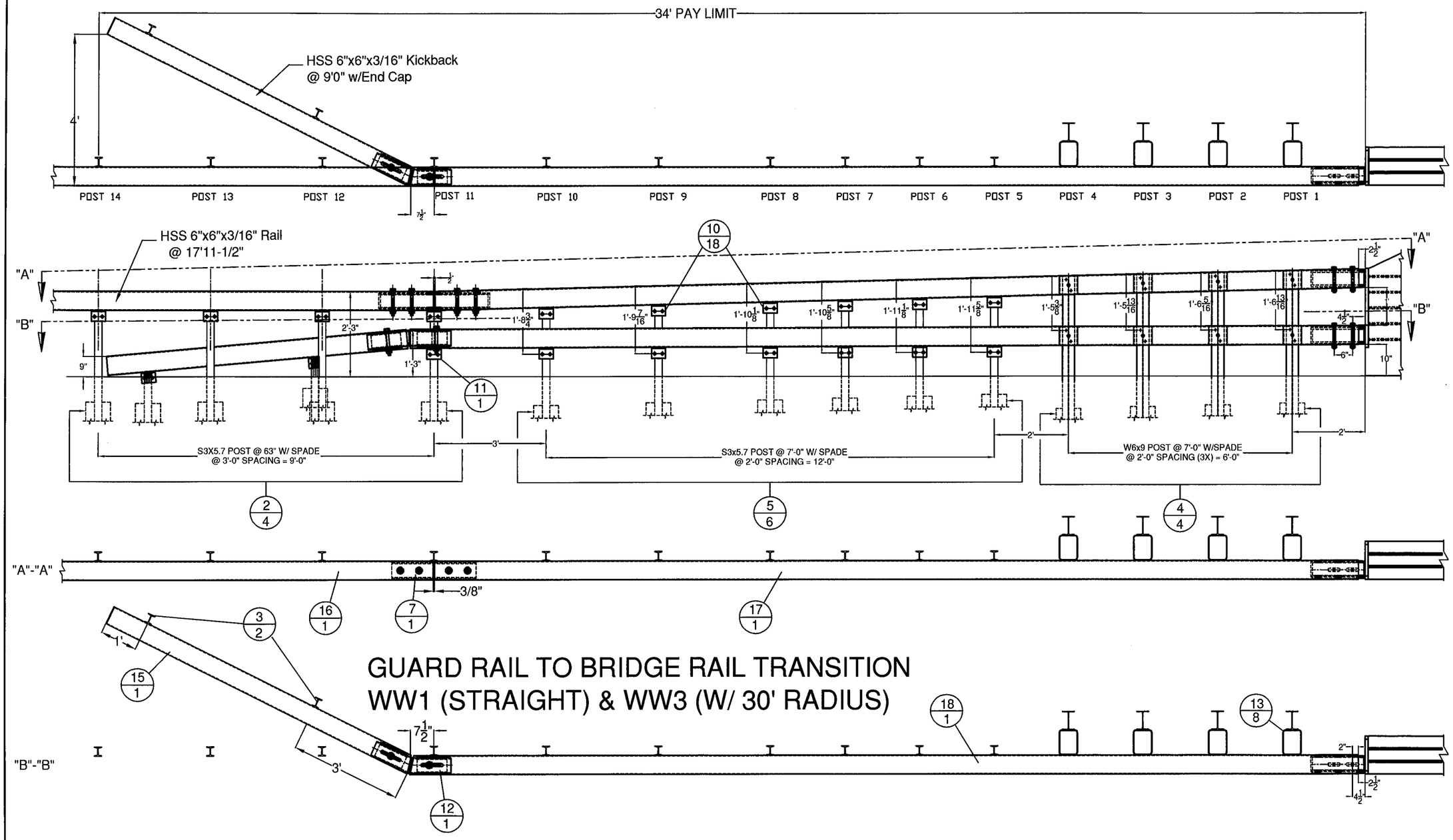

GUARD RAIL TO BRIDGE RAIL TRANSITION
WW1 (STRAIGHT) & WW3 (W/ 30' RADIUS)

RAIL BENDING PROCEDURE:
RADII GREATER THAN 16' TO BE CURVED ON A TUBE BENDING MACHINE, RADII LESS THAN 16' TO BE "PIE CUT" AND WELDED.

ITEM #: 900.620 (TRANSITION) FR Lafayette - JAMAICA, EM13-016

SHEET 1 OF 8

APPROVED BY:

BRIDGE RAIL DETAILS SHEET

EM13-006, JAMAICA ER BRF 015-1 (23)

TOWN OF JAMAICA, WINDHAM COUNTY, VT RTE 30 (MINOR ARTERIAL), BRIDGE NO : 30

REV	NO.	DATE	DESCRIPTION	BY	REV	NO.	DATE	DESCRIPTION	BY

ELDERLEE, INC.
OAKS CORNERS, NEW YORK 14518
E-Mail: dlong@elderlee.com
Tel: 315-789-6670 Fax: 315-789-6615

AISC CERTIFIED FABRICATOR

DRAWN	E.P.	5/30/13
CHECKED	D.L.	5/31/13
APPROVED	.	.
SCALE	SCHEMATIC	
DRAWING NO.	FR LAFAYETTE - JAMAICA	

BILL OF MATERIALS, (EACH) WW1 & WW3 CORNERS

ITEM #	QTY.	DESCRIPTION	MATERIAL (ASTM)
2	4	3' I-POST, PUNCH 8', & 20' W/SPD @ 63' LG	A572 Gr. 50
3	2	3' I-END POST W/SPD @ 3'-8' LG	A572 Gr. 50
4	4	W6X9 POST @ 7' W/SPD & 5/8' HOLES (SPACING VARIES)	A572 Gr. 50
5	6	3' I-POST, PUNCH 8' & 20', W/8X32' SPADE @7' (SPACING VARIES)	A572 Gr. 50
7	1	HSS 5X5 TUBE SPLICE @27' LG W/ 1/4' SHIMS	A500 Gr. B / A572 Gr 50
10	18	REG BB SHELF ANGLES @ 4-1/2'	A572 Gr. 50
11	1	DWY BB SHELF ANGLES @ 4-1/2'	A572 Gr. 50
12	1	HSS 5X5 DBL BEND TUBE SPL @ 28' LG	A500 Gr. B / A572 Gr 50
13	8	HSS 6X8' TRANS. TUBE B/O @ 6' LG	A500 Gr. B
15	1	HSS 6X6' BB @ 9'-0' KICKBACK, W/ CAP	A500 Gr. B / A36
16	0.5	HSS 6X6' BB @ 17'-11 1/2', DRILL 3' CC	A500 Gr. B
17	1	HSS 6X6' BB TOP TRANS @ 24'-9 5/16' LG	A500 Gr. B
18	1	HSS 6X6' BB BTM TRANS @ 25'-5 3/16' LG	A500 Gr. B
19	17	3/8' X 7 1/2' BOLT, NUT, & 2 FW	A307, A563, F436
20	19	1/2' x 1-1/2' BOLT, NUT, & FW	A307, A563, F436
21	16	1/2' x 1-1/2' BOLT, NUT, 2 FW & LW	A307, A563, F436, ASME B18.21.1
23	8	3/4' X 7-1/2' BOLT, NUT, 2 FW & LW	A325, A563, F436, ASME B18.21.1
24	8	7/8' X 8' CARR BOLT, NUT, FW & LW	A307, A563, F436, ASME B18.21.1
25	2	3/4' X 8' BOLT, NUT, 2 FW, & LW	A325, A563, F436, ASME B18.21.1
26	1	PARAPET WALL CONNECTION	A572 Gr.50, A615 Gr.60, A500 Gr. B

NOTE: ITEMS 16, 17 & 18 TO HAVE 30' RADIUS FOR WINGWALL #3

HARDWARE NOTES

ITEM #	FUNCTION
19	BOLT RAIL TO SHELF ANGLE (ITEM #10)
20	BOLT SHELF ANGLE (ITEM #'S 10 & 11) TO POST
21	BOLT BLOCK-OUTS (ITEM # 13) TO HEAVY POST (ITEM # 4)
23	(4) PER SPLICE TUBING (ITEM # 7), & (4) PER PARAPET WALL CONNECTION (ITEM # 26)
24	BOLT RAIL (ITEMS #'S 17, & 18 TO BLOCK-OUTS (ITEM # 13) [WHERE FASTENED]
25	BOLT DOUBLE BEND SPLICE TUBE (ITEM #12) TO RAIL (ITEM #18) & KICKBACK (ITEM #15) & ITEM #11)

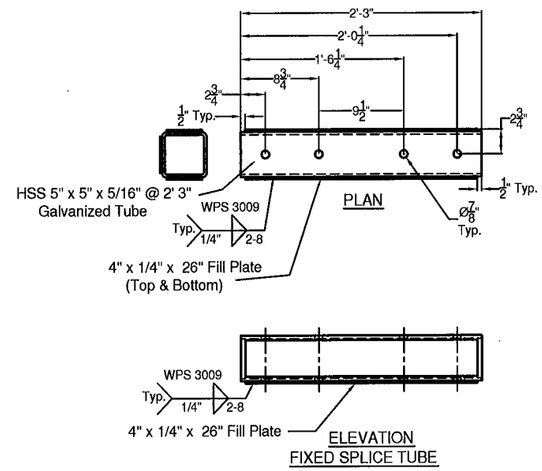

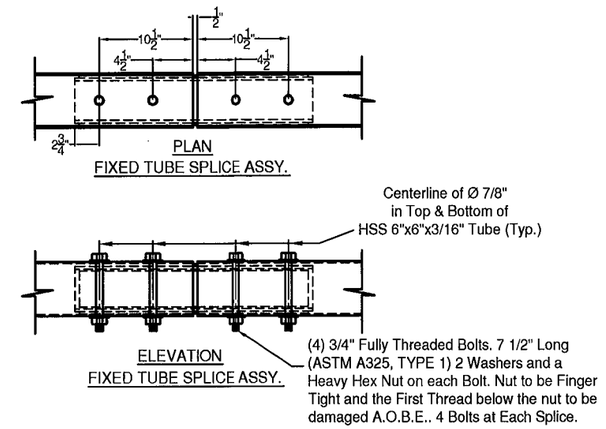

(ITEM # 7)

SPLICE TUBE - FIXED

BILL OF MATERIALS

ITEM #	QTY	DESCRIPTION	ASTM #
1	1	DBL TUBE WALL PLATE - 1' X 12' x 25'	ASTM A572 Gr. 50
2	10	RAW, Ø5/8' REBAR @ 36'	A615, Gr. 60
3	2	5' X 5' X 5/16' TUBE W/ SLOTS @ 18'	ASTM A500 Gr. B
4	2	SHIM PL 1/2' X 4' X 17' W/ SLOTS	ASTM A36(ASTM A709 Gr. 36)CVN
5	2	SHIM PL 1/2' X 4' X 17' (W/O SLOTS)	ASTM A36(ASTM A709 Gr. 36)CVN

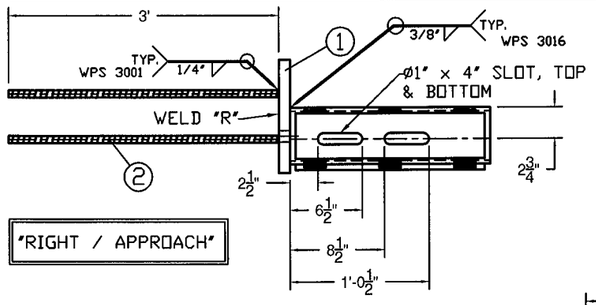

PROTRUSIONS CAUSED BY WELDING OR GALVANIZING ARE NOT PERMITTED ON THE SPLICE TUBES AND FILL PLATES

'Left Shown'
Wing Wall 1 = 'Left'
Wing Wall 2 = 'Right'
Wing Wall 3 = 'Right'
Wing Wall 4 = 'Left'

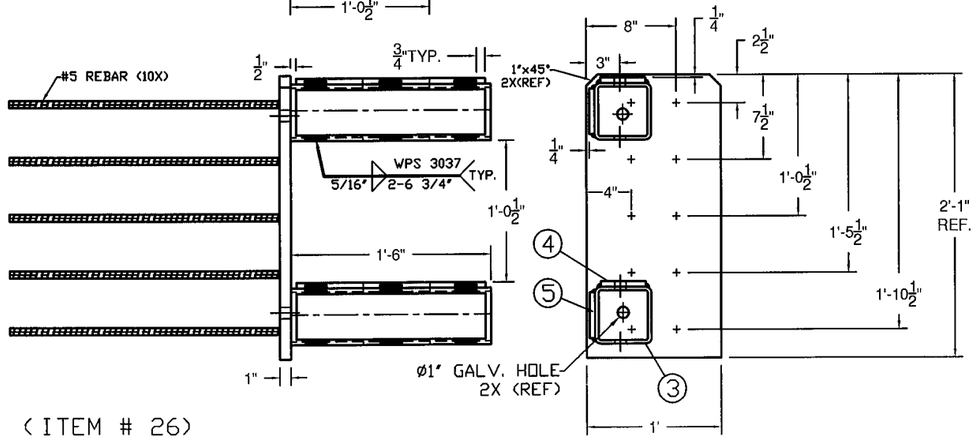

(ITEM # 26)

BACK VIEW

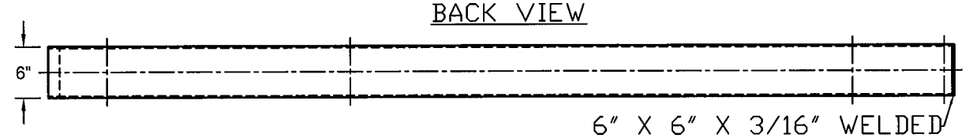

6" X 6" X 3/16" WELDED
END CAP, W/CUT CORNERS

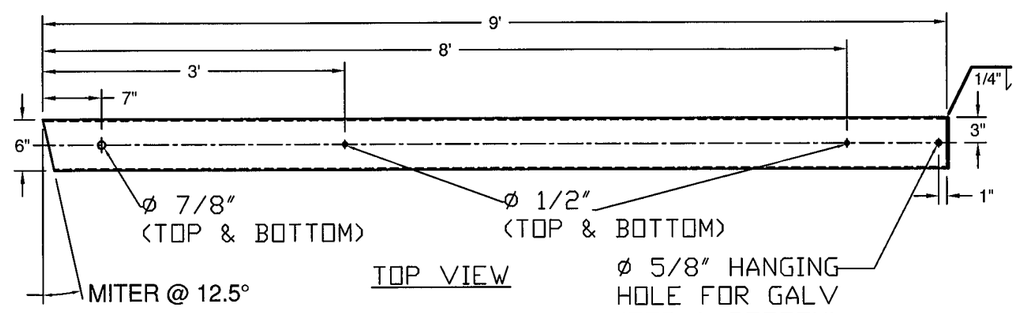

TOP VIEW

(ITEM # 15)

ITEM #: 900.620 (TRANSITION) FR Lafayette - JAMAICA, EM13-016

SHEET 2 OF 8

APPROVED BY:

BRIDGE RAIL DETAILS SHEET

EM13-006, JAMAICA ER BRF 015-1 (23)

TOWN OF JAMAICA, WINDHAM COUNTY, VT RTE 30 (MINOR ARTERIAL), BRIDGE NO : 30

REV	NO.	DATE	DESCRIPTION	BY	REV	NO.	DATE	DESCRIPTION	BY

ELDERLEE, INC.
OAKS CORNERS, NEW YORK 14518
E-Mail: dlong@elderlee.com
Tel:315-789-6670 Fax:315-789-6615

AISC CERTIFIED FABRICATOR

DRAWN	E.P.	5/30/13
CHECKED	D.L.	5/31/13
APPROVED	.	.
SCALE	SCHEMATIC	
DRAWING NO.	FR LAFAYETTE - JAMAICA	

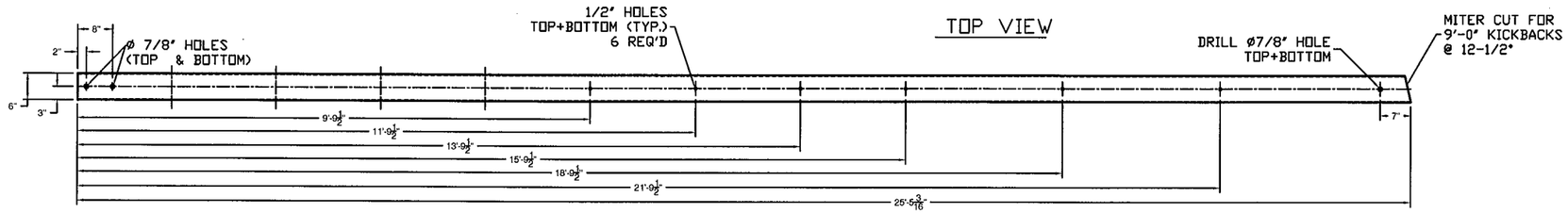

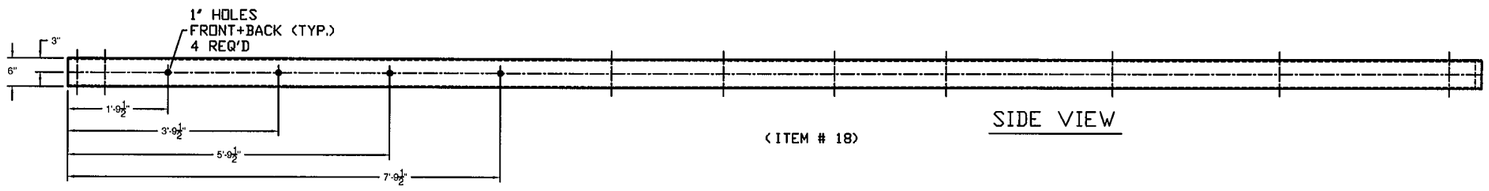

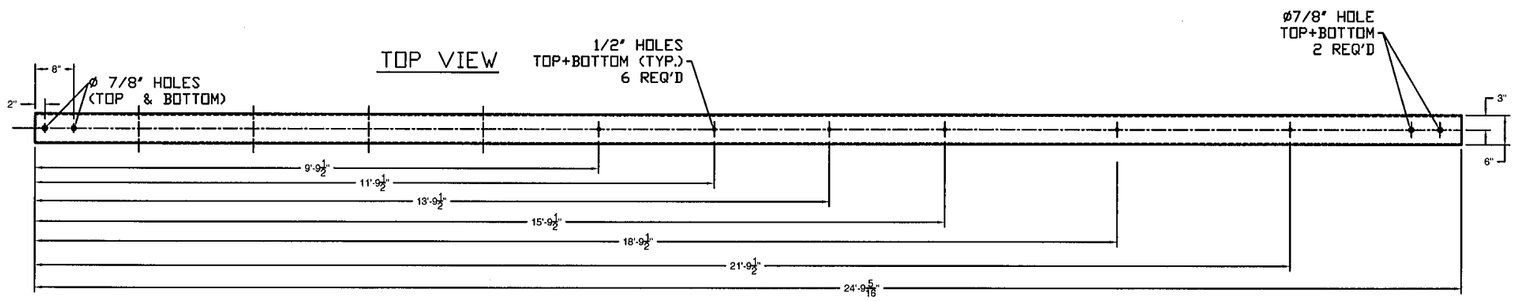

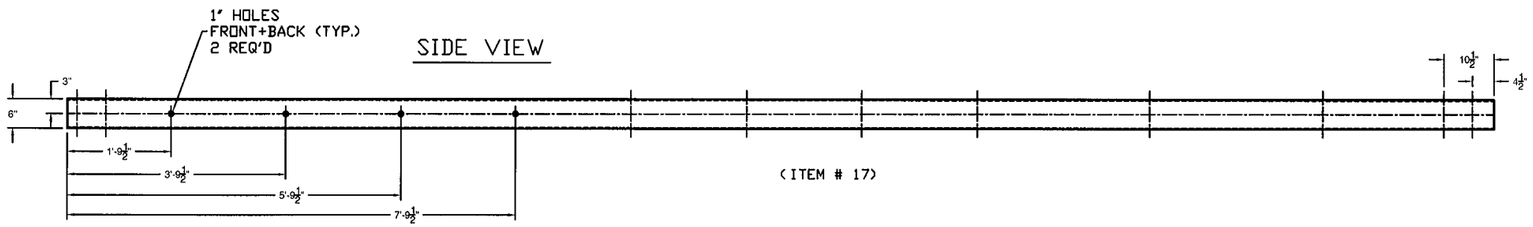

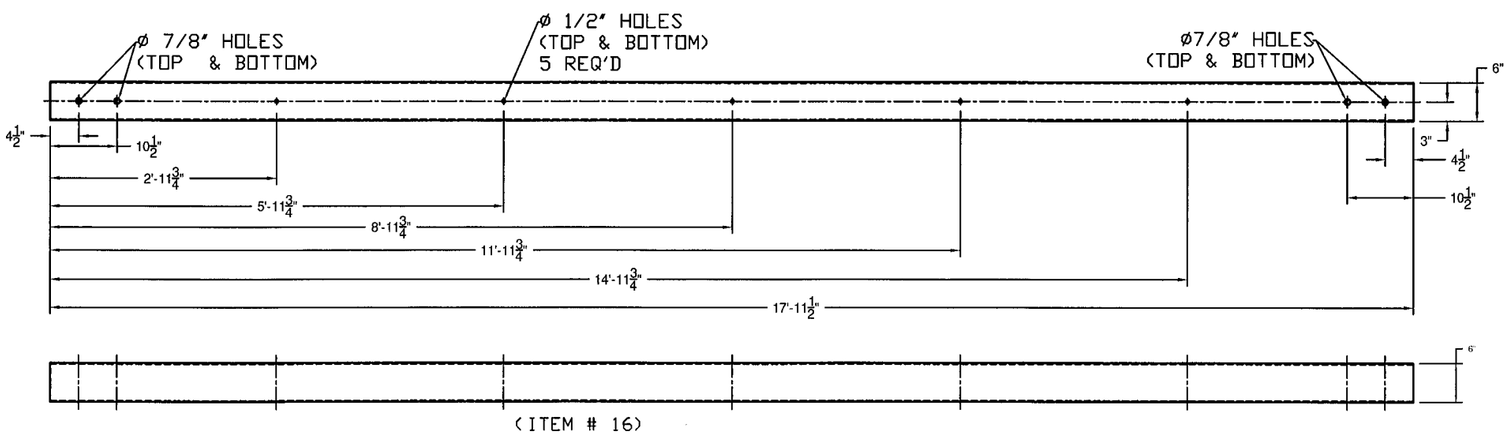

PLAN VIEW

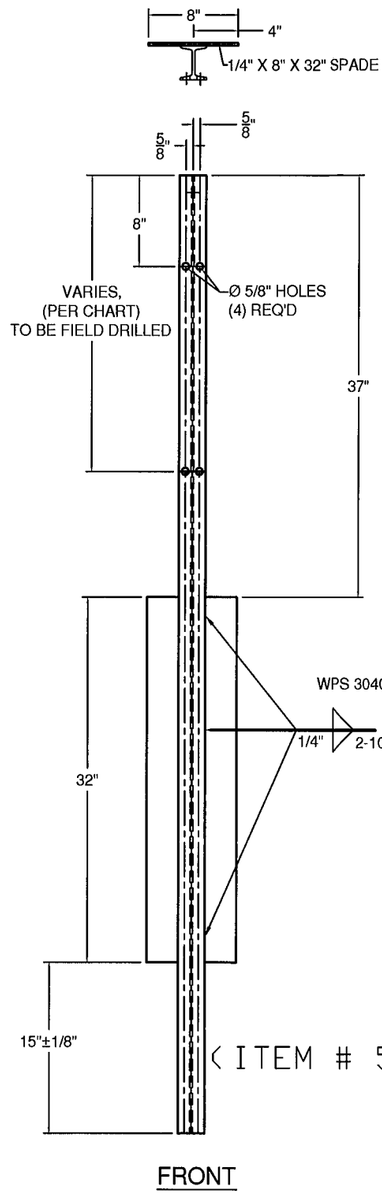

HOLE POSITION CHART	
POST	LENGTH
5	1'-11 5/8"
6	1'-11 1/8"
7	1'-10 5/8"
8	1'-10 1/8"
9	1'-9 7/16"
10	1'-8 3/4"

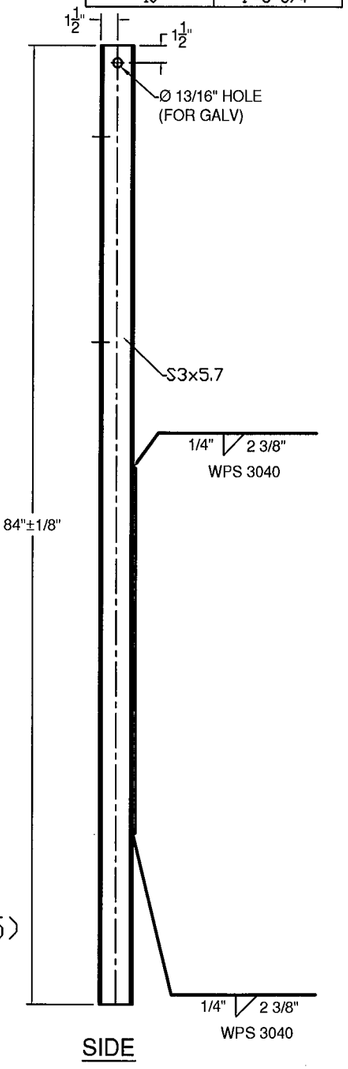

ITEM #: 900.620 (TRANSITION) FR Lafayette - JAMAICA, EM13-016

SHEET 3 OF 8

APPROVED BY:

BRIDGE RAIL DETAILS SHEET

EM13-006, JAMAICA ER BRF 015-1 (23)

TOWN OF JAMAICA, WINDHAM COUNTY, VT RTE 30 (MINOR ARTERIAL), BRIDGE NO : 30

REV	NO.	DATE	DESCRIPTION	BY	REV	NO.	DATE	DESCRIPTION	BY

ELDERLEE, INC.
OAKS CORNERS, NEW YORK 14518
E-Mail: dlong@elderlee.com
Tel:315-789-6670 Fax:315-789-6615

AISC CERTIFIED FABRICATOR

DRAWN	E.P.	5/30/13
CHECKED	D.L.	5/31/13
APPROVED	.	.
SCALE	SCHEMATIC	
DRAWING NO.	FR LAFAYETTE - JAMAICA	

PLAN VIEW

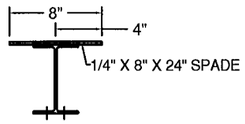

HOLE POSITION CHART	
POST	LENGTH
1	1'-6 13/16"
2	1'-6 5/16"
3	1'-5 13/16"
4	1'-5 5/16"

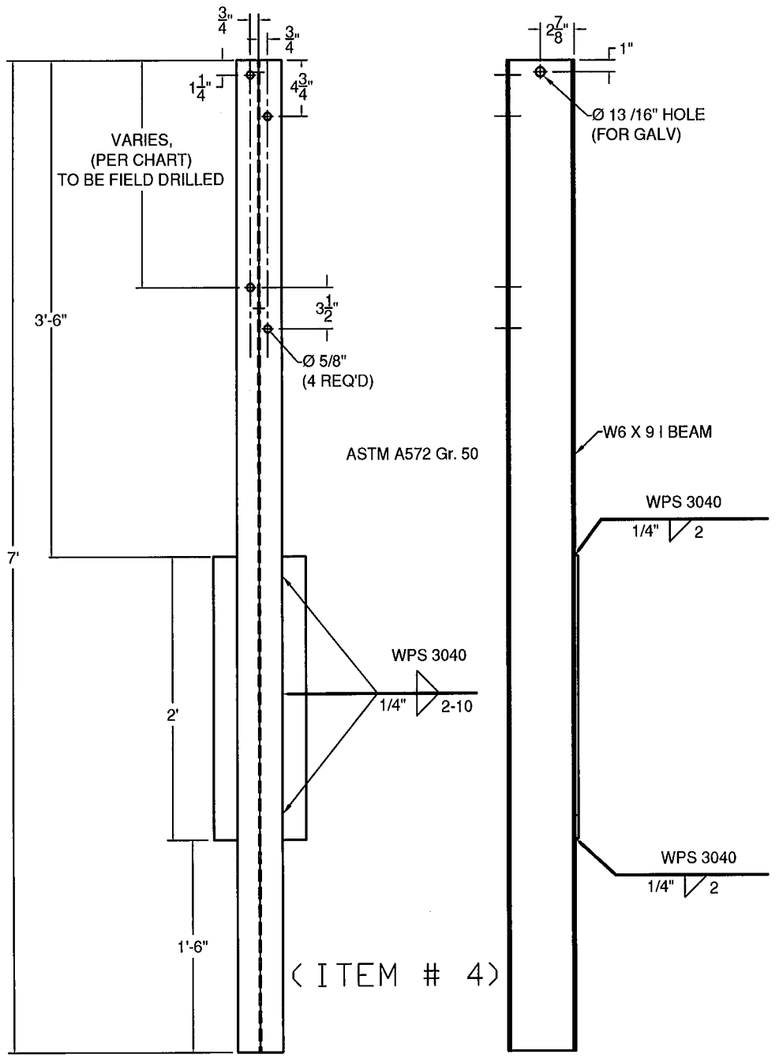

FRONT SIDE

PLAN VIEW

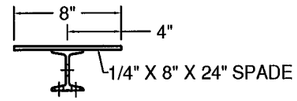

(ITEM # 2)

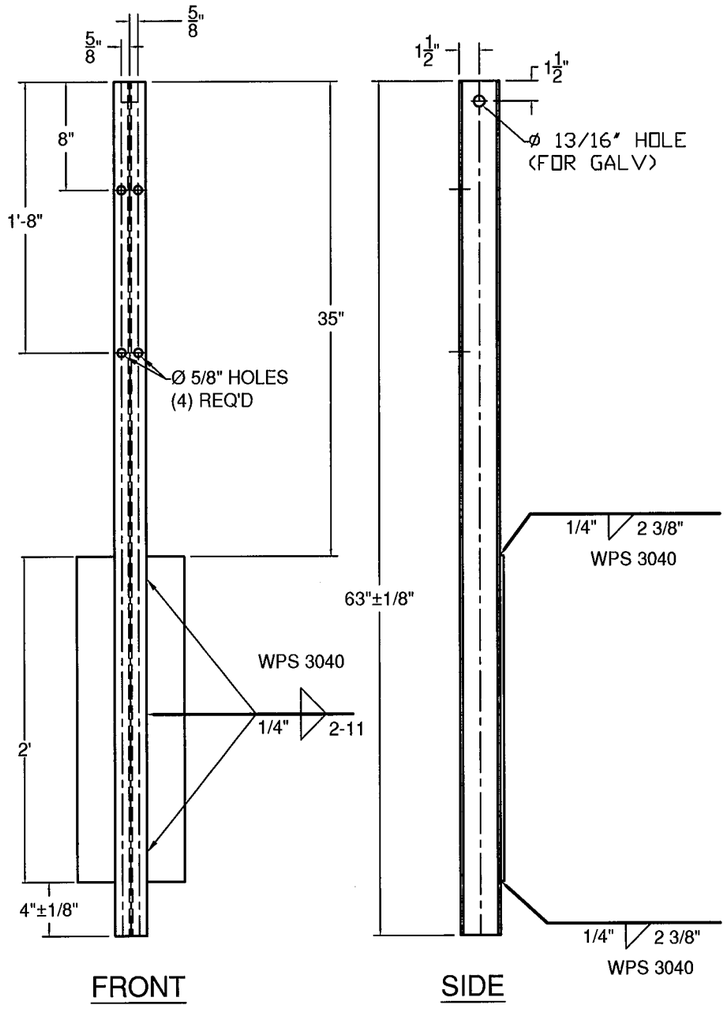

FRONT SIDE

PLAN VIEW

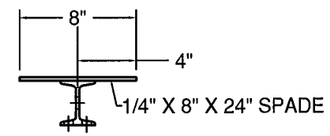

(ITEM # 3)

ASTM A572 Gr. 50

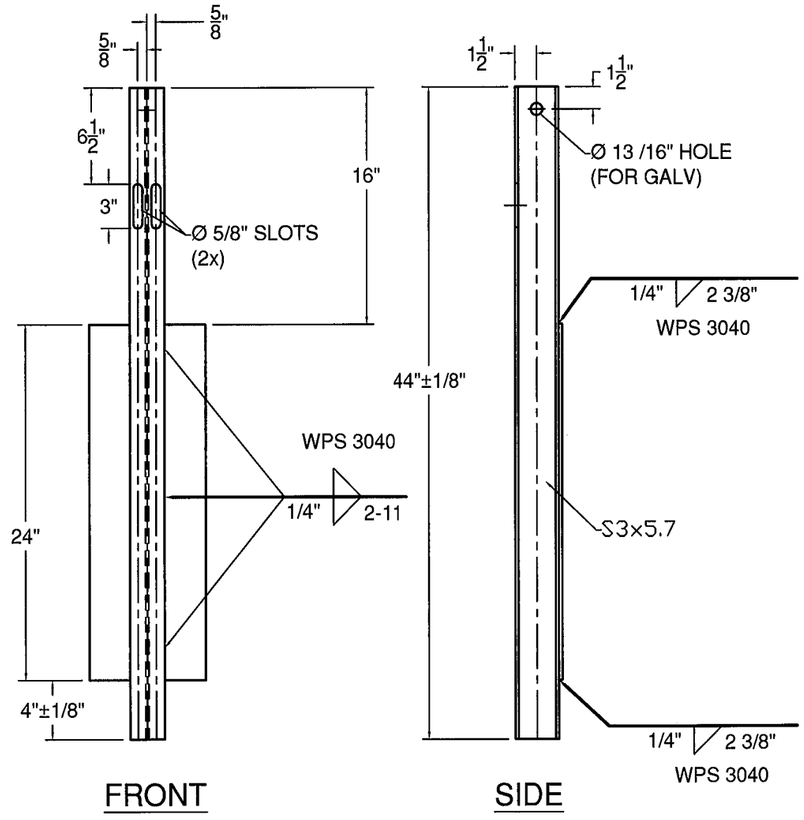

FRONT SIDE

ITEM #: 900.620 (TRANSITION) FR Lafayette - JAMAICA, EM13-016

SHEET 4 OF 8

APPROVED BY:

BRIDGE RAIL DETAILS SHEET

EM13-006, JAMAICA ER BRF 015-1 (23)

TOWN OF JAMAICA, WINDHAM COUNTY, VT RTE 30 (MINOR ARTERIAL), BRIDGE NO : 30

REV	NO.	DATE	DESCRIPTION	BY	REV	NO.	DATE	DESCRIPTION	BY

ELDERLEE, INC.
OAKS CORNERS, NEW YORK 14518
E-Mail: dlong@elderlee.com
Tel: 315-789-6670 Fax: 315-789-6615

AISC CERTIFIED FABRICATOR

DRAWN	E.P.	5/30/13
CHECKED	D.L.	5/31/13
APPROVED	.	.
SCALE	SCHEMATIC	
DRAWING NO.	FR LAFAYETTE - JAMAICA	

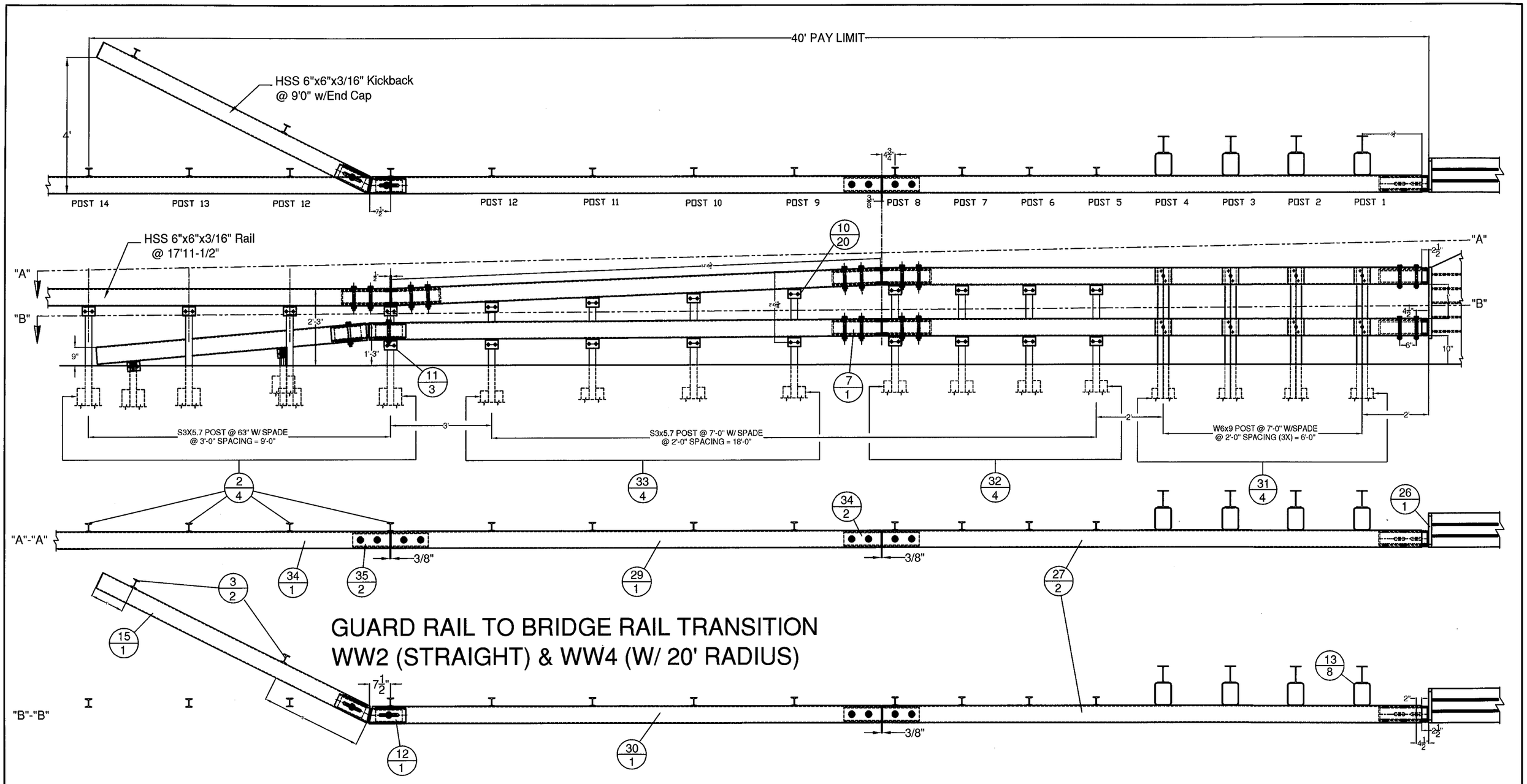

ITEM #: 900.620 (TRANSITION) FR Lafayette - JAMAICA, EM13-016

SHEET 5 OF 8

APPROVED BY:

BRIDGE RAIL DETAILS SHEET

EM13-006, JAMAICA ER BRF 015-1 (23)

TOWN OF JAMAICA, WINDHAM COUNTY, VT RTE 30 (MINOR ARTERIAL), BRIDGE NO : 30

REV	NO.	DATE	DESCRIPTION	BY	REV	NO.	DATE	DESCRIPTION	BY

ELDERLEE, INC.
OAKS CORNERS, NEW YORK 14518
E-Mail: dlong@elderlee.com
Tel: 315-789-6670 Fax: 315-789-6615

AISC CERTIFIED FABRICATOR

DRAWN	E.P.	5/30/13
CHECKED	D.L.	5/31/13
APPROVED	.	.
SCALE	SCHEMATIC	
DRAWING NO.	FR LAFAYETTE - JAMAICA	

BILL OF MATERIALS, (EACH) WW2 & WW4 CORNERS			
ITEM #	QTY.	DESCRIPTION	MATERIAL (ASTM)
2	4	3" I-POST, PUNCH 8", & 20" W/SPD @ 63" LG	A572 Gr. 50
3	2	3" I-END POST W/SPD @ 3'-8" LG	A572 Gr. 50
7	1	HSS 5X5 TUBE SPLICE @27" LG W/ 1/4" SHIMS	A500 Gr. B / A572 Gr 50
10	20	REG BB SHELF ANGLES @ 4-1/2"	A572 Gr. 50
11	3	DWY BB SHELF ANGLES @ 4-1/2"	A572 Gr. 50
12	1	HSS 5X5 DBL BEND TUBE SPL @ 28" LG	A500 Gr. B / A572 Gr 50
13	8	HSS 6X8" TRANS. TUBE B/□ @ 6" LG	A500 Gr. B
15	1	HSS 6X6" BB @ 9'-0" KICKBACK, W/ CAP	A500 Gr. B / A36
19	19	3/8" X 7 1/2" BOLT, NUT, & 2 FW	A307, A563, F436
20	19	1/2" x 1-1/2" BOLT, NUT, & FW	A307, A563, F436
21	16	1/2" x 1-1/2" BOLT, NUT, 2 FW & LW	A307, A563, F436, ASME B18.21.1
23	8	3/4" X 7-1/2" BOLT, NUT, 2 FW & LW	A325, A563, F436, ASME B18.21.1
24	8	7/8" X 8" CARR BOLT, NUT, FW & LW	A307, A563, F436, ASME B18.21.1
25	2	3/4" X 8" BOLT, NUT, 2 FW, & LW	A325, A563, F436, ASME B18.21.1
26	1	PARAPET WALL CONNECTION	A572 Gr.50, A615 Gr.60, A500 Gr. B
27	2	HSS 6X6" BB EXT. RAIL @ 16'-2 1/16"	A500 Gr. B
29	1	HSS 6X6" BB TOP TRANS @ 14'-6 5/8" LG	A500 Gr. B
30	1	HSS 6X6" BB TOP TRANS @ 15'-2 3/4" LG	A500 Gr. B
31	4	W6X9 POST @ 7' W/SPD & 5/8" HOLES	A572 Gr. 50
32	4	3" I-POST, PUNCH 8" & 26", W/8X32" SPADE @7'	A572 Gr. 50
33	4	3" I-POST, PUNCH 8" & VARIES", W/8X32" SPADE @7'	A572 Gr. 50
34	0.5	HSS 6X6" BB @ 17'-11 1/2", DRILL 3' CC	A500 Gr. B
35	2	HSS 5X5 2° BEND TUBE SPL @ 27" LG	PER BOM

HARDWARE NOTES	
ITEM #	FUNCTION
19	BOLT RAIL TO SHELF ANGLE (ITEM #10)
20	BOLT SHELF ANGLE (ITEM #'S 10 & 11) TO POST
21	BOLT BLOCK-OUTS (ITEM # 13) TO HEAVY POST (ITEM # 31)
23	(4) PER SPLICE TUBING (ITEM # 7, & 34), & (4) PER PARAPET WALL CONNECTION (ITEM # 26)
24	BOLT RAIL (ITEMS #'S 27, & 28 TO BLOCK-OUTS (ITEM # 13)
25	BOLT DOUBLE BEND SPLICE TUBE (ITEM #12) TO RAIL (ITEM #30) & KICKBACK (ITEM #15) & ITEM #11)

BILL OF MATERIALS			
ITEM #	QTY	DESCRIPTION	ASTM
1	1	5x5x5/16" TUBE @ 27"	A500 Gr. B
2	2	SHIM PL 3/8x4 @ 9 1/2" W/ HOLES	A572 Gr. 50
3	2	SHIM PL 3/8x4 @ 9 1/2"	A572 Gr. 50
4	3	IN-PR BACKER, 3/16"x1"x4"	A36
5	1	FORMED BACKER PLATE 3/16"x1"x4"	A36

(ITEM # 35)

NOTE: REQUIRES ONE AS SHOWN, ONE WITH BEND IN OPPOSITE DIRECTION

NOTE: PART IS SYMETRICAL

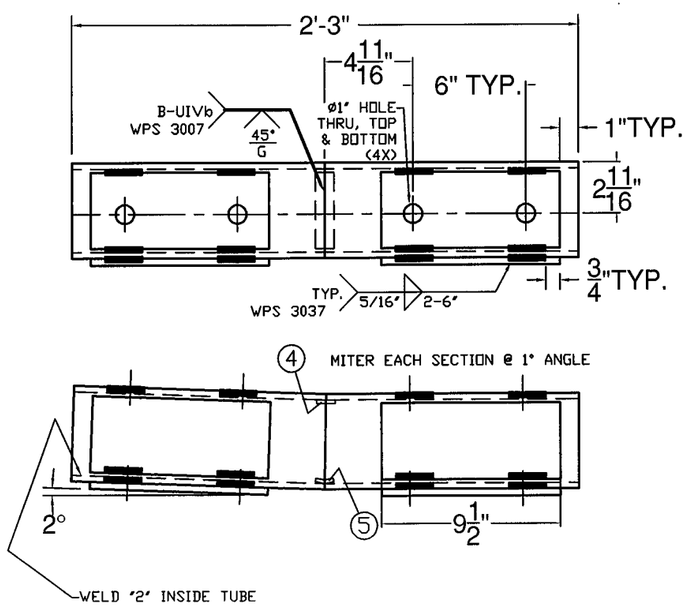

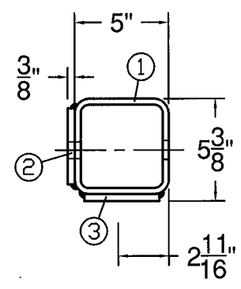

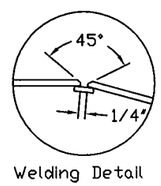

Welding Detail
WPS 3007

PLAN VIEW

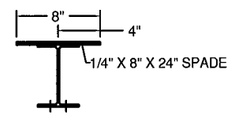

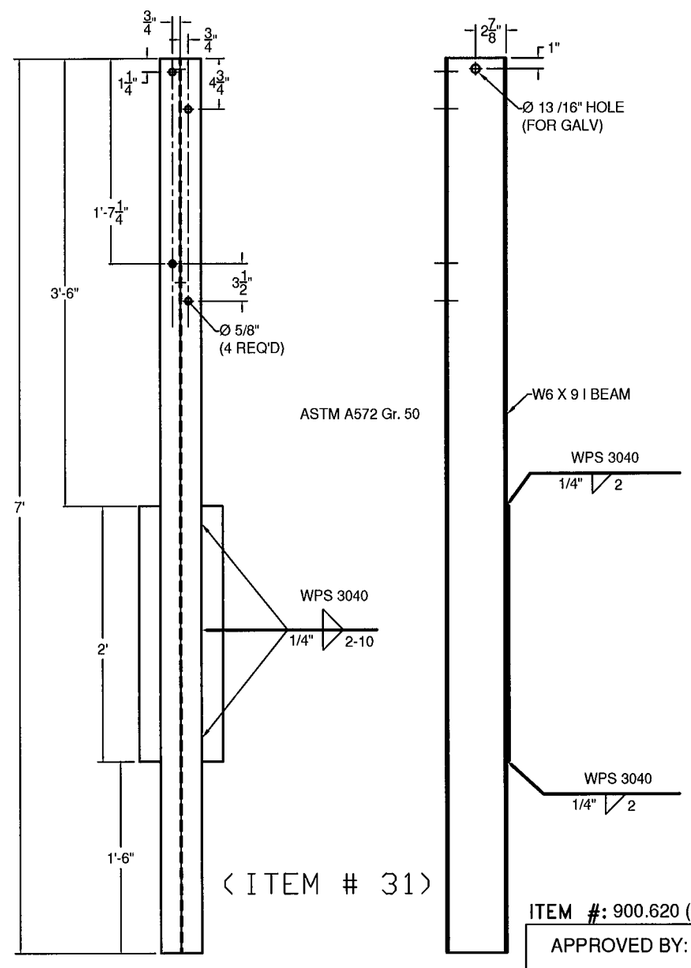

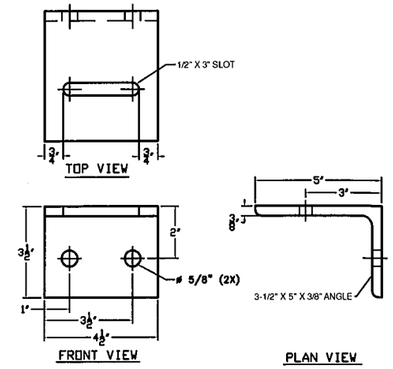

(ITEM # 10)

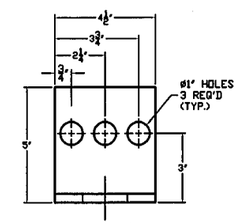

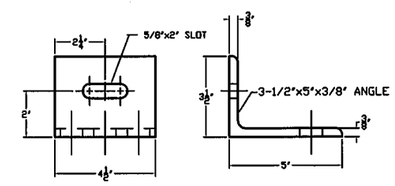

(ITEM # 11)

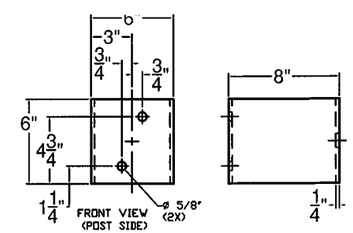

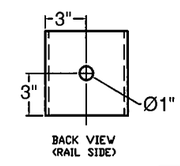

(ITEM # 13)

ITEM #: 900.620 (TRANSITION) FR Lafayette - JAMAICA, EM13-016

SHEET 6 OF 8

APPROVED BY:

BRIDGE RAIL DETAILS SHEET

EM13-006, JAMAICA ER BRF 015-1 (23)

TOWN OF JAMAICA, WINDHAM COUNTY, VT RTE 30 (MINOR ARTERIAL), BRIDGE NO : 30

REV	NO.	DATE	DESCRIPTION	BY	REV	NO.	DATE	DESCRIPTION	BY

ELDERLEE, INC.
OAKS CORNERS, NEW YORK 14518
E-Mail: dlong@elderlee.com
Tel: 315-789-6670 Fax: 315-789-6615

AISC CERTIFIED FABRICATOR

DRAWN	E.P.	5/30/13
CHECKED	D.L.	5/31/13
APPROVED	.	.
SCALE	SCHEMATIC	
DRAWING NO.	FR LAFAYETTE - JAMAICA	

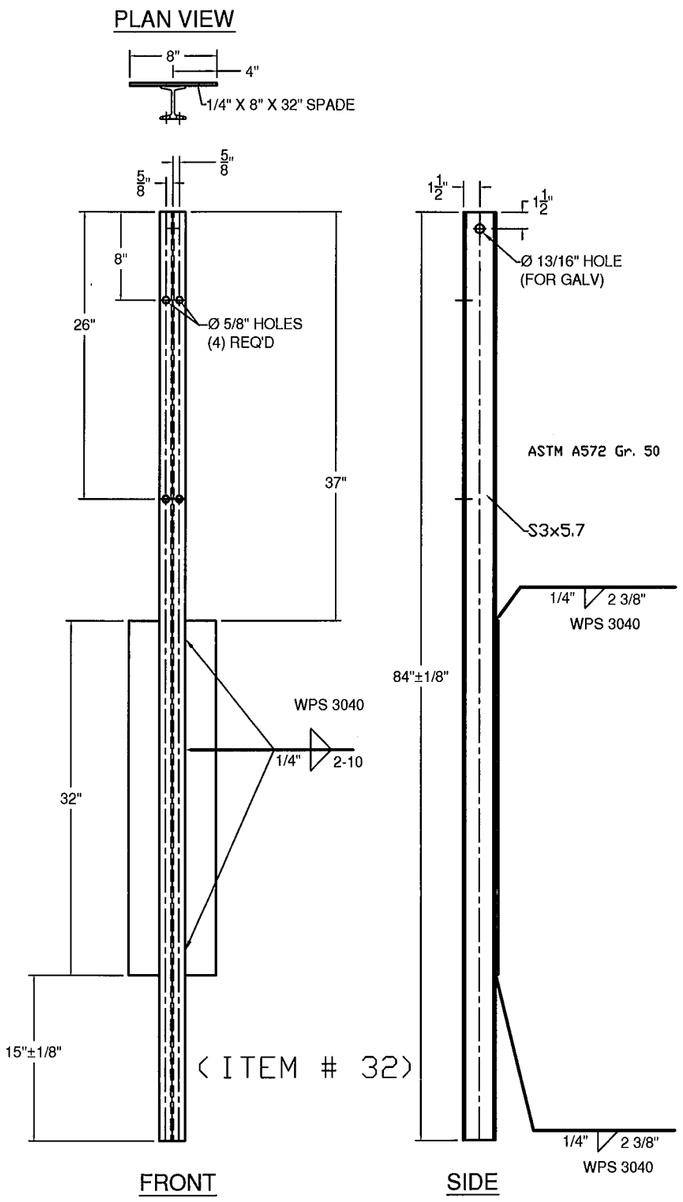

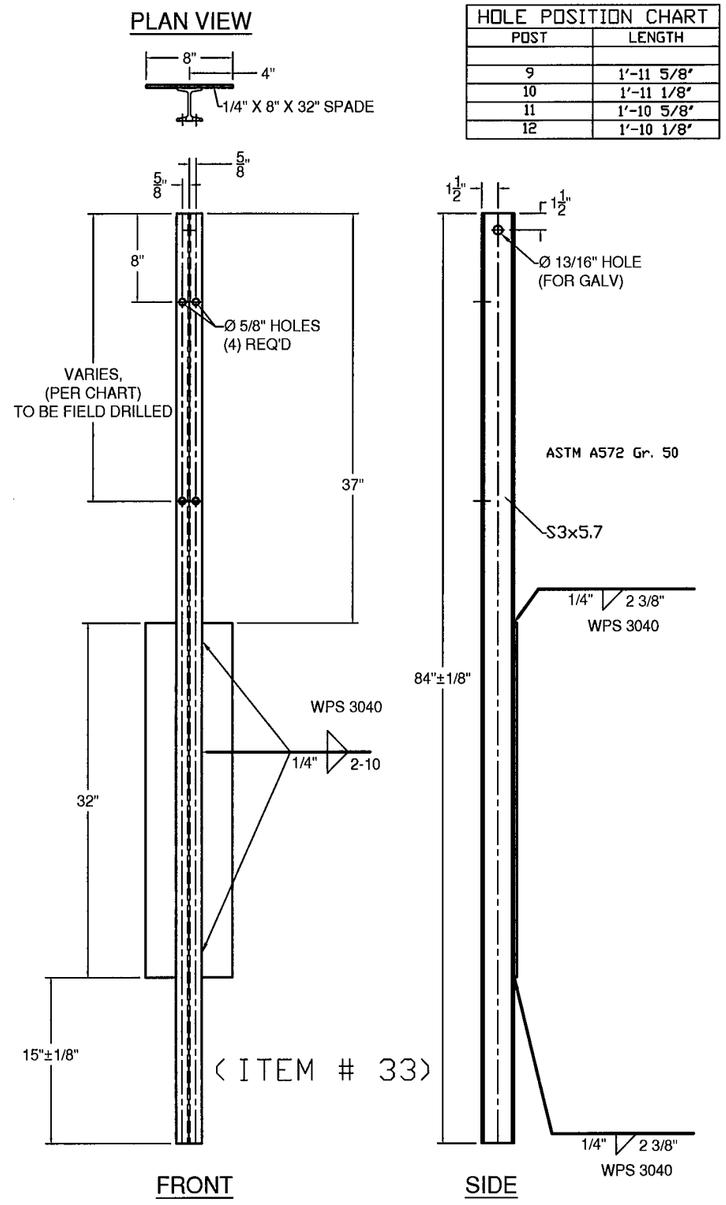

HOLE POSITION CHART	
POST	LENGTH
9	1'-11 5/8"
10	1'-11 1/8"
11	1'-10 5/8"
12	1'-10 1/8"

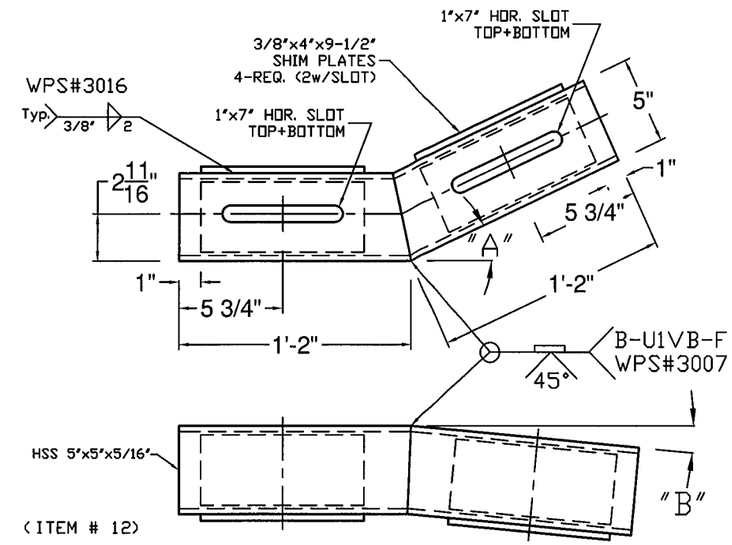

"A" - SEE PLAN FOR TURN BACK DISTANCE, SET ANGLE ACCORDINGLY.
"B" - TURN DOWN ANGLE SET BY THE 9" MEASURMENT AT THE END OF THE BOX BEAM.

ITEM #: 900.620 (TRANSITION) FR Lafayette - JAMAICA, EM13-016

SHEET 7 OF 8

APPROVED BY:

BRIDGE RAIL DETAILS SHEET

EM13-006, JAMAICA ER BRF 015-1 (23)

TOWN OF JAMAICA, WINDHAM COUNTY, VT RTE 30 (MINOR ARTERIAL), BRIDGE NO : 30

REV	NO.	DATE	DESCRIPTION	BY	REV	NO.	DATE	DESCRIPTION	BY

ELDERLEE, INC.
OAKS CORNERS, NEW YORK 14518
E-Mail: dlong@elderlee.com
Tel: 315-789-6670 Fax: 315-789-6615

AISC CERTIFIED FABRICATOR

DRAWN	E.P.	5/30/13
CHECKED	D.L.	5/31/13
APPROVED		
SCALE	SCHEMATIC	
DRAWING NO.	FR LAFAYETTE - JAMAICA	

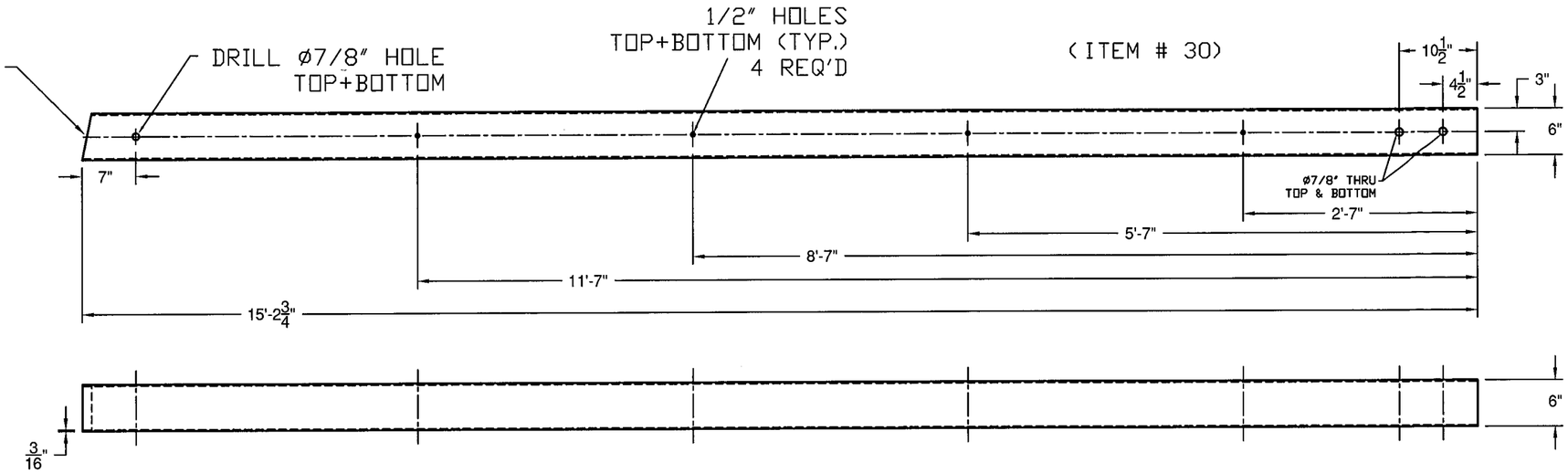

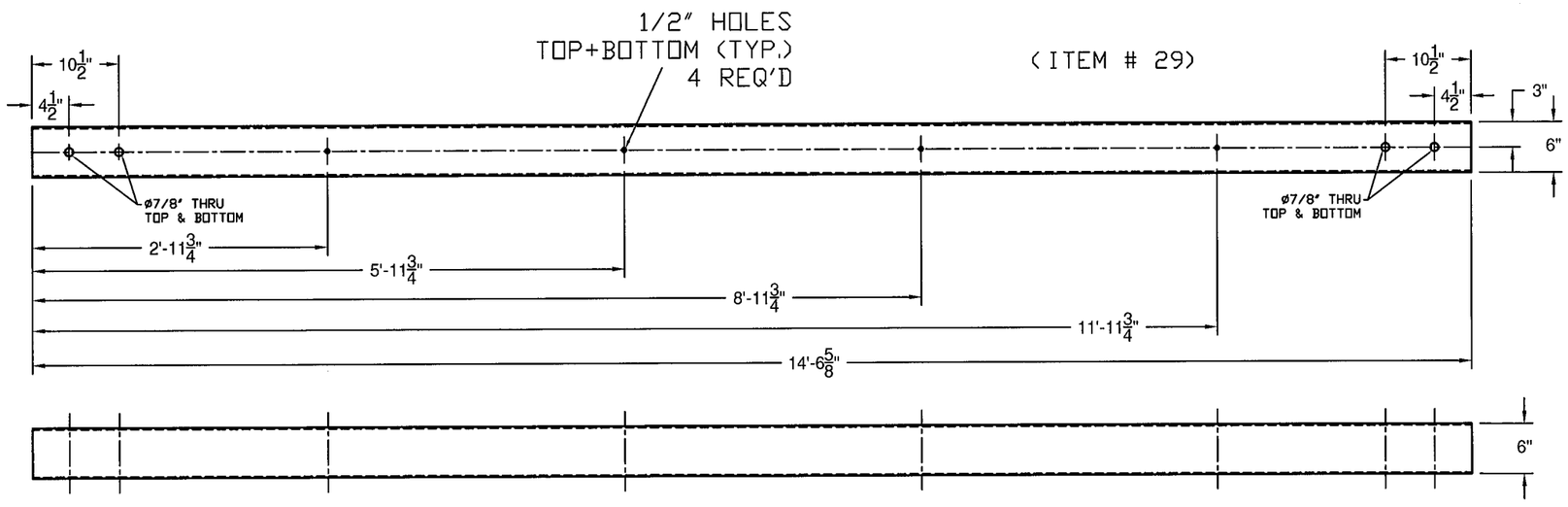

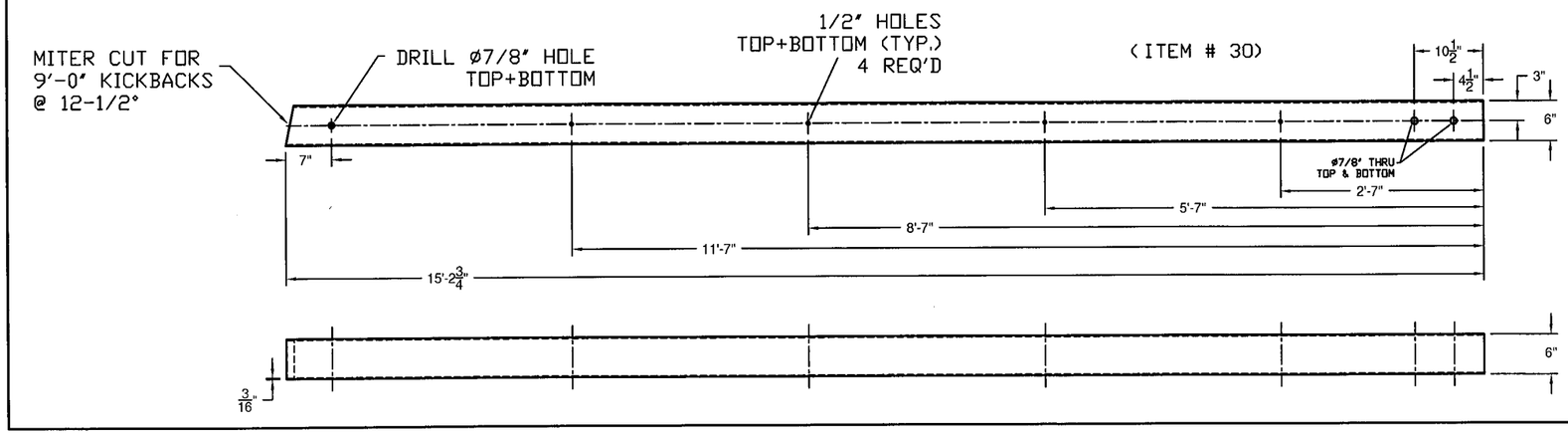

ITEM #: 900.620 (TRANSITION) FR Lafayette - JAMAICA, EM13-016

SHEET 8 OF 8

APPROVED BY:

BRIDGE RAIL DETAILS SHEET

EM13-006, JAMAICA ER BRF 015-1 (23)

TOWN OF JAMAICA, WINDHAM COUNTY, VT RTE 30 (MINOR ARTERIAL), BRIDGE NO : 30

REV	NO.	DATE	DESCRIPTION	BY	REV	NO.	DATE	DESCRIPTION	BY

ELDERLEE, INC.
OAKS CORNERS, NEW YORK 14518
E-Mail: dlong@elderlee.com
Tel: 315-789-6670 Fax: 315-789-6615

AISC CERTIFIED FABRICATOR

DRAWN	E.P.	5/30/13
CHECKED	D.L.	5/31/13
APPROVED	.	
SCALE	SCHEMATIC	
DRAWING NO.	FR LAFAYETTE - JAMAICA	

WELDING PROCEDURE SPECIFICATION

Material Specification	A572 TO A572
Welding Process	FCAW
Manual or Machine	SEMAUTOMATIC
Position of Welding	FLAT
Filler Metal Specification	A5.20 - 95
Filler Metal Classification	E71T-1H8 E71T-9H8 LINCOLN ULTRACORE
Flux	N/A
Shielding Gas	CO 2 Dew Point -40DEG F Flow Rate 50CFH
Single or Multiple Pass	SINGLE
Single or Multiple Arc	SINGLE
Welding Current	DC
Polarity	REVERSE ELECTRODE POSITIVE
Welding Progression	STRINGER
Root Treatment	PER D1.5
Preheat and Interpass Temperature	PER D1.5
Postheat Temperature	NONE
Heat Input	Min _____ Max _____

WELDING PROCEDURE

Pass no.	Electrode size	Welding Current Amperes	Welding Current Volts	Travel speed	Joint detail
1	1/16	300	26	14	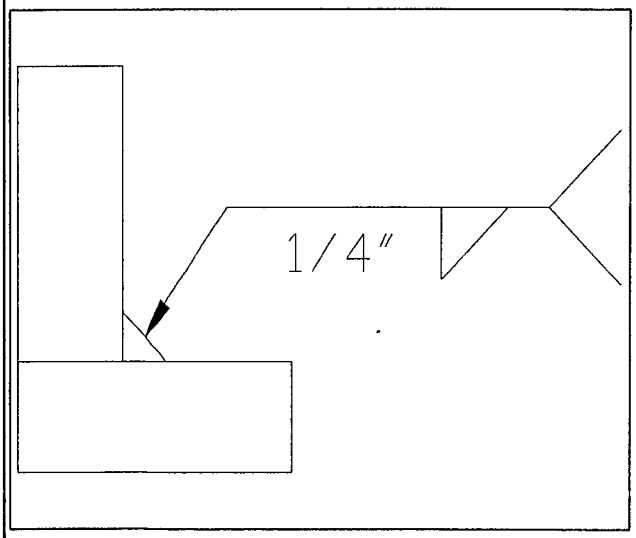
Variable	LIMITS	270 TO 330	24 TO 28	12.6 TO 15.4	

This procedure may vary due to fabrication sequence, fit-up, pass size, etc., within the limitation of variables given in Section 5.

Procedure No. 3001

Revision No. _____

Contractor Elderlee, Inc.

Authorized By RANDY SCOTT

Date 5/29/2013

Form III-2

WELDING PROCEDURE SPECIFICATION

Material Specification	A572 TO A572
Welding Process	FCAW
Manual or Machine	SEMAUTOMATIC
Position of Welding	FLAT
Filler Metal Specification	A5.20 - 95
Filler Metal Classification	E71T-1H8 E71T-9H8 LINCOLN ULTRACORE
Flux	N/A
Shielding Gas	CO 2 Dew Point -40DEG F Flow Rate 50CFH
Single or Multiple Pass	SINGLE
Single or Multiple Arc	SINGLE
Welding Current	DC ELECTRODE POSITIVE
Polarity	REVERSE
Welding Progression	STRINGER
Root Treatment	PER D1.5
Preheat and Interpass Temperature	PER D1.5
Postheat Temperature	NONE
Heat Input	Min _____ Max _____

WELDING PROCEDURE

Pass no.	Electrode size	Welding Current Amperes	Welding Current Volts	Travel speed	Joint detail
1	1/16	300	26	14	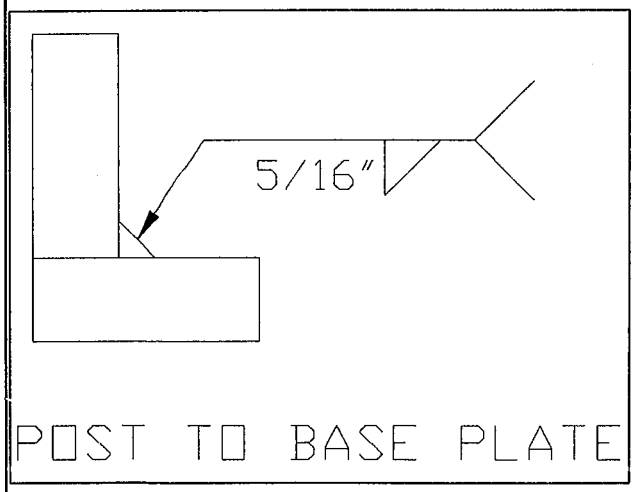
Variable	LIMITS	270 TO 330	24 TO 28	12.6 TO 15.4	

This procedure may vary due to fabrication sequence, fit-up, pass size, etc., within the limitation of variables given in Section 5.

Procedure No. 3002

Revision No. _____

Contractor Elderlee, Inc.

Authorized By RANDY SCOTT

Date 5/29/2013

Form III-2

WELDING PROCEDURE SPECIFICATION

Material Specification	A500 GR B
Welding Process	FCAW
Manual or Machine	SEMAUTOMATIC
Position of Welding	FLAT
Filler Metal Specification	A5.20 - 95
Filler Metal Classification	E71T-1H8 E71T-9H8 LINCOLN ULTRACORE
Flux	N/A
Shielding Gas	CO 2 Dew Point -40DEG F Flow Rate 50CFH
Single or Multiple Pass	SINGLE
Single or Multiple Arc	SINGLE
Welding Current	DC
Polarity	REVERSE ELECTRODE POSITIVE
Welding Progression	STRINGER
Root Treatment	PER D1.5
Preheat and Interpass Temperature	PER D1.5
Postheat Temperature	NONE
Heat Input	Min _____ Max _____

WELDING PROCEDURE

Pass no.	Electrode size	Welding Current Amperes	Welding Current Volts	Travel speed	Joint detail
1	1/16	300	26	14	
Variable	LIMITS	270 TO 330	24 TO 28	12.6 TO 15.4	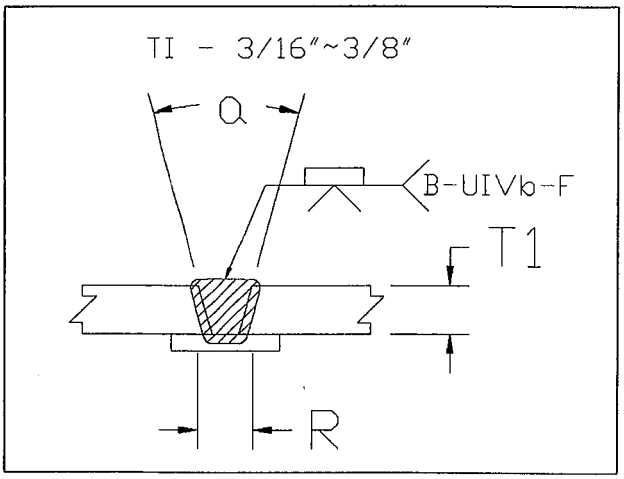

This procedure may vary due to fabrication sequence, fit-up, pass size, etc., within the limitation of variables given in Section 5.

Procedure No. 3007

Revision No. _____

Contractor Elderlee, Inc.

Authorized By RANDY SCOTT

Date 5/29/2013

Form III-2

Form III-2-Sample Welding Procedure Specification

WELDING PROCEDURE SPECIFICATION

Material Specification	A709 TO A500 GR B
Welding Process	FCAW
Manual or Machine	SEMAUTOMATIC
Position of Welding	FLAT
Filler Metal Specification	A5.20 - 95
Filler Metal Classification	E71T-1H8 E71T-9H8 LINCOLN ULTRACORE
Flux	N/A
Shielding Gas	CO 2 Dew Point -40DEG F Flow Rate 50CFH
Single or Multiple Pass	SINGLE
Single or Multiple Arc	SINGLE
Welding Current	DC
Polarity	REVERSE ELECTRODE POSITIVE
Welding Progression	STRINGER
Root Treatment	D1.5
Preheat and Interpass Temperature	D1.5
Postheat Temperature	NONE
Heat Input	Min _____ Max _____

WELDING PROCEDURE

Pass no.	Electrode size	Welding Current Amperes	Welding Current Volts	Travel speed	Joint detail
1	1/16	300	26	14	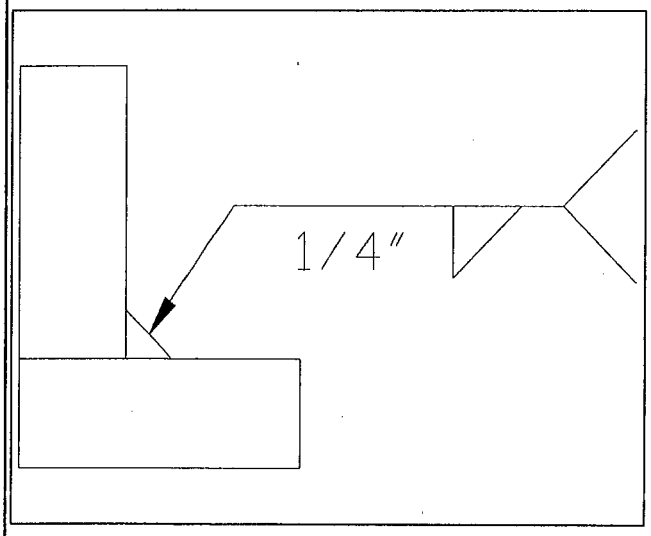
Variable	LIMITS	270 TO 330	24 TO 28	12.6 TO 15.4	

This procedure may vary due to fabrication sequence, fit-up, pass size, etc., within the limitation of variables given in Section 5.

Procedure No. 3009

Revision No. _____

Contractor Elderlee, Inc.

Authorized By RANDY SCOTT

Date 5/22/2013

Form III-2

WELDING PROCEDURE SPECIFICATION

Material Specification	ASTM-A500-A53-GRADE B TO A36
Welding Process	FCAW
Manual or Machine	SEMAUTOMATIC
Position of Welding	5G
Filler Metal Specification	A5.20
Filler Metal Classification	E71T-1/T-1M ESAB DUAL SHIELD 7000
Flux	N/A
Shielding Gas	CO 2 Dew Point -40DEG F FLOW RATE 50 CFH
Single or Multiple Pass	SINGLE
Single or Multiple Arc	SINGLE
Welding Current	DC
Polarity	REVERSE ELECTRODE POSITIVE
Welding Progression	STRINGER
Root Treatment	PER D1.1
Preheat and Interpass Temperature	PER D1.1
Postheat Temperature	NONE
Heat Input	Min _____ Max _____

WELDING PROCEDURE

Pass no.	Electrode size	Welding Current Amperes	Welding Current Volts	Travel speed	Joint detail
1	.035	110	21	6IPM	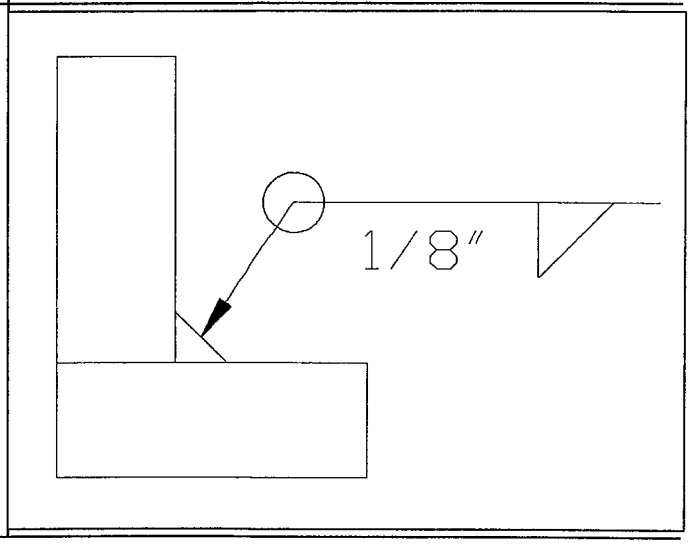
Variable	LIMITS	121 TO 99	23 TO 19	7 TO 5	

This procedure may vary due to fabrication sequence, fit-up, pass size, etc., within the limitation of variables given in Section 5.

Procedure No. 3012

Revision No. _____

Contractor Elderlee, Inc.

Authorized By RANDY SCOTT

Date 6/21/2012

Form III-2

WELDING PROCEDURE SPECIFICATION

Material Specification	ASTM-A36 A709 GR 36 CVN
Welding Process	FCAW
Manual or Machine	SEMAUTOMATIC
Position of Welding	FLAT
Filler Metal Specification	A5.20- 95
Filler Metal Classification	E71T-1H8 E71T-9H8 LINCOLN ULTRACORE
Flux	N/A
Shielding Gas	CO 2 Dew Point -40DEG F Flow Rate 50CFH
Single or Multiple Pass	SINGLE
Single or Multiple Arc	SINGLE
Welding Current	DC
Polarity	REVERSE
Welding Progression	STRINGER
Root Treatment	PER D1.5
Preheat and Interpass Temperature	PER D1.5
Postheat Temperature	NONE
Heat Input	Min _____ Max _____

WELDING PROCEDURE

Pass no.	Electrode size	Welding Current Amperes	Welding Current Volts	Travel speed	Joint detail
1	1/16	300	26	14	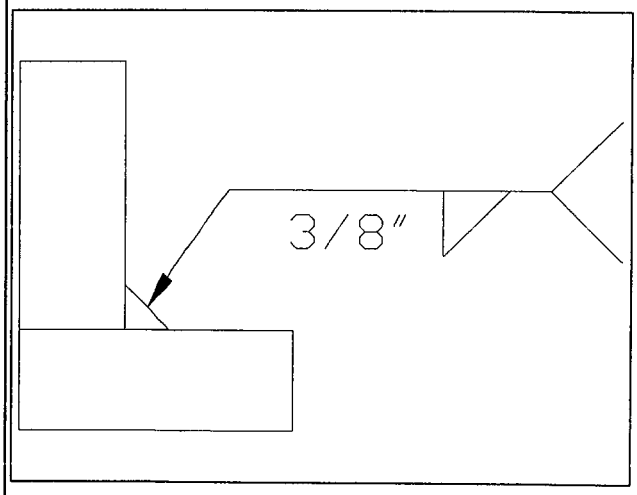
Variable	LIMITS	270 TO 330	24 TO 28	12.6 TO 15.4	

This procedure may vary due to fabrication sequence, fit-up, pass size, etc., within the limitation of variables given in Section 5.

Procedure No. 3016

Revision No. _____

Contractor Elderlee, Inc.

Authorized By RANDY SCOTT

Date 1/3/2013

Form III-2

WELDING PROCEDURE SPECIFICATION

Material Specification	ASTM A572 GR. 50 CVN A500 GR B
Welding Process	FCAW
Manual or Machine	SEMAUTOMATIC
Position of Welding	FLAT
Filler Metal Specification	A5.20 - 95
Filler Metal Classification	E71T-1H8 E71T-9H8 LINCOLN ULTRACORE
Flux	N/A
Shielding Gas	CO 2 Dew Point -40DEG F Flow Rate 50CFH
Single or Multiple Pass	SINGLE
Single or Multiple Arc	SINGLE
Welding Current	DC
Polarity	REVERSE ELECTRODE POSITIVE
Welding Progression	STRINGER
Root Treatment	PER D1.5
Preheat and Interpass Temperature	PER D1.5
Postheat Temperature	NONE
Heat Input	Min _____ Max _____

WELDING PROCEDURE

Pass no.	Electrode size	Welding Current Amperes	Welding Current Volts	Travel speed	Joint detail
1	1/16	300	26	14	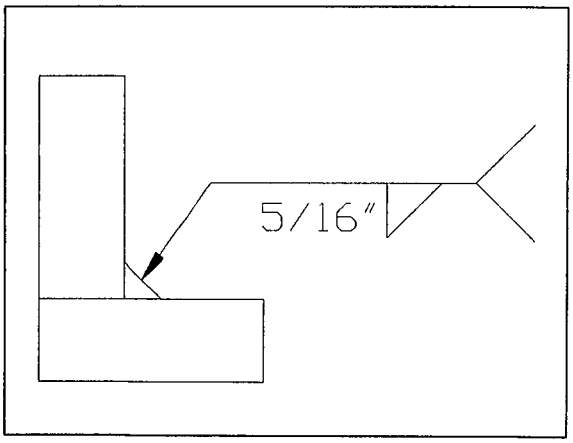
Variable	LIMITS	270 TO 330	24 TO 28	12.6 TO 15.4	

This procedure may vary due to fabrication sequence, fit-up, pass size, etc., within the limitation of variables given in Section 5.

Procedure No. 3037

Revision No. _____

Contractor Elderlee, Inc.

Authorized By RANDY SCOTT

Date 12/20/2011

Form III-2

WELDING PROCEDURE SPECIFICATION

Material Specification	A36
Welding Process	GMAW
Manual or Machine	SEMAUTOMATIC
Position of Welding	FLAT
Filler Metal Specification	A5.18
Filler Metal Classification	L-50 .052 LINCOLN
Flux	N/A
Shielding Gas	90% ARGON /10% CO2 Dew Point -40DEG F Flow Rate 50 CFM
Single or Multiple Pass	SINGLE
Single or Multiple Arc	SINGLE
Welding Current	DC
Polarity	REVERSE
Welding Progression	STRINGER
Root Treatment	PER D1.5
Preheat and Interpass Temperature	PER D1.5
Postheat Temperature	NONE
Heat Input	Min _____ Max _____

WELDING PROCEDURE

Pass no.	Electrode size	Welding Current Amperes	Welding Current Volts	Travel speed	Joint detail
	.052	430	32	13	
Variable	LIMITS	387 TO 473	29 TO 34	12 TO 14	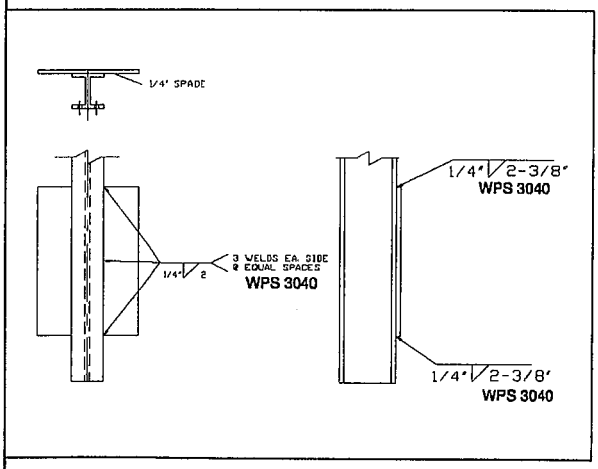

This procedure may vary due to fabrication sequence, fit-up, pass size, etc., within the limitation of variables given in Section 5.

Procedure No. 3040

Revision No. _____

Contractor Elderlee, Inc.

Authorized By RANDY SCOTT

Date 12/20/2011

Form III-2