WPS Number	Joint Configuation	process	Notes
S-1011	square groove butt joint,1G	SAW	WTTI P1-2674G
S-1001-A	5/16" fillet, 1F and 2F	SAW	WTTI P1-2674G
S-1005	single groove weld 1G	SAW	WTTI P1-2674G
S-1005-A	double groove weld, 1G	SAW	WTTI P1-2674G
S-1009	5/16" fillet, 1F and 2F	SAW	SAW,PQR ORTHO 1G DCEN Rev o.
FC-1001-A	5/16" fillet, 1F and 2F	FCAW	FCAW-PQR-50W-50W-1G-WM23
FC-1002-A	5/16" fillet, 3F	FCAW	FCAW-PQR-50W-50W-3G-WM23
FC-1003-A	5/16" fillet 4F	FCAW	FCAW-PQR-50W-50W-4G-WM23
SM-100	tacking and repairs- 1F,1G and 2F	SMAW	Pre approved process
SM-200	tacking and repairs- 2G	SMAW	Pre approved process
SM-300	tacking and repairs-3F and 3G	SMAW	Pre approved process
SM-400	tacking and repairs- 4F and 4G	SMAW	Pre approved process

STRUCTAL BRIDGES, a division of Canam Steel Corp.

WELDING PROCEDURE SPECIFICATION

FCM AND NON FCM WELDS

WPS Number: S-1011	Issue date:03-07-2013
Project: Jamaica VT.,ER-BRF-015-1 (23)	STRUCTAL job #.: UPO 1195
Base metal: ASTM A709 GR 36,50,50W, HPS 50W.	
Welding process: Submerged Arc Welding	
Filler metal spec. and Trade Name:AWS,A5.23 Lincolnweld, LA-75	
Flux / shielding gas: Lincolnweld 960	
Current and polarity: DCEP	Electrical stickout:1" +/- 1/4"
Welding position: 1G	
Preheat temp...:AWS D1.5 Table 4.3 / 12.3	WPS qualification:AWS D1.5 / section 5
Heat input: 47.25 - 74.15 Kilojoules	Supporting PQR#:WTTI P1-2674G

electrode size	welding amps	current volts	travel speed
3/32"	405-466	28 - 30.5	11.5 - 13.5

Joint Detail : B-L1a-S

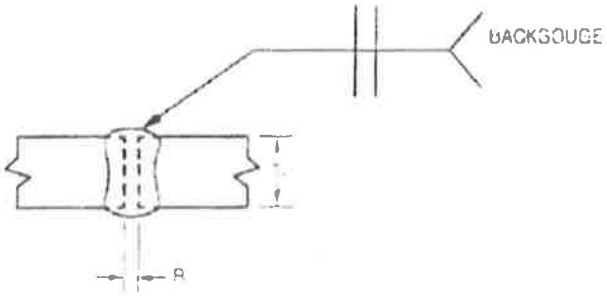

Notes: For welding 1/2" Webs.

Square-Groove Butt Joint.

Grind Flat After Welding

T_1 =1/2"

R = +1/16"- 0"

Minimum preheat and interpass temperatures per AWS D1.5 Table 4.3 / 12.3

Maximum interpass temp. shall be 450˚F

Thickness of thickest part at point of welding	FCM	Non FCM
up to 3/4"	125˚F	50˚F
3/4" to 1 1/2"	200˚F	70˚F
1 1/2" to 2 1/2"	300˚F	150˚F
over 2 1/2"	350˚F	225˚F

This procedure may vary due to fabrication sequence, fit up, pass size, etc. within the limits provided in the contract documents and the AWS D1.5, 2010 Bridge Welding Code.

STRUCTAL BRIDGES, a division of Canam Steel Corp.

WELDING PROCEDURE SPECIFICATION

FCM AND NON FCM WELDS

WPS Number: S-1001-A	Issue date: 03-07-2013
Project: Jamaica VT, ER-BRF-015-1 (23)	STRUCTAL job #.:UPO 1195
Base metal: ASTM A709 GR 36,50,50W, HPS 50W.	
Welding process: Submerged Arc Welding	
Filler metal spec. AWS,A5.23 Lincolnweld LA-75	
Flux / shielding gas:Lincolnweld 960	
Current and polarity: DCEP	Electrical stickout: 3/4" +/- 1/4"
Welding position: 1F and 2F	
Preheat temp..:AWS D1.5 Table 4.3 / 12.3	WPS qualification:AWS D1.5 / section 5
Heat input: 47.25 - 74.15 Kilojoules	Supporting PQR#: WTTI P1-2674G

electrode size	welding amps	current volts	travel speed
3/32"	405 - 466	27.9 - 30.5	11.5 - 13.8

Joint Detail : T joint

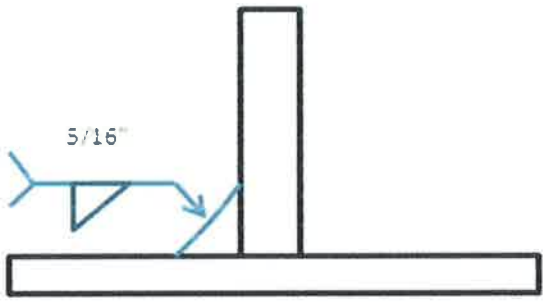

Notes: For welding 5/16" fillet welds.

Minimum preheat and interpass temperatures per AWS D1.5 Table 4.3 / 12.3

Maximum interpass temp. shall be 450°F

Thickness of thickest part at point of welding	FCM	Non FCM
up to 3/4"	125°F	50°F
3/4" to 1 1/2"	200°F	70°F
1 1/2" to 2 1/2"	300°F	150°F
over 2 1/2"	350°F	225°F

This procedure may vary due to fabrication sequence, fit up, pass size, etc. within the limits provided in the contract documents and the AWS D1.5, 2010 Bridge Welding Code.

STRUCTAL BRIDGES, a division of Canam Steel Corp.

WELDING PROCEDURE SPECIFICATION

FCM AND NON FCM WELDS

WPS Number: S-1005	Issue date:03- 07-2013
Project: Jamaica VT, ER-BRF-015-1 (23)	STRUCTAL job #.:UPO 1195
Base metal: ASTM A709 GR 36,50,50W, HPS 50W.	
Welding process: Submerged Arc Welding	
Filler metal spec. AWS,A5.23 Lincolnweld LA-75	
Flux / shielding gas:Lincolnweld 960	
Current and polarity: DCEP	Electrical stickout: 3/4" +/- 1/4"
Welding position: 1G	
Preheat temp..:AWS D1.5 Table 4.3 / 12.3	WPS qualification:AWS D1.5 / section 5
Heat input: 47.25 - 74.15 Kilojoules	Supporting PQR#: WTTI P1-2674G

electrode size	welding amps	current volts	travel speed
3/32"	405 - 466	27.9 - 30.5	11.5 - 13.8

Joint Detail :B-L2c-S

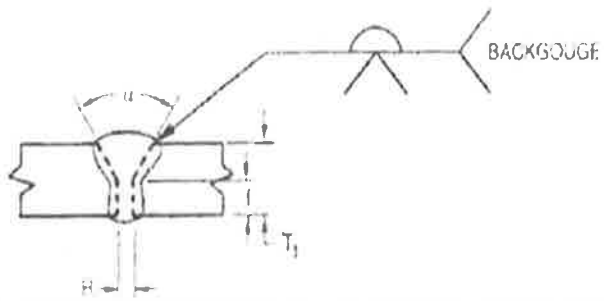

Notes: For welding Single Groove welds on Flanges.

1" to 1"	T1 = 1"	f = 1/4" minimum, + 1/4" - 0"	R = 0"	a = 60°
1 1/4" to 1 1/4"	T1 = 1 1/4"	f = 3/8" minimum, + 1/4" - 0"	R = 0"	a = 60°
2" to 2"	T1 = 2"	f = 1/2" minimum, + 1/4" - 0"	R = 0"	a = 60°

Grind flat after welding

Minimum preheat and interpass temperatures per AWS D1.5 Table 4.3 / 12.3

Maximum interpass temp. shall be 450°F

Thickness of thickest part at point of welding	FCM	Non FCM
up to 3/4"	125°F	50°F
3/4" to 1 1/2"	200°F	70°F
1 1/2" to 2 1/2"	300°F	150°F
over 2 1/2"	350°F	225°F

This procedure may vary due to fabrication sequence, fit up, pass size, etc. within the limits provided in the contract documents and the AWS D1.5, 2010 Bridge Welding Code.

STRUCTAL BRIDGES, a division of Canam Steel Corp.

WELDING PROCEDURE SPECIFICATION

FCM AND NON FCM WELDS

WPS Number: S-1005-A	Issue date:03-07-2013
Project: Jamaica VT, ER-BRF-015-1(23)	STRUCTAL job #.:UPO 1195
Base metal: ASTM A709 GR 36,50,50W, HPS 50W.	
Welding process: Submerged Arc Welding	
Filler metal spec. AWS,A5.23 Lincolnweld LA-75	
Flux / shielding gas:Lincolnweld 960	
Current and polarity: DCEP	Electrical stickout: 3/4" +/- 1/4"
Welding position: 1G	
Preheat temp..:AWS D1.5 Table 4.3 / 12.3	WPS qualification:AWS D1.5 / section 5
Heat input: 47.25 - 74.15 Kilojoules	Supporting PQR#: WTTI P1-2674G

electrode size	welding amps	current volts	travel speed
3/32"	405 - 466	27.9 - 30.5	11.5 - 13.8

Joint Detail :B-U3c-S

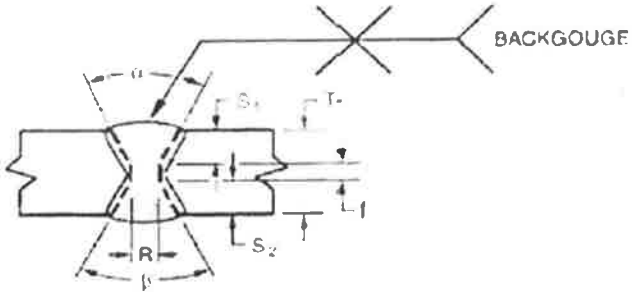

Notes: For welding Double Groove welds on Flanges,

2 1/4" to 2 1/4"	T_1 = 2 1/4"	S_1 = 1"
	R = 0"	S_2 = 1"
	a = 60°	f = 1/4"
Grind flat after welding	b = 60°	

Minimum preheat and interpass temperatures per AWS D1.5 Table 4.3 / 12.3

Maximum interpass temp. shall be 450°F

Thickness of thickest part at point of welding	FCM	Non FCM
up to 3/4"	125°F	50°F
3/4" to 1 1/2"	200°F	70°F
1 1/2" to 2 1/2"	300°F	150°F
over 2 1/2"	350°F	225°F

This procedure may vary due to fabrication sequence, fit up, pass size, etc. within the limits provided in the contract documents and the AWS D1.5, 2010 Bridge Welding Code.

PROCEDURE QUALIFICATION RECORD

PQR NUMBER:WTTI P1-2674G

Welder's Name Joseph T. Shillingburg ID Employee# 3835 Welding Test Date 07-30-2009

Process SAW Position 1G ESO 1/2 to3/4" Joint Detail : B-U2-S

Electrode(s) Mfg. Designation Lincolnweld LA-75 Elect.Class. ENi1K-Ni1 AWS FluxDesig. F8A2

Post Weld Heat Treatment :Temp N/A Hold Time N/A Heating/Cooling Rate N/A

	Diameter	Current	WFS*	Voltage	Current & Polarity
Electrode (1)	3/32"	450	-----	30	DCEP
Electrode (2)					
Electrode (3)					

Calculated Heat Input (see 5.12) 66.4 kJ/in. per 5.13

Shielding Gas N/A Dew Point N/A Flow Rate N/A Gas Cup Size N/A

Travel Speed: Min. 12 in/min. average Max. -

Base Metal Specification and Thickness A709 Gr.50W, 1" Heat Number 8100186

Backing Metal Specification and Thickness A709 Gr.50W, 3/8" Heat Number 8100187

Base metal Carbon Equivalent (see 5.4.2) 0.56

(See attached the Certified Mill Test Report for Base and Backing Materials)

Preheat Temp. 210F Interpass Temp. : Min. 210F Max. 450F

SPECIMEN **TEST RESULTS**

AWMT : Tensile Strength 78.5 ksi Yield Strength 61.5 ksi Elong.% In 50mm 29 ROA (%) 67

Visual Inspection: x Acceptable Unacceptable **Macro Test: x Acceptable Unacceptable

Side Bends 1. Satisfactory 2. Satisfactory 3. Satisfactory 4. Satisfactory

Reduced Section Tension : Tension Strength 1. 85 ksi Location of Break 1. Weld

2. 85 ksi Location of Break 2. Weld

Charpy V-Notch Impact (54 , 48 , 36 , 48 , 54)

Toughness of Weld Metal (54 , 48 , 48)

SMAW, SAW, FCAW, GMAW – 5 Req'd. [a]Avg. 50 ft.lbs@ -20° F

ESW and EGW – 8 Req'd.

**Chemistry of Deposited Weld Metal C N/A Mn Si P S

When Required by contract Documents* Ni Cr Mo V Cu

Radiographic Test: x Acceptable Unacceptable Remarks:

Fillet Weld Soundness Maximum Size Single Pass : 5/16" 1. Acceptable 2. Acceptable 3. Acceptable

Macroetch Minimum Size Multiple pass: 3/8" 1. Acceptable 2. Acceptable 3. Acceptable

We, the undersigned, certify that the above described WPQR/FWS has been qualified in accordance with Clause 5 of the AASHTO / AWS D1.5M/D1.5, (2008) Bridge Welding Code.

Year

State/3rd party Witness William Campbell Mfr./Contractor Manufacturer: Structal, div. Canam

Date Authorized By A.Daigneault

Date Feb. 22, 2011

WILLIAM A. CAMPBELL CWI 94070411 QC1 EXP. 07/01/12

Agency Results Reviewed Keville Entr.

Date 2/22/11 William Campbell

Alain Daigneault INGÉNIEUR - ENGINEER 104099 QUÉBEC

CWB Level 2 #5120

*Optional; **Optional for CJP; [a]Discard the highest and lowest values and average the 3 remaining.

Structal Form Rev.0 / 2011-02-12

WTTI
WELDER TRAINING AND TESTING INSTITUTE
WWW.WTTI.COM
1144 N. GRAHAM ST. · ALLENTOWN, PA 18109 · TEL 610-820-9551 · FAX 610-820-0271

Welding Procedure Specification (WPS)
AWS D1.5
AASHTO / AWS D1.5 Qualification Type

Company Name: CanAm Steel Corporation ***Date:*** 7/30/2009
PQR No.: P1-2674 ***WPS No.:*** P1-2674 ***Revision No.:*** 0

Joint
Type of Joint: V & U Grooves
Backing: With or Bothsides
Root Opening: 5/8" - 11/16"
Groove Angle: 20 - 30°
Backgouging: When Required
Root Treatment: None used
Single or Double Weld: Single Welded
Backing Material: Same as Base Material
Root Face Dimension: None
Radius (J-U): n/a
Backgouging Method: Air Arc, Grinder

Process
Welding Process(es): SAW ***Type:*** Machine

Base Metals
Material Spec.: A-709 Gr. 36, 50, 50 W
to: A-709 Gr. 36, 50, 50 W
Thickness: 1/8"- Unlimited
Other: Not Specified

Filler Metals
Filler Metal Specification: A5.23
Filler Metal Classification: ENi1K
Manufacturer Trade Name: Lincolnweld LA-75

Shielding
Flux: Lincolnweld 960 ***Mfg. Trade Name:*** Lincoln
Electrode-Flux (Class): F8A2-ENi1K-Ni1-H8
Gas: n/a
Flow: n/a ***Gas Cup Size:*** 5/8"

Preheat
Preheat Temp. (Min.): 210°F *(If below 32°F preheat to a min. of 70°F)*
Interpass Temp. (Min.): 210°F ***(Max.):*** 450°F

Postweld Heat Treatment
Temperature: Without PWHT ***Hold Time:*** n/a
Heating / Cooling Rate: n/a

Heat Input
Minimum: 39,825 Joules
Maximum: 66,375 Joules

Position
Position: 1G
Weld Progression: n/a

Electrical Characteristics
Transfer Mode (GMAW): n/a
Current: DC ***Polarity:*** EP
Electrical Stick Out: 1/2" - 3/4"

Technique
Stringer or Weave Bead: Both
Single or Multiple Pass (per side): Multiple pass
Single or Multiple Electrode: Single Arc Only
Electrode Spacing: ***Longitudinal:*** n/a
Lateral: n/a ***Angle:*** n/a
Interpass Cleaning: Wire brush, chipping hammer
Other: Min. Preheat & Interpass FCM: Less Than 3/4"=100F. 3/4" to 1 1/2"=200F. 1 1/2" to 2 1/2"=300F. Greater than 2 1/2"=350F. Non FCM: Less Than 3/4"=50F. 3/4" to 1 1/2"=70F. 1 1/2" to 2 1/2"=150F. Greater than 2 1/2"=225F.

Passes	Diameter	Amps	Volts	Travel Speed	Joint Design
All	3/32"	360 - 390	25.4 - 26.8	9.5 - 13.7 ipm	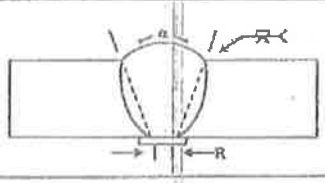
All	3/32"	390 - 420	26.8 - 28.2	10.8 - 15.7 ipm	
All	3/32"	420 - 450	28.2 - 29.5	12 - 17.8 ipm	

This WPS may vary due to fabrication sequence, fit up, pass size, etc., within the limitations of variables given in section 5.
Year of Code: 2008
Company Name: CanAm Steel Corporation
Authorized By: [signature]
Date: 8/11/2009

WTTI
WELDER TRAINING AND TESTING INSTITUTE
WWW.WTTI.COM
1144 N. GRAHAM ST. · ALLENTOWN, PA 18109 · TEL 610-820-9551 · FAX 610-820-0271

Procedure Qualification Record (PQR)
A.W.S. D1.5

Welder's Name: Joseph T. Shillingburg
Company Name: CanAm Steel Corporation
Welding Process(es): SAW (Machine)
Position: 1G
Electrode(s) Mfg. Designation: Lincolnweld LA-75
Mfg. Flux Designation: Lincolnweld 960
Electrode Extension: 1/2" - 3/4"

Test Date: 7/30/2009
Joint Detail: Fig. 5.1
Electrical Stick Out: 1/2" - 3/4"
Procedure #: P1-2674
Filler Metal Spec.: A5.23
AWS Class: ENi1K
AWS Class: F8A2-ENi1K-Ni1-H8

Postweld Heat Treatment: **Temp.:** n/a **Hold Time:** n/a **Heating / Cooling Rate:** n/a

Passes	Diameter	Type & Polarity	Amps	Volts	Travel Speed
All	3/32"	DCEP	450	29.5	12 ipm

Calculated Heat Input: 66,375 Joules
Shielding Gas: None
Flow Rate: n/a
Dew Point: n/a
Gas Cup Size: n/a
Material Spec.: A-709 Gr. 50W to A-709 Gr. 50W
Thickness: 1.00" (25.4mm)
Heat Number: 8100186
Carbon Equivalent: 0.51
Preheat Temp. (Min.): 210°F
Interpass Temp. (Min.): 210°F **(Max.):** 450°F

All Weld Metal Tensile
Tensile Strength: 78,500 psi (MPa) **Elongation:** 29.0%
Yield Point / Strength: 61,500 psi (MPa) **Reduction in Area:** 67.0%

Side Bends **#1:** PASSED **#2:** PASSED **#3:** PASSED **#4:** PASSED

Reduced Section Tension
Tension Strength: #1: 85,439 **Location of Break: #1:** Weld Metal - Ductile
#2: 85,444 **#2:** Weld Metal - Ductile

CVN Test Toughness of Weld Metal
Temperature: -20°F **#1:** 54 **#2:** 48 **#3:** 36 **#4:** 48
SMAW, SAW, FCAW, GMAW-S Reg. BSW and EGW-8 Reg. **#5:** 54 **#6:** **#7:** **#8:**

Chemistry of Deposited Weld Metal
When Required by Contract Documents
C: **Mn:** **Si:** **P:** **S:**
Ni: **Cr:** **Mo:** **V:** **Cu:**

Remarks **Visual:** Acceptable **Macro Test:** Acceptable **Radiographic Test:** PASSED

Fillet Weld Soundness Macroetch
Max. Size Single Pass: **#1:** **#2:** **#3:**
Min. Size Multi Pass: n/a **#1:** **#2:** **#3:**

We, the undersigned, certify that the above described WPQR/FWS has been qualified in accordance with Clause 5 of the AASHTO/AWS D1.5M/D1.5, (2008) Bridge Welding Code.

Test Witness: Patrick F. Dorris CWI / WTTI
Lab Number: 200907109
Date:
Company Name: CanAm Steel Corporation
Agency:
Date:
Authorized By: John Bracey **Date:** 8/[illegible]/2009

WTTI
WWW.WTTI.COM
WELDER TRAINING AND TESTING INSTITUTE
1144 N. GRAHAM ST. · ALLENTOWN, PA 18109 · TEL 610-820-9551 · FAX 610-820-0271

LABORATORY TEST REPORT

LABORATORY TEST NUMBER: 200907109
COMPANY NAME: CanAm Steel Corporation
WELDER'S NAME: Joseph T. Shillingburg
PROCEDURE NUMBER: P1-2674
PROCESS: SAW
POSITION: 1G
MATERIAL SPECIFICATION: A-709 Gr. 50W to A-709 Gr. 50W
THICKNESS: 1.00" (25mm)
DIAMETER: n/a

TENSILE TEST RESULTS

MINIMUM TENSILE REQUIRED 70,000

	#1	#2
WIDTH:	1.0005 in.	1.0010 in.
THICKNESS:	0.9195 in.	0.9675 in.
AREA:	0.9200 sq. in.	0.9685 sq. in.
ULTIMATE TENSILE LOAD:	78,600 lbs.	82,750 lbs.
ULTIMATE TENSILE STRENGTH:	85,439 psi	85,444 psi
LOCATION OF FAILURE:	WM-Ductile	WM-Ductile

GUIDED BENDS OR FILLET WELD TEST RESULTS

SPECIMEN TYPE & FIGURE NO.	***RESULTS***
#1: Side Bend per Figure 5.11	PASSED
#2: Side Bend per Figure 5.11	PASSED
#3: Side Bend per Figure 5.11	PASSED
#4: Side Bend per Figure 5.11	PASSED

OTHER: 3 Macroetch per Para. 5.18.2-PASSED, Visual per Para. 6.26.1-PASSED, Radiograph per Para. 6.10-PASSED

WELDING OF TEST SAMPLE WITNESSED BY: Patrick F. Dorris CWI / WTTI
LABORATORY TEST CONDUCTED BY: Jeffrey T. Wiswesser CWI / WTTI
LAB TEST CONDUCTED IN ACCORDANCE WITH: AWS D1.5-2008
DATE: 7/30/2009
COMMENTS: See 2nd page of lab report for additional testing.
FINAL STATUS: PASSED

SIGNATURE:

AWS QC 1
JEFFREY T. WISWESSER
98070451
CWI

WTTI
WELDER TRAINING AND TESTING INSTITUTE
WW.WTTI.COM
1144 N. GRAHAM ST. · ALLENTOWN, PA 18109 · TEL 610-820-9551 · FAX 610-820-0271

LABORATORY TEST NUMBER: 200907109
COMPANY NAME: CanAm Steel Corporation
MATERIAL SPECIFICATION: A-709 Gr. 50W to A-709 Gr. 50W
IDENTIFICATION OF SAMPLE: Joseph T. Shillingburg(P1-2674)
THICKNESS: 1.00" (25mm)

CHARPY V-NOTCH IMPACT TEST RESULTS

LOCATION	FT-LBS. 25 MIN.	LAT. EXP. Avg. Inches	% SHEAR
Center Weld	54	.048"	40
Center Weld	48	.043"	30
Center Weld	36	.037"	20
Center Weld	48	.044"	30
Center Weld	54	.049"	40

ALL WELD METAL TENSILE TEST RESULTS

Sample ID	Tensile Strength	Yield Strength	Elongation (in 2")	Reduction of Area
Joseph T. Shillingburg	78,500 psi	61,500 psi	29.0%	67.0%

DESTRUCTIVE TESTS CONDUCTED BY: J. Wiswesser CWI / WTTI
TESTS CONDUCTED IN ACCORDANCE WITH: V-Notch Charpy Impact tests were performed at -20 Degrees F. All testing in conformance with AWS D1.5 - 2008. All Weld Metal Tensile test was performed in conformance with AWS D1.5 - 2008.
SIGNED BY: Jeffrey T. Wiswesser CWI/WTTI
DATE: 07/30/2009

AWS QC 1
JEFFREY T. WISWESSER
99070451
CWI

WTTI
WELDER TRAINING AND TESTING INSTITUTE
WWW.WTTI.COM
1144 N. GRAHAM ST. · ALLENTOWN, PA 18109 · TEL 610-820-9551 · FAX 610-820-0271

Welding Procedure Specification (WPS)
AWS D1.5
AASHTO / AWS D1.5 Qualification Type

Company Name: CanAm Steel Corporation
Date: 7/30/2009
PQR No.: P1-2674F
WPS No.: P1-2674F
Revision No.: 0

Joint
Type of Joint: Fillet Welds (5/16" Max. Single Pass / 3/8" Min. Multiple Pass).
Single or Double Weld: Single Welded
Backing: n/a
Backing Material: n/a
Root Opening: n/a
Root Face Dimension: n/a
Groove Angle: n/a
Radius (J-U): n/a
Backgouging: n/a
Backgouging Method: n/a
Root Treatment: n/a

Process
Welding Process(es): SAW
Type: Machine

Base Metals
Material Spec.: A-709 Gr. 36, 50, 50W
to: A-709 Gr. 36, 50, 50W
Thickness: 1/8"- Unlimited
Other: Not Specified

Filler Metals
Filler Metal Specification: A5.23
Filler Metal Classification: ENi1K
Manufacturer Trade Name: Lincolnweld LA-75

Shielding
Flux: Lincolnweld 960
Mfg. Trade Name: Lincoln
Electrode-Flux (Class): F8A2-ENi1K-Ni1-H8
Gas: n/a
Flow: n/a
Gas Cup Size: 5/8"

Preheat
Preheat Temp. (Min.): 210°F
(If below 32°F preheat to a min. of 70°F)
Interpass Temp. (Min.): 210°F
(Max.): 450°F

Postweld Heat Treatment
Temperature: Without PWHT
Hold Time: n/a
Heating / Cooling Rate: n/a

Heat Input
Minimum: n/a
Maximum: n/a

Position
Position: 2F
Weld Progression: n/a

Electrical Characteristics
Transfer Mode (GMAW): n/a
Current: DC
Polarity: EP
Electrical Stick Out: 1/2" to 3/4"

Technique
Stringer or Weave Bead: Stringer
Single or Multiple Pass (per side): Single & Multiple
Single or Multiple Electrode: Single Electrode
Electrode Spacing: ***Longitudinal:*** n/a
Lateral: n/a
Angle: n/a
Interpass Cleaning: Wire brush, chipping hammer
Other: Min. Preheat & Interpass FCM: Less Than 3/4"=100F. 3/4" to 1 1/2"=200F. 1 1/2" to 2 1/2"=300F. Greater than 2 1/2"=350F. Non FCM: Less Than 3/4"=50F. 3/4" to 1 1/2"=70F. 1 1/2" to 2 1/2"=150F. Greater than 2 1/2"=225F.

Passes	*Diameter*	*Amps*	*Volts*	*Travel Speed*	*Joint Design*
5/16" Single	3/32"	450	29.5	12 ipm	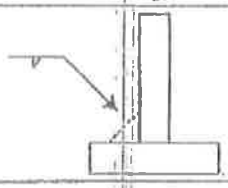
3/8" Multiple	3/32"	360 - 390 390 - 420 420 - 450	25.4 - 26.8 26.8 - 28.2 28.2 - 29.5	9.5 - 13.7 ipm 10.8 - 15.7 ipm 12 - 17.8 ipm	

This WPS may vary due to fabrication sequence, fit up, pass size, etc., within the limitations of variables given in section 5.

Year of Code: 2008
Company Name: CanAm Steel Corporation
Authorized By: John Barrier
Date: 8/11/2009

WTTI
WELDER TRAINING AND TESTING INSTITUTE
WWW.WTTI.COM
1144 N. GRAHAM ST. · ALLENTOWN, PA 18109 · TEL 610-820-9551 · FAX 610-820-0271

LABORATORY TEST REPORT

LABORATORY TEST NUMBER: 200907110
COMPANY NAME: CanAm Steel Corporation
WELDER'S NAME: Joseph T. Shillingburg
PROCEDURE NUMBER: P1-2674F
PROCESS: SAW
POSITION: 2F
MATERIAL SPECIFICATION: A-709 Gr.50W to A-709 Gr.50W
THICKNESS: 1/2" - 1.00"
DIAMETER: n/a

TENSILE TEST RESULTS

MINIMUM TENSILE REQUIRED Tensiles not required

	#1	*#2*
	in.	in.
THICKNESS:	in.	in.
AREA:	sq. in.	sq. in.
ULTIMATE TENSILE LOAD:	lbs.	lbs.
ULTIMATE TENSILE STRENGTH:	psi	psi
LOCATION OF FAILURE:		

GUIDED BENDS OR FILLET WELD TEST RESULTS

SPECIMEN TYPE & FIGURE NO.	*RESULTS*
#1: Macroetch per Figure 5.8	PASSED
#2: Macroetch per Figure 5.8	PASSED
#3: Macroetch per Figure 5.8	PASSED
#4: n/a	

OTHER: Visual - PASSED

WELDING OF TEST SAMPLE WITNESSED BY: Patrick F. Dorris CWI / WTTI
LABORATORY TEST CONDUCTED BY: Jeffrey T. Wiswesser CWI / WTTI
LAB TEST CONDUCTED IN ACCORDANCE WITH: AWS D1.5-2008
DATE: 7/30/2009
COMMENTS: Lincolnweld LA-75 Filler Wire
FINAL STATUS: PASSED

SIGNATURE:

AWS QC 1
JEFFREY T. WISWESSER
99070451
CWI

NUCOR
PLATE MILL

P.O.Box 279
Wipton, NC 27986
(252) 356-3700

Mill Test Report

Page 2

NUCOR
It's our Nature

Issuing Date : 01/07/2008 B/L No. : 187390 Load No. : 189478 Our Order No. : 60100/6 Cust. Order No. : ONT-315

Vehicle No: PTTX 137009

Specification : 1.0000" x 98.000" x 960.000"*
AASHTO M270 GR50W&345W T3/ASTM A709-07 GR50W&345W T3
Grade A/B

Sold To : CHAPEL STEEL CO
P O Box 1000
FAX# 215-793-9415
SPRINGHOUSE,PA 19477

Ship To : EASTERN BRIDGE LLC
SPRINGFIELD TERMINAL
116 CLAREMONT JUNCTION
CLAREMONT,NH 03743

Marking :

Heat No	C	Mn	P	S	Si	Cu	Ni	Cr	Mo	Alz	V	Nb	Ti	N	Ca	B	Sn	CEQ	PCM
8100186	0.17	1.14	0.013	0.006	0.31	0.28	0.22	0.53	0.01	0.028	0.035	0.001	0.004		0.0001	0.0003	0.008	0.51	0.29

Tensile Test								Charpy Impacts											
Plate Serial No	Pieces	Tons	Dir.	(psi) Yield	(psi) Tensile	Elongation % in 2"	Elongation % in 8"	Dir.	(ft-lbs) 1	(%) shear	(ft-lbs) 2	(%) shear	(ft-lbs) 3	(%) shear	(ft-lbs) Ave.	(%) shear	Size	Temp (°F)	Min Ave.
8100186-01	3	40.02	T	62,200	87,600		17.6	H-L	39.4		50.8		63.6		51.3		10mm	10	15
			T	60,600	87,000		18.9	H-L	43.5		46.2		57.3		49.0		10mm	10	15
								H-L	48.0		41.4		39.6		43.0		10mm	10	15
8100186-02	3	40.02	T	62,200	87,600		17.6	H-L	39.4		50.8		63.6		51.3		10mm	10	15
			T	60,600	87,000		18.9	H-L	43.5		46.2		57.3		49.0		10mm	10	15
								H-L	48.0		41.4		39.6		43.0		10mm	10	15

$$CE = C + \frac{(Mn + Si)}{6} + \frac{(Cr + Mo + V)}{5} + \frac{(Ni + Cu)}{15}$$

$$= 0.17 + \frac{(1.14 + 0.31)}{6} + \frac{(0.53 + 0.01 + 0.035)}{5} + \frac{(0.22 + 0.28)}{15}$$

>0.12

$$= 0.56$$

>0.45

Job #
PO # 7010-1
Item # Inv 6
Date # 1/23/08

NFCM, T3, 15ft-lbs @ +10 F (28J @ -12 C), H frequency. Temperature reduced by 15 F for each 10 ksi over 65 ksi ;

Manufactured to fully killed fine grain practice by Electric Arc Furnace. Welding or weld repair was not performed on this material. Mercury has not been used in the direct manufacturing of this material. Produced as continuous cast as-rolled discrete plate. Yield by 0.5EUL method unless otherwise specified. Ceq = C+(Mn/6)+((Cr+Mo+V)/5)+((Cu+Ni)/15)
Pcm = C+(Si/30)+(Mn/20)+(Cu/20)+(Ni/60)+(Cr/20)+(Mo/15)+(V/10)+5B
Melted and manufactured in the USA. ISO 9001-2000 certified (#12443-0) by SRI Quality System Registrar (#0985-09). PED 97/23/EC 7/2,Annex 1, Para. 4.3 Compliant. DIN 50049 3.1.B/EN 10204 3.1.B(2004), DIN EN 10204 3.1(2005) compliant. For ABS grades only, Quality Assurance certificate No. 03-MMPQA-182

We hereby certify that the contents of this report are accurate and correct. All test results and operations performed by the material manufacturer are in compliance with the applicable specifications.

T. A. Deprete

T. A. Deprete, Metallurgist

01/15/2008 8:23:50 AM

NUCOR
PLATE MILL

P.O.Box 279
Winton, NC 27986
(252) 356-3700

Mill Test Report

Page 1

NUCOR It's our Nature.

Issuing Date : 01/09/2008 B/L No. : 187706 Load No. : 189714 Our Order No. : 60100/1 Cust. Order No. : ONT-315

Vehicle No: PTTX 136539

Specification : 0.3750" x 98.000" x 960.000"
AASHTO M270 GR50W&345W T3/ASTM A709-07 GR50W&345W T3
Grade A/B

Sold To : CHAPEL STEEL CO
P O Box 1000
FAX# 215-793-9415
SPRINGHOUSE,PA 19477

Ship To : EASTERN BRIDGE LLC
SPRINGFIELD TERMINAL
116 CLAREMONT JUNCTION
CLAREMONT,NH 03743

Marking :

Heat No	C	Mn	P	S	Si	Cu	Ni	Cr	Mo	Alz	V	Nb	Ti	N	Ca	B	Sn	CEQ	PCM
8100187	0.18	1.16	0.016	0.007	0.33	0.30	0.23	0.53	0.01	0.032	0.030	0.001	0.003		0.0001	0.0004	0.013	0.52	0.30

Tensile Test								Charpy Impacts											
Plate Serial No	Pieces	Tons	Dir.	(psi) Yield	(psi) Tensile	Elongation % in 2"	Elongation % in 8"	Dir.	(ft-lbs) 1	(%) shear	(ft-lbs) 2	(%) shear	(ft-lbs) 3	(%) shear	(ft-lbs) Ave.	(%) shear	Size	Temp (°F)	Min Ave.
8100187-03	1	5.00	T	66,700	94,500		17.4	H-L	30.6		30.6		44.3		35.2		10mm	-5	15
			T	63,600	87,700		17.3	H-L	28.8		34.1		30.6		31.2		10mm	-5	15
								H-L	48.2		44.0		27.8		40.0		10mm	-5	15
8100187-04	3	15.00	T	66,700	94,500		17.4	H-L	30.6		30.6		44.3		35.2		10mm	-5	15
			T	63,600	87,700		17.3	H-L	28.8		34.1		30.6		31.2		10mm	-5	15
								H-L	48.2		44.0		27.8		40.0		10mm	-5	15
8100187-05	3	15.00	T	66,700	94,500		17.4	H-L	30.6		30.6		44.3		35.2		10mm	-5	15
			T	63,600	87,700		17.3	H-L	28.8		34.1		30.6		31.2		10mm	-5	15
								H-L	48.2		44.0		27.8		40.0		10mm	-5	15

Job #
PO # 7016-1
Item # 1m 1
Date # 1/23/08

NFCM, T3, 15ft-lbs @ +10 F (20J @ -12 C), H frequency. Temperature reduced by 15 F for each 10 ksi over 65 ksi ;

Manufactured to fully killed fine grain practice by Electric Arc Furnace. Welding or weld repair was not performed on this material. Mercury has not been used in the direct manufacturing of this material. Produced as continuous cast as-rolled discrete plate. Yield by 0.5EUL method unless otherwise specified. Ceq = C+(Mn/6)+((Cr+Mo+V)/5)+((Cu+Ni)/15)
Pcm = C+(Si/30)+(Mn/20)+(Cu/20)+(Ni/60)+(Cr/20)+(Mo/15)+(V/10)+5B
Melted and manufactured in the USA. ISO 9001-2000 certified (#12443-0) by SRI Quality System Registrar (#0985-09). PED 97/23/EC 7/2 Annex 1, Para. 4.3 Compliant. DIN 50049 3.1.B/EN 10204 3.1.B(2004), DIN EN 10204 3.1(2005) compliant. For ABS grades only, Quality Assurance certificate No. 08-MMPQA-182

We hereby certify that the contents of this report are accurate and correct. All test results and operations performed by the material manufacturer are in compliance with the applicable specifications.

T. A. Deprelis

T. A. Deprelis, Metallurgist

01/15/2008 8:21:52 AM

STRUCTAL BRIDGES, a division of Canam Steel Corp.

WELDING PROCEDURE SPECIFICATION

FCM AND NON FCM WELDS

WPS Number: S-1009	Issue date:03-07-2013
Project: Jamaica VT., ER-BRF-015-1(23)	STRUCTAL job #.:UPO 1195
Base metal: ASTM A709 GR 36,50,50W, HPS 50W.	
Welding process: Submerged Arc Welding	
Filler metal spec. AWS, A5.17 ESAB SpoolArc 81	
Flux / shielding gas: ESAB 10.71	
Current and polarity: DCEN	Electrical stickout:11/2" +/- 1/4"
Welding position: 1 and 2F	
Preheat temp..:AWS D1.5 Table 4.3 / 12.3	WPS qualification:AWS D1.5 / section 5
Heat input: 43.87 - 65.83 Kilojoules	Supporting PQR#: SAW, PQR ORTHO 1G DCEN Rev 0.

electrode size	welding amps	current volts	travel speed
1/8"	585 - 680	32.5 - 35.5	22 - 26

Joint Detail : T joint

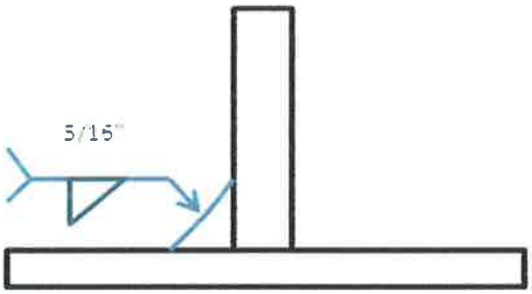

Notes: For welding 5/16" fillet welds.

Minimum preheat and interpass temperatures per AWS D1.5 Table 4.3 / 12.3

Maximum interpass temp. shall be 450˚F

Thickness of thickest part at point of welding	FCM	Non FCM
up to 3/4"	125˚F	50˚F
3/4" to 1 1/2"	200˚F	70˚F
1 1/2" to 2 1/2"	300˚F	150˚F
over 2 1/2"	350˚F	225˚F

This procedure may vary due to fabrication sequence, fit up, pass size, etc. within the limits provided in the contract documents and the AWS D1.5, 2010 Bridge Welding Code.

Lehigh Testing Laboratories, Inc.
A Subsidiary of THE MMR GROUP, INC.
308 WEST BASIN ROAD • P.O. BOX 903 • NEW CASTLE, DE 19720
(302) 328-0500 • FAX (302) 328-0417

THE MMR GROUP, INC.
an ESOP Company

TEST REPORT

*Updated 7-6-11***

STRUCTAL BRIDGES – DIVISION OF CANAM
ATTENTION: ALAIN DAIGNEAULT
386 RIVER ROAD
CLAREMONT, NH 03743

DATE: March 28, 2011

P.O. NO: VERBAL

LEHIGH NO: **M-55-25**
Sample 1

PAGE: 1 of 2

MATERIAL: ASTM A709 GR 50W Base (Filler Metal Electrode/Flux Classification AWS A5.17, E7A5-EM12K-H8)
SPECIFICATION: New York State SCM, 3rd Edition, (Fig. 907)/ AWS D1.5-10 Procedure Qualification - FCM
SAMPLE DESIGNATION: (1) SAMPLE PLATE: **1" THICK, SAW, PQR ORTHO 1G DCEN, Rev 0**
POSITION: 1G
WELDER: TIM BROWN, ID 500128

MECHANICAL PROPERTIES (Per ASTM A370-10)

	Reduced Section Tensiles (Per Para 806 (a)/ Para 5.18.1)		All Weld Metal Tensiles (Per Para 806 (c)/ Para 5.18.4/ASTM A370-10)	
	1A	1B	1-1	1-2
Width (inches)	1.020	1.031	----	----
Thickness (inches)	0.962	0.970	----	----
Diameter (inches)	----	----	0.506	0.506
Area (square inches)	0.9812	1.001	0.2011	0.2011
Yield Strength (ksi) 0.2% Offset	----	----	82	80
Tensile Strength (ksi)	94	92	92	93
Elongation (%) in 1"	46	38	(2") 24	(2") 24
Reduction of Area (%)	36	34	55	45
Ultimate Load (lbs.)	91,960	92,350	18,538	18,642
Location & Character of Failure	Weld/Ductile	Weld/Ductile	----	----

***MACROS (Per Para 806 (b)/ Para 5.18.2)**
1A. SATISFACTORY
1B. SATISFACTORY
1C. SATISFACTORY

SIDE BEND TESTS (Per Para 806 (b)/ Para 5.18.3)
1A. SATISFACTORY
1B. SATISFACTORY
1C. SATISFACTORY
1D. SATISFACTORY

Based on the above testing this material **meets** the tensile, bend and macro requirements of the above specifications.

*Weld thickness could not be measured due to backing plate.

*** Dual certified report to include Specification AWS D1.5-10.*

Lehigh Testing Laboratories, Inc.

Kyle D. LePore

Kyle D. LePore, Metallography Technician

Kenneth M. Petito

Kenneth M. Petito, Supvr., Mechanical Testing

This certificate of report shall not be reproduced, except in full, without written approval of Lehigh Testing Laboratories, Inc. Testing relates only to item(s) tested. The recording of false, fictitious or fraudulent statements or entries in this document may be punishable as a felony under Federal Statutes.Form 500

Lehigh Testing Laboratories, Inc.
A Subsidiary of THE MMR GROUP, INC.
308 WEST BASIN ROAD • P.O. BOX 903 • NEW CASTLE, DE 19720
(302) 328-0500 • FAX (302) 328-0417
www.lehightesting.com

THE MMR GROUP, INC.
an ESOP Company

RADIOGRAPHY TEST REPORT

DATE	MARCH 25, 2011	SOURCE	IR.192
PO NO.	VERBAL	CURIES	49
LTL NO.	M-55-25-(SAMPLE #1)	KILOVOLTS	N/A
PART NO.	TIM BROWN - (100251)	MILLIAMPS	N/A
SERIAL NO.	WPQR# SAW-ORTHO-1G-DCEN	EXPOSURE (MIN)	10:30
MATERIAL & THK	ASTM-A709-GR.-50W-F.C.M.-C/S 1"	FOCAL DIST (IN)	SOD-13.75" OFD-1.25"
SPEC	NYS SCM 3RD ED.-SEC 16 (FIG. 901)	PEN SIZE	20
TYPE FILM	FUJI IX 50	SHIM SIZE	N/A
NO. & SIZE	(3) DOUBLE LOADED 4.5 X 17	DENSITY	2.5 - 3.0

ATTN:
Project: **STRUCTAL BRIDGES**

386 RIVER ROAD
CLAREMONT, NH.
03743

EFFECTIVE FOCAL SPOT SIZE 0.146 EXPOSURE; SINGLE X DOUBLE
VIEWING; SINGLE X DOUBLE

LTL PROCEDURE - QA-NDE-P-002-REV-7

SERIAL NO. & OR VIEW NO. NYSSCM	ACCEPTED	REJECTED	INCOMPLETE PENETRATION	INCOMPLETE FUSION	UNDERCUT	CRACKS	POROSITY	INCLUSIONS	UNFUSED CHAPLETS	SHRINKAGE	ROOT SUCK UP	OTHER	REMARKS
PQR-ORTHO-DCEN													CONTRACT# BRCR270C/P
SAW													WITNESSING WAIVED PER. E-MAIL.
1G - FLAT													
1 - 2	√											1	SURFACE - FILM ARTIFACT
2 - 3	√											1	FILM ARTIFACT
3 - 4	√											1	SURFACE - FILM ARTIFACT

DEFECT SEVERITY CODE (1) PRESENT BUT ACCEPTABLE
(3) UNACCEPTABLE

QUANTITY INSPECTED	1
NUMBER ACCEPTED	1
NUMBER REJECTED	0

OK
03-29-11
SR Mill
DENNON 1

Lehigh Testing Laboratories, Inc.
David C. Staats
DAVID C. STAATS LEVEL II, RT

This certificate of report shall not be reproduced, except in full, without written approval of Lehigh Laboratories, Inc. Testing relates only to item(s)tested. The recording of false or fraudulent statements or entries in this document may be punishable as a felony under Federal Statutes.

Revision 1: 8/29/03

NEW YORK CITY
DEPARTMENT OF TRANSPORTATION
WELDING PROCEDURE QUALIFICATION RECORD
WPQR # POR Ortho 1G-DCEN, Rev 0

Fabricator: Structal Bridges -Claremont Date Prepared: ~~03/16/11~~ 4/4/11 Date Welded: 03/16/11

Process: SAW Position: 1G (Flat) No. of Passes: 12 Fore (back)-Hand (Circle One)

Filler Metal Specification: AWS A5.17 Filler Metal Classification: F7A5-EM12K-H8

Electrode(s) & Manufacturer: ESAB Spoolarc 81 Manual, Semiautomatic or Automatic: Automatic

Electrode	Diameter	Stickout	Amps	Volts	Current	Polarity	Wire Feed Speed	Travel Speed
1	1/8	1 ½"	650	33	DC-	~~Reverse~~ Straight		22.8 IPM

Flux: ESAB OK10.71 Shielding Gas: NA Flow Rate: NA Dew Point: NA

Material Specification, Thickness & Heat No: ASTM A709-50W 1" Plate HT#0506175 3/8" Bkg Bar: HT#0506343

Preheat Temp: 225°F Interpass Temp: 250°F Welded by: Tim Brown Clock #: 500128

Weld Witnessed by: Steve Miller 03-17-11 Agency: Pennoni Associates, Inc.

SPECIMEN	TESTS RESULTS		
All Weld Metal Tension (AWMT)	Tensile Strength (psi)	92 (1)	93 (2)
	Yield Strength (psi)	82	80
	Elongation in 2" (%)	24	24
	Reduction in Area (%)	55	45
Side Bends	1. Good 2. Good 3. Good 4. Good		
Reduced Section Tension	Tensile Strength 1. 94 2. 92	Location of Break 1. Weld/Ductile 2. Weld/Ductile	
Charpy Impact (Weld Metal)	(64, 60, 74, 62, 70)	Avg. Ft. Lbs. 65 @ -20 °F	
	(_, _, _, _, _)	Avg. Ft. Lbs. _ @ _ °F	
	ESW & EGW (_, _, _, _, _, _, _, _)	Avg. Ft. Lbs. _ @ _ °F	
Chemistry X	C. _ Mn _ P. _ S. _ Si. _ Ni. _ Cr. _ Mo. _ V. _		
Macroetch	SATISFACTORY		

Radiographic Test by: David C. Shaw, Level III Agency Lehigh Testing Lab.

Radiograph Exam'd by: [signature] Agency PENNONI

Radiograph Test: Acceptable X-Ray or Radiography Analysis is performed on this PQR coupon used for structural steel requirements Bridge only.

Heat Treatment: N/A

Welding and Testing in Accordance with NYSSCM 3rd Edition

NYCDOT BRIDGES QUALITY ASSURANCE FABRICATION ENGINEERING UNIT

APPROVED

✓ APPROVED AS NOTED

3/16/2016

EXPIRATION DATE

DISAPPROVED

[signature] 4/12/11

REVIEWER DATE

[signature] 4/12/11

DIRECTOR

To: Structal Bridge
Re: Contract No. BRC270C/P
Subject: WPQR # PQR-Ortho 1G-DCEN, Rev. 0

April 12, 2011

For your record, please find the attached Welding Procedure Qualification Record identified as WPQR # PQR Ortho 1G-DCEN, Rev. 0, stamped "Approved as Noted" by our Fabrication Engineering Unit (FEU).

A Welding Procedure Specification for each joint configuration to be used during production welding must be submitted for review and approval by FEU prior to the start of the welding.

The radiographs are being returned to you for your records. And, if you want the welder, Tim Brown, to be also qualified for the federally funded projects, you should send the radiographs to the NYSDOT for their review and approval.

Very truly yours

Muhammad Afzal, P.E.
Director-Quality Assurance
Division of Bridges

Enclosure
JL/tr

CC: Skanska, GPI, URS, Pennoni Associates, Inc.

NEW YORK CITY
Department of Transportation
JANETTE SADIK-KHAN, Commissioner

Structal Bridge
386 River Road
Claremont, NH 03743

April 12, 2011

Attention: Mr. Alain Daigneault

Re: Brooklyn Bridge - Rehabilitation of Approach Spans and Ramps and Painting of the Entire Bridge
Contract No. BRC270C/P
Welding Procedure Qualification Record No. PQR Ortho 1G-DCEN, Rev. 0

Dear Mr. Daigneault:

Reference is made to the SAW welding procedure qualification test performed on March 16, 2011. The automatic SAW process was performed on a 1" thick ASTM A709 Gr. 50W plate oriented in the flat position (1G). The WPQR test plate was prepared in accordance with Figure 801b of the New York State Steel Construction Manual (NYSSCM) with a vee groove joint having a 20° inclusive angle, 5/8" root opening and a 3/8" backing bar.

We have reviewed the reports of the WPQR mechanical tests including all weld metal tests, reduced section tests and Charpy V-Notch impact tests. We have also physically examined the radiographs, side bend specimens and macroetch specimens. These tests have been performed in accordance with the requirements of Sections 7 and 8 of the NYSSCM. The results substantively met with the established requirements set forth within this document. WPQR # PQR Ortho 1G-DCEN, Rev. 0 for the automatic SAW process utilizing 1/8" diameter ESAB Spoolarc 81 electrode, depositing in 12 weld passes, with DCEN at 650 Amps and 35 Volts, at a travel speed of 22.8 IPM is, therefore, acceptable for use on NYCDOT projects.

In addition, the welder Tim Brown, Clock # 500128, who performed this welding procedure qualification test, is qualified for automatic SAW welding in the positions stipulated in table 811.3 of the NYSSCM, for Non-Federally Funded NYCDOT projects.

NYC Department of Transportation
Division of Bridges; Bureau of Engineering Review & Support
55 Water Street, 5th Floor
New York, NY 10041
T: 212.839.4024 F: 212.839.4042
www.nyc.gov/dot

NUCOR PLATE MILL

P.O.Box 278
Winton, NC 27986
(252) 358-3700

Mill Test Report

Page 5

NUCOR It's our Nature.

Issuing Date : 08/02/2010
Vehicle No: NOKL 725035
Ml. No.: 271639
Load No.: 273238
Our Order No.: 84307716
Specification : 1.0000" x 96.000" x 450.000"
ASTM A588-A-06/A513-B-02/A709-09a 50W-04 345 50W-06/AASHTO
M270 50W
Sold To :
Cust. Order No. : 43464
Ship To :

Marking :

Heat No	C	Mn	P	S	Si	Cu	Ni	Cr	Mo	Al(ot)	V	Nb	Ti	N	Ca	B	Sn	CEQ	PCM
0506178	0.18	1.02	0.009	0.001	0.32	0.27	0.24	0.49	0.02	0.031	0.030	0.001	0.002		0.0045	0.0002	0.012	0.47	0.28

Tensile Test

Plate Serial No	Pieces	Tons	Dir.	(ksi) Yield	(ksi) Tensile	Elongation % in 2"	Elongation % in 8"
0506178-03	2	13.08	T	55,600	82,400		17.8
			T	55,400	79,000		19.3

Charpy Impacts

Dir.	(ft-lbs) 1	(%) shear	(ft-lbs) 2	(%) shear	(ft-lbs) 3	(%) shear	(ft-lbs) Ave.	(%) shear	Size	Temp (°F)	Min Ave.
H-L	145.9		213.2		204.4		187.5		10mm	-4	25
H-L	120.4		138.8		126.3		127.8		10mm	0	25

$$CE = C + \frac{(Mn+Si)}{6} + \frac{(Cr+Mo+V)}{5} + \frac{(Ni+Cu)}{15}$$

$$= 0.18 + \frac{(1.2+0.32)}{6} + \frac{(0.49+0.02+0.030)}{5} + \frac{(0.24+0.27)}{15}$$

$$= 0.575 \geq 0.45$$

Manufactured to fully killed fine grain practice by Electric Arc Furnace. Welding or weld repair was not performed on this material. Mercury has not been used in the direct manufacturing of this material. Produced as continuous cast electric plate as-rolled, unless otherwise noted in Specification.
Yield by 0.5% U.S. method unless otherwise specified. Ceq = C+(Mn/6)+((Cr+Mo+V)/5)+((Cu+Ni)/15)
Pcm = C+(Si/30)+(Mn/20)+(Cu/20)+(Ni/60)+(Cr/20)+(Mo/15)+(V/10)+5B
Melted and manufactured in the USA. ISO 9001-2000 certified (#0064461) by SRI Quality System Registrar (#0965-00). PED 97/23/EC 7/2 Annex 1, Para. 4.3 Compliant. DIN 50049 3.1, BEN 10204 3.1(2004), DIN EN 10204 3.1(2005) compliant. For ABS grades only, Quality Assurance certificate 08-HMPQA-353

We hereby certify that the contents of this report are accurate and correct. All test results and operations performed by the material manufacturer are in compliance with the applicable specifications, including customer specifications.

T.A. Deprelle, Metallurgist

08/02/2010 10:32:31 AM

NUCOR
PLATE MILL

P.O.Box 279
Winton, NC 27986
(252) 358-5700

Mill Test Report

Page 6

NUCOR
It's our Nature.

Issuing Date : 02/12/2010
Vehicle No: NOKL 730911
Bl. No.: 272276
Load No.: 273991
Our Order No.: 84362712
Cust. Order No.: 43484
Specification : 0.3750" x 96.000" x 480.000"
ASTM A588-A-05/A588-B-05/A709-09a 50W-04 345 50W-08/AASHTO M270 50W

Sold To :

Ship To :

Marking :

Heat No	C	Mn	P	S	Si	Cu	Ni	Cr	Mo	Al(tot)	V	Nb	Ti	N	Ca	B	Sn	CEQ	PCM
0506955	0.17	1.04	0.011	0.001	0.34	0.29	0.21	0.47	0.02	0.032	0.027	0.002					0.011	0.48	0.28
0506343	0.16 ✓	1.04 ✓	0.014	0.001	0.34 ✓	0.30	0.22	0.48	0.02	0.028	0.029	0.002	0.003		0.0031	0.0004	0.013	0.48	0.28

Tensile Test

Plate Serial No	Pieces	Tons	Dir.	(ksi) Yield	(ksi) Tensile	Elongation % in 2"	Elongation % in 8"
0506955-02	1	2.45	T	60,200	83,600		20.5
			T	52,800	82,600		17.9
0506343-02	2	4.90	T	55,600	81,600		20.0
			T	63,200	85,700		20.1

Charpy Impacts

Dir.	(ft-lbs) 1	(%) shear	(ft-lbs) 2	(%) shear	(ft-lbs) 3	(%) shear	(ft-lbs) Avg.	(%) shear	Size	Temp (°F)	Min Avg.
H-L	68.0		52.6		76.9		65.5		10mm	0	25
H-L	28.1		26.0		59.7		37.9		10mm	0	25
H-L	30.0		31.1		31.2		30.8		10mm	0	25
H-L	26.5		24.3		32.1		27.6		10mm	-22	25

$$CE = 0.16 + \frac{(1.04 + 0.34)}{6} + \frac{(0.48 + 0.02 + 0.029)}{5} + \frac{(0.22 + 0.30)}{15}$$

$$= 0.53 \geq 0.45$$

Manufactured to fully killed fine grain practice by Electric Arc Furnace. Welding or weld repair was not performed on this material. Mercury has not been used in the direct manufacturing of this material. Produced as continuous cast discrete plate as-rolled, unless otherwise noted in Specification.
Yield by 0.5% U.E. method unless otherwise specified. Ceq= C+(Mn/6)+((Cr+Mo+V)/5)+((Cu+Ni)/15)
Pcm=C+(Si/30)+(Mn/20)+(Cu/20)+(Ni/60)+(Cr/20)+(Mo/15)+(V/10)+5B
Melted and manufactured in the USA. ISO 9001-2000 certified (#0094451) by SRI Quality System Registrar (#0935-08). PED 97/23/EC 7/E Annex 1, Para. 4.3 Compliant. DIN 50049 3.1/EN 10204 3.1(1995), DIN EN 10204 3.1(2005) compliant. For ABS grades only, Quality Assurance certificate 08-HSUPQA-163

We hereby certify that the contents of this report are accurate and correct. All test results and operations performed by the material manufacturer are in compliance with the applicable specifications, including customer specifications.

T. A. Deportis

T.A. Deportis, Metallurgist

02/12/2010 3:12:50 PM

Lehigh Testing Laboratories, Inc.
A Subsidiary of THE MMR GROUP, INC.
306 WEST BASIN ROAD • P.O. BOX 903 • NEW CASTLE, DE 19720
(302) 328-0500 • FAX (302) 328-0417

THE MMR GROUP, INC.
an ESOP Company

TEST REPORT

*Updated 7-6-11***

STRUCTAL BRIDGES – DIVISION OF CANAM
ATTENTION: ALAIN DAIGNEAULT
386 RIVER ROAD
CLAREMONT, NH 03743

DATE: March 28, 2011
P.O. NO: **VERBAL**
LEHIGH NO: **M-55-25 Sample 1**
PAGE: 2 of 2

MATERIAL: ASTM A709 GR 50W Base (Filler Metal Electrode/Flux Classification AWS A5.17, E7A5-EM12K-H8)
SPECIFICATION: New York State SCM, 3rd Edition, (Fig. 907)/ AWS D1.5-10 Procedure Qualification - FCM
SAMPLE DESIGNATION: (1) SAMPLE PLATE: **1" THICK, SAW, PQR ORTHO 1G DCEN, Rev 0**
POSITION: 1G
WELDER: TIM BROWN, ID 500128

WELD IMPACT PROPERTIES (Per Para. 806(d)/ Para 5.18.5/ASTM A370-10)

Lehigh No.	Customer ID	Test Temp.	Impact Energy (Ft.-Lbs.)	Lateral Expansion (Mils)	Shear (%)
M-55-25-1	PQR ORTHO 1G DCEN, Rev 0	-20° F	64	52	25
		-20° F	60	54	25
		-20° F	74	60	25
		-20° F	62	51	25
		-20° F	70	61	25
		AVG*	**65**	**55**	**25**

Specimen Size: 10mm x 10mm

*Average per NYSSCM, Para 807.4 and AWS D1.5, Para 5.19.5.1.

Based on the above testing this material **meets** the impact requirement of the above specifications.

** *Dual certified report to include Specification AWS D1.5-10.*

Lehigh Testing Laboratories, Inc.

Kenneth M. Petito

Kenneth M. Petito, Supvr., Mechanical Testing

This certificate of report shall not be reproduced, except in full, without written approval of Lehigh Testing Laboratories, Inc. Testing relates only to item(s) tested. The recording of false, fictitious or fraudulent statements or entries in this document may be punishable as a felony under Federal Statutes.Form 500

STRUCTAL BRIDGES, a division of Canam Steel Corp.

WELDING PROCEDURE SPECIFICATION

FCM AND NON FCM WELDS

WPS Number: FC-1001A	Issue date:03-07-2013
Project: Jamaica VT., ER-BRF-015-1(23)	STRUCTAL job #.: UPO 1195
Base metal: ASTM A709 GR 36,50,50W, HPS 50W.	
Welding process:Flux Cored Arc Welding	
Filler metal spec. AWS,A5.29 ESAB DualShield 810X-Ni1	
Flux / shielding gas:100% CO_2	
Current and polarity: DCEP	Electrical stickout: 3/4" +/- 1/4"
Welding position: 1F and 2F	
Preheat temp..:AWS D1.5 Table 4.3 / 12.3	WPS qualification:AWS D1.5 / section 5
Heat input: 35.34 - 49.00, Kilojoules	Supporting PQR#:FCAW-PQR-50W-50W-1G-WM23, REV.1

electrode size	welding amps	current volts	travel speed
1/16"	300 - 345	27 - 29	12.25 -13.75

Joint Detail :T joint

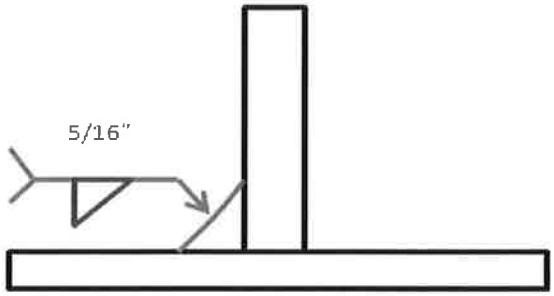

Minimum preheat and interpass temperatures per AWS D1.5 Table 4.3 / 12.3

Maximum interpass temp. shall be 450°F

Thickness of thickest part at point of welding	FCM	Non FCM
up to 3/4"	125°F	50°F
3/4" to 1 1/2"	200°F	70°F
1 1/2" to 2 1/2"	300°F	150°F
over 2 1/2"	350°F	225°F

This procedure may vary due to fabrication sequence, fit up, pass size, etc. within the limits provided in the contract documents and the AWS D1.5, 2010 Bridge Welding Code.

PROCEDURE QUALIFICATION RECORD

PQR NUMBER:FCAW-PQR-50W-50W-1G-WM23 Rev.1

Welder's Name Daryl HASTINGS ID Employee# 1185 Welding Test Date 02-15-2011

Process FCAW Position 1G ESO 3/4" Joint Detail : B-U2a-GF

Electrode(s) Mfg. Designation ESAB DualShield810XNi1 Elect.Class. E81T1 – Ni1C AWS FluxDesig. N/A

Post Weld Heat Treatment :Temp N/A Hold Time N/A Heating/Cooling Rate N/A

	Diameter	Current	WFS*	Voltage	Current & Polarity
Electrode (1)	1/16"	327.6	----	28.9	DCEP
Electrode (2)					
Electrode (3)					

Calculated Heat Input (see 5.12) 45.4 kJ/in. per 5.13

Shielding Gas CO_2 Dew Point -40C Flow Rate 40-45 CFH Gas Cup Size 5/8"

Travel Speed: Min. 12.5 IPM average Max. --

Base Metal Specification and Thickness A709 Gr.50W, 1" Heat Number 0506176

Backing Metal Specification and Thickness A709 Gr.50W, 3/8" Heat Number 0506343

Base metal Carbon Equivalent (see 5.4.2) 0.575

(See attached the Certified Mill Test Report for Base and Backing Materials)

Preheat Temp. 250F Interpass Temp. : Min. 250F Max. 550F

SPECIMEN **TEST RESULTS**

AWMT : Tensile Strength 94 ksi Yield Strength 84 ksi Elong.% In 50mm 25 ROA (%) 59

Visual Inspection: x Acceptable Unacceptable **Macro Test: x Acceptable Unacceptable

Side Bends 1. Satisfactory 2. Satisfactory 3. Satisfactory 4. Satisfactory

Reduced Section Tension: Tension Strength (ksi) 1. 98 Location of Break 1. Base / ductile

2. 95 Location of Break 2. Base / ductile

Charpy V-Notch Impact (93 , 104 , 89 , 80 , 86)

Toughness of Weld Metal (93 , 89 , 86)

SMAW, SAW, FCAW, GMAW – 5 Req'd. [a]Avg. 89 ft.lbs@ -20° F

ESW and EGW – 8 Req'd.

**Chemistry of Deposited Weld Metal C 0.06 Mn 1.32 Si 0.58 P 0.002 S <0.001

When Required by contract Documents* Ni 0.90 Cr 0.10 Mo 0.01 V 0.03 Cu 0.08

Radiographic Test: x Acceptable Unacceptable Remarks:

Fillet Weld Soundness Maximum Size Single Pass : 5/16" 1. Acceptable 2. Acceptable 3. Acceptable

Macroetch Minimum Size Multiple pass: 3/8" 1. Acceptable 2. Acceptable 3. Acceptable

We, the undersigned, certify that the above described WPQR/FWS has been qualified in accordance with Clause 5 of the AASHTO / AWS D1.5M/D1.5, (2008) Bridge Welding Code.

Year

State/3rd party Witness William Campbell

Date 02-15-2011

WILLIAM A. CAMPBELL
CWI 94079411
OCI EXP 07/01/12

Agency Results Reviewed Jacqueline Ouellet

Date

Mfr./Contractor Manufacturer: Structal, div. Canam

Authorized By A.Daigneault

Date MARCH 3, 2011

INGÉNIEUR - ENGINEER
Alain Daigneault
QUÉBEC

A. Daigneault CWB LEVEL 2 #5120

*Optional; **Optional for CJP; [a]Discard the highest and lowest values and average the 3 remaining.

Structal Form Rev.0 / 2011-02-12

Lehigh Testing Laboratories, Inc.
A Subsidiary of THE MMR GROUP, INC.
308 WEST BASIN ROAD • P.O. BOX 903 • NEW CASTLE, DE 19720
(302) 328-0500 • FAX (302) 328-0417
www.lehightesting.com

THE MMR GROUP, INC.
an ESOP Company

RADIOGRAPHY TEST REPORT

ATTN:
Project:

STRUCTAL BRIDGES
DIVISION OF CANAM

4011 CLAY STREET
POINT OF ROCKS, MD.
21777

DATE	FEBRUARY 24, 2011	SOURCE	IR 192
PO NO.	VERBAL	CURIES	64
LTL NO.	M-51-12	KILOVOLTS	N/A
PART NO.	DARYL HASTINGS	MILLIAMPS	N/A
SERIAL NO.	FCAW-PQR-50W-50W-1G-WM-23-REV-1	EXPOSURE (MIN)	7:45
MATERIAL & THK	ASTM-A709-GR.50W-C/S 1"	FOCAL DIST (IN)	SOD-13.75" OFD-1.25"
SPEC	AWS D1.5 - 08 (F.C.M.)	PEN SIZE	20
TYPE FILM	FUJI IX 50	SHIM SIZE	N/A
NO. & SIZE	(2) DOUBLE LOADED 4.5 X 17	DENSITY	2.2 - 2.8

EFFECTIVE FOCAL SPOT SIZE 0.146 EXPOSURE; SINGLE X DOUBLE
VIEWING; SINGLE X DOUBLE

LTL PROCEDURE - QA-NDE-P-002-REV-7

SERIAL NO. & OR VIEW NO.	ACCEPTED	REJECTED	INCOMPLETE PENETRATION	INCOMPLETE FUSION	UNDERCUT	CRACKS	POROSITY	INCLUSIONS	UNFUSED CHAPLETS	SHRINKAGE	ROOT SUCK UP	OTHER	REMARKS
FCAW-PQR													
50W-50W-WM-23-REV-1													CONTRACT# 2010CB004
FLAT - 1G													
1 - 2	√											1	FILM ARTIFACT
2 - 3	√											1	FILM ARTIFACT

TYPES OF DEFECTS EXHIBITED

DEFECT SEVERITY CODE (1) PRESENT BUT ACCEPTABLE
(3) UNACCEPTABLE

QUANTITY INSPECTED	1
NUMBER ACCEPTED	1
NUMBER REJECTED	0

Lehigh Testing Laboratories, Inc.

David C. Staats

DAVID C. STAATS Level II, RT

This certificate of report shall not be reproduced, except in full, without written approval of Lehigh Laboratories, Inc. Testing relates only to item(s)tested. The recording of false or fraudulent statements or entries in this document may be punishable as a felony under Federal Statutes.

Form 500

Lehigh Testing Laboratories, Inc.
A Subsidiary of THE MMR GROUP, INC.
308 WEST BASIN ROAD • P.O. BOX 903 • NEW CASTLE, DE 19720
(302) 328-0500 • FAX (302) 328-0417

THE MMR GROUP, INC.
an ESOP Company

TEST REPORT

STRUCTAL BRIDGES – DIVISION OF CANAM
ATTENTION: ALAIN DAIGNEAULT
386 RIVER ROAD
CLAREMONT, NH 03743

DATE: February 25, 2011

P.O. NO: VERBAL
LEHIGH NO: **M-51-13**

PAGE: 1 of 1

MATERIAL: ASTM A709 GR 50W
SPECIFICATION: AWS D1.5-08, FCM Fillet Weld Soundness Qualification
SAMPLE DESIGNATION: (1) SAMPLE: PQR NO. FCAW-PQR-50W-50W-1, 2F-WM-23 REV. 1, 5/16" SINGLE PASS,
WELDER: DARYL HASTINGS

MACROS (Per Para. 5.19.3)
(Single Pass)

	A	B	C
No. Cracks:	Acceptable	Acceptable	Acceptable
Thorough Fusion:	Acceptable	Acceptable	Acceptable
Weld Profiles:	Acceptable	Acceptable	Acceptable
No Undercut Exceeding 1mm:	Acceptable	Acceptable	Acceptable
Fillet Weld Leg Size:	Acceptable	Acceptable	Acceptable
Fillet Weld Fusion:	Acceptable	Acceptable	Acceptable

Single Pass requirement is **acceptable** per AWS D1.5-08 Fillet Weld Soundness Qualification.

Lehigh Testing Laboratories, Inc.

Kyle D. LePore

Kyle D. LePore, Metallography Technician

This certificate of report shall not be reproduced, except in full, without written approval of Lehigh Testing Laboratories, Inc. Testing relates only to item(s) tested. The recording of false, fictitious or fraudulent statements or entries in this document may be punishable as a felony under Federal Statutes. Form 500

STRUCTAL Bridges a division of CANAM GROUP INC.

FILLET WELD PQR WELDING PARAMETERS RECORD

FCAW - PQR - 50 - 50W Rev. 2

PQR # 1,2F - WM 23 DATE 3-4-11 WELDER Daryl Hastings

FILLET SIZE	PASS	VOLT	AMP	TRAVEL SPEED (In/Min.)
3/8	1	28.5	315	15
	2	28.5	315	15
	3	28.5	315	15
	4			
	5			
	6			

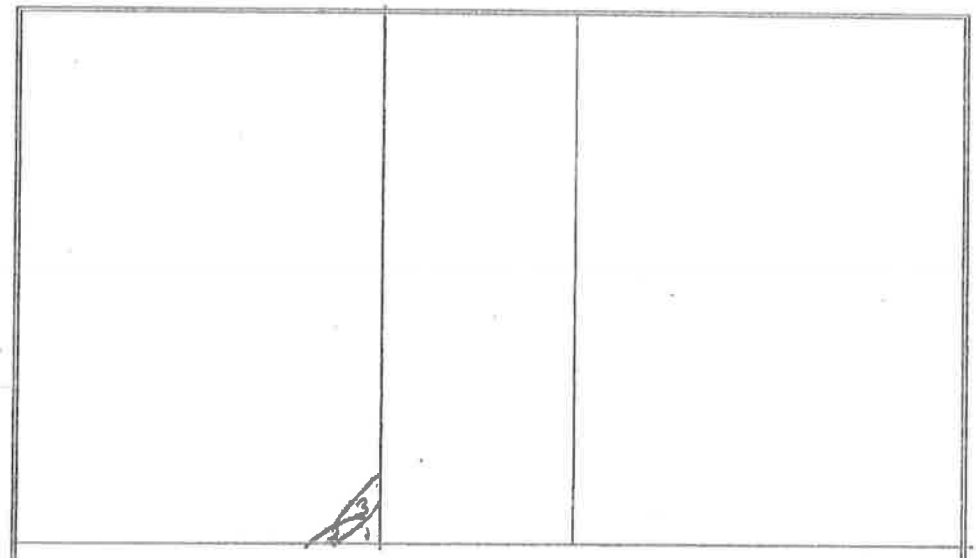

Macroetch Accepted per D1.5

RIDOT - William A Campbell

JOINT DETAIL

3rd Party Test Witness

Co. Name _____ CWI Signature _____

Fabricator's Representative Signature O. Daigneault

Witnessed William A Campbell

WILLIAM A. CAMPBELL
CWI 94070411
QC1 EXP. 07/01/12

Lehigh Testing Laboratories, Inc.
A Subsidiary of THE MMR GROUP, INC.
308 WEST BASIN ROAD • P.O. BOX 903 • NEW CASTLE, DE 19720
(302) 328-0500 • FAX (302) 328-0417

THE MMR GROUP, INC.
an ESOP Company

TEST REPORT

STRUCTAL BRIDGES – DIVISION OF CANAM
ATTENTION: ALAIN DAIGNEAULT
386 RIVER ROAD
CLAREMONT, NH 03743

DATE: February 25, 2011
P.O. NO: **VERBAL**
LEHIGH NO: **M-51-12**
PAGE: 1 of 1

MATERIAL: ASTM A709 GR 50W Plate (Filler Metal Classification AWS A5.29, E81T1-Ni1C)
SPECIFICATION: ASME SECTION II, PART C 2010, SFA-AWS A5.29, E81T1-Ni1C
SAMPLE DESIGNATION: (1) SAMPLE PLATE: **1" THICK, FCAW,**
PQR NO. FCAW-PQR-50W-50W-1G-WM-23 REV. 1,
POSITION: 1G
WELDER: DARYL HASTINGS

CHEMICAL ANALYSIS (%)
WELD METAL

Carbon	0.06
Sulfur	<0.001
Manganese	1.32
Silicon	0.58
Phosphorus	0.002
Chromium	0.10
Nickel	0.90
Molybdenum	0.01
Aluminum	0.01
Vanadium	0.03

Based on the above analysis this material **meets** the chemical requirements of ASME Section II, Part C 2010, SFA-AWS A5.29, E81T1-Ni1C.

LTL Procedure: QA-CH-P-048 Rev 1 (Leco C&S)
QA-CH-P-124 Rev 1 (ICP)

Lehigh Testing Laboratories, Inc.

Peter M. Engelgau

Peter M. Engelgau, Principal Chemist

This certificate of report shall not be reproduced, except in full, without written approval of Lehigh Testing Laboratories, Inc. Testing relates only to item(s) tested. The recording of false, fictitious or fraudulent statements or entries in this document may be punishable as a felony under Federal Statutes. Form 500

Lehigh Testing Laboratories, Inc.
A Subsidiary of THE MMR GROUP, INC.
308 WEST BASIN ROAD • P.O. BOX 903 • NEW CASTLE, DE 19720
(302) 328-0500 • FAX (302) 328-0417

THE MMR GROUP, INC.
an ESOP Company

TEST REPORT

UPDATED: 3/3/11*

STRUCTAL BRIDGES – DIVISION OF CANAM
ATTENTION: ALAIN DAIGNEAULT
386 RIVER ROAD
CLAREMONT, NH 03743

DATE: February 25, 2011

P.O. NO: **VERBAL**

LEHIGH NO: **M-51-12**

PAGE: 1 of 1

MATERIAL: ASTM A709 GR 50W Plate (Filler Metal Classification AWS A5.29, E81T1-Ni1C)
SPECIFICATION: ASME SECTION II, PART C 2010, SFA-AWS A5.29, E81T1-Ni1C
SAMPLE DESIGNATION: (1) SAMPLE PLATE: **1" THICK, FCAW,**
PQR NO. FCAW-PQR-50W-50W-1G-WM-23 REV. 1,
POSITION: 1G
WELDER: DARYL HASTINGS

CHEMICAL ANALYSIS (%)
WELD METAL

Carbon	0.06
Sulfur	<0.001
Manganese	1.32
Silicon	0.58
Phosphorus	0.002
Chromium	0.10
Nickel	0.90
Molybdenum	0.01
Aluminum	0.01
Vanadium	0.03
Copper	0.08

Based on the above analysis this material **meets** the chemical requirements of ASME Section II, Part C 2010, SFA-AWS A5.29, E81T1-Ni1C.

LTL Procedure: QA-CH-P-048 Rev 1 (Leco C&S)
QA-CH-P-124 Rev 1 (ICP)

*Updated to include copper.

Lehigh Testing Laboratories, Inc.

Peter M. Engelgau

Peter M. Engelgau, Principal Chemist

This certificate of report shall not be reproduced, except in full, without written approval of Lehigh Testing Laboratories, Inc. Testing relates only to item(s) tested. The recording of false, fictitious or fraudulent statements or entries in this document may be punishable as a felony under Federal Statutes. Form 500

Lehigh Testing Laboratories, Inc.
A Subsidiary of THE MMR GROUP, INC.
308 WEST BASIN ROAD • P.O. BOX 903 • NEW CASTLE, DE 19720
(302) 328-0500 • FAX (302) 328-0417

THE MMR GROUP, INC.
an ESOP Company

TEST REPORT

STRUCTAL BRIDGES – DIVISION OF CANAM
ATTENTION: ALAIN DAIGNEAULT
386 RIVER ROAD
CLAREMONT, NH 03743

DATE: February 25, 2011
P.O. NO: **VERBAL**
LEHIGH NO: **M-51-12**
PAGE: 1 of 2

MATERIAL: ASTM A709 GR 50W Plate (Filler Metal Classification AWS A5.29, E81T1-Ni1C)
SPECIFICATION: AWS D1.5-08 (FIG 5.1), FCM Procedure Qualification
SAMPLE DESIGNATION: (1) SAMPLE PLATE: **1" THICK, FCAW,**
PQR NO. FCAW-PQR-50W-50W-1G-WM-23 REV. 1,
POSITION: 1G
WELDER: DARYL HASTINGS

MECHANICAL PROPERTIES (Per ASTM A370-09a$^{\epsilon 1}$)

	Reduced Section Tensiles (Per Para 5.18.1)		All Weld Metal Tensile (Per Para 5.18.4/ ASTM A370-09a$^{\epsilon 1}$)
	A	B	
Width (inches)	1.016	1.024	----
Thickness (inches)	0.895	0.938	----
Diameter (inches)	----	----	0.505
Area (square inches)	0.9093	0.9605	0.2003
Yield Strength (ksi) 0.2% Offset	----	----	84
Tensile Strength (ksi)	98	95	94
Elongation (%) in 1"	31	32	(2") 25
Reduction of Area (%)	44	48	59
Ultimate Load (lbs.)	89,030	91,670	18,863
Location & Character of Failure	Base/Ductile	Base/Ductile	

MACROS (Per Para 5.18.2)
A. SATISFACTORY
B. SATISFACTORY
C. SATISFACTORY

SIDE BEND TESTS (Per Para 5.18.3)
A. SATISFACTORY
B. SATISFACTORY
C. SATISFACTORY
D. SATISFACTORY

Based on the above testing this material **meets** the reduced section tensile, all weld metal tensile, bend and macro requirements of the above specification.

Lehigh Testing Laboratories, Inc.

Kyle D. LePore

Kyle D. LePore, Metallography Technician

Kenneth M. Petito

Kenneth M. Petito, Supvr., Mechanical Testing

This certificate of report shall not be reproduced, except in full, without written approval of Lehigh Testing Laboratories, Inc. Testing relates only to item(s) tested. The recording of false, fictitious or fraudulent statements or entries in this document may be punishable as a felony under Federal Statutes. Form 500

Lehigh Testing Laboratories, Inc.
A Subsidiary of THE MMR GROUP, INC.
308 WEST BASIN ROAD • P.O. BOX 903 • NEW CASTLE, DE 19720
(302) 326-0500 • FAX (302) 328-0417

THE MMR GROUP, INC.
an ESOP Company

TEST REPORT

STRUCTAL BRIDGES – DIVISION OF CANAM
ATTENTION: ALAIN DAIGNEAULT
386 RIVER ROAD
CLAREMONT, NH 03743

DATE: February 25, 2011
P.O. NO: **VERBAL**
LEHIGH NO: **M-51-12**
PAGE: 2 of 2

MATERIAL: ASTM A709 GR 50W Plate (Filler Metal Classification AWS A5.29, E81T1-Ni1C)
SPECIFICATION: AWS D1.5-08 (FIG 5.1), FCM Procedure Qualification
SAMPLE DESIGNATION: (1) SAMPLE PLATE: **1" THICK, FCAW,**
PQR NO. FCAW-PQR-50W-50W-1G-WM-23 REV. 1,
POSITION: 1G
WELDER: DARYL HASTINGS

WELD IMPACT PROPERTIES (Per Para 5.18.5/ASTM A370-09a$^{\epsilon 1}$)

Lehigh No.	Customer ID	Test Temp.	Impact Energy (Ft.-Lbs.)	Lateral Expansion (Mils)	Shear (%)
M-51-12	PQR #FCAW-PQR-50W-50W-1G-WM-23, REV 1	-20° F	93	71	30
		-20° F	104	74	30
		-20° F	89	68	30
		-20° F	80	65	30
		-20° F	86	70	30
		AVG*	**89**	**70**	**30**

Specimen Size: 10mm x 10mm

*Average per paragraph 5.19.5.1.

Based on the above testing this material meets the weld impact requirement of the above specification.

Lehigh Testing Laboratories, Inc.

Kenneth M. Petito

Kenneth M. Petito, Supvr. Mechanical Testing

This certificate of report shall not be reproduced, except in full, without written approval of Lehigh Testing Laboratories, Inc. Testing relates only to item(s) tested. The recording of false, fictitious or fraudulent statements or entries in this document may be punishable as a felony under Federal Statutes. Form 500

NUCOR
PLATE MILL

P.O.Box 279
Winton, NC 27986
(252) 358-3700

Mill Test Report

Page 6

NUCOR
It's our Nature.

Issuing Date : 06/12/2010 B/L No. : 272275 Load No. : 275961 Our Order No. : 84307712 Cust. Order No. : 43484

Vehicle No: NOKL 728011

Specification : 0.3750" x 96.000" x 450.000"

ASTM A588-A-05/A588-B-05/A709-09a 50W-04 345 50W-09/AASHTO M270 50W

Sold To :

Ship To :

Marking :

Heat No	C	Mn	P	S	Si	Cu	Ni	Cr	Mo	Al(tot)	V	Nb	Ti	N	Ca	B	Sn	CEQ	PCM
0506955	0.17	1.04	0.011	0.001	0.34	0.29	0.21	0.47	0.02	0.032	0.027	0.002					0.011	0.48	0.28
0506343	0.18 ✓	1.04 ✓	0.014	0.001	0.34 ✓	0.30	0.22	0.48	0.02	0.028	0.029	0.002	0.003		0.0031	0.0004	0.013	0.48	0.28

Tensile Test

Plate Serial No	Pieces	Tons	Dir.	(ksi) Yield	(ksi) Tensile	Elongation % in 2"	Elongation % in 8"
0506955-02	1	2.45	T	60,200	83,800		20.5
			T	62,600	82,600		17.9
0506343-02	2	4.90	T	55,600	81,500		20.0
			T	63,200	85,700		20.1

Charpy Impacts

Dir.	(ft-lbs) 1	(%) shear	(ft-lbs) 2	(%) shear	(ft-lbs) 3	(%) shear	(ft-lbs) Ave.	(%) shear	Size	Temp (°F)	Min Ave.
H-L	68.0		62.6		76.9		68.5		10mm	0	25
H-L	28.1		26.0		59.7		37.9		10mm	0	25
H-L	30.0		31.1		31.2		30.8		10mm	0	25
H-L	28.6		24.3		32.1		27.6		10mm	-22	25

$$CE = 0.16 + \frac{(1.04 + 0.34)}{6} + \frac{(0.48 + 0.02 + 0.029)}{5} + \frac{(0.22 + 0.30)}{15}$$

$$= 0.53 \geq 0.45$$

Manufactured to fully killed fine grain practice by Electric Arc Furnace. Welding or weld repair was not performed on this material. Mercury has not been used in the direct manufacturing of this material. Produced as continuous cast electric plate re-rolled, unless otherwise noted in Specification.

Yield by 0.5% E.U. method unless otherwise specified. Ceq=C+(Mn/6)+((Cr+Mo+V)/5)+((Cu+Ni)/15)

Pcm=C+(Si/30)+(Mn/20)+(Cu/20)+(Ni/60)+(Cr/20)+(Mo/15)+(V/10)+5B

Melted and manufactured in the USA. ISO 9001-2000 certified (9005461) by SRI Quality System Registrar (9005-08). PED 97/23/EC 7/2 Annex I, Para. 4.3 Compliant. DIN 55049 3.1.B/EN 10204 3.1B(2004), DIN EN 10204 3.1(2005) compliant. For ABS grades only, Quality Assurance certificate 05-HMPQA-363

We hereby certify that the contents of this report are accurate and correct. All test results and operations performed by the material manufacturer are in compliance with the applicable specifications, including customer specifications.

T. A. Deprette

T.A. Deprette, Metallurgist

06/14/2010 3:12:00 PM

NUCOR
PLATE MILL

P.O.Box 279
Winton, NC 27986
(252) 358-3700

Mill Test Report

Page 1

NUCOR
It's our Nature.

Issuing Date : 08/02/2010 BL No. : 271630 Load No. : 273238 Our Order No. : 54387/14 Cust. Order No. : 43484
Vehicle No: NOKL 725035
Specification : 0.5000" x 96.000" x 480.000"
Sold To :
Ship To :
ASTM A588-A-05/A588-B-05/A709-05a 50W-04 345 50W-05/AASHTO
M270 50W

Marking :

Heat No	C	Mn	P	S	Si	Cu	Ni	Cr	Mo	Al(tot)	V	Nb	Ti	N	Ca	B	Sn	CEQ	PCM
0508180	0.16	1.01	0.017	0.004	0.32	0.31	0.22	0.47	0.02	0.026	0.028	0.002	0.002		0.0020	0.0003	0.014	0.47	0.27

Tensile Test

Plate Serial No	Pieces	Tons	Dir.	(psi) Yield	(psi) Tensile	Elongation % in 2"	Elongation % in 8"
0508180-07	2	6.53	T	58,000	82,000		21.8
			T	59,800	82,800		20.7
0508180-08	3	9.80	T	58,000	82,000		21.8
			T	59,800	82,800		20.7

Charpy Impacts

Dir.	(ft-lbs) 1	(%) shear	(ft-lbs) 2	(%) shear	(ft-lbs) 3	(%) shear	(ft-lbs) Ave.	(%) shear	Size	Temp (°F)	Min Ave.
H-L	98.8		133.3		134.4		122.2		10mm	0	25
H-L	77.3		105.8		99.6		94.2		10mm	0	25
H-L	98.8		133.3		134.4		122.2		10mm	0	25
H-L	77.3		105.8		99.6		94.2		10mm	0	25

$$CE = 0.16 + \frac{(1.01 + 0.32)}{6} + \frac{(0.47 + 0.02 + 0.028)}{5} + \frac{(0.22 + 0.31)}{15}$$

$$= 0.521 \geq 0.45$$

Manufactured to fully killed fine grain practice by Electric Arc Furnace. Welding or weld repair was not performed on this material. Mercury has not been used in the direct manufacturing of this material. Produced as continuous cast discrete plate as-rolled, unless otherwise noted in Specification.
Yield by 0.5%UL method unless otherwise specified. Ceq = C+(Mn/6)+((Cr+Mo+V)/5)+((Cu+Ni)/15)
Pcm = C+(Si/30)+(Mn/20)+(Cu/20)+(Ni/60)+(Cr/20)+(Mo/15)+(V/10)+5B
Melted and manufactured in the USA. ISO 9001-2000 certified (8006661) by SRI Quality System Registrar (9006S5-03). PED 97/23/EC 7/2 Annex 1, Para. 4.3 Compliant. DIN 50049 3.1.B/EN 10204 3.1(2004), DIN EN 10204 3.1(2005) compliant. For ABS grades only, Quality Assurance certificate 06-MSPQA-383

We hereby certify that the contents of this report are accurate and correct. All test results and operations performed by the material manufacturer are in compliance with the applicable specifications, including customer specifications.

T. A. Depreitz

T. A. Depreitz, Metallurgist

08/07/2010 8:52:31 AM

NUCOR
PLATE MILL

P.O.Box 278
Winton, NC 27986
(252) 356-3700

Mill Test Report

Page 6

NUCOR
It's our Nature.

Issuing Date : 08/02/2010
Vehicle No: NOKL 725036
Specification : 1.5000" x 96.000" x 480.000"
ASTM A588-A-06/A588-B-05/A709-09a 50W-04 345 50W-06/AASHTO M270 50W

BL No. : 274530
Load No. : 272238
Our Order No. : 84307/18
Customer Order No. : 43484
Sold To :
Ship To :

Marking :

Heat No	C	Mn	P	S	Si	Cu	Ni	Cr	Mo	Al(tot)	V	Nb	Ti	N	Ca	B	Sn	CEQ	PCM
0506176	0.18	1.02	0.009	0.001	0.32	0.27	0.24	0.49	0.02	0.031	0.030	0.001	0.002		0.0045	0.0002	0.012	0.47	0.26

Tensile Test

Plate Serial No	Pieces	Tens	Dir.	(psi) Yield	(psi) Tensile	Elongation % in 2"	Elongation % in 8"
0506176-03	2	13.06	T	55,600	82,400		17.8
			T	55,400	79,000		19.3

Charpy Impacts

Dir.	(ft-lbs) 1	(%) shear	(ft-lbs) 2	(%) shear	(ft-lbs) 3	(%) shear	(ft-lbs) Ave.	(%) shear	Size	Temp (°F)	Min Ave.
H-L	145.0		213.2		204.4		187.5		10mm	-4	25
H-L	120.4		138.8		126.3		127.8		10mm	0	25

$$CE = C + \frac{(Mn+Si)}{6} + \frac{(Cr+Mo+V)}{5} + \frac{(Ni+Cu)}{15}$$

$$= 0.18 + \frac{(1.2+0.32)}{6} + \frac{(0.49+0.02+0.030)}{5} + \frac{(0.24+0.27)}{15}$$

$$= 0.575 \geq 0.45$$

Manufactured to fully killed fine grain practice by Electric Arc Furnace. Welding or weld repair was not performed on this material. Mercury has not been used in the direct manufacturing of this material. Produced as continuous cast elements plate as-rolled, unless otherwise noted in Specification.
Yield by 0.5% U.E. method unless otherwise specified. Ceq = C+(Mn/6)+(Cr+Mo+V)/5+(Cu+Ni)/15
Pcm = C+(Si/30)+(Mn/20)+(Cu/20)+(Ni/60)+(Cr/20)+(Mo/15)+(V/10)+5B
Melted and manufactured in the USA. ISO 9001:2000 certified (#006161) by SRI Quality System Registrar (#0965-06). PED 97/23/EC 7/2 Annex 1, Para. 4.3 Compliant. DIN 50049 3.1/EN 10204 3.1(2000), DIN EN 10204 3.1(2005) compliant. For ABS grades only, Quality Assurance certificate 09-HMPDA-383

We hereby certify that the contents of this report are accurate and correct. All test results and operations performed by the material manufacturer are in compliance with the applicable specifications, including customer specifications.

T. A. Depaolis, Metallurgist

08/07/10 10:22:31 AM

PACKING LIST

No. 36781

THE A588 & A572 STEEL COMPANY
785 ARCH STREET
CARNEGIE PA 15106

(412)366-1980 PHONE
(412)366-3780 FAX

SOLD TO
CAN AM
P.O. BOX C-285
POINT OF ROCKS, MD 21777

SHIP VIA: PREPAY & ADD
CUST ID: 0083
YOUR P.O.#: 271897

SHIP TO
STRUCTAL BRIDGE
386 RIVER ROAD
CLAREMONT, NH 03743

BUYER: PAT FRANKLIN
(301)874-5141 PHONE
(301)874-2646 FAX

SALES REP: TONY MATOR

TERMS: NET 30 DAYS

SHIP DATE: 10/28/2010
OUR ORDER #: 36781

LINE	PCS	TOTAL QTY	DESCRIPTION	WIDTH	LENGTH	WEIGHT	UNIT PRICE	TOTAL
1	1		96 X 1 PL A709-50W CVN TESTED Tag # PCS Weight Heat # 79695 1 6,534 0506176	96"	240"	6,534		
2	1		96 X 3/8 PL A709-50W CVN TESTED Tag # PCS Weight Heat # 79696 1 2,450 0506343	96"	240"	2,450		
3	1		96 X 1/2 PL A709-50W CVN TESTED Tag # PCS Weight Heat # 79698 1 3,267 0506180	96"	240"	3,267		
4	1		FREIGHT					

TOTAL WT: 12,251 LBS

TOTAL

RECEIVED BY - SIGNATURE | RECEIVED BY - PRINTED NAME | DATE RECEIVED

Copyright 2006 Bayern Software Phoenix, Arizona (623)296-5228 www.bayernsoftware.com

STRUCTAL BRIDGES, a division of Canam Steel Corp.

WELDING PROCEDURE SPECIFICATION

FCM AND NON FCM WELDS

WPS Number: FC-1002A	Issue date:03-07-2013
Project: Jamaica VT., ER-BRF-015-1(23)	STRUCTAL job #.:UPO 1195
Base metal: ASTM A709 GR 36,50,50W, HPS 50W.	
Welding process:Flux Cored Arc Welding	
Filler metal spec. AWS,A5.29 ESAB DualShield 810X-Ni1	
Flux / shielding gas:100% CO_2	
Current and polarity: DCEP	Electrical stickout: 3/4" +/- 1/4"
Welding position: 3F	
Preheat temp..:AWS D1.5 Table 4.3 / 12.3	WPS qualification:AWS D1.5 / section 5
Heat input: 36.8 - 48.21, Kilojoules	Supporting PQR#:FCAW-PQR-50W-50W-3G-WM23

electrode size	welding amps	current volts	travel speed
1/16"	200 - 225	23 - 25	7 - 7.5 I/M

Joint Detail :T joint

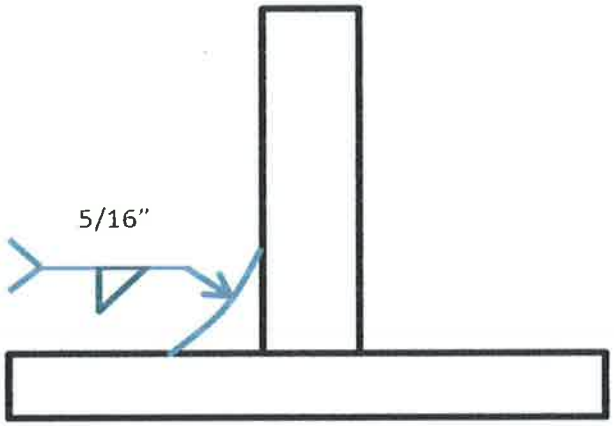

Notes: For welding 5/16" Fillet welds.

Minimum preheat and interpass temperatures per AWS D1.5 Table 4.3 / 12.3

Maximum interpass temp. shall be 450˚F

Thickness of thickest part at point of welding	FCM	Non FCM
up to 3/4"	125˚F	50˚F
3/4" to 1 1/2"	200˚F	70˚F
1 1/2" to 2 1/2"	300˚F	150˚F
over 2 1/2"	350˚F	225˚F

This procedure may vary due to fabrication sequence, fit up, pass size, etc. within the limits provided in the contract documents and the AWS D1.5, 2010 Bridge Welding Code.

PROCEDURE QUALIFICATION RECORD

PQR NUMBER:FCAW-PQR-50W-50W-3G-WM23

Welder's Name Daryl HASTINGS ID Employee# 1185 Welding Test Date 12-16-2011 2010 0.0

Process FCAW Position 3G ESO 3/4" Joint Detail : B-U2a-GF

Electrode(s) Mfg. Designation ESAB DualShield810XNI1 Elect.Class. E81T1 – Ni1C AWS FluxDesig. N/A

Post Weld Heat Treatment :Temp N/A Hold Time N/A Heating/Cooling Rate N/A

	Diameter	Current	WFS*	Voltage	Current & Polarity
Electrode (1)	1/16"	217.5	-----	24.6	DCEP
Electrode (2)					
Electrode (3)					

Calculated Heat Input (see 5.12) 45.9 kJ/in. per 5.13

Shielding Gas CO_2 Dew Point -40C Flow Rate 40-45 CFH Gas Cup Size 3/8"

Travel Speed: Min. 7.3 in/min, average Max. -

Base Metal Specification and Thickness A709 Gr.50W, 1" Heat Number 0506176

Backing Metal Specification and Thickness A709 Gr.50W, 3/8" Heat Number 0506343

Base metal Carbon Equivalent (see 5.4.2) 0.575

(See attached the Certified Mill Test Report for Base and Backing Materials)

Preheat Temp. 225F Interpass Temp. : Min. 225F Max. 400F

SPECIMEN **TEST RESULTS**

AWMT : Tensile Strength 98 ksi Yield Strength 89 ksi Elong.% In 50mm 26 ROA (%) 70

Visual Inspection: x Acceptable Unacceptable **Macro Test: x Acceptable Unacceptable

Side Bends 1. Satisfactory 2. Satisfactory 3. Satisfactory 4. Satisfactory

Reduced Section Tension : Tension Strength 1. 94 ksi Location of Break 1. base / ductile

2. 93 ksi Location of Break 2. base / ductile

Charpy V-Notch Impact (Ft.-Lbs.) (78 , 71 , 74 , 86 , 79)

Toughness of Weld Metal (Ft.-Lbs.) (78 , 74 , 79)

SMAW, SAW, FCAW, GMAW – 5 Req'd. [a]Avg. 77 ft.lbs @ -20° F

ESW and EGW – 8 Req'd.

**Chemistry of Deposited Weld Metal (%) C 0.05 Mn 1.29 Si 0.58 P 0.007 S 0.005

When Required by contract Documents* Ni 0.87 Cr 0.08 Mo <0.01 V 0.03 Cu 0.05

Radiographic Test: x Acceptable Unacceptable Remarks:

Fillet Weld Soundness Maximum Size Single Pass : 5/16" 1. Acceptable 2. Acceptable 3. Acceptable

Macroetch Minimum Size Multiple pass: 3/8" 1. Acceptable 2. Acceptable 3. Acceptable

We, the undersigned, certify that the above described WPQR/FWS has been qualified in accordance with Clause 5 of the AASHTO / AWS D1.5M/D1.5, (2008) Bridge Welding Code.

Year

State/3rd party Witness D. Lang

Date 12-16-2011

WILLIAM A. CAMPBELL
CWI 94070411
QC1 EXP. 07/01/12

Mfr./Contractor Manufacturer: Structal, div. Canam

Authorized By A.Daigneault

Date Feb. 22, 2011

Agency Results Reviewed Keville Entr.

Date 2/22/11 William A Campbell

A. Daigneault

INGÉNIEUR - ENGINEER Alain Daigneault 104099 QUÉBEC

CWB LEVEL 2 # 5120

*Optional; **Optional for CJP; [a]Discard the highest and lowest values and average the 3 remaining.

Structal Form Rev.0 / 2011-02-12

Lehigh Testing Laboratories, Inc.

A Subsidiary of THE MMR GROUP, INC.

308 WEST BASIN ROAD • P.O. BOX 903 • NEW CASTLE, DE 19720
(302) 328-0500 • FAX (302) 328-0417
www.lehightesting.com

THE MMR GROUP, INC.
an ESOP Company

RADIOGRAPHY TEST REPORT

ATTN:
Project:

STRUCTAL BRIDGES
DIVISION OF CANAM

4011 CLAY STREET
POINT OF ROCKS, MD.
21777

DATE	JANUARY 3, 2011	SOURCE	IR.192
PO NO.	VERBAL	CURIES	33
LTL NO.	K-41-30-2	KILOVOLTS	N/A
PART NO.	DARYL HASTINGS	MILLIAMPS	N/A
SERIAL NO.	WPS#-FCAW-PQR-50W-50W-3G-WM-23	EXPOSURE (MIN)	17:00
MATERIAL & THK	ASTM-A709-GR.50W-C/S 1"	FOCAL DIST (IN)	SOD-13.75" OFD-1.25"
SPEC	AWS D1.5 - 08 (F.C.M.)	PEN SIZE	20
TYPE FILM	FUJI IX 50	SHIM SIZE	N/A
NO. & SIZE	(2) DOUBLE LOADED 4.5 X 17	DENSITY	2.2 - 2.8

EFFECTIVE FOCAL SPOT SIZE 0.153 /EXPOSURE; SINGLE X DOUBLE
VIEWING; SINGLE X DOUBLE

LTL PROCEDURE - QA-NDE-P-002-REV-7

SE[illegible] NO. & OR[illegible]W NO.	ACCEPTED	REJECTED	INCOMPLETE PENETRATION	INCOMPLETE FUSION	UNDERCUT	CRACKS	POROSITY	INCLUSIONS	UNFUSED CHAPLETS	SHRINKAGE	ROOT SUCK UP	OTHER	REMARKS
			TYPES OF DEFECTS EXHIBITED										
FCAW-PQR													
50W-50W-WM-23													CONTRACT# 2010CB004
VERT. - 3G													
1 - 2	√						1					1	FILM ARTIFACT
2 - 3	√						1					1	FILM ARTIFACT

DEFECT SEVERITY CODE
(1) PRESENT BUT ACCEPTABLE
(3) UNACCEPTABLE

QUANTITY INSPECTED	1
NUMBER ACCEPTED	1
NUMBER REJECTED	0

Lehigh Testing Laboratories, Inc.

David C. Staats

DAVID C. STAATS Level II, RT

This certificate of report shall not be reproduced, except in full, without written approval of Lehigh Laboratories, Inc. Testing relates only to item(s)tested. The recording of false or fraudulent statements or entries in this document may be punishable as a felony under Federal Statutes.

Form 500

Lehigh Testing Laboratories, Inc.
A Subsidiary of THE MMR GROUP, INC.
308 WEST BASIN ROAD • P.O. BOX 903 • NEW CASTLE, DE 19720
(302) 328-0500 • FAX (302) 328-0417

THE MMR GROUP, INC.
an ESOP Company

TEST REPORT

STRUCTAL BRIDGES – DIVISION OF CANAM
ATTENTION: ALAIN DAIGNEAULT
386 RIVER ROAD
CLAREMONT, NH 03743

DATE: January 6, 2011
P.O. NO: VERBAL
LEHIGH NO: **K-41-30 Sample 2**
PAGE: 1 of 1

MATERIAL: ASTM A709 GR 50W Plate (Filler Metal Classification AWS A5.29, E81T1-Ni1C)
SPECIFICATION: SECTION II, PART C 2010, SFA-AWS A5.29, FCM Procedure Qualification
SAMPLE DESIGNATION: (1) SAMPLE PLATE: **1" THICK, FCAW,**
PQR NO. FCAW-PQR-50W-50W-3G-WM-23,
POSITION: 3G
WELDER: DARYL HASTINGS

CHEMICAL ANALYSIS (%)
WELD METAL

Carbon	0.05
Sulfur	0.005
Manganese	1.29
Silicon	0.58
Phosphorus	0.007
Chromium	0.08
Nickel	0.87
Molybdenum	<0.01
Aluminum	<0.01
Vanadium	0.03
Titanium	0.06
Copper	0.05
Niobium (Cb)	0.02

Based on the above analysis this material **meets** the chemical requirements of Section II, Part C 2010, SFA-AWS A5.29, FCM Procedure Qualification.

LTL Procedure: QA-CH-P-048 Rev 1 (Leco C&S)
QA-CH-P-124 Rev 1 (ICP)

Lehigh Testing Laboratories, Inc.

Peter M. Engelgau

Peter M. Engelgau, Principal Chemist

This certificate of report shall not be reproduced, except in full, without written approval of Lehigh Testing Laboratories, Inc. Testing relates only to item(s) tested. The recording of false, fictitious or fraudulent statements or entries in this document may be punishable as a felony under Federal Statutes. Form 500

Lehigh Testing Laboratories, Inc.
A Subsidiary of THE MMR GROUP, INC.
308 WEST BASIN ROAD • P.O. BOX 903 • NEW CASTLE, DE 19720
(302) 328-0500 • FAX (302) 328-0417

THE MMR GROUP, INC.
an ESOP Company

TEST REPORT

STRUCTAL BRIDGES – DIVISION OF CANAM
ATTENTION: ALAIN DAIGNEAULT
386 RIVER ROAD
CLAREMONT, NH 03743

DATE: January 6, 2011
P.O. NO: VERBAL
LEHIGH NO: K-41-30 Sample 2
PAGE: 1 of 2

MATERIAL: ASTM A709 GR 50W Plate (Filler Metal Classification AWS A5.29, E81T1-Ni1C)
SPECIFICATION: AWS D1.5-08 (FIG 5.1), FCM Procedure Qualification
SAMPLE DESIGNATION: (1) SAMPLE PLATE: **1" THICK, FCAW,**
PQR NO. FCAW-PQR-50W-50W-3G-WM-23,
POSITION: 3G
WELDER: DARYL HASTINGS

MECHANICAL PROPERTIES (Per ASTM A370-09a$^{\epsilon 1}$)

	Reduced Section Tensiles (Per Para 5.18.1)		All Weld Metal Tensile (Per Para 5.18.4/ ASTM A370-09a$^{\epsilon 1}$)
	2-A	2-B	2-1
Width (inches)	1.026	1.030	----
Thickness (inches)	0.946	0.934	----
Diameter (inches)	----	----	0.500
Area (square inches)	0.9706	0.9620	0.1963
Yield Strength (ksi) 0.2% Offset	----	----	89
Tensile Strength (ksi)	94	93	98
Elongation (%) in 1"	26	30	(2") 26
Reduction of Area (%)	41	37	70
Ultimate Load (lbs.)	91,090	89,800	19,176
Location & Character of Failure	Base/Ductile	Base/Ductile	----

MACROS (Per Para 5.18.2)
2A. SATISFACTORY
2B. SATISFACTORY
2C. SATISFACTORY

SIDE BEND TESTS (Per Para 5.18.3)
2A. SATISFACTORY
2B. SATISFACTORY
2C. SATISFACTORY
2D. SATISFACTORY

Based on the above testing this material **meets** the tensile, bend and macro requirements of the above specification.

Lehigh Testing Laboratories, Inc.

L. Ron Hughey
L. Ron Hughey, Metallography Manager

Kenneth M. Petito
Kenneth M. Petito, Supvr., Mechanical Testing

This certificate of report shall not be reproduced, except in full, without written approval of Lehigh Testing Laboratories, Inc. Testing relates only to item(s) tested.
The recording of false, fictitious or fraudulent statements or entries in this document may be punishable as a felony under Federal Statutes. Form 500

Lehigh Testing Laboratories, Inc.
A Subsidiary of THE MMR GROUP, INC.
308 WEST BASIN ROAD • P.O. BOX 903 • NEW CASTLE, DE 19720
(302) 328-0500 • FAX (302) 328-0417

THE MMR GROUP, INC.
an ESOP Company

TEST REPORT

STRUCTAL BRIDGES – DIVISION OF CANAM
ATTENTION: ALAIN DAIGNEAULT
386 RIVER ROAD
CLAREMONT, NH 03743

DATE: January 6, 2011
P.O. NO: VERBAL
LEHIGH NO: K-41-30 Sample 2
PAGE: 2 of 2

MATERIAL: ASTM A709 GR 50W Plate (Filler Metal Classification AWS A5.29, E81T1-Ni1C)
SPECIFICATION: AWS D1.5-08 (FIG 5.1), FCM Procedure Qualification
SAMPLE DESIGNATION: (1) SAMPLE PLATE: **1" THICK, FCAW, PQR NO. FCAW-PQR-50W-50W-3G-WM-23, POSITION: 3G WELDER: DARYL HASTINGS**

WELD IMPACT PROPERTIES (Per Para 5.18.5/ASTM A370-09a$^{\epsilon 1}$)

Lehigh No.	Customer ID	Test Temp.	Impact Energy (Ft.-Lbs.)	Lateral Expansion (Mils)	Shear (%)
K-41-30-2	PQR #FCAW-PQR-50W-50W-3G-WM-23	-20° F	78	62	50
		-20° F	71 ✓	57	50
		-20° F	74	58	50
		-20° F	86 ✓	66	50
		-20° F	79	64	50
		AVG*	**77**	**61**	**50**

Specimen Size: 10mm x 10mm

*Average per paragraph 5.19.5.1.

Based on the above testing this material meets the impact requirement of the above specification.

Lehigh Testing Laboratories, Inc.

Kenneth M. Petito
Kenneth M. Petito
Kenneth M. Petito, Supvr., Mechanical Testing

This certificate of report shall not be reproduced, except in full, without written approval of Lehigh Testing Laboratories, Inc. Testing relates only to item(s) tested. The recording of false, fictitious or fraudulent statements or entries in this document may be punishable as a felony under Federal Statutes. Form 500

Lehigh Testing Laboratories, Inc.
A Subsidiary of THE MMR GROUP, INC.
308 WEST BASIN ROAD • P.O. BOX 903 • NEW CASTLE, DE 19720
(302) 328-0500 • FAX (302) 328-0417

THE MMR GROUP, INC.
an ESOP Company

TEST REPORT

STRUCTAL BRIDGES – DIVISION OF CANAM
ATTENTION: ALAIN DAIGNEAULT
386 RIVER ROAD
CLAREMONT, NH 03743

DATE: December 30, 2010

P.O. NO: VERBAL
LEHIGH NO: K-41-21
Sample 2
PAGE: 1 of 1

MATERIAL: ASTM A709 GR 50W, FILLER METAL AWS A5.29, E81T1-Ni1C
SPECIFICATION: New York State SCM 3rd Edition (Fig. 804d) Fillet Weld Soundness Qualification
SAMPLE DESIGNATION: (1) SAMPLE: WPS #FCAW-PQR-50W-50W-3F-WM-23, POSITION 3F – 5/16" SINGLE PASS WITH 3/8" MULTI PASS,
WELDER: DARYL HASTINGS, ID 1185
CONTRACT #: 2010CB004

MACROS (Per Para. 804 (g)/ Para. 806 (h))

(Sample #2, Single Pass)

	A	B	C
Weld Fusion:	Acceptable	Acceptable	Acceptable
Weld Bead Size:	Acceptable	Acceptable	Acceptable
Layer Depth: (Depth of Penetration)	Acceptable	Acceptable	Acceptable

(Sample #2, Multi Pass)

	A	B	C
Weld Fusion:	Acceptable	Acceptable	Acceptable
Weld Bead Size:	Acceptable	Acceptable	Acceptable
Layer Depth: (Depth of Penetration)	Acceptable	Acceptable	Acceptable

Based on the above testing this material meets the macro requirement of New York State SCM 3rd Edition, (Fig. 804d) Fillet Weld Soundness Qualification.

Lehigh Testing Laboratories, Inc.

Ron Hughey

L. Ron Hughey, Metallography Manager

This certificate of report shall not be reproduced, except in full, without written approval of Lehigh Testing Laboratories, Inc. Testing relates only to item(s) tested. The recording of false, fictitious or fraudulent statements or entries in this document may be punishable as a felony under Federal Statutes. Form 500

Lehigh Testing Laboratories, Inc.
A Subsidiary of THE MMR GROUP, INC.
308 WEST BASIN ROAD • P.O. BOX 903 • NEW CASTLE, DE 19720
(302) 328-0500 • FAX (302) 328-0417

THE MMR GROUP, INC.
an ESOP Company

TEST REPORT

STRUCTAL BRIDGES – DIVISION OF CANAM
ATTENTION: ALAIN DAIGNEAULT
386 RIVER ROAD
CLAREMONT, NH 03743

DATE: December 30, 2010

P.O. NO: VERBAL
LEHIGH NO: **K-41-21**
Sample 2
PAGE: 1 of 1

MATERIAL: ASTM A709 GR 50W, FILLER METAL AWS A5.29, E81T1-Ni1C
SPECIFICATION: AWS D1.5-08 FCM, Figure 5.8 & Para. 5.19.3 Fillet Weld Soundness Qualification
SAMPLE DESIGNATION: (1) SAMPLE: WPS #FCAW-PQR-50W-50W-3F-WM-23,
POSITION 3F – 5/16" SINGLE PASS WITH 3/8"
MULTI PASS,
WELDER: DARYL HASTINGS, ID 1185
CONTRACT #: 2010CB004

MACROS (Per Para. 5.18.2)
(Sample #2, Single Pass)
A: Acceptable
B: Acceptable
C: Acceptable

(Sample #2, Multi Pass)
A: Acceptable
B: Acceptable
C: Acceptable

Based on the above testing this material meets the macro requirement of AWS D1.5-08 FCM, Figure 5.8 & Para. 5.19.3 Fillet Weld Soundness Qualification.

Lehigh Testing Laboratories, Inc.

L. Ron Hughey

L. Ron Hughey, Metallography Manager

This certificate of report shall not be reproduced, except in full, without written approval of Lehigh Testing Laboratories, Inc. Testing relates only to item(s) tested. The recording of false, fictitious or fraudulent statements or entries in this document may be punishable as a felony under Federal Statutes. Form 500

NUCOR
PLATE MILL

P.O.Box 279
Winton, NC 27986
(252) 358-3700

Mill Test Report

Page 6

NUCOR
It's our Nature.

Issuing Date : 08/12/2010 B/L No.: 272275 Load No.: 275861 Our Order No.: 84307112 Cust. Order No.: 43484

Vehicle No: NOKL 726011

Specification : 0.3750" x 96.000" x 450.000"

ASTM A588-A-05/A588-B-05/A709-09a 50W-04 345 50W-08/AASHTO M270 50W

Sold To :

Ship To :

Marking :

Heat No	C	Mn	P	S	Si	Cu	Ni	Cr	Mo	Al(tot)	V	Nb	Ti	N	Ca	B	Sn	CEQ	PCM
0506955	0.17	1.04	0.011	0.001	0.34	0.28	0.21	0.47	0.02	0.032	0.027	0.002					0.011	0.48	0.28
0506343	0.16 ✓	1.04 ✓	0.014	0.001	0.34 ✓	0.30	0.22	0.48	0.02	0.028	0.029	0.002	0.003		0.0031	0.0004	0.013	0.48	0.28

Tensile Test

Plate Serial No	Pieces	Tons	Dir.	(ksi) Yield	(ksi) Tensile	Elongation % in 2"	Elongation % in 8"
0506955-02	1	2.45	T	60,200	83,800		20.5
			T	62,600	82,800		17.9
0506343-02	2	4.90	T	55,600	81,600		20.0
			T	63,200	85,700		20.1

Charpy Impacts

Dir.	(ft-lbs) 1	(%) shear	(ft-lbs) 2	(%) shear	(ft-lbs) 3	(%) shear	(ft-lbs) Ave.	(%) shear	Size	Temp (°F)	Min Ave.
H-L	88.0		62.6		76.9		65.5		10mm	0	25
H-L	29.1		26.0		50.7		37.9		10mm	0	25
H-L	30.0		31.1		31.2		30.8		10mm	0	25
H-L	26.5		24.3		32.1		27.8		10mm	-22	25

$$CE = 0.16 + \frac{(1.04 + 0.34)}{6} + \frac{(0.48 + 0.02 + 0.029)}{5} + \frac{(0.22 + 0.30)}{15}$$

$$= 0.53 \geq 0.45$$

Manufactured to fully killed fine grain practice by Electric Arc Furnace. Welding or weld repair was not performed on this material. Mercury has not been used in the direct manufacturing of this material. Produced as continuous cast electric plate re-rolled, unless otherwise noted in Specification.

Yield by 0.5% U.E. method unless otherwise specified. Ceq=C+(Mn/6)+((Cr+Mo+V)/5)+((Cu+Ni)/15)

Pcm=C+(Si/30)+(Mn/20)+(Cu/20)+(Ni/60)+(Cr/20)+(Mo/15)+(V/10)+5B

Melted and manufactured in the USA. ISO 9001-2000 certified (9005461) by SRI Quality System Registrar (9005-00). PED 97/23/EC 7/2 Annex 1, Para. 4.3 Compliant. DIN 50049 3.1/EN 10204 3.1B(2004), DIN EN 10204 3.1(2005) compliant. For ABS grades only, Quality Assurance certificate 08-HMPQA-353

We hereby certify that the contents of this report are accurate and correct. All test results and operations performed by the material manufacturer are in compliance with the applicable specifications, including customer specifications.

T.A. Deprelle, Metallurgist

08/16/2010 3:13:50 PM

NUCOR
PLATE MILL

P.O.Box 279
Winton, NC 27986
(252) 358-3700

Mill Test Report

Page 3

NUCOR
It's our Nature.

Issuing Date : 08/02/2010
Vehicle No: NOKL 725035
B/L No. : 271830
Load No. : 273238
Our Order No. : 94387/14
Cust. Order No. : 45464
Specification : 0.5000" x 96.000" x 480.000"
ASTM A588-A-05/A588-B-05/A709-09a 50W-04 345 50W-05/AASHTO M270 50W

Sold To :

Ship To :

Marking :

Heat No	C	Mn	P	S	Si	Cu	Ni	Cr	Mo	Al(tot)	V	Nb	Ti	N	Ca	B	Sn	CEQ	PCM
0508180	0.16	1.01	0.017	0.004	0.32	0.31	0.22	0.47	0.02	0.026	0.028	0.002	0.002		0.0020	0.0003	0.014	0.47	0.27

Tensile Test

Plate Serial No	Pieces	Tons	Dir.	(psi) Yield	(psi) Tensile	Elongation % in 2"	Elongation % in 8"
0508180-07	2	8.53	T	56,000	82,000		21.8
			T	59,800	82,800		20.7
0508180-08	3	9.60	T	56,000	82,000		21.8
			T	59,800	82,800		20.7

Charpy Impacts

Dir.	(ft-lbs) 1	(%) shear	(ft-lbs) 2	(%) shear	(ft-lbs) 3	(%) shear	(ft-lbs) Ave.	(%) shear	Size	Temp (°F)	Min Ave.
H-L	98.8		133.3		134.4		122.2		10mm	0	25
H-L	77.3		105.8		99.6		94.2		10mm	0	25
H-L	98.8		133.3		134.4		122.2		10mm	0	25
H-L	77.3		105.8		99.6		94.2		10mm	0	25

$$CE = 0.16 + \frac{(1.01 + 0.32)}{6} + \frac{(0.47 + 0.02 + 0.028)}{5} + \frac{(0.22 + 0.31)}{15}$$

$$= 0.521 \geq 0.45$$

Manufactured to fully killed fine grain practice by Electric Arc Furnace. Welding or weld repair was not performed on this material. Mercury has not been used in the direct manufacturing of this material. Produced as continuous cast discrete plate as-rolled, unless otherwise noted in specification.
Yield by 0.5EUL method unless otherwise specified. Ceq = C+(Mn/6)+((Cr+Mo+V)/5)+((Cu+Ni)/15)
Form = C+(Si/30)+(Mn/20)+(Cu/20)+(Ni/60)+(Cr/20)+(Mo/15)+(V/10)+5B
Melted and manufactured in the USA. ISO 9001-2000 certified (R06461) by SRI Quality System Registrar (R0155-09). PED 97/23/EC 7/2 Annex 1, Para. 4.3 Compliant. DIN 50049 3.1, BEN 10204 3.1B(2004), DIN EN 10204 3.1(2005) compliant. For ABS grades only, Quality Assurance certificate 06-MMPQA-393

We hereby certify that the contents of this report are accurate and correct. All test results and operations performed by the material manufacturer are in compliance with the applicable specifications, including customer specifications.

T. A. Depietro

T. A. Depietro, Metallurgist

08/07/2010 9:52:31 AM

NUCOR
PLATE MILL

P.O.Box 278
Winton, NC 27986
(252) 356-3700

Mill Test Report

NUCOR
It's our Nature.

Issuing Date : 09/02/2010
Vehicle No: NOKL 725015
B/L No. : 271530
Load No. : 273238
Our Order No. : 84387/16
Specification : 1.0000" x 96.000" x 480.000"
ASTM A588-A-06/A588-B-05/A709-09a 50W-04 345 50W-05/AASHTO M270 50W
Sold To :
Cust. Order No. : 43484
Ship To :

Marking :

Heat No	C	Mn	P	S	Si	Cu	Ni	Cr	Mo	Al(tot)	V	Nb	Ti	N	Ca	B	Sn	CEQ	PCM
0506176	0.18	1.02	0.009	0.001	0.32	0.27	0.24	0.49	0.02	0.031	0.030	0.001	0.002		0.0045	0.0002	0.012	0.47	0.25

Tensile Test

Plate Serial No	Pieces	Tens	Dir.	(ps) Yield	(ps) Tensile	Elongation % in 2"	Elongation % in 8"
0506176-03	2	13.06	T	55,600	82,400		17.8
			T	55,400	79,000		19.3

Charpy Impacts

Dir.	(ft-lbs) 1	(%) shear	(ft-lbs) 2	(%) shear	(ft-lbs) 3	(%) shear	(ft-lbs) Ave.	(%) shear	Size	Temp (°F)	Min Ave.
H-L	145.9		213.2		204.4		187.5		10mm	-4	25
H-L	120.4		138.6		126.3		127.8		10mm	0	25

$$CE = C + \frac{(Mn+Si)}{6} + \frac{(Cr+Mo+V)}{5} + \frac{(Ni+Cu)}{15}$$

$$= 0.18 + \frac{(1.2+0.32)}{6} + \frac{(0.49+0.02+0.030)}{5} + \frac{(0.24+0.27)}{15}$$

$$= 0.575 \geq 0.45$$

Manufactured to fully killed fine grain practice by Electric Arc Furnace. Welding or weld repair was not performed on this material. Mercury has not been used in the direct manufacturing of this material. Produced as continuous cast decarb plate as-rolled, unless otherwise noted in Specification.
Yield by 0.5EL2, tested unless otherwise specified. Ceq = C+(Si/24)+(Mn/6)+(Cu/20)+(Ni/40)+(Cr/10)+(Mo/7)+(V/2)+(Cu+Ni/15)
Pcm = C+(Si/30)+(Mn/20)+(Cu/20)+(Ni/60)+(Cr/20)+(Mo/15)+(V/10)+5B
Melted and manufactured in the USA. ISO 9001:2000 certified (#006461) by SRI Quality System Registrar (WD95-09). PED 97/23/EC 7/2 Annex 1, Para. 4.3 Compliant. DIN 50049 3.1/EN 10204 3.1B(2004), DIN EN 10204 3.1(2005) compliant. For AISI grades only, Quality Assurance certificate 06-UMPQA-353

We hereby certify that the contents of this report are accurate and correct. All test results and operations performed by the material manufacturer are in compliance with the applicable specifications, including customer specifications.

T. A. Depaola, Metallurgist

09/07/2010 9:52:31 AM

PACKING LIST

No. 36781

THE A588 & A572 STEEL COMPANY
785 ARCH STREET
CARNEGIE PA 15106

(412)366-1980 PHONE
(412)366-3780 FAX

SHIP VIA: PREPAY & ADD
CUST ID: 0083
YOUR P.O.#: 271897

BUYER: PAT FRANKLIN
(301)874-5141 PHONE
(301)874-2646 FAX

SALES REP: TONY MATOR

SHIP DATE: 10/28/2010
OUR ORDER #: 36781

SOLD TO:
CAN AM
P.O. BOX C-285
POINT OF ROCKS, MD 21777

SHIP TO:
STRUCTAL BRIDGE
386 RIVER ROAD
CLAREMONT, NH 03743

TERMS: NET 30 DAYS

LINE	PCS	TOTAL QTY	DESCRIPTION	WIDTH	LENGTH	WEIGHT	UNIT PRICE	TOTAL
1	1		96 X 1 PL A709-50W CVN TESTED Tag # PCS Weight Heat # 79695 1 6,534 0506176	96"	240"	6,534		
2	1		96 X 3/8 PL A709-50W CVN TESTED Tag # PCS Weight Heat # 79696 1 2,450 0506343	96"	240"	2,450		
3	1		96 X 1/2 PL A709-50W CVN TESTED Tag # PCS Weight Heat # 79698 1 3,267 0506180	96"	240"	3,267		
4	1		FREIGHT					

TOTAL WT: 12,251 LBS

TOTAL

RECEIVED BY - SIGNATURE	RECEIVED BY - PRINTED NAME	DATE RECEIVED

Copyright 2006 Bayern Software Phoenix, Arizona (623)298-5228 www.bayernsoftware.com

STRUCTAL BRIDGES, a division of Canam Steel Corp.

WELDING PROCEDURE SPECIFICATION

FCM AND NON FCM WELDS

WPS Number: FC-1003A	Issue date:03-07-2013
Project: Jamaica VT., ER-BRF-015-1(23)	STRUCTAL job #.: UPO 1195
Base metal: ASTM A709 GR 36,50,50W, HPS 50W.	
Welding process:Flux Cored Arc Welding	
Filler metal spec. AWS,A5.29 ESAB DualShield 810X-Ni1	
Flux / shielding gas:100% CO_2	
Current and polarity: DCEP	Electrical stickout: 3/4" +/- 1/4"
Welding position: 4F	
Preheat temp..:AWS D1.5 Table 4.3 / 12.3	WPS qualification:AWS D1.5 / section 5
Heat input: 28.86-48.02, Kilojoules	Supporting PQR#:FCAW-PQR-50W-50W-4G-WM23.

electrode size	welding amps	current volts	travel speed
1/16"	240.5 - 260	24.5 - 27	10.5-12.25 I/M

Joint Detail :T joint

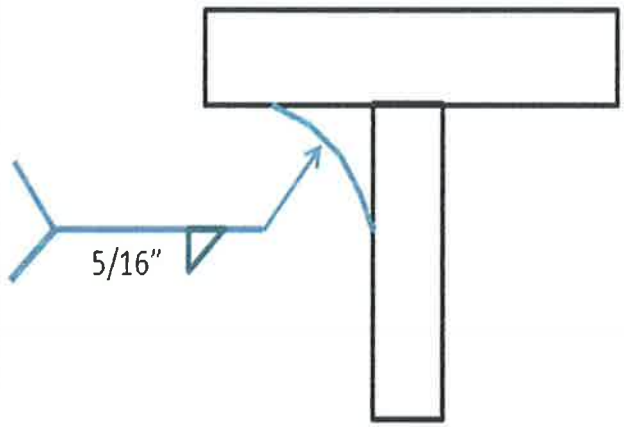

Notes: For welding 5/16" Fillet welds.

Minimum preheat and interpass temperatures per AWS D1.5 Table 4.3 / 12.3

Maximum interpass temp. shall be 450°F

Thickness of thickest part at point of welding	FCM	Non FCM
up to 3/4"	125°F	50°F
3/4" to 1 1/2"	200°F	70°F
1 1/2" to 2 1/2"	300°F	150°F
over 2 1/2"	350°F	225°F

This procedure may vary due to fabrication sequence, fit up, pass size, etc. within the limits provided in the contract documents and the AWS D1.5, 2010 Bridge Welding Code.

PROCEDURE QUALIFICATION RECORD

PQR NUMBER:FCAW-PQR-50W-50W-4G-WM23

Welder's Name Daryl HASTINGS ID Employee# 1185 Welding Test Date 12-21-2011 2010 A.D.

Process FCAW Position 4G ESO 3/4" Joint Detail : B-U2a-GF

Electrode(s) Mfg. Designation ESAB DualShield810XNi1 Elect.Class. E81T1 – Ni1C AWS FluxDesig. N/A

Post Weld Heat Treatment :Temp N/A Hold Time N/A Heating/Cooling Rate N/A

	Diameter	Current	WFS*	Voltage	Current & Polarity
Electrode (1)	1/16"	266.8	-----	26.0	DCEP
Electrode (2)					
Electrode (3)					

Calculated Heat Input (see 5.12) 36.8 kJ/in. per 5.13

Shielding Gas CO_2 Dew Point -40C Flow Rate 40-45 CFH Gas Cup Size 3/8"

Travel Speed: Min. 11.3 in/min, average Max. -

Base Metal Specification and Thickness A709 Gr.50W, 1" Heat Number 0506176

Backing Metal Specification and Thickness A709 Gr.50W, 3/8" Heat Number 0506343

Base metal Carbon Equivalent (see 5.4.2) 0.575

(See attached the Certified Mill Test Report for Base and Backing Materials)

Preheat Temp. 225F Interpass Temp. : Min. 225F Max. 400F

SPECIMEN **TEST RESULTS**

AWMT : Tensile Strength 104 ksi Yield Strength 98 ksi Elong.% In 50mm 22 ROA (%) 52

Visual Inspection: x Acceptable Unacceptable **Macro Test: x Acceptable Unacceptable

Side Bends 1. Satisfactory 2. Satisfactory 3. Satisfactory 4. Satisfactory

Reduced Section Tension : Tension Strength 1. 97 ksi Location of Break 1. base / ductile

2. 100 ksi Location of Break 2. base / ductile

Charpy V-Notch Impact (Ft.-Lbs.) (82 , 84 , 79 , 68 , 68)

Toughness of Weld Metal (Ft.-Lbs.) (82 , 79 , 68)

SMAW, SAW, FCAW, GMAW – 5 Req'd. [a]Avg. 76 ft.lbs @ -20° F

ESW and EGW – 8 Req'd.

**Chemistry of Deposited Weld Metal (%) C 0.06 Mn 1.36 Si 0.65 P 0.008 S 0.005

When Required by contract Documents* Ni 0.90 Cr 0.07 Mo <0.01 V 0.04 Cu 0.05

Radiographic Test: x Acceptable Unacceptable Remarks:

Fillet Weld Soundness Maximum Size Single Pass : 5/16" 1. Acceptable 2. Acceptable 3. Acceptable

Macroetch Minimum Size Multiple pass: 3/8" 1. Acceptable 2. Acceptable 3. Acceptable

We, the undersigned, certify that the above described WPQR/FWS has been qualified in accordance with Clause 5 of the AASHTO / AWS D1.5M/D1.5, (2008) Bridge Welding Code.

Year

State/3rd party Witness D. Lang

Date 12-21-2011

Mfr./Contractor Manufacturer: Structal, div. Canam

Authorized By A.Daigneault

Date Feb. 22, 2011

Agency Results Reviewed Keville Entr.

Date 2/22/11 William Langevelle

A. Daigneault

CWB Level 2 # 5120

*Optional; **Optional for CJP; [a]Discard the highest and lowest values and average the 3 remaining.

Structal Form Rev.0 / 2011-02-12

Lehigh Testing Laboratories, Inc.
A Subsidiary of THE MMR GROUP, INC.
308 WEST BASIN ROAD • P.O. BOX 903 • NEW CASTLE, DE 19720
(302) 328-0500 • FAX (302) 328-0417
www.lehightesting.com

THE MMR GROUP, INC.
an ESOP Company

RADIOGRAPHY TEST REPORT

DATE	JANUARY 12, 2011	SOURCE	IR.192
PO NO.	VERBAL	CURIES	95
LTL NO.	M-43-18-2	KILOVOLTS	N/A
PART NO.	DARYL HASTINGS	MILLIAMPS	N/A
SERIAL NO.	FCAW-PQR-50W-50W-4G-WM-23	EXPOSURE (MIN)	6:00
MATERIAL & THK	ASTM-A709-GR.50W-C/S 1"	FOCAL DIST (IN)	SOD-13.75" OFD-1.25"
SPEC	AWS D1.5 - 08 - (F.C.M.)	PEN SIZE	20
TYPE FILM	FUJI IX 50	SHIM SIZE	N/A
NO. & SIZE	(2) DOUBLE LOADED 4.5 X 17	DENSITY	2.4 - 3.2

ATTN:
Project: STRUCTAL BRIDGES
DIVISION OF CANAM
4011 CLAY STREET
POINT OF ROCKS, MD.
21777

EFFECTIVE FOCAL SPOT SIZE 0.146 /EXPOSURE; SINGLE X DOUBLE
VIEWING; SINGLE X DOUBLE

DEF NO. & OR /√ NO.	ACCEPTED	REJECTED	INCOMPLETE PENETRATION	INCOMPLETE FUSION	UNDERCUT	CRACKS	POROSITY	INCLUSIONS	UNFUSED CHAPLETS	SHRINKAGE	ROOT SUCK UP	OTHER	REMARKS
			TYPES OF DEFECTS EXHIBITED										LTL PROCEDURE - QA-NDE-P-002-REV-7
FCAW-PQR													
50W-50W-WM-23													CONTRACT# 2010CB004
OVERHEAD - 4G													
1 - 2	√						1					1	FILM ARTIFACT
2 - 3	√						1					1	FILM ARTIFACT
													* NOTE*
													PLATE WIDTH WAS 17 INCHES INSTEAD OF 18 INCHES PER SPEC.

DEFECT SEVERITY CODE (1) PRESENT BUT ACCEPTABLE
(3) UNACCEPTABLE

QUANTITY INSPECTED	1
NUMBER ACCEPTED	1
NUMBER REJECTED	0

Lehigh Testing Laboratories, Inc.

David C. Staats

DAVID C. STAATS Level II, RT

This certificate of report shall not be reproduced, except in full, without written approval of Lehigh Laboratories, Inc. Testing relates only to item(s)tested. The recording of false or fraudulent statements or entries in this document may be punishable as a felony under Federal Statutes.

Form 500

Lehigh Testing Laboratories, Inc.
A Subsidiary of THE MMR GROUP, INC
308 WEST BASIN ROAD • P.O. BOX 903 • NEW CASTLE, DE 19720
(302) 328-0500 • FAX (302) 328-0417

THE MMR GROUP, INC.
an ESOP Company

TEST REPORT

UPDATED: 2/15/11*

STRUCTAL BRIDGES – DIVISION OF CANAM
ATTENTION: ALAIN DAIGNEAULT
386 RIVER ROAD
CLAREMONT, NH 03743

DATE: January 14, 2011
P.O. NO: **VERBAL**
LEHIGH NO: **M-43-18**
Sample 2
PAGE: 1 of 1

MATERIAL: ASTM A709 GR 50W Plate (Filler Metal Classification AWS A5.29, E81T1-Ni1C)
SPECIFICATION: SECTION II, PART C 2010, SFA-AWS A5.29, FCM Procedure Qualification
SAMPLE DESIGNATION: (1) SAMPLE PLATE: **1" THICK, FCAW,**
PQR NO. FCAW-PQR-50W-50W-4G-WM-23,
POSITION: 4G
WELDER: DARYL HASTINGS

CHEMICAL ANALYSIS (%)
WELD METAL

Carbon	0.06
Sulfur	0.005
Manganese	1.36
Silicon	0.65
Phosphorus	0.008
Chromium	0.07
Nickel	0.90
Molybdenum	<0.01
Aluminum	0.04
Vanadium	0.03
Copper	0.05

Based on the above analysis this material **meets** the chemical requirements of Section II, Part C 2010, SFA-AWS A5.29, FCM Procedure Qualification.

LTL Procedure: QA-CH-P-048 Rev 1 (Leco C&S)
QA-CH-P-124 Rev 1 (ICP)

*Updated to include Copper result.

Lehigh Testing Laboratories, Inc.

Peter M. Engelgau

Peter M. Engelgau, Principal Chemist

This certificate of report shall not be reproduced, except in full, without written approval of Lehigh Testing Laboratories, Inc. Testing relates only to item(s) tested.
The recording of false, fictitious or fraudulent statements or entries in this document may be punishable as a felony under Federal Statutes. Form 500

Lehigh Testing Laboratories, Inc.
A Subsidiary of THE MMR GROUP, INC
308 WEST BASIN ROAD • P.O. BOX 903 • NEW CASTLE, DE 19720
(302) 328-0500 • FAX (302) 328-0417

THE MMR GROUP, INC.
an ESOP Company

TEST REPORT

STRUCTAL BRIDGES – DIVISION OF CANAM
ATTENTION: ALAIN DAIGNEAULT
386 RIVER ROAD
CLAREMONT, NH 03743

DATE: January 14, 2011
P.O. NO: **VERBAL**
LEHIGH NO: **M-43-18 Sample 2**
PAGE: 1 of 2

MATERIAL: ASTM A709 GR 50W Plate (Filler Metal Classification AWS A5.29, E81T1-Ni1C)
SPECIFICATION: AWS D1.5-08 (FIG 5.1), FCM Procedure Qualification
SAMPLE DESIGNATION: (1) SAMPLE PLATE: **1" THICK, FCAW, PQR NO. FCAW-PQR-50W-50W-4G-WM-23, POSITION: 4G WELDER: DARYL HASTINGS**

MECHANICAL PROPERTIES (Per ASTM A370-09a$^{\epsilon 1}$)

	Reduced Section Tensiles (Per Para 5.18.1)		All Weld Metal Tensile (Per Para 5.18.4/ ASTM A370-09a$^{\epsilon 1}$)
	2-A	2-B	2-1
Width (inches)	1.007	1.008	----
Thickness (inches)	0.866	0.896	----
Diameter (inches)	----	----	0.503
Area (square inches)	0.8721	0.9032	0.1987
Yield Strength (ksi) 0.2% Offset	----	----	98
Tensile Strength (ksi)	97	100	104
Elongation (%) in 1"	41	40	(2") 22
Reduction of Area (%)	41	33	52
Ultimate Load (lbs.)	84,810	90,020	20,672
Location & Character of Failure	Base/Ductile	Base/Ductile	----

MACROS (Per Para 5.18.2)
2A. SATISFACTORY
2B. SATISFACTORY
2C. SATISFACTORY

SIDE BEND TESTS (Per Para 5.18.3)
2A. SATISFACTORY
2B. SATISFACTORY
2C. SATISFACTORY
2D. SATISFACTORY

Based on the above testing this material meets the tensile, bend and macro requirements of the above specification.

Lehigh Testing Laboratories, Inc.

Kyle D. LePore
Kyle D. LePore, Metallography Technician

Kevin M. Sexton
Kevin M. Sexton, Mechanical Testing Technician

This certificate of report shall not be reproduced, except in full, without written approval of Lehigh Testing Laboratories, Inc. Testing relates only to item(s) tested. The recording of false, fictitious or fraudulent statements or entries in this document may be punishable as a felony under Federal Statutes. Form 500

Lehigh Testing Laboratories, Inc.
A Subsidiary of THE MMR GROUP, INC
308 WEST BASIN ROAD • P.O. BOX 903 • NEW CASTLE, DE 19720
(302) 328-0500 • FAX (302) 328-0417

THE MMR GROUP, INC.
an ESOP Company

TEST REPORT

STRUCTAL BRIDGES – DIVISION OF CANAM
ATTENTION: ALAIN DAIGNEAULT
386 RIVER ROAD
CLAREMONT, NH 03743

DATE: January 14, 2011
P.O. NO: VERBAL
LEHIGH NO: M-43-18 Sample 2
PAGE: 2 of 2

MATERIAL: ASTM A709 GR 50W Plate (Filler Metal Classification AWS A5.29, E81T1-Ni1C)
SPECIFICATION: AWS D1.5-08 (FIG 5.1), FCM Procedure Qualification
SAMPLE DESIGNATION: (1) SAMPLE PLATE: **1" THICK, FCAW, PQR NO. FCAW-PQR-50W-50W-4G-WM-23, POSITION: 4G WELDER: DARYL HASTINGS**

WELD IMPACT PROPERTIES (Per Para 5.18.5/ASTM A370-09a$^{\epsilon 1}$)

Lehigh No.	Customer ID	Test Temp.	Impact Energy (Ft.-Lbs.)	Lateral Expansion (Mils)	Shear (%)
M-43-18-2	PQR #FCAW-PQR-50W-50W-4G-WM-23	-20° F	82	52	75
		-20° F	84	56	75
		-20° F	79	50	75
		-20° F	68	44	70
		-20° F	68	47	70
		AVG*	**76**	**50**	**73**

Specimen Size: 10mm x 10mm

*Average per paragraph 5.19.5.1.

Based on the above testing this material meets the impact requirement of the above specification.

Lehigh Testing Laboratories, Inc.

Kevin M. Sexton

Kevin M. Sexton, Mechanical Testing Technician

This certificate of report shall not be reproduced, except in full, without written approval of Lehigh Testing Laboratories, Inc. Testing relates only to item(s) tested. The recording of false, fictitious or fraudulent statements or entries in this document may be punishable as a felony under Federal Statutes. Form 500

STRUCTAL Bridges a division of CANAM GROUP INC.

FILLET WELD PQR WELDING PARAMETERS RECORD

FCAW-PQR-SOW-SOW-

PQR # 4F-WM-23 DATE 12-20-10 WELDER Daryl Hastings

FILLET SIZE	PASS	VOLT	AMP	TRAVEL SPEED (In/Min.)	Wire Feed Speed (In/Min.)
5/16	1	25	265	9.5	
	2				
3/8	1	25	270	8.5	
	2	25	270	12.6	
	5				
	6				

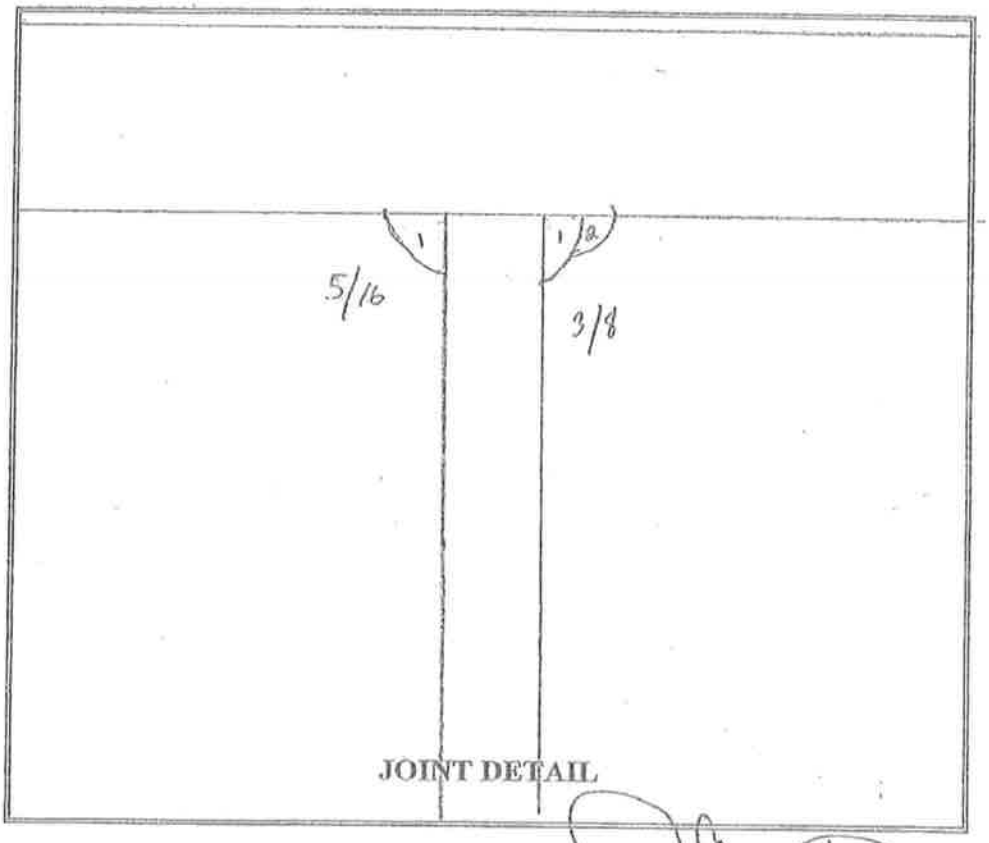

JOINT DETAIL

3rd Party Test Witness

Co. Name KEVILLE ENT RIDOT CWI Signature

David A Lang CWI 95071331 QCI EXP. 7/1/2013

Fabricator's Representative Signature

NUCOR
PLATE MILL

P.O.Box 279
Winton, NC 27986
(252) 358-5700

Mill Test Report

Page 8

NUCOR
It's our Nature.

Issuing Date : 09/12/2010
Vehicle No: NOKL 726011
Bill. No.: 272275
Load No.: 275981
Our Order No.: 94397712
Cust. Order No.: 43484

Specification : 0.3750" x 96.000" x 480.000"
ASTM A588-A-05/A572-B-05/A709-09a 50W-04 345 50W-08/AASHTO M270 50W

Sold-To :

Ship To :

Marking :

Heat No	C	Mn	P	S	Si	Cu	Ni	Cr	Mo	Al(tot)	V	Nb	Ti	N	Ca	B	Sn	CEQ	PCM
0506956	0.17	1.04	0.011	0.001	0.34	0.28	0.21	0.47	0.02	0.032	0.027	0.002					0.011	0.48	0.28
0506343	0.16 ✓	1.04✓	0.014	0.001	0.34 ✓	0.30	0.22	0.48	0.02	0.028	0.029	0.002	0.003		0.0031	0.0004	0.013	0.48	0.28

Tensile Test

Plate Serial No	Pieces	Tons	Dir.	(ksi) Yield	(ksi) Tensile	Elongation % in 2"	Elongation % in 8"
0506956-02	1	2.45	T	60,200	83,800		20.5
			T	62,800	82,600		17.9
0506343-02	2	4.90	T	55,600	81,600		20.0
			T	63,200	85,700		20.1

Charpy Impacts

Dir.	(ft-lbs) 1	(%) shear	(ft-lbs) 2	(%) shear	(ft-lbs) 3	(%) shear	(ft-lbs) Ave.	(%) shear	Size	Temp (°F)	Min Ave.
H-L	68.0		62.6		76.9		68.5		10mm	0	25
H-L	28.1		26.0		50.7		37.9		10mm	0	25
H-L	30.0		31.1		31.2		30.8		10mm	0	25
H-L	26.5		24.3		32.1		27.6		10mm	-22	25

$$CE = 0.16 + \frac{(1.04 + 0.34)}{6} + \frac{(0.48 + 0.02 + 0.029)}{5} + \frac{(0.22 + 0.30)}{15}$$

$$= 0.53 \geq 0.45$$

Manufactured to fully killed fine grain practice by Electric Arc Furnace. Welding or weld repair was not performed on this material. Mercury has not been used in the direct manufacturing of this material. Produced as continuous cast discrete plate re-rolled, unless otherwise noted in Specification.
Yield by 0.5% E. method unless otherwise specified. Ceq=C+(Mn/6)+((Cr+Mo+V)/5)+((Cu+Ni)/15)
Pcm=C+(Si/30)+(Mn/20)+(Cu/20)+(Ni/60)+(Cr/20)+(Mo/15)+(V/10)+5B
Melted and manufactured in the USA. ISO 9001-2000 certified (9005161) by Bitt Quality System Registrar (9005E-00). PED 97/23/EC 7/2 Annex 1, Para. 4.3 Compliant. DIN 50049 3.1/EN 10204 3.1B(2004), DIN EN 10204 3.1(2005) compliant. For ABS grades only, Quality Assurance certificate 09-MUPQA-363

We hereby certify that the contents of this report are accurate and correct. All test results and operations performed by the material manufacturer are in compliance with the applicable specifications, including customer specifications.

T. A. Deprelle

T. A. Deprelle, Metallurgist

09/16/2010 3:12:00 PM

NUCOR
-PLATE MILL

P.O.Box 279
Winton, NC 27986
(252) 358-3700

Mill Test Report

NUCOR
It's our Nature.

Heating Date : 08/02/2010 BL No. : 271630 Load No. : 273238 Our Order No. : 54387/14 Cust. Order No. : 43484
Vehicle No: NOKL 715035
Specification : 0.5000" x 96.000" x 480.000"
Sold To :
Ship To :
ASTM A588-A-05/A588-B-05/A709-09a 50W-04 345 50W-05/AASHTO M270 50W

Marking :

Heat No	C	Mn	P	S	Si	Cu	Ni	Cr	Mo	Al(tot)	V	Nb	Ti	N	Ca	B	Sn	CEQ	PCM
0506180	0.16	1.01	0.017	0.004	0.32	0.31	0.22	0.47	0.02	0.026	0.028	0.002	0.002		0.0020	0.0003	0.014	0.47	0.27

Tensile Test

Plate Serial No	Pieces	Tests	Dir.	(psi) Yield	(psi) Tensile	Elongation % in 2"	Elongation % in 8"
0506180-07	2	8.53	T	58,000	82,000		21.8
			T	59,800	82,800		20.7
0506180-06	3	9.60	T	58,000	82,000		21.8
			T	59,800	82,800		20.7

Charpy Impacts

Dir.	(ft-lbs) 1	(%) shear	(ft-lbs) 2	(%) shear	(ft-lbs) 3	(%) shear	(ft-lbs) Ave.	(%) shear	Size	Temp (°F)	Min Ave.
H-L	98.8		133.3		134.4		122.2		10mm	0	25
H-L	77.3		105.8		99.6		94.2		10mm	0	25
H-L	98.8		133.3		134.4		122.2		10mm	0	25
H-L	77.3		105.8		99.6		94.2		10mm	0	25

$$CE = 0.16 + \frac{(1.01 + 0.32)}{6} + \frac{(0.47 + 0.02 + 0.028)}{5} + \frac{(0.22 + 0.31)}{15}$$

$$= 0.521 \geq 0.45$$

Manufactured to fully killed fine grain practice by Electric Arc Furnace. Welding or weld repair was not performed on this material. Mercury has not been used in the direct manufacturing of this material. Produced as continuous cast discrete plate as-rolled, unless otherwise noted in Specification.
Yield by 0.5EUL method unless otherwise specified. Ceq = C+(Mn/6)+((Cr+Mo+V)/5)+((Cu+Ni)/15)
Pcm = C+(Si/30)+(Mn/20)+(Cu/20)+(Ni/60)+(Cr/20)+(Mo/15)+(V/10)+5B
Melted and manufactured in the USA. ISO 9001-2000 certified (0006661) by SRI Quality System Registrar (#0655-01). PED 97/23/EC 7/2 Annex 1, Para. 4.3 Compliant. DIN 50049 3.1, BREN 10204 3.1(2004), DIN EN 10204 3.1(2005) compliant. For ABS grades only, Quality Assurance certificate 06-MMPQA-383

We hereby certify that the contents of this report are accurate and correct. All test results and operations performed by the material manufacturer are in compliance with the applicable specifications, including customer specifications.

T. A. Depraitis

T.A. Depraitis, Metallurgist

01/01/2010 8:52:31 AM

NUCOR PLATE MILL

P.O.Box 278
Winton, NC 27986
(252) 358-3700

Mill Test Report

Page 5

NUCOR It's our Nature.

Issuing Date : 09/02/2010
Vehicle No: NOKL 725035
Specification : 1.0000" x 96.000" x 480.000"
ASTM A588-A-06/A588-B-05/A709-09a 50W-04 345 50W-05/AASHTO M270 50W

BL No. : 271830

Load No. : 273230

Our Order No. : 94307/10

Sold To :

Cust. Order No. : 43484

Ship To :

Marking :

Heat No	C	Mn	P	S	Si	Cu	Ni	Cr	Mo	Al(sol)	V	Nb	Ti	N	Ca	B	Sn	CEQ	PCM
0506176	0.18	1.02	0.009	0.001	0.32	0.27	0.24	0.49	0.02	0.031	0.030	0.001	0.002		0.0045	0.0002	0.012	0.47	0.26

Tensile Test

Plate Serial No	Piece	Tons	Dir.	(psi) Yield	(psi) Tensile	Elongation % in 2"	Elongation % in 8"
0506176-03	2	13.06	T	55,600	82,400		17.8
			T	55,400	79,000		19.3

Charpy Impacts

Dir.	(ft-lbs) 1	(%) shear	(ft-lbs) 2	(%) shear	(ft-lbs) 3	(%) shear	(ft-lbs) Ave.	(%) shear	Size	Temp (°F)	Min Ave.
H-L	145.9		213.2		204.4		187.5		10mm	-4	25
H-L	120.4		138.8		126.3		127.8		10mm	0	25

$$CE = C + \frac{(Mn+Si)}{6} + \frac{(Cr+Mo+V)}{5} + \frac{(Ni+Cu)}{15}$$

$$= 0.18 + \frac{(1.2+0.32)}{6} + \frac{(0.49+0.02+0.030)}{5} + \frac{(0.24+0.27)}{15}$$

$$= 0.575 \geq 0.45$$

Manufactured to fully killed fine grain practice by Electric Arc Furnace. Welding or weld repair was not performed on this material. Mercury has not been used in the direct manufacturing of this material. Produced as continuous cast discrete plate as-rolled, unless otherwise noted in Specification.
Yield by 0.5% X. method unless otherwise specified. Ceq = C+(Mn/6)+(Cr+Mo+V)/5+(Cu+Ni)/15
Pcm = C+(Si/30)+(Mn/20)+(Cu/20)+(Ni/60)+(Cr/20)+(Mo/15)+(V/10)+5B
Melted and manufactured in the USA. ISO 9001:2000 certified (8106-161) by SRI Quality System Registrar (WD965-09). PED 97/23/EC 7/7 Annex I, Para. 4.3 Compliant. DIN 50049 3.1/BEN 10204 3.1(2005) compliant. For ABS grades only, Quality Assurance certificate 08-HA020A-283

We hereby certify that the contents of this report are accurate and correct. All test results and operations performed by the material manufacturer are in compliance with the applicable specifications, including customer specifications.

T. A. Dupuis, Metallurgist

09/07/2010 9:32:14 AM

PACKING LIST

No. 36781

THE A588 & A572 STEEL COMPANY
785 ARCH STREET
CARNEGIE PA 15106

(412)366-1980 PHONE
(412)366-3780 FAX

SOLD TO
CAN AM
P.O. BOX C-285
POINT OF ROCKS, MD 21777

SHIP VIA: PREPAY & ADD
CUST ID: 0083
YOUR P.O.#: 271897
SHIP TO:
STRUCTAL BRIDGE
386 RIVER ROAD
CLAREMONT, NH 03743

BUYER: PAT FRANKLIN
(301)874-5141 PHONE
(301)874-2646 FAX
SALES REP: TONY MATOR
TERMS: NET 30 DAYS

SHIP DATE: 10/28/2010
OUR ORDER #: 36781

LINE	PCS	TOTAL QTY	DESCRIPTION	WIDTH	LENGTH	WEIGHT	UNIT PRICE	TOTAL
1	1		96 X 1 PL A709-50W CVN TESTED	96"	240"	6,534		
			Tag # PCS Weight Heat #					
			79695 1 6,534 0506176					
2	1		96 X 3/8 PL A709-50W CVN TESTED	96"	240"	2,450		
			Tag # PCS Weight Heat #					
			79696 1 2,450 0506343					
3	1		96 X 1/2 PL A709-50W CVN TESTED	96"	240"	3,267		
			Tag # PCS Weight Heat #					
			79698 1 3,267 0506180					
4	1		FREIGHT					

TOTAL WT: 12,251 LBS

TOTAL

RECEIVED BY - SIGNATURE	RECEIVED BY - PRINTED NAME	DATE RECEIVED

Copyright 2006 Bayern Software Phoenix, Arizona (623)298-5228 www.bayernsoftware.com

STRUCTAL BRIDGES, a division of Canam Steel Corp.

WELDING PROCEDURE SPECIFICATION

FCM AND NON FCM WELDS

WPS Number: SM-100	Issue date:03-07-2013
Project: Jamaica VT., ER-BRF-015-1(23)	STRUCTAL job #.:UPO 1195
Base metal: ASTM A709 GR50W, HPS 50W	
Welding process: Sielded Metal Arc Welding	
Filler metal spec. and Trade Name.:AWS A5.5 Excalibur 8018-C3 MR	
Flux / shielding gas: N/A	
Current and polarity:DCEP	Electrical stickout:N/A
Welding position: 1F- 1G and 2F	
Preheat temp..:AWS D1.5 Table 4.3 / 12.3	WPS qualification:AWS D1.5 - 5.11
Heat input: 38-130 Kilojoules	Supporting PQR#: Pre Approved

electrode size	welding amps	welding volts	travel speed	Joint Detail : 1F-1G and 2F
1/8"	125-150	23-26	3 - 4.5	
5/32"	140-190	23-26	3 - 4.5	
3/16"	180-250	23-26	3 - 4.5	

Notes: 8018 Stick electrodes to be used for weld repairs and tacking
weld repair and tack welding

Minimum preheat and interpass temperatures per AWS D1.5 Table 4.3 / 12.3

Maximum interpass temp. shall be 450°F

Thickness of thickest part at point of welding	FCM	Non FCM
up to 3/4"	125°F	50°F
3/4" to 1 1/2"	200°F	70°F
1 1/2" to 2 1/2"	225°F	150°F
over 2 1/2"	325°F	225°F

This procedure may vary due to fabrication sequence, fit up, pass size, etc. within the limits provided in the contract documents and the AWS D1.5, 2010 Bridge Welding Code.

STRUCTAL BRIDGES, a division of Canam Steel Corp.

WELDING PROCEDURE SPECIFICATION

FCM AND NON FCM WELDS

WPS Number: SM-200	Issue date:03-07-2013
Project: Jamaica VT., ER-BRF-015-1(23)	STRUCTAL job #.: UPO 1195
Base metal: ASTM A709 GR50W, HPS 50W	
Welding process: Sielded Metal Arc Welding	
Filler metal spec. and Trade Name.:AWS A5.5 Excalibur 8018-C3 MR	
Flux / shielding gas: N/A	
Current and polarity:DCEP	Electrical stickout:N/A
Welding position: 2G	
Preheat temp..:AWS D1.5 Table 4.3 / 12.3	WPS qualification:AWS D1.5 - 5.11
Heat input: 38-130 Kilojoules	Supporting PQR#: Pre Approved

electrode size	welding amps	welding volts	travel speed	Joint Detail : 2G
1/8"	125-150	23-26	3 - 4.5 I/M	
5/32"	140-190	23-26	3 - 4.5 I/M	
3/16"	180-250	23-26	3 - 4.5 I/M	

Notes: 8018 Stick electrodes to be used for weld repairs and tacking
weld repair and tack welding

Minimum preheat and interpass temperatures per AWS D1.5 Table 4.3 / 12.3

Maximum interpass temp. shall be 450°F

Thickness of thickest part at point of welding	FCM	Non FCM
up to 3/4"	125°F	50°F
3/4" to 1 1/2"	200°F	70°F
1 1/2" to 2 1/2"	225°F	150°F
over 2 1/2"	325°F	225°F

This procedure may vary due to fabrication sequence, fit up, pass size, etc. within the limits provided in the contract documents and the AWS D1.5, 2010 Bridge Welding Code.

STRUCTAL BRIDGES, a division of Canam Steel Corp.

WELDING PROCEDURE SPECIFICATION

FCM AND NON FCM WELDS

WPS Number: SM-300	Issue date:03-07-2013
Project: Jamaica VT., ER-BRF-015-1(23)	STRUCTAL job #.: UPO 1195
Base metal: ASTM A709 GR50W, HPS 50W	
Welding process: Sielded Metal Arc Welding	
Filler metal spec. and Trade Name.:AWS A5.5 Excalibur 8018-C3 MR	
Flux / shielding gas: N/A	
Current and polarity:DCEP	Electrical stickout:N/A
Welding position: 3F and 3G	
Preheat temp..:AWS D1.5 Table 4.3 / 12.3	WPS qualification:AWS D1.5 - 5.11
Heat input: 29.04 - 137.7 Kilojoules	Supporting PQR#: Pre Approved

electrode size	welding amps	welding volts	travel speed	Joint Detail : 3F and 3G
1/8"	110 - 130	21 - 22	3 - 4 I/M	
5/32"	130 - 140	21 - 22	2.75 - 3.5	

Notes: 8018 Stick electrodes to be used for weld repairs and tacking
weld repair and tack welding

Minimum preheat and interpass temperatures per AWS D1.5 Table 4.3 / 12.3

Maximum interpass temp. shall be 450˚F

Thickness of thickest part at point of welding	FCM	Non FCM
up to 3/4"	125˚F	50˚F
3/4" to 1 1/2"	200˚F	70˚F
1 1/2" to 2 1/2"	225˚F	150˚F
over 2 1/2"	325˚F	225˚F

This procedure may vary due to fabrication sequence, fit up, pass size, etc. within the limits provided in the contract documents and the AWS D1.5, 2010 Bridge Welding Code.

STRUCTAL BRIDGES, a division of Canam Steel Corp.

WELDING PROCEDURE SPECIFICATION

FCM AND NON FCM WELDS

WPS Number: SM-400	Issue date:03-07-2013
Project: Jamaica VT., ER-BRF-015-1(23)	STRUCTAL job #.: UPO 1195
Base metal: ASTM A709 GR50W, HPS 50W	
Welding process: Sielded Metal Arc Welding	
Filler metal spec. and Trade Name.:AWS A5.5 Excalibur 8018-C3 MR	
Flux / shielding gas: N/A	
Current and polarity:DCEP	Electrical stickout:N/A
Welding position: 4F and 4G	
Preheat temp..:AWS D1.5 Table 4.3 / 12.3	WPS qualification:AWS D1.5 - 5.11
Heat input: 29.04 - 137.7 Kilojoules	Supporting PQR#: Pre Approved

electrode size	welding amps	welding volts	travel speed	Joint Detail : 4Fand 4G
1/8"	125 - 150	23 - 26	3 - 4.5 I/M	
5/32"	140 - 190	23 - 26	3 - 4.5 I/M	

Notes: 8018 Stick electrodes to be used for weld repairs and tacking
weld repair and tack welding

Minimum preheat and interpass temperatures per AWS D1.5 Table 4.3 / 12.3

Maximum interpass temp. shall be 450˚F

Thickness of thickest part at point of welding	FCM	Non FCM
up to 3/4"	125˚F	50˚F
3/4" to 1 1/2"	200˚F	70˚F
1 1/2" to 2 1/2"	225˚F	150˚F
over 2 1/2"	325˚F	225˚F

This procedure may vary due to fabrication sequence, fit up, pass size, etc. within the limits provided in the contract documents and the AWS D1.5, 2010 Bridge Welding Code.