MILLER CONSTRUCTION, INC.

P.O. BOX 86 ASCUTNEY BLVD WINDSOR, VERMONT 05089-0086

TELEPHONE (802) 674-5525 / FAX (802) 674-5245

TRANSMITTAL

TO: Kristin Higgins Vermont Agency of Transportation	DATE	PROJECT NO.
	7/24/2013	Jamaica ER-BRF 015-1 (23)

XX WE ENCLOSE THE FOLLOWING: _____ UNDER SEPARATE COVER WE ARE SENDING THE FOLLOWING

COPIES	NUMBER	DESCRIPTION	CODE
1		Wingwall #1 Installation Plan - Rev 2	H

CODE:

A FOR INITIAL APPROVAL
B FOR FINAL APPROVAL
C APPROVED AS NOTED-RESUBMISSION REQUIRED
D APPROVED AS NOTED-RESUBMISSION NOT REQUIRED
E DISAPPROVED-RESUBMIT
F QUOTATION REQUESTED
G APPROVED
H FOR APPROVAL
I AS REQUESTED OR REQUIRED
J FOR USE IN ERECTION
K LETTER FOLLOWS
L FOR FIELD CHECK
M FOR YOUR USE

BY: Paul

Wingwall #1 Installation Plan
for
State of Vermont Project: Jamaica ER-BRF 015-1 (23)

Town of: Jamaica, Vermont
County of: Windham

Prepared By:

Miller Construction, Inc.
P.O. Box 86
Windsor, VT 05089
Tel. (802) 674-5525
Fax. (802) 674-5245

April 5, 2013

Revised June 21, 2013
Revised July 24, 2013

Wingwall #1 Installation Plan for State of Vermont Project: Jamaica ER-BRF 015-1 (23)

TABLE OF CONTENTS

Overview	1
Procedure	1
Wingwall 1 Elevation View	2
Approach Slab Plan View	3
Approach Slab Construction Joint	4
Retaining Wall Plan View	5
Retaining Wall Elevation View	6
Retaining Wall Calculations	7-9
D.B.S. Female End	10
D.B.S. Male End	11
HCA Anchor Technical Specifications	12-14

Wingwall #1 Installation Plan
Jamaica ER-BRF 015-1 (23)

Overview

The Jamaica ER-BRF 015-1 (23) project involves the replacement of Bridge 30 which is located in the Town of Jamaica on Vermont Route 30, approximately 4.8 miles South of the Northern junction of Vermont Route 100 and 30. There is currently a temporary bridge in place, off alignment, that was installed after Tropical Storm Irene. The new structure will be approximately 132 feet in length with 243 feet of roadway work. This project also involves the replacement of an existing box culvert. The new precast concrete box culvert will be approximately 85 feet in length.

The existing temporary bridge approach and approach rail conflicts with the location of Wingwall #1 on the Southeast corner of the bridge.

Miller Construction, Inc. plan for the installation of Wingwall #1 to include a precast section from elevation 721.35 to elevation 729.65 spliced and grouted to the abutment, with a cast-in-place wingtop from elevation 729.65 to elevation 733.00 has been revised.

The revised plan for the installation of Wingwall #1 includes Wingwall #1 being cast-in-place after traffic has been routed onto the new bridge and the temporary approach is removed.

Procedure

The female end of #6 dowel bar substitutes shall be cast into Abutment #1 at 12 inch spacing. 3 sets of dowel bar substitutes shall be provided to VTrans Materials & Research for required testing. Reinforcing steel below the bridge seat (Elev. 727.06) shall be Level I. All reinforcing steel above the bridge seat (Elev. 727.06) shall be Level II. Due to difficulty obtaining Level II dowel bar substitutes, epoxy coated connectors shall be used where Level II is otherwise required (Per original review of this plan).

After placement and stripping of Abutment #1, one inch thick road plate shall be installed perpendicular to Abutment #1, 2 ft. North of P1. An L6 x 4 x 5/8 shall be mechanically attached to the back face of the abutment using Hilti HCA Coil Anchors (plate bearing on the long leg of the angle). Approximate width of the steel plate is 5 feet and it shall run behind existing in-place sheet piling on the opposite end. The Abutment shall be backfilled after steel plate installation is complete.

The width of the approach slab shall be reduced by 5 feet on the South side of the slab until Wingwall #1 installation is complete and backfilled. With the addition of jersey barriers, the lane width will remain 10 feet during the installation of Wingwall #1, and no additional traffic control measures shall be required. Epoxy coated Bar Lock Couplers shall be installed in order to splice reinforcing steel for the remaining 5 feet of width, which shall be placed after Wingwall #1 is installed, properly cured, and backfilled.

Miller Construction, Inc.
3103 US Route 5 South
P.O. Box 86
Windsor, Vermont 05089
802-674-5525 Fax: 802-674-5245

JOB **Jamaica ER BRF 015-1 (23)**
SHEET NO. 2 OF 14
CALCULATED BY **PJH** DATE **18 July 2013**
CHECKED BY _____ DATE _____
SCALE **N.T.S.**

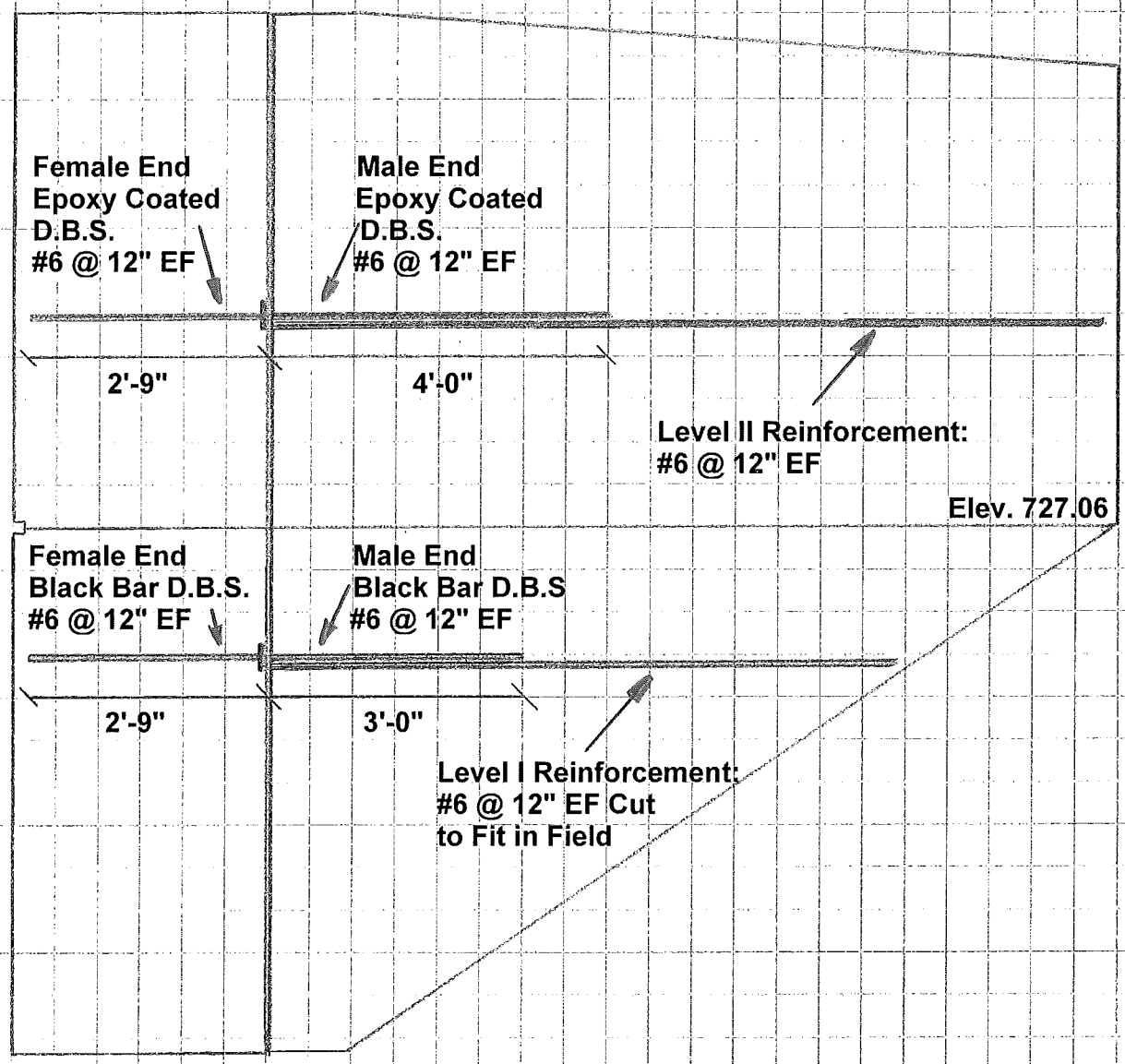

Wingwall I Elevation

D.B.S. = Dowel Bar Substitute
3" Clear Unless Otherwise Specified

Reorder From NEBS CUSTOM printing service 1-800-886-6327 NEBS, Inc. Groton, MA 01471 www.nebs.com Ref. No: G 016202306

Miller Construction, Inc.
3103 US Route 5 South
P.O. Box 86
Windsor, Vermont 05089
802-674-5525 Fax: 802-674-5245

JOB Jamaica ER BRF 015-1 (23)
SHEET NO. 3 OF 14
CALCULATED BY PJH DATE 18 July 2013
CHECKED BY DATE
SCALE N.T.S.

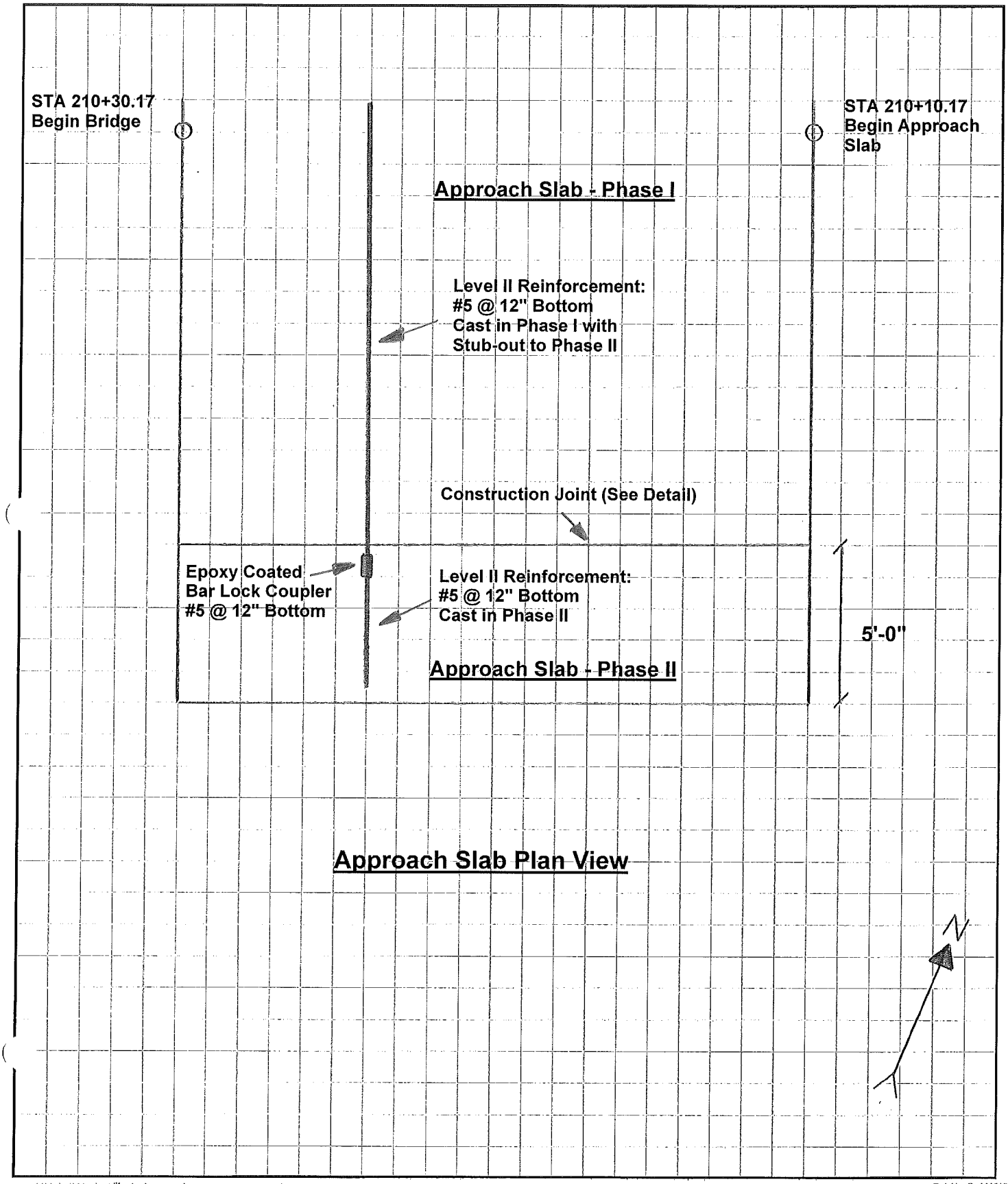

Approach Slab Plan View

Reorder From NEBS CUSTOM printing service 1-800-388-6327 NEBS, Inc. Groton, MA 01471 www.nebs.com Ref. No: G 346202306

Miller Construction, Inc.
3103 US Route 5 South
P.O. Box 86
Windsor, Vermont 05089
802-674-5525 Fax: 802-674-5245

JOB **Jamaica ER BRF 015-1 (23)**
SHEET NO. 4 OF 14
CALCULATED BY **PJH** DATE **18 July 2013**
CHECKED BY _____ DATE _____
SCALE **N.T.S.**

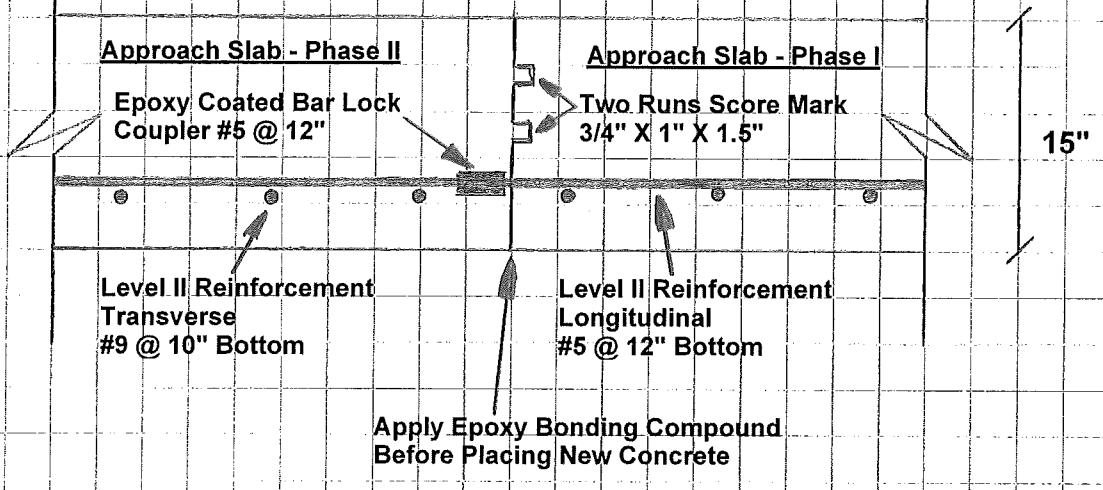

Approach Slab Construction Joint

Order From NEBS CUSTOM printing service 1-800-283-6327 NEBS, Inc. Groton, MA 01471 www.nebs.com Ref. No: G 346202306

Miller Construction, Inc.
3103 US Route 5 South
P.O. Box 86
Windsor, Vermont 05089
802-674-5525 Fax: 802-674-5245

JOB JAMAICA ER BRF 015-1 (23)
SHEET NO. 5 OF 14
CALCULATED BY PJH DATE 24 JULY 2013
CHECKED BY DATE
SCALE NTS

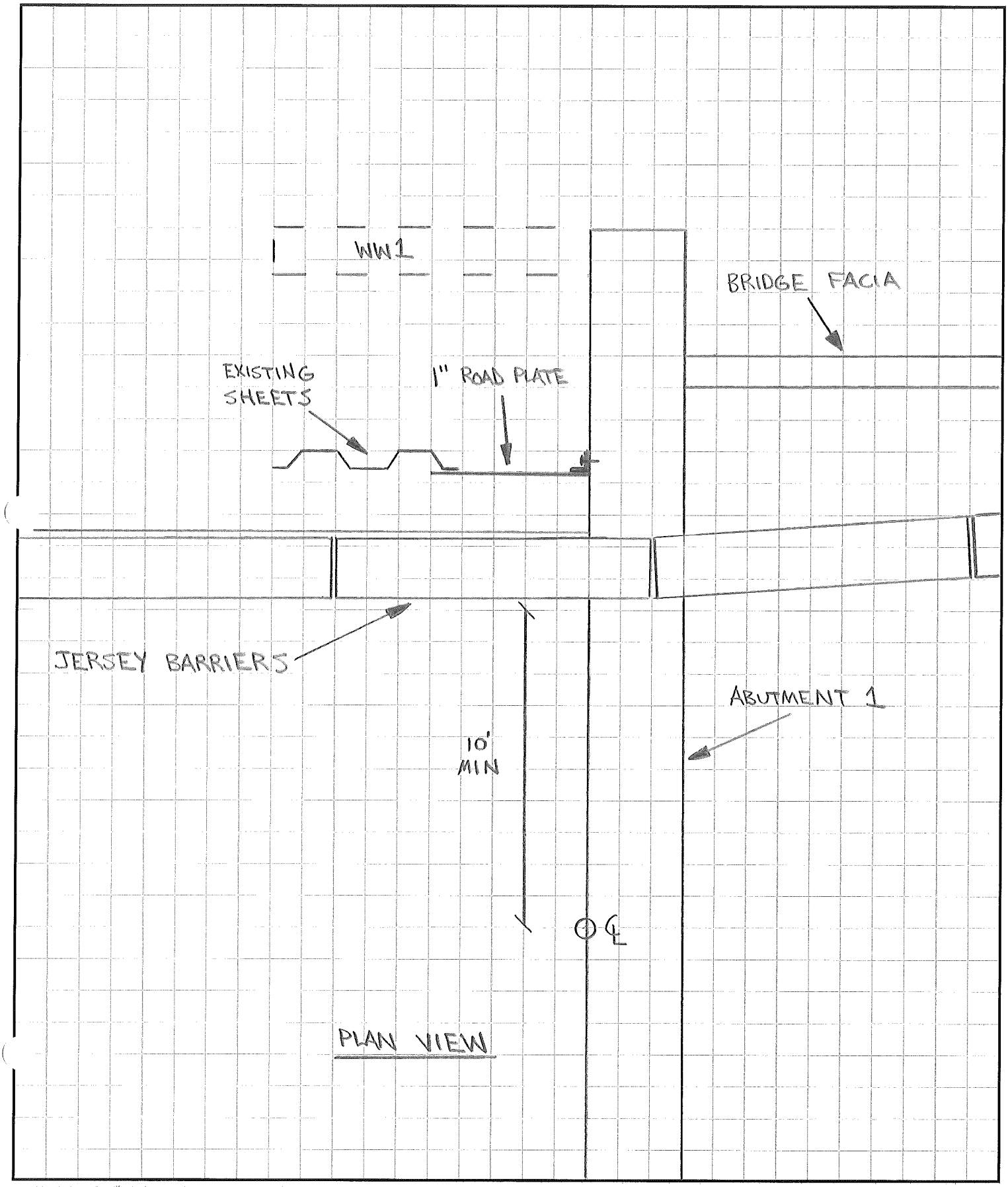

PLAN VIEW

order from NEBS CUSTOM printing service 1-800-388-6327 NEBS, Inc. Groton, MA 01471 www.nebs.com Ref. No: G 346202306

Miller Construction, Inc.
3103 US Route 5 South
P.O. Box 86
Windsor, Vermont 05089
802-674-5525 Fax: 802-674-5245

JOB JAMAICA ER BRF 015-1 (23)
SHEET NO. 6 OF 14
CALCULATED BY PJH DATE 24 JULY 2013
CHECKED BY DATE
SCALE NTS

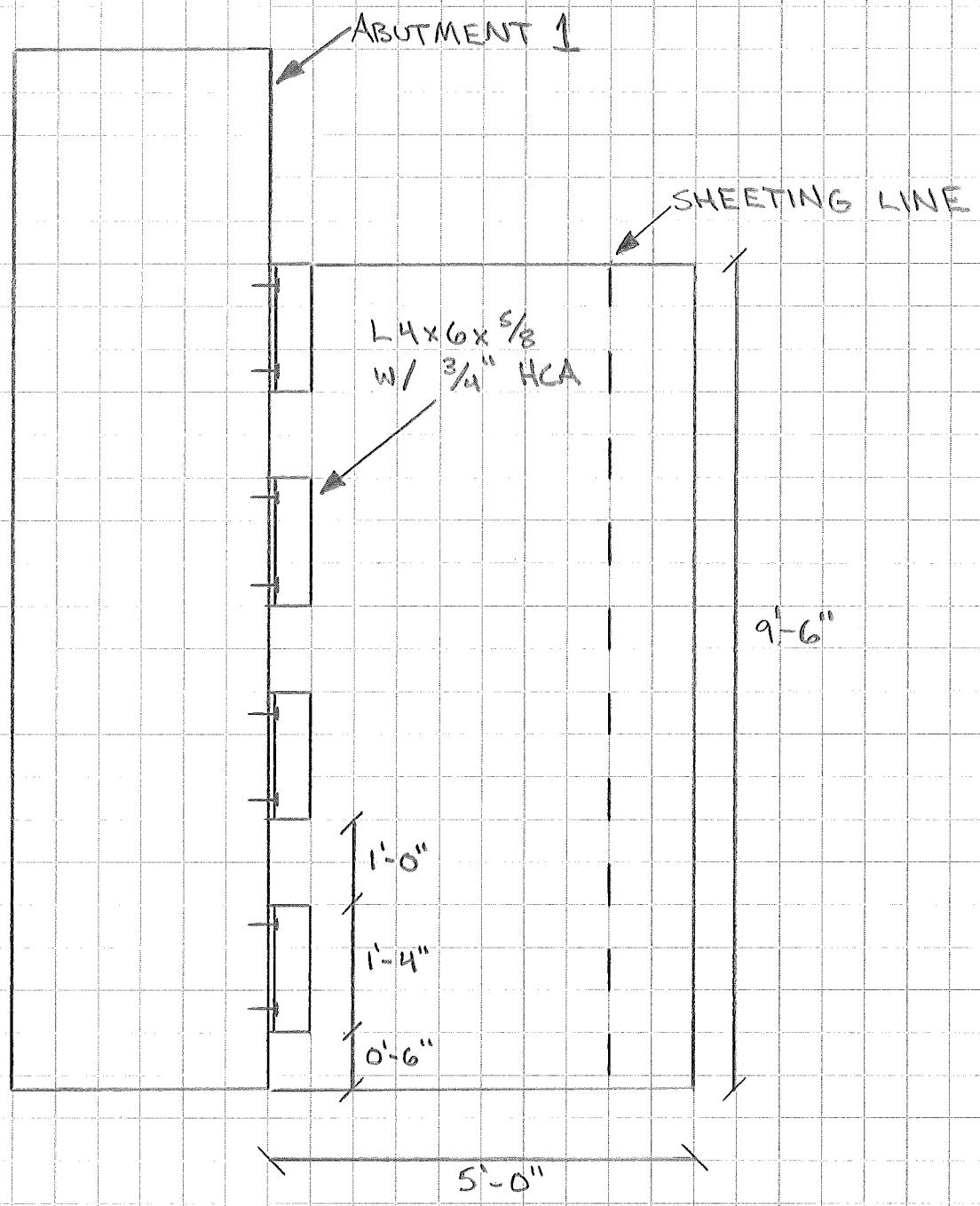

ELEVATION VIEW

Reorder From NEBS CUSTOM printing service 1-800-225-6927 NEBS, Inc. Groton, MA 01471 www.nebs.com Ref. No: G 346202306

Miller Construction, Inc.
3103 US Route 5 South
P.O. Box 86
Windsor, Vermont 05089
802-674-5525 Fax: 802-674-5245

JOB JAMAICA ER BRF 015-1 (23)
SHEET NO. 7 OF 14
CALCULATED BY PJH DATE 24 JULY 2013
CHECKED BY DATE
SCALE NTS

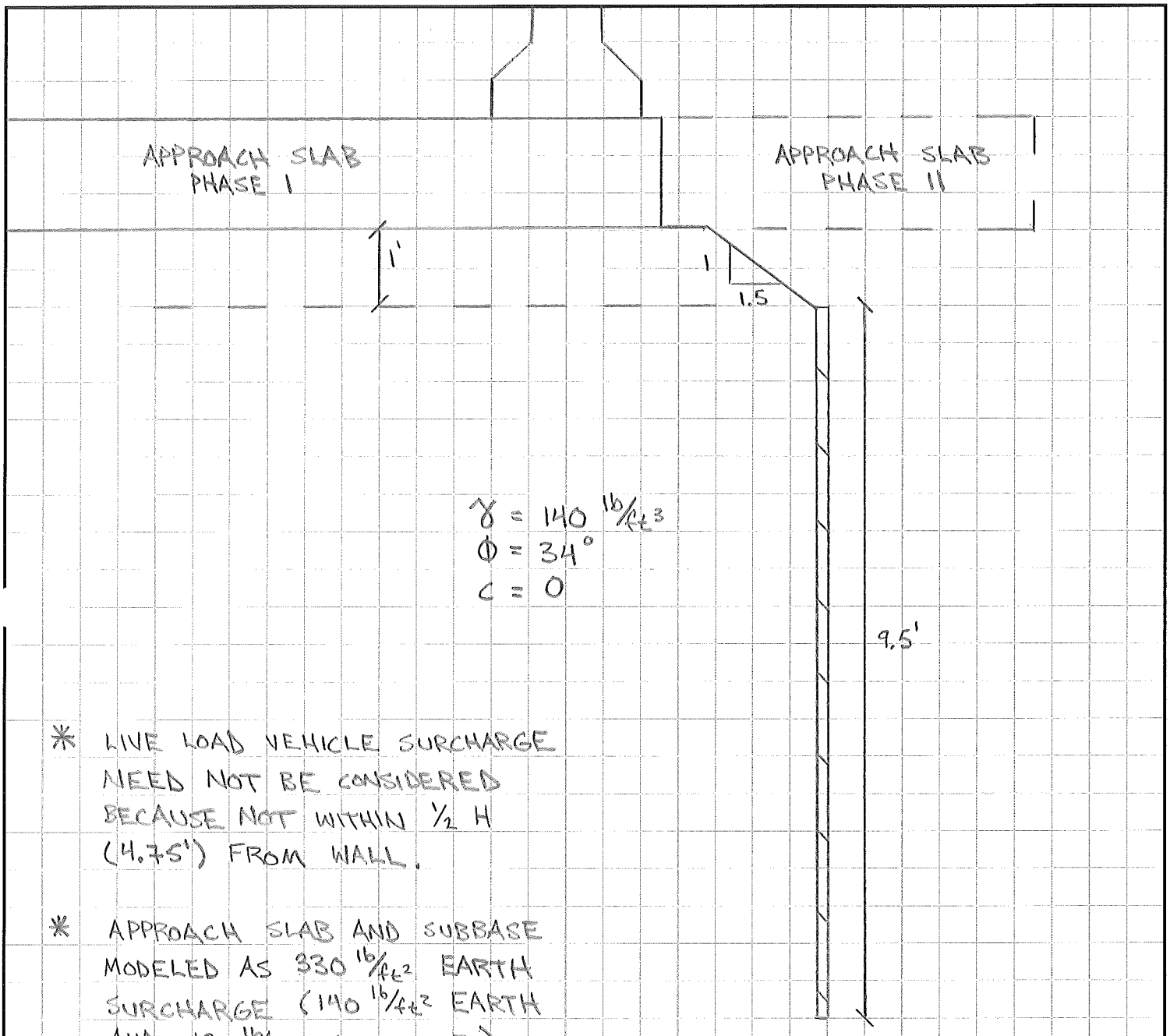

$\gamma = 140\ lb/ft^3$
$\phi = 34°$
$c = 0$

* LIVE LOAD VEHICLE SURCHARGE NEED NOT BE CONSIDERED BECAUSE NOT WITHIN ½ H (4.75') FROM WALL.

* APPROACH SLAB AND SUBBASE MODELED AS 330 lb/ft^2 EARTH SURCHARGE (140 lb/ft^2 EARTH AND 190 lb/ft^2 CONCRETE)

* ASSUME SEISMIC LOADING DOES NOT NEED TO BE EVALUATED

Reorder From NEBS CUSTOM printing service 1-800-288-6327 NEBS, Inc. Groton, MA 01471 www.nebs.com Ref. No: G 346202306

Miller Construction, Inc.
3103 US Route 5 South
P.O. Box 86
Windsor, Vermont 05089
802-674-5525 Fax: 802-674-5245

JOB JAMAICA ER BRF 015-1 (23)
SHEET NO. 8 OF 14
CALCULATED BY RJH DATE 24 JULY 2013
CHECKED BY DATE
SCALE NTS

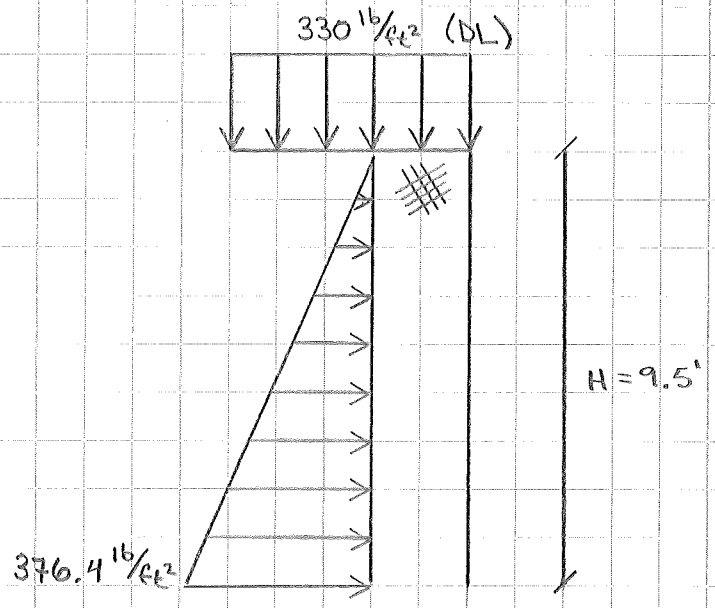

$P_{MAX} = 140\ lb/ft^3 (0.283)(9.5\ ft)$

$= 376.4\ lb/ft^2$

$P' = 330\ lb/ft^3 (0.283)$

$= 93.4\ lb/ft^2$

$\therefore P_{TOTAL} = \underline{469.8\ lb/ft^2}$

CONSIDER 1 ft STRIP AT BOTTOM OF ROAD PLATE:

$f = 36$ ksi (ASSUMED)

$S = bh^2/6 = (12)(1)^2/6 = 2\ in^3$

$I = bh^3/12 = (12)(1)^3/12 = 1\ in^4$

$E = 29{,}000{,}000\ lb/in^2$

BENDING:

$$l = 10.95\sqrt{\frac{fS}{w}} = 10.95\sqrt{\frac{(36\ ksi)(2\ in^3)}{469.8\ lb/ft}}$$

$\therefore \underline{l = 135.56\ in.}$

DELFLECTION:

$$l = 3.84\sqrt[4]{\frac{EI}{w}} \qquad \Delta_{max} = 1/8\ in. \qquad = 3.84\sqrt[4]{\frac{(29e^6\ lb/in^2)(1\ in^4)}{469.8\ lb/ft}}$$

$\therefore \underline{l = 60.53\ in.}$

order From NEBS CUSTOM printing service 1-800-883-6327 NEBS, Inc. Groton, MA 01471 www.nebs.com Ref. No: G 316202300

Miller Construction, Inc.
3103 US Route 5 South
P.O. Box 86
Windsor, Vermont 05089
802-674-5525 Fax: 802-674-5245

SHEAR:

$$f_v = \frac{0.9\,w}{bd}\left(L - \frac{2d}{12}\right)$$

$$= \frac{0.9(469.8\ \text{lb/ft})}{(12\ \text{in})(1\ \text{in})}\left(5\ \text{ft} - \frac{2(1\ \text{in})}{12}\right)$$

$$\therefore\ f_v = 170\ \text{lb/in}^2$$

170 lb/in² WELL BELOW F_v' FOR 36 ksi STEEL

∴ 1/8 in. DEFLECTION CONTROLS AT 5 ft. SPAN

∴ 5 ft. X 9.5 ft. X 1 in. ROAD PLATE ACCEPTABLE

ALLOWABLE SHEAR CAPACITY OF 3/4 in. HILTI HCA COIL ANCHOR

= 5540 lbs.

∴ 5 EA HCA ANCHORS REQUIRED TO SUPPORT P_{TOTAL}
8 EA HCA ANCHORS INCLUDED IN DESIGN TO SUPPORT 1/2 P_{TOTAL}

SHEET PILING WALL ON WEST END OF ROAD PLATE ADEQUATE TO SUPPORT 1/2 P_{TOTAL} POINT LOAD ON EDGE AND WELL WITHIN ALLOWABLE STEEL BEARING CAPACITY.

Reorder From NEBS CUSTOM printing service 1-800-225-6327 NEBS, Inc. Groton, MA 01471 www.nebs.com Ref. No: G 346202000

10/14

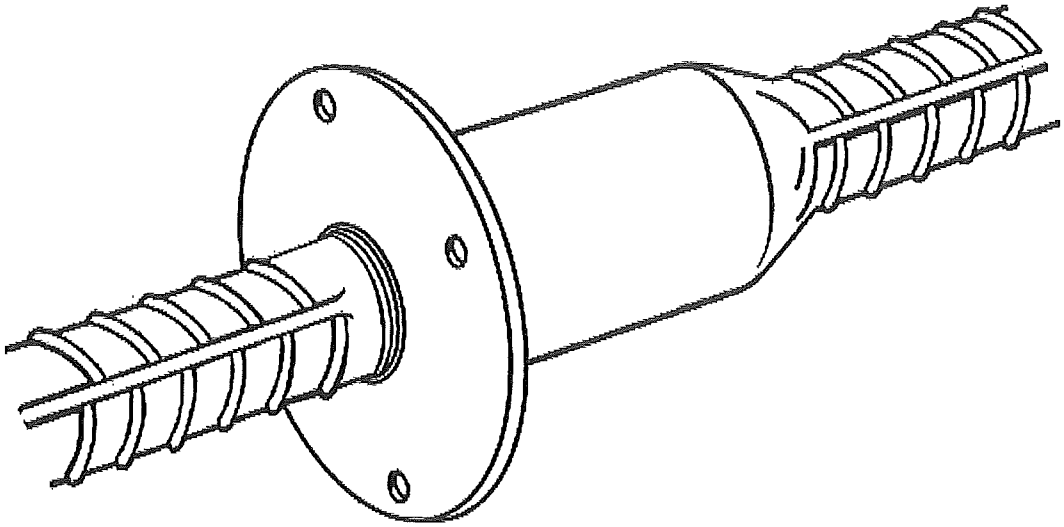

11/14

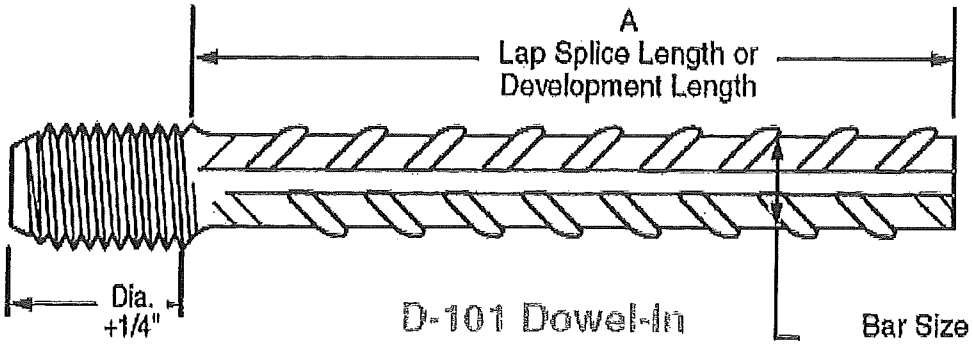
A
Lap Splice Length or
Development Length
Dia.
+1/4"
D-101 Dowel-In
Bar Size

3.3.8 HCA Coil Anchor

12/14

3.3.8.1 Product Description
3.3.8.2 Material Specifications
3.3.8.3 Technical Data
3.3.8.4 Installation Instructions
3.3.8.5 Ordering Information

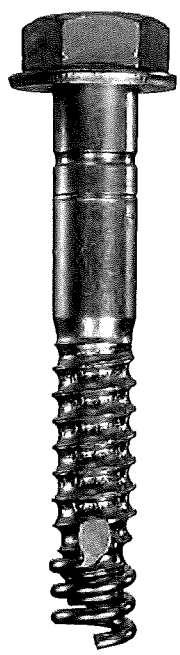

3.3.8.1 Product Description

The Hilti HCA Coil Anchor is a bolt type expansion anchor for use in concrete.

Product Features

- Reusable type anchors, providing major cost savings*
- Bolt type anchor enables low profile fastenings
- Preassembled units allow quick production fastening
- Utilizes a disposable, low cost expansion coil which minimizes reuse costs
- Heat treated to Grade 5 specification, which provides high shear load capacity

Guide Specifications

Expansion Anchor – Expansion anchors shall be bolt style which meet the mechanical properties of a Grade 5 bolt. Anchors are to be zinc plated in accordance with ASTM B633, SC1, Type III. Anchors shall be Hilti HCA designation as supplied by Hilti.

Installation – Install bolt type anchors in holes drilled with Hilti carbide tipped drill bits or DD-B or DD-C diamond core bits. Install anchors as per manufacturer's recommendation.

* Test results when reused four uses: maximum 20% reduction in tensile capacity; no reduction in shear.

3.3.8.2 Material Specifications

	Mechanical Properties
	min. f_u ksi (MPa)
1/4" HCA Carbon Steel meets the requirements of case of hardened AISI 1018	100 (690)
3/8"– 3/4" HCA Carbon Steel meets the chemical requirements of AISI 1035 and heat treated to Grade 5 specification	120 (830)
Coil meets the requirements of plain carbon steel	
Carbon Steel HCA and coil are plated in accordance with ASTM B633, SC1, Type III	

Table 2 - HCA Lengths[2]

Diameter	Length ℓ in.	(mm)
1/4	1-3/4	(44)
	2-1/2	(64)
	3-1/2	(89)
3/8	2-1/4	(57)
	3	(76)
	5	(127)
1/2	3	(76)
	4	(102)
	5-1/2	(140)
	7	(178)
3/8	3-1/2	(89)
	5	(127)
	8	(203)
3/4	4-1/2	(114)
	6	(152)
	10	(254)

3.3.8.3 Technical Data

Table 1 - HCA Specification Table

Details		Bolt Size	in.	1/4	3/8	1/2	5/8	3/4
d_{bit}	nominal bit diameter[1]		in.	1/4	3/8	1/2	5/8	3/4
h_s	depth set mark		in.	3/8	5/8	5/8	3/4	1
ℓ	anchor length min./max. (other lengths available)		in.	1-3/4	2-1/4	3	3-1/2	4-1/2
			in.	3-1/2	5	7	8	10
d_h	coil clearance hole in plate		in.	5/16	7/16	9/16	11/16	13/16
T_{inst}	installation torque		ft-lb	10	40	80	130	180
h	min. base material thickness		in.	3" or 1.3 h_{ef} whichever is greater				

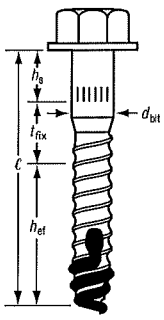

1 Hilti carbide-tipped drill bit or matched tolerance Hilti DD-B or DD-C diamond core bits

2 Maximum thickness to be fastened $t = \ell - (h_{ef} + h_s)$

Combined Shear and Tension Loading

$$\left(\frac{N_d}{N_{rec}}\right)^{5/3} + \left(\frac{V_d}{V_{rec}}\right)^{5/3} \leq 1.0 \text{ (Ref. Section 4.1.8.3)}$$

13/14

Table 3 - Carbon Steel HCA Allowable Concrete/Steel Capacity in Concrete[1]

Anchor Diameter in.	Embedment Depth in.	Allowable Concrete Capacity[3,4], lb							
		2000 psi		4000 psi		6000 psi		Allowable Steel Strength[2], lb	
		Tension[5]	Shear	Tension[5]	Shear	Tension[5]	Shear	Tension	Shear
1/4	3/4	230	230	325	330	400	400	1620	1080
	1	355	380	500	535	615	655		
3/8	1-1/2	650	850	920	1205	990	1475	4355	2905
	2	1005	1390	1420	1965	1740	2410		
1/2	2	1005	1515	1420	2145	1740	2625	7775	5180
	3	1845	3020	2605	4270	3190	5230		
5/8	2-3/8	1300	2175	1835	3075	2250	3765	12145	8095
	3-7/8	2705	5000	3825	7070	4685	8660		
3/4	3-1/4	2080	3915	2940	5540	3600	6780	17495	11665
	4-1/2	3385	6810	4790	9630	5865	11705		

1 Apply any applicable edge distance and anchor spacing reduction factors to the concrete capacity prior to determining if concrete or steel capacity control design. See Table 5 in this Section.

2 Steel strength based on 0.22 F_uA_g for shear and 0.33 F_uA_g for tension.

3 Concrete strength based on a safety factor of 4.0.

4 Test results when reused four times: maximum 20% reduction in tensile capacity; no reduction in shear.

Table 4 - Carbon Steel HCA Ultimate Concrete/Steel Capacity in Concrete[1]

Anchor Diameter in.	Embedment Depth in.	Ultimate Concrete Capacity[3,4], lb							
		2000 psi		4000 psi		6000 psi		Ultimate Steel Strength[2], lb	
		Tension[5]	Shear	Tension[5]	Shear	Tension[5]	Shear	Tension	Shear
1/4	3/4	920	930	1305	1315	1595	1610	3675	2830
	1	1420	1515	2005	2145	2460	2625		
3/8	1-1/2	2610	3410	3690	4825	4515	5910	9900	7615
	2	4015	5565	5675	7865	6950	9635		
1/2	2	4015	6065	5675	8575	6950	10505	17665	13570
	3	7375	12080	10430	17085	12770	20930		
5/8	2-3/8	5195	8700	7345	12305	9000	15070	27605	21240
	3-7/8	10825	19995	15305	28275	18745	34630		
3/4	3-1/4	8315	15660	11760	22150	14400	27125	39760	30590
	4-1/2	13545	27235	19160	38515	23465	47170		

1 Apply any applicable edge distance and anchor spacing reduction factors to the concrete capacity prior to determining if concrete or steel capacity control design. See Table 5 in this Section.

2 Steel strength based on 0.57 F_uA_g for shear and 0.75 F_uA_g for tension.

3 Concrete capacity based on Concrete Capacity Design method and verified by test data.

4 Test results when reused four times: maximum 20% reduction in tensile capacity; no reduction in shear.

Table 5 - HCA Edge Distance and Anchor Spacing Guidelines[1,2]

	Load Direction	Critical	Minimum	Influence Factor[3]
Spacing	Tension	3.0 h_{ef}	1.0 h_{ef}	$f_{AN} = 0.70$
	Shear	2.0 h_{ef}	1.0 h_{ef}	$f_{AV} = 0.70$
Edge Distance	Tension	1.5 h_{ef}	0.8 h_{ef}	$f_{RN} = 0.75$
	Shear (⊥ toward edge)[4]	2.5 h_{ef}	1.0 h_{ef}	$f_{RV1} = 0.25$
	Shear (II or ⊥ away from edge)[4]	2.5 h_{ef}	1.0 h_{ef}	$f_{RV2} = 0.50$

See Note 4

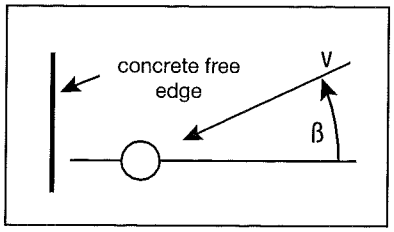

1 For edge and spacing distances between critical and minimum spacing/edge distances, use linear interpolation.

2 Influence factors are cumulative.

3 Influence factor at minimum spacing/edge distance. Influence factor at critical equals 1.0.

4 For shear loads in between perpendicular toward edge and parallel with edge, use the following equation, $f_{RVß} = 0.25 / (\cos ß + 0.5 \sin ß)$ for $55° \le ß < 90°$. For $0° \le ß < 55°$, use influence factor for shear perpendicular toward edge.

3.3.8 HCA Coil Anchor

14/14

3.3.8.4 Installation Instructions

Important Installation Considerations

1. Hole depth is determined by the anchor length minus fixture thickness plus 1/4" minimum.
2. When reassembling the coil tab onto the tapered end of the bolt, the flattened portion (tang) must be in the direction of the head.
3. Anchors are to be initially inserted to where the depth set mark is flush with the surface of the fixture. Tap the anchor to the depth mark before tightening.

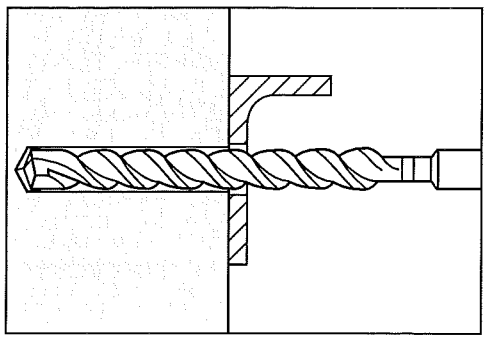

Drill hole same diameter as anchor

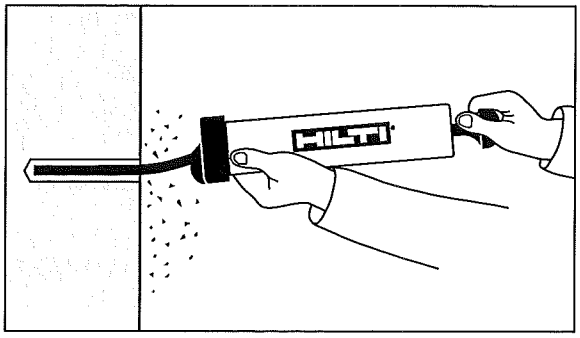

Clean hole

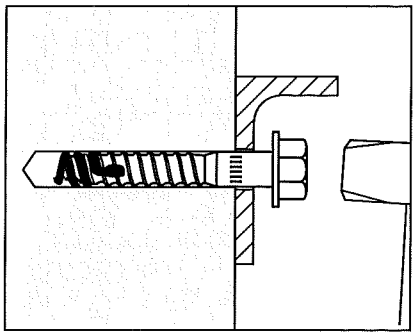

Insert (tap anchor) to anchor's **depth set mark**

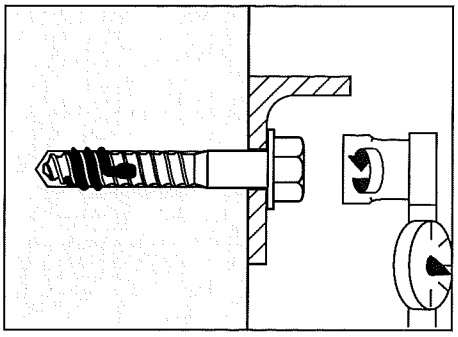

Tighten to installation torque

3.3.8.5 Ordering Information

HCA HEX HEAD

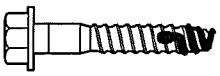

Description	Box Qty.	Bit Dia.	Fixture Thickness at minimum embedment depth
HCA 1/4" X 1-3/4"	100	1/4"	5/8"
HCA 1/4" X 2-1/2"	100	1/4"	1-3/8"
HCA 1/4" X 3-1/2"	100	1/4"	2-3/8"
HCA 3/8" X 2-1/4"	100	3/8"	1/8"
HCA 3/8" X 3"	100	3/8"	7/8"
HCA 3/8" X 5"	50	3/8"	2-7/8"
HCA 1/2" X 3"	50	1/2"	3/8"
HCA 1/2" X 4"	25	1/2"	1-3/8"
HCA 1/2" X 5-1/2"	25	1/2"	2-7/8"
HCA 1/2" X 7"	25	1/2"	4-3/8"
HCA 5/8" X 3-1/2"	25	5/8"	3/8"
HCA 5/8" X 5"	25	5/8"	1-7/8"
HCA 5/8" X 8"	20	5/8"	4-7/8"
HCA 3/4" X 4-1/2"	20	3/4"	1/4"
HCA 3/4" X 6"	10	3/4"	1-3/4"
HCA 3/4" X 10"	10	3/4"	5-3/4"

HCT Replacement Coil

Description	Box Qty.
HCT 1/4"	100
HCT 3/8"	100
HCT 1/2"	100
HCT 5/8"	100
HCT 3/4"	50

* Test results when reused four times: maximum 20% reduction in tensile capacity; no reduction in shear.