STATE OF VERMONT
AGENCY OF TRANSPORTATION

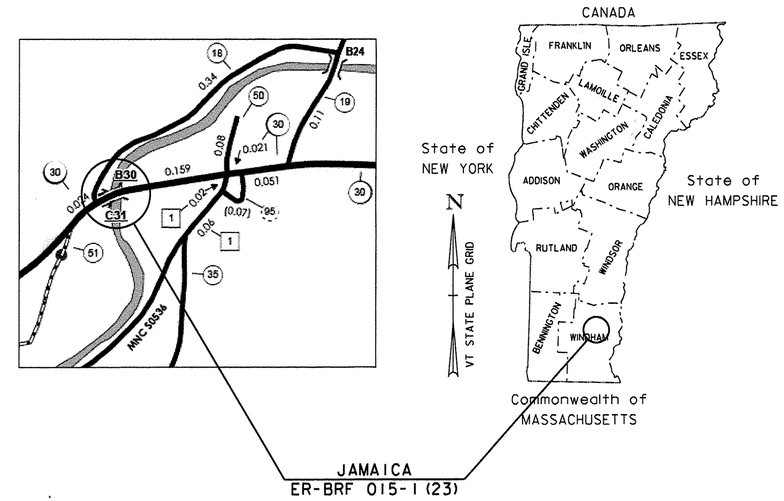

PROPOSED IMPROVEMENT
BRIDGE PROJECT

TOWN OF JAMAICA

COUNTY OF WINDHAM

ROUTE NO : VT RTE 30 (MINOR ARTERIAL) BRIDGE NO : 30

PROJECT LOCATION : LOCATED 4.8 MILES SOUTH OF THE NORTHERN JUNCTION OF VT 100 AND VT 30 AT MILE MARKER 3.99 (STA 209+75) AND PROCEEDS SOUTHWESTERLY FOR 375 FEET TO MILE MARKER 4.06 (STA 213+50).

PROJECT DESCRIPTION : REPLACE EXISTING BRIDGE AND BOX CULVERT WITH RELATED ROADWAY APPROACH AND CHANNEL WORK.

LENGTH OF STRUCTURE : 131.66 FEET.
LENGTH OF ROADWAY : 243.34 FEET.
LENGTH OF PROJECT : 375.00 FEET.

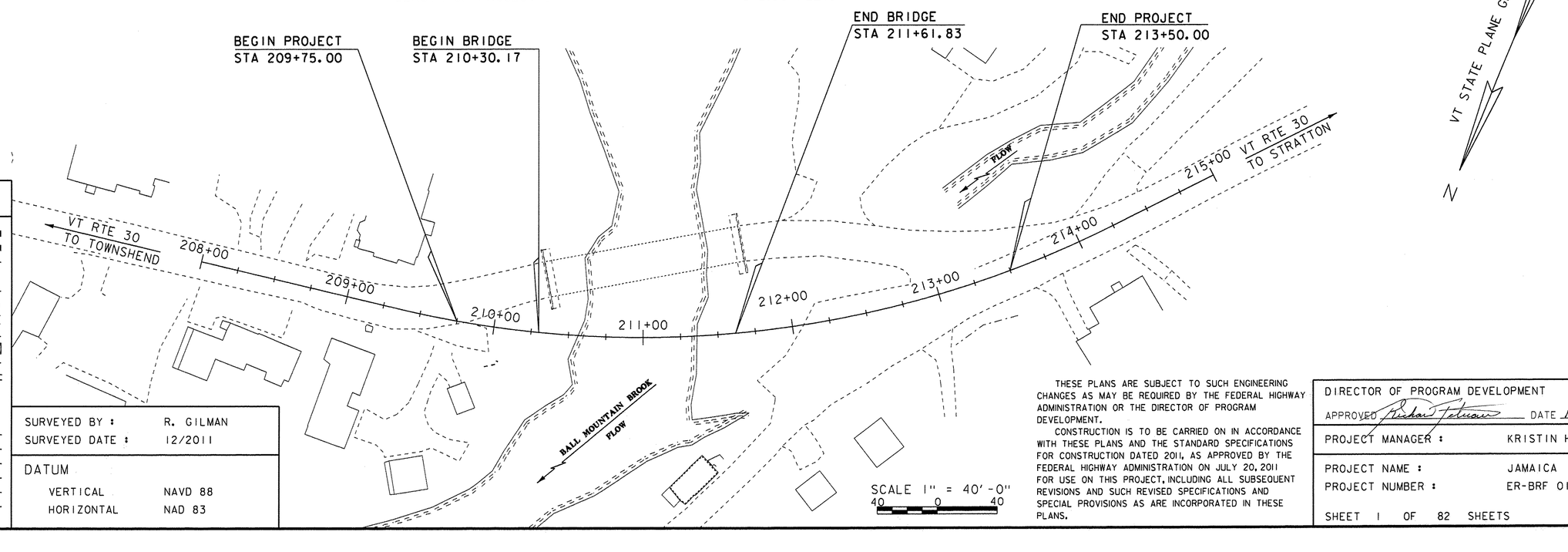

QUALITY ASSURANCE PROGRAM: LEVEL 2

CONVENTIONAL SYMBOLS

COUNTY LINE
TOWN LINE
LIMITS OF ACCESS
POINT OF ACCESS
FENCE LINE
STONE WALL
TRAVELED WAY
GUARD RAIL
RAILROAD
SURVEY LINE
CULVERT
POWER POLE
TELEPHONE POLE
TREES
CONTROL OF ACCESS
PROPERTY LINE
R.O.W. TAKING LINE
SLOPE RIGHTS
TOP OF CUT
TOE OF SLOPE

SURVEYED BY : R. GILMAN
SURVEYED DATE : 12/2011

DATUM
VERTICAL NAVD 88
HORIZONTAL NAD 83

THESE PLANS ARE SUBJECT TO SUCH ENGINEERING CHANGES AS MAY BE REQUIRED BY THE FEDERAL HIGHWAY ADMINISTRATION OR THE DIRECTOR OF PROGRAM DEVELOPMENT.

CONSTRUCTION IS TO BE CARRIED ON IN ACCORDANCE WITH THESE PLANS AND THE STANDARD SPECIFICATIONS FOR CONSTRUCTION DATED 2011, AS APPROVED BY THE FEDERAL HIGHWAY ADMINISTRATION ON JULY 20, 2011 FOR USE ON THIS PROJECT, INCLUDING ALL SUBSEQUENT REVISIONS AND SUCH REVISED SPECIFICATIONS AND SPECIAL PROVISIONS AS ARE INCORPORATED IN THESE PLANS.

DIRECTOR OF PROGRAM DEVELOPMENT
APPROVED Richard Tetreault DATE 11-29-12

PROJECT MANAGER : KRISTIN HIGGINS

PROJECT NAME : JAMAICA
PROJECT NUMBER : ER-BRF 015-1 (23)

SHEET 1 OF 82 SHEETS

STATE OF VERMONT
AGENCY OF TRANSPORTATION

PRELIMINARY INFORMATION SHEET (BRIDGE)

Version 11.06.15

LRFD

INDEX OF SHEETS

PLAN SHEETS

1	TITLE SHEET
2	PRELIMINARY INFORMATION SHEET (BRIDGE)
3	PRELIMINARY INFORMATION SHEET (BOX CULVERT)
4	GENERAL NOTES
5 - 7	QUANTITY SHEET 1-3
8	BRIDGE QUANTITY SHEET
9 - 10	TYPICAL SECTIONS 1-2
11	TIE SHEET
12	ALIGNMENT
13 - 14	LAYOUT 1-2
15 - 16	MAINLINE PROFILE 1-2
17	FIRE DRIVE & WATER STREET PROFILES
18	BOX CULVERT PROFILE
19	DRAINAGE PIPE PROFILE
20	DRAINAGE DETAIL SHEET
21 - 22	SIGN & PAVEMENT MARKINGS 1-2
23	PROPOSED UTILITY LAYOUT
24	RAIL LAYOUT
25	BRIDGE RAIL DETAILS
26	APPROACH RAIL WW1 AND WW3
27	APPROACH RAIL WW2 AND WW4
28 - 29	APPROACH RAIL DETAILS 1-2
30	BORING LAYOUT SHEET
31 - 33	BORING LOGS 1-3
34	DECK REINFORCING PLAN
35	FRAMING PLAN & GIRDER ELEVATION
36	CAMBER & DEFLECTION
37	BEARING DETAILS
38	APPROACH SLAB DETAILS
39 - 40	ABUTMENTS 1-2
41 - 42	WINGWALLS 1-2
43	BOX LAYOUT
44	EPSC NARRATIVE
45 - 46	EPSC EXISTING CONDITIONS SHEET 1-2
47 - 48	EPSC DURING CONSTRUCTION SHEET 1-2
49 - 50	EPSC FINAL CONDITIONS SHEET 1-2
51 - 53	EPSC DETAILS 1-3
54 - 55	MATERIAL TRANSITION / BANKING DIAGRAMS 1-2
56 - 61	MAINLINE SECTIONS 1-6
62 - 63	WATER STREET SECTIONS 1-2
64 - 65	FIRE DRIVE SECTIONS 1-2
66 - 69	BOX CULVERT SECTIONS 1-4
70 - 79	CHANNEL SECTIONS 1-10
80	ROW DETAIL SHEET
81 - 82	ROW LAYOUT SHEETS 1-2

STANDARDS LIST

C-2A	PORTLAND CEMENT CONCRETE SIDEWALK DRIVE ENTRANCES WITH SIDEWALK A	10-14-2005
C-10	CURBING	02-11-2008
D-1	PRECAST REINFORCED CONCRETE DROP INLET DETAILS	06-01-1994
E-100	CONSTRUCTION APPROACH SIGNS	01-02-2004
E-100A	SIDE ROAD CONSTRUCTION - APPROACH SIGNS	01-02-2004
E-101	CONSTRUCTION SIGN DETAILS	05-30-2003
E-102	CONSTRUCTION SIGN DETAILS	06-30-2003
E-102A	CONSTRUCTION SIGN DETAILS	05-01-2004
E-107	DELINEATION, BARRICADES AND DETOURS FOR CONSTRUCTION AREAS	06-30-2003
E-107A	BREAKAWAY BARRICADE DETAILS	06-08-2009
E-121	STANDARD SIGN PLACEMENT - CONVENTIONAL ROAD	08-08-1995
E-134	BRIDGE NUMBER PLAQUE	08-08-1995
E-140	REGULATORY SIGN DETAILS	08-30-1996
E-141	REGULATORY SIGN DETAILS	09-20-1995
E-143	REGULATORY SIGN DETAILS	06-15-2004
E-152	WARNING SIGN DETAILS	05-01-2004
E-154	WARNING SIGN DETAILS	05-01-2004
E-164	SQUARE STEEL SIGN POST	06-08-2009
E-191	PAVEMENT MARKING DETAILS	02-01-1999
E-193	PAVEMENT MARKING DETAILS	08-18-1995
G-1B	BOX BEAM GUARD RAIL	06-01-1994
S-352A	BRIDGE RAILING, GALVANIZED STEEL TUBING/CONCRETE COMBINATION	08-22-2012
S-352B	BRIDGE RAILING, GALVANIZED STEEL TUBING/CONCRETE COMBINATION	08-22-2012
S-352C	BRIDGE RAILING, GALVANIZED STEEL TUBING/CONCRETE COMBINATION	08-22-2012

STRUCTURES DETAILS

SD-501.00	CONCRETE DETAILS AND NOTES	04-07-2010
SD-502.00	CONCRETE DETAILS AND NOTES	05-04-2010
SD-516.10	BRIDGE JOINT ASPHALTIC PLUG	04-07-2010
SD-601.00	STRUCTURAL STEEL DETAILS & NOTES	05-04-2010
SD-602.00	STRUCTURAL STEEL PLATE GIRDER DETAILS AND NOTES	04-02-2011

AS BUILT "REBAR" DETAIL

LEVEL I	LEVEL II	LEVEL III
TYPE:	TYPE:	TYPE:
GRADE:	GRADE:	GRADE:

TRAFFIC DATA

YEAR	ADT	DHV	% D	% T	ADTT
2013	2700	440	53	9	240
2033	2900	480	53	14.5	410

20 year ESAL for flexible pavement from 2013 to 2033 : 1219000
40 year ESAL for flexible pavement from 2013 to 2053 : 2834000
Design Speed : 30 mph

FINAL HYDRAULIC REPORT

HYDROLOGIC DATA

Date: March 2012

DRAINAGE AREA : 33.4 sq. mi.
CHARACTER OF TERRAIN : Hilly to mountainous, mostly forested with some open areas
STREAM CHARACTERISTICS : Sinuous and alluvial. Currently flood damaged and unstable.
NATURE OF STREAMBED : Mostly cobbles with some gravel and boulders

PEAK FLOW DATA

Q 2.33 =	2,400 cfs	Q 50 =	9,300 cfs
Q 10 =	5,100 cfs	Q 100 =	11,500 cfs
Q 25 =	7,200 cfs	Q 500 =	19,000 cfs

DATE OF FLOOD OF RECORD: Unknown
ESTIMATED DISCHARGE: Unknown
WATER SURFACE ELEV.: Unknown
NATURAL STREAM VELOCITY : @ Q50 = 18.1 fps
ICE CONDITIONS : Moderate
DEBRIS: Moderate
DOES THE STREAM REACH MAXIMUM HIGHWATER ELEV. RAPIDLY? Yes
IS ORDINARY RISE RAPID? Yes
IS STAGE AFFECTED BY UPSTREAM OR DOWNSTREAM CONDITIONS? No
IF YES, DESCRIBE:

WATERSHED STORAGE: < 1%
HEADWATERS:
UNIFORM: X
IMMEDIATELY ABOVE SITE:

EXISTING STRUCTURE INFORMATION

STRUCTURE TYPE: Two span steel beam bridge with concrete deck. Removed in 2011.
YEAR BUILT: Built in 1936 and widened in 1979
CLEAR SPAN(NORMAL TO STREAM): Two 55' clear spans = 110' total clear span
VERTICAL CLEARANCE ABOVE STREAMBED: 14' maximun on upstream side
WATERWAY OF FULL OPENING: 1040 sq. ft.
DISPOSITION OF STRUCTURE: It has been removed.
TYPE OF MATERIAL UNDER SUBSTRUCTURE: See boring logs.

WATER SURFACE ELEVATIONS AT:

Q2.33 =	723.7'	VELOCITY =	9.9 fps
Q10 =	726.0'	"	13.9 fps
Q25 =	727.4'	"	14.0 fps
Q50 =	728.6'	"	15.2 fps
Q100 =	729.6'	"	16.3 fps

LONG TERM STREAMBED CHANGES: Up to 6' of channel degradation and scour from 1936 to 2007. Recent flooding changed the river and future changes are expected.

IS THE ROADWAY OVERTOPPED BELOW Q100: No
FREQUENCY: Above Q100
RELIEF ELEVATION: 729.5' within project survey limits
DISCHARGE OVER ROAD @Q100: None

UPSTREAM STRUCTURE

TOWN:	Jamaica	DISTANCE:	4500'
HIGHWAY # :	TH 1	STRUCTURE #:	22
CLEAR SPAN:	52'	CLEAR HEIGHT:	16'
YEAR BUILT:	1939	FULL WATERWAY:	
STRUCTURE TYPE:	Single span bridge		

DOWNSTREAM STRUCTURE

TOWN:	Jamaica	DISTANCE:	1700'
HIGHWAY # :	TH 19	STRUCTURE #:	24
CLEAR SPAN:	58' +58' = 116' total	CLEAR HEIGHT:	14'
YEAR BUILT:	1939	FULL WATERWAY:	
STRUCTURE TYPE:	Two span bridge		

LRFR LOAD RATING FACTORS

LOADING LEVELS	TRUCK						
	H-20	HL-93	3S2	6 AXLE	3A. STR.	4A. STR.	5A. SEMI
TONNAGE	20	36	36	66	30	34.5	38
INVENTORY	2.95	1.2					
POSTING							
OPERATING	3.82	1.56	2.57	1.54	2.64	2.32	2.32
COMMENTS:							

PILE DRIVING AND TESTING REQUIREMENTS

1. NOMINAL PILE DRIVING CAPACITY — Rndr: SEE GEN. NOTES
2. PILE TEST RESISTANCE FACTOR — ϕ: 0.65
3. MAXIMUM PILE TIP ELEVATION — SEE GEN. NOTES
4. A MINIMUM OF 3 DYNAMIC TESTS SHALL BE PERFORMED DURING INSTALLATION. NO LESS THAN 1 TEST SHALL BE PERFORMED AT EACH ABUTMENT. THE REMAINING PILES SHALL BE CALIBRATED BY WAVE EQUATION ANALYSIS.

PROPOSED STRUCTURE

STRUCTURE TYPE: Single span curved plate girder bridge

CLEAR SPAN(NORMAL TO STREAM): 123'
VERTICAL CLEARANCE ABOVE STREAMBED: 14'
WATERWAY OF FULL OPENING: 1100 sq. ft.

WATER SURFACE ELEVATIONS AT:

Q2.33 =	723.7'	VELOCITY=	9.8 fps
Q10 =	726.0'	"	12.5 fps
Q25 =	727.4'	"	13.8 fps
Q50 =	728.6'	"	16.9 fps
Q100 =	729.6'	"	16.2 fps

IS THE ROADWAY OVERTOPPED BELOW Q100: No
FREQUENCY: Above Q100
RELIEF ELEVATION: 729.5' within project survey limits
DISCHARGE OVER ROAD @Q100: None

AVERAGE LOW ELEVATION OF SUPERSTRUCTURE: 729.6'
VERTICAL CLEARANCE: @ Q50 = 1.0'

SCOUR: 3' of contraction scour up to Q100 and Q500. An additional 5' of long term stream degradation estimated, for a total of 8' of channel scour. Other flood related changes possible.
REQUIRED CHANNEL PROTECTION: Stone Fill, Type IV

PERMIT INFORMATION

		DEPTH OR ELEVATION:
AVERAGE DAILY FLOW:	70 cfs	
ORDINARY LOW WATER:	30 cfs	Depth = 1'
ORDINARY HIGH WATER:	1030 cfs	Depth = 4'

TEMPORARY BRIDGE REQUIREMENTS

STRUCTURE TYPE: Temporary bridge already in place
CLEAR SPAN (NORMAL TO STREAM):
VERTICAL CLEARANCE ABOVE STREAMBED:
WATERWAY AREA OF FULL OPENING:

ADDITIONAL INFORMATION

Existing bridge hydraulics based on the former bridge geometry placed on new post-flood survey. That may not represent the actual pre-flood existing bridge conditions, but it provides an accurate comparison between the former bridge and proposed bridge.

TEMP. IN PLACE

DESIGN VALUES

1. DESIGN LIVE LOAD		HL-93
2. FUTURE PAVEMENT	d_p:	3.0 INCH
3. DESIGN SPAN	L:	130.00 FT
4. MIN. MID-SPAN POS. CAMBER @ RELEASE (PRESTRESSED UNITS)	Δ:	- - -
5. PRESTRESSING STRAND	f_y:	- - -
6. PRESTRESSED CONCRETE STRENGTH	f'_c:	6.0 KSI
7. PRESTRESSED CONCRETE RELEASE STRENGTH	f'_{ci}:	5.0 KSI
8. CONCRETE, HIGH PERFORMANCE CLASS AA	f'_c:	4.0 KSI
9. CONCRETE, HIGH PERFORMANCE CLASS A	f'_c:	4.0 KSI
10. CONCRETE, HIGH PERFORMANCE CLASS B	f'_c:	3.5 KSI
11. CONCRETE, CLASS C	f'_c:	3.0 KSI
12. REINFORCING STEEL	f_y:	60 KSI
13. STRUCTURAL STEEL AASHTO M270 (WEATHERING)	f_y:	50 KSI
14. SOIL UNIT WEIGHT	γ:	0.140 KCF
15. NOMINAL BEARING RESISTANCE OF SOIL	q_n:	4.0 KSF
16. SOIL BEARING RESISTANCE FACTOR (REFER TO AASHTO LRFD)	ϕ:	- - -
17. NOMINAL BEARING RESISTANCE OF ROCK	q_n:	10.0 KSF
18. ROCK BEARING RESISTANCE FACTOR (REFER TO AASHTO LRFD)	ϕ:	- - -
19. NOMINAL AXIAL PILE RESISTANCE	q_p:	SEE GEN. NOTES
20. PILE YIELD STRENGTH ASTM A572	f_y:	50 KSI
21. PILE SIZE		HP 12X 84
22. EST. PILE LENGTH	L_p:	
23. PILE RESISTANCE FACTOR	ϕ:	- - -
24. LATERAL PILE DEFLECTION	Δ:	- - -
25. BASIC WIND SPEED	V_{3s}:	- - -
26. MINIMUM GROUND SNOW LOAD	p_g:	- - -
27. SEISMIC DATA — PGA : - - -	S_s:	- - -
	S_1:	- - -

PROJECT NAME: **JAMAICA**
PROJECT NUMBER: **ER-BRF 015-1(23)**

FILE NAME:	s11b316pi.xls	PLOT DATE:	1/3/2013
PROJECT LEADER:	K. HIGGINS	DRAWN BY:	K. FRIEDLAND
DESIGNED BY:	G. LAROCHE	CHECKED BY:	J. SALVATORI
PRELIMINARY INFORMATION SHEET (BRIDGE)		SHEET 2	OF 82

STATE OF VERMONT
AGENCY OF TRANSPORTATION

PRELIMINARY INFORMATION SHEET (CULVERT)

Version 11.06.15

LRFD

INDEX OF SHEETS

PLAN SHEETS

STANDARDS LIST

FINAL HYDRAULIC REPORT

HYDROLOGIC DATA

Date: June 2012

DRAINAGE AREA : 1.9 sq. mi.
CHARACTER OF TERRAIN : Hilly to mountainous, mostly forested, drainage basin
STREAM CHARACTERISTICS : Small perenial stream. Sinuous and semi-alluvial.
NATURE OF STREAMBED : Mostly cobbles with some gravel and boulders

PEAK FLOW DATA

Q 2.33 =	150 cfs	Q 50 =	550 cfs
Q 10 =	340 cfs	Q 100 =	650 cfs
Q 25 =	450 cfs	Q 500 =	900 cfs

DATE OF FLOOD OF RECORD : unknown
ESTIMATED DISCHARGE: unknown
WATER SURFACE ELEV.: unknown
NATURAL STREAM VELOCITY : @ Q50 = 13.5 fps
ICE CONDITIONS : Moderate
DEBRIS: Moderate
DOES THE STREAM REACH MAXIMUM HIGHWATER ELEV. RAPIDLY? Yes
IS ORDINARY RISE RAPID? Yes
IS STAGE AFFECTED BY UPSTREAM OR DOWNSTREAM CONDITIONS? No
IF YES, DESCRIBE:

WATERSHED STORAGE: < 1%
HEADWATERS:
UNIFORM: X
IMMEDIATELY ABOVE SITE:

EXISTING STRUCTURE INFORMATION

STRUCTURE TYPE: Concrete box
YEAR BUILT: 1936
CLEAR SPAN(NORMAL TO STREAM): 7'
VERTICAL CLEARANCE ABOVE STREAMBED: 7'
WATERWAY OF FULL OPENING: 49 sq. ft.
DISPOSITION OF STRUCTURE: Remove
TYPE OF MATERIAL UNDER SUBSTRUCTURE: unknown

WATER SURFACE ELEVATIONS AT:

Q2.33 =	728.1'	VELOCITY =	14.6 fps
Q10 =	731.0'	"	17.5 fps
Q25 =	732.7'	"	18.6 fps
Q50 =	734.3'	"	19.3 fps
Q100 =	734.9'	"	19.6 fps

LONG TERM STREAMBED CHANGES: None known

IS THE ROADWAY OVERTOPPED BELOW Q100: Water overtops drive before road
FREQUENCY: Fire department drive overtopped at slightly less than Q50.
RELIEF ELEVATION: 734.0'
DISCHARGE OVER ROAD @Q100: 76 cfs over drive at Q100

UPSTREAM STRUCTURE

TOWN:	Jamaica	DISTANCE:	400'
HIGHWAY # :	TH 52	STRUCTURE #:	18
CLEAR SPAN:	11'	CLEAR HEIGHT:	5'
YEAR BUILT:	unknown	FULL WATERWAY:	55 sq. ft.
STRUCTURE TYPE:	Bridge		

DOWNSTREAM STRUCTURE

TOWN:	N.A. - confluence with Ball Mountain Brook	DISTANCE:	< 100'
HIGHWAY # :		STRUCTURE #:	
CLEAR SPAN:		CLEAR HEIGHT:	
YEAR BUILT:		FULL WATERWAY:	
STRUCTURE TYPE:			

PROPOSED STRUCTURE

STRUCTURE TYPE: Precast concrete box with the invert buried 3' below channel bottom.

CLEAR SPAN(NORMAL TO STREAM): 16'
VERTICAL CLEARANCE ABOVE STREAMBED: 5'
WATERWAY OF FULL OPENING: 80 sq. ft.

WATER SURFACE ELEVATIONS AT:

Q2.33 =	726.1' (726.1')*	VELOCITY=	8.6 fps (8.6')*
Q10 =	727.6' (727.6')	"	12.0 fps (8.6 fps)
Q25 =	728.3' (728.3')	"	13.3 fps (9.7 fps)
Q50 =	729.0' (730.1')	"	14.5 fps (6.9 fps)
Q100 =	729.8' (731.7')	"	15.4 fps (8.1 fps)

IS THE ROADWAY OVERTOPPED BELOW Q100: No
FREQUENCY: Above Q100
RELIEF ELEVATION: 734.3' over fire department drive
DISCHARGE OVER ROAD @Q100: No overtopping of road or drive at Q100

AVERAGE LOW ELEVATION OF SUPERSTRUCTURE: Top of box = 729.1' at inlet
VERTICAL CLEARANCE: @ Q50 = 0.1' at inlet (Inlet submerged with Q50 tailwater)

SCOUR: Not applicable for a box

REQUIRED CHANNEL PROTECTION: Stone Fill, Type III at inlet and Type IV at outlet

PERMIT INFORMATION

AVERAGE DAILY FLOW:	4 cfs	DEPTH OR ELEVATION:
ORDINARY LOW WATER:	2 cfs	Depth = < 0.5'
ORDINARY HIGH WATER:	65 cfs	Depth = 1.0'

TEMPORARY BRIDGE REQUIREMENTS

STRUCTURE TYPE: No temporary bridge needed.
CLEAR SPAN (NORMAL TO STREAM):
VERTICAL CLEARANCE ABOVE STREAMBED:
WATERWAY AREA OF FULL OPENING:

ADDITIONAL INFORMATION

* Hydraulics of the new box is affected by high tailwater on Ball Mountain Brook. Water surface elevations and velocities are first listed for conditions without Ball Mountain Brook tailwater, followed by values based on equal frequency floods on both streams in ( ).
The existing box is in inlet control, so is not affected by Ball Mountain Brook tailwater.

TEMP. IN PLACE

DESIGN VALUES

1.	DESIGN LIVE LOAD		HL-93
2.	FUTURE PAVEMENT	d_p:	3.0 INCH
3.	CULVERT OPENING	D:	16.00 FT
4.	MIN. MID-SPAN POS. CAMBER @ RELEASE (PRESTRESSED UNITS)	Δ:	- - -
5.	PRESTRESSING STRAND	f_y:	- - -
6.	PRESTRESSED CONCRETE STRENGTH	f'_c:	- - -
7.	PRESTRESSED CONCRETE RELEASE STRENGTH	f'_{ci}:	- - -
8.	CONCRETE, HIGH PERFORMANCE CLASS AA	f'_c:	- - -
9.	CONCRETE, HIGH PERFORMANCE CLASS A	f'_c:	- - -
10.	CONCRETE, HIGH PERFORMANCE CLASS B	f'_c:	- - -
11.	CONCRETE, CLASS C	f'_c:	- - -
12.	REINFORCING STEEL	f_y:	60 KSI
13.	STRUCTURAL STEEL AASHTO M270	f_y:	- - -
14.	SOIL UNIT WEIGHT	γ:	0.140 KCF
15.	NOMINAL BEARING RESISTANCE OF SOIL	q_n:	4.0 KSF
16.	SOIL BEARING RESISTANCE FACTOR (REFER TO AASHTO LRFD)	ϕ:	- - -
17.	NOMINAL BEARING RESISTANCE OF ROCK	q_n:	10.0 KSF
18.	ROCK BEARING RESISTANCE FACTOR (REFER TO AASHTO LRFD)	ϕ:	- - -
19.	NOMINAL AXIAL PILE RESISTANCE	q_p:	- - -
20.	PILE YIELD STRENGTH ASTM A572	f_y:	- - -
21.	PILE SIZE		- - -
22.	EST. PILE LENGTH	L_p:	
23.	PILE RESISTANCE FACTOR	ϕ:	- - -
24.	LATERAL PILE DEFLECTION	Δ:	- - -
25.	BASIC WIND SPEED	V_{3s}:	- - -
26.	MINIMUM GROUND SNOW LOAD	p_g:	- - -
27.	SEISMIC DATA	PGA: - - -	S_s: - - -
			S_1: - - -

LRFR LOAD RATING FACTORS

LOADING LEVELS	TRUCK						
	H-20	HL-93	3S2	6 AXLE	3A. STR.	4A. STR.	5A. SEMI
TONNAGE	20	36	36	66	30	34.5	38
INVENTORY							
POSTING							
OPERATING	TABLE TO BE COMPLETED BY CONTRACTOR'S DESIGNER						
COMMENTS:							

CULVERT DESIGN CRITERIA

1. PROPOSED CULVERT IS A PRECAST CONCRETE STRUCTURE (16'-0" X 8'-0" X 85'-0" BOX).
2. CULVERT ENDS ARE SKEWED BY AN ANGLE OF VARIES°
3. CULVERT WILL BE SET AT A SLOPE OF 12.00 IN. ON 26 FT.
4. CULVERT WILL NOT REQUIRE FISH PASSAGE ACCOMMODATIONS
5. CULVERT CONSTRUCTION WILL NOT REQUIRE A TEMPORARY PIPE

TRAFFIC DATA

YEAR	ADT	DHV	% D	% T	ADTT
0	0	0	0	0	0
XXXX	0	0	0	0	0

~~20 year ESAL for flexible pavement from XXXX to XXXX : 0~~
~~40 year ESAL for flexible pavement from XXXX to XXXX : 0~~
~~Design Speed : 0 mph~~

PROJECT NAME: **JAMAICA**
PROJECT NUMBER: **ER-BRF 015-1(23)**

FILE NAME:	s11b316pi_BoxCulvert.xls	PLOT DATE:	11/30/2012
PROJECT LEADER:	K. HIGGINS	DRAWN BY:	K. FRIEDLAND
DESIGNED BY:	G. LAROCHE	CHECKED BY:	J. SALVATORI
PRELIMINARY INFO SHEET (BOX CULVERT)		SHEET 3	OF 82

GENERAL

1. ALL MATERIALS AND CONSTRUCTION SHALL CONFORM TO THE STATE OF VERMONT AGENCY OF TRANSPORTATION 2011 STANDARD SPECIFICATIONS FOR CONSTRUCTION, AND THE 2012 AASHTO LRFD BRIDGE DESIGN SPECIFICATIONS, AND THEIR LATEST REVISIONS.

2. A TEMPORARY BRIDGE WAS PLACED UPSTREAM OF THE EXISTING, FAILED STRUCTURE. REMOVAL OF THIS TEMPORARY BRIDGE AND ITS APPROACHES SHALL BE PAID FOR UNDER ITEM 900.645 "SPECIAL PROVISION (REMOVAL OF TEMPORARY BRIDGE AND APPROACHES)". THE TEMPORARY BRIDGE IS THE PROPERTY OF VTRANS AND SHALL BE RETURNED TO THE VTRANS MAINTENANCE FACILITY IN SPRINGFIELD, VT. CONTACT HOBERT GATES AT (802) 524-5926 TO MAKE NECESSARY ARRANGEMENTS AS PER THE SPECIAL PROVISIONS.

3. DURING CONSTRUCTION, TRAFFIC SHALL BE MAINTAINED ON AN EXISTING TWO-WAY TEMPORARY BRIDGE LOCATED UPSTREAM OF THE EXISTING STRUCTURE. ALL WORK ASSOCIATED WITH THE MAINTENANCE OF THE EXISTING TEMPORARY BRIDGE AND ITS APPROACHES, INCLUDING TEMPORARY TRAFFIC BARRIER, ENERGY ABSORPTION ATTENUATORS, PAVEMENT AND PAVEMENT MARKINGS WILL BE INCLUDED IN THE UNIT PRICE FOR CONTRACT ITEM 527.10, "MAINTENANCE OF STRUCTURES AND APPROACHES".

4. PAYMENT FOR ALL NEW ON AND OFF-PROJECT CONSTRUCTION SIGNING AND TRAFFIC CONTROL DEVICES, INCLUDING DRUMS AND BARRICADES, WILL BE MADE UNDER CONTRACT ITEM 900.645, "SPECIAL PROVISION (TRAFFIC CONTROL, ALL-INCLUSIVE)".

5. FULL ACCESS TO ALL SIDE ROADS AND DRIVES WITHIN THE PROJECT LIMITS SHALL BE MAINTAINED AT ALL TIMES. THIS WORK SHALL BE CONSIDERED INCIDENTAL TO ITEM 900.645 "SPECIAL PROVISION (TRAFFIC CONTROL, ALL-INCLUSIVE)".

6. ALL DIMENSIONS SHOWN IN THE PLANS ARE HORIZONTAL OR VERTICAL AND ARE GIVEN AT 68 DEGREES FAHRENHEIT, UNLESS NOTED OTHERWISE.

7. THE CONTRACTOR SHALL INSTALL TWO GRANITE PLAQUES SUPPLIED BY THE STATE IN LOCATIONS AS SHOWN ON THE PLANS. THE PLAQUES SHALL BE INSTALLED TO THE SATISFACTION OF THE TOWN OF JAMAICA AND THE ENGINEER. INSTALLATION OF THE PLAQUES SHALL BE INCIDENTAL TO THE BRIDGE RAIL CONCRETE.

8. THE CONTRACTOR SHOULD NOTE THAT THE EXISTING TEMPORARY BRIDGE APPROACH AND APPROACH RAIL CONFLICTS WITH THE LOCATION OF WINGWALL #1. IT IS THE CONTRACTOR'S RESPONSIBILITY TO DEVELOP A PLAN, ACCEPTABLE TO THE ENGINEER, FOR THE CONSTRUCTION OF WINGWALL #1 IN ITS PROPOSED LOCATION AND DIMENSION. THIS PLAN SHALL BE SUBMITTED TO THE ENGINEER AT THE PRECONSTRUCTION MEETING. THE DEVELOPMENT OF THIS PLAN, ALL MATERIALS, LABOR, ETC. REQUIRED TO CONSTRUCT WINGWALL #1 AS PER THE CONTRACTOR'S PLAN WILL BE CONSIDERED INCLUDED IN THE BID PRICE FOR ITEM 501.33 "CONCRETE, HIGH PERFORMANCE, CLASS A"; AND ITEM 501.34 "CONCRETE, HIGH PERFORMANCE CLASS B." MECHANICAL SPLICE CONNECTORS ARE SHOWN IN THE DETAILS FOR WINGWALL #1 SHOULD THE CONTRACTOR CHOOSE TO PHASE ITS CONSTRUCTION. TEMPORARY TRAFFIC WILL BE ALLOWED ON THE NEW BRIDGE ONCE THE DECK HAS CURED AND PROVISIONS HAVE BEEN MADE FOR SAFE VEHICULAR TRAVEL. THE APPROACH SLAB AT ABUTMENT #1 NEED NOT BE IN PLACE FOR TEMPORARY TRAFFIC.

EARTHWORK AND RELATED ITEMS

9. THE "STONE FILL, TYPE IV" UNDER THE BRIDGE AS SHOWN IN THE PLANS SHALL BE PLACED BEFORE THE NEW STEEL GIRDERS ARE SET.

STRUCTURAL STEEL

10. STRUCTURAL STEEL MEMBERS DESIGNATED "CVN" IN THE PLANS SHALL BE CHARPY V-NOTCH TESTED IN ACCORDANCE WITH SUBSECTION 714.01.

11. ANY HOLES IN THE WEBS OF FASCIA GIRDERS NOT OTHERWISE FILLED SHALL BE FILLED WITH BUTTON HEAD BOLTS. THESE BOLTS SHALL BE TIGHTENED IN ACCORDANCE WITH SUBSECTIONS 506.19.

12. ANY CONNECTIONS NOT DETAILED ON THE PLANS SHALL BE DETAILED BY THE FABRICATOR AND SUBMITTED TO THE STRUCTURES ENGINEER FOR APPROVAL.

13. ALL WELDING SHALL CONFORM TO THE PROVISIONS OF SUBSECTION 506.10.

14. ALL FIELD CONNECTIONS SHALL BE MADE WITH 7/8" DIAMETER HIGH STRENGTH BOLTS IN 15/16" DIAMETER HOLES, PER SECTION 506 UNLESS OTHERWISE NOTED.

15. FLEMING BRACKETS OR SIMILAR FALSE WORK SHALL BE PLACED AT A MAXIMUM SPACING OF 4 FEET. THE BRACKETS SHALL BEAR NEAR THE BOTTOM FLANGE AND IN NO CASE SHALL THEY BEAR ABOVE THE BOTTOM QUARTER WEB.

16. AFTER THE GIRDERS HAVE BEEN ERECTED, ELEVATIONS SHALL BE TAKEN ALONG THE TOP OF THE GIRDERS AS DIRECTED BY THE RESIDENT ENGINEER, FOR USE IN DETERMINING THE FINISHED GRADE.

17. GIRDER WEBS AND CROSS FRAMES SHALL BE PLUMB IN FINAL POSITION.

PILES

18. THE PILES SHALL BE HP 12 X 84.

19. IF NO BEDROCK IS ENCOUNTERED, THE PILES SHALL BE DRIVEN TO A NOMINAL PILE DRIVING RESISTANCE OF 380 KIPS WITH A MINIMUM DEPTH OF 20 FEET BELOW THE BOTTOM OF THE PILE CAP AND THEREFORE NO PRE-BORING IS REQUIRED. IF BEDROCK IS ENCOUNTERED AT DEPTHS SHALLOWER THAN 20 FEET BELOW THE BOTTOM OF PILE CAP, THE PILE LOCATIONS SHALL BE PRE-BORED WITH A PENETRATION OF 3 FEET INTO BEDROCK. IF BEDROCK IS ENCOUNTERED SHALLOWER THAN 5 FEET, PRE-BORING TO A MINIMUM DEPTH OF 8 FEET BELOW THE PILE CAP IS REQUIRED WHILE ONLY BACKFILLING THE BOTTOM THREE FEET WITH CONCRETE.

20. ALL PRE-BORED HOLES SHALL BE 24 INCHES IN DIAMETER. THE BOTTOM THREE (3) FEET IN BEDROCK SHALL BE FILLED WITH CONCRETE AFTER PLACEMENT OF THE PILE. SAND SHALL BE USED TO BACKFILL THE ANNULAR SPACE ABOVE THE CONCRETE TO THE BOTTOM OF GRANULAR BACKFILL FOR STRUCTURES. REFER TO THE SPECIAL PROVISIONS FOR ADDITIONAL INFORMATION.

21. TO PREVENT DAMAGE TO THE PILES, PILE SHOES ARE REQUIRED FOR DRIVEN PILES AND SHALL CONFORM TO SUBSECTION 505.04 (f).

22. PILE TESTING AND SEQUENCE
    A. A MINIMUM OF 3 DYNAMIC TESTS SHALL BE PERFORMED DURING INSTALLATION. NO LESS THAN 1 TEST SHALL BE PERFORMED AT EACH ABUTMENT. THE REMAINING PILES SHOULD BE CALIBRATED BY WAVE EQUATION ANALYSIS.
    B. ABUTMENT PILES SHALL BE DRIVEN STARTING AT THE CENTERLINE OF VT 30 AND WORKING OUTWARD SO THAT THE EXTERIOR PILES ARE DRIVEN LAST.

23. FOR ESTIMATING PURPOSES, THE PILE TIP ELEVATIONS WERE ASSUMED AS SHOWN ON THE BORING LOGS. THE ACTUAL IN PLACE LENGTHS MAY VARY.

24. THE TOPS OF THE PILES AFTER DRIVING SHALL NOT VARY FROM THE POSITION SHOWN ON THE PLANS BY MORE THAN 3 INCHES. THE PILE ORIENTATION SHALL NOT VARY BY MORE THAN 5 DEGREES. THE CONTRACTOR SHALL DEMONSTRATE TO THE SATISFACTION OF THE ENGINEER HOW THE TOLERANCES WILL BE MET. THESE MEASURES SHALL BE DEMONSTRATED IN A SUBMITTAL TO BE ACCEPTED BEFORE PILE DRIVING COMMENCES.

25. PRE-BORING AT ABUTMENT 1 PILE LOCATIONS IS OPTIONAL, PROVIDED ALL PILE DRIVING REQUIREMENTS CAN BE MET. PRE-BORING AT ABUTMENT 2 PILE LOCATIONS IS REQUIRED. PAYMENT SHALL BE PAID FOR UNDER ITEM 900.640 "SPECIAL PROVISION (PRE-EXCAVATION OF INTEGRAL ABUTMENTS PILES, EARTH)" OR ITEM 900.640 "SPECIAL PROVISION (PRE-EXCAVATION OF INTEGRAL ABUTMENTS PILES, ROCK)".

CONCRETE

26. THE DECK, BRIDGE RAIL, ABUTMENTS & WINGWALLS ABOVE BRIDGE SEAT SHALL BE CONCRETE, HIGH PERFORMANCE CLASS A.

27. ALL OTHER SUBSTRUCTURE CONCRETE SHALL BE CONCRETE, HIGH PERFORMANCE CLASS B.

28. CONCRETE PORTIONS OF ABUTMENTS AND WINGWALLS ABOVE ADJACENT BRIDGE SEAT ELEVATIONS SHALL NOT BE PLACED UNTIL FINISH GRADES HAVE BEEN DETERMINED BY THE RESIDENT ENGINEER.

29. IN ACCORDANCE WITH SUBSECTION 506.23(A) AND AS DIRECTED BY THE RESIDENT ENGINEER, THE CONTRACTOR SHALL TAKE MEASURES NECESSARY TO PROTECT ALL SUBSTRUCTURE CONCRETE FROM STAINING DUE TO OXIDE FORMATION ON THE STRUCTURAL STEEL PRIOR TO PLACEMENT OF THE DECK. THESE MEASURES WILL NOT BE PAID FOR SEPARATELY BUT SHALL BE CONSIDERED INCIDENTAL TO ITEM 501.34, "CONCRETE, HIGH PERFORMANCE CLASS B". ANY SUCH STAINING THAT OCCURS PRIOR TO DECK PLACEMENT SHALL BE REMOVED AT NO ADDITIONAL COST TO THE STATE.

30. THE DECK IS TO BE POURED IN ONE CONTINUOUS POUR WITH A MAXIMUM DURATION OF EIGHT HOURS. IF CIRCUMSTANCES BEYOND THE CONTRACTOR'S CONTROL PREVENT THIS FROM BEING ACCOMPLISHED, A TRANSVERSE CONSTRUCTION JOINT SHALL BE USED BETWEEN ADJACENT POURS. A MINIMUM 96 HOUR DELAY BETWEEN ADJACENT POURS SHALL BE OBSERVED.

31. ALL EXPOSED EDGES OF CONCRETE SHALL BE CHAMFERED 1 INCH X 1 INCH.

32. ITEM 514.10 "WATER REPELLENT, SILANE", SHALL BE APPLIED TO ALL EXPOSED CONCRETE SURFACES, EXCEPT THE UNDERSIDE OF THE DECK BETWEEN DRIP NOTCHES.

33. JOINTS AND SCORE MARKS IN CONCRETE SHALL BE CONSTRUCTED AS SHOWN IN THE PLANS OR AS DIRECTED BY THE RESIDENT ENGINEER.

34. THE KEY IN CONCRETE CONSTRUCTION JOINTS SHALL BE MONOLITHIC AND CONTINUOUS FOR THE FULL LENGTH OF THE JOINT. UPWARD KEYS SHALL BE PLACED INTEGRALLY WITH THE CONCRETE BELOW THE JOINT.

35. REINFORCING STEEL ABOVE THE BRIDGE SEATS IN THE ABUTMENTS, BRIDGE RAIL, AND APPROACH SLABS SHALL BE LEVEL II REINFORCING STEEL IN ACCORDANCE WITH SECTION 507.

36. REINFORCING STEEL BELOW THE BRIDGE SEATS IN THE ABUTMENTS SHALL BE LEVEL I REINFORCING STEEL IN ACCORDANCE WITH SECTION 507.

37. MINIMUM COVER FOR REINFORCING STEEL SHALL BE AS INDICATED IN THE PLANS.

38. REINFORCING STEEL PLACEMENT TOLERANCES SHALL BE:
    A. SPACING: +/- 1 INCH
    B. CLEARANCE: +/- 1/4 INCH

PRECAST CONCRETE STRUCTURE

39. DESIGN CRITERIA:
    A. SOIL UNIT WEIGHT = 140 PCF
    B. DESIGN LIVE LOAD = HL-93
    C. NOMINAL BEARING RESISTANCE = 6.7 KSF
    D. BEARING RESISTANCE FACTOR = 0.45
    E. DESIGN FILL OVER BOX = 3 FEET
    F. CONCRETE COMPRESSIVE STRENGTH = SEE SUBSECTION 540.05(e)

40. ALL CONCRETE SHALL BE PRECAST. ITEM 540.10 "PRECAST CONCRETE STRUCTURE" INCLUDES ALL BOX SEGMENTS, RETENTION SILLS, HEADWALLS, CUTOFF WALLS AND WINGWALLS. ALL CONNECTIONS SHALL BE DESIGNED BY THE FABRICATOR AND SHALL BE CONSIDERED INCIDENTAL TO ITEM 540.10.

41. THE PRECAST BOX SECTIONS ARE SHOWN FOR REFERENCE ONLY. THE ACTUAL DIMENSIONS AND SHAPE WILL BE DEPENDENT ON THE FABRICATOR. THE MINIMUM INSIDE DIMENSIONS SHALL BE 8'-0" IN HEIGHT AND 16'-0" IN WIDTH. THE OVERALL LENGTH OF THE BOX SHALL BE 85'-0'' ALONG THE STREAMBED GRADE. THE EXPOSED ENDS OF THE FIRST AND LAST UNITS SHALL BE VERTICAL.

42. THE EXTERIOR (TOP AND SIDES) OF ALL CONCRETE BOX JOINTS ALONG WITH ALL LIFTING HOLES SHALL BE FILLED WITH MORTAR TYPE IV AFTER BEING SET IN THEIR FINAL POSITION. THIS WORK WILL BE INCLUDED IN THE UNIT PRICE BID FOR ITEM 540.10.

43. MEMBRANE WATERPROOFING SHALL BE APPLIED TO THE ENTIRE TOP OF THE CONCRETE BOX. A TWO (2) FOOT WIDE STRIP OF MEMBRANE SHALL BE PLACED AT EACH VERTICAL JOINT (SIDES). MEMBRANE SHALL BE CENTERED ON THE JOINT AND COVER THE FULL HEIGHT. THE SIDES SHALL BE COVERED PRIOR TO THE TOP. ANY OVERLAPPING OF MEMBRANE SHALL BE DONE IN A SHINGLE TYPE STYLE TO SHED WATER AND SHALL OVERLAP A MINIMUM OF ONE FOOT. PAYMENT FOR MEMBRANE WILL BE INCLUDED IN THE UNIT PRICE BID FOR CONTRACT ITEM 540.10.

44. THE CONTRACTOR SHALL CONSIDER THE PLACEMENT OF THE BOX CULVERT SECTIONS BEGINNING AT THE OUTLET AS TO MATCH THE WINGWALL ELEVATION TO THE FINISH GRADE OF THE ABUTMENT.

45. WATER REPELLENT, SILANE SHALL BE SHOP APPLIED TO ALL EXPOSED CONCRETE SURFACES OF THE PRECAST CONCRETE STRUCTURE. PAYMENT FOR SILANE WILL BE INCLUDED IN THE UNIT PRICE BID FOR CONTRACT ITEM 540.10.

46. REINFORCING STEEL FOR THE PRECAST WINGWALLS AND HEADWALLS SHALL BE LEVEL II REINFORCING STEEL IN ACCORDANCE WITH SECTION 507. ALL REMAINING REINFORCING STEEL SHALL BE LEVEL I REINFORCING STEEL IN ACCORDANCE WITH SECTION 507.

MISCELLANEOUS

47. AFTER REMOVAL OF THE TEMPORARY BRIDGE, THE CONTRACTOR SHALL CONTACT TODD MENEES AT 802-786-8921, FOR CONSULTATION REGARDING FINAL GRADING TO CHANNEL ON THE BECK WITH PROPERTY.

48. UTILITY RELOCATION SHALL BE COMPLETE WITHIN 28 DAYS OF THE COMPLETE REMOVAL OF THE TEMPORARY BRIDGE AND DETOUR. THE CONTRACTOR SHALL CONTACT THE RESPECTIVE UTILITY COMPANY PRIOR TO THE REMOVAL OF THE DETOUR. SEE UTILITY SPECIAL PROVISION FOR CONTACT INFORMATION.

49. AN URBAN SEED MIX SHALL BE USED WHEN RESEEDING THE AREA IMPACTED FROM REMOVAL OF THE TEMPORARY BRIDGE AND DETOUR.

50. THE REMOVAL OF THE PIPE UNDER THE EXISTING DETOUR SHALL BE INCIDENTAL TO CONTRACT ITEM 900.645 "SPECIAL PROVISION (REMOVAL OF TEMPORARY BRIDGE AND APPROACHES)".

51. THE REMOVAL OF THE WINGWALLS AND HEADWALLS FOR THE CONCRETE BOX THAT CROSSES UNDERNEATH VT ROUTE 30 SHALL BE PAID FOR UNDER ITEM 529.20 "PARTIAL REMOVAL OF STRUCTURE (7'-0" x 7'-0" x 90'-0" BOX).

52. ONCE THE NEW BOX CULVERT IS CONSTRUCTED, ITEM 541.45 "CONTROLLED DENSITY (FLOWABLE) FILL" SHALL BE USED TO FILL THE EXISTING BOX CULVERT THAT CROSSES UNDERNEATH VT ROUTE 30.

53. A PULL OFF SHALL BE CONSTRUCTED FROM FIRE DRIVE STA 20+38 - STA 21+42, AS SHOWN ON THE PLANS, TO ACCOMMODATE ACCESS TO A FUTURE DRY HYDRANT TO BE INSTALLED ALONG THE BANK OF BALL MOUNTAIN BROOK.

54. THE SEPTIC TANK RISER AT STATION 209+95.00 LT AND DRY WELL AT STATION 31+93.00 RIGHT SHALL NOT BE DISTURBED.

STATE OF VERMONT
AGENCY OF TRANSPORTATION

QUANTITY SHEET 1

SUMMARY OF ESTIMATED QUANTITIES					TOTALS		DESCRIPTIONS			
ROADWAY	CULVERT	EROSION CONTROL	TRAINING	BRIDGE	FULL C.E. ITEMS	GRAND TOTAL	FINAL	UNIT	ITEMS	ITEM NUMBER	ROUND
1						1		LS	CLEARING AND GRUBBING, INCLUDING INDIVIDUAL TREES AND STUMPS	201.10	
1600						1600		CY	COMMON EXCAVATION	203.15	
	1700			2300		4000		CY	UNCLASSIFIED CHANNEL EXCAVATION	203.27	
260						260		CY	SAND BORROW	203.31	
85						85		CY	TRENCH EXCAVATION OF EARTH	204.20	
15	1700			240		1955		CY	STRUCTURE EXCAVATION	204.25	
55	1075			200		1330		CY	GRANULAR BACKFILL FOR STRUCTURES	204.30	
450						450		SY	COLD PLANING, BITUMINOUS PAVEMENT	210.10	
									BEGIN OPTION AA		
1100						1100		CY	SUBBASE OF GRAVEL	301.15	
1100						1100		CY	SUBBASE OF CRUSHED GRAVEL, COARSE GRADED	301.25	
1100						1100		CY	SUBBASE OF DENSE GRADED CRUSHED STONE	301.35	
									END OPTION AA		
55						55		CY	AGGREGATE SURFACE COURSE	401.10	
12						12		CWT	EMULSIFIED ASPHALT	404.65	
1						1		LU	PRICE ADJUSTMENT, ASPHALT CEMENT (N.A.B.I.)	406.50	
				249		249		CY	CONCRETE, HIGH PERFORMANCE CLASS A	501.33	
				144		144		CY	CONCRETE, HIGH PERFORMANCE CLASS B	501.34	
				1		1		LS	FURNISHING EQUIPMENT FOR DRIVING PILING	504.10	
				333		333		LF	STEEL PILING, HP 12 X 84	505.165	
				3		3		EACH	DYNAMIC PILE LOADING TEST	505.45	
				300860		300860		LB	STRUCTURAL STEEL, CURVED PLATE GIRDER	506.56	
				20000		20000		LB	REINFORCING STEEL, LEVEL I	507.11	
				68000		68000		LB	REINFORCING STEEL, LEVEL II	507.12	
				1		1		LS	SHEAR CONNECTORS (2216-7/8" X 7")	508.15	
				15		15		GAL	WATER REPELLENT, SILANE	514.10	
				68		68		LF	BRIDGE EXPANSION JOINT, ASPHALTIC PLUG	516.10	
				500		500		SY	SHEET MEMBRANE WATERPROOFING, TORCH APPLIED	519.20	
				68		68		LF	JOINT SEALER, HOT POURED	524.11	
				265		265		LF	BRIDGE RAILING, GALVANIZED STEEL TUBING/CONCRETE COMBINATION	525.45	
1						1		LS	MAINTENANCE OF STRUCTURES AND APPROACHES	527.10	
	1					1		EACH	PARTIAL REMOVAL OF STRUCTURE (7'-0" x 7'-0" x 90'-0" BOX)	529.20	
				14		14		EACH	BEARING DEVICE ASSEMBLY, STEEL REINFORCED ELASTOMERIC PAD	531.17	
	1					1		LS	PRECAST CONCRETE STRUCTURE (16'-0" x 8'-0" x 85'-0" BOX)	540.10	
	200					200		CY	CONTROLLED DENSITY (FLOWABLE) FILL	541.45	
									BEGIN OPTION BB		
110						110		LF	24" CAAP .060 (2-2/3 X 1/2)	601.0225	
110						110		LF	24" PCCSP .064 (2-2/3 X 1/2)	601.0425	
110						110		LF	24" CPEP	601.0920	
									END OPTION BB		

DETAILED SUMMARY OF QUANTITIES		
QUANTITIES	UNIT	ITEMS
		EARTHWORK SUMMARY
1600	CY	COMMON EXCAVATION (1600 x 1.0)
1200	CY	UNCLASSIFIED CHANNEL EXCAVATION (4000 x 0.30)
586.5	CY	STRUCTURE EXCAVATION (1955 x 0.30)
3386.5	CY	SUB TOTAL
13.5	CY	ROUNDING
3400	CY	TOTAL FILL AVAILIBLE
1000	CY	TOTAL FILL REQUIRED
2400	CY	TOTAL WASTE
		SPECIAL PROVISION (BITUMINOUS CONCRETE PAVEMENT, SMALL QUANTITY)
510	TON	TYPE IVS
155	TON	TYPE IIS
665	TON	TOTAL SUPERPAVE

PROJECT NAME: JAMAICA
PROJECT NUMBER: ER-BRF 015-1(23)

FILE NAME: s11b316quantitysheet.dgn
PROJECT LEADER: K. HIGGINS
DESIGNED BY: G. LAROCHE
QUANTITY SHEET 1

PLOT DATE: 14-DEC-2012
DRAWN BY: G. LAROCHE
CHECKED BY: K. FRIEDLAND
SHEET 5 OF 82

STATE OF VERMONT
AGENCY OF TRANSPORTATION

QUANTITY SHEET 2

SUMMARY OF ESTIMATED QUANTITIES									TOTALS		DESCRIPTIONS			
	ROADWAY	CULVERT	EROSION CONTROL	TRAINING	BRIDGE	FULL C.E. ITEMS	GRAND TOTAL	FINAL	UNIT	ITEMS	ITEM NUMBER	ROUND
	1						1		EACH	PRECAST REINFORCED CONCRETE DROP INLET WITH CAST IRON GRATE	604.18	
	1						1		EACH	CHANGING ELEVATION OF DROP INLETS, CATCH BASINS, OR MANHOLES	604.40	
			10				10		HR	ALL PURPOSE EXCAVATOR RENTAL, TYPE I	608.25	
			1				1		TON	DUST AND ICE CONTROL WITH CALCIUM CHLORIDE	609.15	
	45						45		CY	STONE FILL, TYPE II	613.11	
		1100					1100		CY	STONE FILL, TYPE III	613.12	
					2550		2550		CY	STONE FILL, TYPE IV	613.13	
	195						195		LF	CAST-IN-PLACE CONCRETE CURB, TYPE B	616.28	
	120						120		SY	PORTLAND CEMENT CONCRETE SIDEWALK, 5 INCH	618.10	
	8						8		SF	DETECTABLE WARNING SURFACE	618.30	
	5						5		EACH	STEEL MARKER POSTS	619.16	
	292						292		LF	BOX BEAM GUARDRAIL	621.30	
	1						1		EACH	MANUFACTURED TERMINAL SECTION, TANGENT	621.51	
	98						98		LF	REMOVAL AND DISPOSAL OF GUARDRAIL	621.80	
	200						200		HR	UNIFORMED TRAFFIC OFFICERS	630.10	
	600						600		HR	FLAGGERS	630.15	
						1	1		LS	FIELD OFFICE, ENGINEERS	631.10	
						1	1		LS	TESTING EQUIPMENT, CONCRETE	631.16	
						1	1		LS	TESTING EQUIPMENT, BITUMINOUS	631.17	
						5000	5000		DL	FIELD OFFICE TELEPHONE (N.A.B.I.)	631.26	
				520			520		HR	EMPLOYEE TRAINEESHIP	634.10	
	1						1		LS	MOBILIZATION/DEMOBILIZATION	635.11	
	1150						1150		LF	4 INCH WHITE LINE	646.20	
	1190						1190		LF	4 INCH YELLOW LINE	646.21	
	12						12		LF	24 INCH STOP BAR	646.26	
	4						4		EACH	LETTER OR SYMBOL	646.30	
		1000			2400		3400		SY	GEOTEXTILE UNDER STONE FILL	649.31	
			150				150		SY	GEOTEXTILE FOR SILT FENCE, WOVEN WIRE REINFORCED	649.515	
			400				400		SY	GEOTEXTILE FOR FILTER CURTAIN	649.61	
			40				40		LB	SEED	651.15	
			240				240		LB	FERTILIZER	651.18	
			1				1		TON	AGRICULTURAL LIMESTONE	651.20	
			1				1		TON	HAY MULCH	651.25	
			250				250		CY	TOPSOIL	651.35	
			1800				1800		SY	GRUBBING MATERIAL	651.40	
			1				1		LS	EPSC PLAN	652.10	
			100				100		HR	MONITORING EPSC PLAN	652.20	
			1				1		LU	MAINTENANCE OF EPSC PLAN (N.A.B.I.)	652.30	
			290				290		SY	TEMPORARY EROSION MATTING	653.20	
			90				90		CY	VEHICLE TRACKING PAD	653.35	

DETAILED SUMMARY OF QUANTITIES		
QUANTITIES	UNIT	ITEMS

PROJECT NAME: JAMAICA
PROJECT NUMBER: ER-BRF 015-1(23)

FILE NAME: s11b316quantitysheet.dgn
PROJECT LEADER: K. HIGGINS
DESIGNED BY: G. LAROCHE
QUANTITY SHEET 2

PLOT DATE: 03-JAN-2013
DRAWN BY: G. LAROCHE
CHECKED BY: K. FRIEDLAND
SHEET 6 OF 82

STATE OF VERMONT
AGENCY OF TRANSPORTATION

QUANTITY SHEET 3

SUMMARY OF ESTIMATED QUANTITIES									TOTALS		DESCRIPTIONS			
	ROADWAY	CULVERT	EROSION CONTROL	TRAINING	BRIDGE	FULL C.E. ITEMS	GRAND TOTAL	FINAL	UNIT	ITEMS	ITEM NUMBER	ROUND
			2				2		EACH	INLET PROTECTION DEVICE, TYPE I	653.40	
			820				820		LF	BARRIER FENCE	653.50	
			350				350		LF	PROJECT DEMARCATION FENCE	653.55	
	67						67		SF	TRAFFIC SIGNS, TYPE A	675.20	
	172						172		LF	SQUARE TUBE SIGN POST AND ANCHOR	675.341	
	11						11		EACH	REMOVING SIGNS	675.50	
					1		1		LU	PRICE ADJUSTMENT, FUEL (N.A.B.I.)	690.50	
	4						4		EACH	SPECIAL PROVISION (GUARDRAIL APPROACH SECTION TO CONCRETE COMBINATION BRIDGE RAILING, TL-3)	900.620	
					258		258		LF	SPECIAL PROVISION (PRE-EXCAVATION OF INTEGRAL ABUTMENT PILES, EARTH)	900.640	
					45		45		LF	SPECIAL PROVISION (PRE-EXCAVATION OF INTEGRAL ABUTMENT PILES, ROCK)	900.640	
	1						1		LS	SPECIAL PROVISION (REMOVAL OF TEMPOARY BRIDGE AND APPROACHES)	900.645	
	1						1		LS	SPECIAL PROVISION (TRAFFIC CONTROL, ALL-INCLUSIVE)	900.645	
	1						1		LU	SPECIAL PROVISION (MAT DENSITY PAY ADJUSTMENT, SMALL QUANTITY)(N.A.B.I)	900.650	
	1						1		LU	SPECIAL PROVISION (MIXTURE PAY ADJUSTMENT)(N.A.B.I.)	900.650	
	665						665		TON	SPECIAL PROVISION (BITUMINOUS CONCRETE PAVEMENT, SMALL QUANTITY)	900.680	

DETAILED SUMMARY OF QUANTITIES		
QUANTITIES	UNIT	ITEMS

PROJECT NAME: JAMAICA
PROJECT NUMBER: ER-BRF 015-1(23)

FILE NAME: s11b316quantitysheet.dgn
PROJECT LEADER: K. HIGGINS
DESIGNED BY: G. LAROCHE
QUANTITY SHEET 3

PLOT DATE: 14-DEC-2012
DRAWN BY: G. LAROCHE
CHECKED BY: K. FRIEDLAND
SHEET 7 OF 82

STATE OF VERMONT
AGENCY OF TRANSPORTATION

BRIDGE QUANTITY SHEET 1

SUMMARY OF BRIDGE QUANTITIES					TOTALS	DESCRIPTIONS		
APPROACH SLAB #1	ABUTMENT #1	SUPER - STRUCTURE	ABUTMENT #2	APPROACH SLAB #2	BRIDGE TOTAL	UNIT	ITEMS	ITEM NUMBER
	1200		1100		2300	CY	UNCLASSIFIED CHANNEL EXCAVATION	203.27
	130		110		240	CY	STRUCTURE EXCAVATION	204.25
	115		85		200	CY	GRANULAR BACKFILL FOR STRUCTURES	204.30
	34	184	31		249	CY	CONCRETE, HIGH PERFORMANCE CLASS A	501.33
32	39		41	32	144	CY	CONCRETE, HIGH PERFORMANCE CLASS B	501.34
	1				1	LS	FURNISHING EQUIPMENT FOR DRIVING PILING	504.10
	189		144		333	LF	STEEL PILING, HP 12 X 84	505.165
	2		1		3	EACH	DYNAMIC PILE LOADING TEST	505.45
		300860			300860	LB	STRUCTURAL STEEL, CURVED PLATE GIRDER	506.56
	9400		10600		20000	LB	REINFORCING STEEL, LEVEL I	507.11
3250	4100	53300	4100	3250	68000	LB	REINFORCING STEEL, LEVEL II	507.12
		1			1	LS	SHEAR CONNECTORS (2216-7/8" X 7")	508.15
	5	7	3		15	GAL	WATER REPELLENT, SILANE	514.10
34				34	68	LF	BRIDGE EXPANSION JOINT, ASPHALTIC PLUG	516.10
		500			500	SY	SHEET MEMBRANE WATERPROOFING, TORCH APPLIED	519.20
34				34	68	LF	JOINT SEALER, HOT POURED	524.11
		265			265	LF	BRIDGE RAILING, GALVANIZED STEEL TUBING/CONCRETE COMBINATION	525.45
	7		7		14	EACH	BEARING DEVICE ASSEMBLY, STEEL REINFORCED ELASTOMERIC PAD	531.17
	1150		1400		2550	CY	STONE FILL, TYPE IV	613.13
	1100		1300		2400	SY	GEOTEXTILE UNDER STONE FILL	649.31
	1				1	LU	PRICE ADJUSTMENT, FUEL (N.A.B.I.)	690.50
	154		104		258	LF	SPECIAL PROVISION (PRE-EXCAVATION OF INTEGRAL ABUTMENT PILES, EARTH)	900.640
	21		24		45	LF	SPECIAL PROVISION (PRE-EXCAVATION OF INTEGRAL ABUTMENT PILES, ROCK)	900.640

DETAILED SUMMARY OF QUANTITIES		
QUANTITIES	UNIT	ITEMS

PROJECT NAME: JAMAICA
PROJECT NUMBER: ER-BRF 015-1(23)

FILE NAME: s11b316quantitysheet.dgn
PROJECT LEADER: K. HIGGINS
DESIGNED BY: G. LAROCHE
BRIDGE QUANTITY SHEET 1

PLOT DATE: 14-DEC-2012
DRAWN BY: G. LAROCHE
CHECKED BY: K. FRIEDLAND
SHEET 8 OF 82

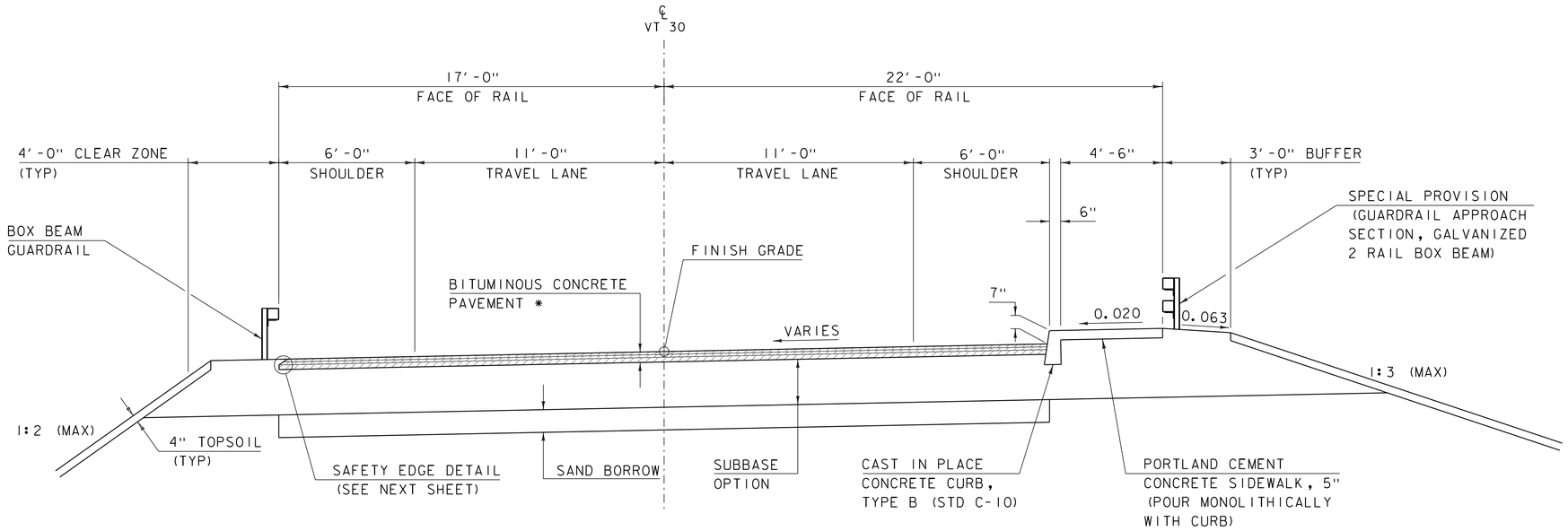

TYPICAL ROAD SECTION

SCALE 1" = 3'-0"

* 1 ½" BITUMINOUS CONCRETE PAVEMENT (TYPE IVS)
1 ½" BITUMINOUS CONCRETE PAVEMENT (TYPE IVS)
2 ½" BITUMINOUS CONCRETE PAVEMENT (TYPE IIS)

2'-0" SUBBASE OPTION
1'-0" SAND BORROW

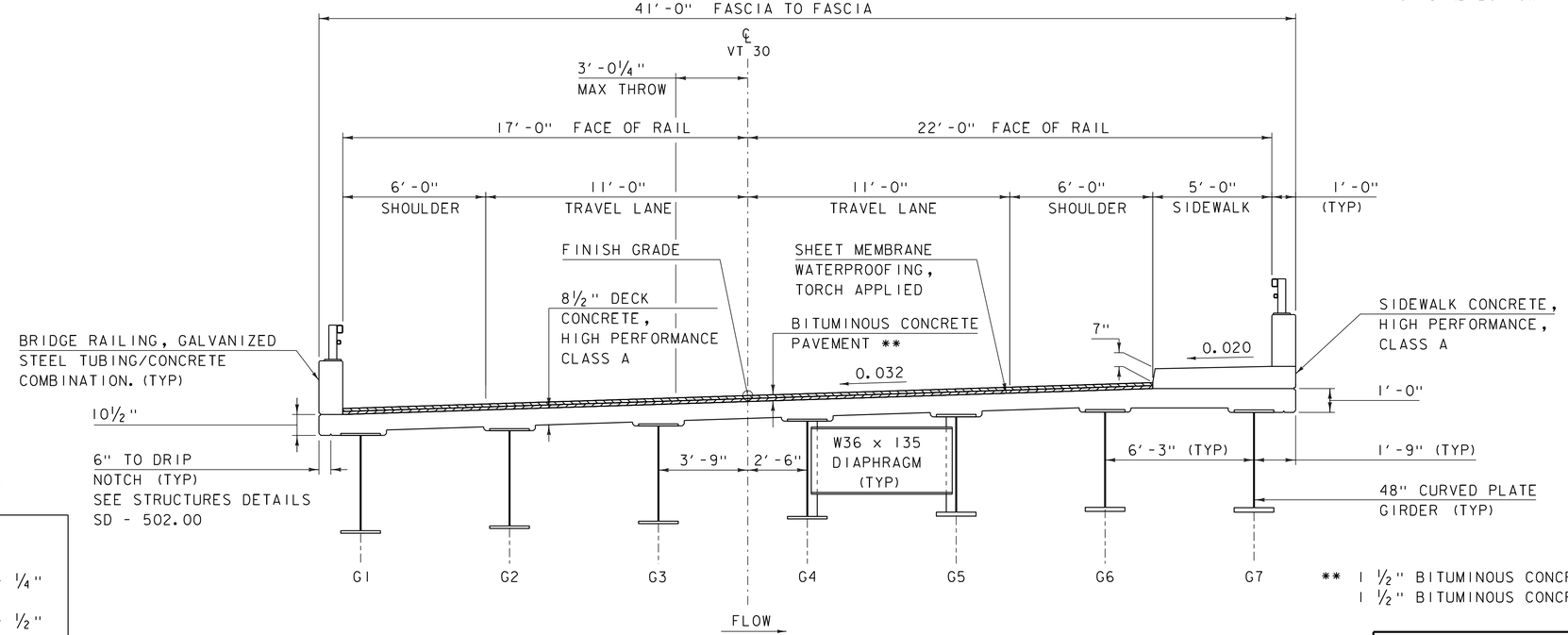

** 1 ½" BITUMINOUS CONCRETE PAVEMENT (TYPE IVS) OVER
1 ½" BITUMINOUS CONCRETE PAVEMENT (TYPE IVS)

TYPICAL BRIDGE SECTION

SCALE 1" = 3'-0"

MATERIAL TOLERANCES

(IF USED ON PROJECT)

SURFACE	
- PAVEMENT (TOTAL THICKNESS)	+/- ¼"
- AGGREGATE SURFACE COURSE	+/- ½"
SUBBASE	+/- 1"
SAND BORROW	+/- 1"

PROJECT NAME: JAMAICA
PROJECT NUMBER: ER-BRF 015-1(23)

FILE NAME: s11b316typ.dgn
PROJECT LEADER: K. HIGGINS
DESIGNED BY: G. LAROCHE
TYPICAL SECTIONS 1

PLOT DATE: 07-DEC-2012
DRAWN BY: K. FRIEDLAND
CHECKED BY: W. LAMMER
SHEET 9 OF 82

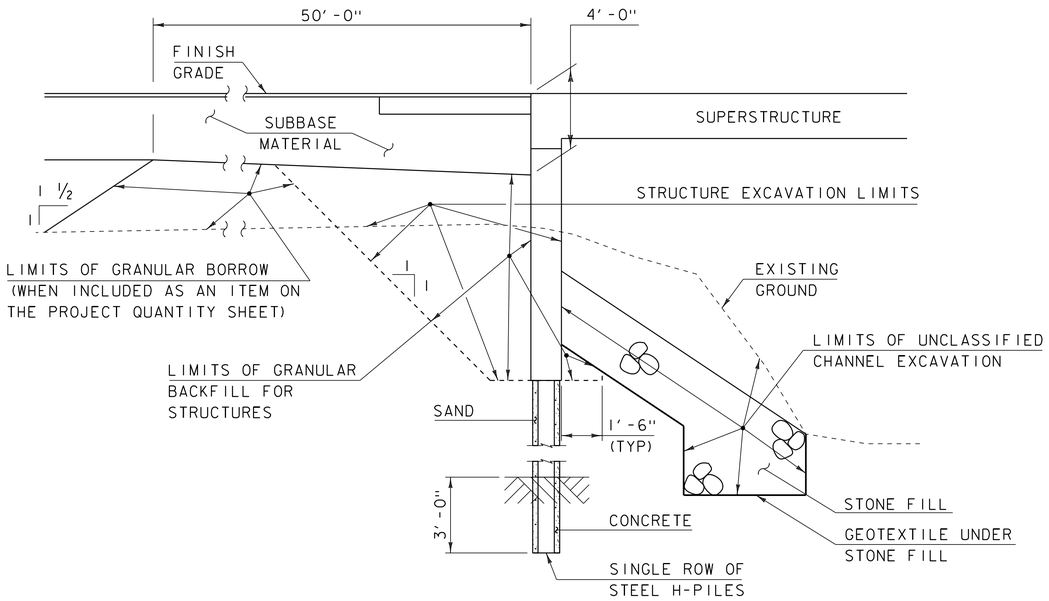

TYPICAL INTEGRAL ABUTMENT SECTION

NOT TO SCALE

ACTUAL LIMITS OF STRUCTURE EXCAVATION SHALL BE DETERMINED BY THE CONTRACTOR. HOWEVER, ONLY THE EXCAVATION BETWEEN THE LIMITS SHOWN WILL BE PAID FOR UNDER ITEM 204.25 "STRUCTURE EXCAVATION". EXCAVATION BY THE CONTRACTOR OUTSIDE OF THESE LIMITS WILL BE AT THE EXPENSE OF THE CONTRACTOR.

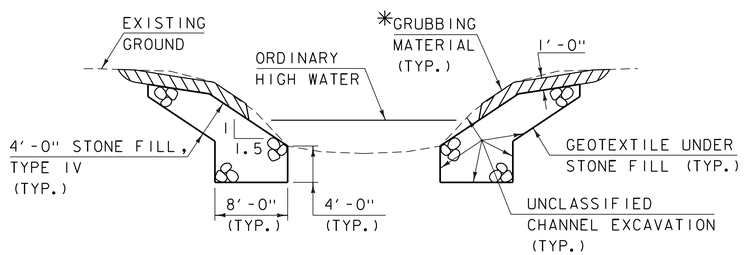

TYPICAL CHANNEL SECTION

(NOT TO SCALE)

*GRUBBING MATERIAL SHALL NOT BE PLACED ON THE STONE FILL IN THE AREA UNDER THE BRIDGE. WHENEVER CHANNEL SLOPE INTERSECTS ROADWAY SUBBASE, GRUBBING MATERIAL SHALL BEGIN AT THE BOTTOM OF SUBBASE.

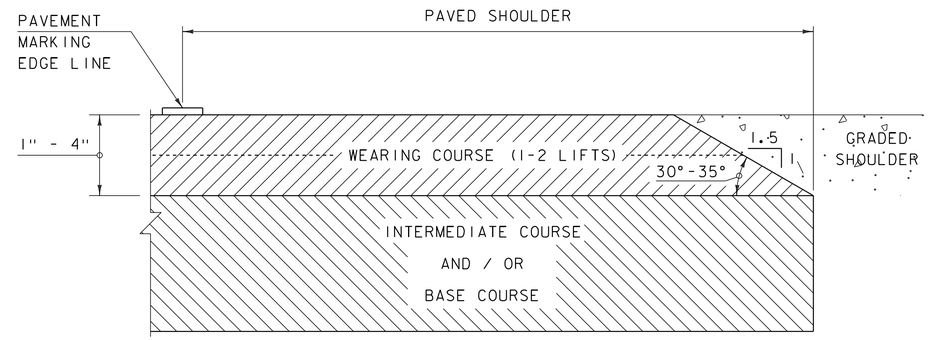

SAFETY EDGE DETAIL

NOT TO SCALE

NOTE: LEVELING COURSE MAY INCLUDE THE "SAFETY EDGE" AT THE CONTRACTOR'S CHOICE.

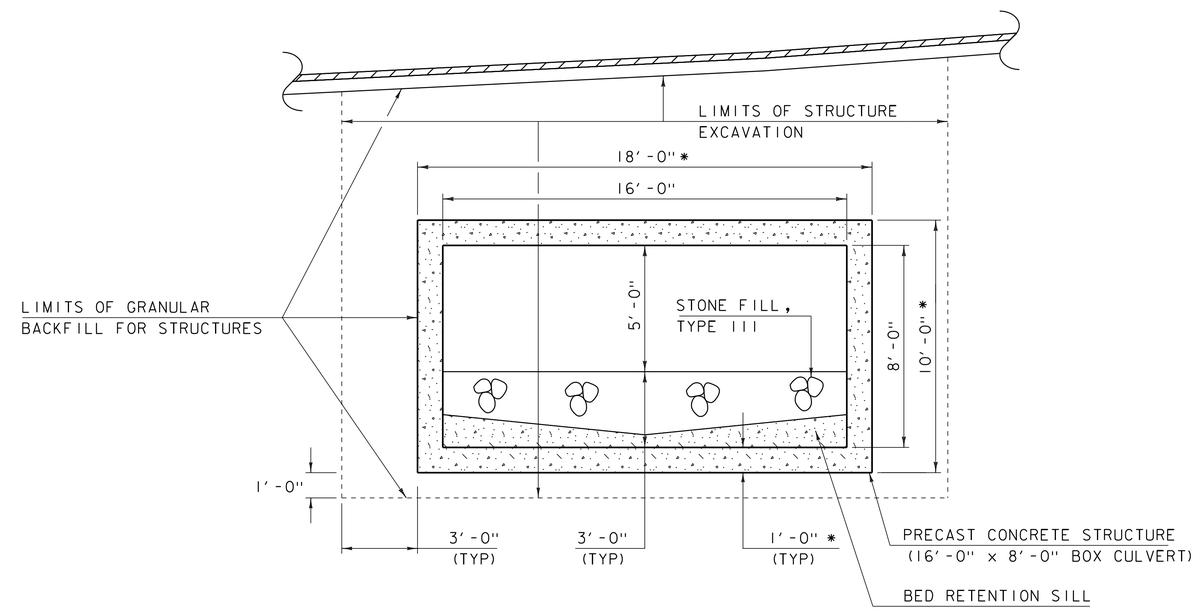

BOX CULVERT TYPICAL SECTION

SCALE 1" = 3'-0"

* FOR ESTIMATING PURPOSES ONLY. ACTUAL DIMENSION SHALL BE DETERMINED BY THE CONTRACTOR

PROJECT NAME: JAMAICA	
PROJECT NUMBER: ER-BRF 015-1(23)	
FILE NAME: sllb316typ.dgn	PLOT DATE: 07-DEC-2012
PROJECT LEADER: K. HIGGINS	DRAWN BY: K. FRIEDLAND
DESIGNED BY: G. LAROCHE	CHECKED BY: W. LAMMER
TYPICAL SECTIONS 2	SHEET 10 OF 82

GPS CONTROL POINTS

HVCTRL #1

REBAR

NORTH = 217794.372
EAST = 1568067.516
ELEV. = 666.270

GENERAL LOCATION; IT IS ABOUT 84 M (275.6 FT) SOUTH OF HOUSE NO 3327 AND THE INTERSECTION OF MEADOWS ROAD J64 AND VT ROUTE 30, SET IN THE EDGE OF A FIELD.
THE MARK IS A REBAR WITH CAP SET 2 CM (1 INCH) BELOW GROUND SURFACE.
IT IS 5.0 M (16.4 FT) WEST OF AND 0.3 M (1.0 FT) LOWER THAN THE CENTERLINE OF VT ROUTE 30, 0.5 M (1.6 FT) WEST OF THE WEST EDGE OF PAVEMENT OF VT ROUTE 30, 12.6 M (41.3 FT) NORTH OF A 50 MPH METAL SIGN POST, 24.6 M (80.7 FT) NORTH OF POLE NO 5/436/667, 23.0 M (75.5 FT) SOUTH-SOUTHEAST OF POLE 5/435/91/668.

HVCTRL #2

REBAR

NORTH = 218681.832
EAST = 1567457.472
ELEV. = 679.148

GENERAL LOCATION; IT IS ABOUT 0.1 MI (0.2 KM) NORTHWEST FROM THE INTERSECTION OF VT ROUTE 30 AND MEADOWS ROAD J64, SET ON THE SOUTHWEST EDGE OF A SMALL FIELD.
THE MARK IS A REBAR WITH CAP SET 2 CM (1 INCH) BELOW GROUND SURFACE.
IT IS 6.7 M (22.0 FT) NORTHEAST OF AND LEVEL WITH THE CENTERLINE OF VT ROUTE 30, 0.2 M (0.7 FT) NORTHEAST OF THE NORTHEAST EDGE OF PAVEMENT OF VT ROUTE 30, 20.5 M (67.3 FT) SOUTH-SOUTHEAST OF POLE NO 431-1, 20.0 M (65.6 FT) SOUTH-SOUTHEAST OF THE SOUTHEAST END POST OF A WOODEN SLATE FENCE FOR A CEMETERY, 23.0 M (75.5 FT) EAST OF AND ACROSS THE ROAD FROM POLE NO 431/672, 37.6 M (123.4 FT) NORTH-NORTHWEST OF POLE NO 32A/671S, 35.6 M (116.8 FT) NORTHWEST OF THE WEST CORNER OF A 2-BAY ATTACHED GARAGE FOR HOUSE NO 3458.

TRAVERSE TIES

HVCTRL #4

NORTH = 218806.426
EAST = 1565797.450
ELEV. = 726.429

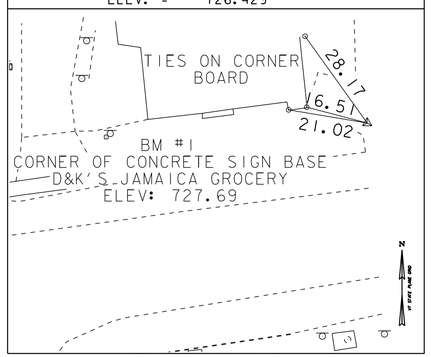

HVCTRL #5

NORTH = 218698.495
EAST = 1565165.557
ELEV. = 730.762

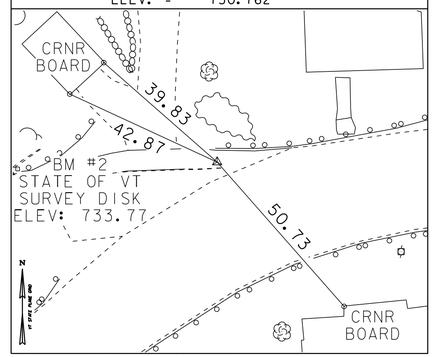

HVCTRL #6

NORTH = 218439.500
EAST = 1564899.784
ELEV. = 735.539

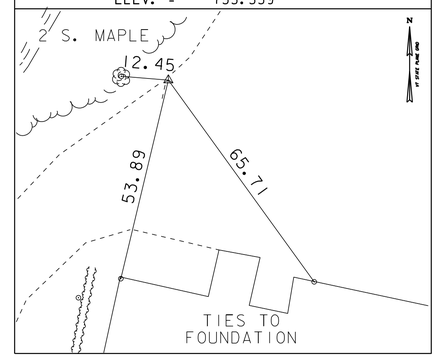

HVCTRL #7

NORTH = 218921.082
EAST = 1565075.801
ELEV. = 731.897

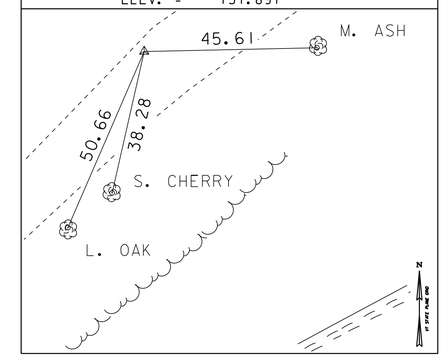

HVCTRL #8

NORTH = 218676.824
EAST = 1565210.087
ELEV. = 728.708

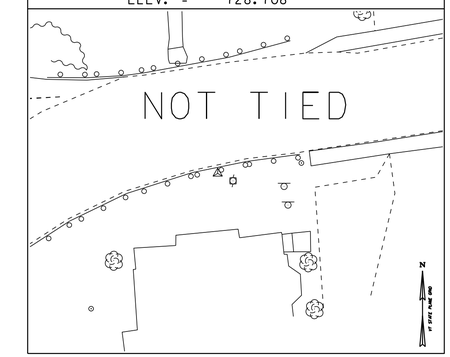

*MAIN TRAVERSE COMPLETED 12/12/2011 BY R.GILMAN P.C. & C.CYR

ALIGNMENT TIES

Horizontal Alignment Name: VT30

	STATION	NORTHING	EASTING
Element: Linear			
POB (3)	208+00.00	218709.3299	1565319.8020
PC (13)	209+34.66	218688.2641	1565186.7990
Tangent Direction: S 80^59'59.77" W			
Tangent Length: 134.66			
Element: Circular			
PC (13)	209+34.66	218688.2641	1565186.7990
PI( )	211+89.44	218648.4077	1564935.1571
CC (11)		217996.8824	1565296.3039
PT (4)	214+23.35	218456.1237	1564768.0072
Radius: 700.00			
Design Speed(mph): 35.00			
Superelevation: 2.00%			
Delta: 39^59'59.77" Left			
Degree of Curvature(Arc): 8^11'06.40"			
Length: 488.69			
Tangent: 254.78			
Chord: 478.83			
Middle Ordinate: 42.22			
External: 44.92			
Tangent Direction: S 80^59'59.77" W			
Radial Direction: N 9^00'00.23" W			
Chord Direction: S 60^59'59.88" W			
Radial Direction: N 49^00'00.00" W			
Tangent Direction: S 41^00'00.00" W			
Element: Linear			
PT (4)	214+23.35	218456.1237	1564768.0072
POE (1)	215+00.00	218398.2770	1564717.7218
Tangent Direction: S 41^00'00.00" W			
Tangent Length: 76.65			

Horizontal Alignment Name: CHANNEL

	STATION	NORTHING	EASTING
Element: Linear			
POB (26)	8+00.00	218877.5750	1565077.3201
PI(27)	10+00.00	218689.6365	1565008.9160
Tangent Direction: S 20^00'00.00" W			
Tangent Length: 200.00			
Element: Linear			
PI(27)	10+00.00	218689.6365	1565008.9160
POE (23)	13+00.00	218412.4726	1565123.7211
Tangent Direction: S 22^30'00.00" E			
Tangent Length: 300.00			

Horizontal Alignment Name: WaterSt

	STATION	NORTHING	EASTING
Element: Linear			
POB (2)	30+00.00	218590.8645	1564925.9187
PC (6)	30+14.40	218603.0798	1564918.2858
Tangent Direction: N 32^00'00.00" W			
Tangent Length: 14.40			
Element: Circular			
PC (6)	30+14.40	218603.0798	1564918.2858
PI( )	30+37.99	218623.0780	1564905.7895
CC (10)		218629.5757	1564960.6882
PT (12)	30+58.47	218645.4410	1564913.2720
Radius: 50.00			
Delta: 50^30'00.00" Right			
Degree of Curvature(Arc): 114^35'29.61"			
Length: 44.07			
Tangent: 23.58			
Chord: 42.66			
Middle Ordinate: 4.78			
External: 5.28			
Tangent Direction: N 32^00'00.00" W			
Radial Direction: N 58^00'00.00" E			
Chord Direction: N 6^45'00.00" W			
Radial Direction: S 71^30'00.00" E			
Tangent Direction: N 18^30'00.00" E			
Element: Linear			
PT (12)	30+58.47	218645.4410	1564913.2720
PC (19)	30+80.80	218666.6150	1564920.3568
Tangent Direction: N 18^30'00.00" E			
Tangent Length: 22.33			
Element: Circular			
PC (19)	30+80.80	218666.6150	1564920.3568
PI( )	31+25.39	218708.8985	1564934.5046
CC (20)		218476.2322	1565489.3509
PT (21)	31+69.81	218748.6265	1564954.7470
Radius: 600.00			
Delta: 8^30'00.00" Right			
Degree of Curvature(Arc): 9^32'57.47"			
Length: 89.01			
Tangent: 44.59			
Chord: 88.93			
Middle Ordinate: 1.65			
External: 1.65			
Tangent Direction: N 18^30'00.00" E			
Radial Direction: S 71^30'00.00" E			
Chord Direction: N 22^45'00.00" E			
Radial Direction: S 63^00'00.00" E			
Tangent Direction: N 27^00'00.00" E			
Element: Linear			
PT (21)	31+69.81	218748.6265	1564954.7470
POE (9)	32+00.00	218775.5243	1564968.4522
Tangent Direction: N 27^00'00.00" E			
Tangent Length: 30.19			

Horizontal Alignment Name: BOX 2

	STATION	NORTHING	EASTING
Element: Linear			
POB (110)	50+00.00	218598.1836	1565034.8937
PC (111)	51+02.90	218540.6414	1564949.5839
Tangent Direction: S 56^00'00.00" W			
Tangent Length: 102.90			
Element: Circular			
PC (111)	51+02.90	218540.6414	1564949.5839
PI( )	52+11.40	218479.9703	1564859.6352
CC (112)		218043.2189	1565285.0996
PT (113)	53+17.58	218391.6406	1564796.6303
Radius: 600.00			
Delta: 20^30'00.00" Left			
Degree of Curvature(Arc): 9^32'57.47"			
Length: 214.68			
Tangent: 108.50			
Chord: 213.53			
Middle Ordinate: 9.58			
External: 9.73			
Tangent Direction: S 56^00'00.00" W			
Radial Direction: N 34^00'00.00" W			
Chord Direction: S 45^45'00.00" W			
Radial Direction: N 54^30'00.00" W			
Tangent Direction: S 35^30'00.00" W			
Element: Linear			
PT (113)	53+17.58	218391.6406	1564796.6303
PC (114)	53+23.11	218387.1343	1564793.4160
Tangent Direction: S 35^30'00.00" W			
Tangent Length: 5.54			
Element: Circular			
PC (114)	53+23.11	218387.1343	1564793.4160
PI( )	53+45.52	218368.8941	1564780.4054
CC (115)		218329.0640	1564874.8275
PT (116)	53+67.19	218346.8464	1564776.4213
Radius: 100.00			
Delta: 25^15'25.17" Left			
Degree of Curvature(Arc): 57^17'44.81"			
Length: 44.08			
Tangent: 22.40			
Chord: 43.73			
Middle Ordinate: 2.42			
External: 2.48			
Tangent Direction: S 35^30'00.00" W			
Radial Direction: N 54^30'00.00" W			
Chord Direction: S 22^52'17.42" W			
Radial Direction: N 79^45'25.17" W			
Tangent Direction: S 10^14'34.83" W			
Element: Linear			
PT (116)	53+67.19	218346.8464	1564776.4213
POE (17)	54+00.00	218314.5640	1564770.5878
Tangent Direction: S 10^14'34.83" W			
Tangent Length: 32.81			

Horizontal Alignment Name: FIRE DRIVE
Description: Fire Station Driveway Proposed

	STATION	NORTHING	EASTING
Element: Linear			
POB (2)	20+00.00	218590.8645	1564925.9187
PC (5)	20+36.29	218560.0876	1564945.1503
Tangent Direction: S 32^00'00.00" E			
Tangent Length: 36.29			
Element: Circular			
PC (5)	20+36.29	218560.0876	1564945.1503
PI( )	20+58.03	218541.6505	1564956.6710
CC (7)		218533.5917	1564902.7479
PT (8)	20+77.31	218520.6507	1564951.0442
Radius: 50.00			
Design Speed(mph): 25.00			
Superelevation: 6.00%			
Delta: 47^00'00.00" Right			
Degree of Curvature(Arc): 114^35'29.61"			
Length: 41.02			
Tangent: 21.74			
Chord: 39.87			
Middle Ordinate: 4.15			
External: 4.52			
Tangent Direction: S 32^00'00.00" E			
Radial Direction: S 58^00'00.00" W			
Chord Direction: S 8^30'00.00" E			
Radial Direction: N 75^00'00.00" W			
Tangent Direction: S 15^00'00.00" W			
Element: Linear			
PT (8)	20+77.31	218520.6507	1564951.0442
POE ()	22+08.48	218393.9512	1564917.0951
Tangent Direction: S 15^00'00.00" W			
Tangent Length: 131.17			

DATUM	
VERTICAL	NAVD 88
HORIZONTAL	NAD 83 (CORS)
ADJUSTMENT	COMPASS

PROJECT NAME: JAMAICA
PROJECT NUMBER: ER-BRF 015-1(23)

FILE NAME: 11B316\Survey\x11b316ti.dgn
PROJECT LEADER: K. HIGGINS
DESIGNED BY: J. SALVATORI
TIE SHEET

PLOT DATE: 11-29-12
DRAWN BY: S. DONOVAN
CHECKED BY: J.SALVATORI
SHEET 11 OF 82

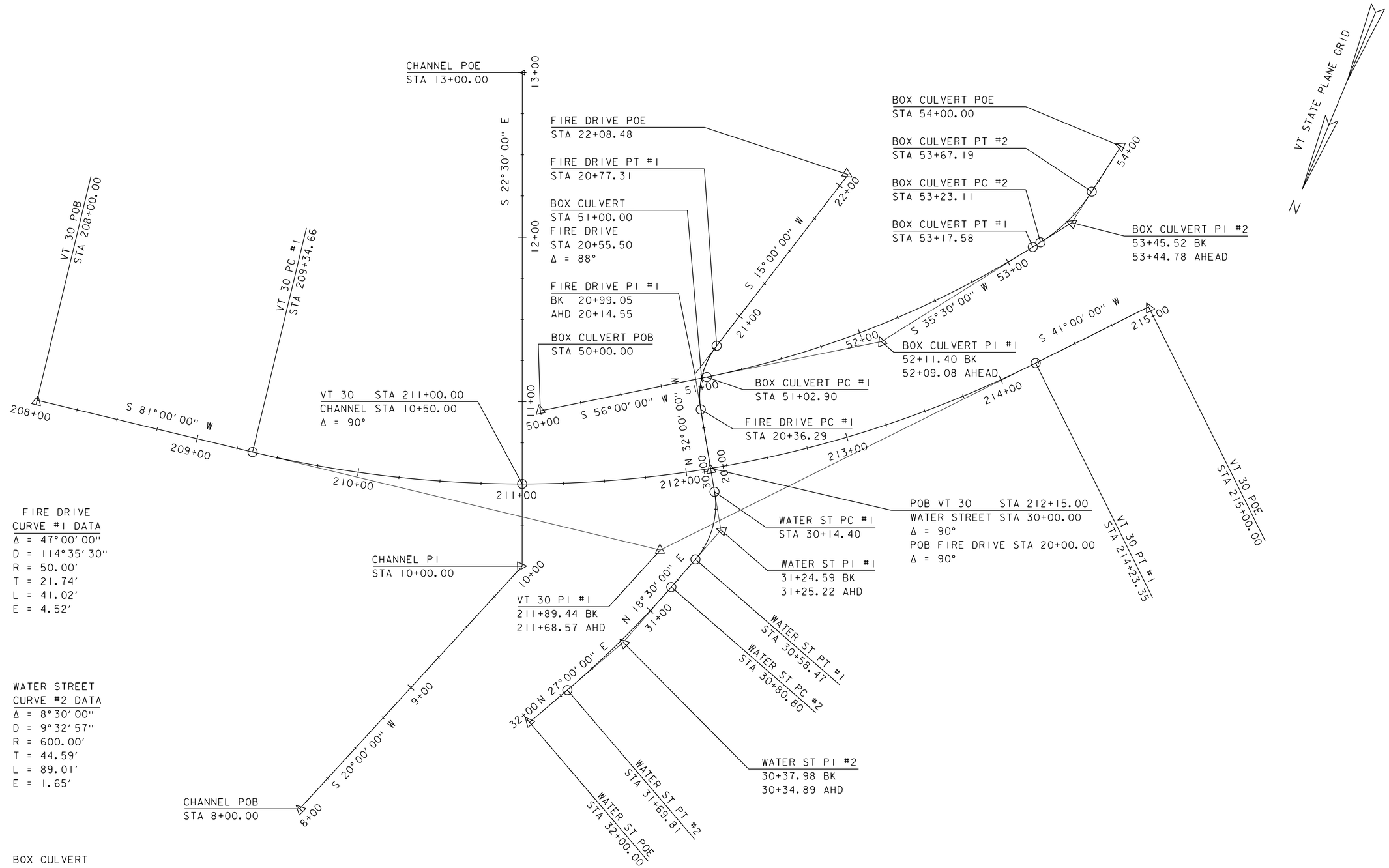

VT 30 CURVE #1 DATA	FIRE DRIVE CURVE #1 DATA
Δ = 40° 00' 00"	Δ = 47° 00' 00"
D = 8° 11' 06"	D = 114° 35' 30"
R = 700.00'	R = 50.00'
T = 254.78'	T = 21.74'
L = 488.69'	L = 41.02'
E = 44.92'	E = 4.52'

WATER STREET CURVE #1 DATA	WATER STREET CURVE #2 DATA
Δ = 50° 30' 00"	Δ = 8° 30' 00"
D = 114° 35' 30"	D = 9° 32' 57"
R = 50.00'	R = 600.00'
T = 23.58'	T = 44.59'
L = 44.07'	L = 89.01'
E = 5.28'	E = 1.65'

BOX CULVERT CURVE #1 DATA	BOX CULVERT CURVE #2 DATA
Δ = 20° 30' 00"	Δ = 25° 15' 25"
D = 9° 32' 57"	D = 57° 17' 45"
R = 600.00'	R = 100.00'
T = 108.50'	T = 22.40'
L = 214.68'	L = 44.08'
E = 9.73'	E = 2.48'

ALIGNMENT

SCALE 1" = 30'-0"
30 0 30

PROJECT NAME: JAMAICA	
PROJECT NUMBER: ER-BRF 015-1(23)	
FILE NAME: sllb316.alignmentsheet.dgn	PLOT DATE: 07-DEC-2012
PROJECT LEADER: K. HIGGINS	DRAWN BY: K. FRIEDLAND
DESIGNED BY: G. LAROCHE	CHECKED BY: G. LAROCHE
ALIGNMENT	SHEET 12 OF 82

SPECIAL PROVISION (REMOVAL OF TEMPORARY BRIDGE AND APPROACHES)
STA 208+75.00 - 214+02.00

STEEL MARKER POST
STA 209+60.00 LT
STA 209+86.85 RT
STA 211+60.52 RT
STA 212+61.85 RT

APPROXIMATE FUTURE DRY HYDRANT LOCATION (INDEPENDENT PROJECT)

CONSTRUCT 20' DRIVE FOR DRY HYDRANT ACCESS
6" AGGREGATE SURFACE COURSE
HVCTRL #120
120=VSE#200

CULVERT INLET
STA 51+41.00
HVCTRL #6

BENCHMARK
RR SPIKE IN POLE
ELEV. 732.78

END FIRE DRIVE
STA 21+08.77

STONE FILL, TYPE III

BEGIN APPROACH
STA 208+75.00

BEGIN PROJECT
STA 209+75.00

BEGIN BRIDGE
STA 210+30.17
F.G. = 733.32

BENCHMARK
CHISELED SQUARE IN TOP OF ABUT.
ELEV. 732.93

BENCHMARK
RR SPIKE IN POLE
ELEV. 728.63

STONE FILL, TYPE IV

CULVERT OUTLET
STA 50+56.00

VT STATE PLANE GRID

MATCHLINE 213+75

VT RTE 30 TO TOWNSHEND

VT RTE 30 TO STRATTON

SWALE FLOW

R=5' (TYP)

R=30' (TYP)

R=25' (TYP)

R=8' (TYP)

END PROJECT
STA 213+50.00

BENCHMARK
CHISELED SQUARE ON ABUT.
ELEV. 731.75

BENCHMARK
STATE OF VERMONT SURVEY DISK
ELEV. 733.77

END BRIDGE
STA 211+61.83
F.G. = 737.42

24" OPTION PIPE ①

STONE FILL, TYPE II

STONE FILL, TYPE IV (TYP)

END WATER ST
STA 31+25.00

CAST IN PLACE CONCRETE CURB, TYPE B
STA 208+75.00 - 209+60.00 RT
SAT 209+80.50 - 210+29.50 RT
STA 211+62.60 - 211+87.00 RT

PORTLAND CEMENT CONCRETE SIDEWALK, 5"
STA 208+75.00 - 209+25.00 LT
STA 208+75.00 - 210+29.50 RT
STA 211+62.60 - 211+87.00 RT

CONSTRUCT 5'-0" PAVED APRON
STA 209+59.00 - 209+80.44 RT
STA 212+71.70 - 213+14.32 RT
STA 213+62.49 - 213+88.36 RT

AGGREGATE SURFACE COURSE
STA 209+59.00 - 209+80.44 RT
STA 212+71.70 - 213+14.32 RT
STA 20+38.00 - 21+42.00 LT

CULVERTS AND STORM DRAINS
(SEE DRAINAGE DETAIL SHEET)
① STA 211+60.52 RT - 212+61.85 RT
② STA 211+68.21 RT - 212+29.00 LT
③ STA 212+61.00 RT
④ STA 212+62.00 RT
⑤ STA 212+34.40 LT - 213+23.71 LT

LAYOUT 1
SCALE 1" = 20'-0"
20 0 20

PROJECT NAME: JAMAICA	
PROJECT NUMBER: ER-BRF 015-1(23)	
FILE NAME: sllb316.bdr.dgn	PLOT DATE: 07-DEC-2012
PROJECT LEADER: K. HIGGINS	DRAWN BY: K. FRIEDLAND
DESIGNED BY: G. LAROCHE	CHECKED BY: J. SALVATORI
LAYOUT 1	SHEET 13 OF 82

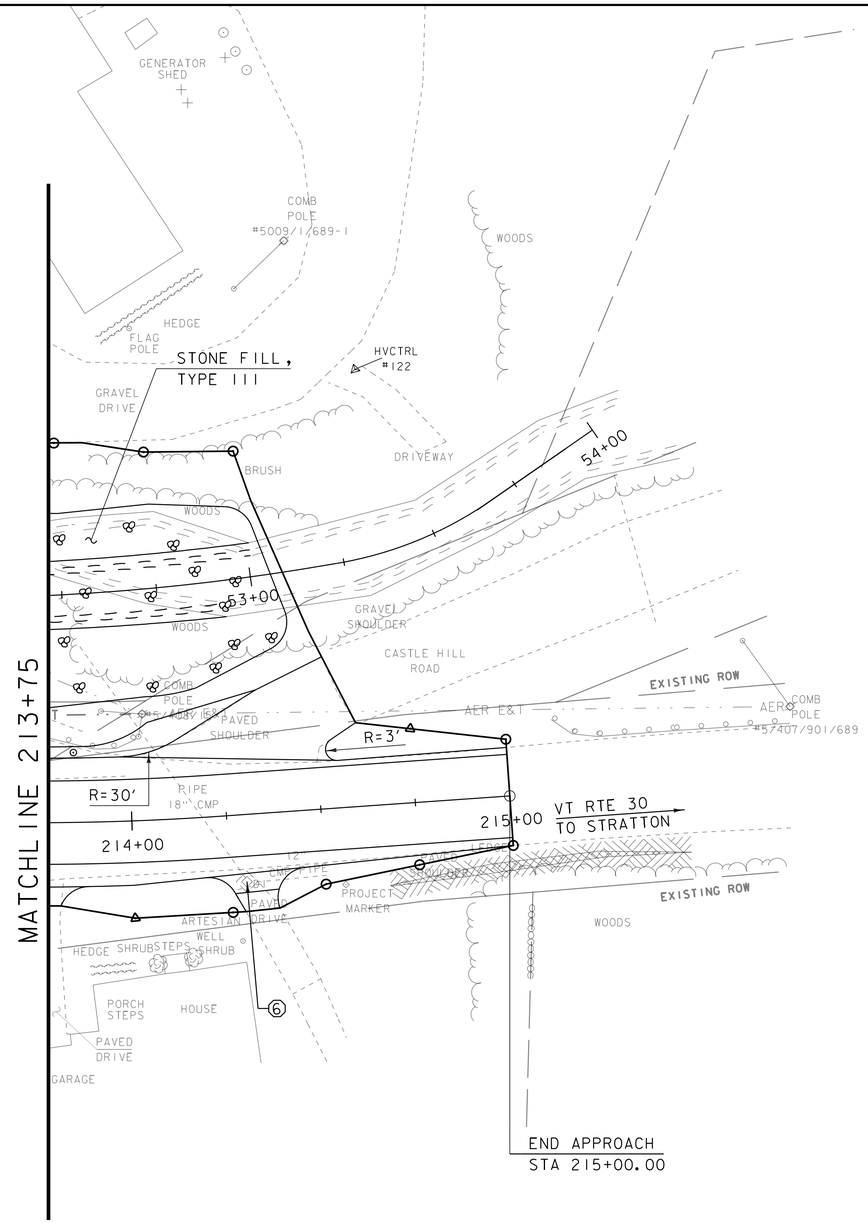

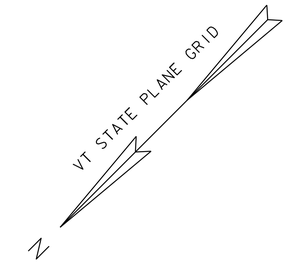

STEEL MARKER POST
STA 213+85.00 LT

CONSTRUCT 5'-0" PAVED APRON
STA 214+19.48 - 214+42.00 RT

AGGREGATE SURFACE COURSE
STA 214+19.48 - 214+42.00 RT

CHANGING ELEVATION OF DROP INLETS, CATCH BASINS OR MANHOLES
6 214+29.20 RT

LAYOUT 2
SCALE 1" = 20'-0"
20 0 20

PROJECT NAME: JAMAICA	
PROJECT NUMBER: ER-BRF 015-1(23)	
FILE NAME: s11b316.bdr.dgn	PLOT DATE: 07-DEC-2012
PROJECT LEADER: K. HIGGINS	DRAWN BY: K. FRIEDLAND
DESIGNED BY: G. LAROCHE	CHECKED BY: J. SALVATORI
LAYOUT 2	SHEET 14 OF 82

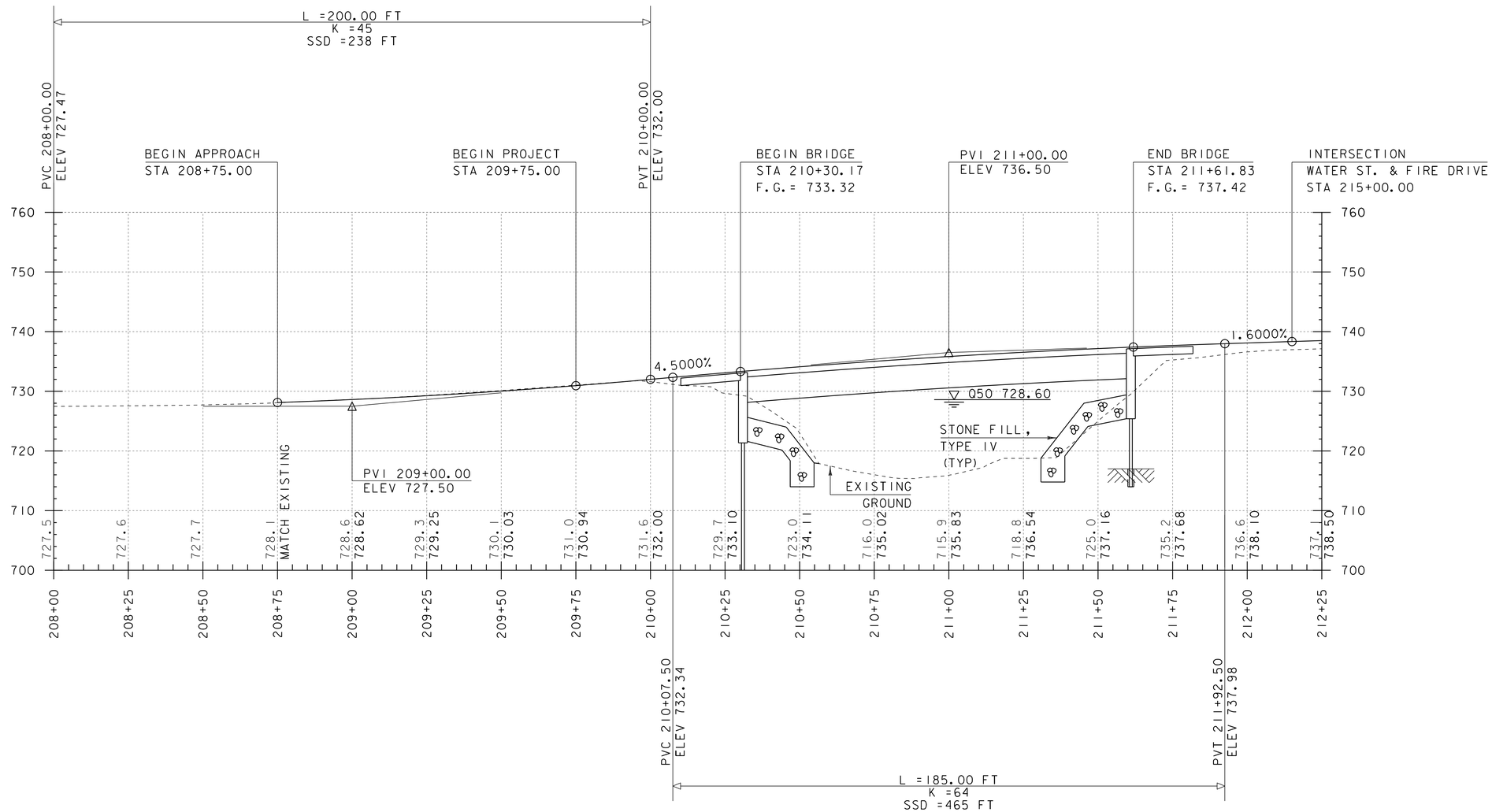

MAINLINE PROFILE 1

THE GRADES SHOWN TO THE NEAREST TENTH ARE THE ORIGINAL GROUND ELEVATIONS ALONG THE PROPOSED ALIGNMENT.

THE GRADES SHOWN TO THE NEAREST HUNDREDTH ARE THE FINISH GRADES ALONG THE PROPOSED ALIGNMENT.

PROJECT NAME: JAMAICA	
PROJECT NUMBER: ER-BRF 015-1(23)	
FILE NAME: sllb316.pro.dgn	PLOT DATE: 07-DEC-2012
PROJECT LEADER: K. HIGGINS	DRAWN BY: K. FRIEDLAND
DESIGNED BY: G. LAROCHE	CHECKED BY: G. LAROCHE
MAINLINE PROFILE 1	SHEET 15 OF 82

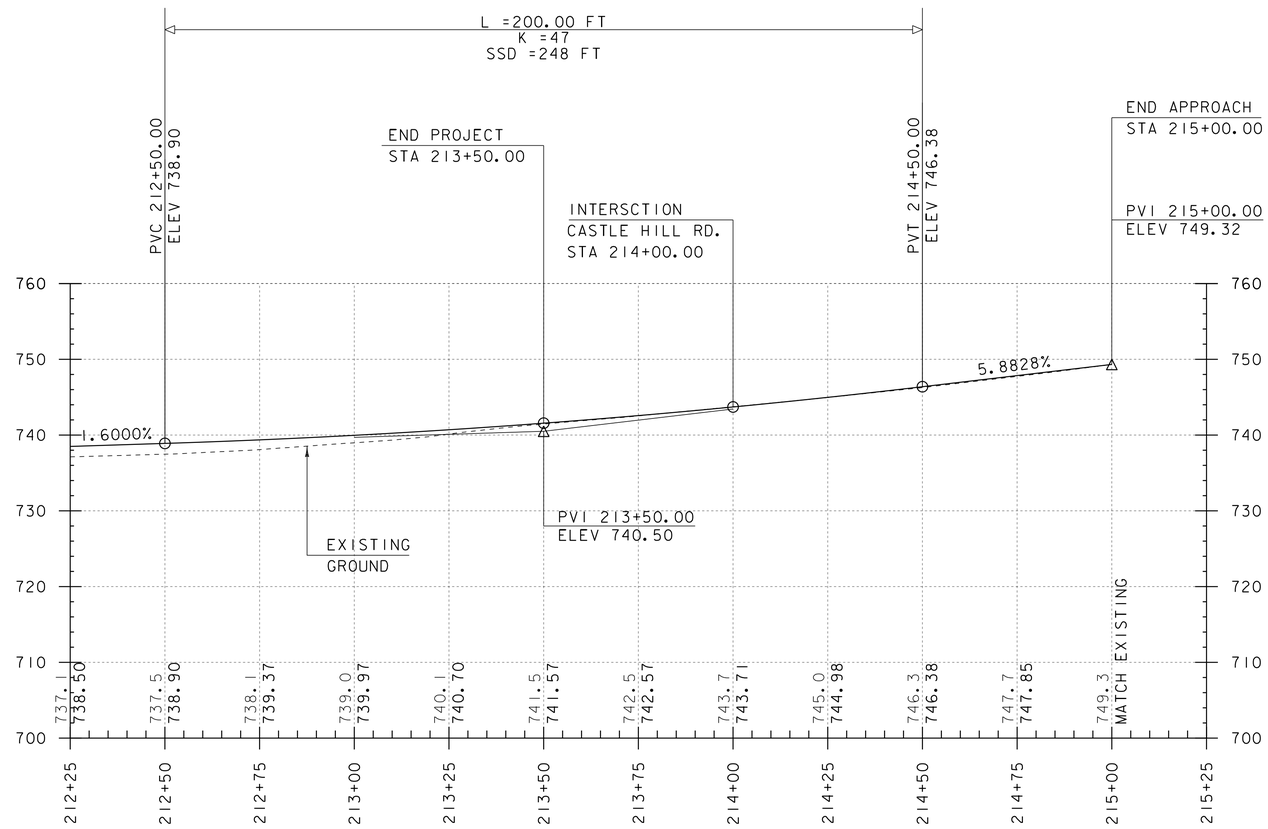

MAINLINE PROFILE 2

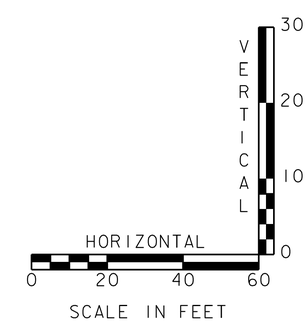

THE GRADES SHOWN TO THE NEAREST TENTH ARE THE ORIGINAL GROUND ELEVATIONS ALONG THE PROPOSED ALIGNMENT.

THE GRADES SHOWN TO THE NEAREST HUNDREDTH ARE THE FINISH GRADES ALONG THE PROPOSED ALIGNMENT.

PROJECT NAME: JAMAICA	
PROJECT NUMBER: ER-BRF 015-1(23)	
FILE NAME: sllb316.pro.dgn	PLOT DATE: 07-DEC-2012
PROJECT LEADER: K. HIGGINS	DRAWN BY: K. FRIEDLAND
DESIGNED BY: G. LAROCHE	CHECKED BY: G. LAROCHE
MAINLINE PROFILE 2	SHEET 16 OF 82

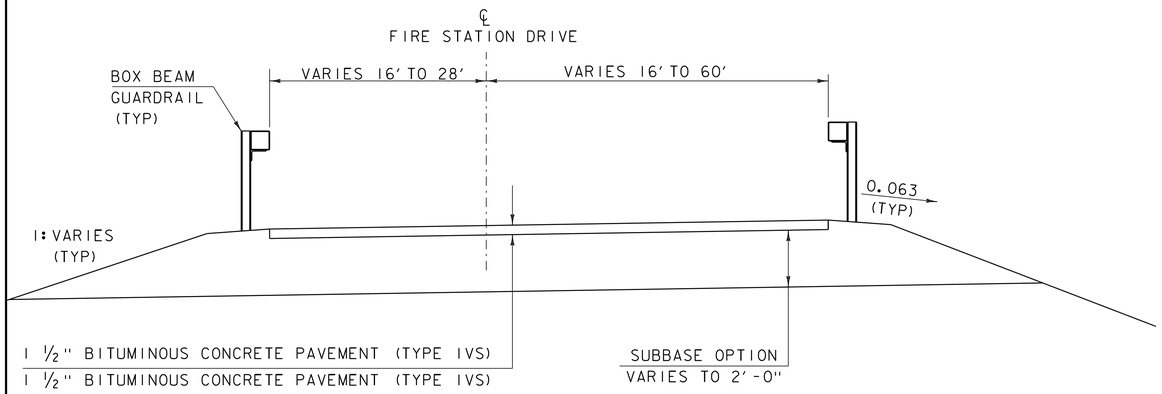

FIRE DRIVE TYPICAL SECTION

NOT TO SCALE

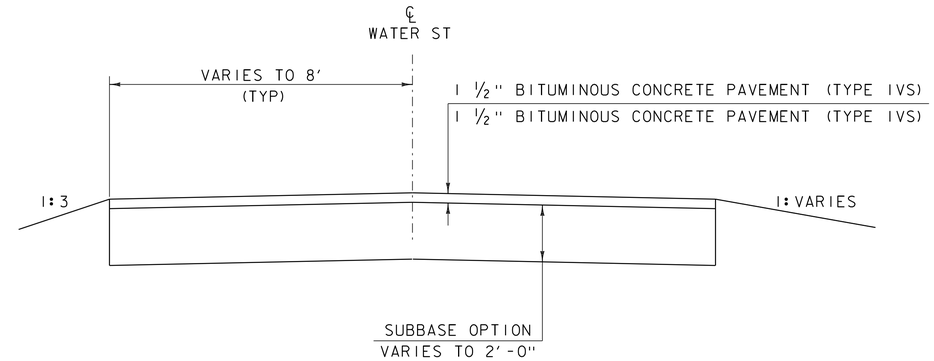

WATER STREET TYPICAL SECTION

NOT TO SCALE

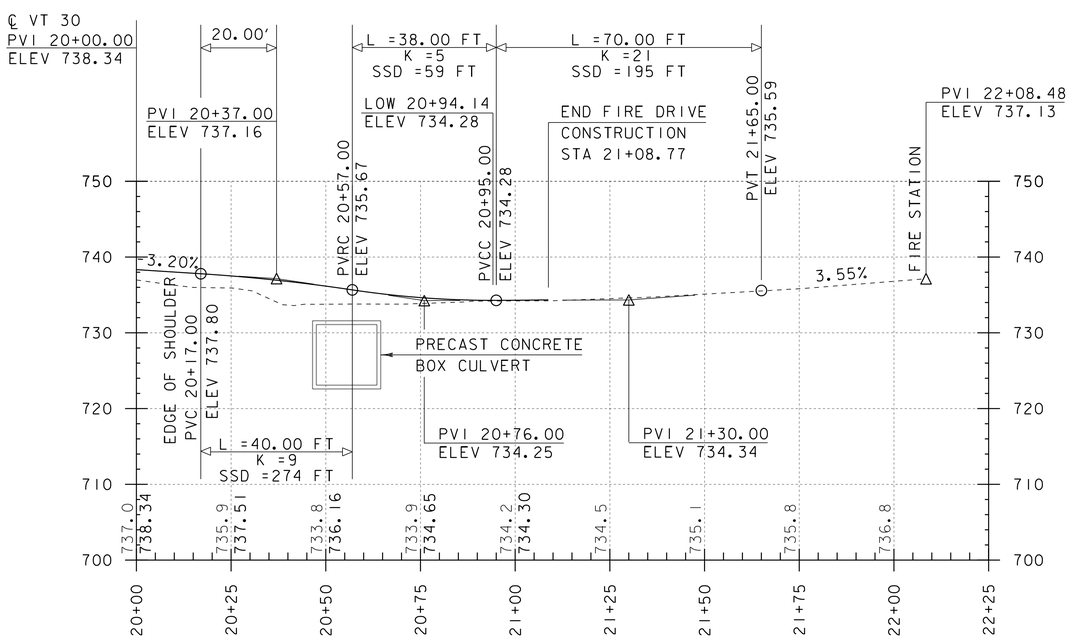

FIRE DRIVE PROFILE

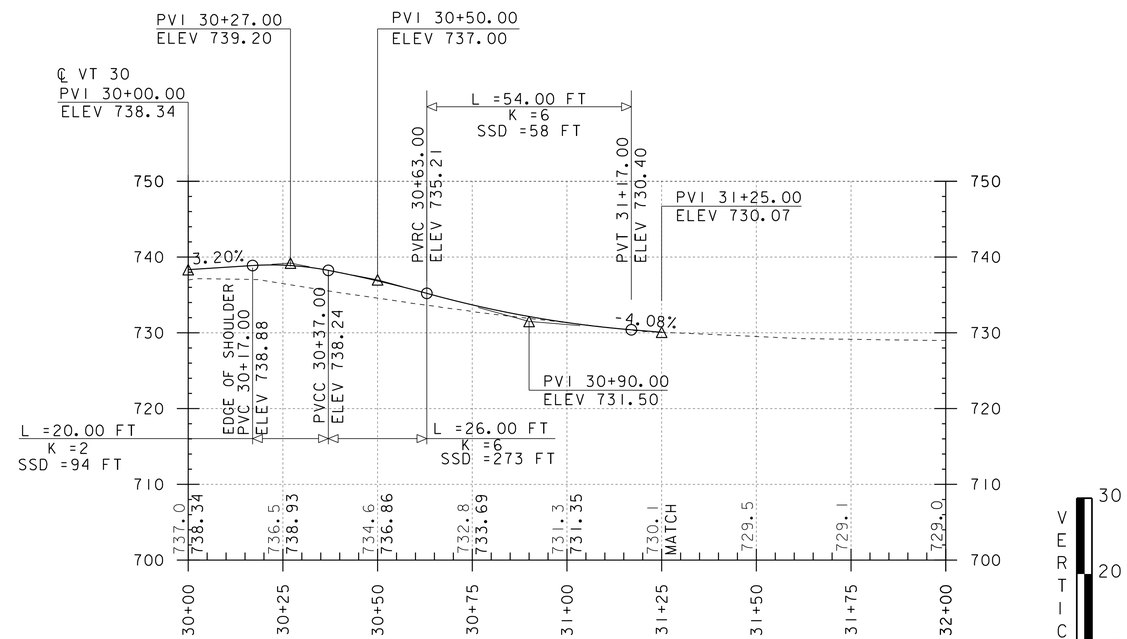

WATER STREET PROFILE

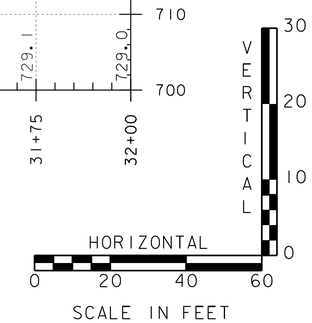

THE GRADES SHOWN TO THE NEAREST TENTH ARE THE ORIGINAL GROUND ELEVATIONS ALONG THE PROPOSED ALIGNMENT.

THE GRADES SHOWN TO THE NEAREST HUNDREDTH ARE THE FINISH GRADES ALONG THE PROPOSED ALIGNMENT.

PROJECT NAME: JAMAICA	
PROJECT NUMBER: ER-BRF 015-1(23)	
FILE NAME: s11b316.pro.dgn	PLOT DATE: 07-DEC-2012
PROJECT LEADER: K. HIGGINS	DRAWN BY: K. FRIEDLAND
DESIGNED BY: G. LAROCHE	CHECKED BY: G. LAROCHE
FIRE DRIVE & WATER STREET PROFILES	SHEET 17 OF 82

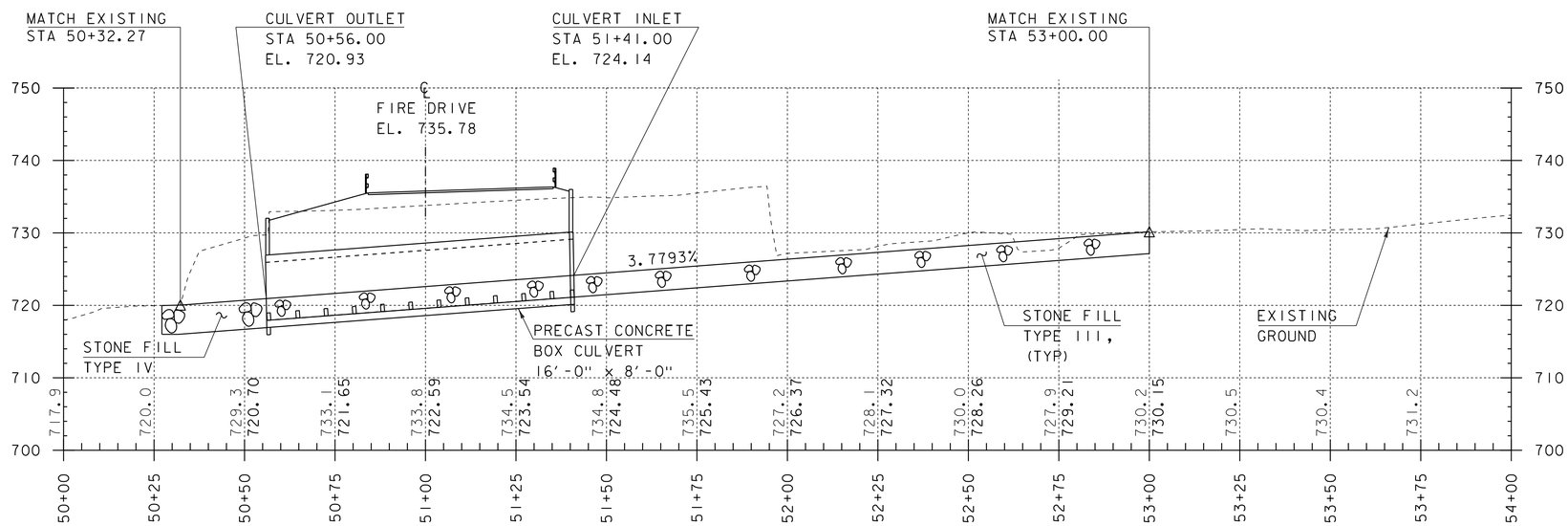

BOX CULVERT PROFILE

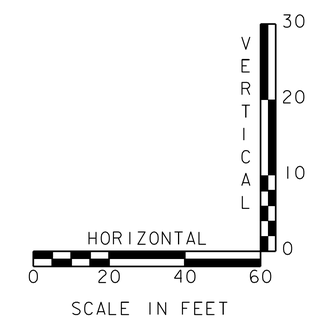

THE GRADES SHOWN TO THE NEAREST TENTH ARE THE ORIGINAL GROUND ELEVATIONS ALONG THE PROPOSED ALIGNMENT.

THE GRADES SHOWN TO THE NEAREST HUNDREDTH ARE THE FINISH GRADES ALONG THE PROPOSED ALIGNMENT.

PROJECT NAME: JAMAICA	
PROJECT NUMBER: ER-BRF 015-1(23)	
FILE NAME: s11b316.pro.dgn	PLOT DATE: 07-DEC-2012
PROJECT LEADER: K. HIGGINS	DRAWN BY: K. FRIEDLAND
DESIGNED BY: G. LAROCHE	CHECKED BY: G. LAROCHE
BOX CULVERT PROFILE	SHEET 18 OF 82

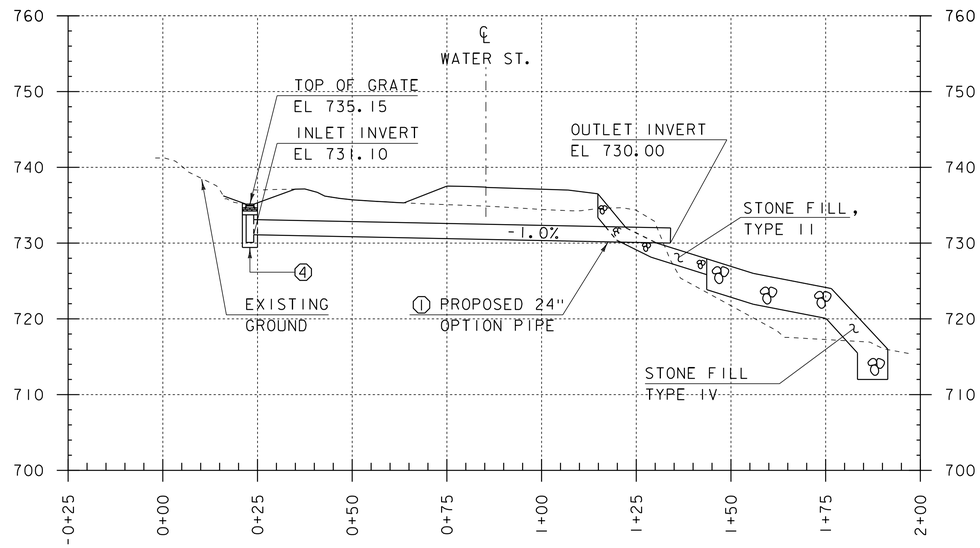

24" OPTION PIPE PROFILE
STA 211+60.52 - 212+61.85 RT

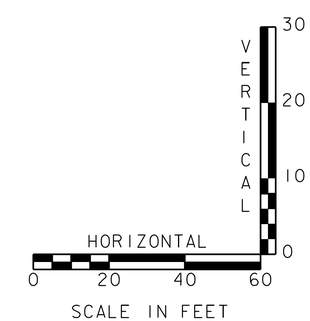

PROJECT NAME: JAMAICA	
PROJECT NUMBER: ER-BRF 015-1(23)	
FILE NAME: s11b316.pro.dgn	PLOT DATE: 07-DEC-2012
PROJECT LEADER: K. HIGGINS	DRAWN BY: K. FRIEDLAND
DESIGNED BY: G. LAROCHE	CHECKED BY: G. LAROCHE
DRAINAGE PIPE PROFILE	SHEET 19 OF 82

STATE OF VERMONT
AGENCY OF TRANSPORTATION

DRAINAGE DETAIL SHEET

STATION	STATION	POS.	ASKEW	INLET/OUTLET TYPE		DITCH		PIPE ARCH			PIPE		ALLOWABLE OPTIONS						PIPE ELBOW	ES	CB	PRC	DI	DEPTH DI	CONC CLASS B	REINF STEEL	DI GRATE	CHAN ELEV	CRM	TRENCH EXCAVATION		COMM EXC	UNC CHAN EXC	STRUCT EXCAV	GRAN BKFILL STRUCT	GRAN BORR	EROS MATT	STONE FILL		MARKER POSTS				REMARKS
				INLET	OUTLET	IN	OUT	SPAN	RISE	L	D	L	PCCSP	CAAP	RCP	CSP	CPEP	PCCSP PI												EARTH	ROCK									LT	RT			
			NO. DEG.					IN	IN	FT	IN	FT	TH	TH	CL	TH	SL	TH	NO. DEG.	EA	EA			FT	CY	LBS	TYPE	EA	CY	CY	CY	CY	CY	CY	CY	CY	SY	CY	TYPE	EA	EA			
211+60.52	212+61.85	RT-RT	YES	DI		X	X				24	110	X	X			X													85					45					1	1		1	NEW 24" OPTION PIPE. SEE CROSS SECTION SHEETS. INLET INVERT EL. = 731.10' / OUTLET INVERT EL. = 730.00'
211+68.21	212+29.00	RT-LT																																										2	PARTIAL REMOVAL OF EXISTING 7' x 7' BOX CULVERT. SEE GENERAL NOTES.
212+61.00		RT																																										3	REMOVE EXISTING 4' x 4' DROP INLET.
212+62.00		RT																				X												15	10									4	NEW PRECAST REINFORCED CONCRETE DROP INLET WITH CAST IRON GRATE WITH FRAME. EL. = 735.15'
212+34.40	213+23.71	LT-LT																																										5	REMOVE EXISTING 96" CGMP. SEE GENERAL NOTES.
214+29.20		RT	YES																																									6	RAISE ELEVATION OF EXISTING DROP INLET TO 745.70'

PROJECT NAME: JAMAICA
PROJECT NUMBER: ER-BRF 015-1(23)

FILE NAME: s11b316.drn.dgn
PROJECT LEADER: K. HIGGINS
DESIGNED BY: G. LAROCHE
DRAINAGE DETAIL SHEET

PLOT DATE: 11/30/2012
DRAWN BY: K. FRIEDLAND
CHECKED BY: J. SALVATORI
SHEET 20 OF 82

DETECTABLE WARNING SURFACE
STA 211+83.60 RT

4 INCH WHITE LINE
STA 208+75.00 - STA 211+81.00 RT
STA 208+75.00 - STA 213+75.00 LT
STA 212+25.00 - STA 213+75.00 RT

4 INCH YELLOW LINE (DOUBLE)
STA 208+75.00 - STA 211+95.00 ℄
STA 212+35.00 - STA 213+75.00 ℄
STA 30+21.00 - SAT 30+71.00 ℄

REMOVING SIGNS
STA 211+69.00 RT
STA 211+76.60 RT
STA 211+76.90 RT
STA 213+12.00 RT
STA 213+19.40 RT (2)

TRAFFIC SIGNS, TYPE A
STA 209+90.00 LT (2)
STA 210+00.00 RT
STA 211+68.00 LT (2)
STA 211+72.50 RT
STA 212+27.00 RT (2)
STA 213+12.00 LT (3)
STA 213+12.00 RT (3)

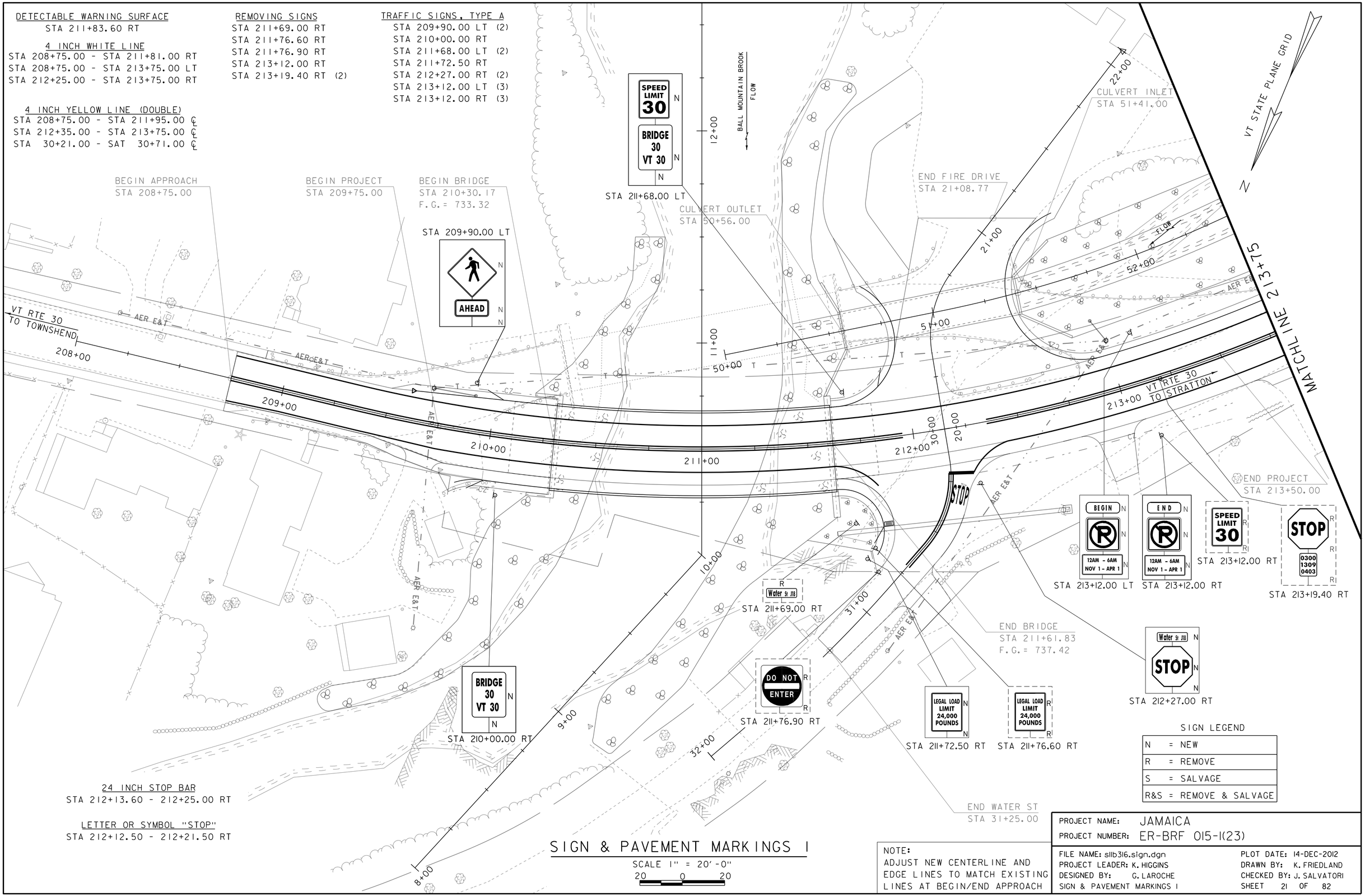

SIGN LEGEND

N	= NEW
R	= REMOVE
S	= SALVAGE
R&S	= REMOVE & SALVAGE

SIGN & PAVEMENT MARKINGS I

SCALE 1" = 20'-0"
20 0 20

NOTE:
ADJUST NEW CENTERLINE AND EDGE LINES TO MATCH EXISTING LINES AT BEGIN/END APPROACH

PROJECT NAME: JAMAICA
PROJECT NUMBER: ER-BRF 015-1(23)

FILE NAME: s11b316.sign.dgn
PROJECT LEADER: K. HIGGINS
DESIGNED BY: G. LAROCHE
SIGN & PAVEMENT MARKINGS I

PLOT DATE: 14-DEC-2012
DRAWN BY: K. FRIEDLAND
CHECKED BY: J. SALVATORI
SHEET 21 OF 82

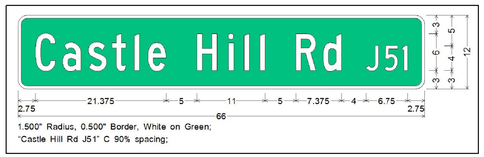

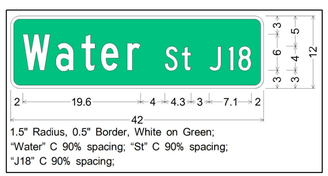

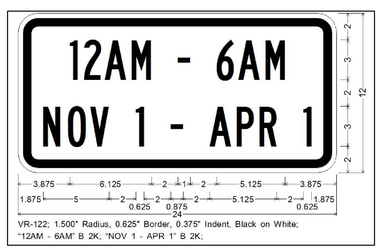

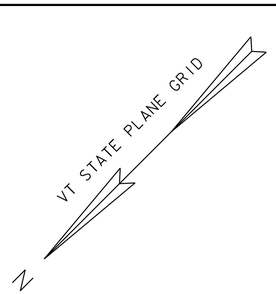

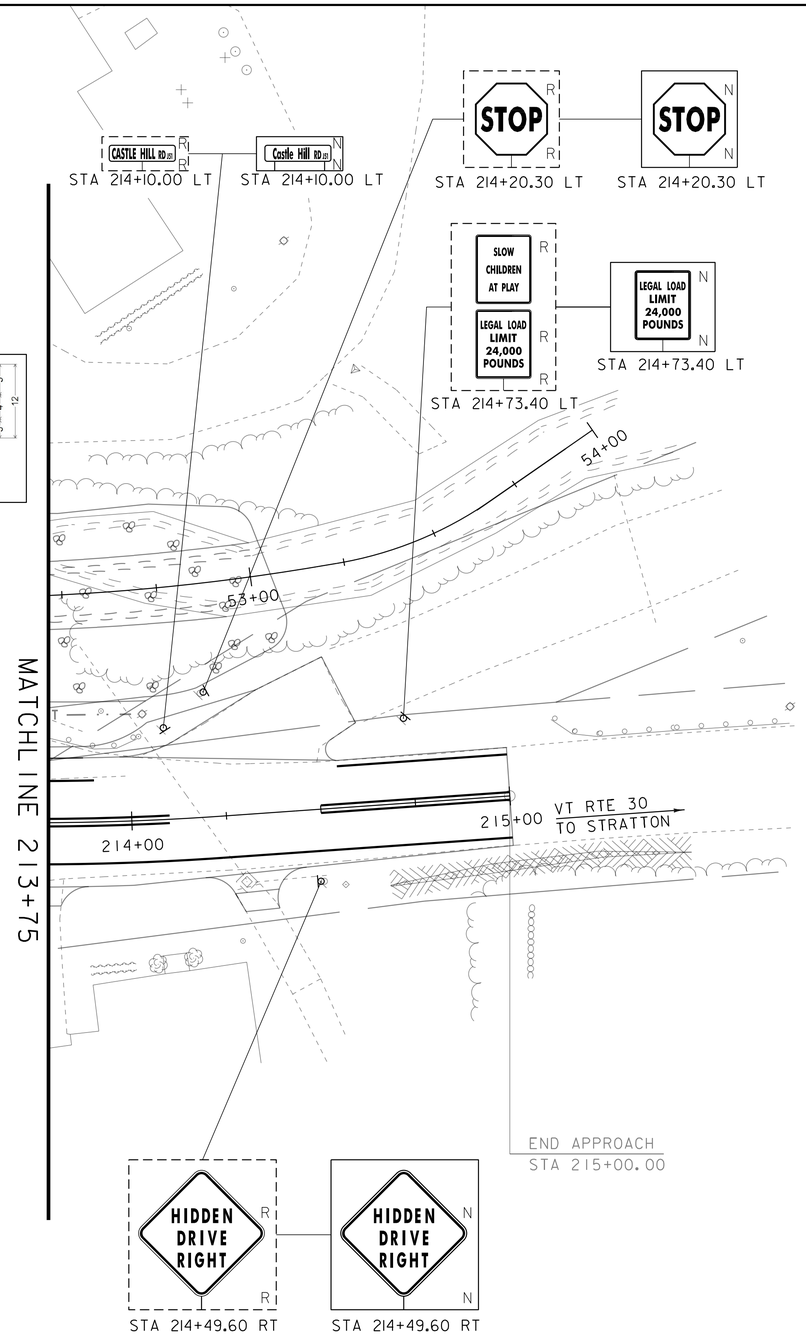

MILEMARKER OR STATION	SIGN LEGEND	SIGN DIMENSIONS WIDTH (in)	SIGN DIMENSIONS HEIGHT (in)	NEW SIGN "A"	EXIST POST RETAIN	EXIST POST SALVAGE	NO. OF POSTS	NEW SIGN POSTS SQUARE STEEL (in) 1.75 lb/ft 1.88	2.0 lb/ft 2.42	2.5 lb/ft 3.35	ANCHOR	SLEEVE	REMARKS	SIGN DETAIL DETAIL ON SHEET NUMBER	SIGN DETAIL STD. SHEET NUMBER
STA 209+90.00 LT		30	30	6.25			1		15				W11-2 (FYG)		E-152
	AHEAD	24	12	2.00									W16-9p (FYG)		E-152
STA 210+00.00 RT	BRIDGE 30 VT 30	6	8	0.33			1	7			X		VD-701		E-134
STA 211+68.00 LT	BRIDGE 30 VT 30	6	8	0.33			1		15		X		VD-701		E-134
	SPEED LIMIT 30	24	30	5.00									R2-1		SHS
STA 211+72.50 RT	LEGAL LOAD LIMIT 24,000 POUNDS	24	30	5.00			1		15		X		VR-017		E-141
STA 212+27.00 RT	Water St J18	42	12	3.50			1		15		X		D3-1	SEE THIS SHEET	SHS
	STOP	30	30	6.25									R1-1		SHS
STA 213+12.00 LT	R	24	24	4.00			1		15				R8-3		E-143
	12AM - 6AM NOV 1 - APR 1	24	10	1.67									VR-122	SEE THIS SHEET	
	BEGIN	24	12	2.00									M4-6		E-140
STA 213+12.00 RT	R	24	24	4.00			1		15				R8-3		E-143
	12AM - 6AM NOV 1 - APR 1	24	10	1.67									VR-122	SEE THIS SHEET	
	END	24	12	2.00									M4-14		E-140
STA 214+10.00 LT	Castle Hill RD J51	66	12	5.50			2		30		X		D3-1	SEE THIS SHEET	SHS
STA 214+20.30 LT	STOP	30	30	6.25			1		15		X		R1-1		SHS
STA 214+49.60 RT	HIDDEN DRIVE RIGHT	30	30	6.25			1		15		X		W9-054		E-154
STA 214+73.40 LT	LEGAL LOAD LIMIT 24,000 POUNDS	24	30	5.00			1		15		X		VR-017		E-141
FINAL POST LENGTHS ARE TO BE DETERMINED IN THE FIELD. POST SIZES ARE COMPUTED BASED ON INFORMATION FURNISHED ON THE STANDARD SHEETS AND THE VTRANS "SIGN POST DESIGN GUIDELINE."								FT 7	FT 165	FT		EA			
			TOTALS	SF 67.00					FT 172				SHS = STANDARD HIGHWAY SIGNS (MUTCD)		

REMOVING SIGNS
STA 214+10.00 LT
STA 214+20.30 LT
STA 214+49.60 RT
STA 214+73.40 LT (2)

TRAFFIC SIGNS, TYPE A
STA 214+10.00 LT
STA 214+20.30 LT
STA 214+49.60 RT
STA 214+73.40 LT

4 INCH WHITE LINE
STA 213+75.00 - STA 215+00.00 RT
STA 213+75.00 - STA 213+90.00 LT
STA 214+55.00 - STA 215+00.00 LT

4 INCH YELLOW LINE (DOUBLE)
STA 213+75.00 - STA 214+10.00 ℄
STA 214+50.00 - SAT 215+00.00 ℄

SIGN LEGEND

N	= NEW
R	= REMOVE
S	= SALVAGE
R&S	= REMOVE & SALVAGE

SIGN & PAVEMENT MARKINGS 2

SCALE 1" = 20'-0"
20 0 20

NOTE:
ADJUST NEW CENTERLINE AND EDGE LINES TO MATCH EXISTING LINES AT BEGIN/END APPROACH

PROJECT NAME: JAMAICA
PROJECT NUMBER: ER-BRF 015-1(23)

FILE NAME: s11b316.sign.dgn
PROJECT LEADER: K. HIGGINS
DESIGNED BY: G. LAROCHE
SIGN & PAVEMENT MARKINGS 2

PLOT DATE: 14-DEC-2012
DRAWN BY: K. FRIEDLAND
CHECKED BY: J. SALVATORI
SHEET 22 OF 82

EXISTING UTILITY LINE TO BE RELOCATED

EXISTING POLE AND GUY WIRE TO BE REMOVED

NEW UTILITY POLE W/ 20' GUY WIRE STA 209+70, 17' LT

EXISTING POLE TO REMAIN

EXISTING POLE AND GUY WIRE TO BE REMOVED

EXISTING POLES AND GUY WIRES TO BE REMOVED

VT STATE PLANE GRID

N

VT RTE 30 TO TOWNSHEND

VT RTE 30 TO STRATTON

BALL MOUNTAIN BROOK FLOW

ELAINE BECKWITH GALLERY FINE ART

208+00 209+00 210+00 211+00 212+00 213+00 214+00

50+00 51+00 52+00 20+00 21+00 22+00 30+00 31+00 32+00 10+00 11+00 12+00 9+00 8+00

AER E&T

EXISTING ROW

NEW UTILITY LINE

EXISTING WIRE TO BE REMOVED

EXISTING POLE AND GUY WIRE TO REMAIN

EXISTING POLE TO REMAIN

EXISTING POLE TO REMAIN

NEW UTILITY POLE W/ STREET LIGHT AND TWO 12' GUY WIRES STA 213+00, 24' LT

COMB POLE #90/1/5/410

COMB POLE #2/410/A

COMB POLE #12S

COMB POLE #13

COMB POLE 14

COMB POLE 10/414

BRACE POLE #PB12

GUY POLE

HVCTRL #120 120=VSE#200

HVCTRL #123

HVCTRL #115

HVCTRL #1964

HVCTRL #107

HVCTRL #106

HVCTRL #105

HVCTRL #111

HVCTRL #110

HVCTRL #6

HVCTRL #5

HVCTRL #8

HOUSE

BUILDING

GARAGE

SHED

PORCH

WOODS

LEDGE

GARDEN

LARGE OAK TREE

MED. MAPLE

SEPTIC TANK RISER

WELL

STONE RETAINING WALL

STONE WALL

HEAD WALL

PAVED DRIVE

PAVED DRIVEWAY

GRAVEL DRIVE

GRAVEL DRIVEWAY

CONCRETE SIDEWALK

CONCRETE STEP

WOODEN FENCE

RAIL FENCE

GUIDE POST

CURB WOOD

WALL WOOD

WATER COURSE

DRY WELL

LARGE CHERRY

SM MAPLE

MED CHERRY

LARGE OAK

SMALL CHERRY

18" CONC PIPE (GOOD)

96" CONC PIPE

CPEP PIPE

7' X 7' BOX CULVERT

GUARD RAIL

PK NAIL SET

2 SM MAPLE TREES

3 MED. PINE

2 MED. PINE

2 MED ASH

SM. APPLE (2)

SM BLACK BIRCH

MED. ELM (2)

20" MAPLE TREE

8"X8" GRANITE POST

4" LILAC (3)

2" DIA STUMP

APPLE 10" (4)

15" MAPLE

22" CEDAR

18" STONE HEADWALL

SO. GRATE

DI

PAVED SHOULDER

PROPOSED UTILITY LAYOUT

SCALE 1" = 20'-0"

20 0 20

PROJECT NAME: JAMAICA	
PROJECT NUMBER: ER-BRF 015-1(23)	
FILE NAME: sllb316u+12.dgn	PLOT DATE: 07-DEC-2012
PROJECT LEADER: K. HIGGINS	DRAWN BY: K. FRIEDLAND
DESIGNED BY: J. SALVATORI	CHECKED BY: G. LAROCHE
PROPOSED UTILITY LAYOUT	SHEET 23 OF 82

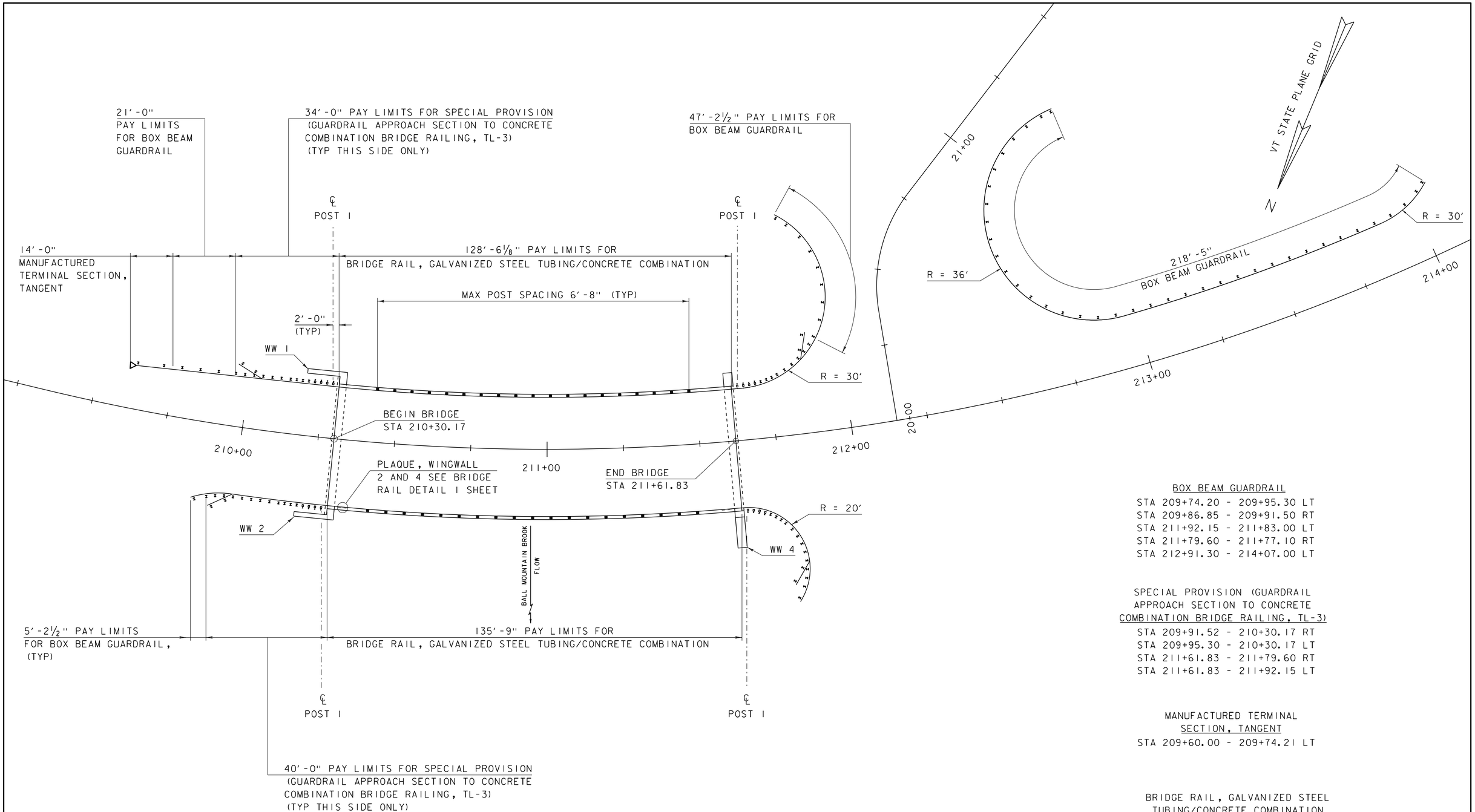

BOX BEAM GUARDRAIL

STA 209+74.20 - 209+95.30 LT
STA 209+86.85 - 209+91.50 RT
STA 211+92.15 - 211+83.00 LT
STA 211+79.60 - 211+77.10 RT
STA 212+91.30 - 214+07.00 LT

SPECIAL PROVISION (GUARDRAIL APPROACH SECTION TO CONCRETE COMBINATION BRIDGE RAILING, TL-3)

STA 209+91.52 - 210+30.17 RT
STA 209+95.30 - 210+30.17 LT
STA 211+61.83 - 211+79.60 RT
STA 211+61.83 - 211+92.15 LT

MANUFACTURED TERMINAL SECTION, TANGENT

STA 209+60.00 - 209+74.21 LT

BRIDGE RAIL, GALVANIZED STEEL TUBING/CONCRETE COMBINATION

STA 210+30.17 - 211+61.83 LT/RT

NOTES:

1) ALL DIMENSIONS ARE TAKEN ALONG THE FACE OF RAIL.

2) SEE STANDARD G-1b FOR END ASSEMBLY DETAIL.

RAIL LAYOUT

SCALE 1" = 15'-0"

PROJECT NAME: JAMAICA	
PROJECT NUMBER: ER-BRF 015-1(23)	
FILE NAME: sllb316rail.dgn	PLOT DATE: 07-DEC-2012
PROJECT LEADER: K. HIGGINS	DRAWN BY: K. FRIEDLAND
DESIGNED BY: G. LAROCHE	CHECKED BY: G. LAROCHE
RAIL LAYOUT	SHEET 24 OF 82

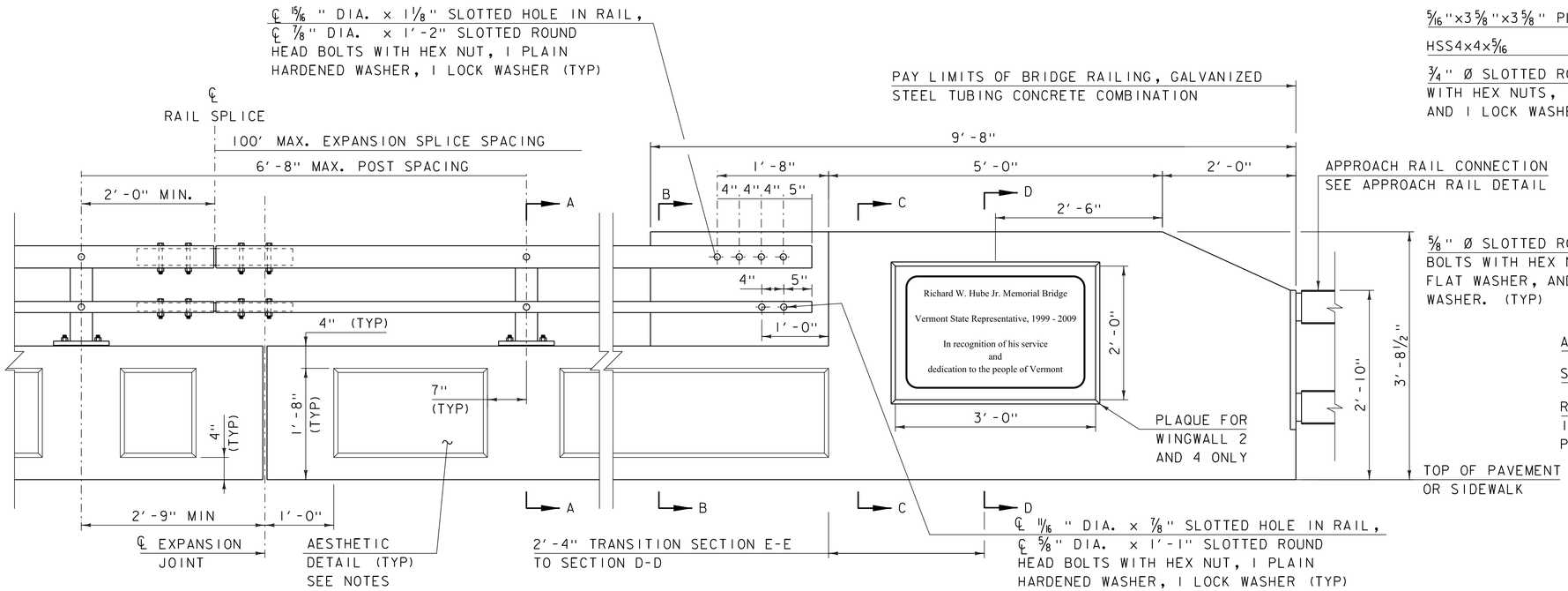

RAILING & END WALL APPROACH

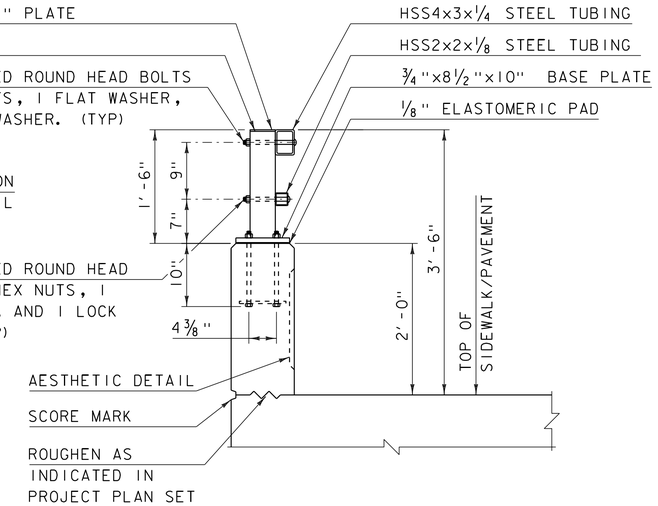

RAIL TYPICAL SECTION

NOTE:
EF = EACH FACE
3" CLEAR, UNLESS OTHERWISE
SPECIFIED ON THE PLANS.
2'-2" BAR LAP UNLESS OTHERWISE
SPECIFIED ON THE PLANS.
*** MATCH SLOPE OF NEAREST
TRANSVERSE STEEL

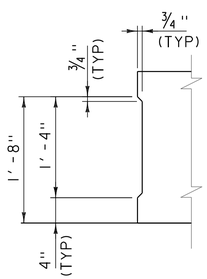

AESTHETIC DETAIL

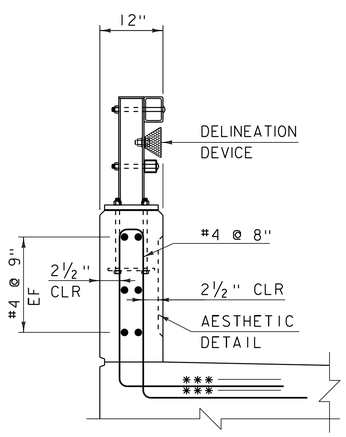

SECTION A-A

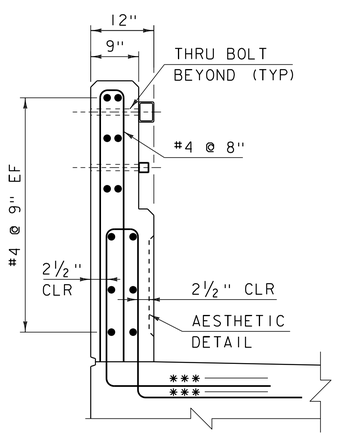

SECTION B-B

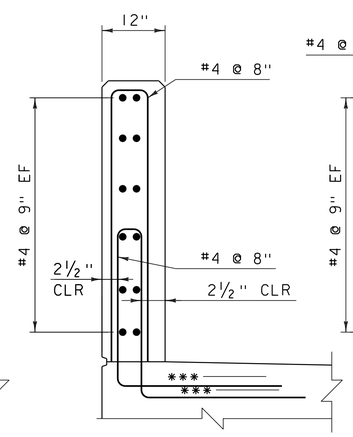

SECTION C-C

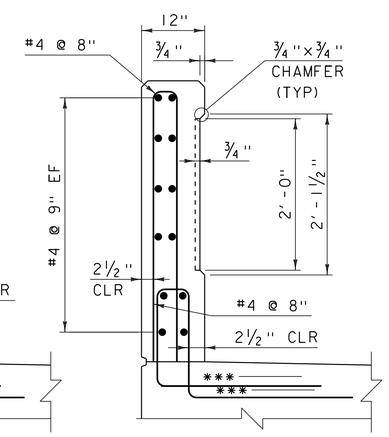

SECTION D-D

SEE STANDARDS S352-A, S352-B AND S352-C
FOR FURTHER DETAILS

PROJECT NAME: JAMAICA	
PROJECT NUMBER: ER-BRF 015-1(23)	
FILE NAME: sllb316raildet.dgn	PLOT DATE: 07-DEC-2012
PROJECT LEADER: K. HIGGINS	DRAWN BY: G. LAROCHE
DESIGNED BY: G. LAROCHE	CHECKED BY: J. SALVATORI
BRIDGE RAIL DETAILS	SHEET 25 OF 82

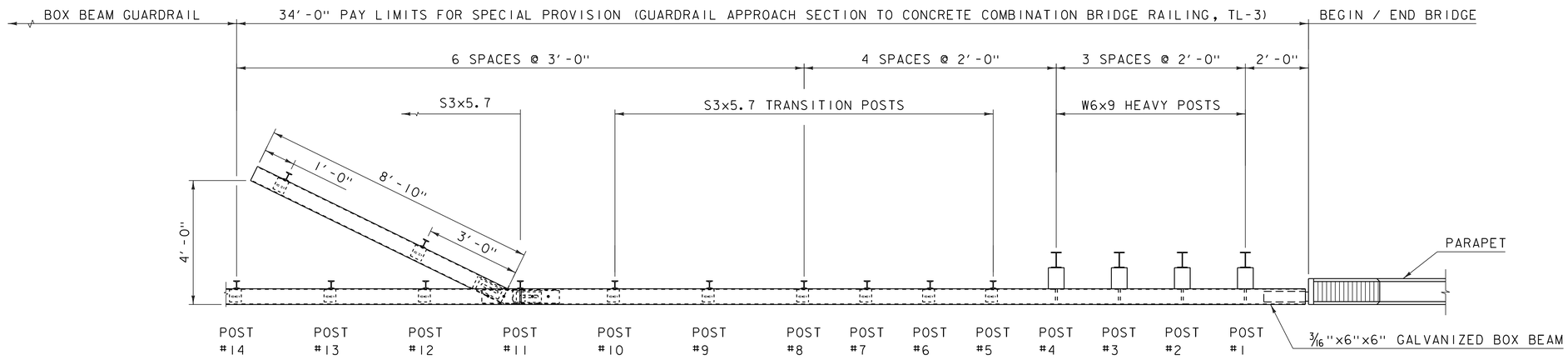

APPROACH RAIL PLAN @ WW1

(WW3 SIMILIAR BUT CURVED)
NOT TO SCALE

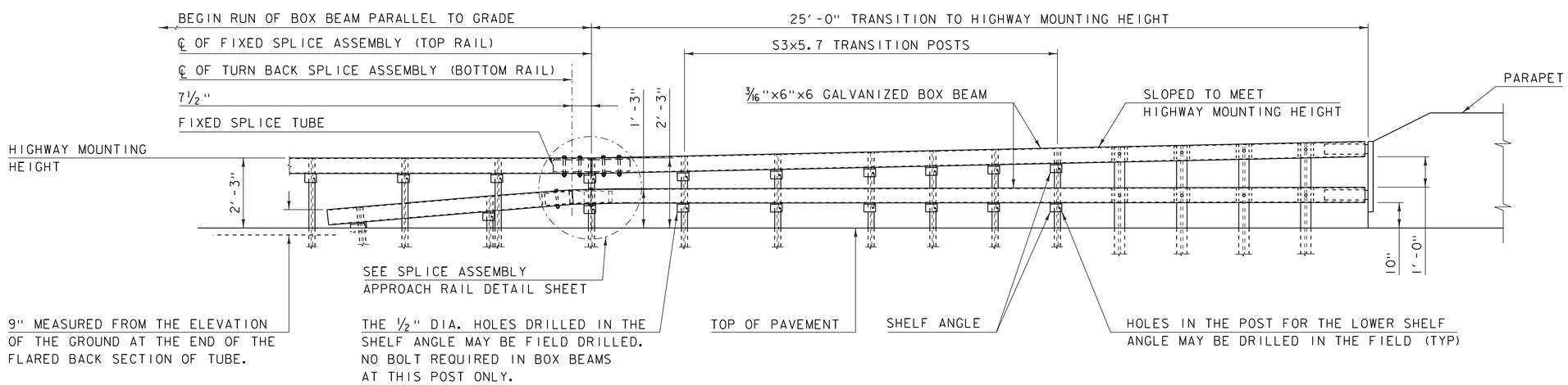

APPROACH RAIL ELEVATION

NOT TO SCALE

PROJECT NAME: JAMAICA	
PROJECT NUMBER: ER-BRF 015-1(23)	
FILE NAME: sllb316raildet.dgn	PLOT DATE: 07-DEC-2012
PROJECT LEADER: K. HIGGINS	DRAWN BY: G. LAROCHE
DESIGNED BY: G. LAROCHE	CHECKED BY: J. SALVATORI
APPROACH RAIL WW1 AND WW3	SHEET 26 OF 82

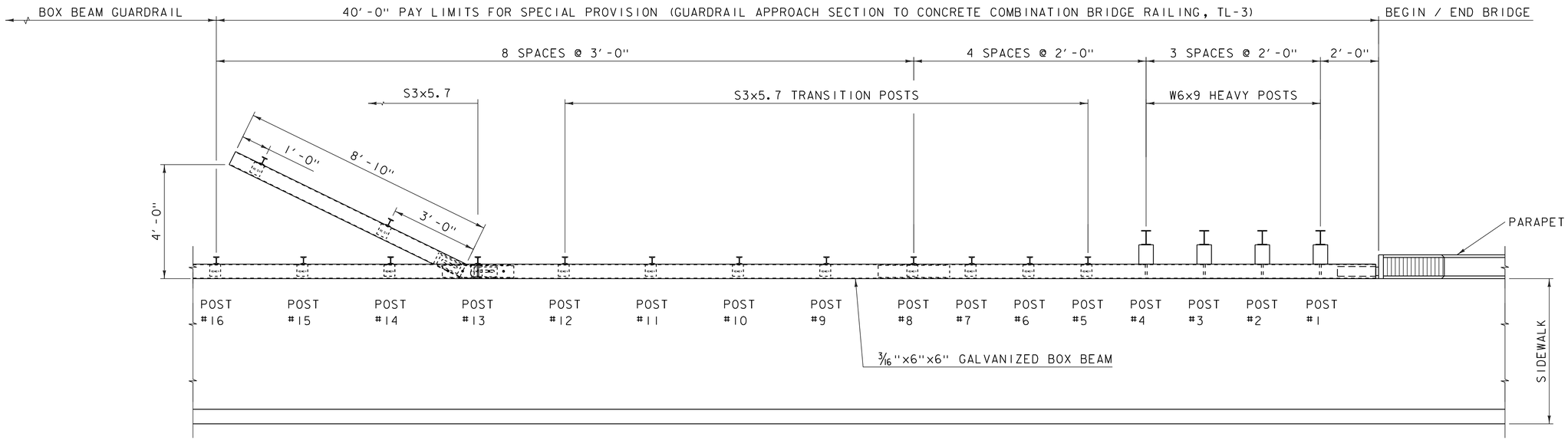

APPROACH RAIL PLAN @ WW2

(WW4 SIMILIAR BUT CURVED)
NOT TO SCALE

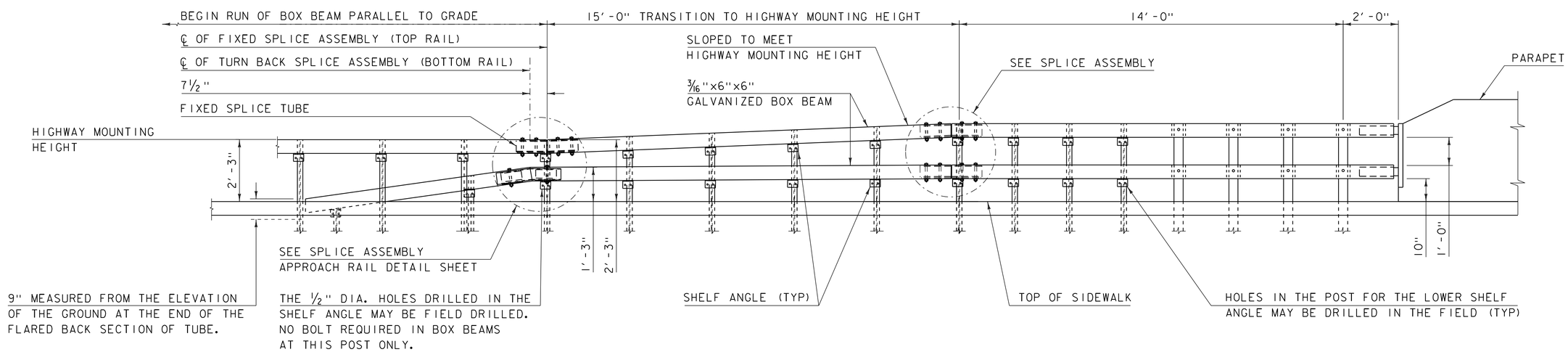

APPROACH RAIL ELEVATION

NOT TO SCALE

OTHER STANDARDS REQUIRED: G-1B

PROJECT NAME: JAMAICA	
PROJECT NUMBER: ER-BRF 015-1(23)	
FILE NAME: sllb316raildet.dgn	PLOT DATE: 07-DEC-2012
PROJECT LEADER: K. HIGGINS	DRAWN BY: G. LAROCHE
DESIGNED BY: G. LAROCHE	CHECKED BY: J. SALVATORI
APPROACH RAIL WW2 AND WW4	SHEET 27 OF 82

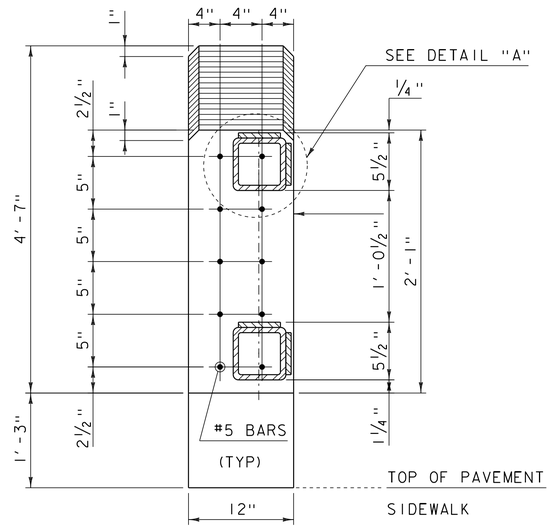

SECTION A-A

NOT TO SCALE

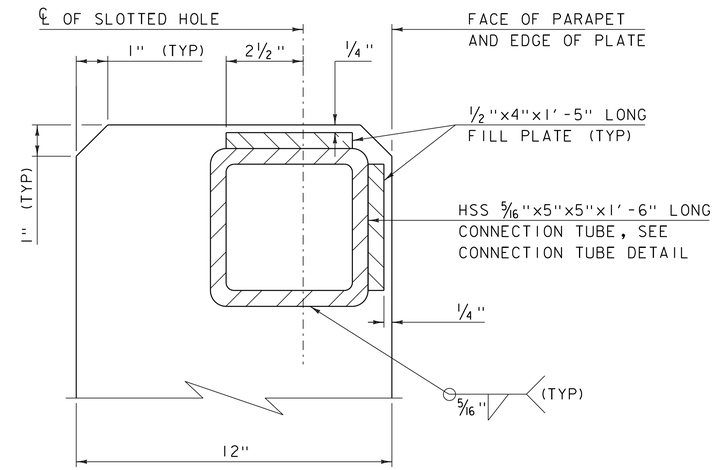

DETAIL "A"

NOT TO SCALE

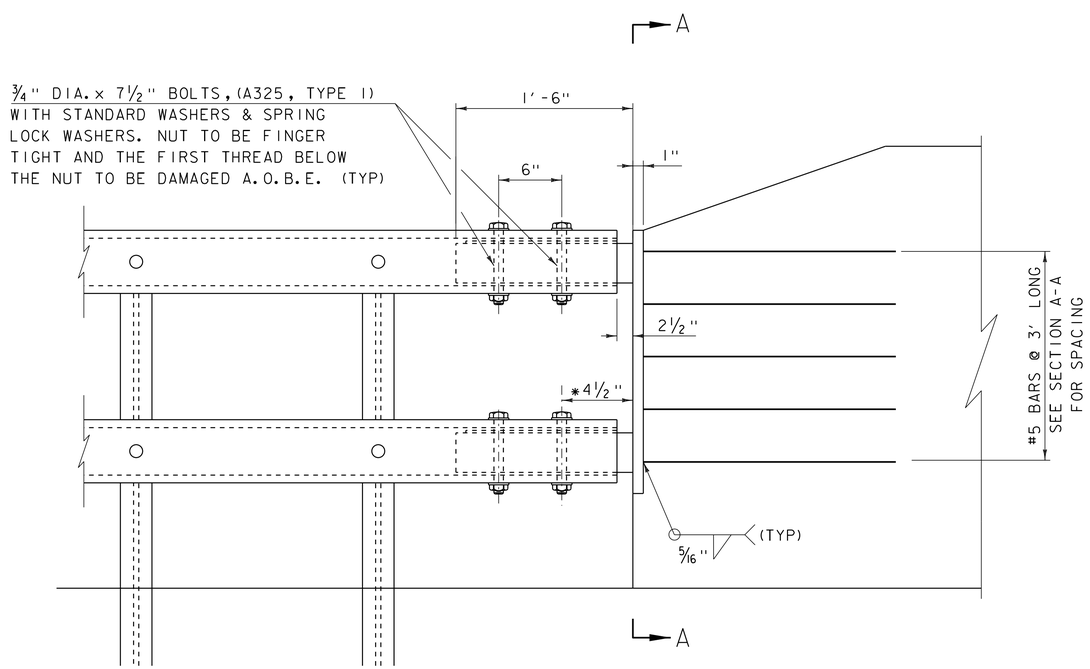

APPROACH RAIL DETAIL

WW1 - WW4

NOT TO SCALE

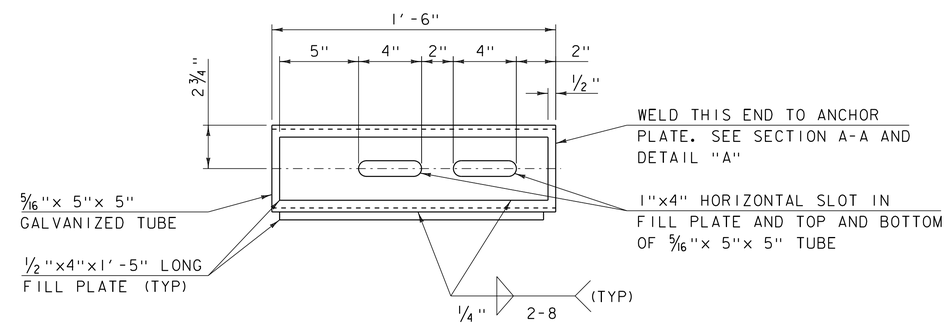

CONNECTION TUBE PLATE

PLAN VIEW

NOT TO SCALE

* AT 68°F (INCREASE DIMENSIONS IF MORE THAN 1 1/2" OF EXPANSION IS ANTICIPATED).

PROJECT NAME: JAMAICA	
PROJECT NUMBER: ER-BRF 015-1(23)	
FILE NAME: sllb316raildet.dgn	PLOT DATE: 07-DEC-2012
PROJECT LEADER: K. HIGGINS	DRAWN BY: K. FRIEDLAND
DESIGNED BY: G. LAROCHE	CHECKED BY: J. SALVATORI
APPROACH RAIL DETAILS 1	SHEET 28 OF 82

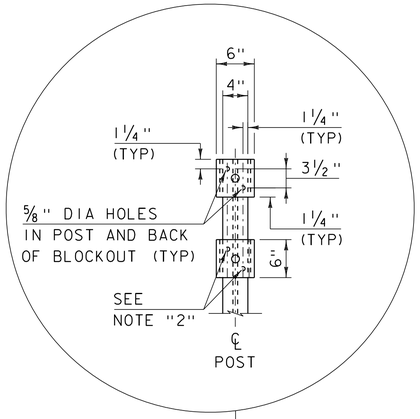

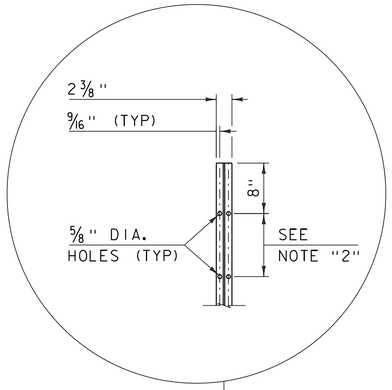

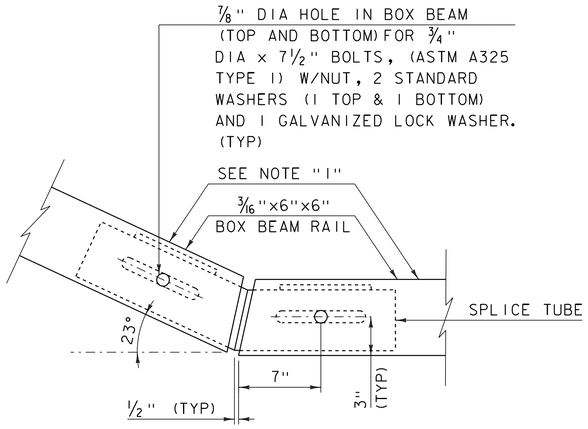

SPLICE DETAIL AT BOTTOM RAIL TURN BACK PLAN

NOT TO SCALE

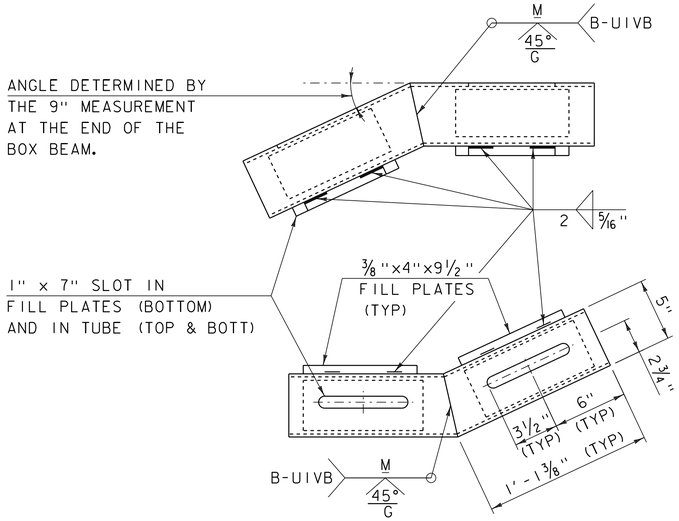

SPLICE TUBE DETAIL FOR TURN BACK

NOT TO SCALE

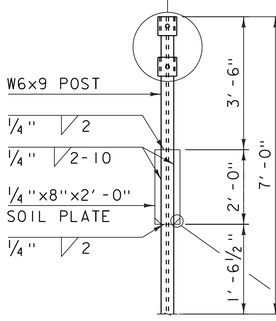

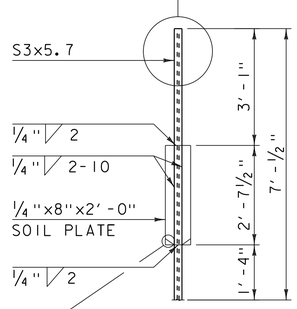

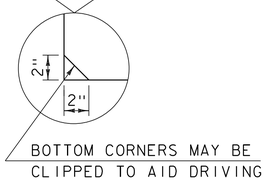

HEAVY POST DETAIL

NOT TO SCALE

TRANSITION POST DETAIL

NOT TO SCALE

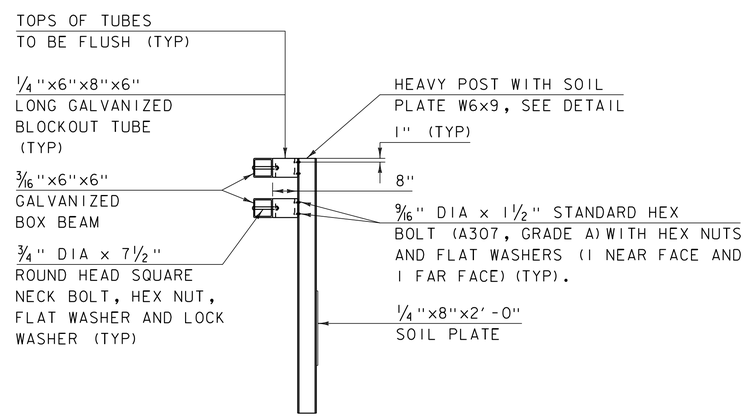

HEAVY POST ELEVATION

NOT TO SCALE

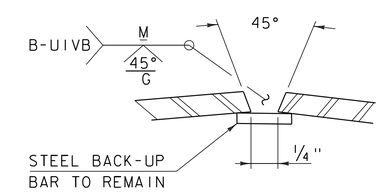

WELD DETAIL FOR SPLICE TUBE

NOT TO SCALE

NOTES:

1. PROTRUSIONS CAUSED BY WELDING OR GALVANIZING ARE NOT PERMITTED ON THE ADJOINING SURFACES OF THE BOX BEAM RAILS, SPLICE TUBES AND FILL PLATES.
2. HOLES IN POST FOR LOWER RAIL MAY BE LOCATED AND DRILLED IN THE FIELD. IF SO, GALVANIZING SHALL BE REPAIRED.

PROJECT NAME: JAMAICA	
PROJECT NUMBER: ER-BRF 015-1(23)	
FILE NAME: s11B316raildet.dgn	PLOT DATE: 07-DEC-2012
PROJECT LEADER: K. HIGGINS	DRAWN BY: K. FRIEDLAND
DESIGNED BY: G. LAROCHE	CHECKED BY: J. SALVATORI
APPROACH RAIL DETAILS 2	SHEET 29 OF 82

SOIL CLASSIFICATION

AASHTO	
A1	Gravel and Sand
A3	Fine Sand
A2	Silty or Clayey Gravel and Sand
A4	Silty Soil - Low Compressibility
A5	Silty Soil - Highly Compressible
A6	Clayey Soil - Low Compressibility
A7	Clayey Soil - Highly Compressible

ROCK QUALITY DESIGNATION

R.Q.D. (%)	ROCK DESCRIPTION
<25	Very Poor
25 to 50	Poor
51 to 75	Fair
76 to 90	Good
>90	Excellent

SHEAR STRENGTH

UNDRAINED SHEAR STRENGTH IN P.S.F.	CONSISTENCY
<250	Very Soft
250-500	Soft
500-1000	Med. Stiff
1000-2000	Stiff
2000-4000	Very Stiff
>4000	Hard

CORRELATION GUIDE OF "N" TO DENSITY/CONSISTENCY

DENSITY (GRANULAR SOILS)		CONSISTENCY (COHESIVE SOILS)	
N	DESCRIPTIVE TERM	N	DESCRIPTIVE TERM
<5	Very Loose	<2	Very Soft
5-10	Loose	2-4	Soft
11-24	Med. Dense	5-8	Med. Stiff
25-50	Dense	9-15	Stiff
>50	Very Dense	16-30	Very Stiff
		31-60	Hard
		>60	Very Hard

COMMONLY USED SYMBOLS

▼	Water Elevation
⊗	Standard Penetration Boring
⊕	Auger Boring
⊙	Rod Sounding
S	Sample
N	Standard Penetration Test Blow Count Per Foot For: 2" O.D. Sampler 1 3/8" I.D. Sampler Hammer Weight Of 140 Lbs. Hammer Fall Of 30"
VS	Field Vane Shear Test
US	Undisturbed Soil Sample
B	Blast
DC	Diamond Core
MD	Mud Drill
WA	Wash Ahead
HSA	Hollow Stem Auger
AX	Core Size 1 1/8"
BX	Core Size 1 5/8"
NX	Core Size 2 1/8"
M	Double Tube Core Barrel Used
LL	Liquid Limit
PL	Plastic Limit
PI	Plasticity Index
NP	Non Plastic
w	Moisture Content (Dry Wgt. Basis)
D	Dry
M	Moist
MTW	Moist To Wet
W	Wet
Sat	Saturated
Bo	Boulder
Gr	Gravel
Sa	Sand
Si	Silt
Cl	Clay
HP	Hardpan
Le	Ledge
NLTD	No Ledge To Depth
CNPF	Can Not Penetrate Further
TLOB	Top of Ledge Or Boulder
NR	No Recovery
Rec.	Recovery
%Rec.	Percent Recovery
RQD	Rock Quality Designation
CBR	California Bearing Ratio
<	Less Than
>	Greater Than
R	Refusal (N > 100)
VTSPG	NAD83 - See Note 7

COLOR

blk	Black	pnk	Pink
bl	Blue	pu	Purple
brn	Brown	rd	Red
dk	Dark	tn	Tan
gry	Gray	wh	White
gn	Green	yel	Yellow
lt	Light	mltc	Multicolored
or	Orange		

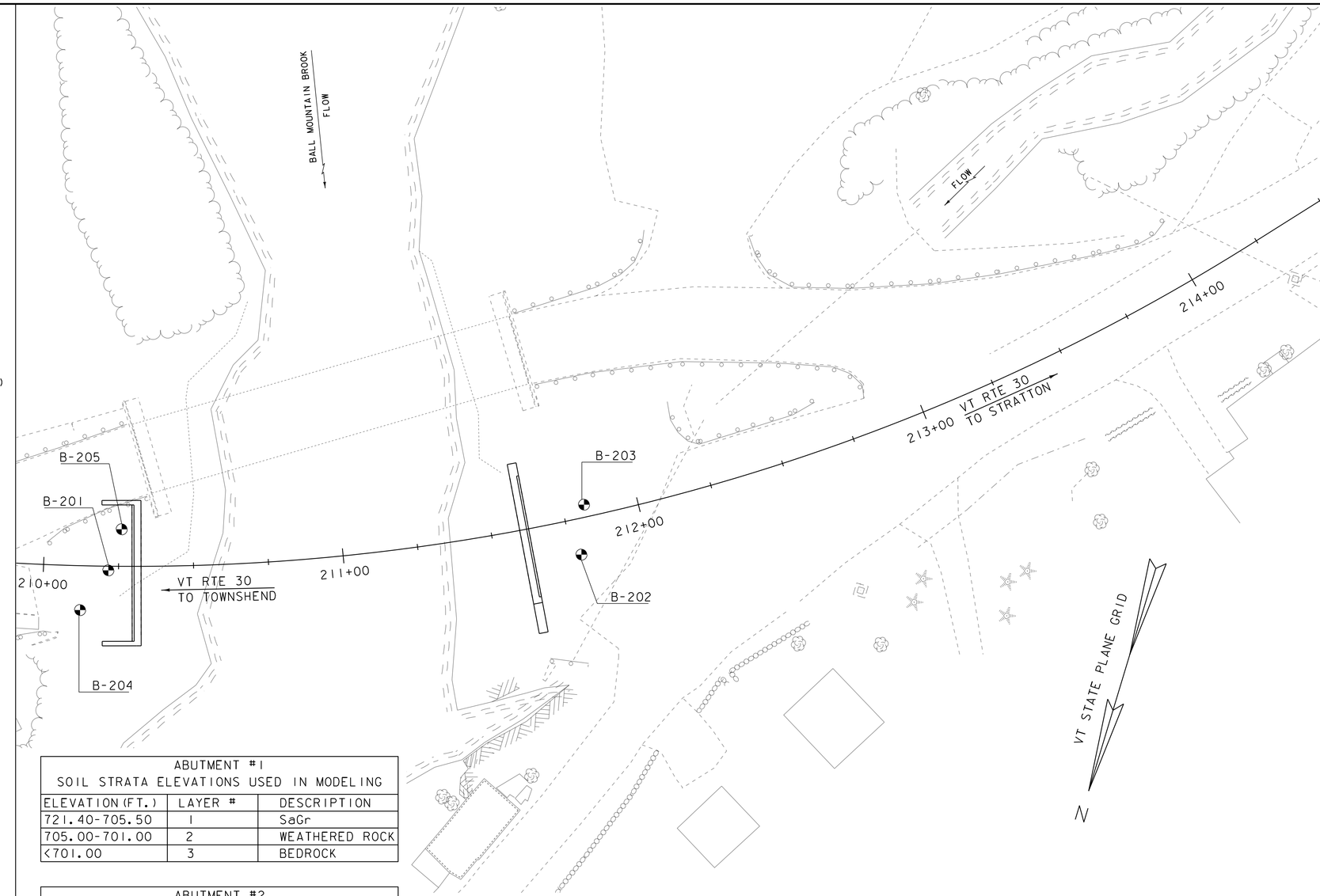

ABUTMENT #1 SOIL STRATA ELEVATIONS USED IN MODELING		
ELEVATION (FT.)	LAYER #	DESCRIPTION
721.40-705.50	1	SaGr
705.00-701.00	2	WEATHERED ROCK
<701.00	3	BEDROCK

ABUTMENT #2 SOIL STRATA ELEVATIONS USED IN MODELING		
ELEVATION (FT.)	LAYER #	DESCRIPTION
725.40-717.00	1	SaGr
<717.00	3	BEDROCK

BORING LAYOUT SHEET

SCALE 1" = 20'-0"

20 0 20

BORING CHART

HOLE NO.	SURV. STATION	OFFSET	GROUND ELEV.	ELEV. TLOB
B-201	210+22	1.4' RT	729.9	699.7
B-202	211+78	12.0' RT	735.8	717.2
B-203	211+83	4.1' LT	735.7	713.9
B-204	210+13	14.8' RT	731.9	699.4
B-205	210+26	12.4' LT	730.3	700.8

DEFINITIONS (AASHTO)

BEDROCK (LEDGE) - Rock in its native location of indefinite thickness.

BOULDER - A rock fragment with an average dimension > 12 inches.

COBBLE - Rock fragments with an average dimension between 3 and 12 inches.

GRAVEL - Rounded particles of rock < 3" and > 0.0787" (#10 sieve).

SAND - Particles of rock < 0.0787" (#10 sieve) and > 0.0029" (#200 sieve).

SILT - Soil < 0.0029" (#200 sieve), non or slightly plastic and exhibits no strength when air-dried.

CLAY - Fine grained soil, exhibits plasticity when moist and considerable strength when air-dried.

VARVED - Alternate layers of silt and clay.

HARDPAN - Extremely dense soil, cemented layer, not softened when wet.

MUCK - Soft organic soil (containing > 10% organic material.

MOISTURE CONTENT - Weight of water divided by dry weight of soil.

FLOWING SAND - Granular soil so saturated (loose) that it flows into drill casing during extraction of wash rod.

STRIKE - Angle from magnetic north to line of intersection of bed with a horizontal plane.

DIP - Inclination of bed with a horizontal plane.

GENERAL NOTES

1. The subsurface explorations shown herein were made between 11/29/11 and 12/14/11 by the Agency.
2. Soil and rock classifications, properties and descriptions are based on engineering interpretation from available subsurface information by the Agency and may not necessarily reflect actual variations in subsurface conditions that may be encountered between individual boring or sample locations.
3. Observed water levels and/or conditions indicated are as recorded at the time of exploration and may vary according to the prevailing rainfall, methods of exploration and other factors.
4. Engineering judgment was exercised in preparing the subsurface information presented herein. Analysis and interpretation of subsurface data was performed and interpreted for Agency design and estimating purposes. Presentation of the information in the Contract is intended to provide the Contractor access to the same data available to the Agency. The subsurface information is presented in good faith and is not intended as a substitute for personal investigation, independent interpretation, independent analysis or judgment by the Contractor.
5. Pictorial structure details shown on the boring plan layout or soils profile are for illustrative purposes only and may not accurately portray final contract details.
6. Terminology used on boring logs to describe the hardness, degree of weathering, and spacing of fractures, joints and other discontinuities in the bedrock is defined in the AASHTO Manual on Subsurface Investigations, 1988.
7. Northing and Easting coordinates are shown in Vermont State Plane Grid North American Datum 1983 in meters and survey feet.

PROJECT NAME: JAMAICA
PROJECT NUMBER: ER-BRF 015-1(23)

FILE NAME: s11b316bor.dgn
PROJECT LEADER: K. HIGGINS
DESIGNED BY: G. LAROCHE
BORING LAYOUT SHEET

PLOT DATE: 07-DEC-2012
DRAWN BY: K. FRIEDLAND
CHECKED BY: G. LAROCHE
SHEET 30 OF 82

STATE OF VERMONT
AGENCY OF TRANSPORTATION
MATERIALS & RESEARCH SECTION
SUBSURFACE INFORMATION

BORING LOG

JAMAICA
ER-BRF 015-1(23)
VT-30 BR-19

Boring No.: B-201
Page No.: 1 of 1
Pin No.: 11B316
Checked By: CEE

Boring Crew: GARROW, SALISBURY, PORTER
Date Started: 11/30/11 Date Finished: 12/01/11
VTSPG NAD83: N 218670.70 ft E 1565101.60 ft
Station: 210+22 Offset: 1.4' RT
Ground Elevation: 729.9 ft

	Casing	Sampler
Type:	WB	SS
I.D.:	4 in	1.5 in
Hammer Wt:	N.A.	140 lb.
Hammer Fall:	N.A.	30 in.
Hammer/Rod Type:	Auto/AWJ	
Rig:	CME 45C SKID	CE = 1.33

Groundwater Observations

Date	Depth (ft)	Notes
12/01/11	13.5	AM

Depth (ft)	Strata (1)	CLASSIFICATION OF MATERIALS (Description)	Run (Dip deg.)	Core Rec. % (RQD %)	Drill Rate minutes/ft	Blows/6" (N Value)	Moisture Content %	Gravel %	Sand %	Fines %
		A-1-b, GrSa, brn, Moist, Rec. = 1.0 ft				6-9-6-6 (15)	9.0	39.9	46.6	13.5
		A-1-b, GrSa, brn, Moist, Rec. = 1.0 ft				7-6-3-4 (9)	14.7	39.7	41.4	18.9
5		Lab Note, Lots of broken Concrete was within sample., gry-brn, Moist, Rec. = 0.8 ft				6-22-15-25 (37)	7.0	70.6	23.5	5.9
		Field Note:, NXDC, Boulder								
AB#1 BOTTOM OF PILE CAP EL. 721.35		A-2-4, GrSa with Wood & Roots, brn, Wet, Rec. = 0.5 ft				5-6-4-4 (10)	26.2	27.3	55.5	17.2
10		Visual Classification, Broken Rock with little sand, brn, Moist, Rec. = 0.5 ft				4-4-4-6 (8)	8.0			
		Field Note:, NXDC, Cobbles & Gravel								
15										
		A-1-b, SaGr, gry, Moist, Rec. = 1.0 ft				10-13-16-15 (29)	11.1	47.8	32.7	19.5
20		A-1-b, SaGr, gry, Moist, Rec. = 0.8 ft				5-15-18-30 (33)	10.1	53.3	33.5	13.2
		A-1-b, SaGr, brn-gry, Moist, Rec. = 0.8 ft				42-R@3.5"	11.2	43.7	40.5	15.8
25		A-1-b, SiSaGr, gry, Moist, Rec. = 0.9 ft				7-14-13-12 (27)	13.3	39.9	39.6	20.5
		Lab Note, Sample had very severely weathered rock that turned into fines with pressure applied., grn-brn, Moist, Rec. = 1.1 ft				9-18-R@5.0"	14.8	16.1	40.9	43.0
		Lab Note, Mostly very severely weathered rock that turned into fines with pressure applied., red-gry, Moist, Rec. = 0.4 ft				R@5.0"	13.1	3.3	66.0	30.7
30		Lab Note, SaGr, gry-blk, Moist, Rec. = 0.2 ft, Very severely Weathered Rock was witihin sample.				R@2.5"	9.6	54.8	33.9	11.3
		30.2 ft - 35.2 ft, Gray, Biotite Schist, Moderately hard, Unweathered, Good rock, NXMDC, RMR = 62	1 (30)	84 (60)	5 6 5 5 5	Top of Bedrock @ 30.2 ft				
PILE TIP EL. 696.00										
35		35.2 ft - 40.2 ft, Gray, Biotite Schist, Moderately hard, Unweathered, Good rock, NXMDC, RMR = 62	2 (30)	84 (72)	4 4 6 6 5					
40		Hole stopped @ 40.2 ft								

Notes:
1. Stratification lines represent approximate boundary between material types. Transition may be gradual.
2. N Values have not been corrected for hammer energy. CE is the hammer energy correction factor.
3. Water level readings have been made at times and under conditions stated. Fluctuations of groundwater may occur due to other factors than those present at the time measurements were made.

BORING LOG 2 JAMAICA ER-BRF 015-1(23).GPJ VERMONT AOT.GDT 1/6/12

STATE OF VERMONT
AGENCY OF TRANSPORTATION
MATERIALS & RESEARCH SECTION
SUBSURFACE INFORMATION

BORING LOG

JAMAICA
ER-BRF 015-1(23)
VT-30 BR-19

Boring No.: B-202
Page No.: 1 of 1
Pin No.: 11B316
Checked By: CEE

Boring Crew: GARROW, SALISBURY, PORTER
Date Started: 11/29/11 Date Finished: 11/30/11
VTSPG NAD83: N 218620.10 ft E 1564952.10 ft
Station: 211+78 Offset: 12.0' RT
Ground Elevation: 735.8 ft

	Casing	Sampler
Type:	WB	SS
I.D.:	4 in	1.5 in
Hammer Wt:	N.A.	140 lb.
Hammer Fall:	N.A.	30 in.
Hammer/Rod Type:	Auto/AWJ	
Rig:	CME 45C SKID	CE = 1.33

Groundwater Observations

Date	Depth (ft)	Notes
11/30/11	7.0	AM

Depth (ft)	Strata (1)	CLASSIFICATION OF MATERIALS (Description)	Run (Dip deg.)	Core Rec. % (RQD %)	Drill Rate minutes/ft	Blows/6" (N Value)	Moisture Content %	Gravel %	Sand %	Fines %
		A-1-a, SaGr, brn, MTW, Rec. = 0.8 ft				5-20-30-25 (50)	9.5	58.3	33.8	7.9
		Field Note:, NXDC, Cobbles & Gravel								
5		A-1-a, SaGr, gry, Moist, Rec. = 0.4 ft				6-6-3-3 (9)	21.9	64.8	29.3	5.9
		Field Note:, NXDC, Gravel & Sand								
AB#2 BOTTOM OF PILE CAP EL. 725.40		Visual Classification, Broken Rock, brn-gry, Moist, Rec. = 0.2 ft, Insufficient sample for testing.				2-1-2-3 (3)				
		Field Note:, NXDC, Boulder & Cobbles								
15		A-1-a, SaGr, gry, Moist, Rec. = 0.6 ft				7-7-7-9 (14)	9.1	49.9	42.2	7.9
20		18.6 ft - 23.6 ft, Light gray, Quartzite, with zones of large porphyroblasts of plagioclase feldspar. Very hard, Unweathered, Good rock, NXMDC, RMR = 62	1 (40)	90 (68)	4 5 5 5 5	Top of Bedrock @ 18.6 ft				
PILE TIP EL. 714.00										
25		23.6 ft - 28.6 ft, Light gray, Quartzite, with zones of large porphyroblasts of plagioclase feldspar. Very hard, Unweathered, Fair rock, NXMDC, RMR = 49	2 (40)	100 (40)	5 4 4 4 10					
30		Hole stopped @ 28.6 ft								
35										

Notes:
1. Stratification lines represent approximate boundary between material types. Transition may be gradual.
2. N Values have not been corrected for hammer energy. CE is the hammer energy correction factor.
3. Water level readings have been made at times and under conditions stated. Fluctuations of groundwater may occur due to other factors than those present at the time measurements were made.

BORING LOG 2 JAMAICA ER-BRF 015-1(23).GPJ VERMONT AOT.GDT 1/6/12

PROJECT NAME: JAMAICA
PROJECT NUMBER: ER-BRF 015-1(23)

FILE NAME: s11b316.boring.dgn
PROJECT LEADER: K. HIGGINS
DESIGNED BY: G. LAROCHE
BORING LOGS 1

PLOT DATE: 07-DEC-2012
DRAWN BY: K. FRIEDLAND
CHECKED BY: G. LAROCHE
SHEET 31 OF 82

STATE OF VERMONT
AGENCY OF TRANSPORTATION
MATERIALS & RESEARCH SECTION
SUBSURFACE INFORMATION

BORING LOG

JAMAICA
ER-BRF 015-1(23)
VT-30 BR-19

Boring No.: B-203
Page No.: 1 of 1
Pin No.: 11B316
Checked By: CEE

Boring Crew: GARROW, SALISBURY, PORTER
Date Started: 12/02/11 Date Finished: 12/03/11
VTSPG NAD83: N 218603.90 ft E 1564956.10 ft
Station: 211+83 Offset: 4.1' LT
Ground Elevation: 735.7 ft

	Casing	Sampler
Type:	WB	SS
I.D.:	4 in	1.5 in
Hammer Wt:	N.A.	140 lb.
Hammer Fall:	N.A.	30 in.
Hammer/Rod Type:	Auto/AWJ	
Rig:	CME 45C SKID	CE = 1.33

Groundwater Observations

Date	Depth (ft)	Notes
		Not taken.

Depth (ft)	Strata (1)	CLASSIFICATION OF MATERIALS (Description)	Blows/6" (N Value)	Moisture Content %	Gravel %	Sand %	Fines %
		Field Class:, Coarse Gravel					
		Field Note:, NXDC, Cobbles					
5		Field Class:, Coarse Gravel					
10		Field Class:, Sandy Gravel, Old Ground at 15.0 ft.					
15		Field Class:, Silty Sand					
20		Field Note:, NXDC, Cobbles					
		Hole stopped @ 21.8 ft Possible Bedrock.					

AB#2
BOTTOM OF
PILE CAP
EL. 725.40

PILE TIP
EL. 711.00

Notes:
1. Stratification lines represent approximate boundary between material types. Transition may be gradual.
2. N Values have not been corrected for hammer energy. CE is the hammer energy correction factor.
3. Water level readings have been made at times and under conditions stated. Fluctuations of groundwater may occur due to other factors than those present at the time measurements were made.

BORING LOG 2 JAMAICA ER-BRF 015-1(23).GPJ VERMONT AOT.GDT 1/6/12

STATE OF VERMONT
AGENCY OF TRANSPORTATION
MATERIALS & RESEARCH SECTION
SUBSURFACE INFORMATION

BORING LOG

JAMAICA
ER-BRF 015-1(23)
VT-30 BR-19

Boring No.: B-204
Page No.: 1 of 1
Pin No.: 11B316
Checked By: CEE

Boring Crew: GARROW, SALISBURY
Date Started: 12/13/11 Date Finished: 12/14/11
VTSPG NAD83: N 218686.10 ft E 1565106.80 ft
Station: 210+13 Offset: 14.8' RT
Ground Elevation: 731.9 ft

	Casing	Sampler
Type:	WB	
I.D.:	4 in	
Hammer Wt:	N.A.	N.A.
Hammer Fall:	N.A.	N.A.
Hammer/Rod Type:		
Rig:	CME 45C SKID	CE =

Groundwater Observations

Date	Depth (ft)	Notes
12/14/11	14.2	Casing Pulled.

Depth (ft)	Strata (1)	CLASSIFICATION OF MATERIALS (Description)	Blows/6" (N Value)	Moisture Content %	Gravel %	Sand %	Fines %
		Field Class:, SaGr					
		Field Class:, Cobbles					
5		Field Class:, GrSa					
		Field Class:, NXDC, Cobbles					
		Field Class:, NXDC, Cobbles, A section of plywood was found in this area.					
10		Field Class:, NXDC, Cobbles					
15		Field Class:, Sa					
20		Field Class:, Weathered Rock					
25							
30							
		Hole stopped @ 32.5 ft Possible Bedrock.					
35							

AB#1
BOTTOM OF
PILE CAP
EL. 721.35

PILE TIP
EL. 696.50

Notes:
1. Stratification lines represent approximate boundary between material types. Transition may be gradual.
2. N Values have not been corrected for hammer energy. CE is the hammer energy correction factor.
3. Water level readings have been made at times and under conditions stated. Fluctuations of groundwater may occur due to other factors than those present at the time measurements were made.

BORING LOG 2 JAMAICA ER-BRF 015-1(23).GPJ VERMONT AOT.GDT 1/6/12

PROJECT NAME: JAMAICA
PROJECT NUMBER: ER-BRF 015-1(23)

FILE NAME: s11b316.boring.dgn
PROJECT LEADER: K. HIGGINS
DESIGNED BY: G. LAROCHE
BORING LOGS 2

PLOT DATE: 07-DEC-2012
DRAWN BY: K. FRIEDLAND
CHECKED BY: G. LAROCHE
SHEET 32 OF 82

STATE OF VERMONT
AGENCY OF TRANSPORTATION
MATERIALS & RESEARCH SECTION
SUBSURFACE INFORMATION

BORING LOG

JAMAICA
ER-BRF 015-1(23)
VT-30 BR-19

Boring No.: B-205
Page No.: 1 of 1
Pin No.: 11B316
Checked By: CEE

Boring Crew: GARROW, SALISBURY
Date Started: 12/14/11 Date Finished: 12/14/11
VTSPG NAD83: N 218656.30 ft E 1565101.30 ft
Station: 210+26 Offset: 12.4' LT
Ground Elevation: 730.3 ft

	Casing	Sampler
Type:	WB	
I.D.:	4 in	
Hammer Wt:	N.A.	N.A.
Hammer Fall:	N.A.	N.A.
Hammer/Rod Type:		
Rig:	CME 45C SKID	CE =

Groundwater Observations

Date	Depth (ft)	Notes
		Hole Collapsed.
12/14/11		Open to 15 ft.

Depth (ft)	Strata (1)	CLASSIFICATION OF MATERIALS (Description)	Blows/6" (N Value)	Moisture Content %	Gravel %	Sand %	Fines %
		Field Class:, GrSa					
		Field Class:, NXDC, Cobbles					
5		Field Class:, Gr					
		Field Class:, NXDC, Concrete					
10							
		Field Class:, Sa					
		Field Class:, GrSa					
15							
		Field Class:, Sa					
20		Field Class:, NXDC, Cobbles					
		Field Class:, Sa					
25							
30		Hole stopped @ 29.5 ft Possible Bedrock.					
35							

AB#1
BOTTOM OF PILE CAP
EL. 721.35

PILE TIP
EL. 699.5

Notes:
1. Stratification lines represent approximate boundary between material types. Transition may be gradual.
2. N Values have not been corrected for hammer energy. CE is the hammer energy correction factor.
3. Water level readings have been made at times and under conditions stated. Fluctuations of groundwater may occur due to other factors than those present at the time measurements were made.

BORING LOG 2 JAMAICA ER-BRF 015-1(23).GPJ VERMONT AOT.GDT 1/6/12

PROJECT NAME: JAMAICA
PROJECT NUMBER: ER-BRF 015-1(23)

FILE NAME: s11b316.boring.dgn
PROJECT LEADER: K. HIGGINS
DESIGNED BY: G. LAROCHE
BORING LOGS 3

PLOT DATE: 07-DEC-2012
DRAWN BY: K. FRIEDLAND
CHECKED BY: G. LAROCHE
SHEET 33 OF 82

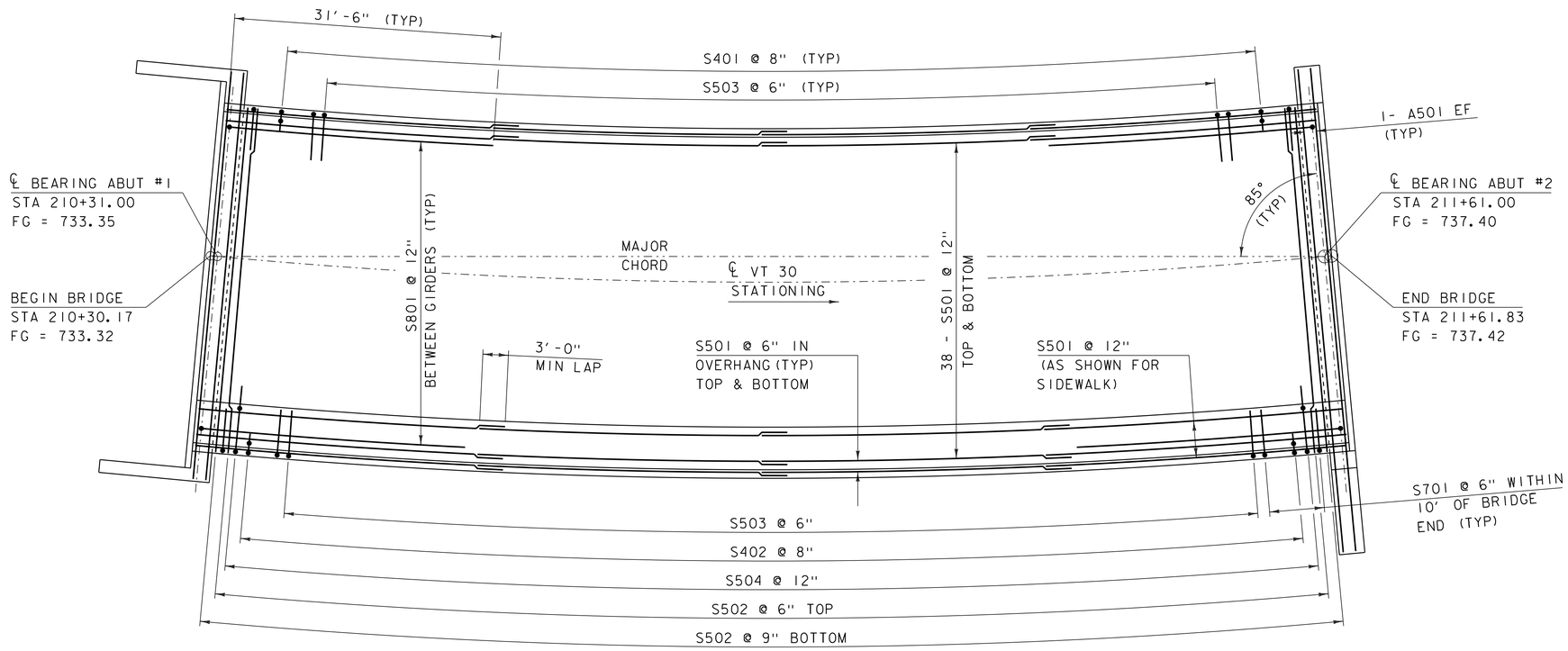

DECK REINFORCING PLAN

SCALE 1/8" = 1'-0"

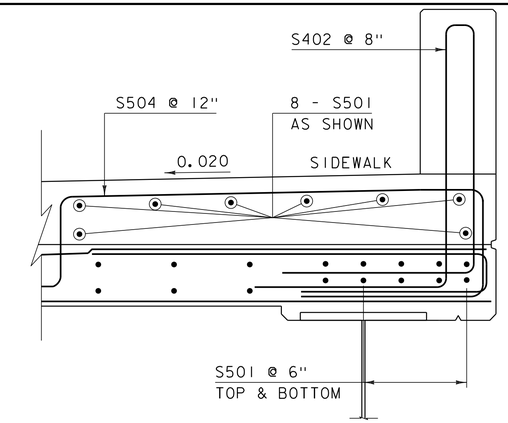

TYPICAL OVERHANG REINFORCEMENT WITH SIDEWALK

SCALE 1" = 1'-0"

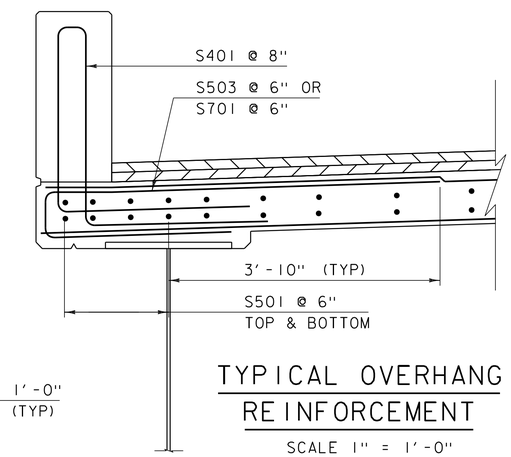

TYPICAL OVERHANG REINFORCEMENT

SCALE 1" = 1'-0"

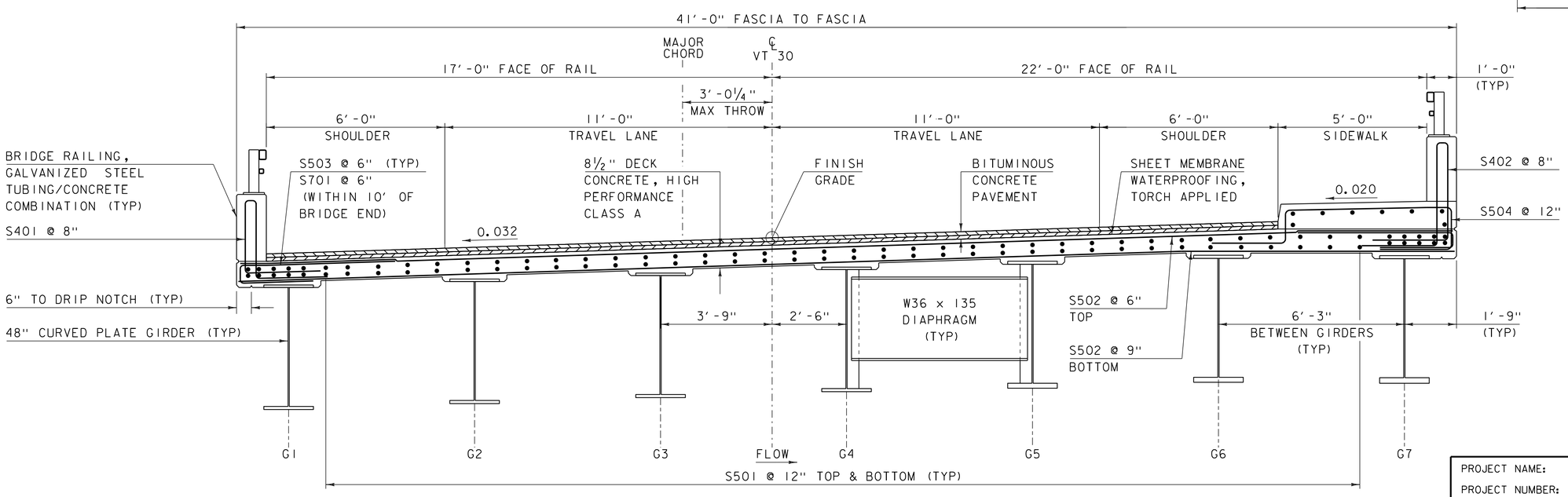

TYPICAL DECK REINFORCEMENT

SCALE 1/2" = 1'-0"

NOTE:

NF = NEAR FACE
FF = FAR FACE
EF = EACH FACE
▲ = CUT TO FIT IN FIELD
3" CLEAR, UNLESS OTHERWISE SPECIFIED ON THE PLANS.
3'-0" BAR LAP UNLESS OTHERWISE SPECIFIED ON THE PLANS.

PROJECT NAME: JAMAICA	
PROJECT NUMBER: ER-BRF 015-1(23)	
FILE NAME: sllb316sup.dgn	PLOT DATE: 07-DEC-2012
PROJECT LEADER: K. HIGGINS	DRAWN BY: K. FRIEDLAND
DESIGNED BY: G. LAROCHE	CHECKED BY: J. LACROIX
DECK REINFORCING PLAN	SHEET 34 OF 82

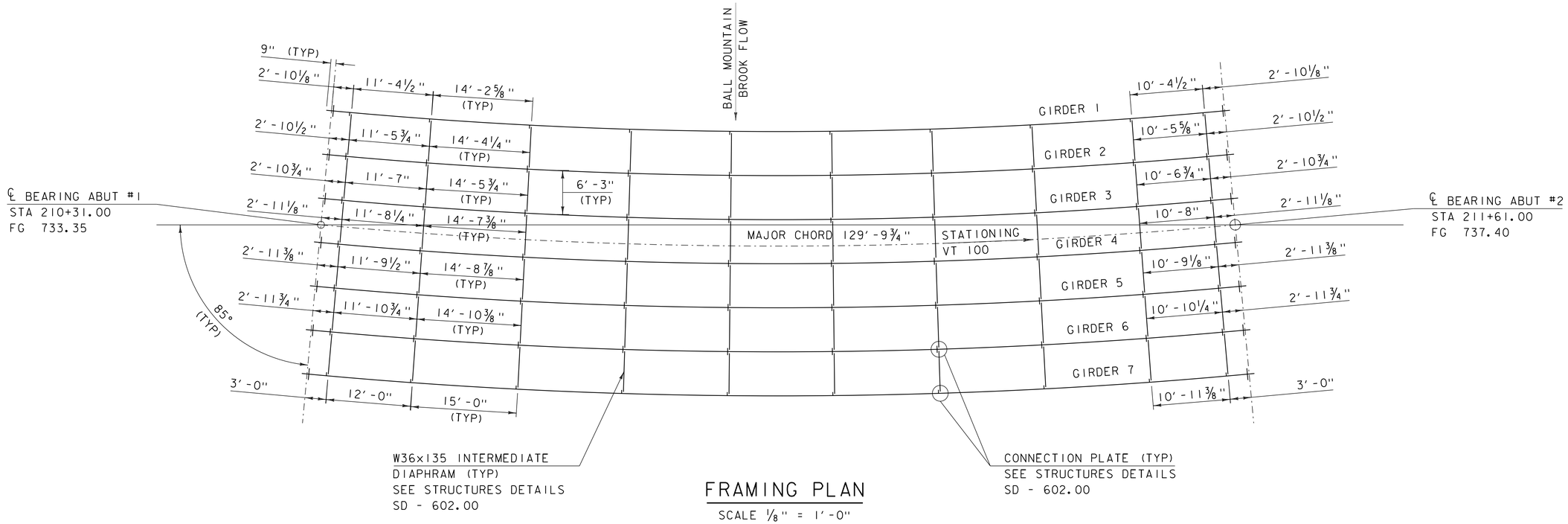

FRAMING PLAN

SCALE ⅛" = 1'-0"

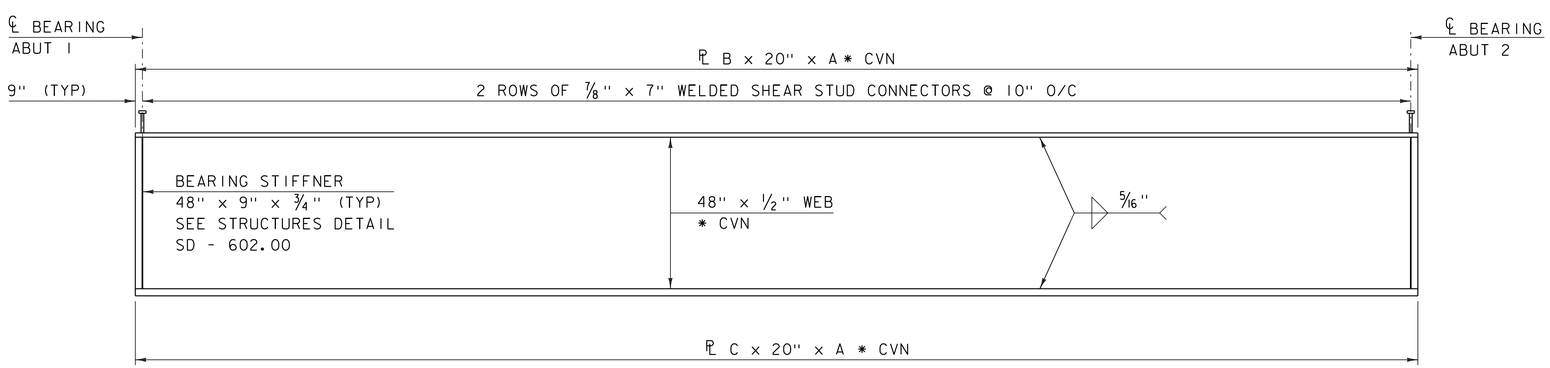

TYPICAL GIRDER ELEVATION

HORIZONTAL SCALE ⅛" = 1'-0"
VERTICAL SCALE ½" = 1'-0"

GIRDER DIMENSION TABLE				
GIRDER	RADIUS	A (LENGTH)	B TOP FLANGE PLATE THICKNESS	C BOTTOM FLANGE PLATE THICKNESS
#1	683.75'	128' - 5 3/4"	1"	1 1/4"
#2	690.00'	129' - 7 5/8"	1"	1 1/4"
#3	696.25'	130' - 9 5/8"	1"	1 1/4"
#4	702.5'	131' - 11 1/2"	1"	1 1/4"
#5	708.75'	133' - 1 1/2"	1 1/4"	2"
#6	715.00'	134' - 3 1/2"	1 1/4"	2"
#7	721.25'	135' - 5 3/8"	1 1/4"	2 1/4"

NOTES:

1. *CVN DENOTES THAT CHARPY V-NOTCH TEST IS REQUIRED.
2. ALL STEEL GRADE 50W
3. PLACE DRIP PLATE ON LOW END OF EXTERIOR GIRDERS, SEE STRUCTURES DETAILS, SD - 601.00

PROJECT NAME: JAMAICA
PROJECT NUMBER: ER-BRF 015-1(23)

FILE NAME: s11b316sup.dgn
PROJECT LEADER: K. HIGGINS
DESIGNED BY: G. LAROCHE
FRAMING PLAN & GIRDER ELEVATION

PLOT DATE: 07-DEC-2012
DRAWN BY: K. FRIEDLAND
CHECKED BY: J. LACROIX
SHEET 35 OF 82

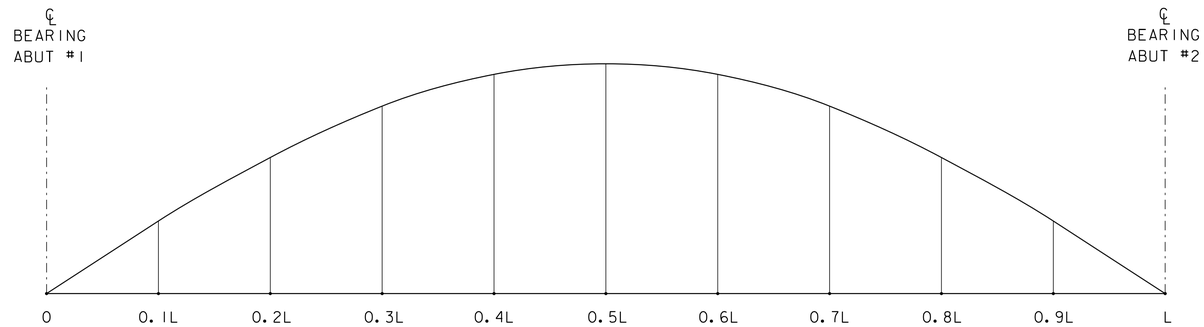

CAMBER DIAGRAM

NOT TO SCALE

Girder		0.00	0.10	0.20	0.30	0.40	0.50	0.60	0.70	0.80	0.90	1.00
1	Steel Deflection	0	7/16	7/8	1 3/16	1 3/8	1 7/16	1 3/8	1 3/16	7/8	7/16	0
	Slab & Super Deflection	0	1 1/2	2 13/16	3 7/8	4 1/2	4 3/4	4 1/2	3 7/8	2 13/16	1 1/2	0
	Total Deflection	0	1 15/16	3 11/16	5 1/16	5 7/8	6 3/16	5 7/8	5 1/16	3 11/16	1 15/16	0
	Vertical Curve Camber	0	1 7/16	2 9/16	3 5/16	3 13/16	3 15/16	3 13/16	3 5/16	2 9/16	1 7/16	0
	Total Camber	0	3 3/8	6 1/4	8 3/8	9 11/16	10 1/8	9 11/16	8 3/8	6 1/4	3 3/8	0
2	Steel Deflection	0	9/16	1	1 3/8	1 5/8	1 11/16	1 5/8	1 3/8	1	9/16	0
	Slab & Super Deflection	0	1 5/8	3 1/16	4 3/16	4 7/8	5 1/8	4 7/8	4 3/16	3 1/16	1 5/8	0
	Total Deflection	0	2 1/8	4 1/16	5 9/16	6 1/2	6 13/16	6 1/2	5 9/16	4 1/16	2 1/8	0
	Vertical Curve Camber	0	1 7/16	2 9/16	3 5/16	3 13/16	3 15/16	3 13/16	3 5/16	2 9/16	1 7/16	0
	Total Camber	0	3 9/16	6 5/8	8 7/8	10 5/16	10 3/4	10 5/16	8 7/8	6 5/8	3 9/16	0
3	Steel Deflection	0	5/8	1 3/16	1 5/8	1 7/8	1 15/16	1 7/8	1 5/8	1 3/16	5/8	0
	Slab & Super Deflection	0	1 3/4	3 1/4	4 7/16	5 3/16	5 7/16	5 3/16	4 7/16	3 1/4	1 11/16	0
	Total Deflection	0	2 5/16	4 7/16	6 1/16	7 1/16	7 7/16	7 1/16	6 1/16	4 7/16	2 5/16	0
	Vertical Curve Camber	0	1 7/16	2 9/16	3 5/16	3 13/16	3 15/16	3 13/16	3 5/16	2 9/16	1 7/16	0
	Total Camber	0	3 3/4	7	9 3/8	10 7/8	11 3/8	10 7/8	9 3/8	7	3 3/4	0
4	Steel Deflection	0	11/16	1 5/16	1 13/16	2 1/8	2 3/16	2 1/8	1 13/16	1 5/16	11/16	0
	Slab & Super Deflection	0	1 13/16	3 7/16	4 3/4	5 9/16	5 13/16	5 9/16	4 3/4	3 7/16	1 13/16	0
	Total Deflection	0	2 1/2	4 3/4	6 9/16	7 5/8	8 1/16	7 5/8	6 9/16	4 3/4	2 1/2	0
	Vertical Curve Camber	0	1 7/16	2 9/16	3 5/16	3 13/16	3 15/16	3 13/16	3 5/16	2 9/16	1 7/16	0
	Total Camber	0	3 15/16	7 5/16	9 7/8	11 7/16	12	11 7/16	9 7/8	7 5/16	3 15/16	0
5	Steel Deflection	0	3/4	1 1/2	2	2 3/8	2 1/2	2 3/8	2	1 1/2	3/4	0
	Slab & Super Deflection	0	1 15/16	3 11/16	5	5 7/8	6 3/16	5 7/8	5	3 11/16	1 15/16	0
	Total Deflection	0	2 11/16	5 1/8	7 1/16	8 1/4	8 5/8	8 1/4	7 1/16	5 1/8	2 11/16	0
	Vertical Curve Camber	0	1 7/16	2 9/16	3 5/16	3 13/16	3 15/16	3 13/16	3 5/16	2 9/16	1 7/16	0
	Total Camber	0	4 1/8	7 11/16	10 3/8	12 1/16	12 9/16	12 1/16	10 3/8	7 11/16	4 1/8	0
6	Steel Deflection	0	7/8	1 5/8	2 1/4	2 5/8	2 3/4	2 5/8	2 1/4	1 5/8	7/8	0
	Slab & Super Deflection	0	2 1/16	3 7/8	5 5/16	6 3/16	6 1/2	6 3/16	5 5/16	3 7/8	2 1/16	0
	Total Deflection	0	2 15/16	5 1/2	7 9/16	8 13/16	9 1/4	8 13/16	7 9/16	5 1/2	2 7/8	0
	Vertical Curve Camber	0	1 7/16	2 9/16	3 5/16	3 13/16	3 15/16	3 13/16	3 5/16	2 9/16	1 7/16	0
	Total Camber	0	4 3/8	8 1/16	10 7/8	12 5/8	13 3/16	12 5/8	10 7/8	8 1/16	4 5/16	0
7	Steel Deflection	0	15/16	1 13/16	2 7/16	2 7/8	3	2 7/8	2 7/16	1 13/16	15/16	0
	Slab & Super Deflection	0	2 3/16	4 1/16	5 5/8	6 9/16	6 7/8	6 9/16	5 5/8	4 1/16	2 1/8	0
	Total Deflection	0	3 1/8	5 7/8	8 1/16	9 7/16	9 15/16	9 7/16	8 1/16	5 7/8	3 1/8	0
	Vertical Curve Camber	0	1 7/16	2 9/16	3 5/16	3 13/16	3 15/16	3 13/16	3 5/16	2 9/16	1 7/16	0
	Total Camber	0	4 9/16	8 7/16	11 3/8	13 1/4	13 7/8	13 1/4	11 3/8	8 7/16	4 9/16	0

CAMBER AND DEFLECTION

(INCHES)

PROJECT NAME: JAMAICA
PROJECT NUMBER: ER-BRF 015-1(23)

FILE NAME: s11b316sup.dgn
PROJECT LEADER: K. HIGGINS
DESIGNED BY: G. LAROCHE
CAMBER & DEFLECTION

PLOT DATE: 07-DEC-2012
DRAWN BY: K. FRIEDLAND
CHECKED BY: J. LACROIX
SHEET 36 OF 82

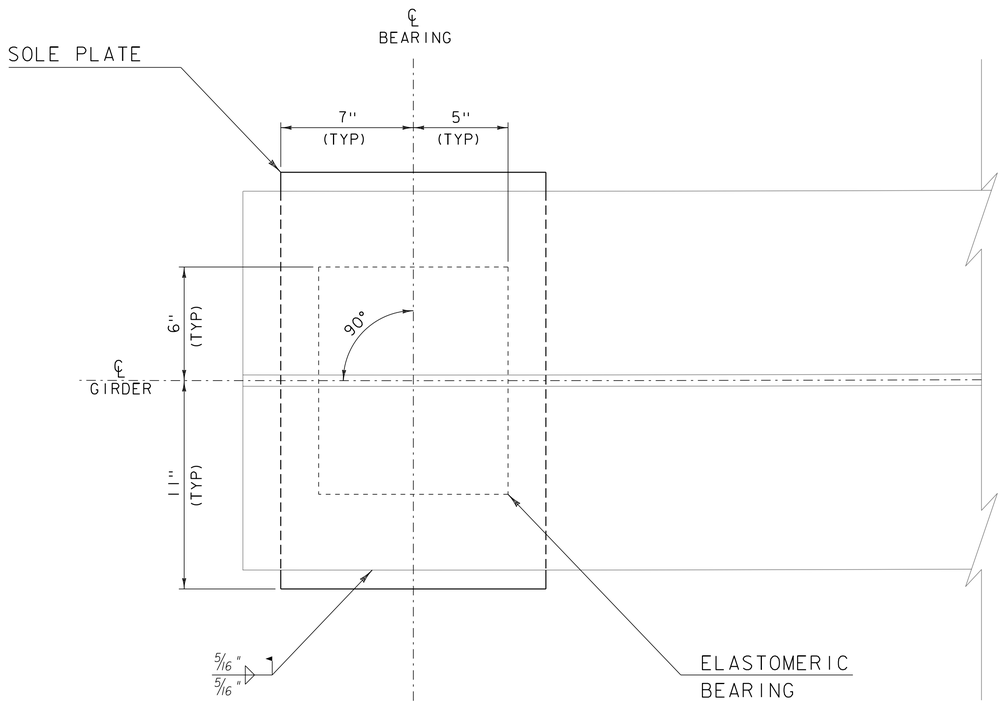

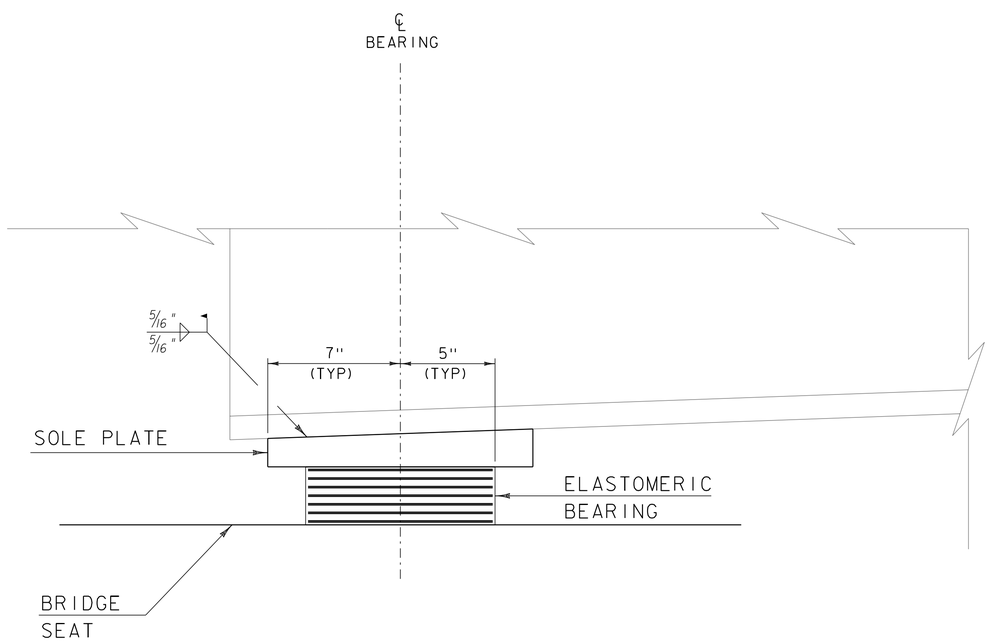

BEARING NOTES

1. BEARINGS SHALL CONFORM TO THE APPLICABLE SUBSECTIONS OF SECTIONS 531 AND 731.
2. ALL REINFORCEMENT BETWEEN LAYERS OF ELASTOMER SHALL BE STEEL MEETING THE REQUIREMENTS OF SUBSECTION 714.02. ALL INTERNAL STEEL PLATES SHALL BE SAND BLASTED AND FREE OF COATINGS, RUST AND MILL SCALE. THE PLATES SHALL BE FREE OF SHARP EDGES AND BURRS.
3. STEEL REINFORCED ELASTOMERIC BEARINGS SHALL HAVE A MINIMUM 1/8" EDGE SEAL OF ELASTOMER INTEGRAL WITH BEARING OVER ALL INTERNAL PLATES.
4. THE ELASTOMER WAS DESIGNED WITH A SHEAR MODULUS OF 100 PSI +/- 15%
5. THE CONCRETE UNDER THE BEARING DEVICE SHALL BE LEVEL.
6. THE CONTRACTOR IS ADVISED TO HAVE A MINIMUM OF 16 - 1/4"x11"x1'-1" GALVANIZED STEEL SHIMS AVAILABLE FOR USE FOR ELEVATION ADJUSTMENTS UPON THE SETTING OF THE SUPERSTRUCTURE UNITS. THE SHIMS SHALL BE FABRICATED ACCORDING TO SECTION 531 AND SHALL BE INCLUDED UNDER ITEM 531.17,"BEARING DEVICE ASSEMBLY, STEEL REINFORCED ELASTOMERIC PAD".

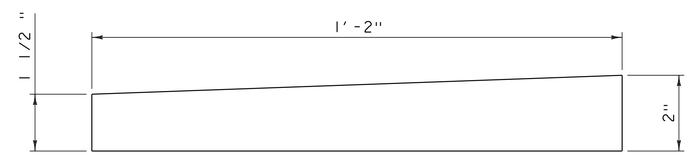

SOLE PLATE DETAIL
1½ TO 2" x 1'-2" x 1'-10"
SCALE 3" = 1'-0"

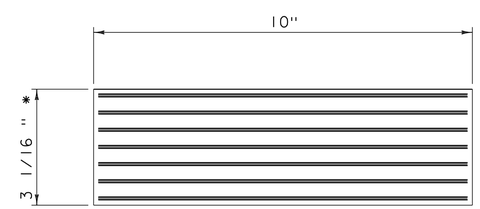

ELASTOMERIC BEARING DETAIL
3 1/16" x 10" x 1'-0"

SCALE 3" = 1'-0"

* 2 - 0.125" EXTERIOR LAYERS OF ELASTOMER
6 - 0.375 INTERIOR LAYERS OF ELASTOMER
7 - 0.078" (14 GAUGE) STEEL REINFORCING PLATES

PROJECT NAME: JAMAICA	
PROJECT NUMBER: ER-BRF 015-1(23)	
FILE NAME: 11b316brg.dgn	PLOT DATE: 07-DEC-2012
PROJECT LEADER: K. HIGGINS	DRAWN BY: J. SALVATORI
DESIGNED BY: G. LAROCHE	CHECKED BY: W. LAMMER
BEARING DETAILS	SHEET 37 OF 82

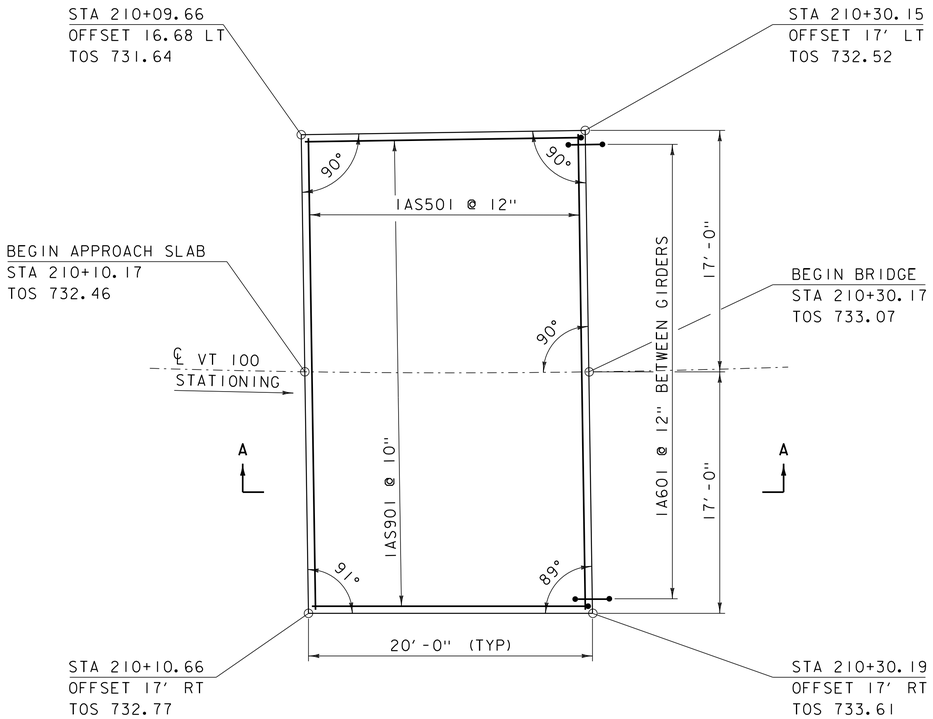

APPROACH SLAB 1 PLAN

SCALE 3/16" = 1'-0"

TOS = TOP OF SLAB

BALL MOUNTAIN BROOK
FLOW

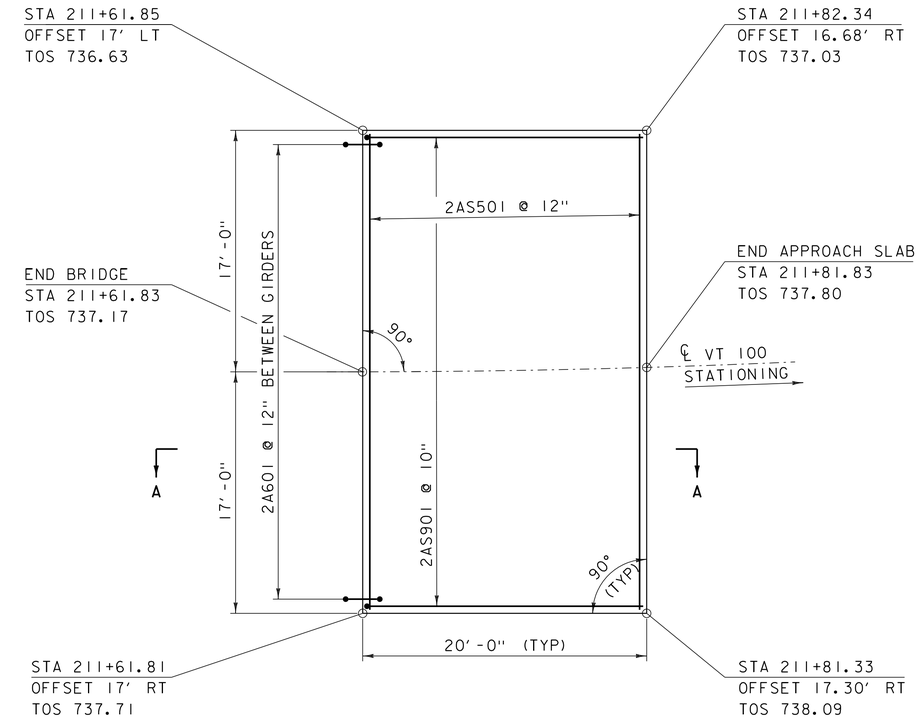

APPROACH SLAB 2 PLAN

SCALE 3/16" = 1'-0"

NOTE:

NF = NEAR FACE
FF = FAR FACE
EF = EACH FACE
▲ = CUT TO FIT IN FIELD
3" CLEAR, UNLESS OTHERWISE SPECIFIED ON THE PLANS.
3'-0" BAR LAP UNLESS OTHERWISE SPECIFIED ON THE PLANS.

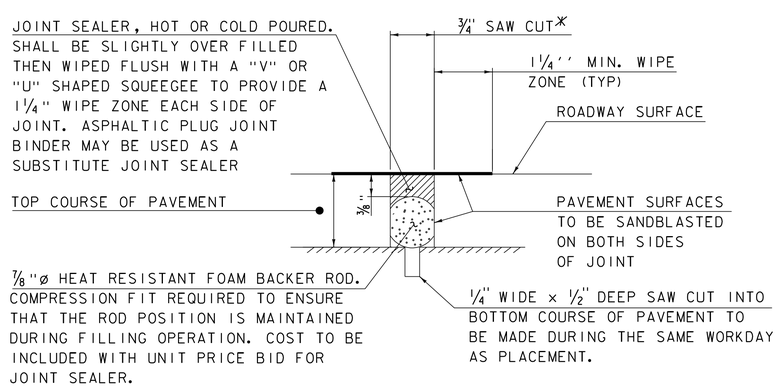

SAWED PAVEMENT JOINT DETAIL

(NOT TO SCALE)

*JOINT IS TO BE LOCATED ACCURATELY BY STRING LINING, OR OTHER MEANS, PRIOR TO PAVING, SO THAT THE SAW CUTS WILL BE MADE DIRECTLY OVER THE END OF CONCRETE DECK. JOINT SHALL BE CUT DRY IN A SINGLE PASS AND BE SEALED WITHIN 24 HOURS OR PRIOR TO EXPOSURE TO TRAFFIC. JOINT SHALL BE CLEANED PRIOR TO APPLYING THE JOINT SEALER.

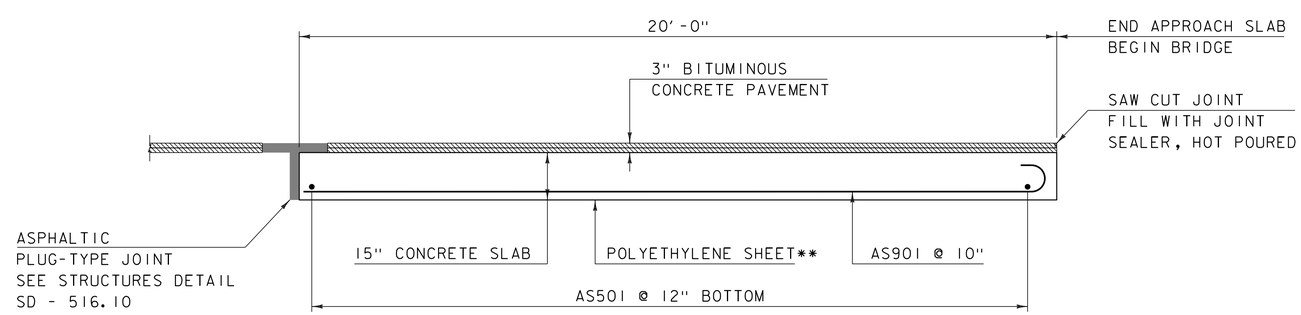

APPROACH SLAB DETAIL

SCALE ½" = 1'-0"

** THE POLYETHYLENE SHEET SHALL BE INCIDENTAL TO THE CONCRETE BID ITEM

PROJECT NAME: JAMAICA	
PROJECT NUMBER: ER-BRF 015-1(23)	
FILE NAME: sllb316sup.dgn	PLOT DATE: 07-DEC-2012
PROJECT LEADER: K. HIGGINS	DRAWN BY: K. FRIEDLAND
DESIGNED BY: C. LAROCHE	CHECKED BY: W. LAMMER
APPROACH SLAB DETAILS	SHEET 38 OF 82

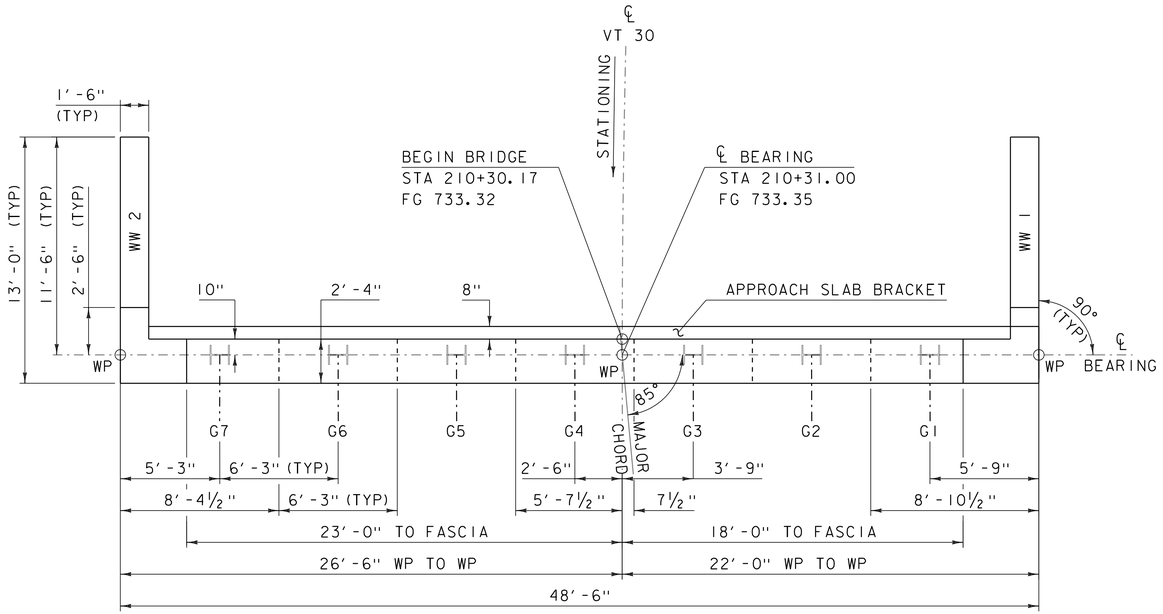

FLOW

ABUTMENT 1 PLAN

SCALE ¼" = 1'-0"

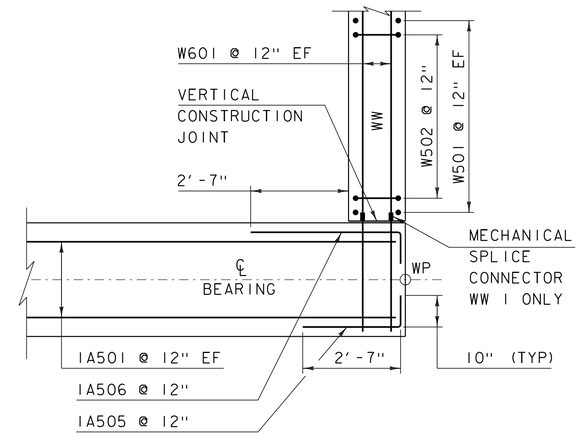

CORNER DETAIL ABOVE BRIDGE SEAT

SCALE ½" = 1'-0"

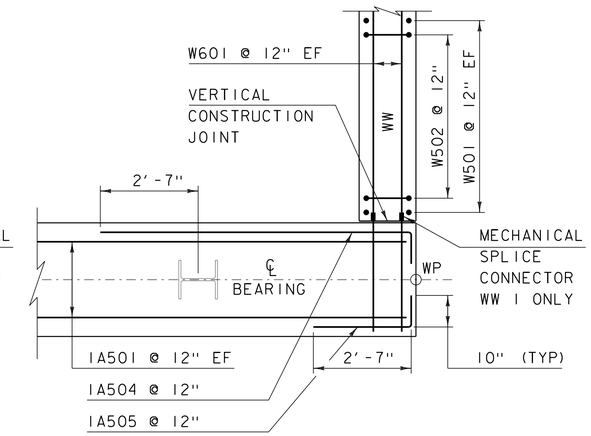

CORNER DETAIL BELOW BRIDGE SEAT

SCALE ½" = 1'-0"

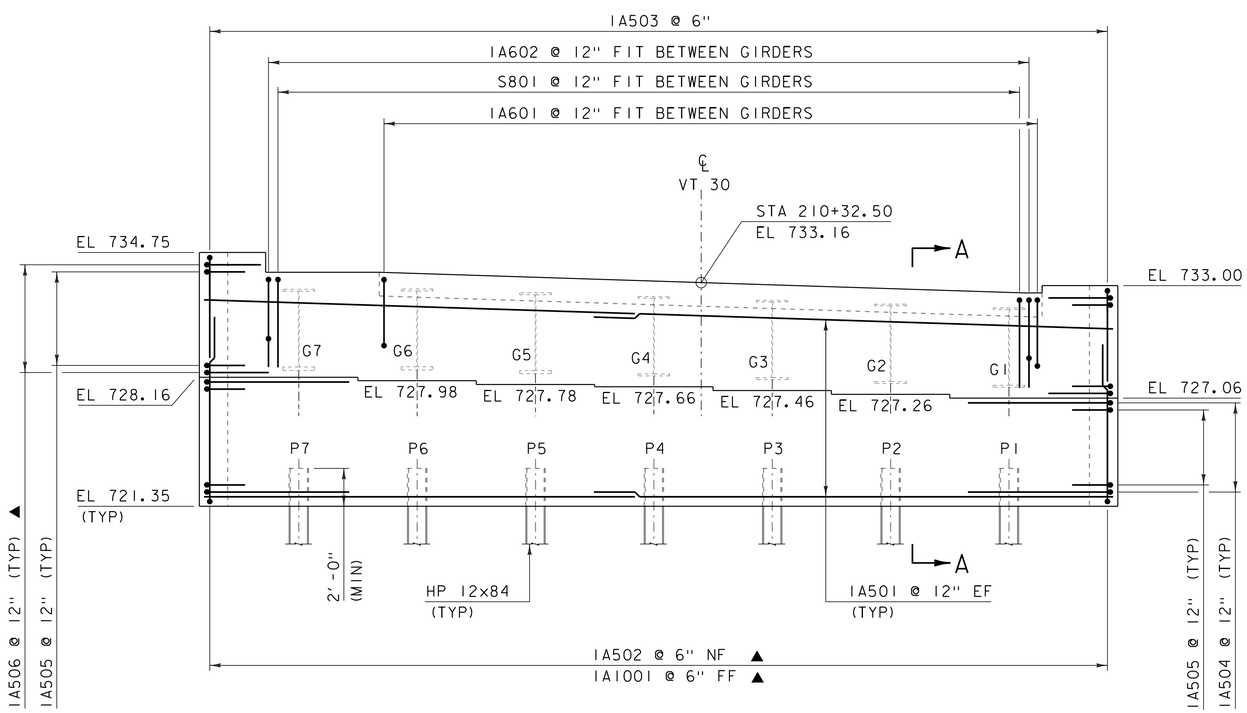

ABUTMENT 1 ELEVATION

SCALE ¼" = 1'-0"

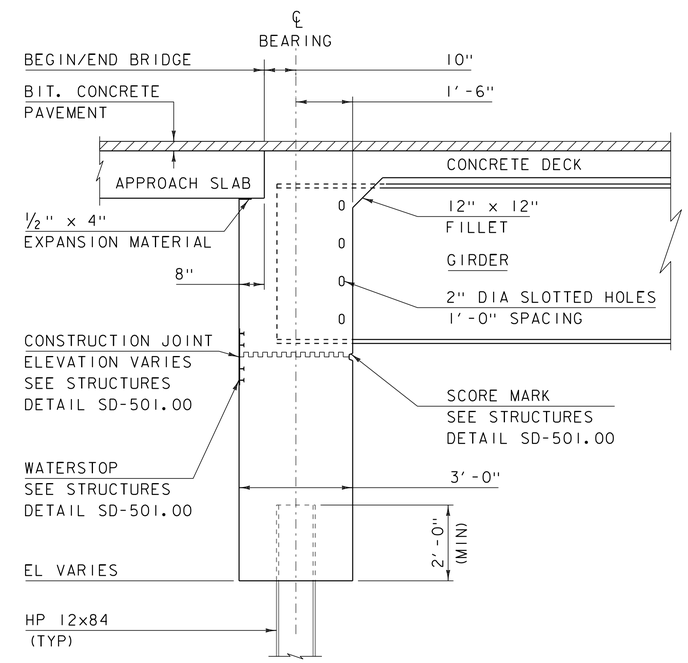

SECTION A-A
ABUTMENT TYPICAL SECTION

SCALE ½" = 1'-0"

NOTE:

NF = NEAR FACE
FF = FAR FACE
EF = EACH FACE
▲ = CUT TO FIT IN FIELD
3" CLEAR, UNLESS OTHERWISE SPECIFIED ON THE PLANS.
2'-7" BAR LAP UNLESS OTHERWISE SPECIFIED ON THE PLANS.

PROJECT NAME: JAMAICA	
PROJECT NUMBER: ER-BRF 015-1(23)	
FILE NAME: sllb316sub.dgn	PLOT DATE: 14-DEC-2012
PROJECT LEADER: K. HIGGINS	DRAWN BY: K. FRIEDLAND
DESIGNED BY: G. LAROCHE	CHECKED BY: W. LAMMER
ABUTMENT 1	SHEET 39 OF 82

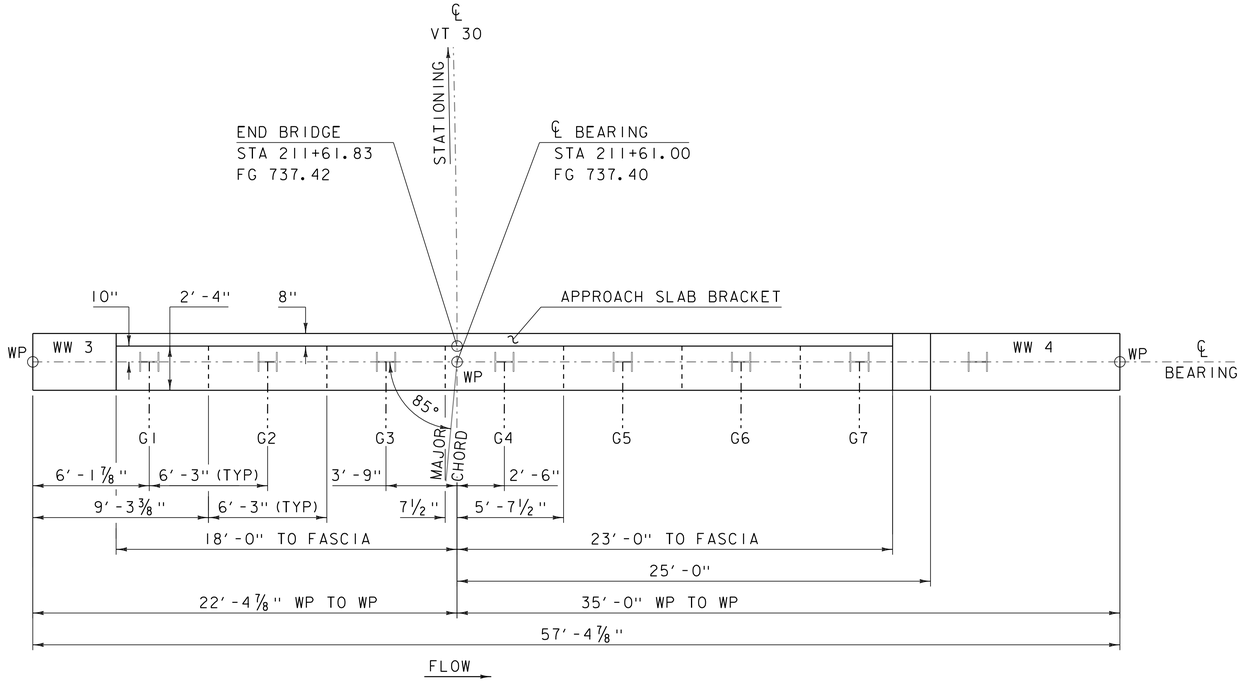

ABUTMENT 2 PLAN

SCALE 1/4" = 1'-0"

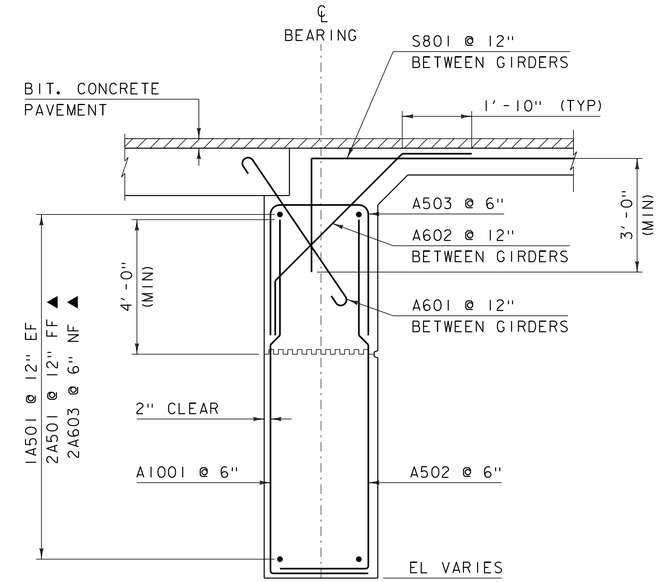

SECTION A-A
ABUTMENT REINFORCING TYPICAL

SCALE 1/2" = 1'-0"

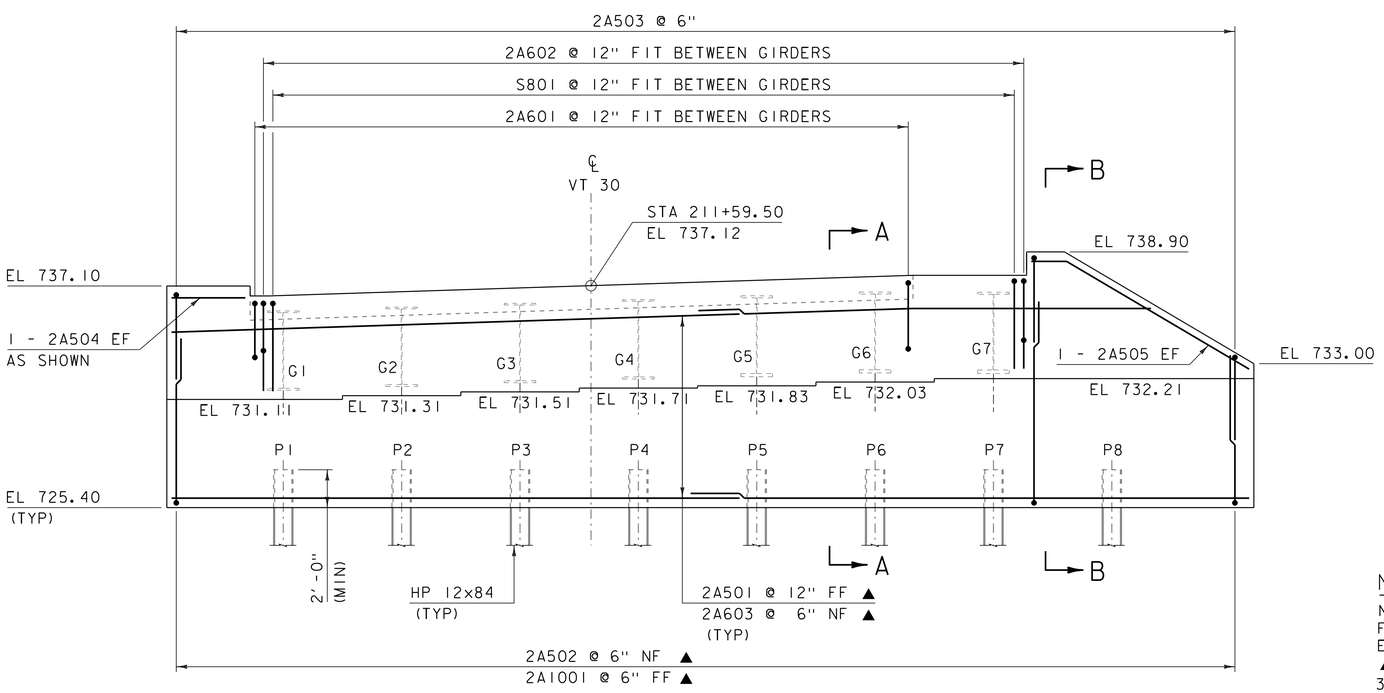

ABUTMENT 2 ELEVATION

SCALE 1/4" = 1'-0"

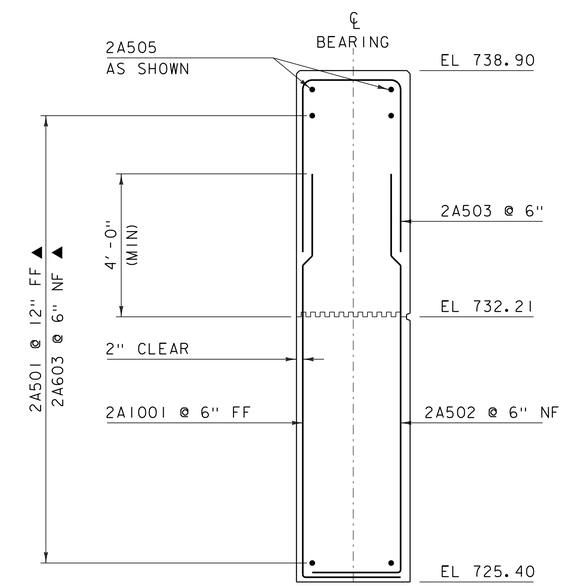

SECTION B-B
WINGWALL 4 REINFORCING TYPICAL

SCALE 1/2" = 1'-0"

NOTE:

NF = NEAR FACE
FF = FAR FACE
EF = EACH FACE
▲ = CUT TO FIT IN FIELD
3" CLEAR, UNLESS OTHERWISE SPECIFIED ON THE PLANS.
2'-7" BAR LAP UNLESS OTHERWISE SPECIFIED ON THE PLANS.

PROJECT NAME: JAMAICA	
PROJECT NUMBER: ER-BRF 015-1(23)	
FILE NAME: s11b316sub.dgn	PLOT DATE: 14-DEC-2012
PROJECT LEADER: K. HIGGINS	DRAWN BY: K. FRIEDLAND
DESIGNED BY: G. LAROCHE	CHECKED BY: W. LAMMER
ABUTMENT 2	SHEET 40 OF 82

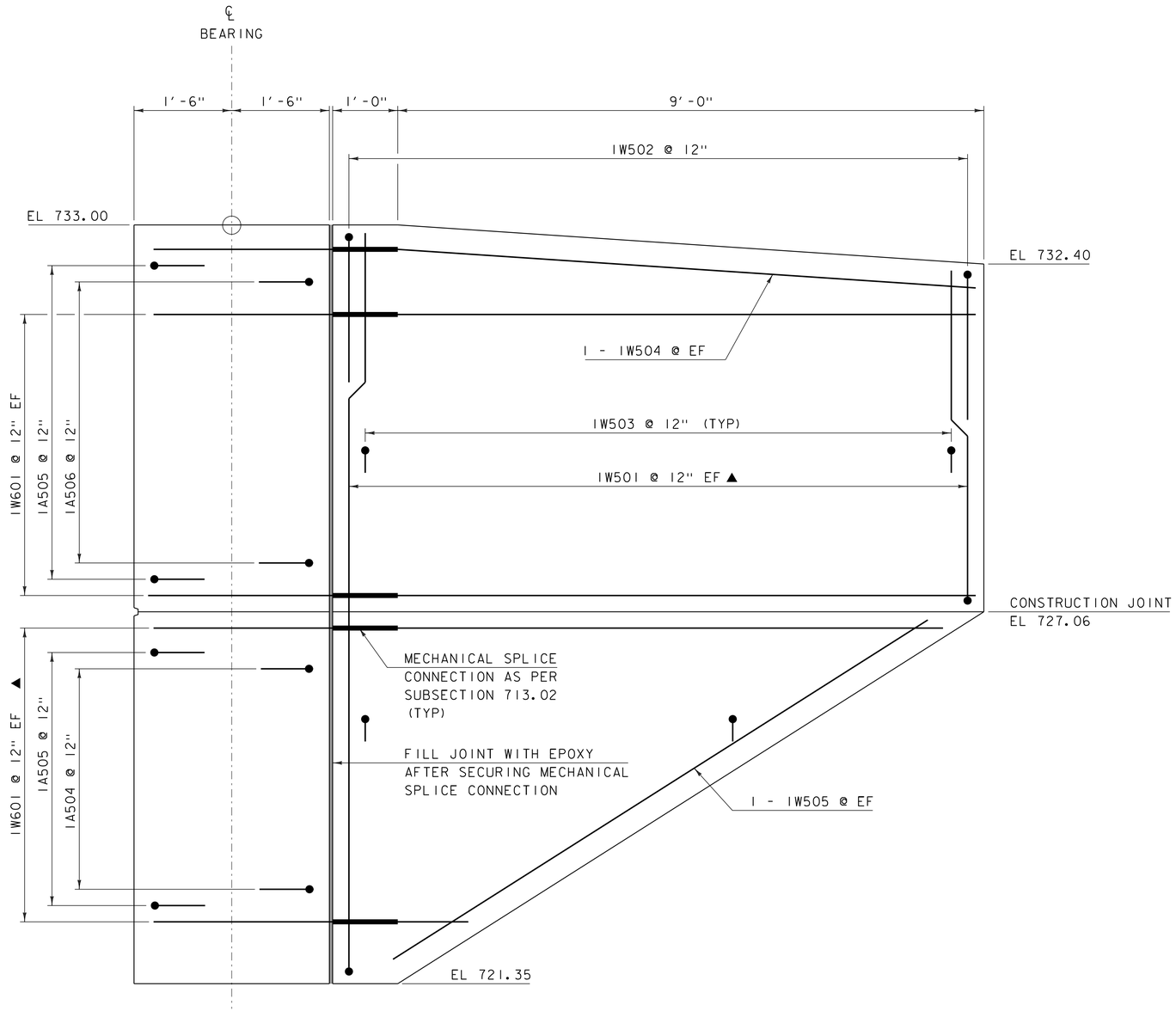

WINGWALL 1 ELEVATION

SCALE 1"=1'-0"

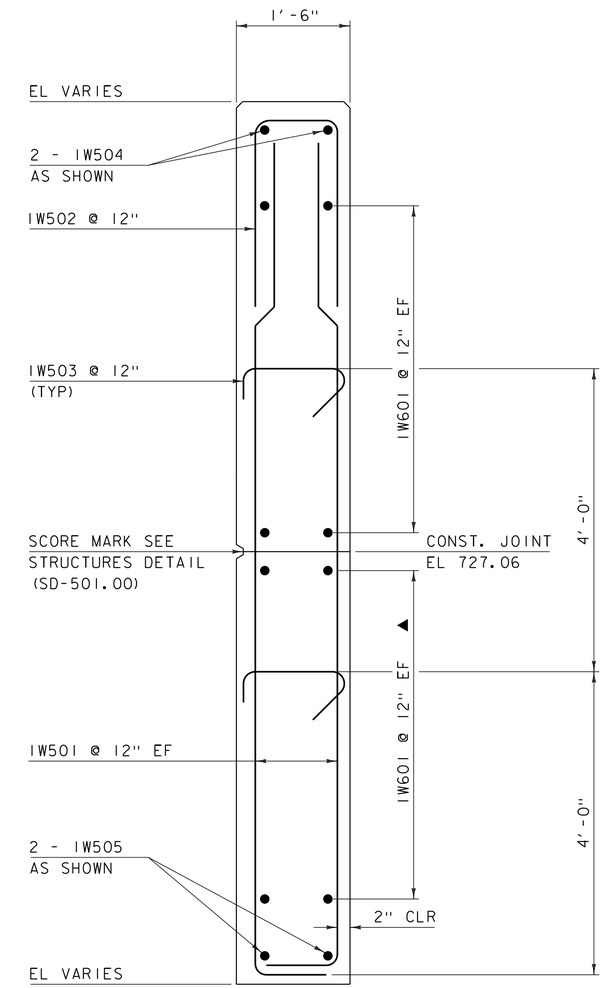

WINGWALL 1 TYPICAL SECTION

SCALE 1"=1'-0"

NOTES:

1. EPOXY SHALL BE INCIDENTAL TO CONCRETE BID ITEMS.

NOTE:

NF = NEAR FACE
FF = FAR FACE
EF = EACH FACE
▲ = CUT TO FIT IN FIELD
3" CLEAR, UNLESS OTHERWISE SPECIFIED ON THE PLANS.
2'-7" BAR LAP UNLESS OTHERWISE SPECIFIED ON THE PLANS.

PROJECT NAME: JAMAICA	
PROJECT NUMBER: ER-BRF 015-1(23)	
FILE NAME: s11b212sub.dgn	PLOT DATE: 07-DEC-2012
PROJECT LEADER: K. HIGGINS	DRAWN BY: K. FRIEDLAND
DESIGNED BY: G. LAROCHE	CHECKED BY: W. LAMMER
WINGWALL #1	SHEET 41 OF 82

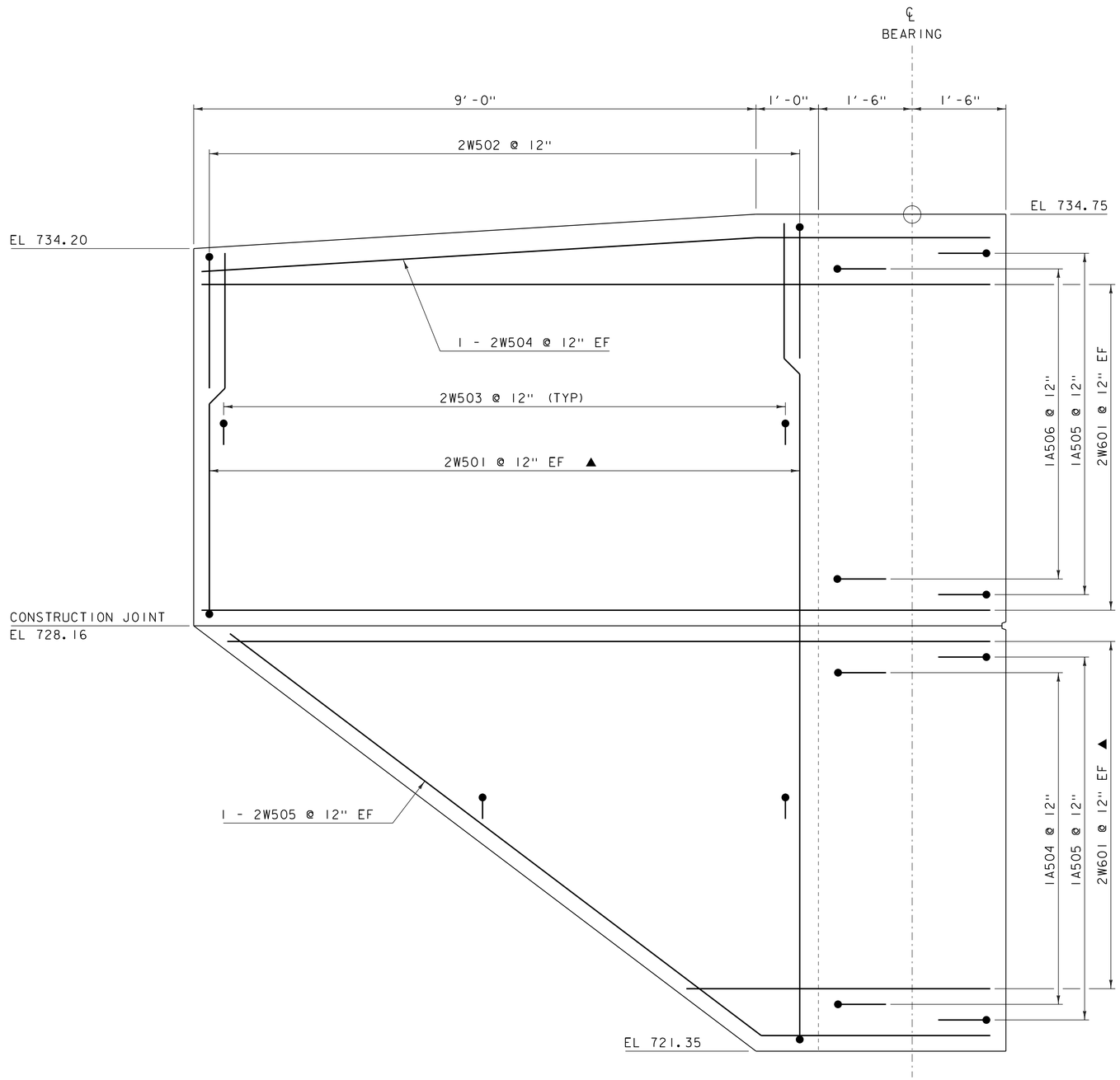

WINGWALL 2 ELEVATION

SCALE 1"=1'-0"

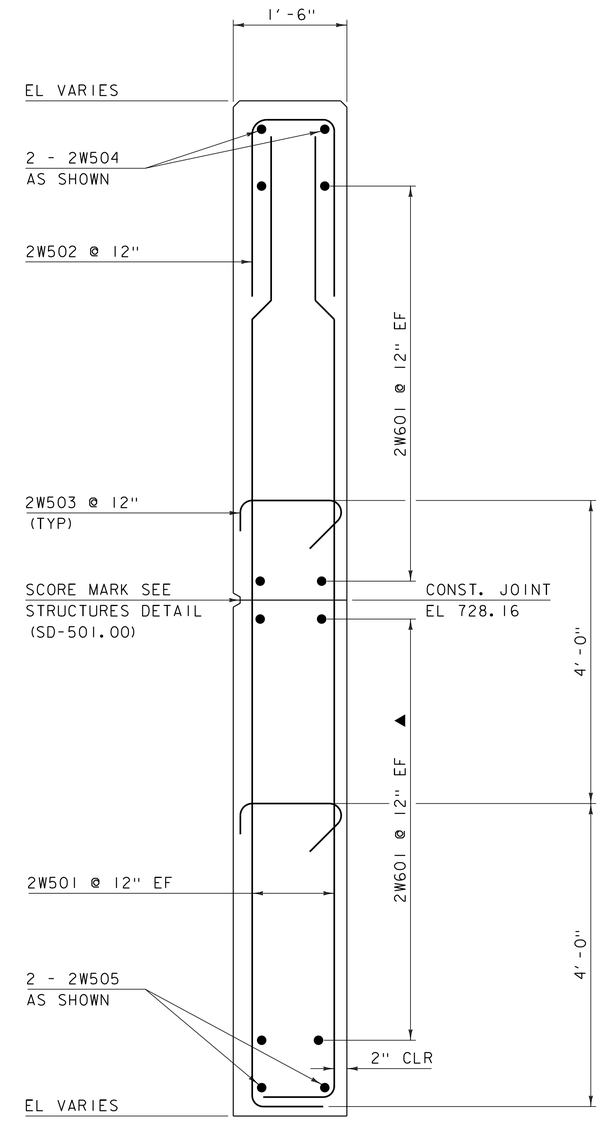

WINGWALL 2 TYPICAL SECTION

SCALE 1"=1'-0"

NOTE:

NF = NEAR FACE
FF = FAR FACE
EF = EACH FACE
▲ = CUT TO FIT IN FIELD
3" CLEAR, UNLESS OTHERWISE SPECIFIED ON THE PLANS.
2'-7" BAR LAP UNLESS OTHERWISE SPECIFIED ON THE PLANS.

PROJECT NAME: JAMAICA	
PROJECT NUMBER: ER-BRF 015-1(23)	
FILE NAME: sllb212sub.dgn	PLOT DATE: 07-DEC-2012
PROJECT LEADER: K. HIGGINS	DRAWN BY: K. FRIEDLAND
DESIGNED BY: G. LAROCHE	CHECKED BY: W. LAMMER
WINGWALL #2	SHEET 42 OF 82

NOTES:

1. DIMENSIONS SHOWN ARE BASED ON AN ASSUMED WALL THICKNESS OF 1'-0"
2. THE PRECAST BOX SECTIONS ARE SHOWN FOR REFERENCE ONLY. THE ACTUAL DIMENSIONS AND SHAPE WILL BE DEPENDENT ON THE FABRICATOR.

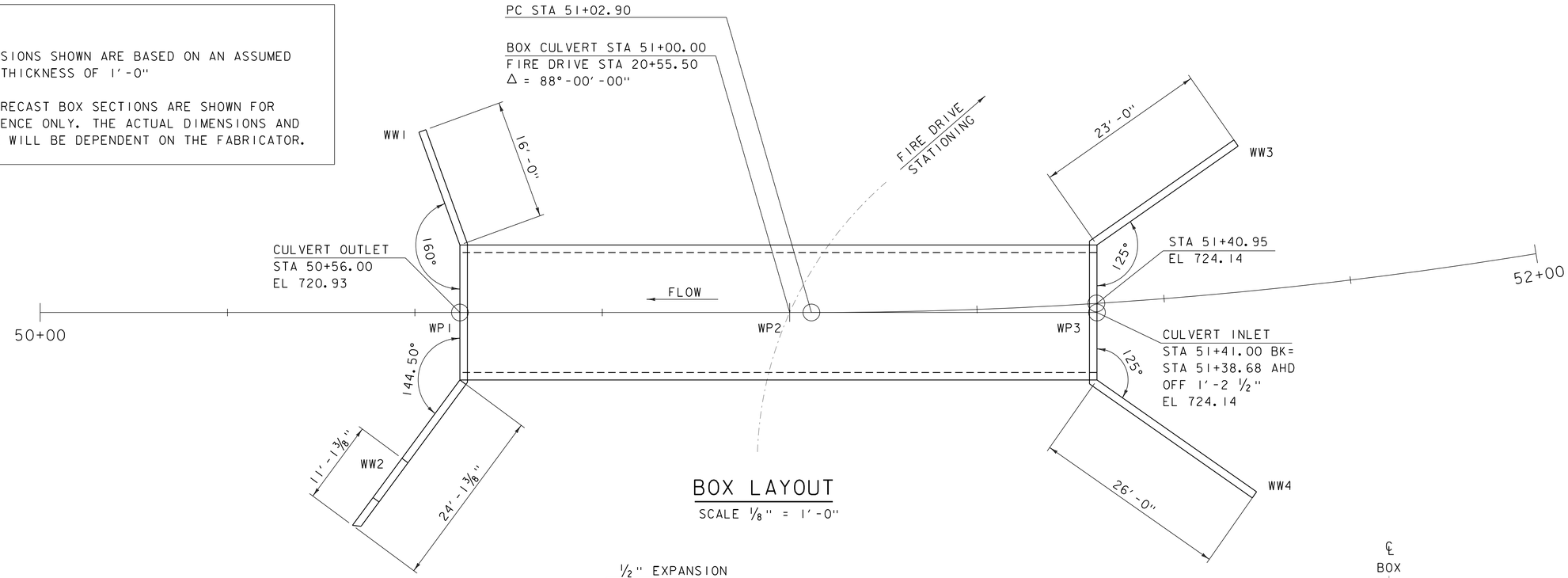

BOX LAYOUT

SCALE 1/8" = 1'-0"

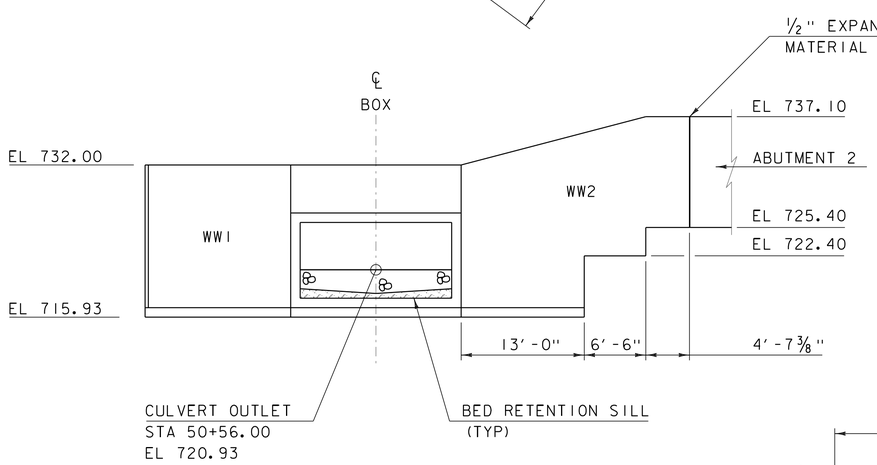

OUTLET ELEVATION

SCALE 1/8" = 1'-0"

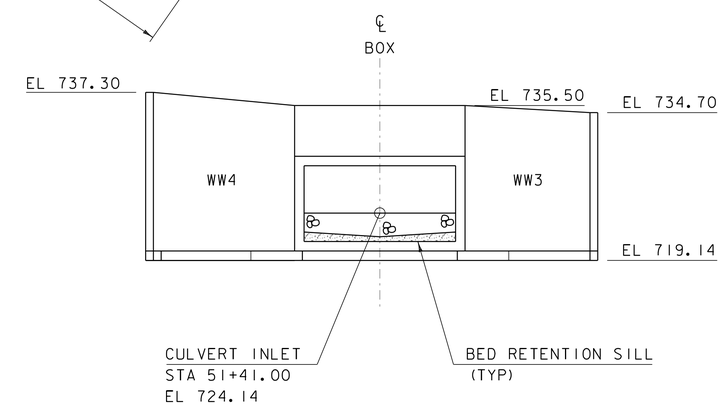

INLET ELEVATION

SCALE 1/8" = 1'-0"

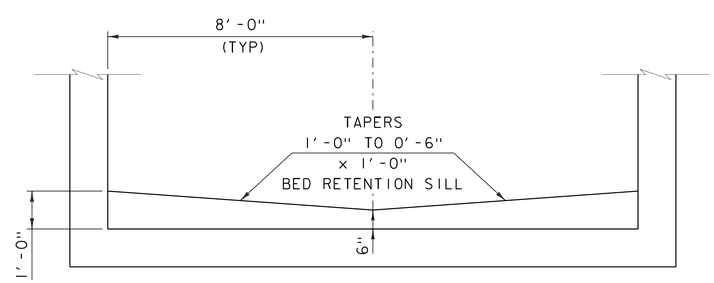

NOTES:

1. SILLS TO BE SPACED A MAXIMUM OF EVERY 8'-0"
2. FABRACATOR TO DETAIL BED RETENTION SILL CONNECTION.

BED RETENTION SILL DETAIL

NOT TO SCALE

PROJECT NAME: JAMAICA	
PROJECT NUMBER: ER-BRF 015-1(23)	
FILE NAME: sllb316box.dgn	PLOT DATE: 07-DEC-2012
PROJECT LEADER: K. HIGGINS	DRAWN BY: J. SALVATORI
DESIGNED BY: G. LAROCHE	CHECKED BY: J. SALVATORI
BOX LAYOUT	SHEET 43 OF 82

EPSC PLAN NARRATIVE

1.1 PROJECT DESCRIPTION

THIS PROJECT INVOLVES THE REPLACEMENT OF BRIDGE 30 WHICH IS LOCATED IN THE TOWN OF JAMAICA ON VERMONT ROUTE 30, APPROXIMATELY 4.8 MILES SOUTH OF THE NORTHERN JUNCTION OF VERMONT ROUTE 100 AND 30. THERE IS CURRENTLY A TEMPORARY BRIDGE IN PLACE, OFF ALIGNMENT, THAT WAS INSTALLED AFTER TROPICAL STORM IRENE. THE NEW STRUCTURE WILL BE APPROXIMATELY 132 FEET IN LENGTH WITH 243 FEET OF ROADWAY WORK. THIS PROJECT ALSO INVOLVES THE REPLACEMENT OF AN EXISTING BOX CULVERT. THE NEW PRECAST CONCRETE BOX CULVERT WILL BE APPROXIMATELY 85 FEET IN LENGTH.

TOTAL AREA OF DISTURBANCE AS SHOWN ON THE ATTACHED EPSC PLAN IS APPROXIMATELY 1.63 ACRES.

IT IS ANTICIPATED THAT THIS PROJECT WILL LAST ONE CONSTRUCTION SEASON.

1.2 SITE INVENTORY

1.2.1 TOPOGRAPHY
THE TOPOGRAPHY OF THE AREA IS RELATIVELY FLAT TO ROLLING AND LOCATED IN A SEMI URBAN AREA. THERE ARE RESIDENCES LOCATED ALONG BOTH SIDES OF ROUTE 30 FOR THE ENTIRE LENGTH OF THE PROJECT. THESE RESIDENCES HAVE WELL ESTABLISHED VEGETATION. VERMONT ROUTE 30, WATER STREET, CASTLE HILL ROAD AND THE DRIVE TO THE FIRE DEPARTMENT ARE WITHIN THE PROJECT AREA. FOR FINAL CONTOURS AND SLOPES SEE CROSS SECTION SHEETS.

1.2.2 DRAINAGE, WATERWAYS, BODIES OF WATER, AND PROXIMITY TO NATURAL OR MAN-MADE WATER FEATURES
BALL MOUNTAIN BROOK IS NOT THE ONLY WATER SOURCE IN THE PROJECT AREA. THE BROOK IS CLASSIFIED AS SINUOUS, ALLUVIAL AND CURRENTLY FLOOD DAMAGED. THE STREAM BED CONSISTS OF MOSTLY COBBLES WITH SOME GRAVEL AND BOULDERS. THERE IS ALSO AN UNNAMED BROOK FLOWING INTO BALL MOUNTAIN BROOK WITHIN THE PROJECT AREA.

1.2.3 VEGETATION
THE VEGETATION IN THE PROJECT AREA CONSISTS OF LAWNS WITH TREES. WELL ESTABLISHED TREES AND SHRUBS ARE LOCATED ALONG THE RIVER BANKS. THE IMPACT TO VEGETATION WILL BE LIMITED TO THAT WHICH IS DIRECTLY AFFECTED BY REPLACEMENT OF THE BRIDGE STRUCTURE AND BOX CULVERT. UPON PROJECT COMPLETION, THE CHANNEL WILL BE ARMORED WITH STONE FILL TYPE IV AS SPECIFIED ON THE PLANS. DISTURBED VEGETATION WILL BE REESTABLISHED WITH STANDARD SEED AND MULCH PRACTICES.

1.2.4 SOILS
ALL SOIL DATA CAME FROM THE U.S. DEPARTMENT OF AGRICULTURE SOIL CONSERVATION SERVICE FOR THE COUNTY OF WINDHAM, VERMONT. SOILS ON THE PROJECT SITE ARE:

50B COLTON LOAMY FINE SAND	2% TO 8% SLOPES	“K FACTOR” = 0.17
16B ADAMS LOAMY FINE SAND	2% TO 8% SLOPES	“K FACTOR” = 0.17
61E HOUGHTONVILLE FINE SANDY LOAM	25% TO 50% SLOPES	“K FACTOR” = 0.49
48D RAWSONVILLE-HOGBACK FINE SANDY LOAM	15% TO 25% SLOPES	“K FACTOR” = 0.49
56B MONADNOCK FINE SANDY LOAM	3% TO 8% SLOPES	“K FACTOR” = 0.28

NOTE: K-VALUES GENERALLY INDICATE THE FOLLOWING:
0.0-0.23 = LOW EROSION POTENTIAL
0.24-0.36 = MODERATE EROSION POTENTIAL
0.37 AND HIGHER = HIGH EROSION POTENTIAL

1.2.5 SENSITIVE RESOURCE AREAS
CRITICAL HABITATS: NO
HISTORICAL OR ARCHEOLOGICAL AREAS: NO
PRIME AGRICULTURAL LAND: NO
THREATENED AND ENDANGERED SPECIES: NO
WATER RESOURCE: BALL MOUNTAIN BROOK
WETLANDS: NO

1.3 RISK EVALUATION
THIS PROJECT FALLS UNDER THE JURISDICTION OF GENERAL PERMIT 3-9020 FOR STORMWATER RUNOFF FROM CONSTRUCTION SITES FOR LOW RISK PROJECTS. ANY MODIFICATIONS TO THE PROJECT THAT INCREASE THE RISK TO ENVIRONMENTAL RESOURCES SHALL BE EVALUATED IN ACCORDANCE WITH THE PERMIT REQUIREMENTS. THE CONTRACTOR WILL BE RESPONSIBLE FOR ANY ADDITIONAL PERMITTING.

1.4 EROSION PREVENTION AND SEDIMENT CONTROL
THE EROSION CONTROL PLANS ARE MEANT AS A GUIDELINE FOR PREVENTING EROSION AND CONTROLLING SEDIMENT TRANSPORT. THE PRINCIPLES OUTLINED IN THIS NARRATIVE CONSIST OF APPLYING MEASURES THROUGHOUT CONSTRUCTION OF THE PROJECT IN ORDER TO MINIMIZE SEDIMENT TRANSPORT TO THE RECEIVING WATERS. THE MEASURES INCLUDE STABILIZATION AND STRUCTURAL PRACTICES, STORM WATER CONTROLS AND OTHER POLLUTION PREVENTION PRACTICES. THEY HAVE BEEN PROPOSED BY THE DESIGNER AS A BASIS FOR PROTECTING RESOURCES AND WILL NEED TO BE BUILT UPON BASED ON THE SPECIFIC MEANS AND METHODS OF THE CONTRACTOR. REFER TO THE LOW RISK SITE HANDBOOK AND APPROPRIATE DETAIL SHEETS FOR SPECIFIC GUIDANCE AND CONSTRUCTION DETAILING.

ALL MEASURES SHALL BE REGULARLY MAINTAINED AND SHALL BE CHECKED FOR SEDIMENT BUILD-UP. SEDIMENT SHALL BE DISPOSED OF AT AN APPROVED SITE WHERE IT WILL NOT BE SUBJECT TO EROSION.

1.4.1 MARK SITE BOUNDARIES
SITE BOUNDARIES AND AREAS CONSTRUCTION EQUIPMENT CAN ACCESS SHALL BE DELINEATED.

PROJECT DEMARCATION FENCING (PDF) SHALL BE USED TO PHYSICALLY MARK SITE BOUNDARIES. BECAUSE THIS PROJECT FALLS UNDER THE CGP 3-9020, BARRIER FENCE SHALL BE USED INSTEAD OF PROJECT DEMARCATION FENCE WITHIN 100 FEET OF A WATER RESOURCE (STREAM, BROOK, LAKE, POND, WETLAND, ETC).

1.4.2 LIMIT DISTURBANCE AREA
PREVENTING INITIAL SOIL EROSION BY MINIMIZING THE EXPOSED AREA IS MUCH MORE EFFECTIVE THAN TREATING ERODED SEDIMENT. EARTH DISTURBANCE CAN BE MINIMIZED THROUGH CONSTRUCTION PHASING BY ONLY OPENING UP EARTH AS NECESSARY. THIS CAN LIMIT THE AREA THAT WILL BE DISTURBED AND EXPOSED TO EROSION. EMPLOY TEMPORARY CONSTRUCTION STABILIZATION PRACTICES IN INCREMENTAL STAGES AS PHASES CHANGE. FOR PROJECTS WHICH FALL UNDER THE CONSTRUCTION GENERAL PERMIT, ONLY THE ACREAGE LISTED ON THE PERMIT AUTHORIZATION MAY BE EXPOSED AT ANY GIVEN TIME.

MAINTAINING VEGETATED BUFFERS ALONG STREAM BANKS, WETLANDS OR OTHER SENSITIVE AREAS IS A CRUCIAL EROSION AND SEDIMENT CONTROL MEASURE THAT SHOULD BE ESTABLISHED WHEREVER POSSIBLE.

1.4.3 SITE ENTRANCE/EXIT STABILIZATION
TRACKING OF SEDIMENT ONTO PUBLIC HIGHWAYS SHALL BE MNIMIZED TO REDUCE THE POTENTIAL FOR RUNOFF ENTERING RECEIVING WATERS. INSTALLATION SHALL COINCIDE WITH THE CONTRACTORS PROGRESS SCHEDULE.

STABILIZED CONSTRUCTION ENTRANCES SHALL BE INSTALLED AS PROPOSED ON THE EPSC PLAN AND ANYWHERE EQUIPMENT WILL BE GOING FROM AREAS OF EXPOSED SOILS TO PAVED SURFACES.

1.4.4 INSTALL SEDIMENT BARRIERS
SEDIMENT BARRIERS SHALL BE UTILIZED TO INTERCEPT RUNOFF AND ALLOW SUSPENDED SEDIMENT TO SETTLE OUT. THEY SHALL BE INSTALLED PRIOR TO ANY UP SLOPE WORK.

FILTER CURTAIN SHALL BE INSTALLED AS PROPOSED ON THE EPSC PLANS PRIOR TO ANY CHANNEL WORK.

FILTER FABRIC DROP INLET PROTECTION SHALL BE INSTALLED AS PROPOSED ON THE EPSC PLANS.

BECAUSE THIS PROJECT FALLS UNDER THE CGP 3-9020, WOVEN WIRE REINFORCED SILT FENCE SHALL BE USED INSTEAD OF SILT FENCE WITHIN 100 FEET UPSLOPE OF RECEIVING WATERS.

1.4.5 DIVERT UPLAND RUNOFF
DIVERSIONARY MEASURES SHALL BE USED TO INTERCEPT RUNOFF FROM ABOVE THE CONSTRUCTION AND DIRECT IT AROUND THE DISTURBED AREA SO THAT CLEAN WATER DOES NOT BECOME MUDDIED WHILE TRAVELING OVER EXPOSED SOILS ON THE CONSTRUCITON SITE.

IT IS NOT ANTICIPATED THAT DIVERSIONARY MEASURES WILL BE NEEDED ON THIS PROJECT.

1.4.6 SLOW DOWN CHANNELIZED RUNOFF
CHECK STRUCTURES SHALL BE UTILIZED TO REDUCE THE VELOCITY, AND THUS THE EROSIVE POTENTIAL, OF CONCENTRATED FLOW IN CHANNELS.

IT IS NOT ANTICIPATED THAT CHECK STRUCTURES WILL BE NEEDED ON THIS PROJECT.

1.4.7 CONSTRUCT PERMANENT CONTROLS
PERMANENT STORM WATER TREATMENT DEVICES SHALL BE INSTALLED AS SHOWN ON THE PLANS AND IN ACCORDANCE WITH PERMIT CONDITIONS. STONE FILL SHALL BE INSTALLED AS SHOWN ON THE EPSC PLANS. GEOTEXTILE SHALL BE INSTALLED BELOW THE STONE FILL TYPE IV AS SHOWN ON THE CHANNEL CROSS SECTIONS.

1.4.8 STABILIZE EXPOSED SOILS DURING CONSTRUCTION
ALL AREAS OF DISTURBANCE MUST HAVE TEMPORARY STABILIZATION IN PLACE WITHIN 48 HOURS OF DISTURBANCE OR IN ACCORDANCE WITH THE CONSTRUCTION GENERAL PERMIT 3-9020 AUTHORIZATION.

SURFACE ROUGHENING OF ALL EXPOSED SLOPES, COMBINED WITH TEMPORARY MULCHING, SHALL BE UTILIZED ON A REGULAR BASIS. BIODEGRADABLE EROSION CONTROL MATTING OR AN EQUIVALENT SHALL BE USED TO STABILIZE ALL SLOPES STEEPER THAN 1:3.

THE FORECAST OF RAINFALL EVENTS SHALL TRIGGER IMMEDIATE PROTECTION OF EXPOSED SOILS.

1.4.9 WINTER STABILIZATION
VARIOUS MEASURES SPECIFIC TO WINTER MAY BE NECESSARY SHOULD THE PROJECT EXTEND INTO WINTER (OCTOBER 15 THROUGH APRIL 15). REFER TO THE LOW RISK SITE HANDBOOK FOR GUIDANCE.

1.4.10 STABILIZE SOIL AT FINAL GRADE
THE URBAN SEED MIX SHALL BE USED ON ALL AREAS TO BE RE-VEGETATED AS SHOWN ON THE FINAL CONDITIONS PLANS.

EXPOSED SOIL MUST BE STABILIZED WITHIN 48 HOURS OF REACHING FINAL GRADE.

SEED, MULCH, FERTILIZER AND LIME SHALL BE USED TO ESTABLISH PERMANENT VEGETATION. FOR SLOPES STEEPER THAN 1:3, BIODEGRADABLE EROSION CONTROL MATTING OR AN EQUIVALENT SHALL BE USED INSTEAD OF MULCH.

1.4.11 DE-WATERING ACTIVITIES
DISCHARGE FROM DEWATERING ACTIVITIES THAT FLOWS OFF OF THE CONSTRUCTION SITE MUST NOT CAUSE OR CONTRIBUTE TO A VIOLATION OF THE VERMONT WATER QUALITY STANDARDS.

TREATMENT OF DEWATERING COFFERDAM IS NOT ANTICIPATED.

1.4.12 INSPECT YOUR SITE
INSPECT THE PROJECT SITE BASED ON SPECIAL PROVISION REQUIREMENTS OR CONSTRUCTION GENERAL PERMIT AUTHORIZATION STIPULATIONS.

1.5 SEQUENCE AND STAGING

THIS SECTION WILL BE DEVELOPED BY THE CONTRACTOR USING THE GUIDANCE OUTLINED IN THE VTRANS EPSC PLAN CONTRACTOR CHECKLIST.

1.5.1 CONSTRUCTION SEQUENCE

1.5.2 OFF-SITE ACTIVITIES
IN ADDITION TO THE CONTRACTOR CHECKLIST ANY ACTIVITIES OUTSIDE THE CONSTRUCTION LIMITS SHALL FOLLOW SUBSECTION 105.25- 105.29 OF THE STANDARD SPECIFICATIONS FOR CONSTRUCTION.

50B COLTON LOAMY FINE SAND
WITH 2% TO 8% SLOPES
"K FACTOR" = 0.17

16B ADAMS LOAMY FINE SAND
WITH 2% TO 8% SLOPES
"K FACTOR" 0.17

61E HOUGHTONVILLE
FINE SANDY LOAM
WITH 25% TO 50% SLOPES
"K FACTOR" = 0.49

48D RAWSONVILLE-HOGBACK
FINE SANDY LOAM
WITH 15% TO 25% SLOPES
"K FACTOR" = 0.49

BENCHMARK
CHISELED SQUARE
IN TOP OF ABUT.
ELEV. 732.93

BENCHMARK
RR SPIKE IN POLE
ELEV. 728.63

BENCHMARK
RR SPIKE IN POLE
ELEV. 732.78

BENCHMARK
CHISELED SQUARE
ON ABUT.
ELEV. 731.75

BENCHMARK
STATE OF VERMONT
SURVEY DISK
ELEV. 733.77

VT STATE PLANE GRID

N

MATCHLINE 213+75

VT RTE 30
TO TOWNSHEND

VT RTE 30
TO STRATTON

RIPARIAN BUFFER

BALL MOUNTAIN BROOK
FLOW

ELAINE BECKWITH
GALLERY
FINE ART

208+00
209+00
210+00
211+00
212+00
213+00
8+00
9+00
10+00
11+00
12+00
20+00
21+00
22+00
31+00
32+00
50+00
51+00
52+00

LEGEND

—·—·—·—	RIPARIAN BUFFER
——— P/L ———	PROPERTY LINE
——— ———	RIGHT-OF-WAY LINE
—··—··—	SOIL BOUNDARY

EPSC EXISTING CONDITIONS SHEET 1

SCALE 1" = 20'-0"
20 0 20

PROJECT NAME: JAMAICA	
PROJECT NUMBER: ER-BRF 015-1(23)	
FILE NAME: sllb316.epsc_ex.dgn	PLOT DATE: 07-DEC-2012
PROJECT LEADER: K. HIGGINS	DRAWN BY: K. FRIEDLAND
DESIGNED BY: K. FRIEDLAND	CHECKED BY: G. LAROCHE
EPSC EXISTING CONDITIONS SHEET 1	SHEET 45 OF 82

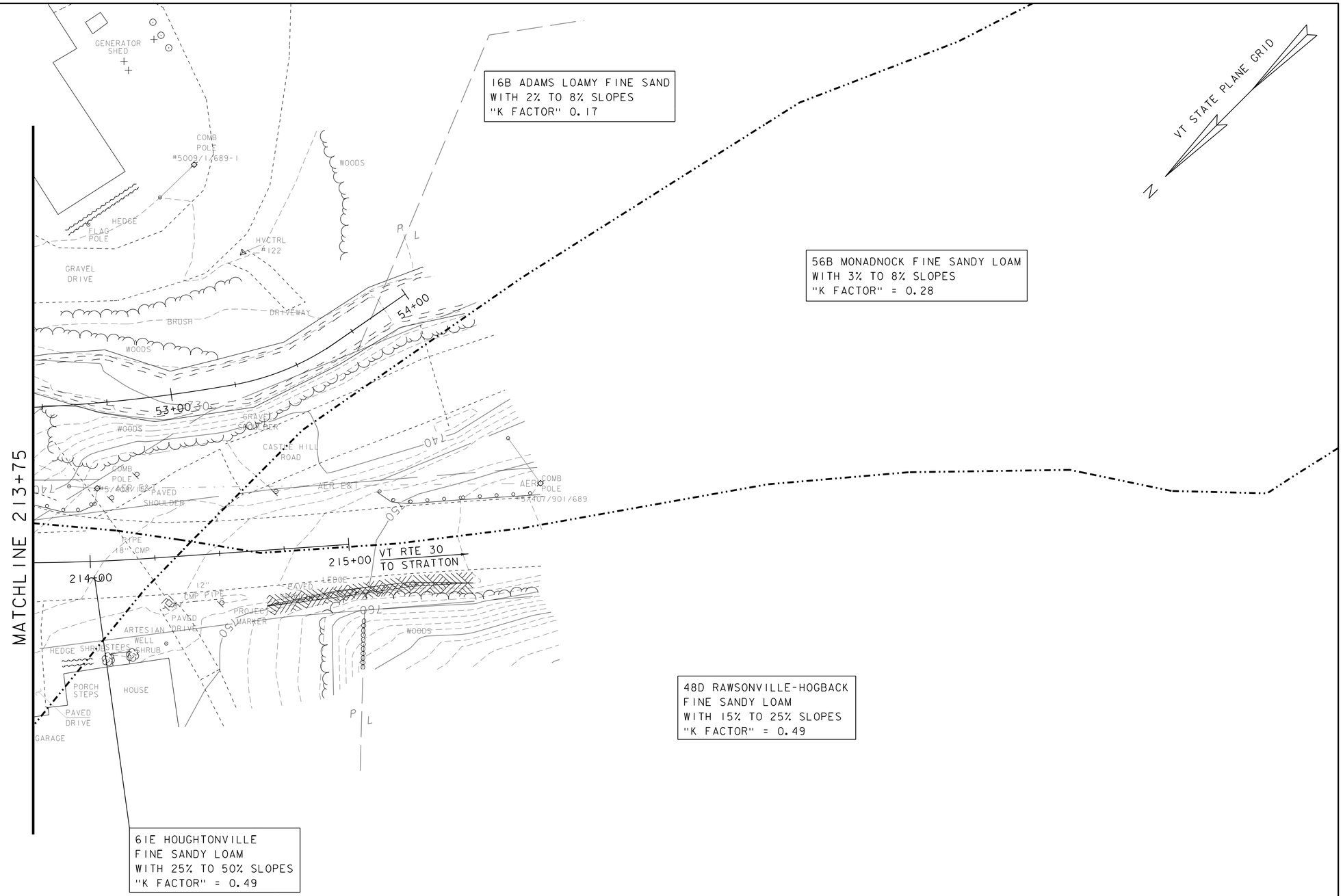

LEGEND

-·-·-·-·-·-	RIPARIAN BUFFER
——— P/L ———	PROPERTY LINE
——— ———	RIGHT-OF-WAY LINE
-··-··-··-··-	SOIL BOUNDARY

EPSC EXISTING CONDITIONS SHEET 2

SCALE 1" = 20'-0"
20 0 20

PROJECT NAME: JAMAICA	
PROJECT NUMBER: ER-BRF 015-1(23)	
FILE NAME: s11b316.epsc_ex.dgn	PLOT DATE: 07-DEC-2012
PROJECT LEADER: K. HIGGINS	DRAWN BY: K. FRIEDLAND
DESIGNED BY: K. FRIEDLAND	CHECKED BY: G. LAROCHE
EPSC EXISTING CONDITIONS SHEET 2	SHEET 46 OF 82

50B COLTON LOAMY FINE SAND
WITH 2% TO 8% SLOPES
"K FACTOR" = 0.17

16B ADAMS LOAMY FINE SAND
WITH 2% TO 8% SLOPES
"K FACTOR" 0.17

BEGIN APPROACH
STA 208+75.00

BEGIN PROJECT
STA 209+75.00

BEGIN BRIDGE
STA 210+30.17
F.G. = 733.32

STONE FILL
TYPE IV

CULVERT OUTLET
STA 50+56.00

END FIRE DRIVE
STA 21+08.77

CULVERT INLET
STA 51+41.00

STONE FILL
TYPE III

VT STATE PLANE GRID

N

MATCHLINE 213+75

VT RTE 30
TO TOWNSHEND

VT RTE 30
TO STRATTON

SWALE FLOW

END PROJECT
STA 213+50.00

END BRIDGE
STA 211+61.83
F.G. = 737.42

STONE FILL,
TYPE II

6IE HOUGHTONVILLE
FINE SANDY LOAM
WITH 25% TO 50% SLOPES
"K FACTOR" = 0.49

48D RAWSONVILLE-HOGBACK
FINE SANDY LOAM
WITH 15% TO 25% SLOPES
"K FACTOR" = 0.49

STONE FILL,
TYPE IV
(TYP)

END WATER ST
STA 31+25.00

LEGEND

	CUT/FILL LIMITS
PDF	PROJECT DEMARCATION FENCE
	SILT FENCE
	SILT FENCE, WIRE WOVEN REINFORCED
BF	BARRIER FENCE
	FILTER FABRIC DROP INLET PROTECTION
	SURFACE ROUGHENING
	ROLLED EROSION CONTROL PRODUCT (RECP)
	STONE FILL
	STABILIZED CONSTRUCTION ENTRANCE
	FILTER CURTAIN

EPSC DURING CONSTRUCTION 1

SCALE 1" = 20'-0"
20 0 20

PROJECT NAME: JAMAICA	
PROJECT NUMBER: ER-BRF 015-1(23)	
FILE NAME: sllb316.epsc_dur.dgn	PLOT DATE: 07-DEC-2012
PROJECT LEADER: K. HIGGINS	DRAWN BY: K. FRIEDLAND
DESIGNED BY: K. FRIEDLAND	CHECKED BY: G. LAROCHE
EPSC DURING CONSTRUCTION 1	SHEET 47 OF 82

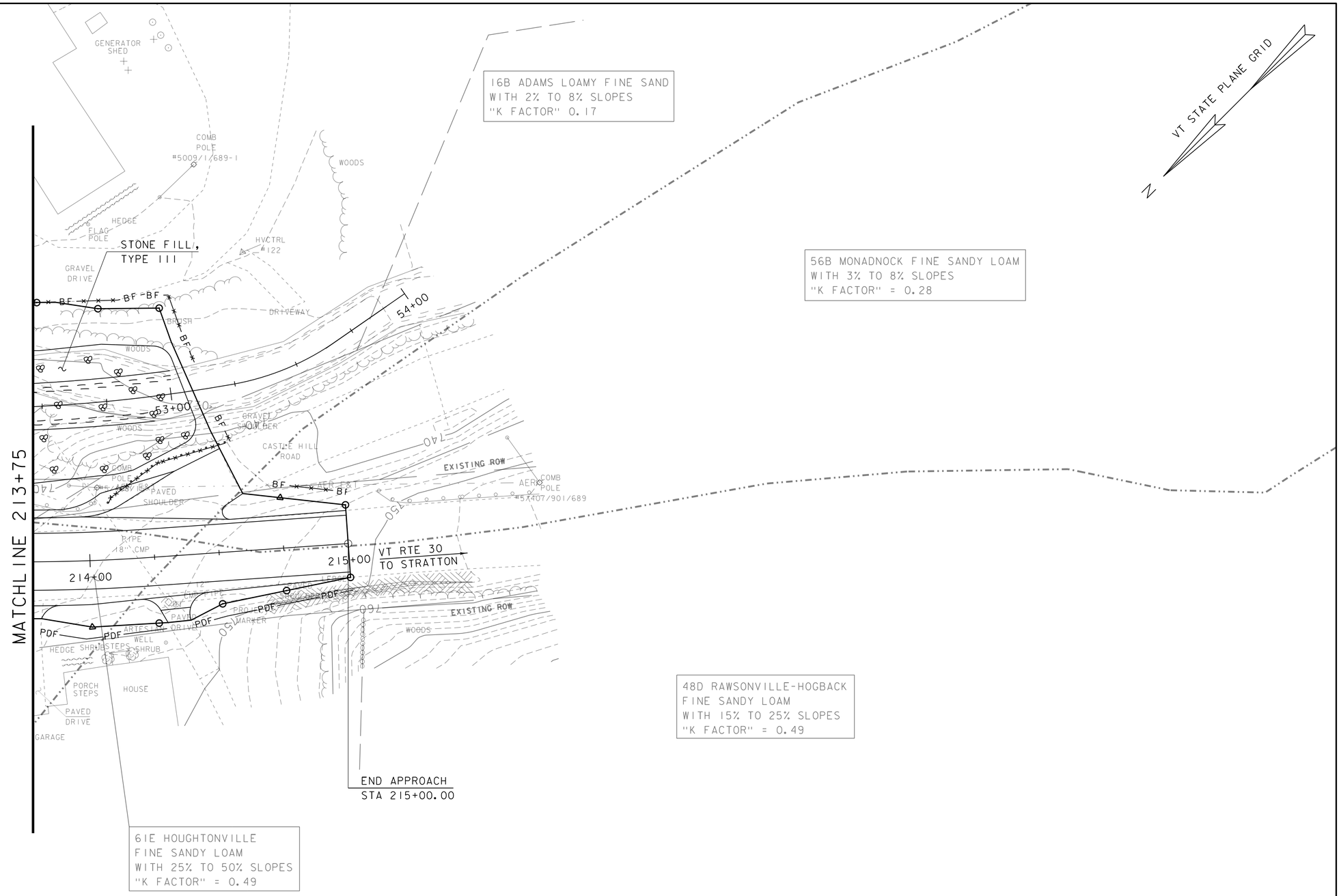

LEGEND

	CUT/FILL LIMITS
PDF	PROJECT DEMARCATION FENCE
	SILT FENCE
	SILT FENCE, WIRE WOVEN REINFORCED
BF BF	BARRIER FENCE
	FILTER FABRIC DROP INLET PROTECTION
	SURFACE ROUGHENING
	ROLLED EROSION CONTROL PRODUCT (RECP)
	STONE FILL
	STABILIZED CONSTRUCTION ENTRANCE
	TURBIDITY CURTAIN

EPSC DURING CONSTRUCTION 2

SCALE 1" = 20'-0"

20 0 20

PROJECT NAME:	JAMAICA
PROJECT NUMBER:	ER-BRF 015-1(23)

FILE NAME: s11b316.epsc_dur.dgn	PLOT DATE: 07-DEC-2012
PROJECT LEADER: K. HIGGINS	DRAWN BY: K. FRIEDLAND
DESIGNED BY: K. FRIEDLAND	CHECKED BY: G. LAROCHE
EPSC DURING CONSTRUCTION 2	SHEET 48 OF 82

BEGIN APPROACH
STA 208+75.00

BEGIN PROJECT
STA 209+75.00

BEGIN BRIDGE
STA 210+30.17
F.G. = 733.32

STONE FILL,
TYPE IV

CULVERT OUTLET
STA 50+56.00

END FIRE DRIVE
STA 21+08.77

CULVERT INLET
STA 51+41.00

STONE FILL,
TYPE III

END PROJECT
STA 213+50.00

END BRIDGE
STA 211+61.83
F.G. = 737.42

STONE FILL,
TYPE II

END WATER ST
STA 31+25.00

STONE FILL,
TYPE IV
(TYP)

VT STATE PLANE GRID

MATCHLINE 213+75

VT RTE 30
TO TOWNSHEND

VT RTE 30
TO STRATTON

AREAS OF EARTH DISTURBANCE
THAT WILL REQUIRE REVEGETATION.

EPSC FINAL CONDITIONS SHEET 1

SCALE 1" = 20'-0"
20 0 20

PROJECT NAME: JAMAICA	
PROJECT NUMBER: ER-BRF 015-1(23)	
FILE NAME: sllb316.epsc_final.dgn	PLOT DATE: 07-DEC-2012
PROJECT LEADER: K. HIGGINS	DRAWN BY: K. FRIEDLAND
DESIGNED BY: K. FRIEDLAND	CHECKED BY: G. LAROCHE
EPSC FINAL CONDITIONS SHEET 1	SHEET 49 OF 82

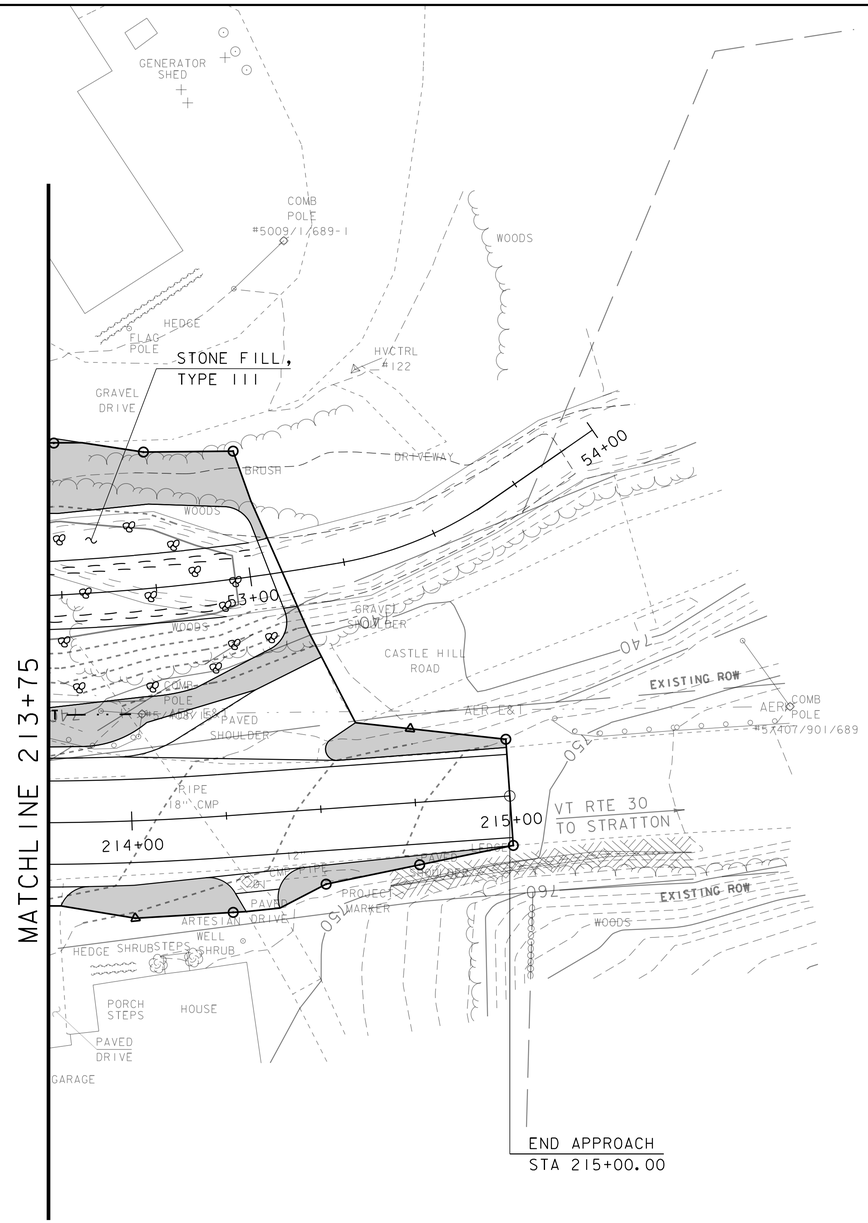

AREAS OF EARTH DISTURBANCE THAT WILL REQUIRE REVEGETATION.

EPSC FINAL CONDITIONS SHEET 2

SCALE 1" = 20'-0"

20 0 20

PROJECT NAME: JAMAICA	
PROJECT NUMBER: ER-BRF 015-1(23)	
FILE NAME: s11b316.epsc_final.dgn	PLOT DATE: 07-DEC-2012
PROJECT LEADER: K. HIGGINS	DRAWN BY: K. FRIEDLAND
DESIGNED BY: K. FRIEDLAND	CHECKED BY: G. LAROCHE
EPSC FINAL CONDITIONS SHEET 2	SHEET 50 OF 82

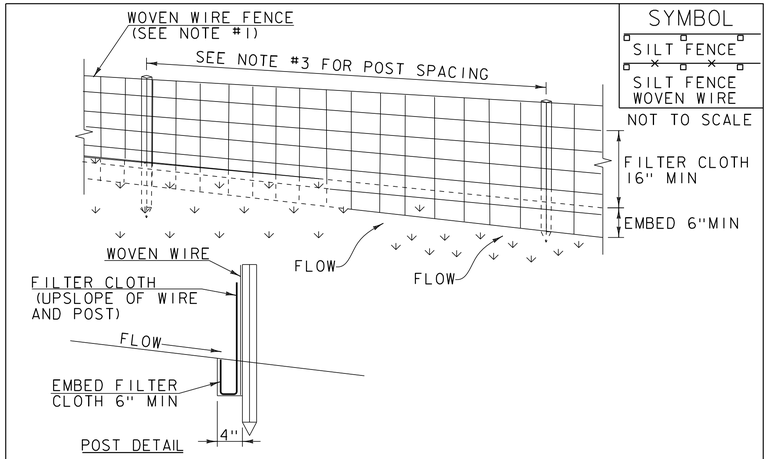

SYMBOL

SILT FENCE

SILT FENCE WOVEN WIRE

NOT TO SCALE

CONSTRUCTION SPECIFICATIONS

1. WOVEN WIRE REINFORCED FENCE IS REQUIRED WITHIN 100' UPSLOPE OF RECEIVING WATERS WHEN THE PROJECT FALLS UNDER A CONSTRUCTION STORMWATER PERMIT. WOVEN WIRE SHALL BE A MIN. 14 GAUGE WITH A 6" MAX. MESH OPENING.
2. FILTER CLOTH SHALL BE EITHER FILTER X, MIRAFI100X, STABILINKA T140N OR APPROVED EQUIVALENT.
3. POST SPACING FOR WIRE-BACKED FENCE SHALL BE 10' MAXIMUM. FOR FILTER-CLOTH FENCE, WHEN ELONGATION IS >50%, POST SPACING SHALL NOT EXCEED 4' AND WHEN ELONGATION IS <50%, POST SPACING SHALL NOT EXCEED 6'.
4. WOVEN WIRE FENCE IS TO BE FASTENED SECURELY TO FENCE POSTS WITH WIRE TIES. FILTER CLOTH IS TO BE FASTENED SECURELY TO WOVEN WIRE FENCE WITH TIES SPACED EVERY 24" AT TOP AND MID SECTION.
5. WHEN TWO SECTIONS OF FILTER CLOTH ADJOIN EACH OTHER THEY SHALL BE OVER-LAPPED BY 6" AND FOLDED.
6. MAINTENANCE SHALL BE PERFORMED AS NEEDED AND MATERIAL REMOVED WHEN SEDIMENT REACHES HALF OF FABRIC HEIGHT.

ADAPTED FROM DETAILS PROVIDED BY: NEW YORK STATE DEC
ORIGINALLY DEVELOPED BY USDA-NRCS
VERMONT DEPARTMENT OF ENVIRONMENTAL CONSERVATION

SILT FENCE

NOTES:
REFER TO "THE VERMONT STANDARDS & SPECIFICATIONS FOR EROSION PREVENTION & SEDIMENT CONTROL -2006- " FROM THE VT AGENCY OF NATURAL RESOURCES FOR ADDITIONAL GUIDANCE.

THIS WORK SHALL BE PERFORMED IN ACCORDANCE WITH SECTION 649 AND AS SHOWN IN THE PLANS FOR ~~GEOTEXTILE FOR SILT FENCE (PAY ITEM 649.51) OR~~ GEOTEXTILE FOR SILT FENCE, WOVEN WIRE REINFORCED (PAY ITEM 649.515).

REVISIONS	
MARCH 21, 2008	WHF
DECEMBER 11, 2008	WHF
JANUARY 13, 2009	WHF

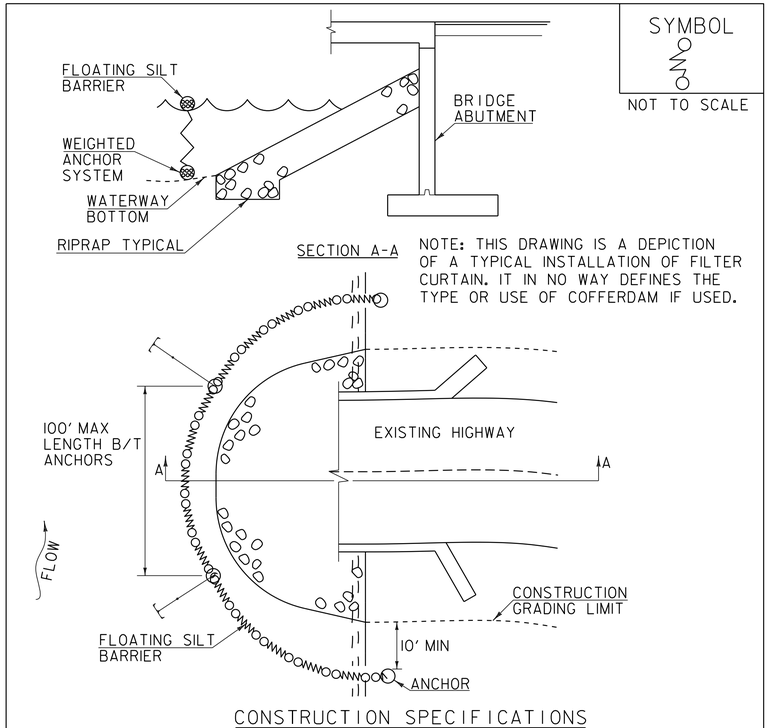

NOTE: THIS DRAWING IS A DEPICTION OF A TYPICAL INSTALLATION OF FILTER CURTAIN. IT IN NO WAY DEFINES THE TYPE OR USE OF COFFERDAM IF USED.

SYMBOL

NOT TO SCALE

CONSTRUCTION SPECIFICATIONS

1. FILTER CURTAIN SHALL NOT BE PLACED ACROSS A FLOWING WATERWAY, OR IN A WATERWAY WITH STREAM VELOCITIES GREATER THAN 1.5 FEET/SECOND.
2. MAXIMUM 100' LENGTH BETWEEN ANCHORS.
3. LAST SECTION SHALL TERMINATE A MINIMUM OF 10' BEYOND LIMIT OF DISTURBANCE.
4. THE WEIGHTED ANCHOR SYSTEM SHALL BE A TYPE WHICH ALLOWS THE CURTAIN TO CONFORM TO THE BOTTOM OF THE WATERWAY.
5. THE CURTAIN SHALL BE REMOVED BY SLOWLY PULLING TOWARD THE SHORE MINIMIZING THE ESCAPE OF SEDIMENTS INTO WATERWAY.

FILTER CURTAIN

THIS WORK SHALL BE PERFORMED IN ACCORDANCE WITH SECTION 649 FOR GEOTEXTILE FOR FILTER CURTAIN (PAY ITEM 649.61).

REVISIONS	
APRIL 1, 2008	WHF
JANUARY 13, 2009	WHF
SEPTEMBER 4, 2009	WHF

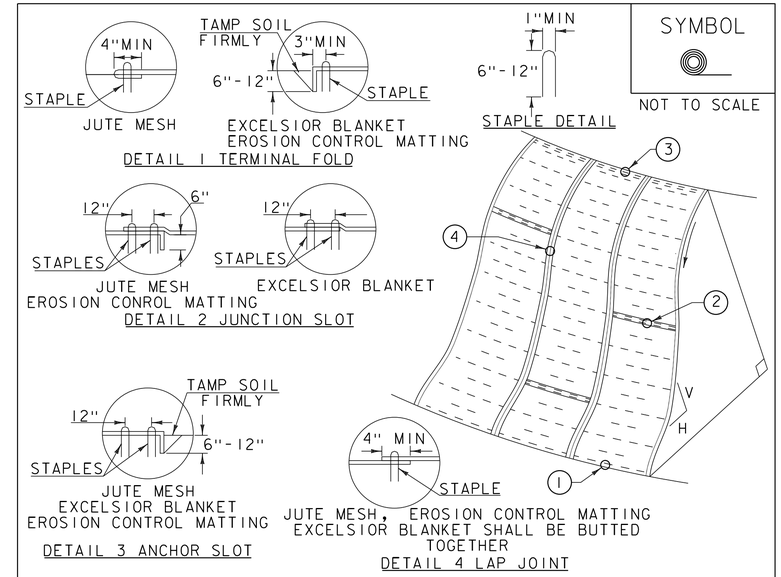

SYMBOL

NOT TO SCALE

CONSTRUCTION SPECIFICATIONS

1. APPLY TO SLOPES GREATER THAN 3H:1V OR WHERE NECESSARY TO AID IN ESTABLISHING VEGETATION.
2. APPLY FERTILIZER, LIME SEED PRIOR TO PLACING MATTING.
3. STAPLES ARE TO BE PLACED ALTERNATELY, IN COLUMNS APPROXIMATELY 2' APART AND IN ROWS APPROXIMATELY 3' APART. APPROXIMATELY 175 STAPLES ARE REQUIRED PER 4'X225' ROLL OF MATERIAL AND 125 STAPLES ARE REQUIRED PER 4'X150' ROLL OF MATERIAL.
4. DISTURBED AREAS SHALL BE SMOOTHLY GRADED. EROSION CONTROL MATERIAL SHALL BE PLACED LOOSELY OVER GROUND SURFACE. DO NOT STRETCH.
5. ALL TERMINAL ENDS AND TRANSVERSE LAPS SHALL BE STAPLED AT APPROXIMATELY 12" INTERVALS.

ADAPTED FROM DETAILS PROVIDED BY: NEW YORK STATE DEC
ORIGINALLY DEVELOPED BY USDA-NRCS
VERMONT DEPARTMENT OF ENVIRONMENTAL CONSERVATION

ROLLED EROSION CONTROL PRODUCT (RECP) SIDE SLOPE

NOTES:
REFER TO "THE VERMONT STANDARDS & SPECIFICATIONS FOR EROSION PREVENTION & SEDIMENT CONTROL -2006- " FROM THE VT AGENCY OF NATURAL RESOURCES FOR ADDITIONAL GUIDANCE.
THIS WORK SHALL BE PERFORMED IN ACCORDANCE WITH SECTION 653 AND AS SHOWN IN THE PLANS FOR TEMPORARY EROSION MATTING (PAY ITEM 653.20) ~~OR PERMANENT EROSION MATTING (PAY ITEM 653.21).~~

REVISIONS	
APRIL 16, 2007	JMF
JANUARY 13, 2009	WHF

PROJECT NAME: JAMAICA
PROJECT NUMBER: ER-BRF 015-1(23)

FILE NAME: s11b316epsc_details.dgn
PROJECT LEADER: K. HIGGINS
DESIGNED BY: K. FRIEDLAND
EPSC DETAILS SHEET 1

PLOT DATE: 07-DEC-2012
DRAWN BY: K. FRIEDLAND
CHECKED BY: G. LAROCHE
SHEET 51 OF 82

SYMBOL

NOT TO SCALE

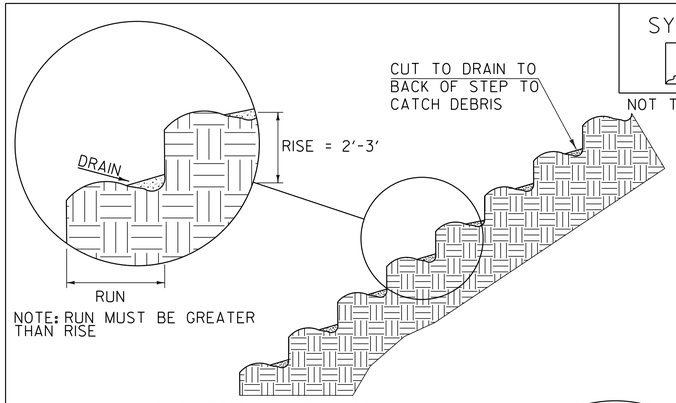

NOTE: RUN MUST BE GREATER THAN RISE

STAIR STEPPING CUT SLOPES

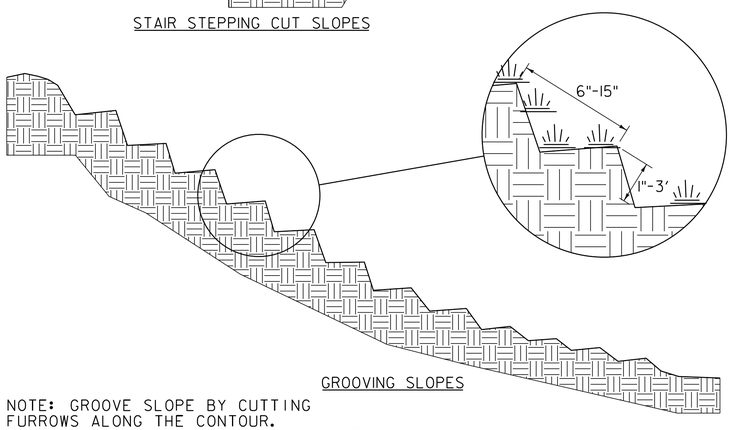

GROOVING SLOPES

NOTE: GROOVE SLOPE BY CUTTING FURROWS ALONG THE CONTOUR. IRREGULARITIES IN THE SOIL SURFACE CATCH RAINWATER AND RETAIN LIME, FERTILIZER AND SEED.

ADAPTED FROM DETAILS PROVIDED BY: NEW YORK STATE DEC
ORIGINALLY DEVELOPED BY USDA-NRCS
VERMONT DEPARTMENT OF ENVIRONMENTAL CONSERVATION

SURFACE ROUGHENING

NOTES:
REFER TO "THE VERMONT STANDARDS & SPECIFICATIONS FOR EROSION PREVENTION & SEDIMENT CONTROL -2006- " FROM THE VT AGENCY OF NATURAL RESOURCES FOR ADDITIONAL GUIDANCE.

THIS WORK SHALL BE CONSIDERED INCIDENTAL TO THE CONTRACT

REVISIONS	
APRIL 1, 2008	WHF
JANUARY 13, 2009	WHF

SYMBOL

NOT TO SCALE

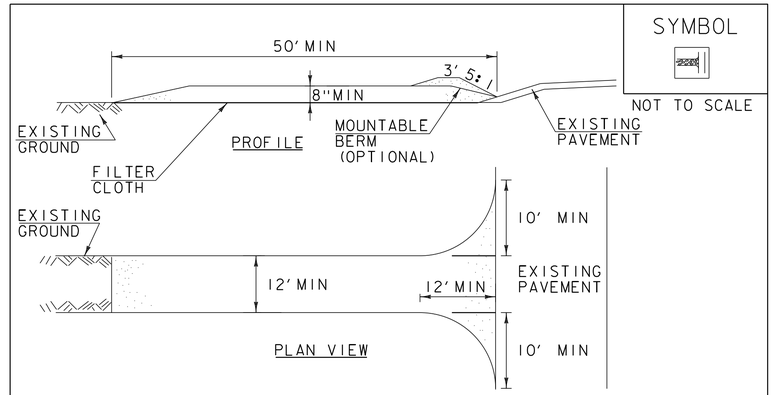

CONSTRUCTION SPECIFICATIONS

1. STONE SIZE- USE 1-4" STONE, RECLAIMED OR RECYCLED CONCRETE EQUIVALENT.
2. LENGTH- NOT LESS THAN 50' (EXCEPT ON A SINGLE RESIDENCE LOT WHERE A 30' MINIMUM LENGTH APPLIES).
3. THICKNESS- NOT LESS THAN 8".
4. WIDTH- 12' MINIMUM, BUT NOT LESS THAN THE FULL WIDTH AT POINTS WHERE INGRESS OR EGRESS OCCURS. 24' IF SINGLE ENTRANCE TO SITE.
5. GEOTEXTILE MUST BE PLACED OVER THE ENTIRE AREA PRIOR TO PLACING STONE.
6. SURFACE WATER- ALL SURFACE WATER FLOWING OR DIVERTED TOWARD CONSTRUCTION ENTRANCES SHALL BE PIPED BENEATH THE ENTRANCE. IF PIPING IS IMPRACTICAL, A MOUNTABLE BERM WITH 5:1 SLOPES WILL BE PERMITTED.
7. MAINTENANCE- THE ENTRANCE SHALL BE MAINTAINED IN A CONDITION WHICH WILL PREVENT TRACKING OR FLOWING OF SEDIMENT ONTO PUBLIC RIGHTS-OF-WAY, ALL SEDIMENT SPILLED, DROPPED, WASHED OR TRACKED ONTO PUBLIC RIGHTS-OF-WAY MUST BE REMOVED IMMEDIATELY.
8. WHEN WASHING IS REQUIRED, IT SHALL BE DONE ON AN AREA STABILIZED WITH STONE AND WHICH DRAINS INTO AN APPROVED SEDIMENT TRAPPING DEVICE.
9. PERIODIC INSPECTION AND NEEDED MAINTENANCE SHALL BE PROVIDED ACCORDING TO PERMIT REQUIREMENTS.

ADAPTED FROM DETAILS PROVIDED BY: NEW YORK STATE DEC
ORIGINALLY DEVELOPED BY USDA-NRCS
VERMONT DEPARTMENT OF ENVIRONMENTAL CONSERVATION

STABILIZED CONSTRUCTION ENTRANCE

NOTES:
REFER TO "THE VERMONT STANDARDS & SPECIFICATIONS FOR EROSION PREVENTION & SEDIMENT CONTROL -2006- " FROM THE VT AGENCY OF NATURAL RESOURCES FOR ADDITIONAL GUIDANCE.

THIS WORK SHALL BE PERFORMED IN ACCORDANCE WITH SECTION 653 FOR VEHICLE TRACKING PAD (PAY ITEM 653.35) OR AS SPECIFIED IN THE CONTRACT.

REVISIONS	
MARCH 24, 2008	WHF
JANUARY 13, 2009	WHF

VAOT RURAL AREA MIX					
	LBS/AC				
% WEIGHT	BROADCAST	HYDROSEED	NAME	GERM %	PURITY %
37.5%	22.5	45	CREEPING RED FESCUE	85%	98%
37.5%	22.5	45	TALL FESCUE	90%	95%
5.0%	3	6	RED TOP	90%	95%
15.0%	9	18	BIRDSFOOT TREFOIL	85%	98%
5.0%	3	6	ANNUAL RYE GRASS	85%	95%
100%	60	120			

VAOT URBAN AREA MIX					
	LBS/AC				
% WEIGHT	BROADCAST	HYDROSEED	NAME	GERM %	PURITY %
42.5%	34	68	CREEPING RED FESCUE	85%	98%
10.0%	8	16	PERENNIAL RYE GRASS	90%	95%
42.5%	34	68	KENTUCKY BLUE GRASS	85%	85%
5.0%	4	8	ANNUAL RYE GRASS	85%	95%
100%	80	160			

SOIL AMENDMENT GUIDANCE			
FERTILIZER		LIME	
BROADCAST	HYDROSEED	BROADCAST	HYDROSEED
10-20-10	*FOLLOW*	PELLETIZED	*FOLLOW*
500 LBS/AC	*MANUFACTURER*	2 TONS/AC	*MANUFACTURER*

CONSTRUCTION GUIDANCE

1. RURAL SEED MIX: USE AS INDICATED IN THE PLANS AND/OR FOR ALL ESTABLISHED UPLAND (NON WETLAND) AREAS DISTURBED BY THE CONTRACTOR.
2. URBAN SEED MIX: USE AS INDICATED IN THE PLANS AND/OR FOR ALL ESTABLISHED LAWN AREAS DISTURBED BY THE CONTRACTOR.
3. ALL SEED MIXTURES: SHALL NOT HAVE A WEED CONTENT EXCEEDING 0.40% BY WEIGHT AND SHALL BE FREE OF ALL NOXIOUS SEED.
4. FERTILIZER AND LIMESTONE: SHALL FOLLOW RATES SHOWN ON PLAN OR AS DIRECTED BY THE ENGINEER
5. HAY MULCH: TO BE PLACED ON EARTH SLOPES AT THE RATE OF 2 TONS/ACRE, ACHIEVE 90% GROUND COVER OR AS DIRECTED BY THE ENGINEER.
6. TOPSOIL: TO BE USED WITH SEED AS INDICATED ON THE PLANS, OR AS DIRECTED BY THE ENGINEER.
7. HYDROSEEDING: ALTHOUGH GUIDANCE IS GIVEN ABOVE THE SITE CONDITIONS AND THE TYPE OF HYDROSEED WILL ULTIMATELY DICTATE THE AMOUNTS AND TYPES OF SOIL AMENDMENTS TO BE APPLIED
8. TURF ESTABLISHMENT: PLACING SEED, FERTILIZER, LIME AND MULCH PRIOR TO SEPTEMBER 15 AND AFTER APRIL 15 CAN BETTER ENSURE A VIGOROUS GROWTH OF GRASS.

ADAPTED FROM VTRANS TECHNICAL LANDSCAPE MANUAL FOR ROADWAYS AND TRANSPORTATION FACILITIES

TURF ESTABLISHMENT

REVISIONS	
JUNE 23, 2009	WHF
JANUARY 15, 2010	WHF
FEBRUARY 16, 2011	WHF

PROJECT NAME: JAMAICA
PROJECT NUMBER: ER-BRF 015-1(23)

FILE NAME: s11b316epsc_details.dgn
PROJECT LEADER: K. HIGGINS
DESIGNED BY: K. FRIEDLAND
EPSC DETAILS SHEET 2

PLOT DATE: 07-DEC-2012
DRAWN BY: K. FRIEDLAND
CHECKED BY: G. LAROCHE
SHEET 52 OF 82

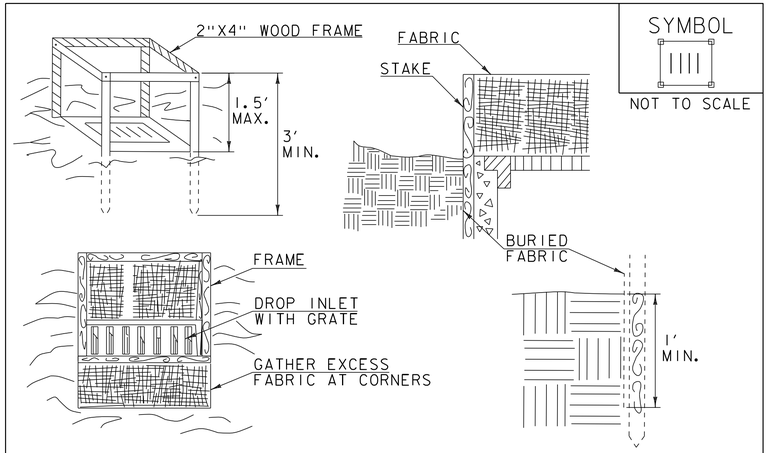

SYMBOL

NOT TO SCALE

CONSTRUCTION SPECIFICATIONS

1. FILTER FABRIC SHALL HAVE AN APPARENT OPENING SIZE OF 40-85. BURLAP MAY BE USED FOR SHORT TERM APPLICATIONS.
2. CUT FABRIC FROM A CONTINUOUS ROLL TO ELIMINATE JOINTS. IF JOINTS ARE NEEDED THEY WILL BE OVERLAPPED TO THE NEXT STAKE.
3. STAKE MATERIALS WILL BE STANDARD 2"x 4" WOOD OR EQUIVALENT METAL WITH A MINIMUM LENGTH OF 3'.
4. SPACE STAKES EVENLY AROUND INLET 3' APART AND DRIVE A MINIMUM 18" DEEP. SPANS GREATER THAN 3' MAY BE BRIDGED WITH THE USE OF WIRE MESH BEHIND THE FILTER FABRIC FOR SUPPORT.
5. FABRIC SHALL BE EMBEDDED 1' MINIMUM BELOW GROUND AND BACKFILLED. IT SHALL BE SECURELY FASTENED TO THE STAKES AND FRAME.
6. A 2" x 4" WOOD FRAME SHALL BE COMPLETED AROUND THE CREST OF THE FABRIC FOR OVER FLOW STABILITY.
7. MAXIMUM DRAINAGE AREA 1 ACRE

ADAPTED FROM DETAILS PROVIDED BY: NEW YORK STATE DEC
ORIGINALLY DEVELOPED BY USDA-NRCS
VERMONT DEPARTMENT OF ENVIRONMENTAL CONSERVATION

FILTER FABRIC DROP INLET PROTECTION

NOTES:
REFER TO "THE VERMONT STANDARDS & SPECIFICATIONS FOR EROSION PREVENTION & SEDIMENT CONTROL -2006- " FROM THE VT AGENCY OF NATURAL RESOURCES FOR ADDITIONAL GUIDANCE.

THIS WORK SHALL BE PERFORMED IN ACCORDANCE WITH SECTION 653 FOR INLET PROTECTION DEVICE, TYPE 1(PAY ITEM 653.40).

REVISIONS	
MARCH 7, 2008	WHF
JANUARY 13, 2009	WHF

PROJECT NAME: JAMAICA
PROJECT NUMBER: ER-BRF 015-1(23)

FILE NAME: sllb316epsc_details.dgn
PROJECT LEADER: K. HIGGINS
DESIGNED BY: K. FRIEDLAND
EPSC DETAILS SHEET 3

PLOT DATE: 07-DEC-2012
DRAWN BY: K. FRIEDLAND
CHECKED BY: G. LAROCHE
SHEET 53 OF 82

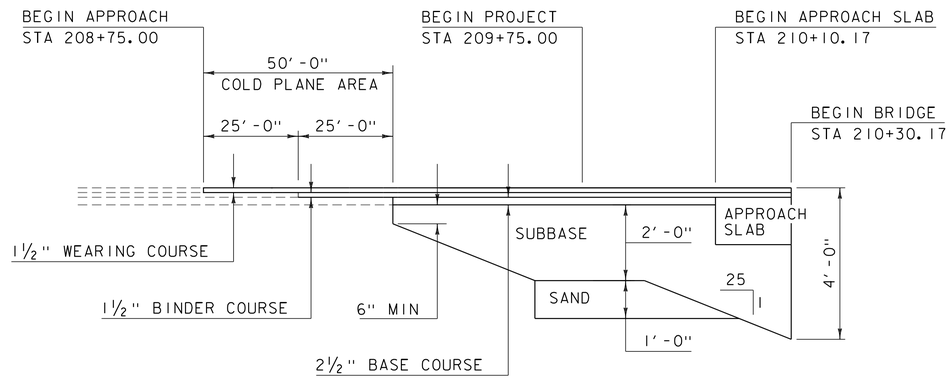

MATERIAL TRANSITION DIAGRAM 1

HOR. SCALE 1" = 20'-0"
NO VERT. SCALE

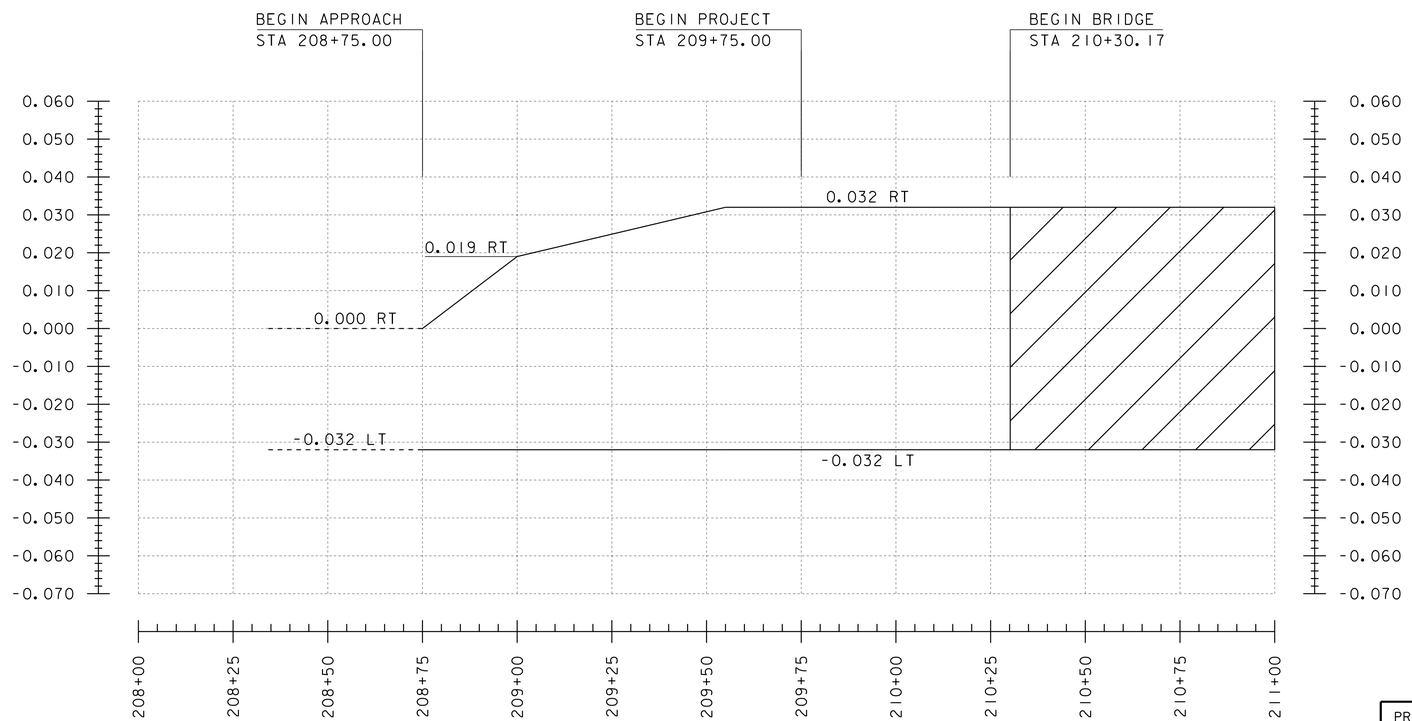

BANKING DIAGRAM 1

HORIZONTAL SCALE 1" = 20'
VERTICAL NOT TO SCALE

PROJECT NAME: JAMAICA	
PROJECT NUMBER: ER-BRF 015-1(23)	
FILE NAME: sllb316.xs.dgn	PLOT DATE: 07-DEC-2012
PROJECT LEADER: K. HIGGINS	DRAWN BY: K. FRIEDLAND
DESIGNED BY: G. LAROCHE	CHECKED BY: G. LAROCHE
MATERIAL TRANSITION / BANKING DIAGRAM 1	SHEET 54 OF 82

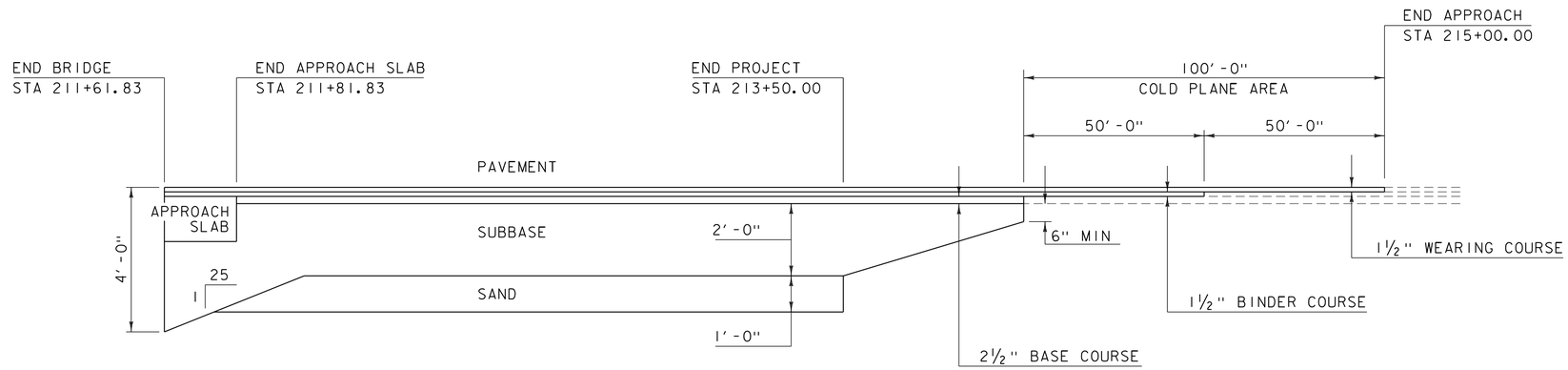

MATERIAL TRANSITION DIAGRAM 2

HOR. SCALE 1" = 20'-0"
NO VERT. SCALE

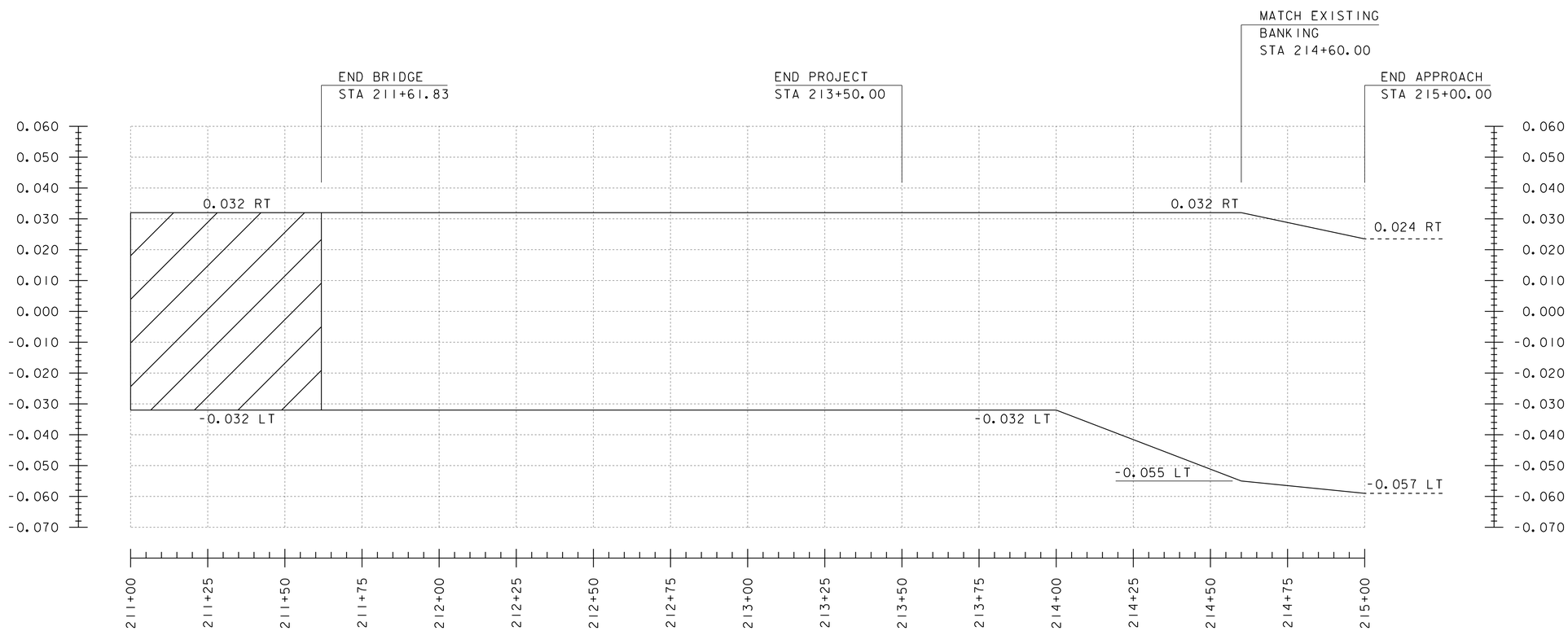

BANKING DIAGRAM 2

HORIZONTAL SCALE 1" = 20'
VERTICAL NOT TO SCALE

PROJECT NAME: JAMAICA	
PROJECT NUMBER: ER-BRF 015-1(23)	
FILE NAME: sllb316.xs.dgn	PLOT DATE: 07-DEC-2012
PROJECT LEADER: K. HIGGINS	DRAWN BY: K. FRIEDLAND
DESIGNED BY: G. LAROCHE	CHECKED BY: G. LAROCHE
MATERIAL TRANSITION /BANKING DIAGRAM 2	SHEET 55 OF 82

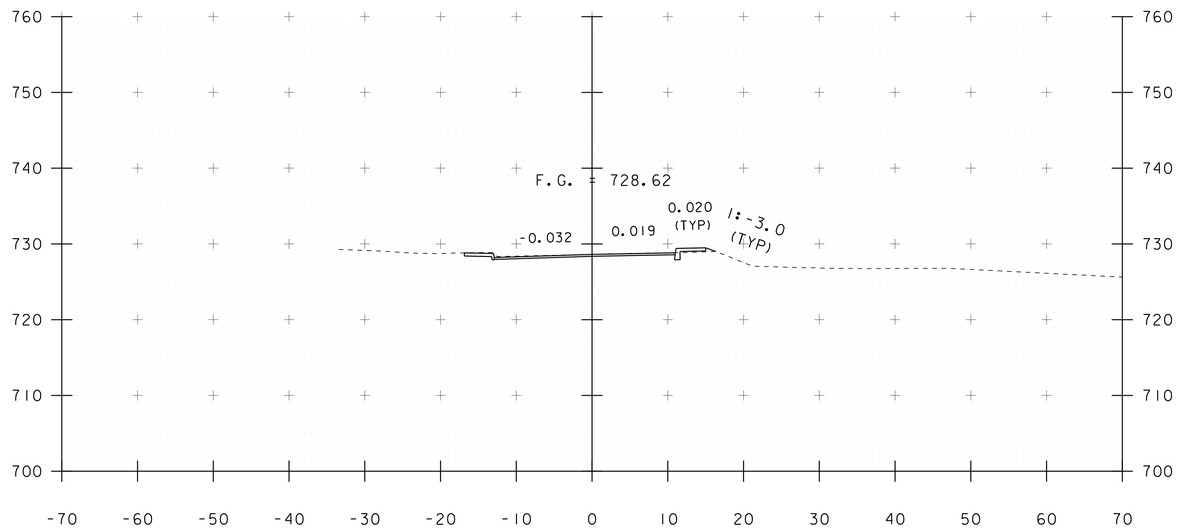

209+00

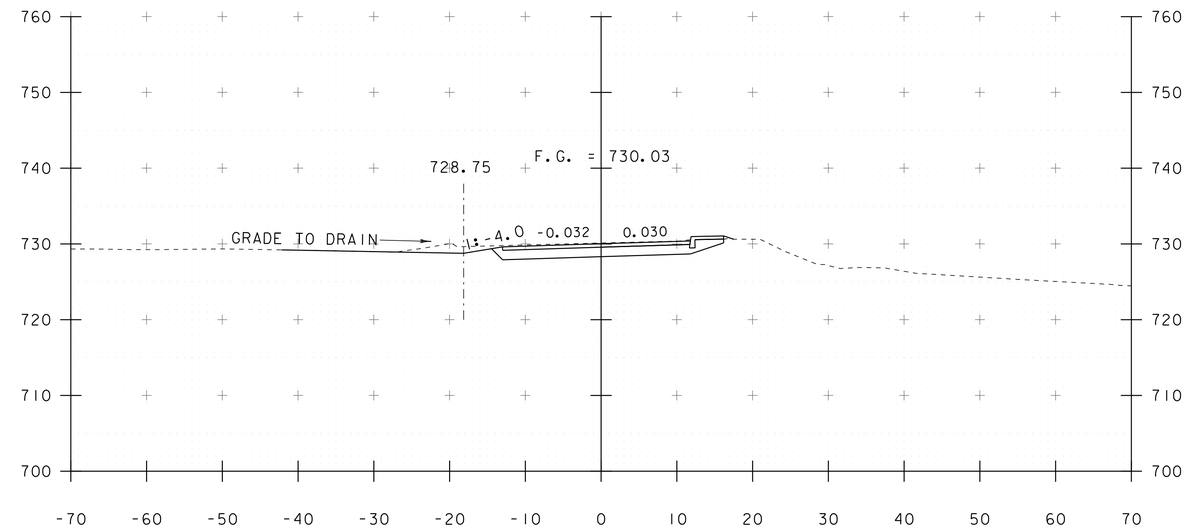

209+50

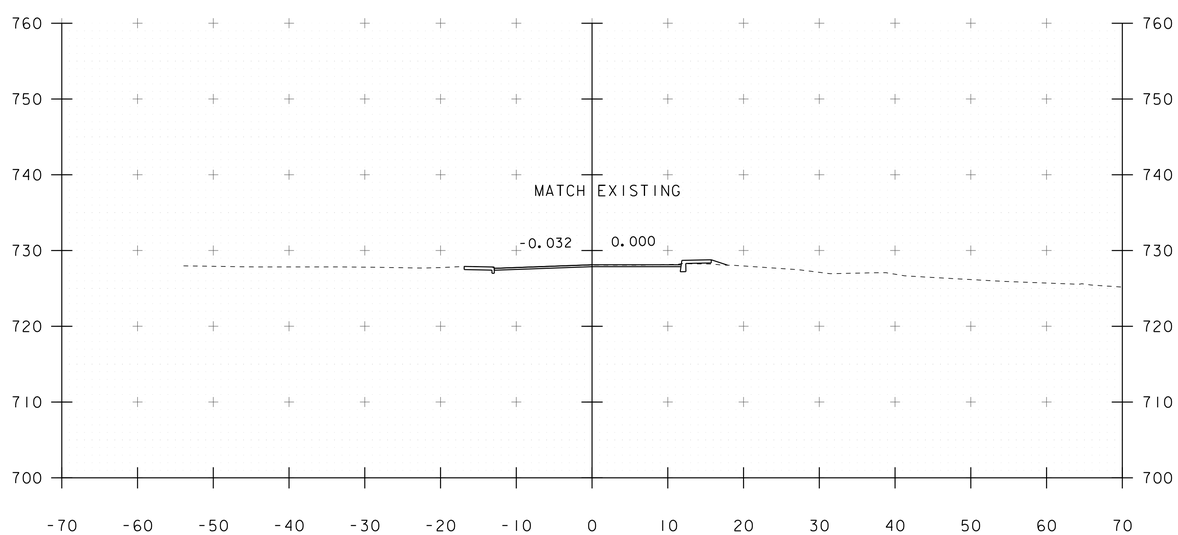

208+75
BEGIN APPROACH

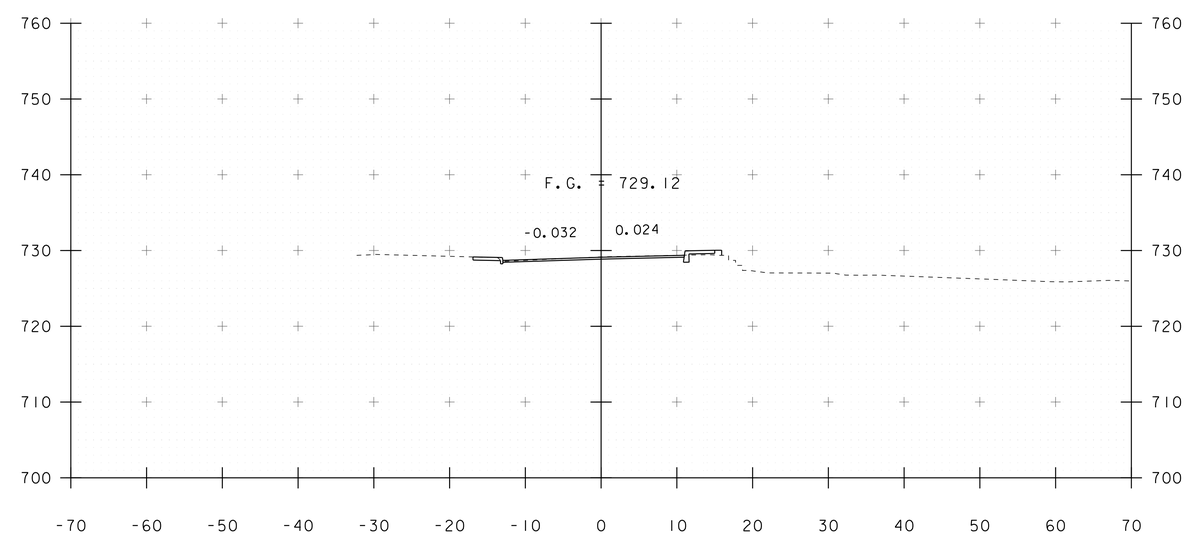

209+20

SCALE 1" = 10'-0"
10 0 10

STA. 208+75 TO STA. 209+50

PROJECT NAME: JAMAICA	
PROJECT NUMBER: ER-BRF 015-1(23)	
FILE NAME: sllb316.xs.dgn	PLOT DATE: 07-DEC-2012
PROJECT LEADER: K. HIGGINS	DRAWN BY: K. FRIEDLAND
DESIGNED BY: G. LAROCHE	CHECKED BY: G. LAROCHE
MAINLINE SECTIONS 1	SHEET 56 OF 82

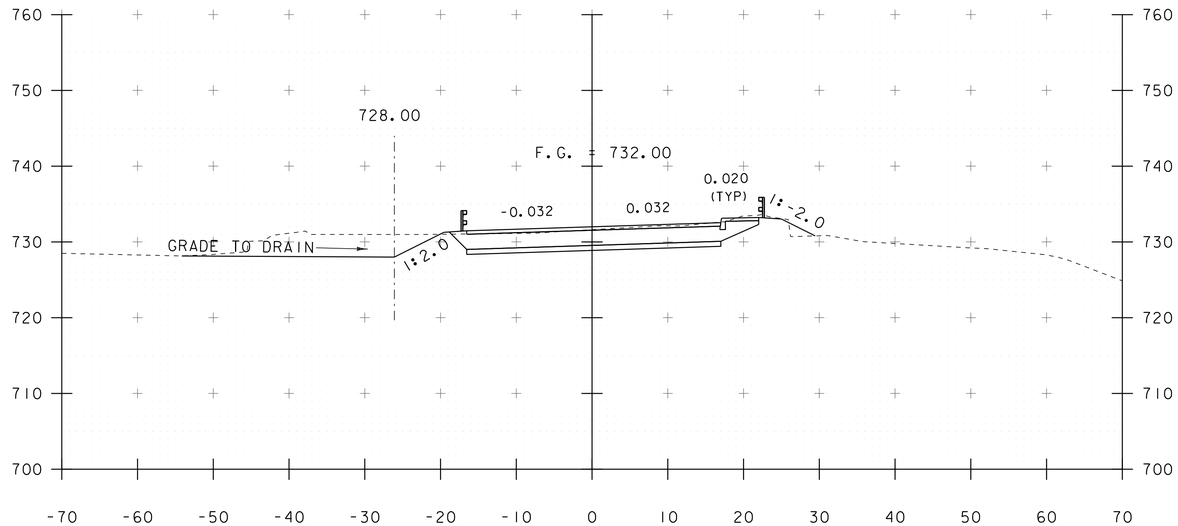

210+00

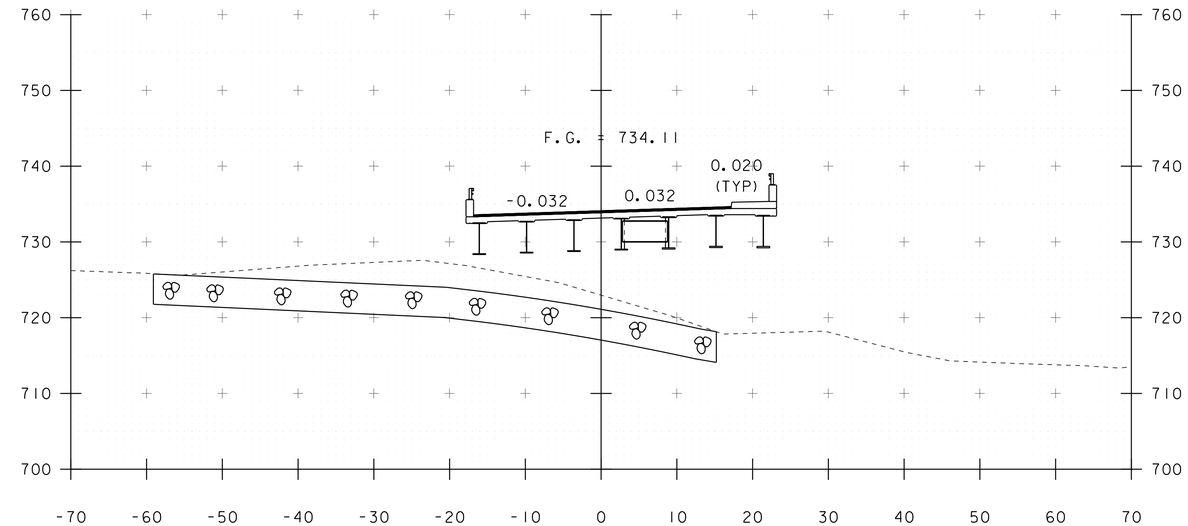

210+50
BEGIN BRIDGE 210+30.17

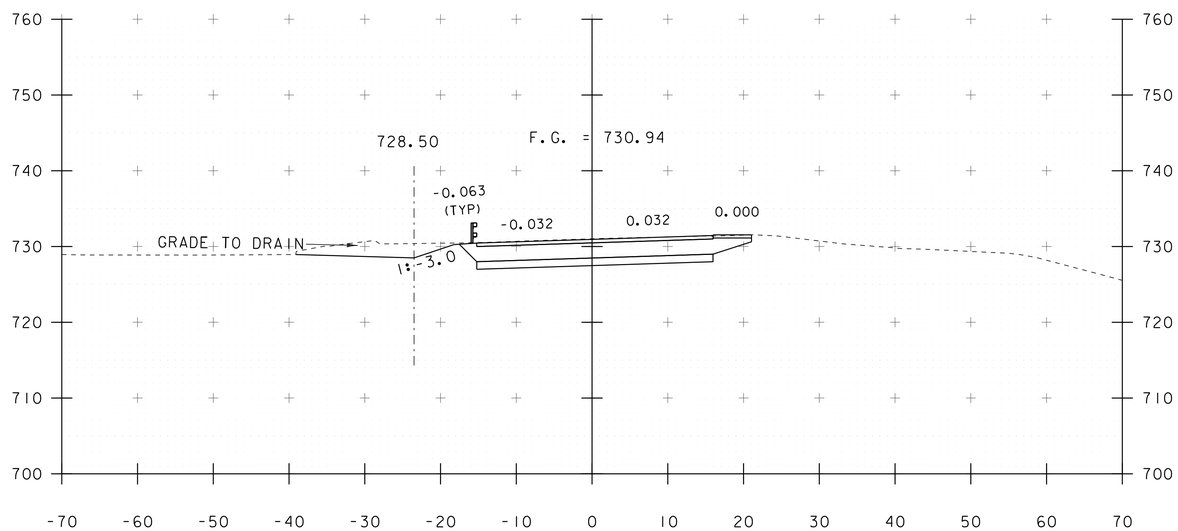

209+75
BEGIN PROJECT

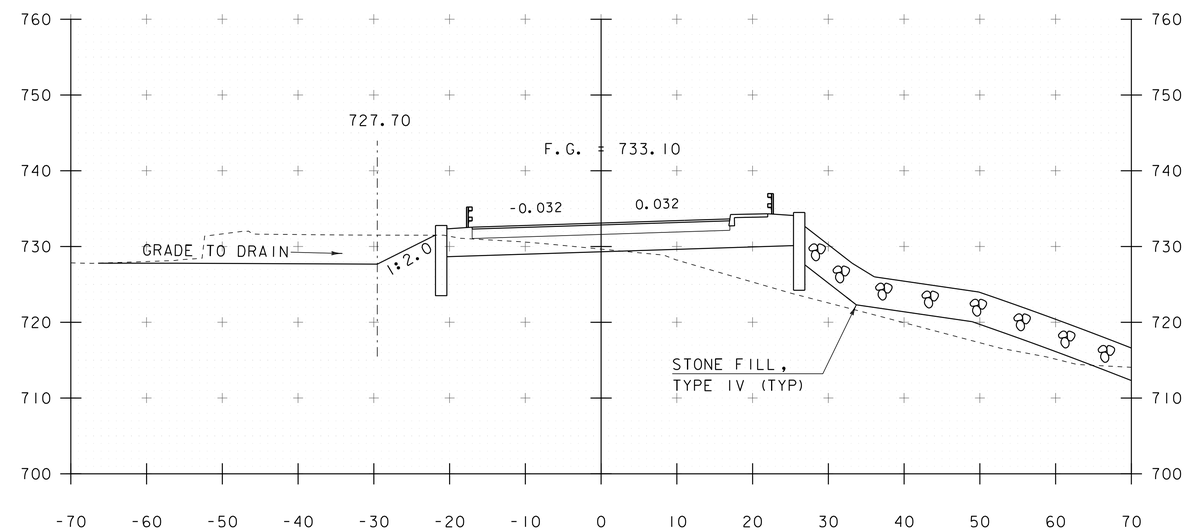

210+25

SCALE 1" = 10'-0"
10 0 10

STA. 209+75 TO STA. 210+50

PROJECT NAME: JAMAICA	
PROJECT NUMBER: ER-BRF 015-1(23)	
FILE NAME: sllb316.xs.dgn	PLOT DATE: 07-DEC-2012
PROJECT LEADER: K. HIGGINS	DRAWN BY: K. FRIEDLAND
DESIGNED BY: G. LAROCHE	CHECKED BY: G. LAROCHE
MAINLINE SECTIONS 2	SHEET 57 OF 82

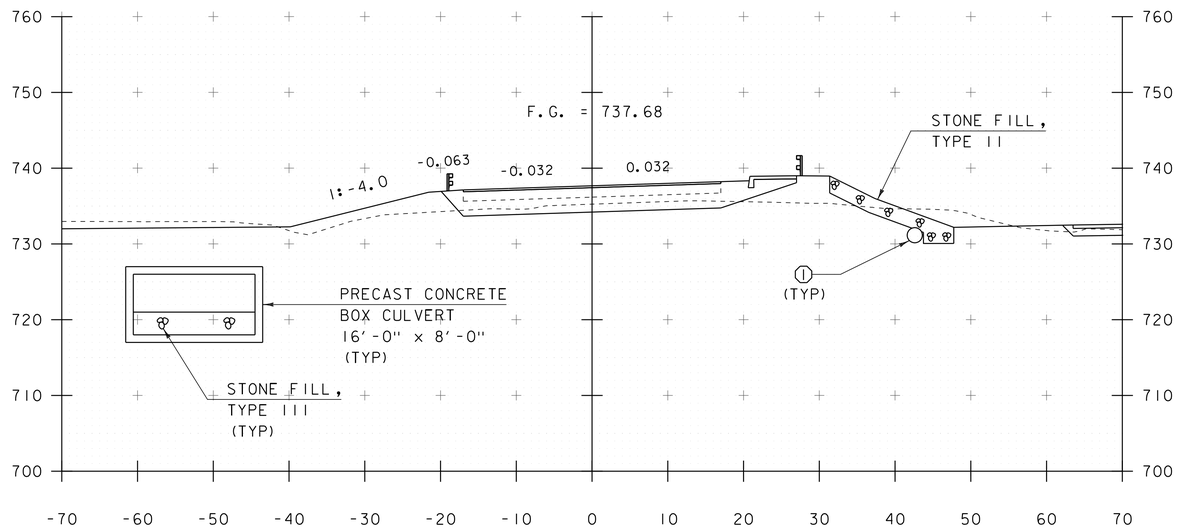

211+75

END BRIDGE 211+61.83

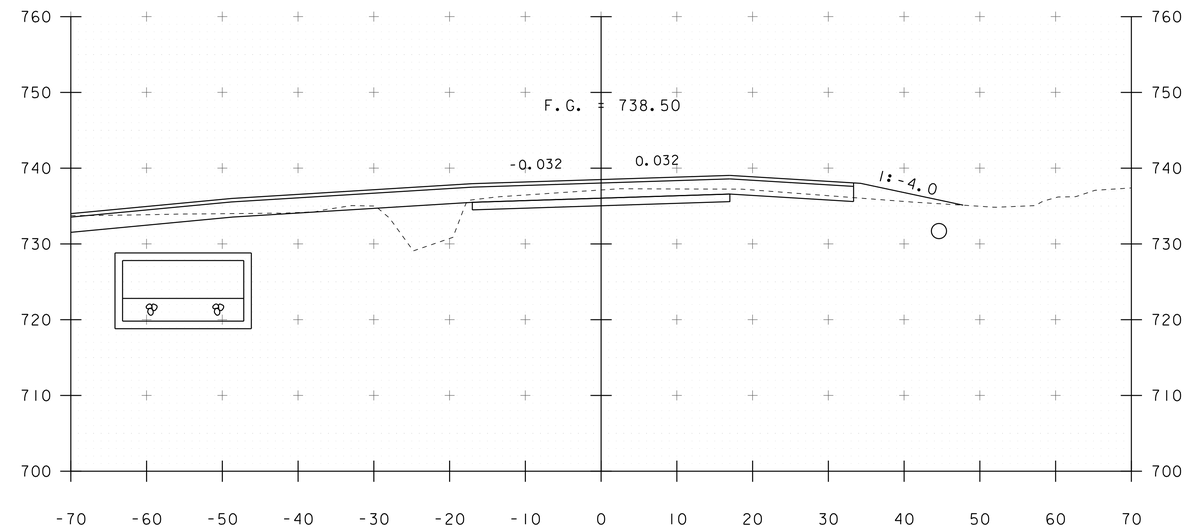

212+25

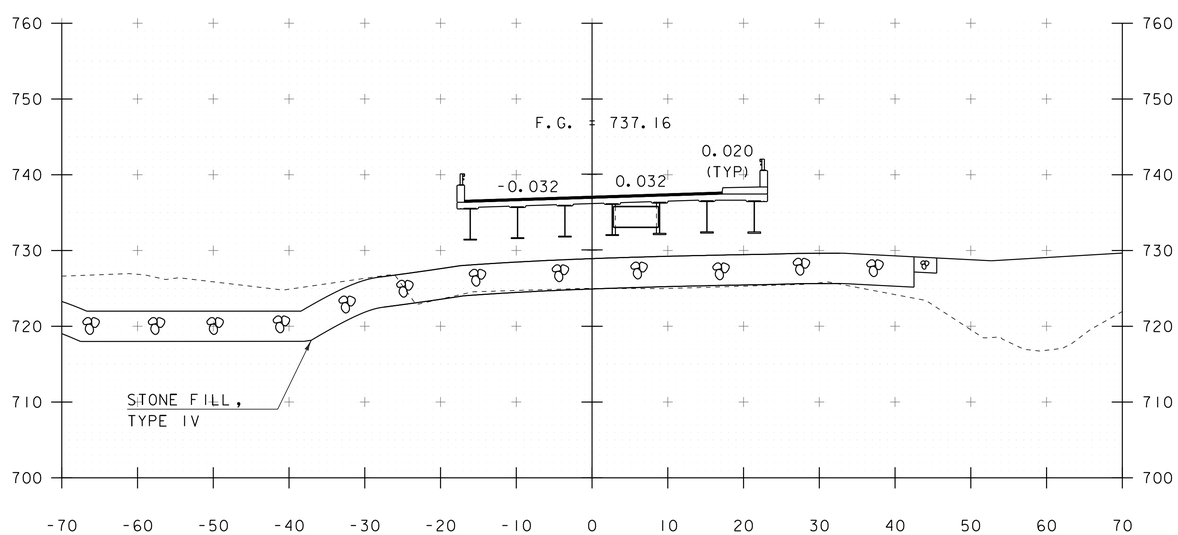

211+50

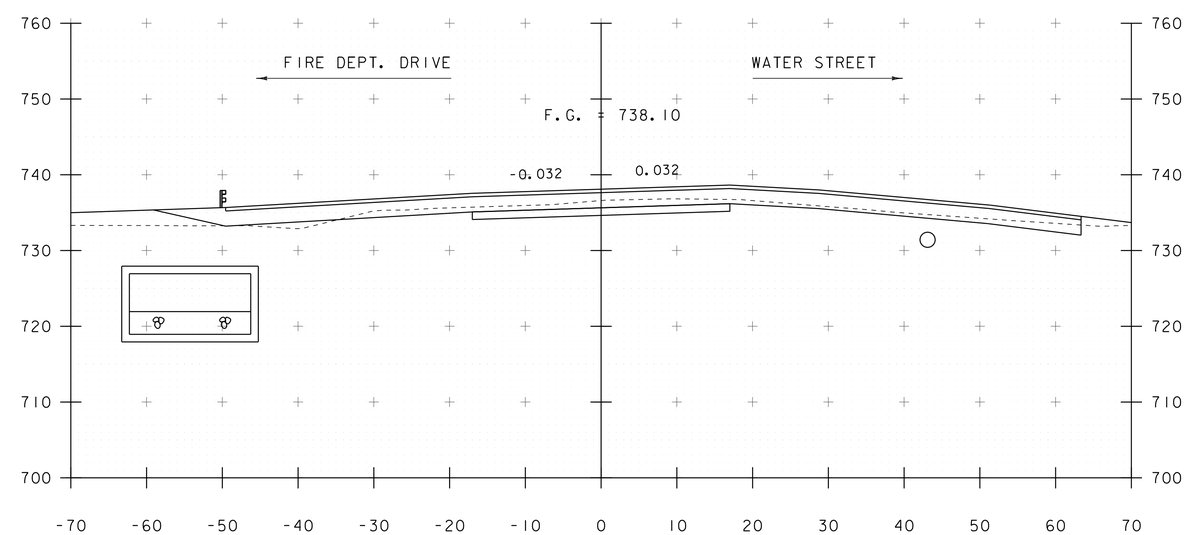

212+00

SCALE 1" = 10'-0"
10 0 10

STA. 211+50 TO STA. 212+25

PROJECT NAME: JAMAICA	
PROJECT NUMBER: ER-BRF 015-1(23)	
FILE NAME: sllb316.xs.dgn	PLOT DATE: 07-DEC-2012
PROJECT LEADER: K. HIGGINS	DRAWN BY: K. FRIEDLAND
DESIGNED BY: G. LAROCHE	CHECKED BY: G. LAROCHE
MAINLINE SECTIONS 3	SHEET 58 OF 82

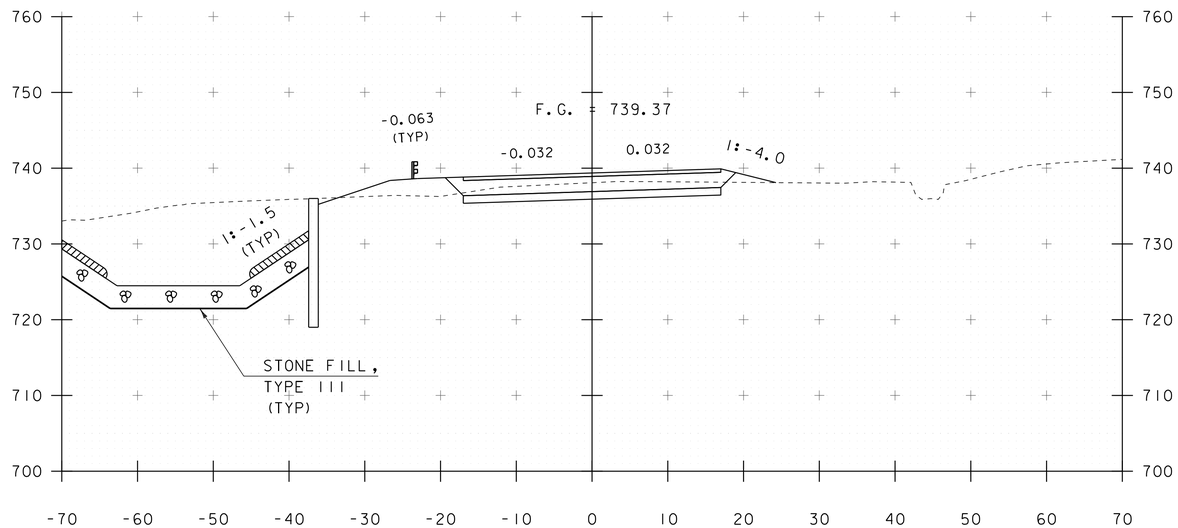

212+75

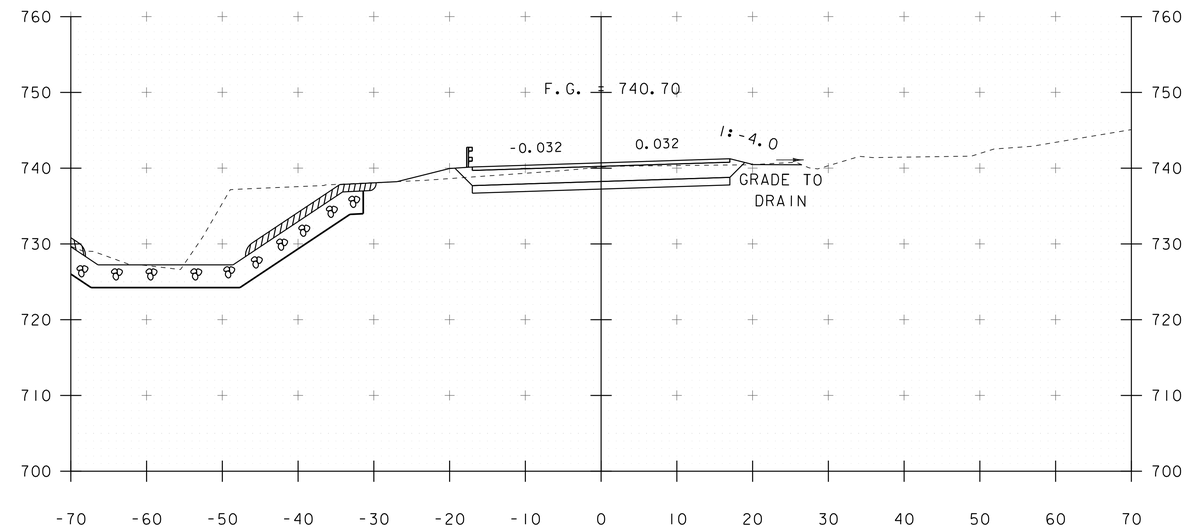

213+25

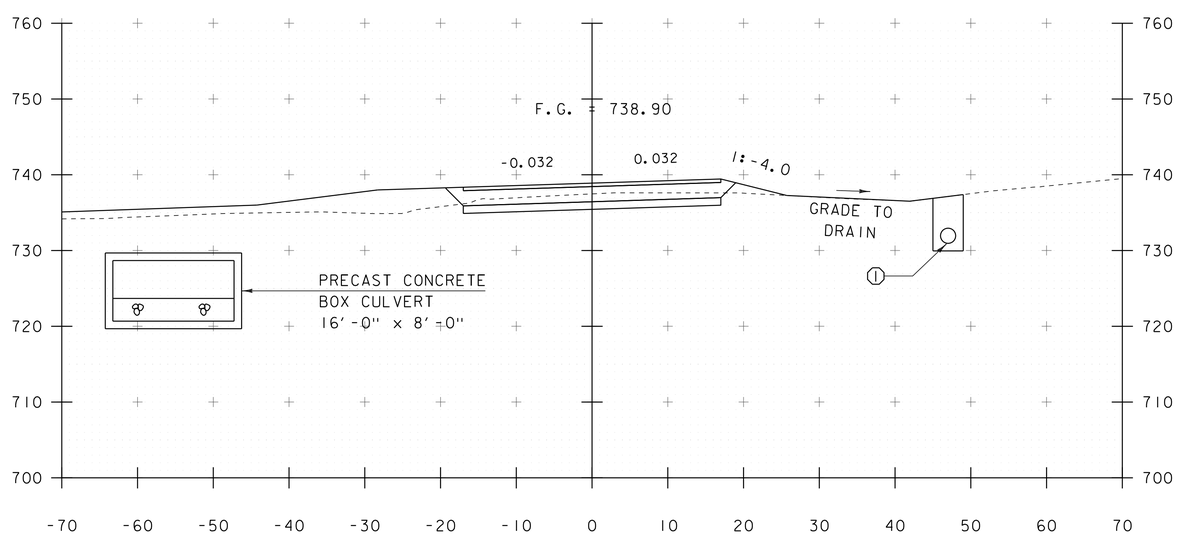

212+50

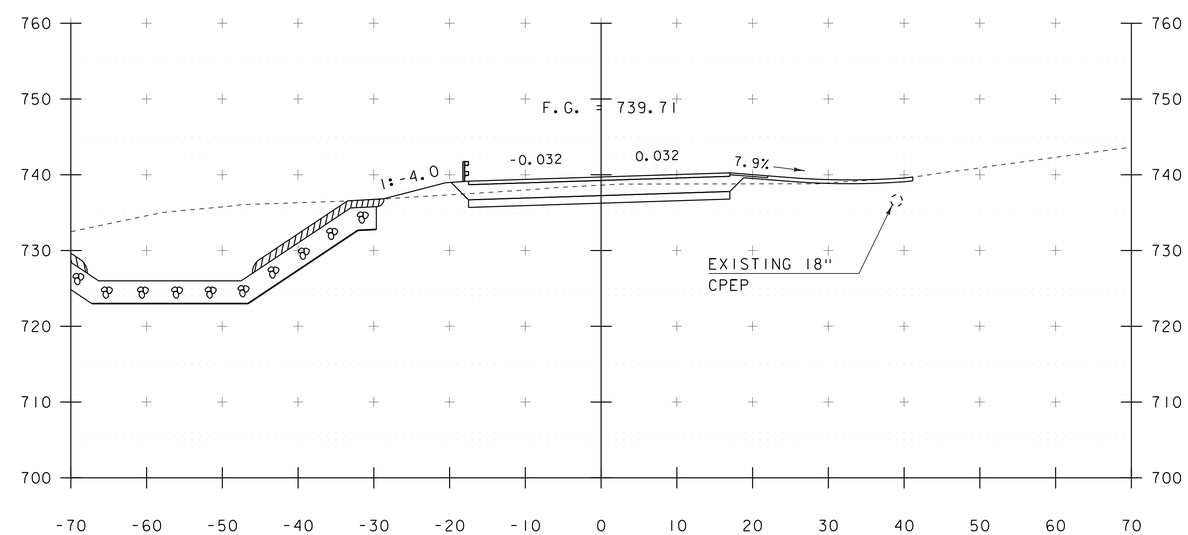

212+90

SCALE 1" = 10'-0"
10 0 10

STA. 212+50 TO STA. 213+25

PROJECT NAME: JAMAICA	
PROJECT NUMBER: ER-BRF 015-1(23)	
FILE NAME: sllb316.xs.dgn	PLOT DATE: 07-DEC-2012
PROJECT LEADER: K. HIGGINS	DRAWN BY: K. FRIEDLAND
DESIGNED BY: G. LAROCHE	CHECKED BY: G. LAROCHE
MAINLINE SECTIONS 4	SHEET 59 OF 82

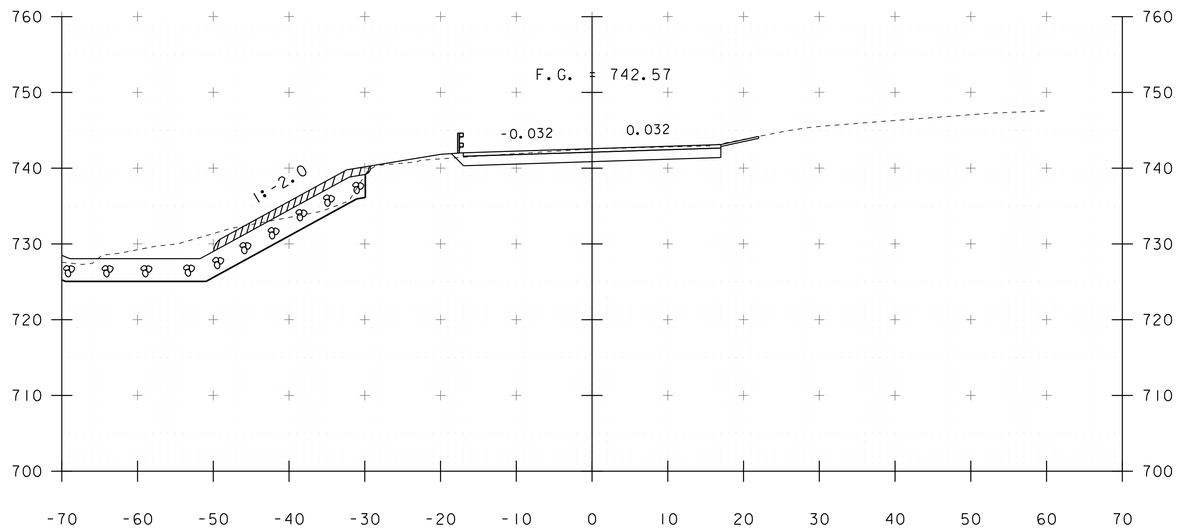

213+75

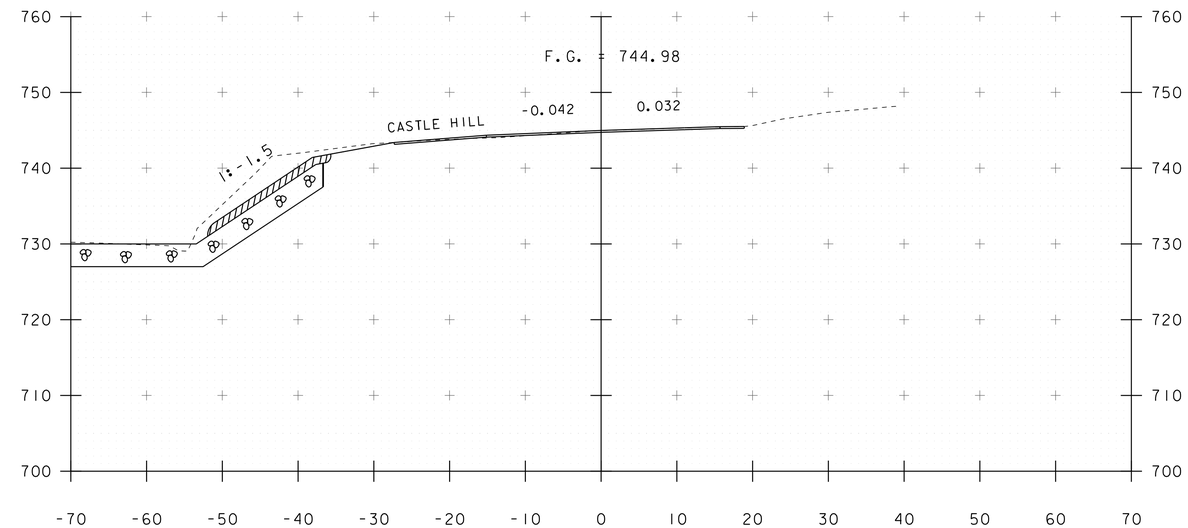

214+25

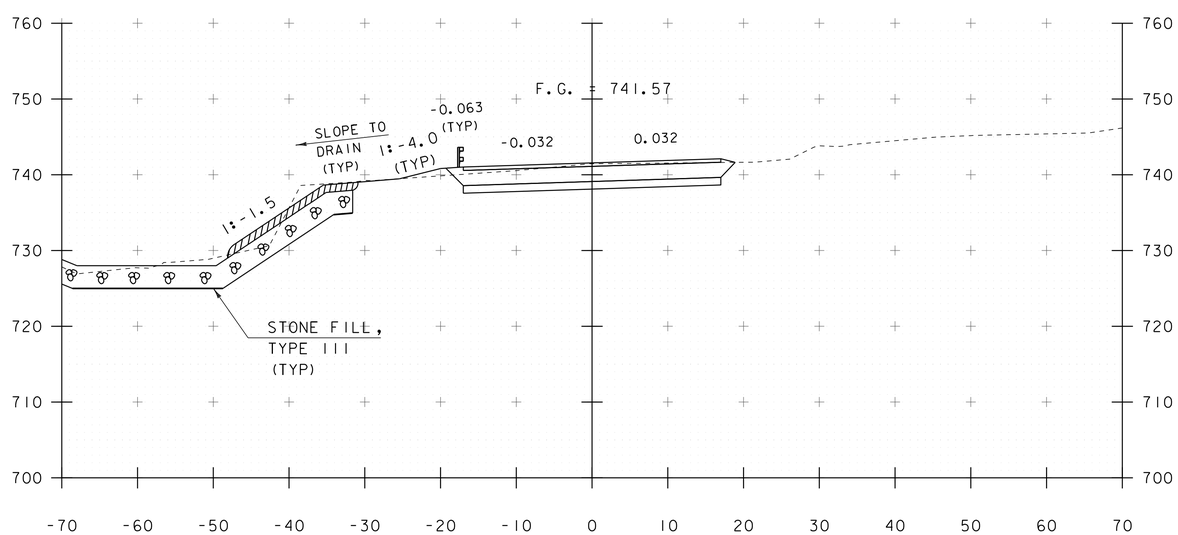

213+50
END PROJECT

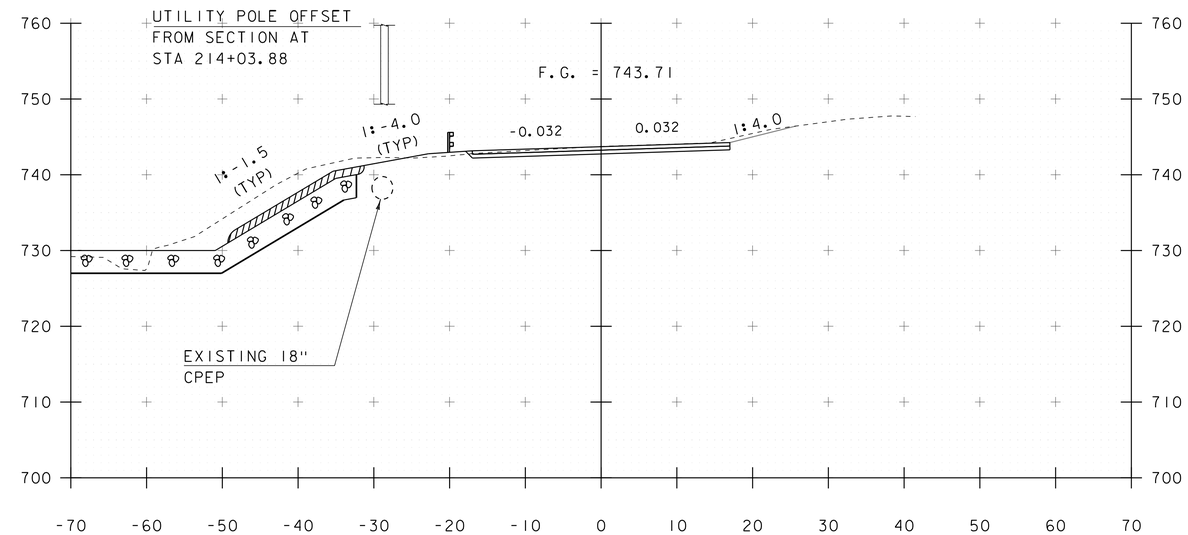

214+00

SCALE 1" = 10'-0"
10 0 10

STA. 213+50 TO STA. 214+25

PROJECT NAME: JAMAICA	
PROJECT NUMBER: ER-BRF 015-1(23)	
FILE NAME: sllb316.xs.dgn	PLOT DATE: 07-DEC-2012
PROJECT LEADER: K. HIGGINS	DRAWN BY: K. FRIEDLAND
DESIGNED BY: G. LAROCHE	CHECKED BY: G. LAROCHE
MAINLINE SECTIONS 5	SHEET 60 OF 82

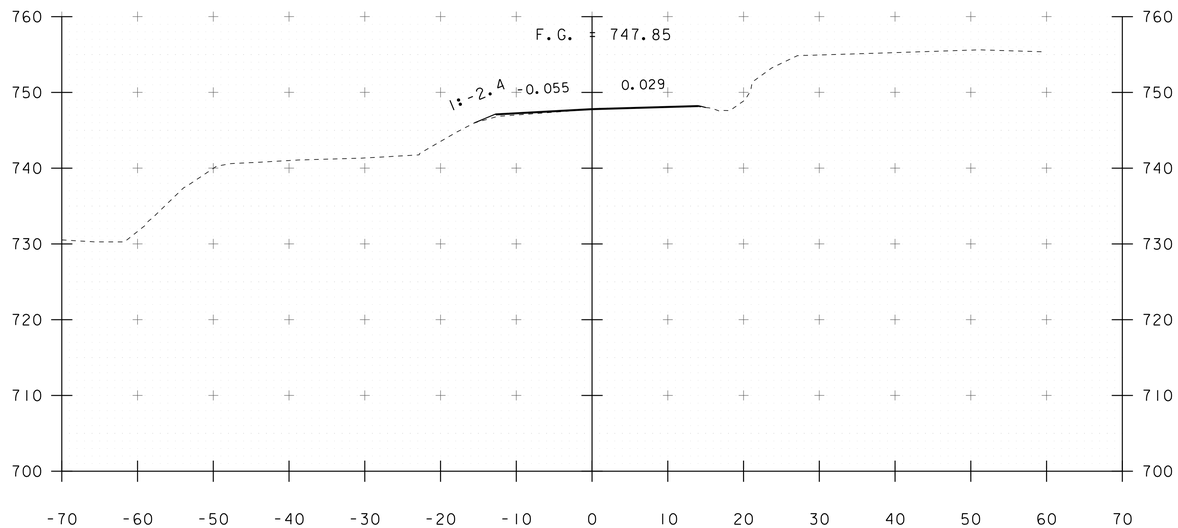

214+75

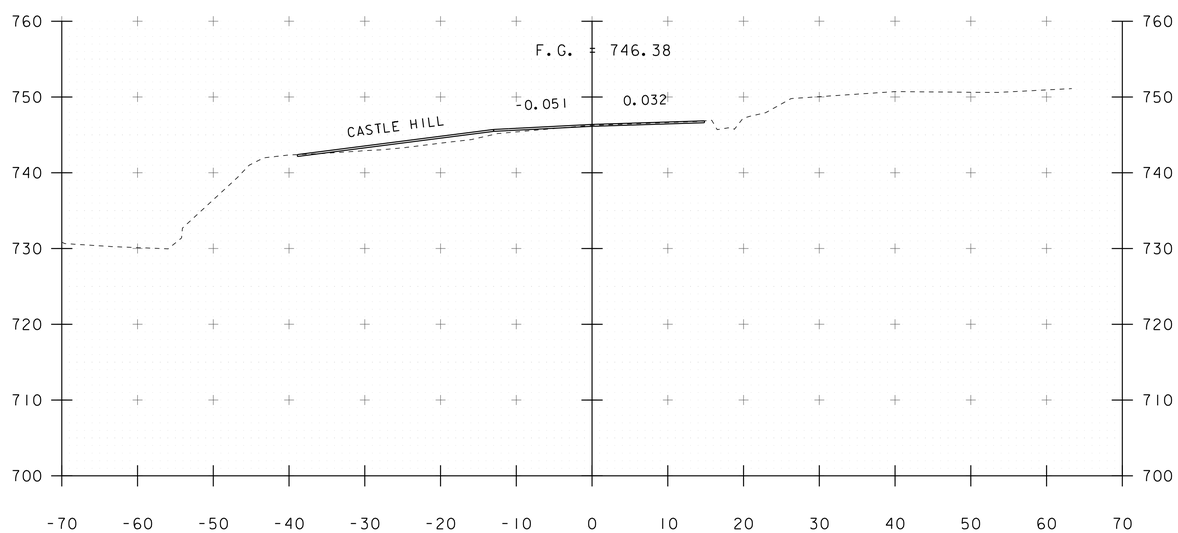

214+50

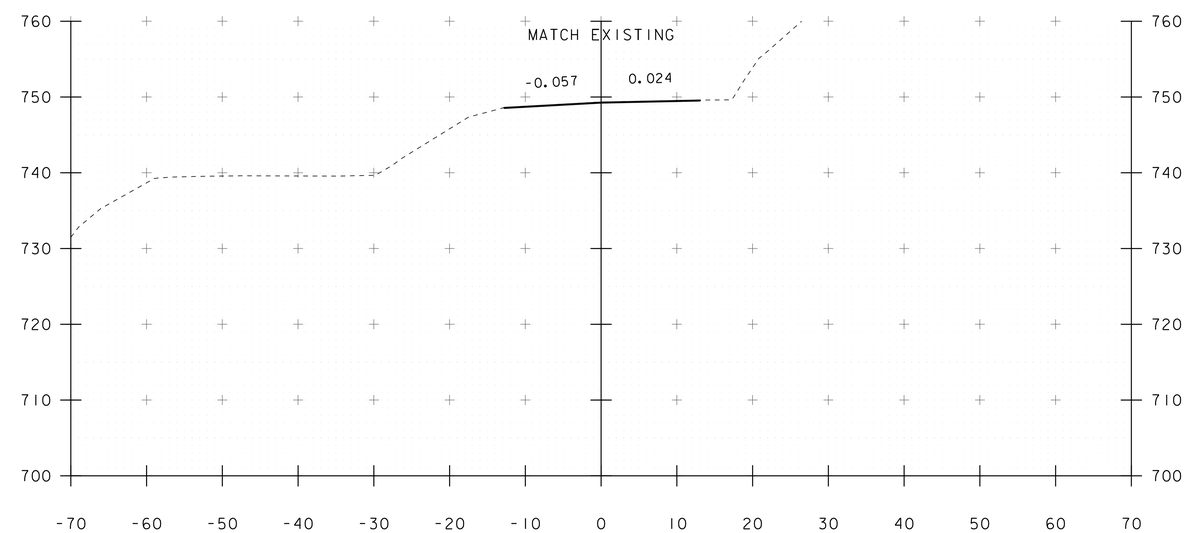

215+00
END APPROACH

SCALE 1" = 10'-0"
10 0 10

STA. 214+50 TO STA. 215+00

PROJECT NAME: JAMAICA	
PROJECT NUMBER: ER-BRF 015-1(23)	
FILE NAME: sllb316.xs.dgn	PLOT DATE: 07-DEC-2012
PROJECT LEADER: K. HIGGINS	DRAWN BY: K. FRIEDLAND
DESIGNED BY: G. LAROCHE	CHECKED BY: G. LAROCHE
MAINLINE SECTIONS 6	SHEET 61 OF 82

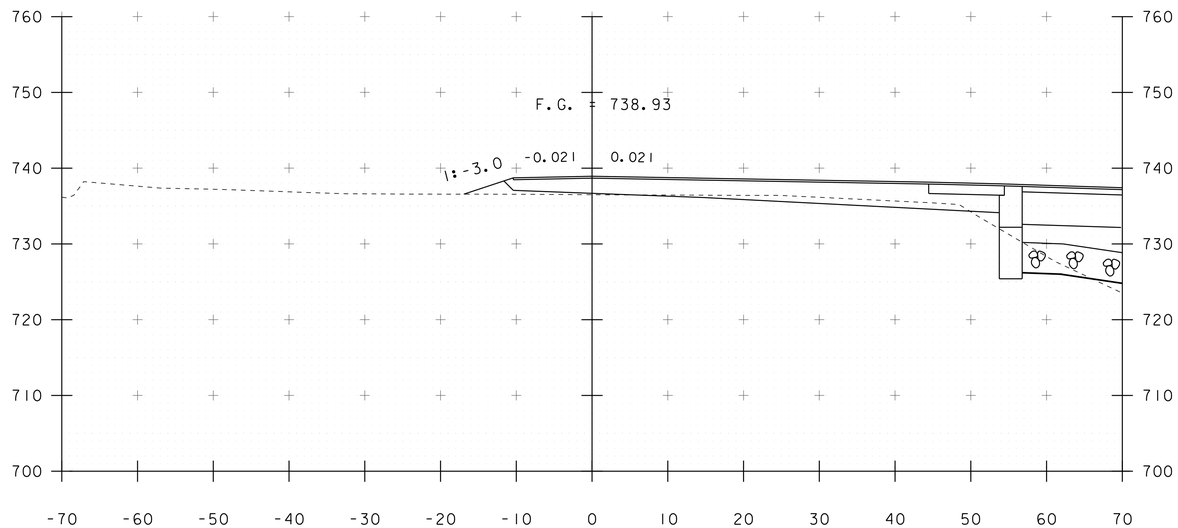

30+25

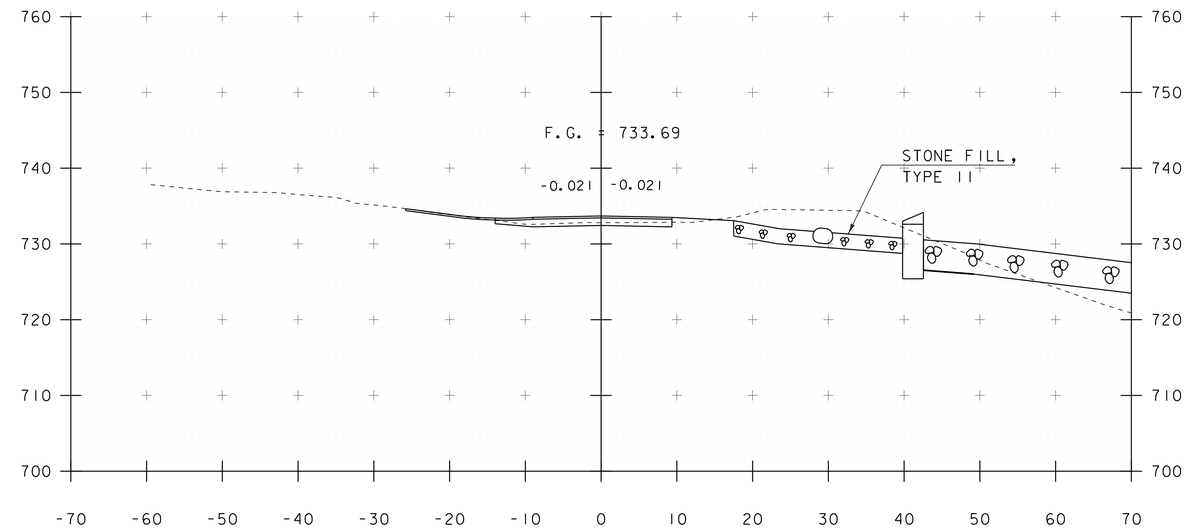

30+75

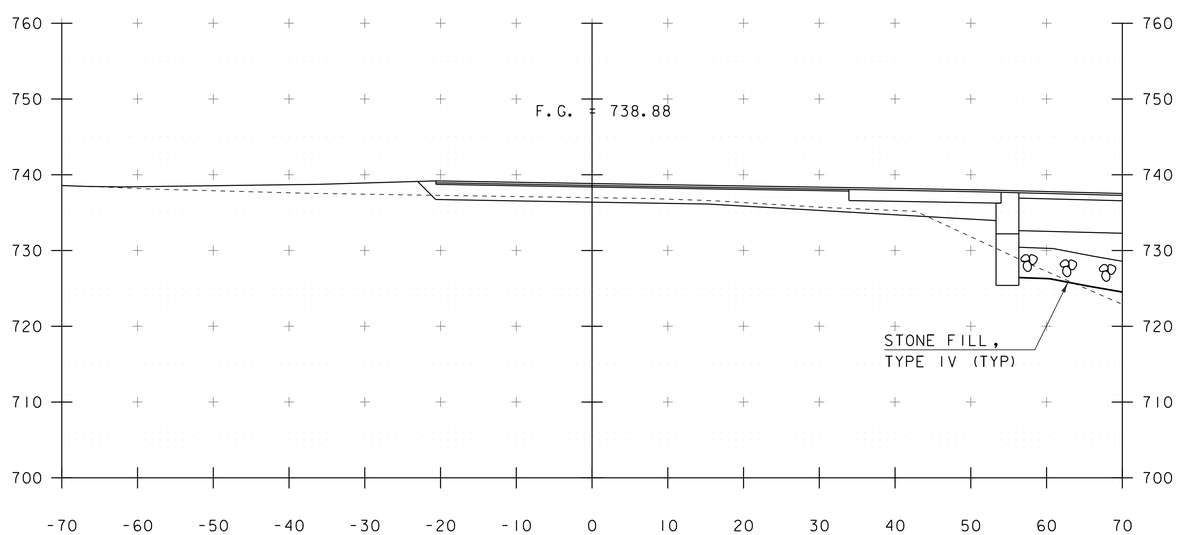

30+17
BEGIN WATER ST

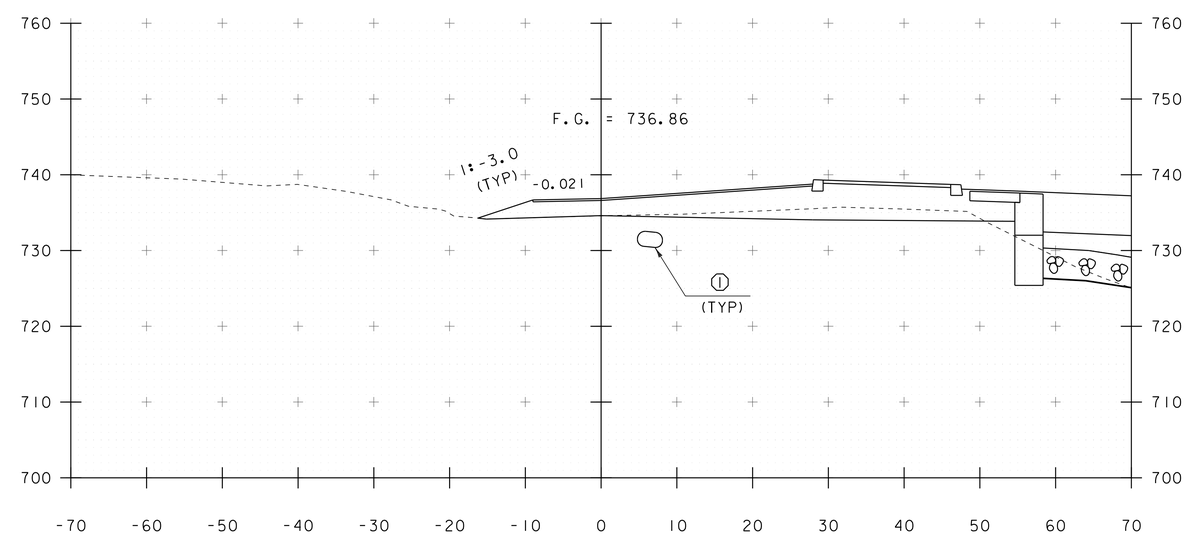

30+50

SCALE 1" = 10'-0"
10 0 10

STA. 30+17 TO STA. 30+75

PROJECT NAME: JAMAICA	
PROJECT NUMBER: ER-BRF 015-1(23)	
FILE NAME: sllb316.xs.dgn	PLOT DATE: 07-DEC-2012
PROJECT LEADER: K. HIGGINS	DRAWN BY: K. FRIEDLAND
DESIGNED BY: G. LAROCHE	CHECKED BY: G. LAROCHE
WATER STREET SECTIONS 1	SHEET 62 OF 82

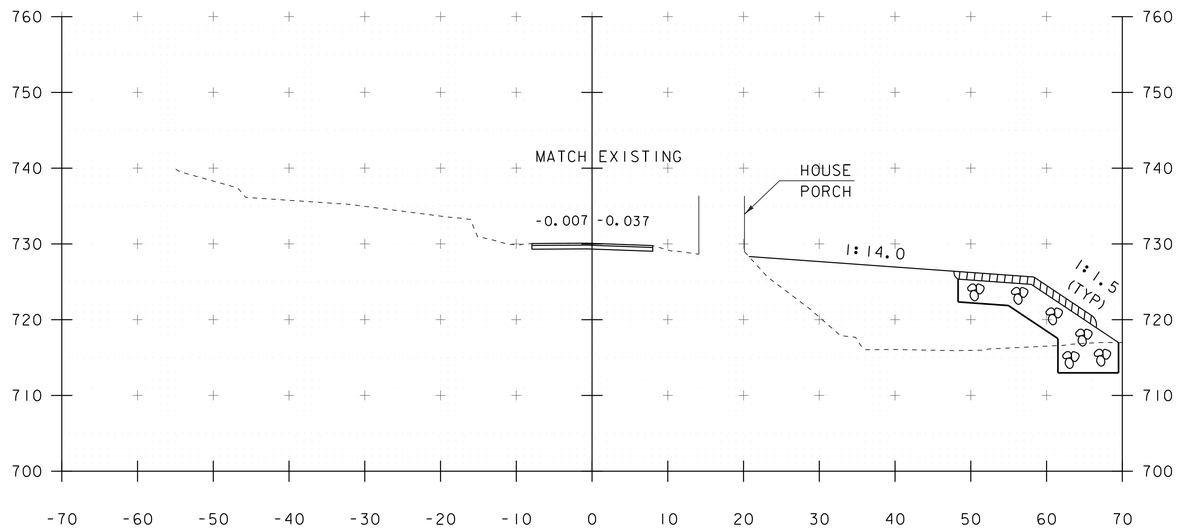

31+25
END WATER ST

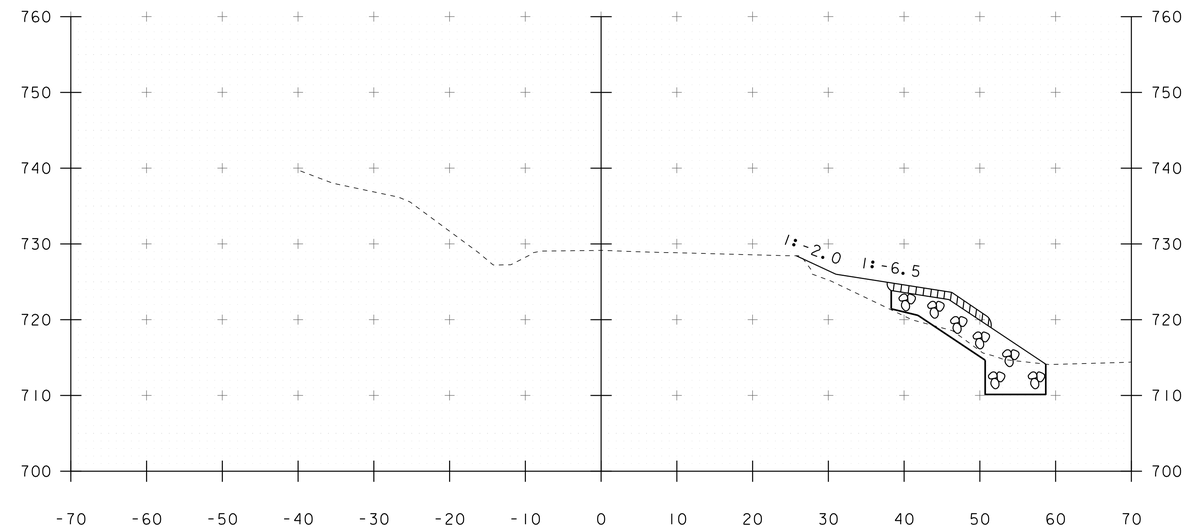

31+75

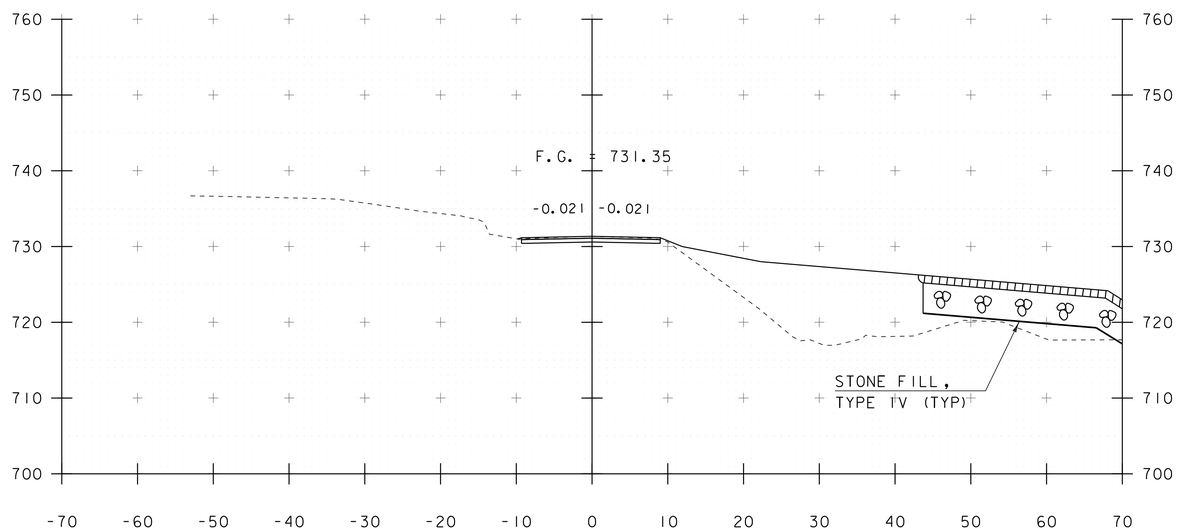

31+00

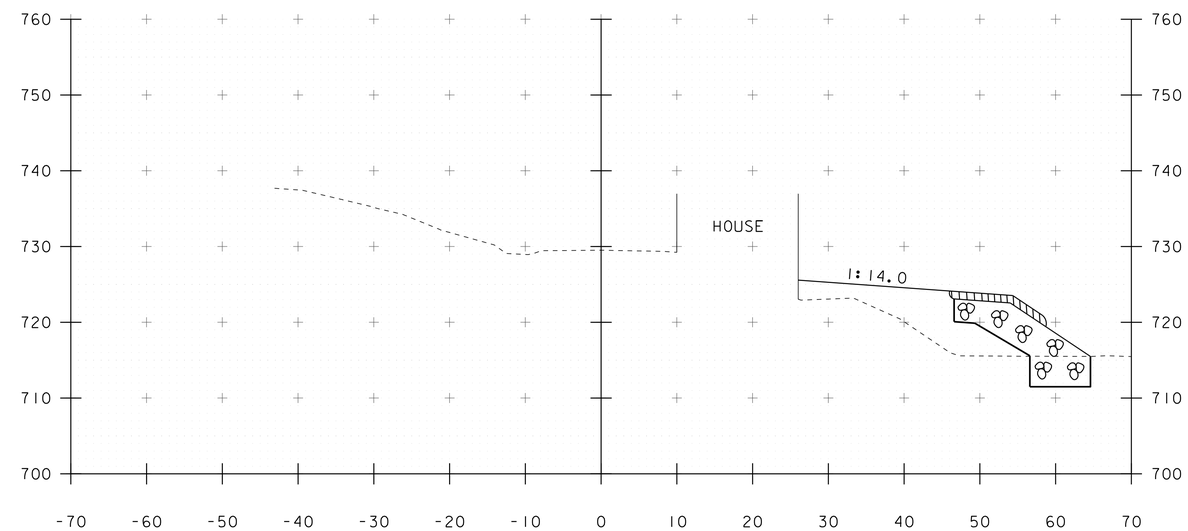

31+50

SCALE 1" = 10'-0"
10 0 10

STA. 31+00 TO STA. 31+75

PROJECT NAME: JAMAICA	
PROJECT NUMBER: ER-BRF 015-1(23)	
FILE NAME: sllb316.xs.dgn	PLOT DATE: 07-DEC-2012
PROJECT LEADER: K. HIGGINS	DRAWN BY: K. FRIEDLAND
DESIGNED BY: G. LAROCHE	CHECKED BY: G. LAROCHE
WATER STREET SECTIONS 2	SHEET 63 OF 82

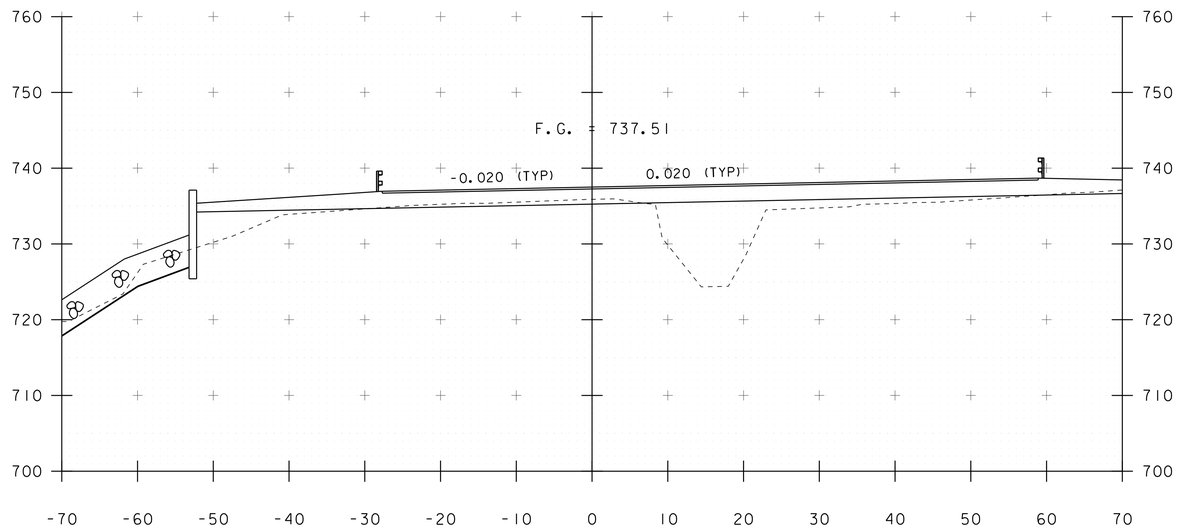

20+25

BEGIN FIRE DRIVE @ 20+17.00

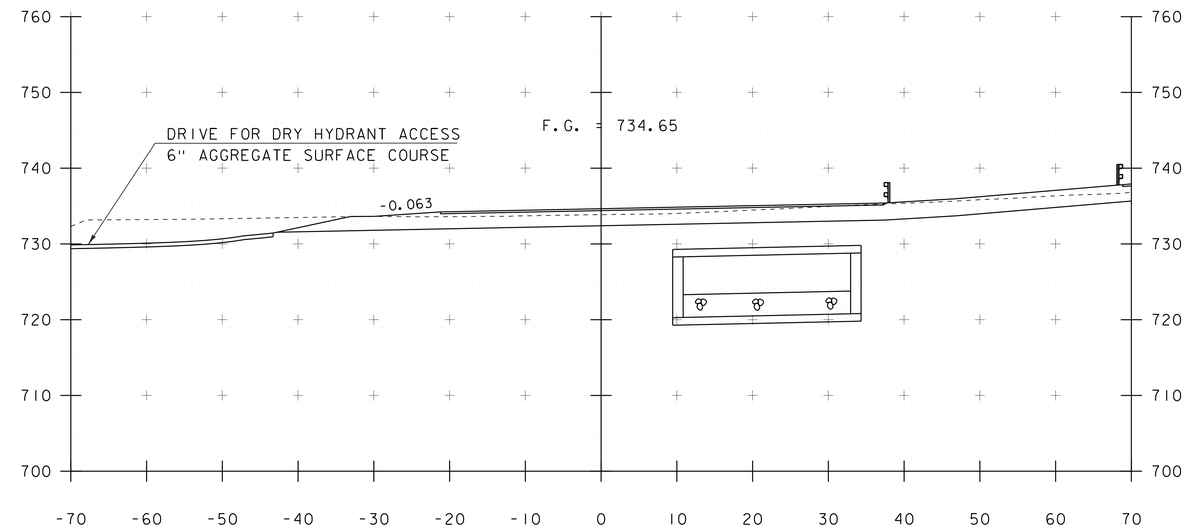

20+75

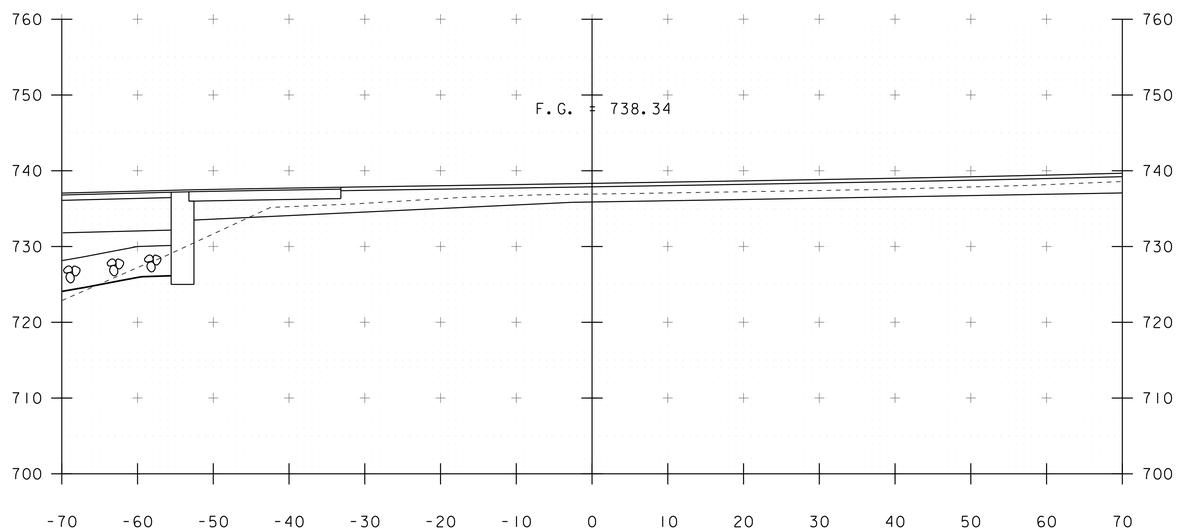

20+00

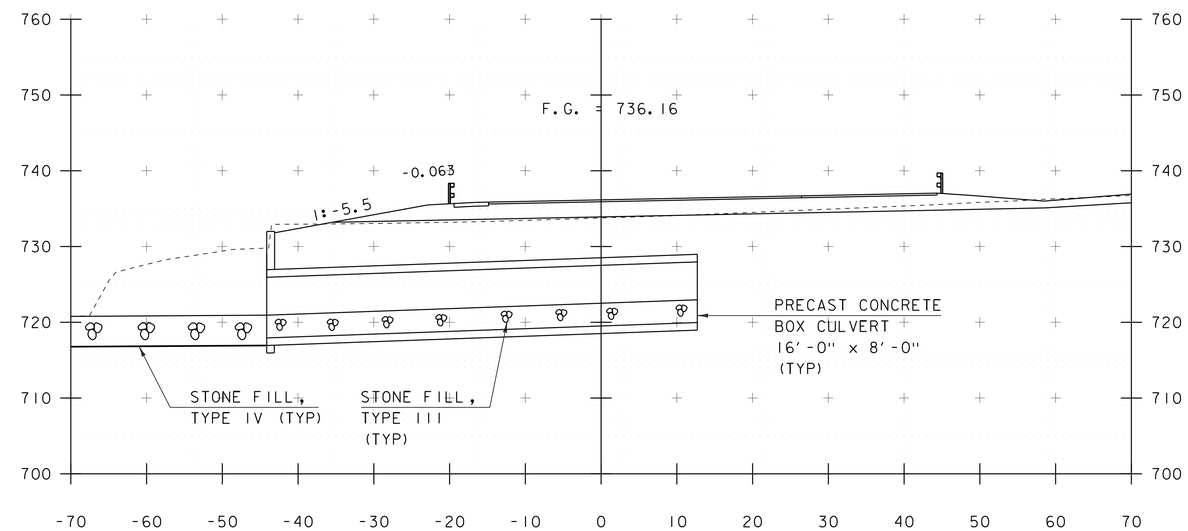

20+50

SCALE 1" = 10'-0"
10 0 10

STA. 20+00 TO STA. 20+75

PROJECT NAME: JAMAICA	
PROJECT NUMBER: ER-BRF 015-1(23)	
FILE NAME: sllb316.xs.dgn	PLOT DATE: 07-DEC-2012
PROJECT LEADER: K. HIGGINS	DRAWN BY: K. FRIEDLAND
DESIGNED BY: G. LAROCHE	CHECKED BY: G. LAROCHE
FIRE DRIVE SECTIONS 1	SHEET 64 OF 82

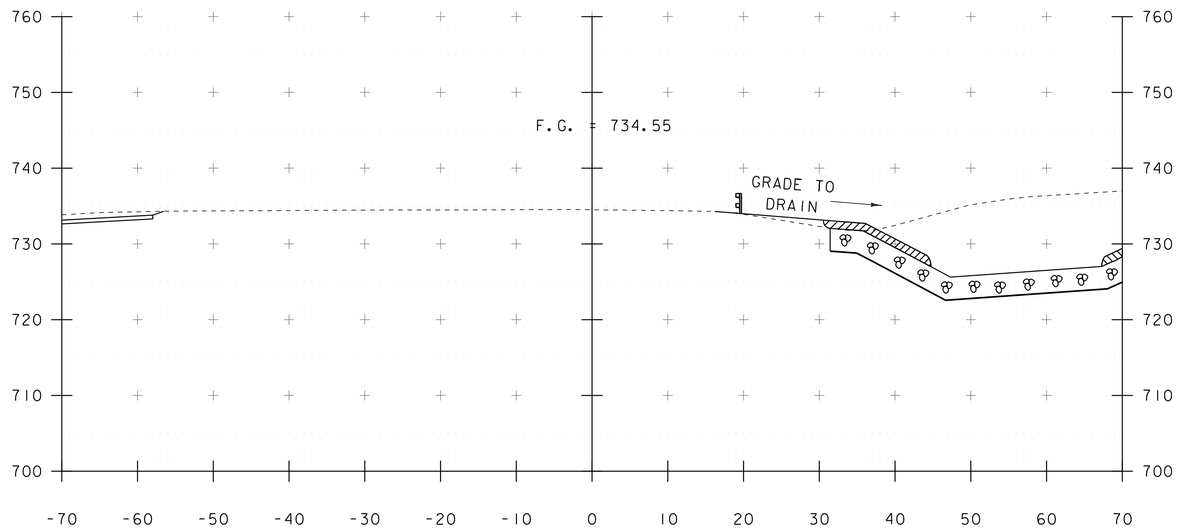

21+25

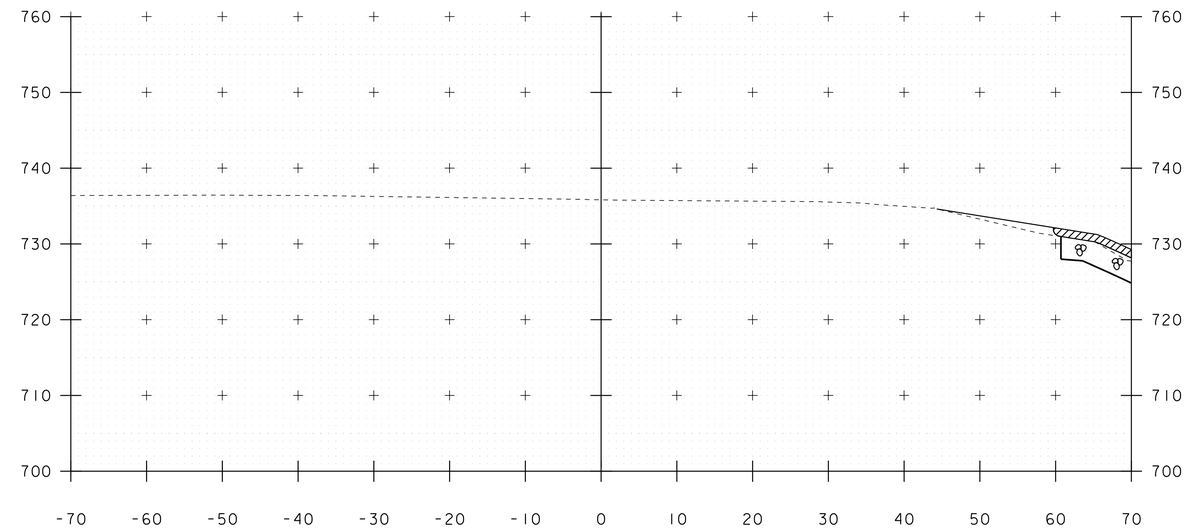

21+75

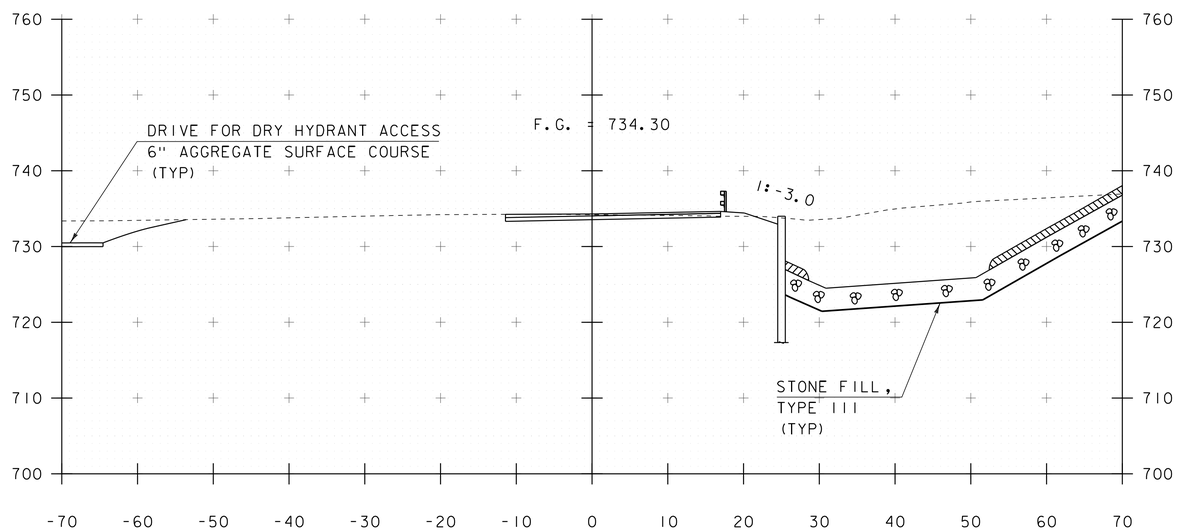

21+00

END FIRE DRIVE @ 21+08.77

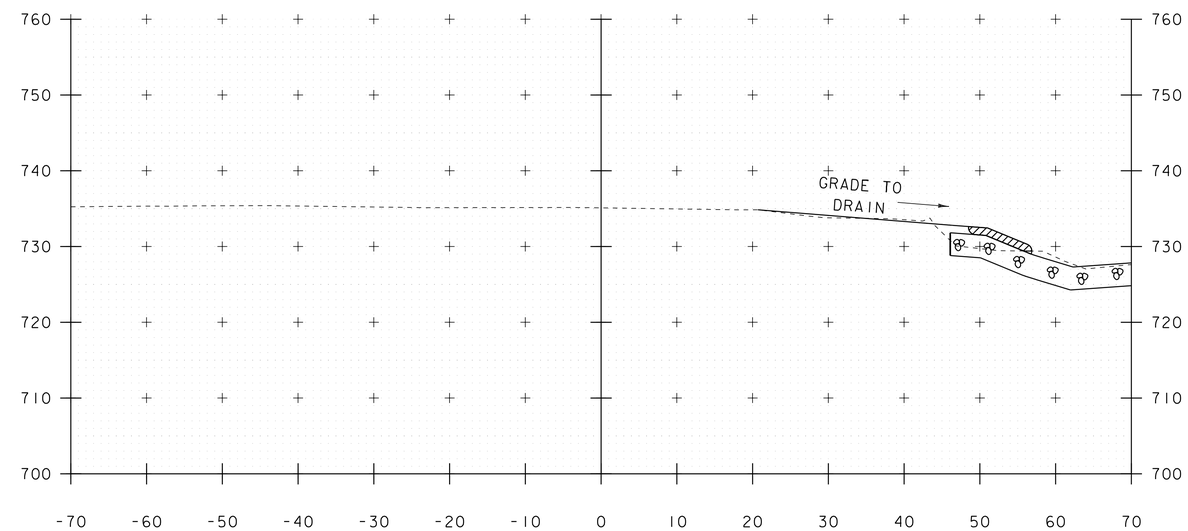

21+50

SCALE 1" = 10'-0"
10 0 10

STA. 1+00 TO STA. 1+10

PROJECT NAME: JAMAICA	
PROJECT NUMBER: ER-BRF 015-1(23)	
FILE NAME: sllb316.xs.dgn	PLOT DATE: 07-DEC-2012
PROJECT LEADER: K. HIGGINS	DRAWN BY: K. FRIEDLAND
DESIGNED BY: G. LAROCHE	CHECKED BY: G. LAROCHE
FIRE DRIVE SECTIONS 2	SHEET 65 OF 82

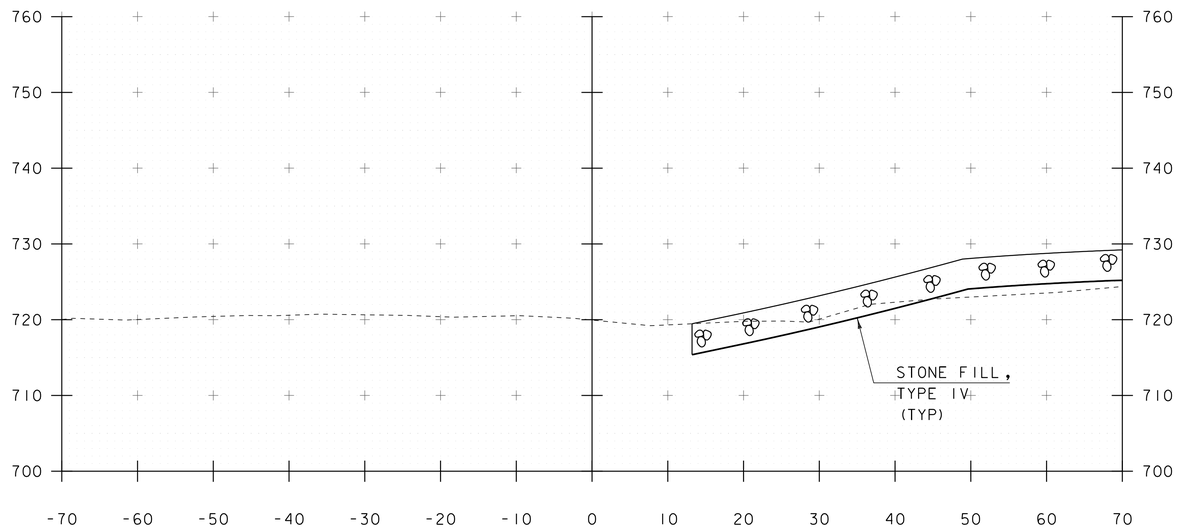

50+25

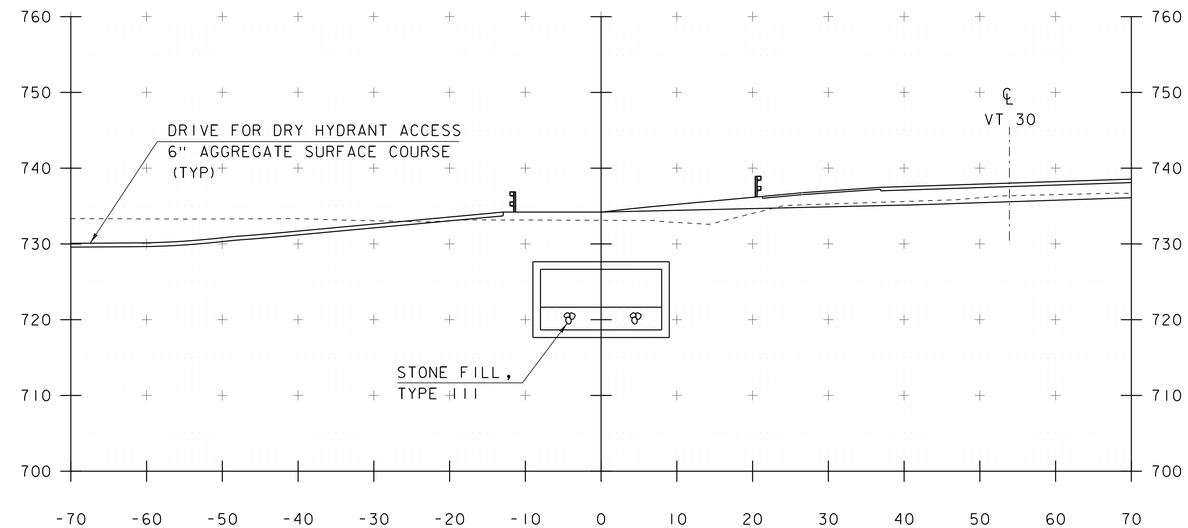

50+75

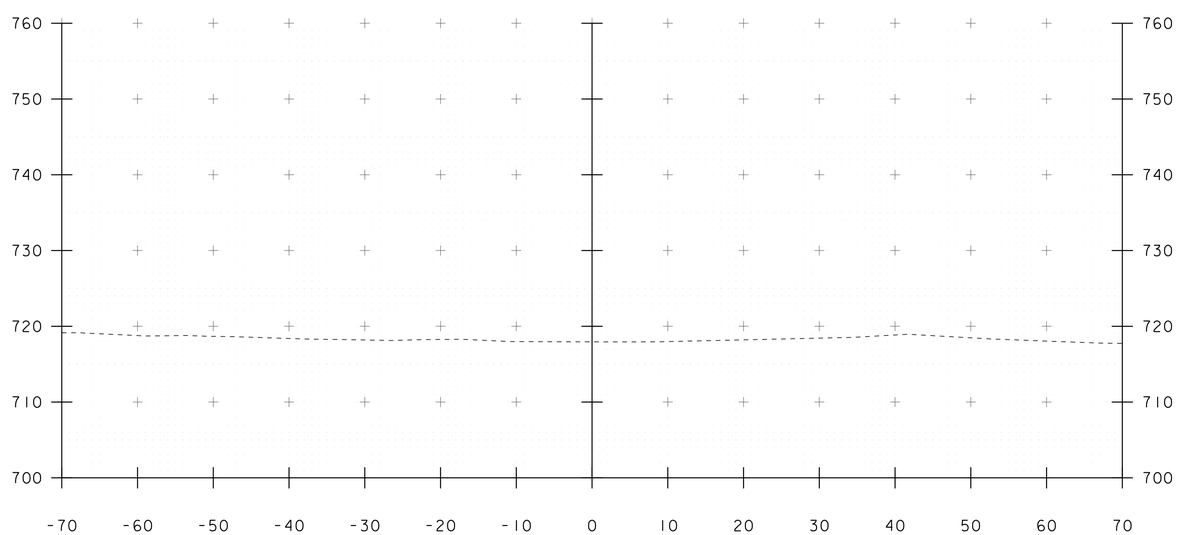

50+00

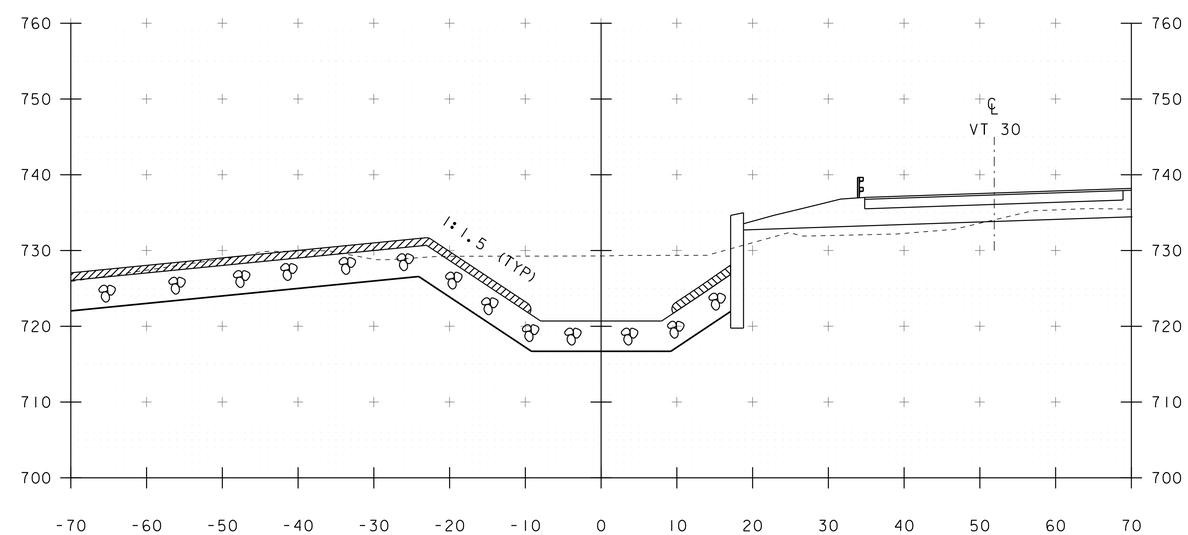

50+50

SCALE 1" = 10'-0"
10 0 10

STA. 50+00 TO STA. 50+75

PROJECT NAME: JAMAICA	
PROJECT NUMBER: ER-BRF 015-1(23)	
FILE NAME: sllb316.xs.dgn	PLOT DATE: 07-DEC-2012
PROJECT LEADER: K. HIGGINS	DRAWN BY: K. FRIEDLAND
DESIGNED BY: G. LAROCHE	CHECKED BY: G. LAROCHE
BOX CULVERT SECTIONS 1	SHEET 66 OF 82

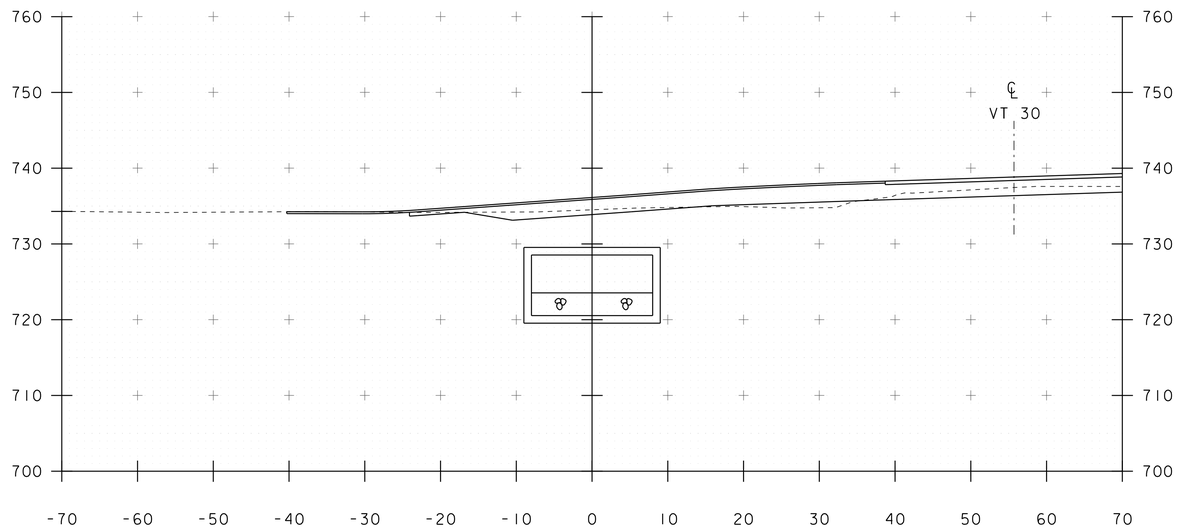

51+25

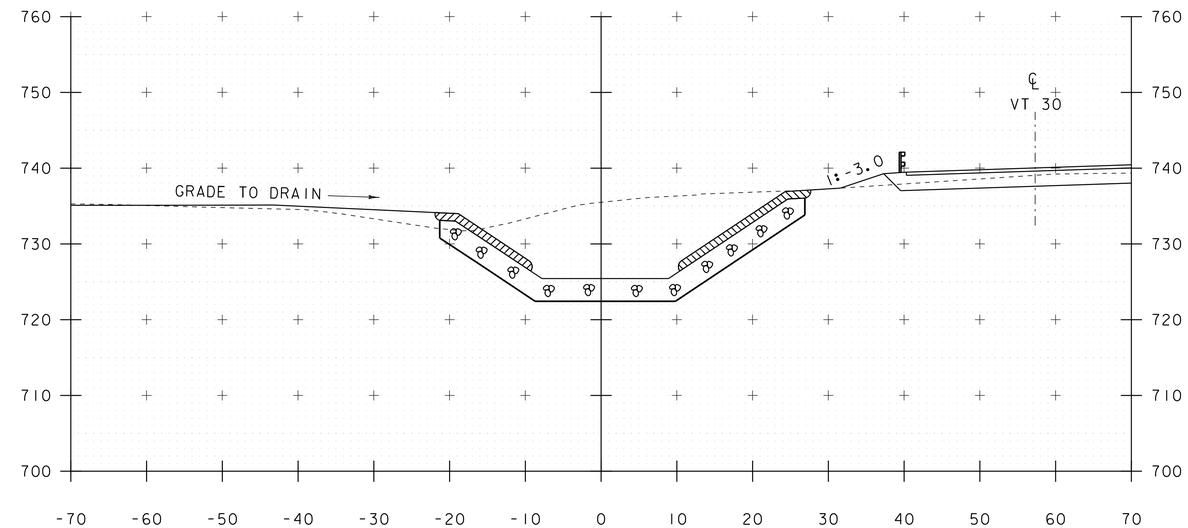

51+75

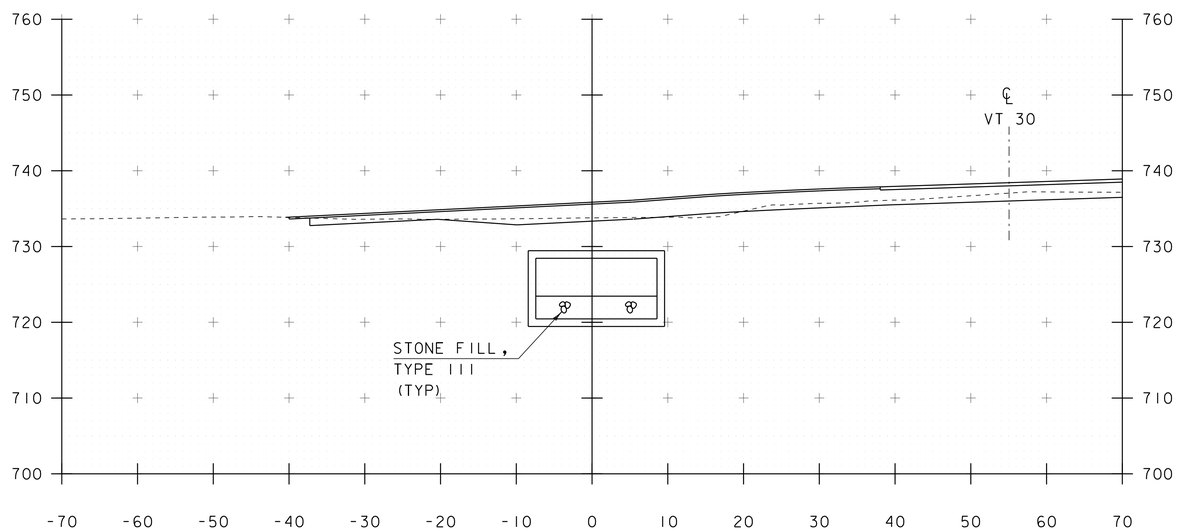

51+00

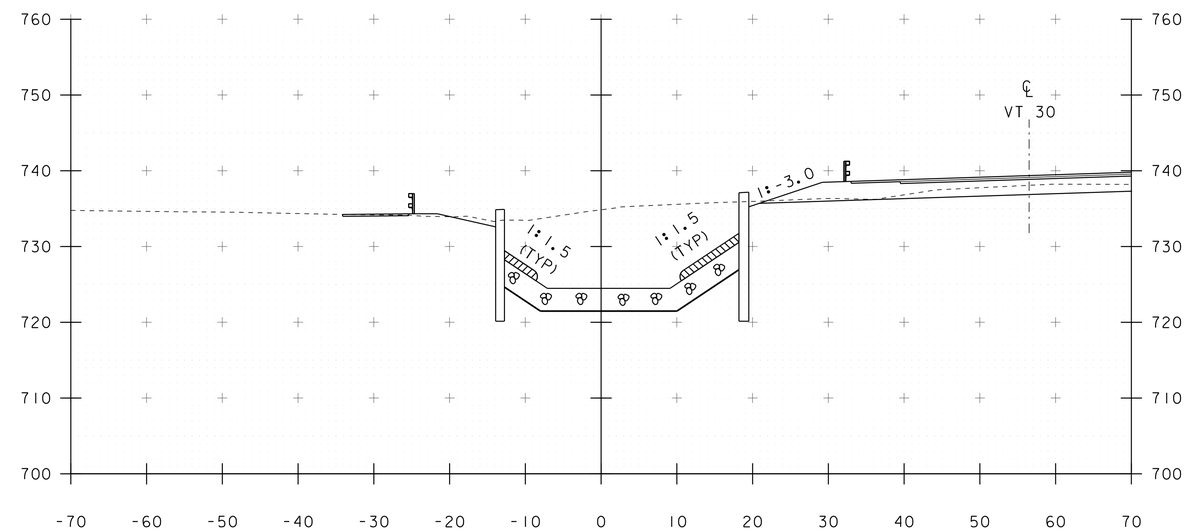

51+50

SCALE 1" = 10'-0"
10 0 10

STA. 51+00 TO STA. 51+75

PROJECT NAME: JAMAICA	
PROJECT NUMBER: ER-BRF 015-1(23)	
FILE NAME: sllb316.xs.dgn	PLOT DATE: 07-DEC-2012
PROJECT LEADER: K. HIGGINS	DRAWN BY: K. FRIEDLAND
DESIGNED BY: G. LAROCHE	CHECKED BY: G. LAROCHE
BOX CULVERT SECTIONS 2	SHEET 67 OF 82

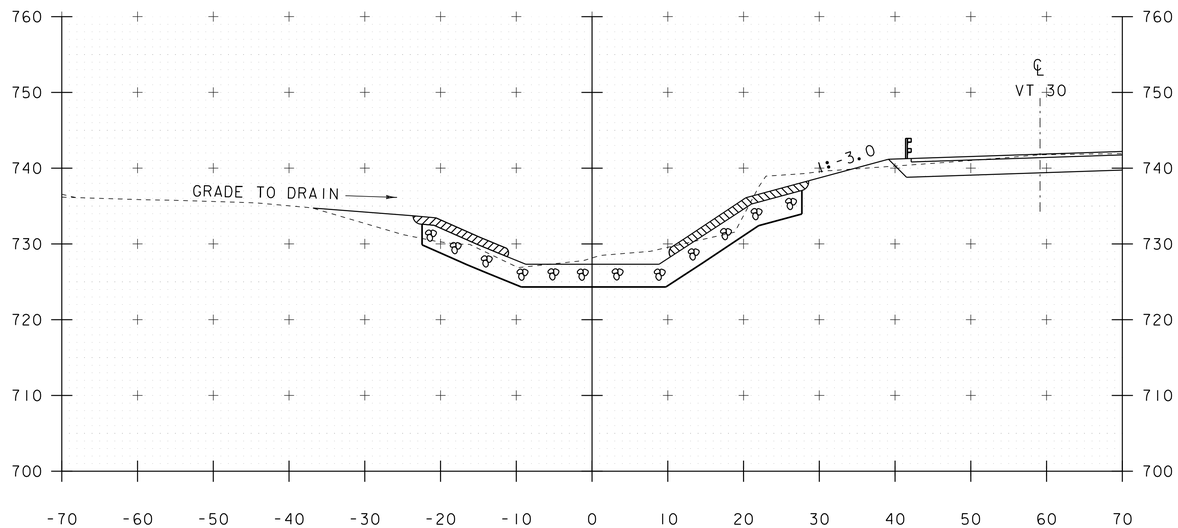

52+25

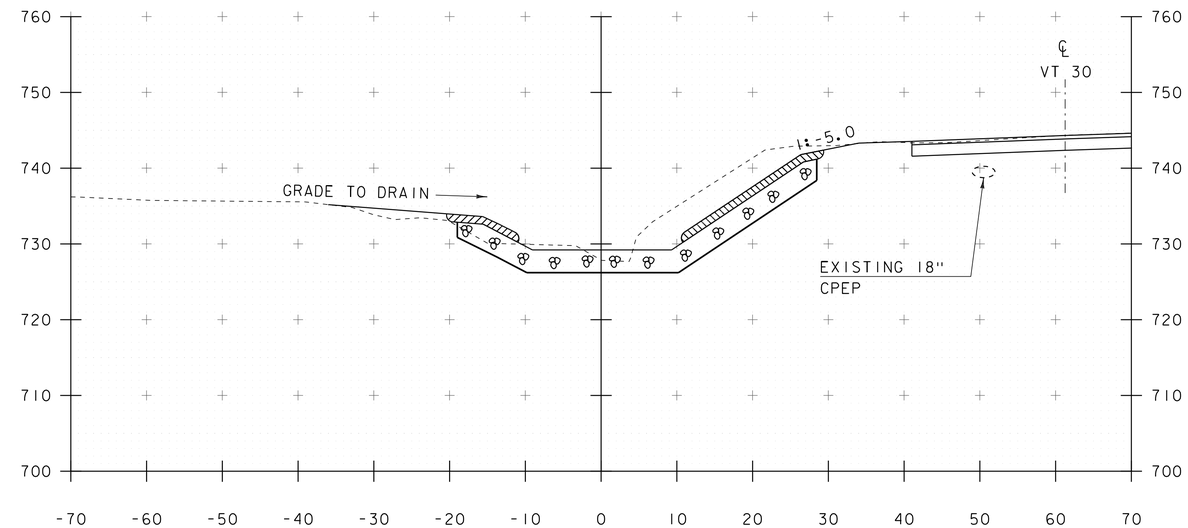

52+75

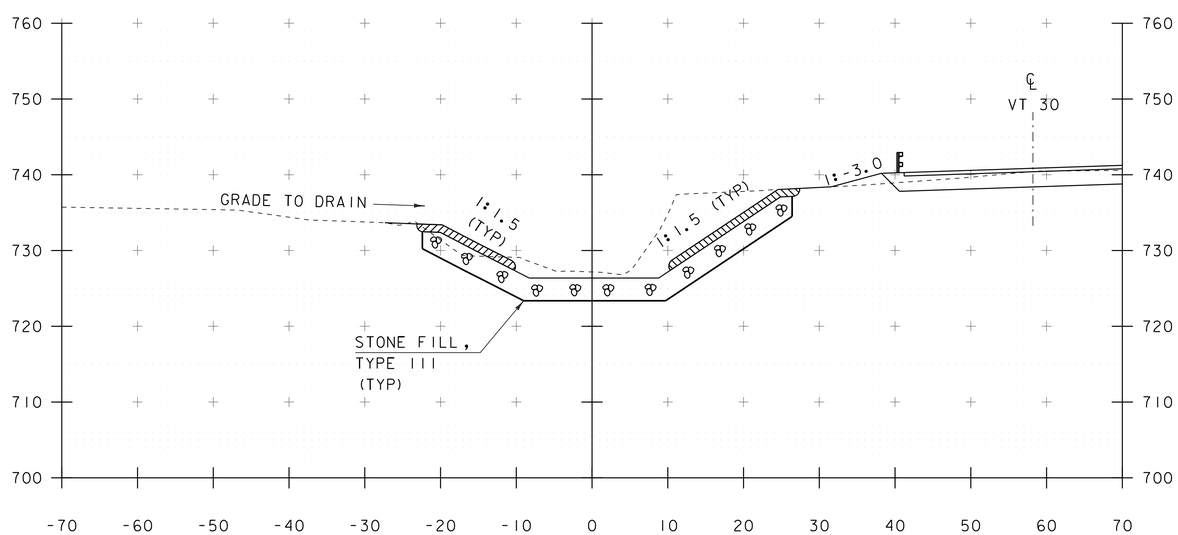

52+00

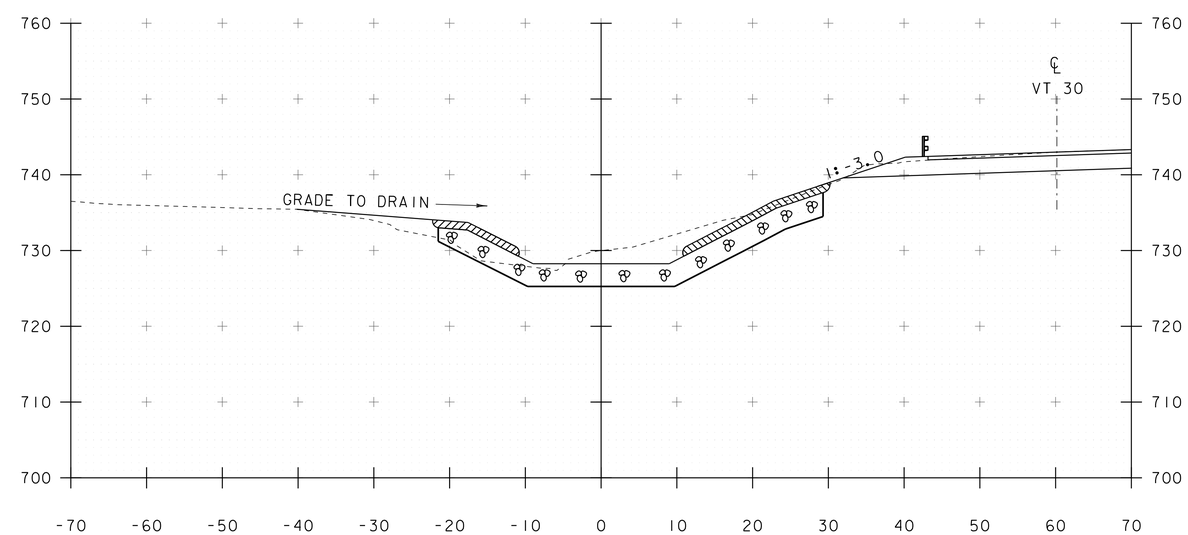

52+50

SCALE 1" = 10'-0"
10 0 10

STA. 52+00 TO STA. 52+75

PROJECT NAME: JAMAICA	
PROJECT NUMBER: ER-BRF 015-1(23)	
FILE NAME: sllb316.xs.dgn	PLOT DATE: 07-DEC-2012
PROJECT LEADER: K. HIGGINS	DRAWN BY: K. FRIEDLAND
DESIGNED BY: G. LAROCHE	CHECKED BY: G. LAROCHE
BOX CULVERT SECTIONS 3	SHEET 68 OF 82

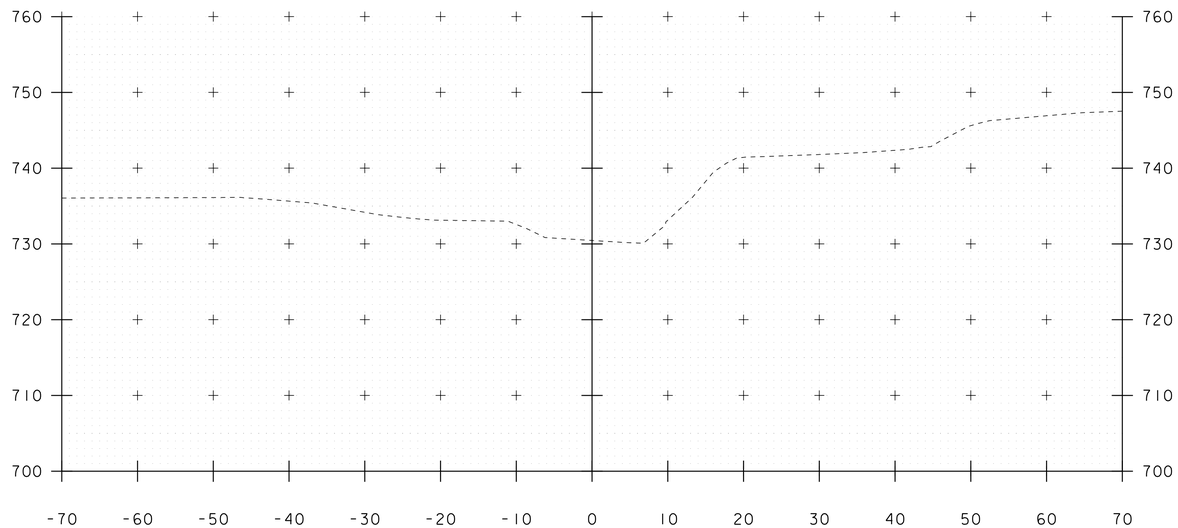

53+25

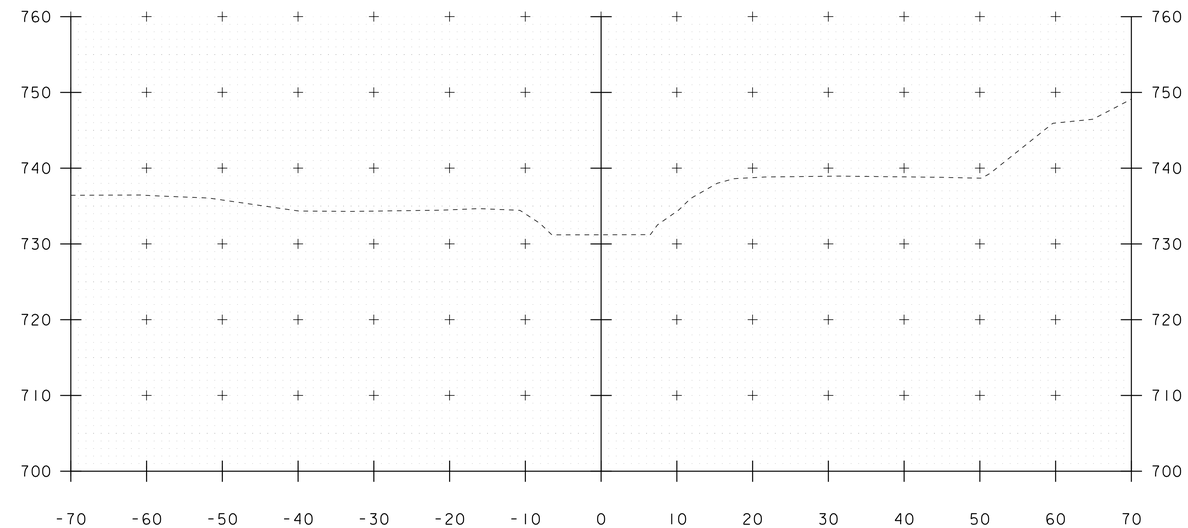

53+75

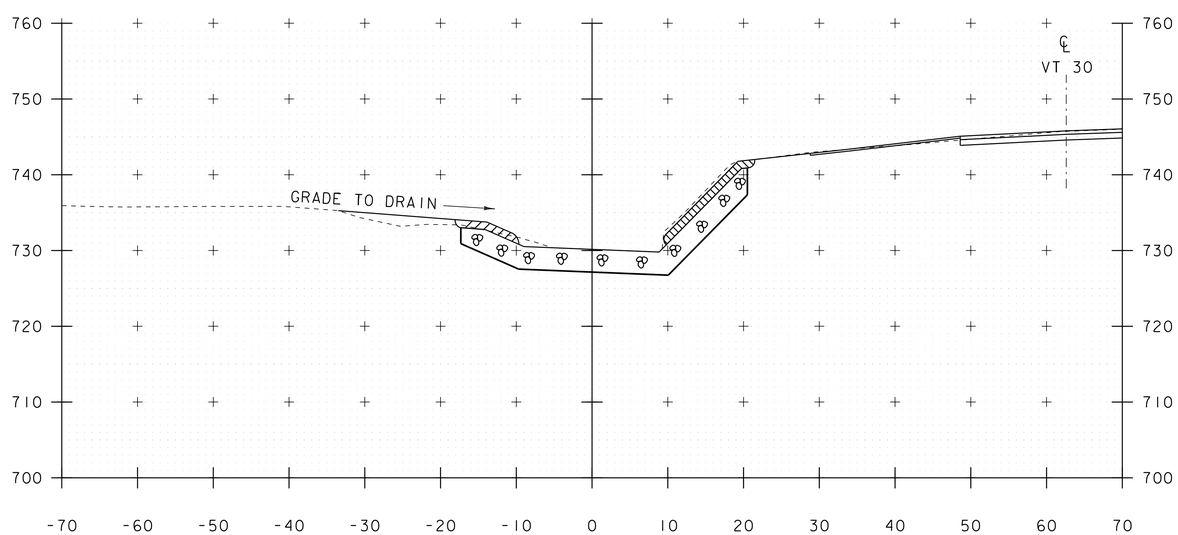

53+00

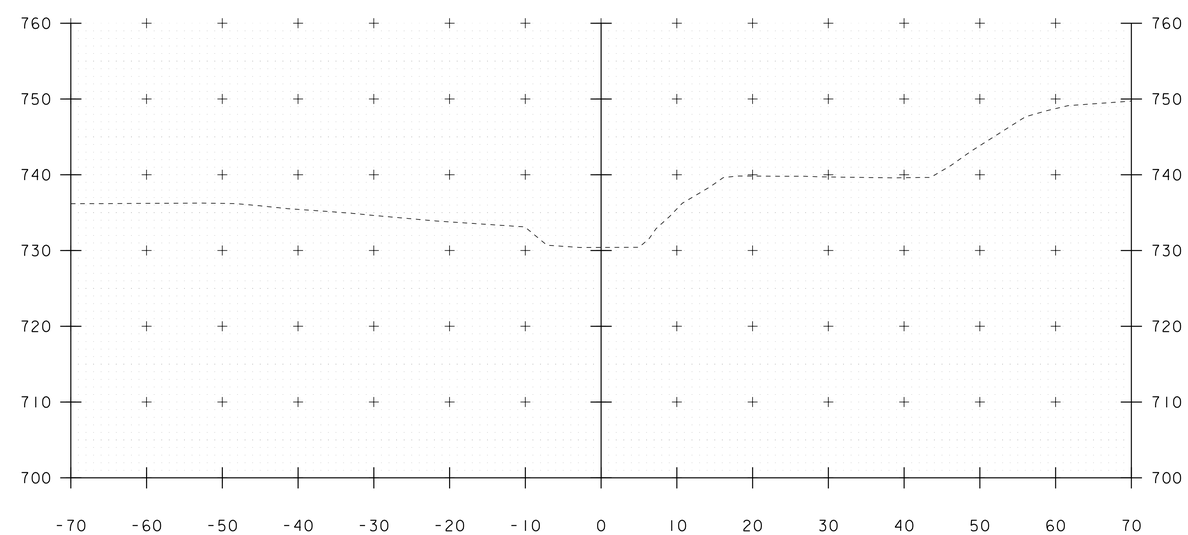

53+50

SCALE 1" = 10'-0"
10 0 10

STA. 53+00 TO STA. 53+75

PROJECT NAME: JAMAICA	
PROJECT NUMBER: ER-BRF 015-1(23)	
FILE NAME: sllb316.xs.dgn	PLOT DATE: 07-DEC-2012
PROJECT LEADER: K. HIGGINS	DRAWN BY: K. FRIEDLAND
DESIGNED BY: G. LAROCHE	CHECKED BY: G. LAROCHE
BOX CULVERT SECTIONS 4	SHEET 69 OF 82

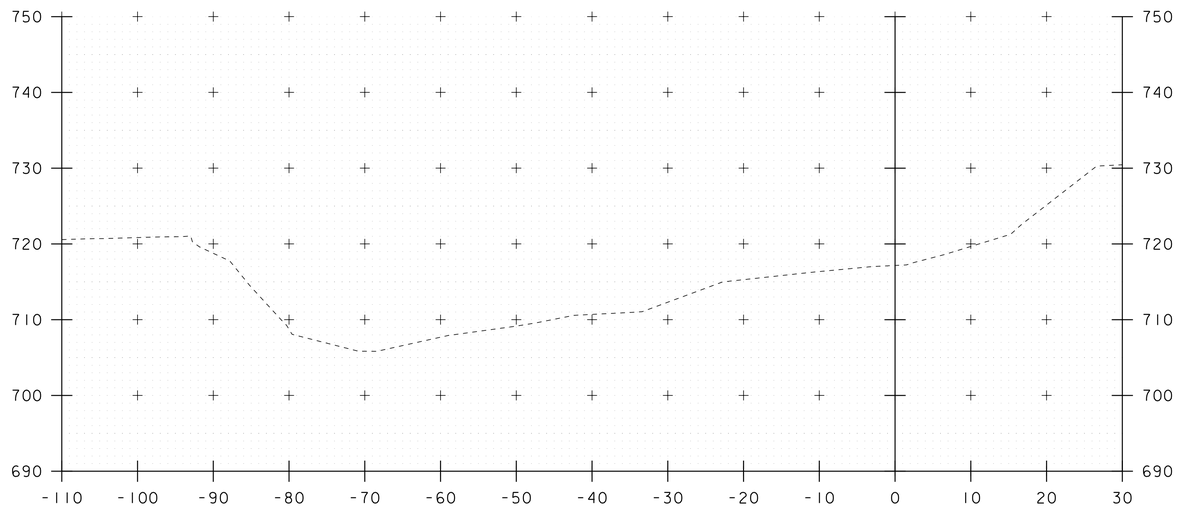

8+25

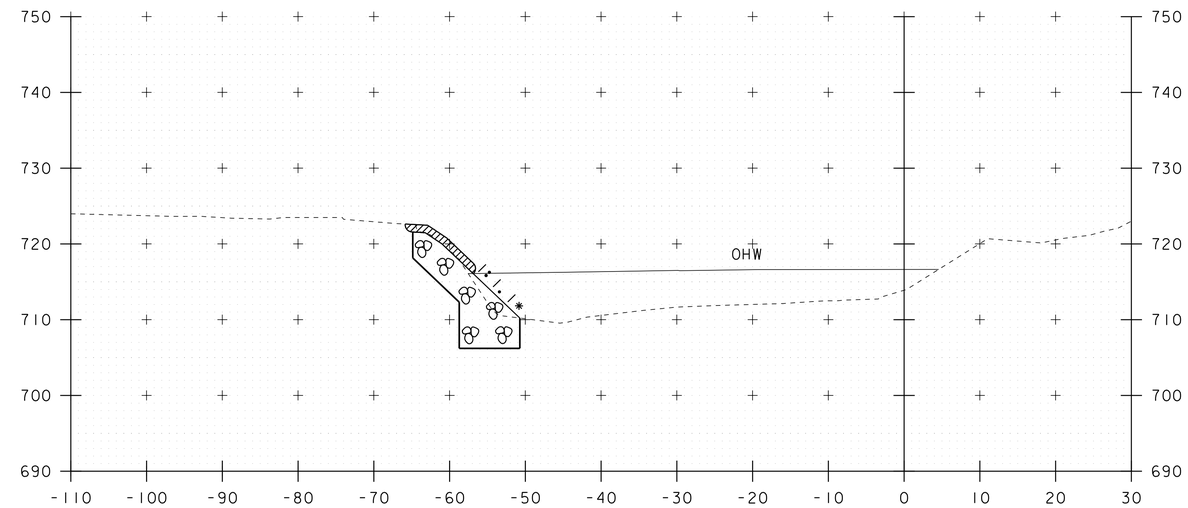

8+75

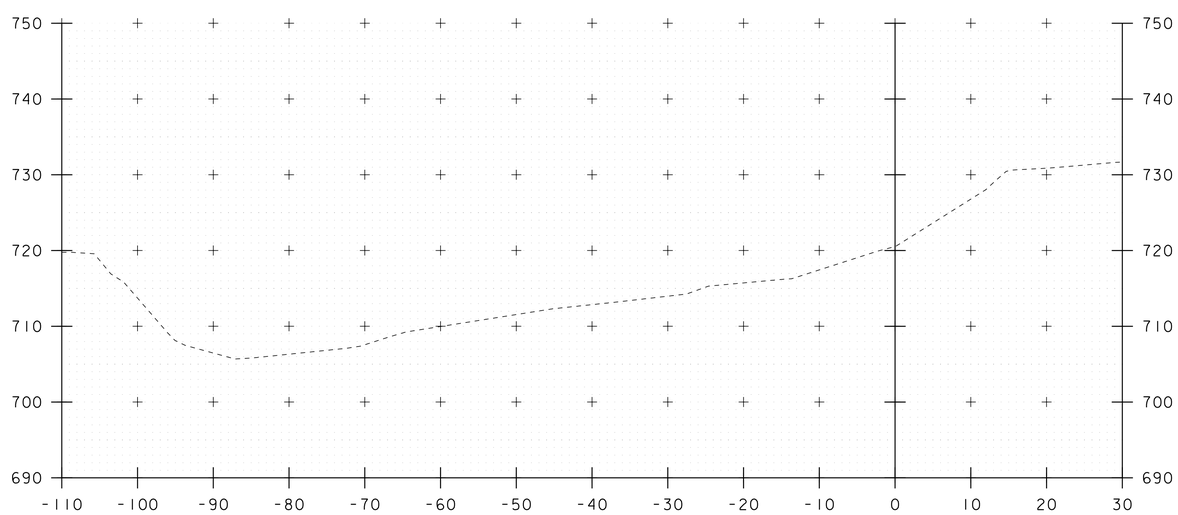

8+00

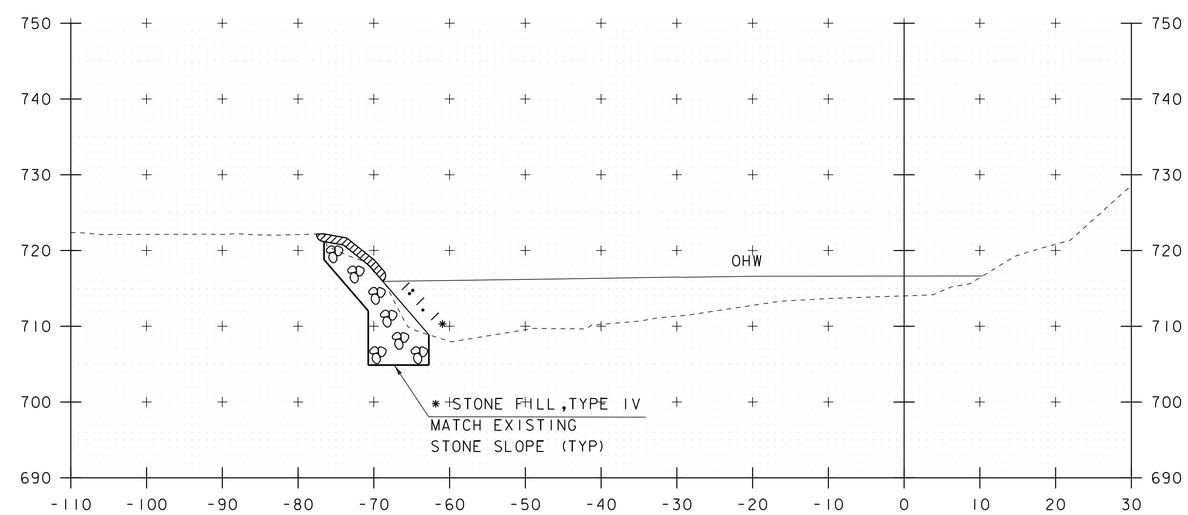

8+50

SCALE 1" = 10'-0"
10 0 10

STA 8+26.00 LT
BEGIN UNCLASSIFIED CHANNEL EXCAVATION
BEGIN GEOTEXTILE UNDER STONE FILL
BEGIN STONE FILL, TYPE IV
BEGIN GRUBBING MATERIAL

STA. 8+00 TO STA. 8+75

PROJECT NAME: JAMAICA	
PROJECT NUMBER: ER-BRF 015-1(23)	
FILE NAME: sllb316.xs.dgn	PLOT DATE: 07-DEC-2012
PROJECT LEADER: K. HIGGINS	DRAWN BY: K. FRIEDLAND
DESIGNED BY: G. LAROCHE	CHECKED BY: G. LAROCHE
CHANNEL SECTIONS 1	SHEET 70 OF 82

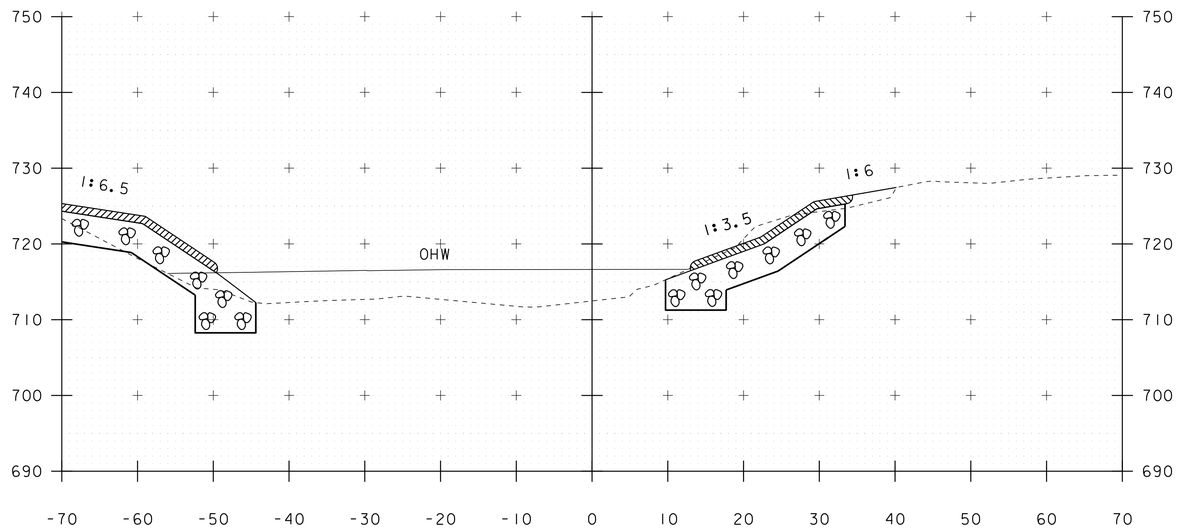

9+25

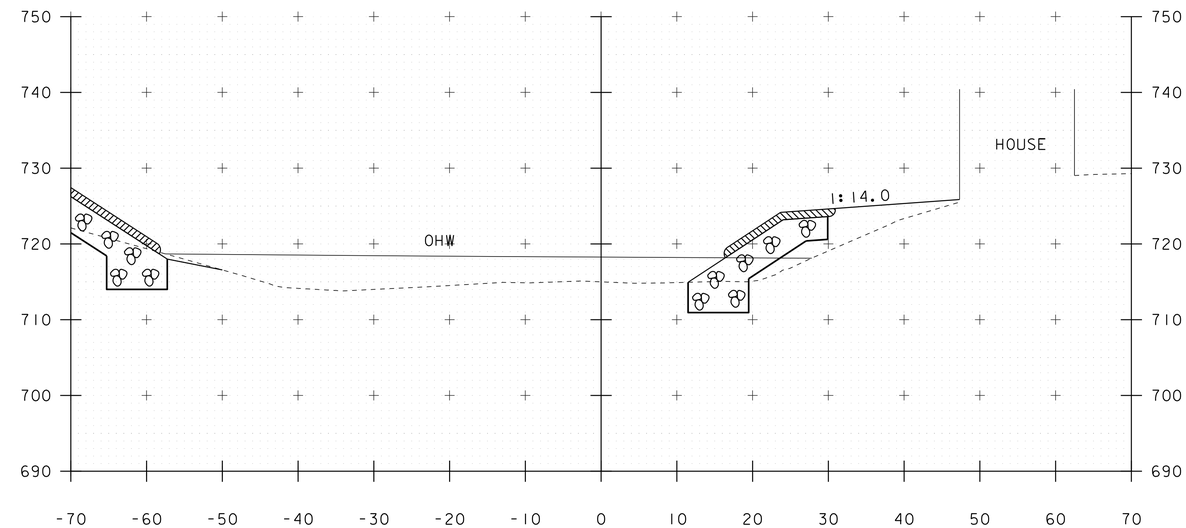

9+75

STA 9+00.00 RT
BEGIN UNCLASSIFIED CHANNEL EXCAVATION
BEGIN GEOTEXTILE UNDER STONE FILL
BEGIN STONE FILL, TYPE IV
BEGIN GRUBBING MATERIAL

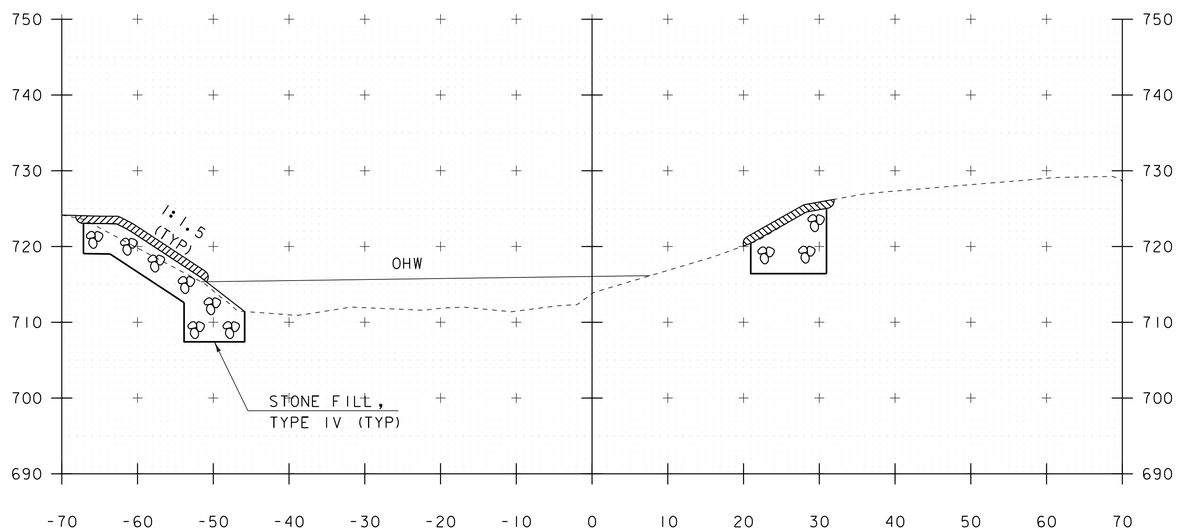

9+00

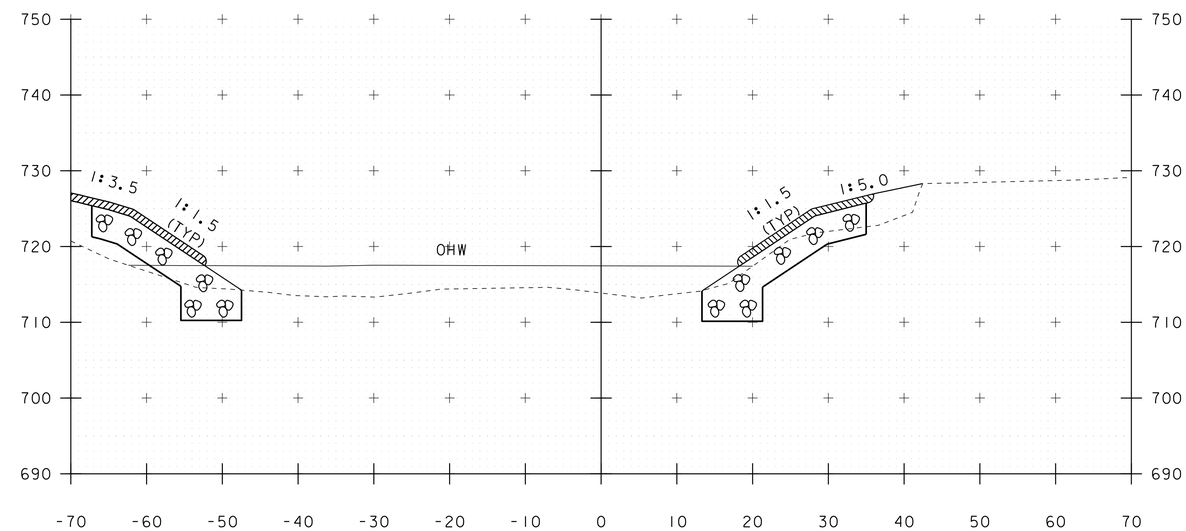

9+50

SCALE 1" = 10'-0"
10 0 10

STA. 9+00 TO STA. 9+75

PROJECT NAME: JAMAICA	
PROJECT NUMBER: ER-BRF 015-1(23)	
FILE NAME: sllb316.xs.dgn	PLOT DATE: 07-DEC-2012
PROJECT LEADER: K. HIGGINS	DRAWN BY: K. FRIEDLAND
DESIGNED BY: G. LAROCHE	CHECKED BY: G. LAROCHE
CHANNEL SECTIONS 2	SHEET 71 OF 82

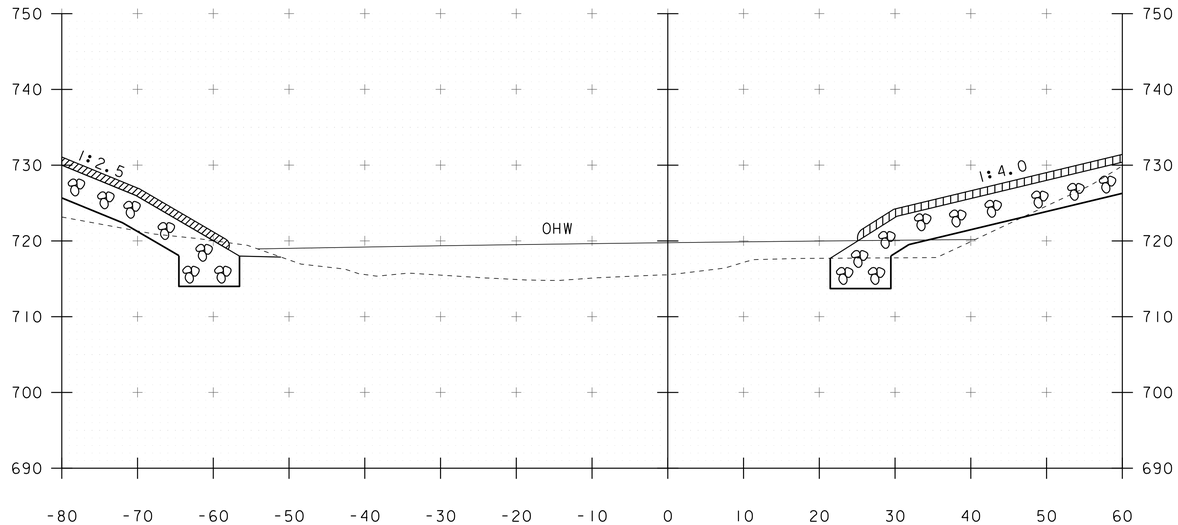

10+25

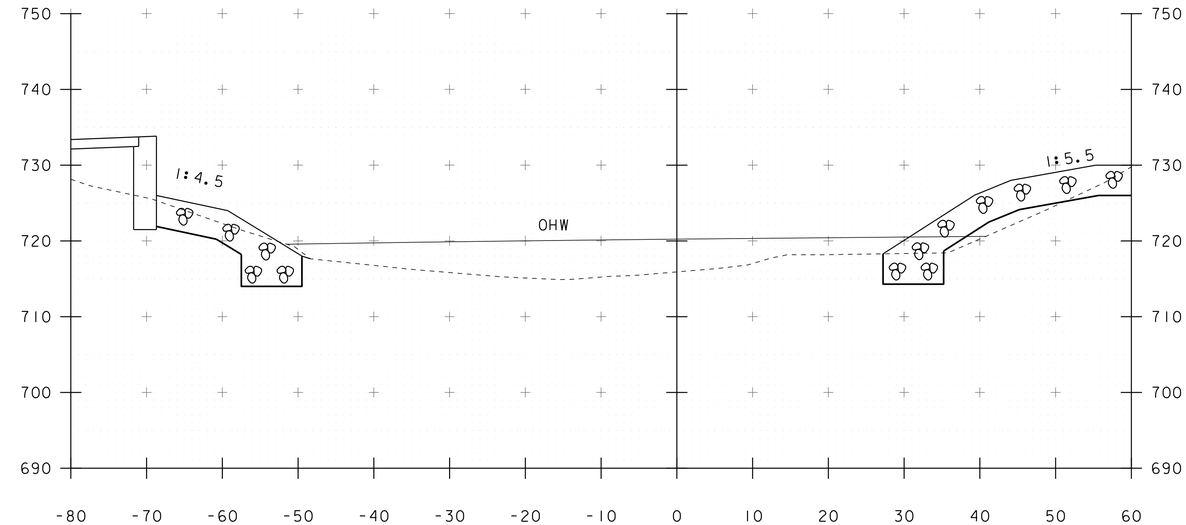

10+40

STA 10+31.50 LT
END GRUBBING MATERIAL

STA 10+30.00 RT
END GRUBBING MATERIAL

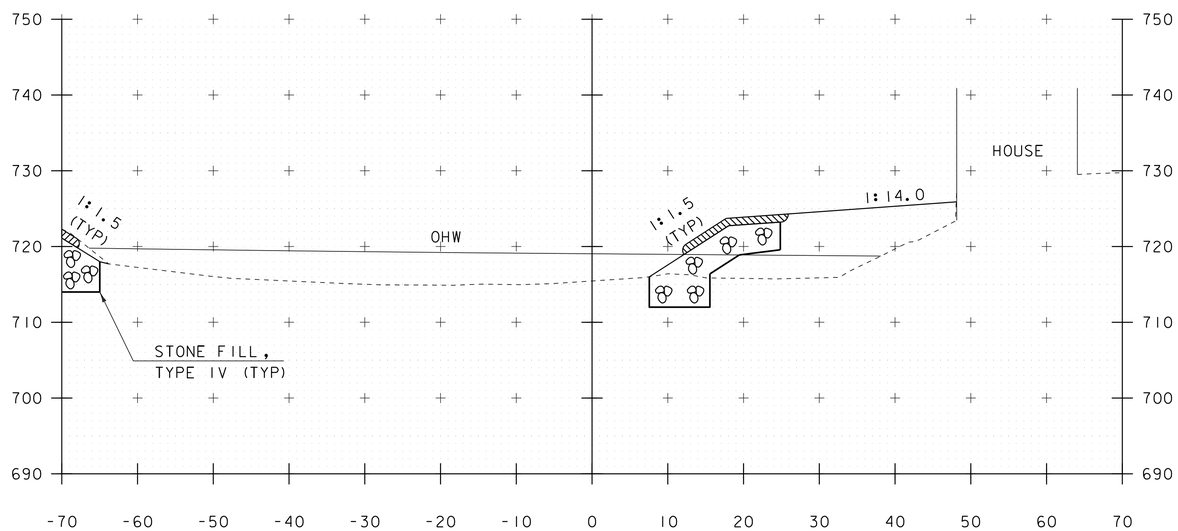

10+00

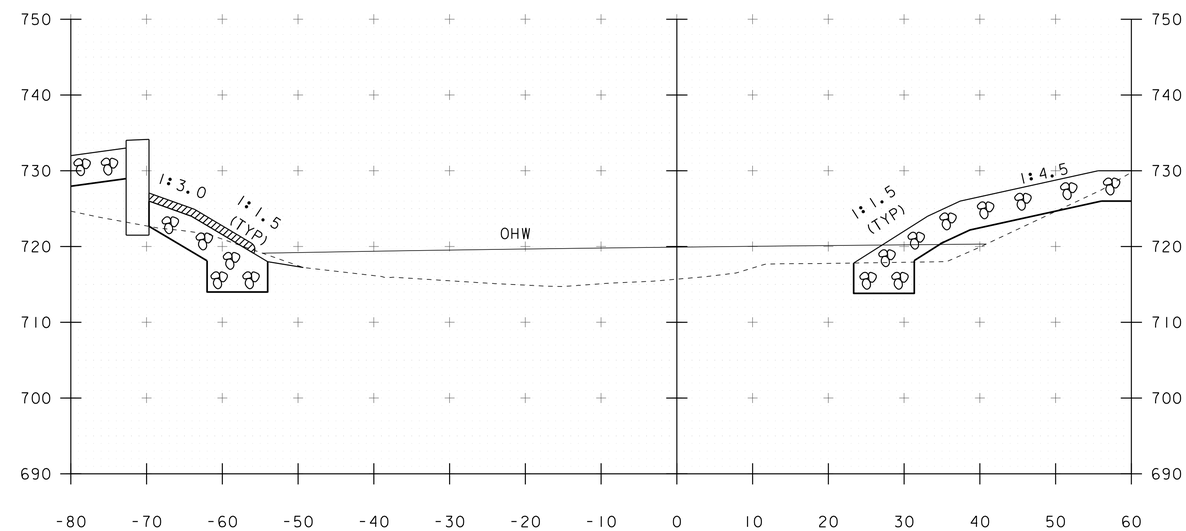

10+30

SCALE 1" = 10'-0"
10 0 10

STA. 10+00 TO STA. 10+40

PROJECT NAME: JAMAICA	
PROJECT NUMBER: ER-BRF 015-1(23)	
FILE NAME: sllb316.xs.dgn	PLOT DATE: 07-DEC-2012
PROJECT LEADER: K. HIGGINS	DRAWN BY: K. FRIEDLAND
DESIGNED BY: G. LAROCHE	CHECKED BY: G. LAROCHE
CHANNEL SECTIONS 3	SHEET 72 OF 82

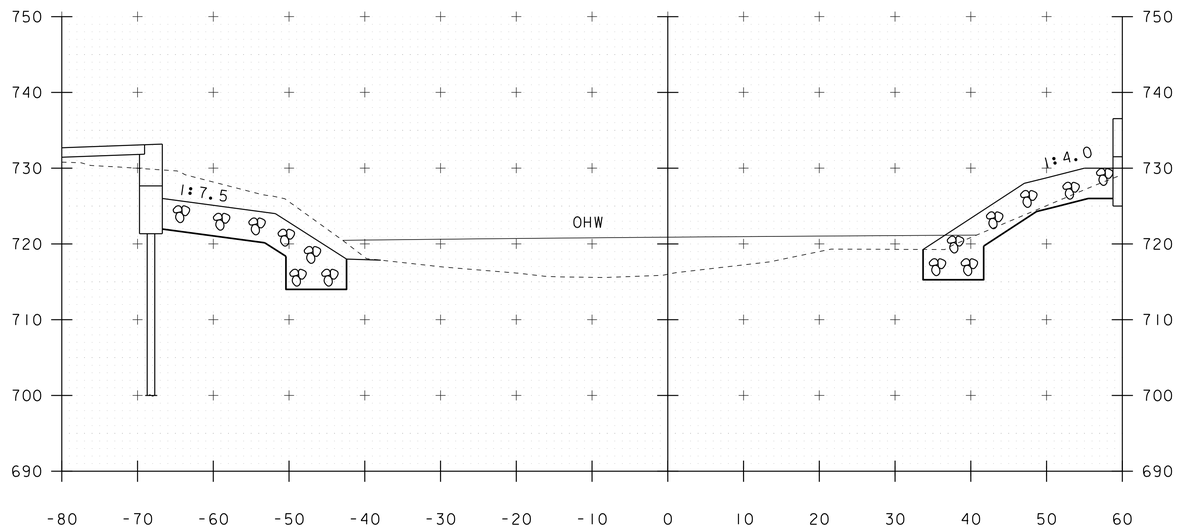

10+60

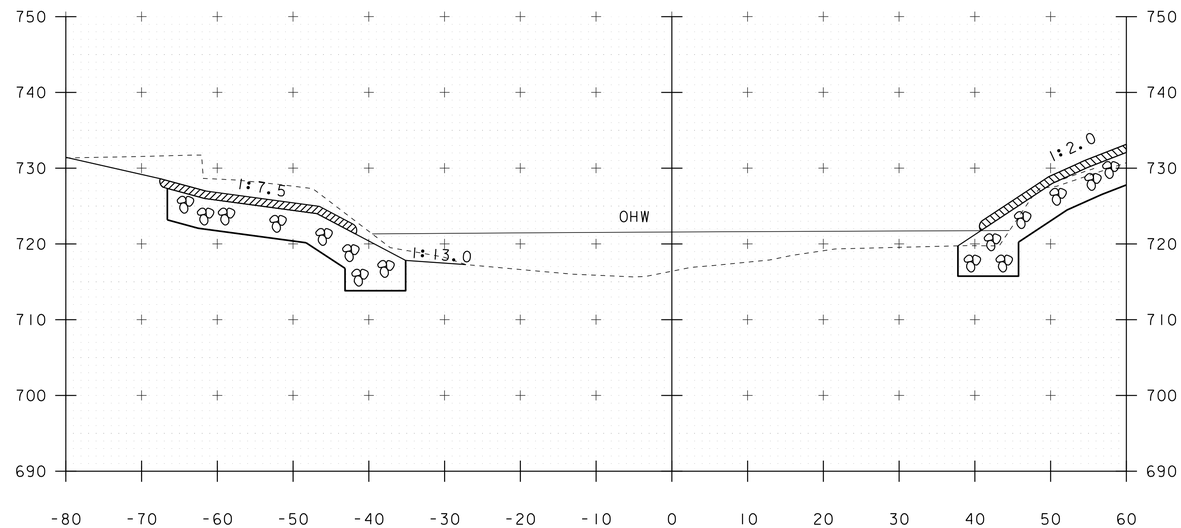

10+80

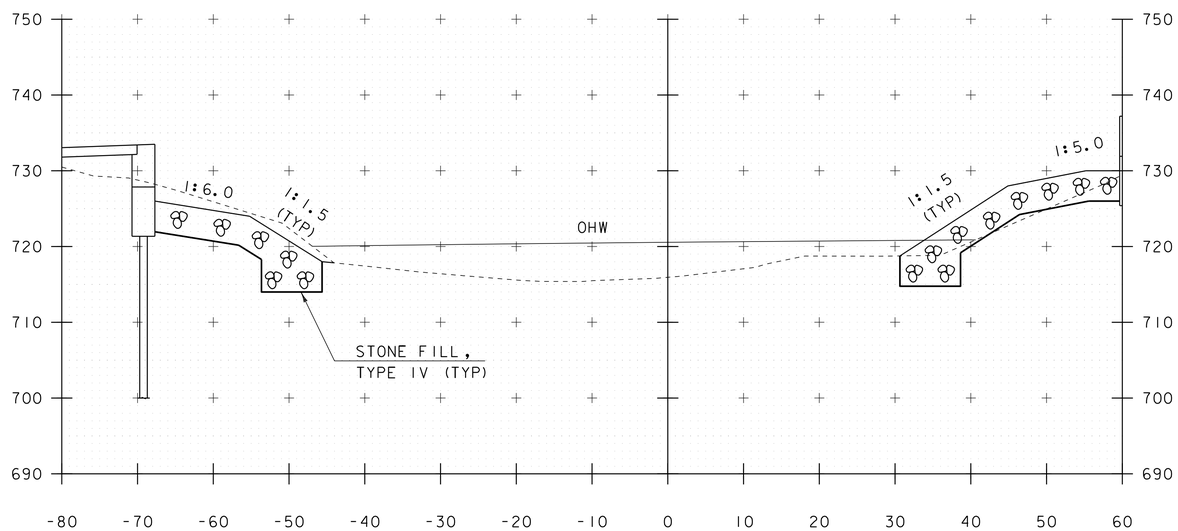

10+50

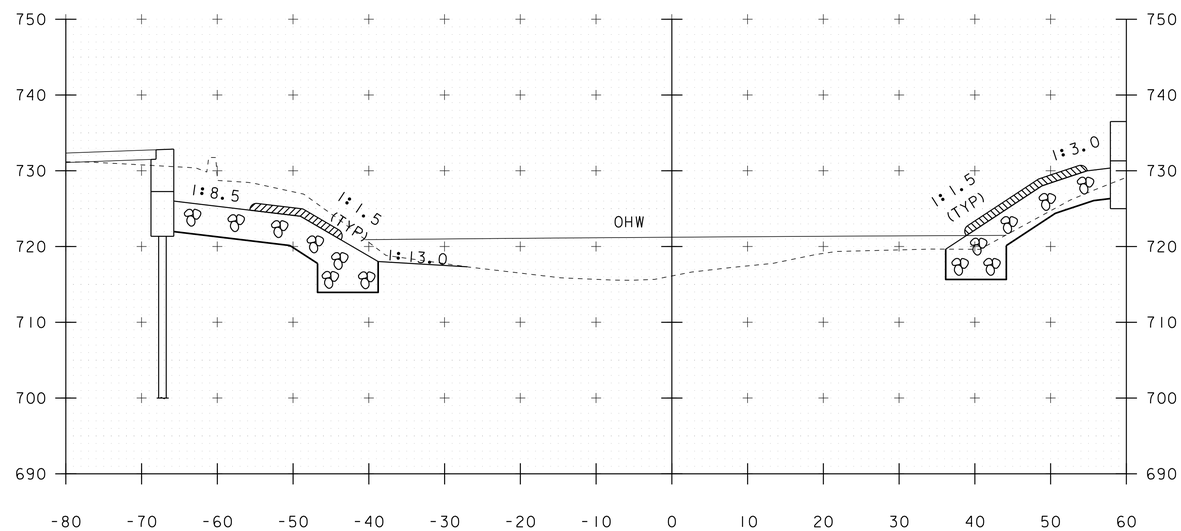

STA 10+69.00 LT
BEGIN GRUBBING MATERIAL

10+70

STA 10+69.00 RT
BEGIN GRUBBING MATERIAL

SCALE 1" = 10'-0"
10 0 10

STA. 10+50 TO STA. 10+80

PROJECT NAME: JAMAICA	
PROJECT NUMBER: ER-BRF 015-1(23)	
FILE NAME: sllb316.xs.dgn	PLOT DATE: 07-DEC-2012
PROJECT LEADER: K. HIGGINS	DRAWN BY: K. FRIEDLAND
DESIGNED BY: G. LAROCHE	CHECKED BY: G. LAROCHE
CHANNEL SECTIONS 4	SHEET 73 OF 82

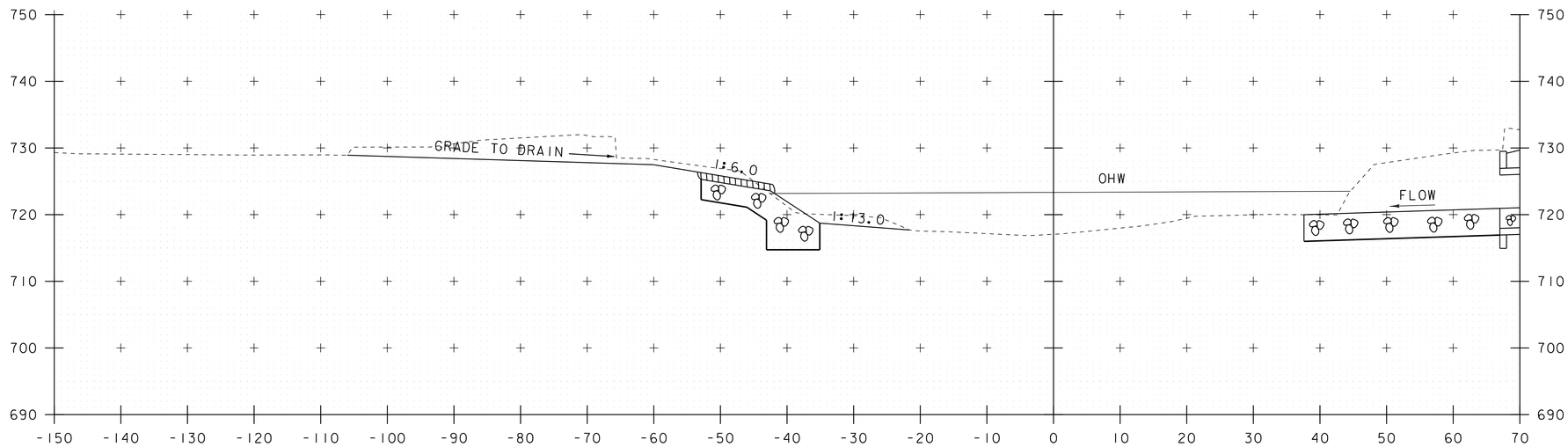

11+00

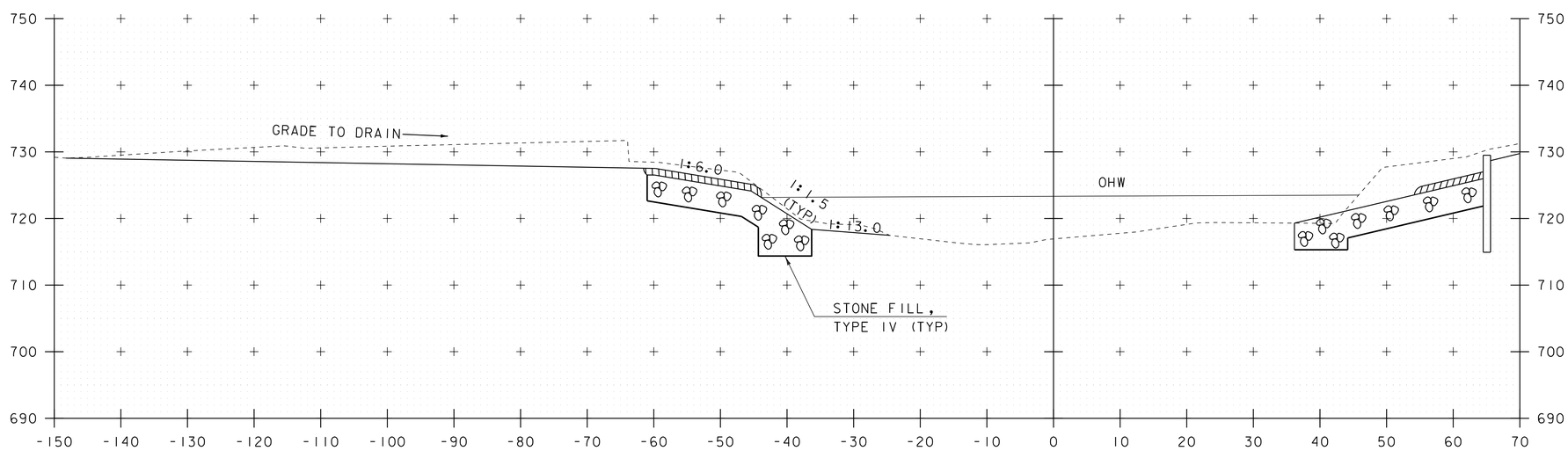

10+90

SCALE 1" = 10'-0"
10 0 10

STA. 10+90 TO STA. 11+00

PROJECT NAME: JAMAICA	
PROJECT NUMBER: ER-BRF 015-1(23)	
FILE NAME: sllb316.xs.dgn	PLOT DATE: 07-DEC-2012
PROJECT LEADER: K. HIGGINS	DRAWN BY: K. FRIEDLAND
DESIGNED BY: G. LAROCHE	CHECKED BY: G. LAROCHE
CHANNEL SECTIONS 5	SHEET 74 OF 82

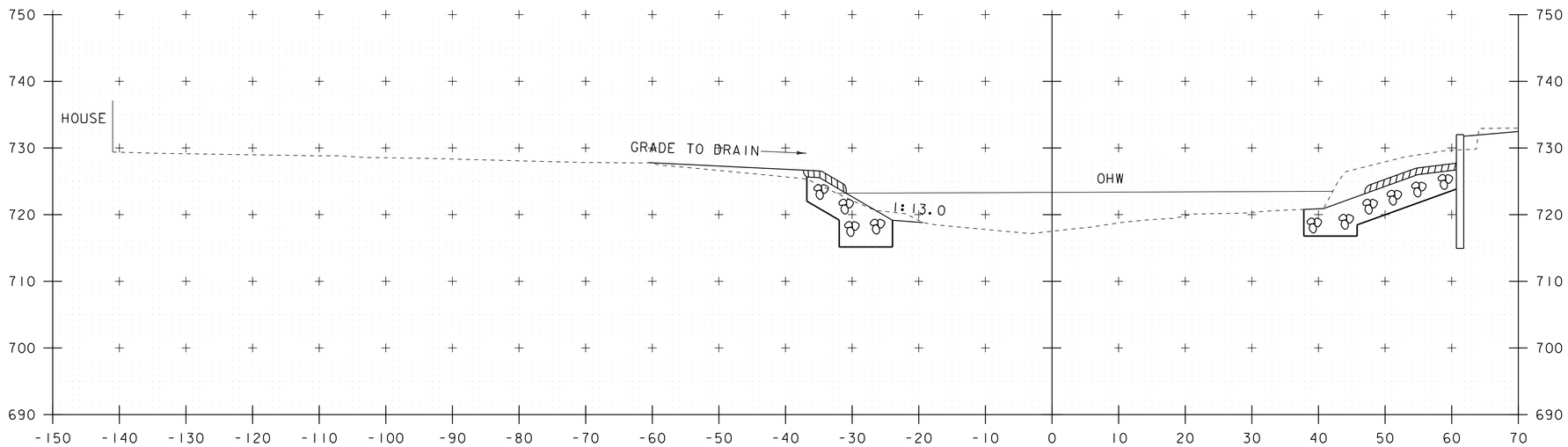

11+20

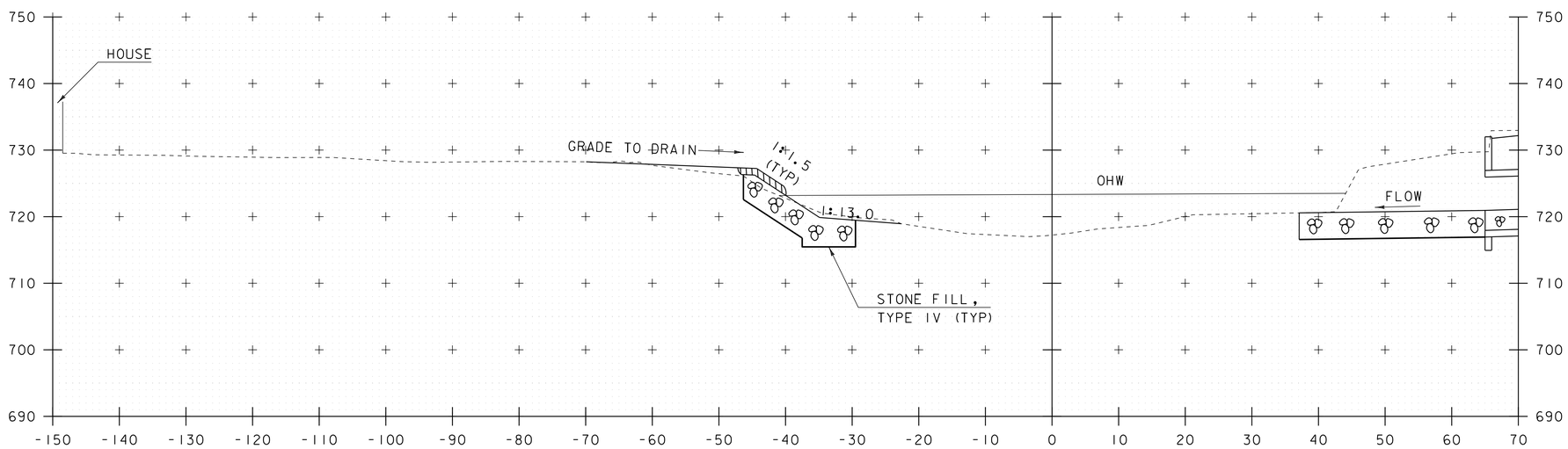

11+10

SCALE 1" = 10'-0"
10 0 10

STA. 11+10 TO STA. 11+20

PROJECT NAME: JAMAICA	
PROJECT NUMBER: ER-BRF 015-1(23)	
FILE NAME: sllb316.xs.dgn	PLOT DATE: 07-DEC-2012
PROJECT LEADER: K. HIGGINS	DRAWN BY: K. FRIEDLAND
DESIGNED BY: G. LAROCHE	CHECKED BY: G. LAROCHE
CHANNEL SECTIONS 6	SHEET 75 OF 82

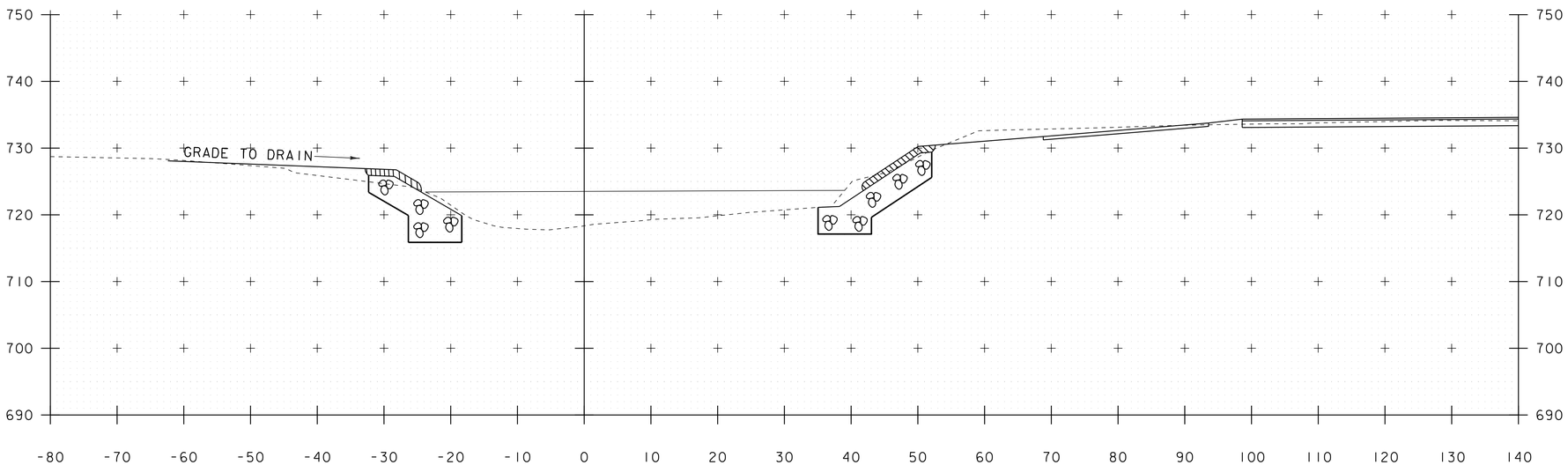

11+40

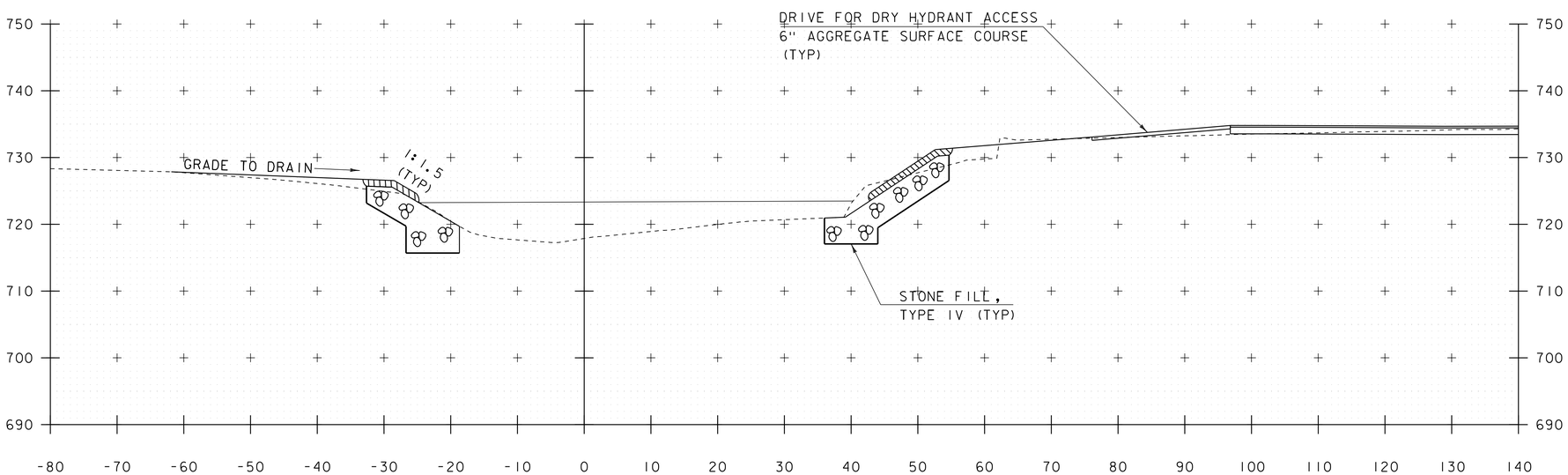

11+30

SCALE 1" = 10'-0"
10 0 10

STA. 11+30 TO STA. 11+40

PROJECT NAME: JAMAICA	
PROJECT NUMBER: ER-BRF 015-1(23)	
FILE NAME: sllb316.xs.dgn	PLOT DATE: 07-DEC-2012
PROJECT LEADER: K. HIGGINS	DRAWN BY: K. FRIEDLAND
DESIGNED BY: G. LAROCHE	CHECKED BY: G. LAROCHE
CHANNEL SECTIONS 7	SHEET 76 OF 82

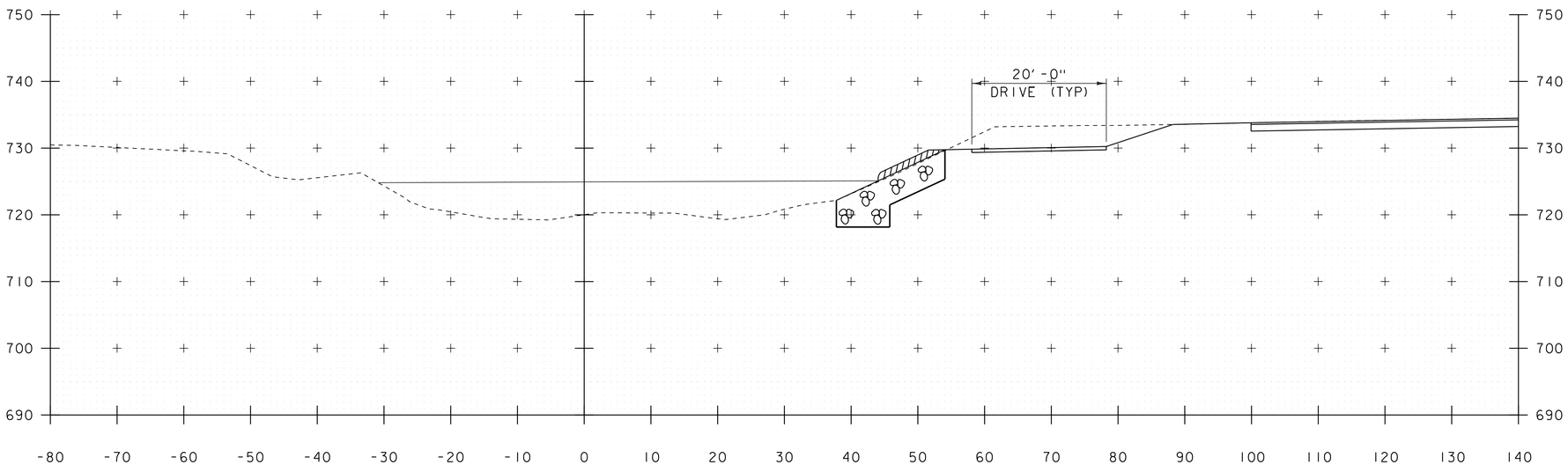

11+75

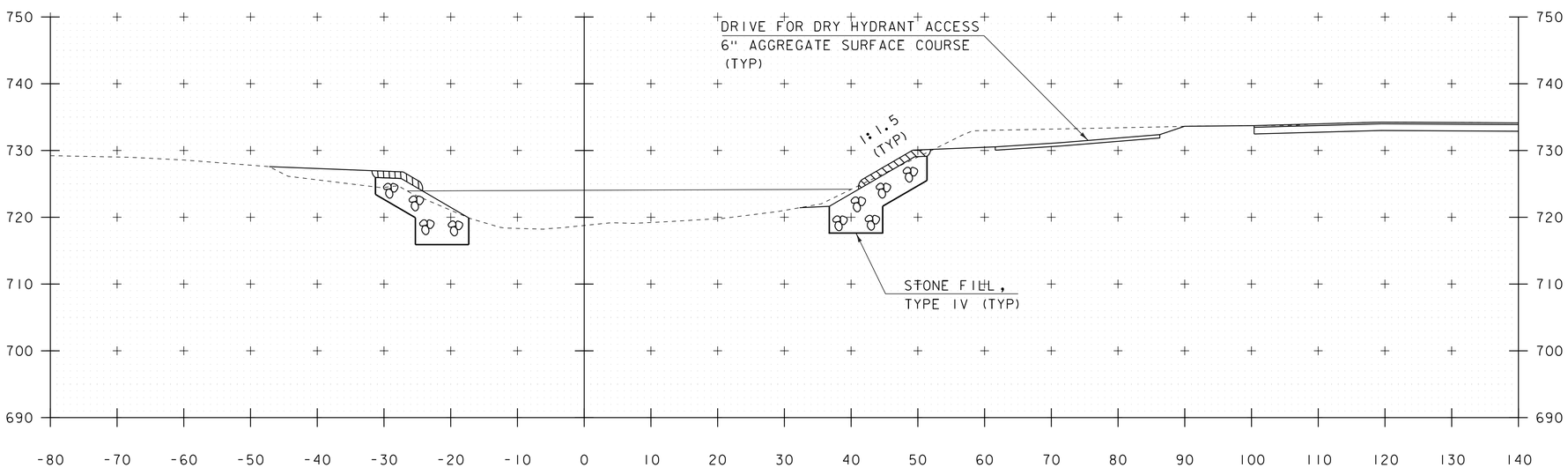

11+50

STA 11+55.00 LT
END UNCLASSIFIED CHANNEL EXCAVATION
END GEOTEXTILE UNDER STONE FILL
END STONE FILL, TYPE IV
END GRUBBING MATERIAL

SCALE 1" = 10'-0"
10 0 10

STA. 11+50 TO STA. 11+75

PROJECT NAME: JAMAICA	
PROJECT NUMBER: ER-BRF 015-1(23)	
FILE NAME: sllb316.xs.dgn	PLOT DATE: 07-DEC-2012
PROJECT LEADER: K. HIGGINS	DRAWN BY: K. FRIEDLAND
DESIGNED BY: G. LAROCHE	CHECKED BY: G. LAROCHE
CHANNEL SECTIONS 8	SHEET 77 OF 82

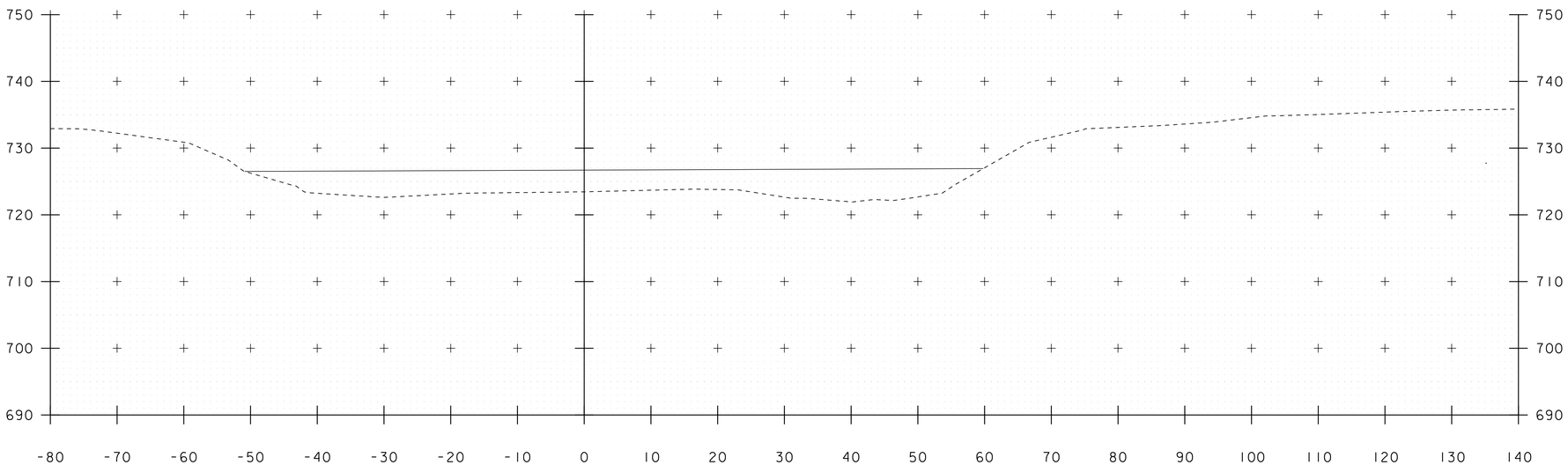

12+25

STA 12+25.00 RT
END UNCLASSIFIED CHANNEL EXCAVATION
END GEOTEXTILE UNDER STONE FILL
END STONE FILL, TYPE IV
END GRUBBING MATERIAL

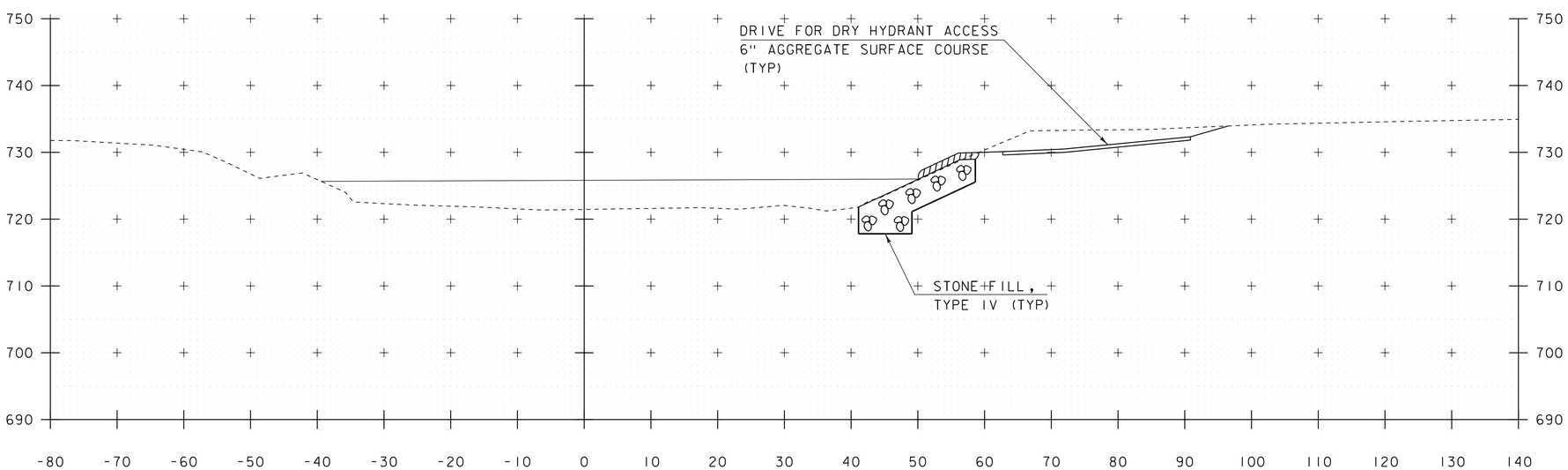

12+00

SCALE 1" = 10'-0"
10 0 10

STA. 12+00 TO STA. 12+25

PROJECT NAME: JAMAICA	
PROJECT NUMBER: ER-BRF 015-1(23)	
FILE NAME: sllb316.xs.dgn	PLOT DATE: 07-DEC-2012
PROJECT LEADER: K. HIGGINS	DRAWN BY: K. FRIEDLAND
DESIGNED BY: G. LAROCHE	CHECKED BY: G. LAROCHE
CHANNEL SECTIONS 9	SHEET 78 OF 82

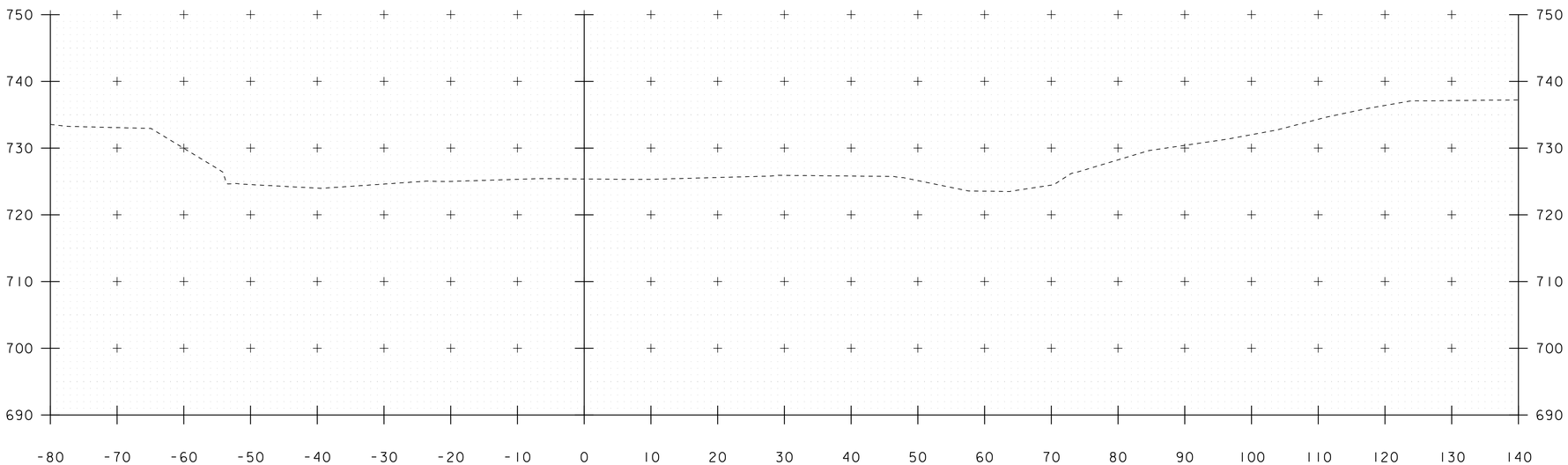

12+75

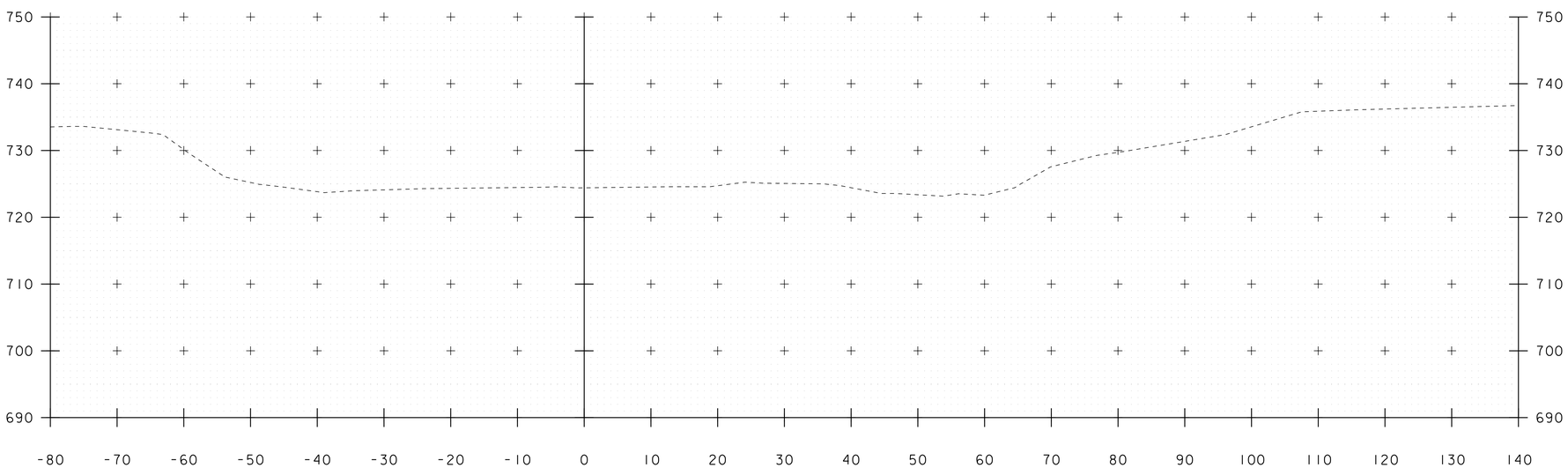

12+50

SCALE 1" = 10'-0"
10 0 10

STA. 12+50 TO STA. 12+75

PROJECT NAME: JAMAICA	
PROJECT NUMBER: ER-BRF 015-1(23)	
FILE NAME: sllb316.xs.dgn	PLOT DATE: 07-DEC-2012
PROJECT LEADER: K. HIGGINS	DRAWN BY: K. FRIEDLAND
DESIGNED BY: G. LAROCHE	CHECKED BY: G. LAROCHE
CHANNEL SECTIONS 10	SHEET 79 OF 82

STATE OF VERMONT
AGENCY OF TRANSPORTATION

RIGHT - OF - WAY DETAIL SHEET

TABLE OF PROPERTY ACQUISITION

PARCEL NO.	PROPERTY OWNER	SHEET NO.	BEGINNING STATION	ENDING STATION	TAKE AREA±	REMAINDER AREA±	RIGHT TYPE	(T)/(P)	AREA ±	RECORDING DATA TITLE	DATE	TOWN / CITY	BOOK	PAGE	REMARKS
1	BECKWITH, JOEL & ELAINE C.	3	208+96 LT	211+04 LT			UTILITY	(T)	0.11 A	GTR	09/17/12	JAMAICA	113	347-350	4,640 SF±, VALUE AS ER
			209+38 LT	211+03.03 LT			DETOUR	(T)	0.12 A						INCL. TEMP BRIDGE, CONCRETE WALL
															AND CHANNEL REPAIR WORK; 5,020 SF±,
															VALUE AS ER
			209+38 LT	210+86 LT			INSTALL	(T)	1,180 SF						BF & EC
			209+42 LT	210+64 LT			SLOPE	(T)	2,900 SF						INCL. EC
			209+53 LT												W-1 MONITOR WELL
			209+96 LT												S-1 MONITOR SEPTIC SYSTEM
			210+30 LT	210+80 LT			INSTALL	(T)	1,450 SF						STONE FILL FOR STREAMBANK
															STABILIZATION
2	JAMAICA VOLUNTEER FIRE & RESCUE, INC.	3, 4	210+76.85 LT	214+50.00 LT	0.39 A							JAMAICA			16,820 SF±
	joined by THE JAMAICA TIMBER COMPANY		210+77 LT	213+61 LT			DETOUR	(T)	0.26 A						INCL. TEMP BRIDGE, GUARDRAILS AND
															CHANNEL REPAIR WORK; 11,020 SF±;
															VALUE AS ER
			210+87 LT	214+18 LT			UTILITY	(T)	0.19 A						8,240 SF±; VALUE AS ER
			211+37 LT	212+37 LT			INSTALL	(T)	475 SF						BF & EC
			211+43 LT	211+95 LT			INSTALL	(T)	1,510 SF						STONE FILL FOR STREAMBANK
															STABILIZATION
			211+60 LT	212+17 LT			SLOPE	(T)	530 SF						INCL. EC
			211+68 LT	212+36 LT			DRIVE	(T)	2,020 SF						20' DRIVE FOR DRY HYDRANT ACCESS
			211+92 LT	212+32 LT			SLOPE	(T)	1,150 SF						
			212+13 LT	212+82 LT			DRIVE	(T)	570 SF						45' PAVED, MM 0404
			212+77 LT	214+37 LT			SLOPE	(T)	1,490 SF						
			212+78 LT	212+92 LT			INSTALL & MAINT	(P)							GUARDRAIL
			213+18 LT	214+42 LT			INSTALL	(T)	640 SF						BF
3A	TOWN OF JAMAICA	4	213+78 LT	214+81 LT			APPROACH	(T)		GTR	11/05/12	JAMAICA	113	540-541	INCL. REPLACING GUARDRAIL, INSTALLING
															STONE FILL, EC & BF, GRADING AND
															PAVING CASTLE HILL ROAD TH51
3B		3	211+43 RT	212+12 RT			APPROACH	(T)							INCL. INSTALLING PDF & EC, GRADING
															AND PAVING WATER STREET TH18
			210+62 RT	211+13 RT			INSTALL	(T)	320 SF						BF & EC
4	RYBOLT, RICHARD E. & ANITA L.	3	210+49 RT	211+11 RT			INSTALL	(T)	630 SF	CONDEM	10/09/12	JAMAICA	113	465-478	EC
			210+53 RT	211+37 RT			INSTALL	(T)	2,400 SF	HEARING EXAMINER'S REPORT					STONE FILL FOR STREAMBANK
										GTR	10/17/12	JAMAICA	113	510-511	STABILIZATION
			210+64 RT	211+57.25 RT			SLOPE	(T)	1,840 SF						
5	BLUMING, JOEL W.	3	208+83 RT	209+63 RT			INSTALL	(T)	60 SF						BF
			209+43 RT	210+44 RT			INSTALL	(T)	1,450 SF						BF & EC
			209+47 RT	210+39 RT			INSTALL	(T)	2,430 SF						STONE FILL FOR STREAMBANK
															STABILIZATION
			209+75 RT	209+85 RT			SLOPE	(T)	55 SF						
			209+77 RT	209+84 RT			REMOVE	(T)							GUARDRAIL

TABLE OF REVISIONS

REVISION NO.	SHEET NO.	DESCRIPTION	DATE
1	2	PARCEL 5 BLUMING - SLOPE (T) STA 209+75 RT - 209+85 RT 55 S	07/17/12
		ADDED TO DETAIL SHEET, LAYOUT SHEET OKAY.	
		COMPLETED BY: MT C.O. #9773 APPROVED BY: HP	
2	2, 3	PARCEL 2, JAMAICA VOLUNTEER FIRE & RESCUE - ADDED 20'	08/28/12
		DRIVE FOR DRY HYDRANT ACCESS.	
		COMPLETED BY: MT C.O. #9777 APPROVED BY: HP	

PLAN LEGEND

- EXISTING RIGHT-OF-WAY
- TAKING WITH ACCESS
- TAKING WITHOUT ACCESS
- CZ — CLEAR ZONE
- P L — PROPERTY LINE
- TOE OF SLOPE
- TOP OF CUT
- SR (P) — SLOPE RIGHT
- CONST. (T) — CONSTRUCTION RIGHT
- PDF — PDF — PROJECT DEMARCATION FENCE

EC -EROSION CONTROL
(P) -PERMANENT
(T) -TEMPORARY
DR. -DRAINAGE RIGHT
DIT. -DITCHING RIGHT
CH. -CHANNEL RIGHT
DRIVE -DRIVE RIGHT
CUL. -CULVERT RIGHT
BND -BOUND (PROPERTY MARKER)
SR -SLOPE RIGHT
UE -UTILITY EASEMENT

APPROVED: HARRY PETROVS DATE: 07-05-12
CHIEF, PLANS & TITLES

PROJECT NAME: JAMAICA
PROJECT NUMBER: ER-BRF 015-1(23)

FILE NAME: r11b316DetailSheet.xls
PROJECT LEADER: K. HIGGINS
DESIGNED BY: G. LAROCHE
R.O.W. DETAIL SHEET #1

PLOT DATE: 07-DEC-2012
DRAWN BY: M. TROTTIER
CHECKED BY: E. PIERCE
SHEET 80 OF 82

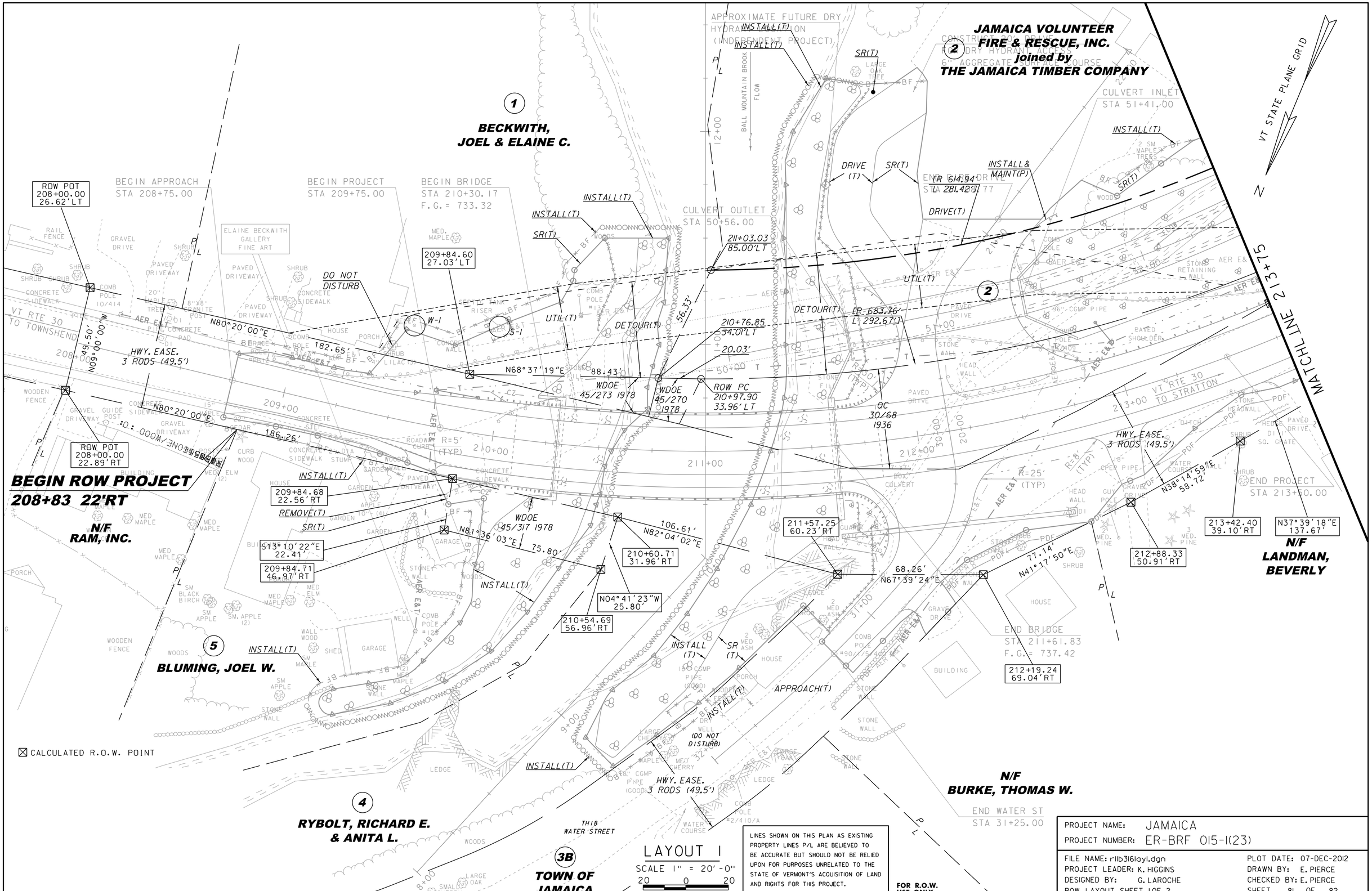

LAYOUT 1

SCALE 1" = 20'-0"

20 0 20

LINES SHOWN ON THIS PLAN AS EXISTING PROPERTY LINES P/L ARE BELIEVED TO BE ACCURATE BUT SHOULD NOT BE RELIED UPON FOR PURPOSES UNRELATED TO THE STATE OF VERMONT'S ACQUISITION OF LAND AND RIGHTS FOR THIS PROJECT.

FOR R.O.W. USE ONLY

PROJECT NAME: JAMAICA

PROJECT NUMBER: ER-BRF 015-1(23)

FILE NAME: r11b316layl.dgn

PROJECT LEADER: K. HIGGINS

DESIGNED BY: G. LAROCHE

ROW LAYOUT SHEET 1 OF 2

PLOT DATE: 07-DEC-2012

DRAWN BY: E. PIERCE

CHECKED BY: E. PIERCE

SHEET 81 OF 82

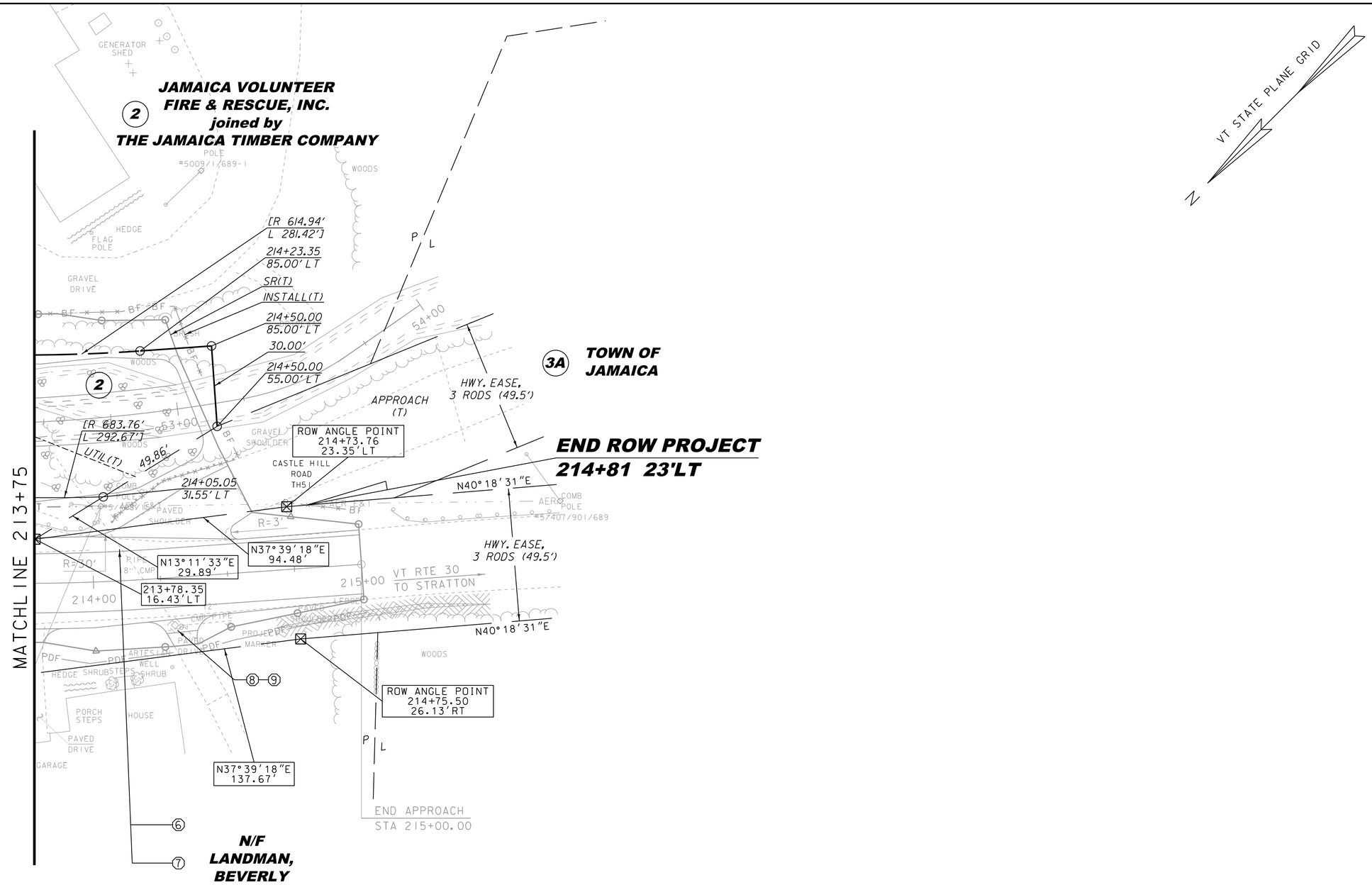

CONSTRUCT 10'-0" PAVED APRON
STA 214+19.48 - 214+42.00 RT

CULVERTS AND STORM DRAINS
(SEE DRAINAGE DETAIL SHEET)

6 STA 213+71.50 LT - 214+29.30 RT
7 STA 213+87.11 LT - 214+29.11 RT
8 STA 214+29.20 RT
9 STA 214+29.20 RT

☒ CALCULATED R.O.W. POINT

LAYOUT 2

SCALE 1" = 20'-0"
20 0 20

FOR R.O.W. USE ONLY

LINES SHOWN ON THIS PLAN AS EXISTING PROPERTY LINES P/L ARE BELIEVED TO BE ACCURATE BUT SHOULD NOT BE RELIED UPON FOR PURPOSES UNRELATED TO THE STATE OF VERMONT'S ACQUISITION OF LAND AND RIGHTS FOR THIS PROJECT.

PROJECT NAME: JAMAICA
PROJECT NUMBER: ER-BRF 015-1(23)

FILE NAME: r11b316lay2.dgn
PROJECT LEADER: K. HIGGINS
DESIGNED BY: G. LAROCHE
ROW LAYOUT SHEET 2 OF 2

PLOT DATE: 07-DEC-2012
DRAWN BY: E. PIERCE
CHECKED BY: E. PIERCE
SHEET 82 OF 82

CONCRETE GENERAL NOTES

1. ALL EXPOSED EDGES OF CONCRETE SHALL BE CHAMFERED 1" x 1"

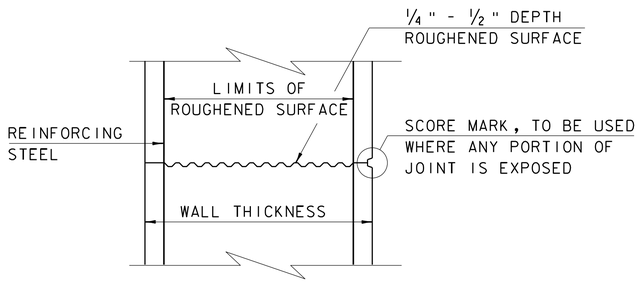

TYPICAL HORIZONTAL CONSTRUCTION JOINT
(NOT TO SCALE)

1. THE SURFACE OF THE CONCRETE CONSTRUCTION JOINTS SHALL BE CLEANED AND FREE OF LAITANCE.

2. IMMEDIATELY BEFORE NEW CONCRETE IS PLACED, ALL CONSTRUCTION JOINTS SHALL BE WETTED AND STANDING WATER REMOVED.

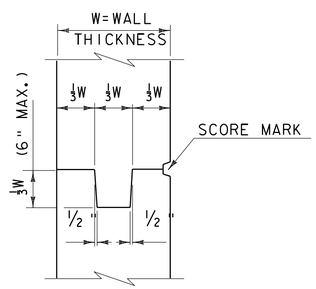

TYPICAL CONCRETE CONSTRUCTION JOINT
(NOT TO SCALE)

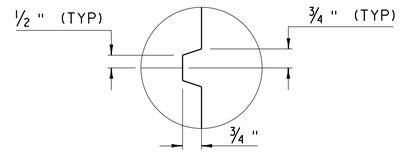

SCORE MARK DETAIL
(NOT TO SCALE)

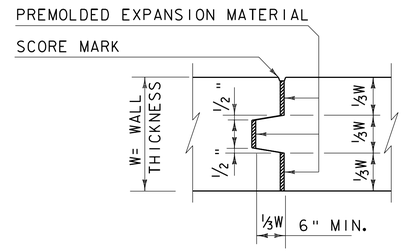

TYPICAL CONCRETE EXPANSION JOINT
(NOT TO SCALE)

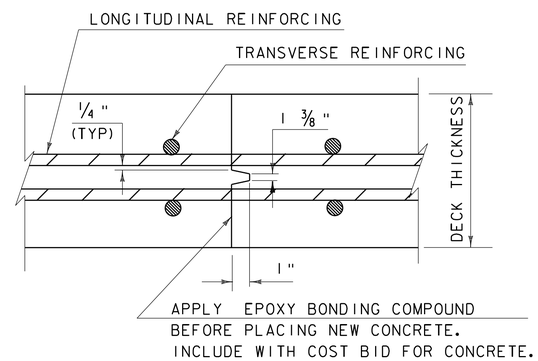

TRANSVERSE BRIDGE SLAB CONSTRUCTION JOINT DETAILS
(NOT TO SCALE)

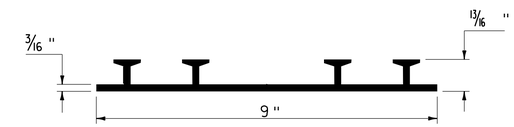

P.V.C. WATERSTOP FOR CONSTRUCTION JOINTS
(NOT TO SCALE)

PAYMENT FOR THE P.V.C. WATERSTOP SHALL BE INCIDENTAL TO THE UNIT BID PRICE FOR THE ADJACENT CONCRETE.

OTHER CONFIGURATIONS OF WATERSTOP MAY BE USED UPON APPROVAL OF THE ENGINEER.

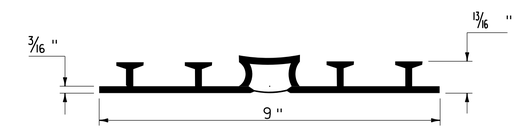

P.V.C. WATERSTOP FOR EXPANSION JOINTS
(NOT TO SCALE)

PAYMENT FOR THE P.V.C. WATERSTOP SHALL BE INCIDENTAL TO THE UNIT BID PRICE FOR THE ADJACENT CONCRETE.

OTHER CONFIGURATIONS OF WATERSTOP MAY BE USED UPON APPROVAL OF THE ENGINEER.

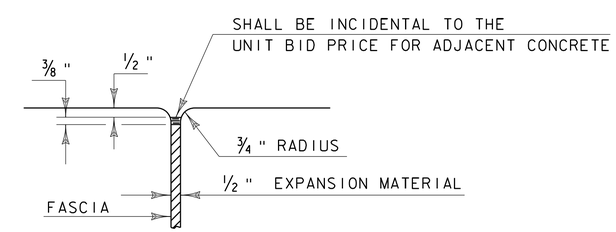

JOINT BETWEEN FASCIA AND WINGWALL
(NOT TO SCALE)

REVISIONS	
MAY 7, 2010	APPROVED FOR USE BY VAOT STRUCTURES SECTION

CONCRETE DETAILS AND NOTES

VERMONT AGENCY OF TRANSPORTATION
STRUCTURES - SECTION

STRUCTURES DETAIL
SD-501.00

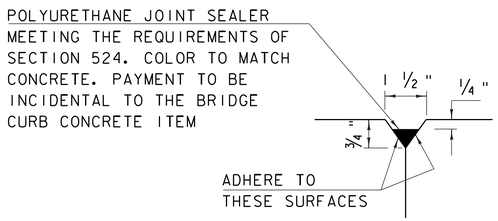

DETAIL "B"
(NOT TO SCALE)

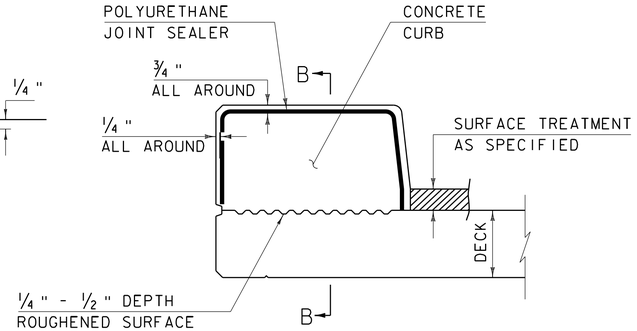

CONCRETE CURB JOINT SECTION
(NOT TO SCALE)

1. SEE TYPICAL HORIZONTAL CONSTRUCTION JOINT DETAIL FOR ADDITIONAL INFORMATION

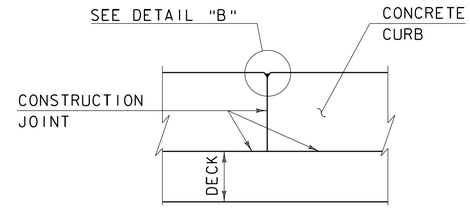

SECTION B - B
(NOT TO SCALE)

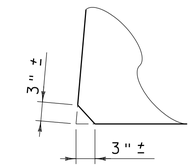

ACUTE ANGLE CLIP DETAIL
(NOT TO SCALE)

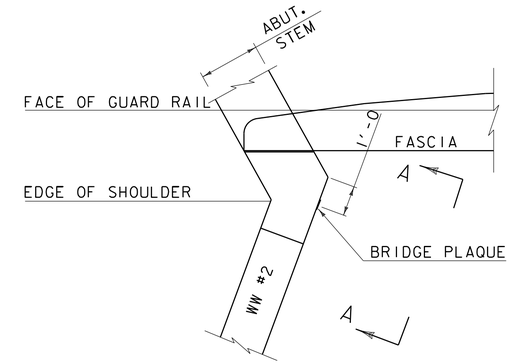

PLAN

CONCRETE CURB JOINT NOTES

1. CONCRETE CURBS MAY BE PLACED IN ONE CONTINUOUS OPERATION IF AN APPROVED SHRINKAGE REDUCING ADMIXTURE LISTED IN THE SPECIAL PROVISIONS IS USED WITH THE CONCRETE MIX DESIGN. PAYMENT FOR THE SHRINKAGE REDUCING ADMIXTURE WILL BE INCIDENTAL TO THE BRIDGE CURB CONCRETE ITEM.

2. IF THE CONTRACTOR CHOOSES NOT TO USE AN APPROVED SHRINKAGE REDUCING ADMIXTURE, THE CURBS SHALL BE CONSTRUCTED WITH CONSTRUCTION JOINTS SPACED AT A MAXIMUM OF 15'-0" CENTER TO CENTER AND 2'-0" MINIMUM FROM THE CENTER OF NEAREST BRIDGE RAILING POST.

3. ON MULTI-SPAN CONTINUOUS SUPERSTRUCTURES, REGARDLESS OF WHETHER APPROVED SHRINKAGE REDUCING ADMIXTURE IS USED, CURB JOINTS SHALL BE LOCATED OVER THE CENTERLINE OF PIERS AND 7'-0" EACH SIDE OF THE CENTERLINE OF EACH PIER.

4. WHEN CURB JOINTS ARE USED THE CURBS SHALL BE PLACED IN ALTERNATE SECTIONS WITH A MINIMUM OF 48 HOUR DELAY BETWEEN ADJACENT PLACEMENTS.

5. LONGITUDINAL REINFORCING SHALL BE CONTINUOUS THROUGH CURB CONSTRUCTION JOINTS. CURB STIRRUP BARS SHALL BE TURNED AS NECESSARY TO MAINTAIN COVER IN THE FLARED CURB ENDS.

6. THE JOINT SPACING AND DETAILS SHOWN SHALL APPLY TO SIDEWALKS WHEN SHOWN IN THE PLANS.

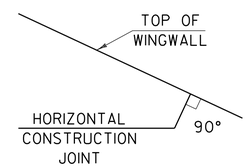

HORIZONTAL WINGWALL CONSTRUCTION JOINT
(NOT TO SCALE)

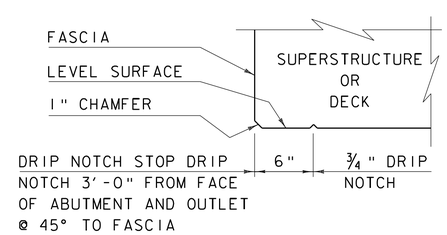

DRIP NOTCH DETAIL
(NOT TO SCALE)

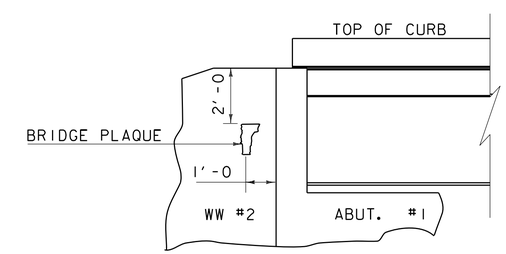

VIEW "A - A"

BRIDGE PLAQUE
(NOT TO SCALE)

THE BRIDGE PLAQUE WILL BE SUPPLIED BY THE AGENCY OF TRANSPORTATION AND SHALL BE INSTALLED BY THE CONTRACTOR AT ABUTMENT #1 ON THE RIGHT SIDE AS SHOWN OR AS DIRECTED BY THE ENGINEER.

PAYMENT FOR INSTALLATION OF THE BRIDGE PLAQUE SHALL BE INCIDENTAL TO THE ADJACENT CONCRETE.

REVISIONS

MAY 7, 2010	APPROVED FOR USE BY VAOT STRUCTURES SECTION
JUNE 4, 2010	MODIFIED AND ADDED TWO DETAILS

CONCRETE DETAILS AND NOTES

VERMONT AGENCY OF TRANSPORTATION
STRUCTURES - SECTION

STRUCTURES DETAIL
SD-502.00

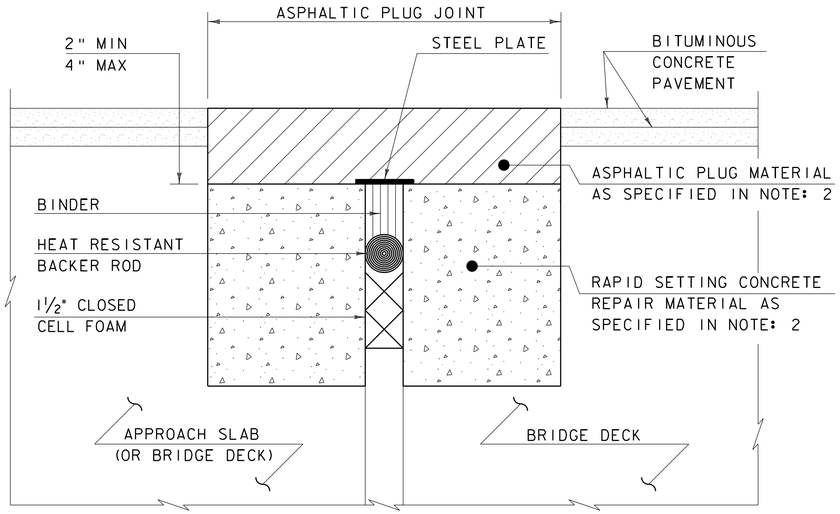

ASPHALTIC PLUG-TYPE JOINT DETAIL - REHAB

NOTES: (NOT TO SCALE)

1. THE CONTRACTOR SHALL REMOVE ALL ASPHALTIC PLUG JOINT MATERIAL AND DETERIORATED CONCRETE AS DIRECTED BY THE ENGINEER. REMOVAL OF THE FIRST 4 INCHES OF MATERIAL SHALL BE INCLUDED IN THE BID PRICE FOR ITEM 516.10 BRIDGE EXPANSION JOINT, ASPHALTIC PLUG. ANY REMOVAL OF MATERIAL GREATER THAN 4 INCHES SHALL BE INCLUDED IN THE BID PRICE OF ITEM 580.20 RAPID SETTING CONCRETE REPAIR MATERIAL WITH COURSE AGGREGATE.

2. THE CONTRACTOR SHALL REPLACE REMOVED MATERIAL THAT IS LESS THAN 4" FROM FINISHED GRADE WITH ASPHALTIC PLUG JOINT MATERIAL MEETING THE REQUIREMENTS OF SUBSECTION 707.15. ALL REMOVED MATERIAL THAT IS GREATER THAN 4 INCHES FROM FINISHED GRADE SHALL BE REPLACED WITH RAPID SETTING CONCRETE REPAIR MATERIAL WITH COARSE AGGREGATE MEETING THE REQUIREMENTS OF SUBSECTION 780.04.

3. REINFORCING STEEL NOT SHOWN FOR CLARITY.

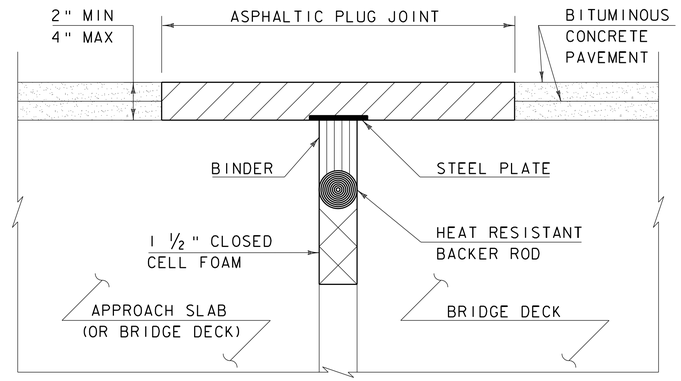

ASPHALTIC PLUG-TYPE JOINT DETAIL - NEW

(NOT TO SCALE)

ASPHALTIC PLUG JOINT NOTES

INSTALLATION:

1. LOCATE THE JOINT CENTRALLY OVER THE DECK OVERLAY EXPANSION GAP OR FIXED JOINT, MARKED OUT TO THE MANUFACTURER'S RECOMMENDED WIDTH.

2. REMOVE THE BITUMINOUS CONCRETE PAVEMENT FULL DEPTH AS SHOWN ON THE PLANS. THE PAVEMENT SHALL BE DRY AND SAW CUT TO THE LIMITS REQUIRED TO PLACE THE JOINT. A PNEUMATIC HAMMER AND CHISEL MAY BE USED ADJACENT TO THE CURB ONLY WHEN SAW CUTTING IS NOT POSSIBLE.

3. BLAST CLEAN THE JOINT AREA OF DEBRIS, ASPHALT AND SHEET MEMBRANE. THOROUGHLY DRY THE JOINT AREA WITH COMPRESSED AIR PRIOR TO APPLYING BINDER MATERIAL.

4. REPAIR MATERIAL GREATER THAN 4 INCHES FROM FINISHED GRADE WITH RAPID SETTING CONCRETE REPAIR MATERIAL WITH COARSE AGGREGATE MEETING THE REQUIREMENTS OF SUBSECTION 780.04.

5. PLACE PROPERLY SIZED HEAT RESISTANT BACKER ROD IN THE MOVEMENT GAP ALLOWING FOR 1" +/- OF BINDER ABOVE THE ROD.

6. HEAT AND PLACE THE BINDER MATERIAL AS RECOMMENDED BY THE MANUFACTURER.

7. PLACE 1/4" THICK BY 8" WIDE SECTIONS OF STEEL PLATE OVER THE CENTER OF THE MOVEMENT GAP. SECURE THE PLATES FROM MOVING BY INSERTING LOCATING PINS THROUGH THE PRE-STAMPED HOLES INTO BACKER ROD AND COVER WITH HOT BINDER. THE STEEL PLATES MAY BE OMITTED WHERE THE ENGINEER DETERMINES THAT THE APPROACH SLAB OR BRIDGE DECK WILL PROVIDE INADEQUATE SUPPORT AND WHERE VERTICAL MOVEMENT OF THE PLATES MIGHT OCCUR.

8. HEAT AND MIX THE BINDER MATERIAL AND AGGREGATE AS RECOMMENDED BY THE MANUFACTURER.

9. INSTALLATION OF MATERIAL, COMPACTION, AND TOP COATING SHALL BE AS RECOMMENDED BY THE MANUFACTURER.

10. IMMEDIATELY AFTER TOP COATING, CAST AN ANTI-SKID MATERIAL OVER THE JOINT TO REDUCE THE RISK OF TRACKING.

11. ONCE THE JOINT REACHES 82 DEG C (180 DEG F) +/-, WATER MAY BE USED TO EXPEDITE THE COOLING PROCESS.

12. PROTECT JOINT FROM TRAFFIC UNTIL THE MATERIAL HAS COOLED TO 51 DEG C (125 DEG F) +/-.

WEATHER LIMITATIONS

APPLY BINDER MATERIAL ONLY WHEN THE FOLLOWING CONDITIONS PREVAIL OR AS RECOMMENDED BY THE MANUFACTURER:

1. THE AMBIENT AIR TEMPERATURE IS AT LEAST 10 DEG C (50 DEG F) AND RISING.

2. THE ROAD SURFACE IS DRY.

3. WEATHER CONDITIONS OR OTHER CONDITIONS ARE FAVORABLE AND ARE EXPECTED TO REMAIN SO FOR THE PERFORMANCE OF SATISFACTORY WORK.

REVISIONS	
MAY 7, 2010	APPROVED FOR USE BY VAOT STRUCTURES SECTION

BRIDGE JOINT ASPHALTIC PLUG

VERMONT AGENCY OF TRANSPORTATION
STRUCTURES - DIVISION

STRUCTURES DETAIL

SD-516.10

STRUCTURAL STEEL GENERAL NOTES:

1. ALL FIELD CONNECTIONS SHALL BE MADE WITH 7/8" DIAMETER HIGH-STRENGTH BOLTS IN 15/16" DIAMETER HOLES, PER SUBSECTION 506.19, UNLESS OTHERWISE SPECIFIED.
2. ALL HOLES IN THE WEBS OF THE FASCIA GIRDERS THAT ARE NOT OTHERWISE FILLED, SHALL BE FILLED WITH EITHER BUTTON HEAD OR HEX HEAD BOLTS. THESE BOLTS SHALL BE TIGHTENED IN ACCORDANCE WITH SUBSECTION 506.19.
3. ALL WELDING SHALL CONFORM TO THE PROVISIONS OF SUBSECTION 506.10.
4. ANY CONNECTIONS THAT ARE NOT DETAILED ON THE PLANS SHALL BE DETAILED BY THE FABRICATOR AND SUBMITTED TO THE STRUCTURES ENGINEER FOR APPROVAL.
5. STRUCTURAL STEEL MEMBERS DESIGNATED "CVN" IN THE PLANS SHALL BE CHARPY V-NOTCH TESTED IN ACCORDANCE WITH SUBSECTION 714.01 OF THE STANDARD SPECIFICATIONS.
6. ENDS OF GIRDERS ARE TO BE VERTICAL IN THEIR FINAL POSITION.
7. AFTER SUPERSTRUCTURE STEEL HAS BEEN ERECTED, ELEVATIONS ALONG THE TOP OF THE GIRDERS SHALL BE TAKEN AS DIRECTED BY THE RESIDENT ENGINEER FOR USE IN DETERMINING FINISHED GRADES.

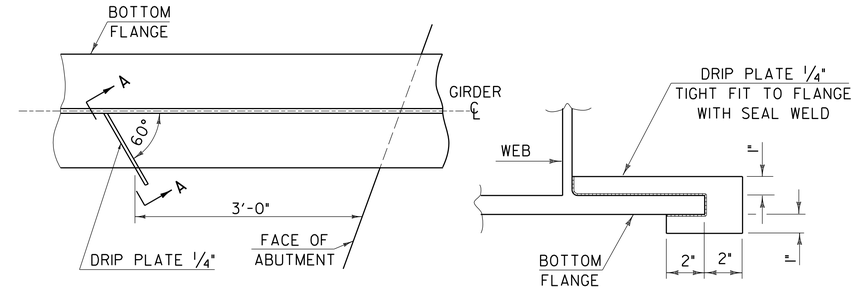

PLAN DRIP PLATE

SECTION A - A

NOTE: DRIP PLATES SHALL BE PLACED ON OUTSIDE EDGE OF FASCIA GIRDERS ON THE HIGH SIDE OF ALL PIERS AND ABUTMENTS OR AS INDICATED ON PROJECT PLANS.

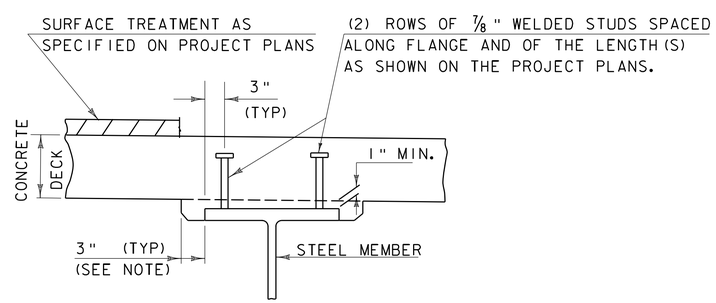

NOTE:
THE 3" HORIZONTAL SECTION MAY BE ELIMINATED FOR FORMING SYSTEMS DESIGNED FOR THE CONSTRUCTION OF VERTICAL HAUNCHES. ANY VOIDS RESULTING FROM FORMING SYSTEM ELEMENTS SHALL BE FILLED WITH JOINT SEALER, POLYURETHANE MEETING THE REQUIREMENTS OF SECTION 524. THE COST OF THE JOINT SEALER, POLYURETHANE SHALL BE INCIDENTAL TO THE ADJACENT CONCRETE.

HAUNCH AND SHEAR CONNECTOR DETAIL

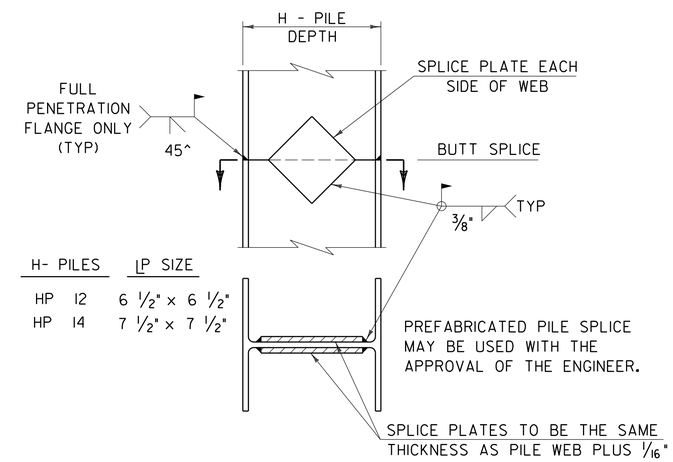

H- PILES	LP SIZE
HP 12	6 1/2" x 6 1/2"
HP 14	7 1/2" x 7 1/2"

DETAIL OF PILE SPLICE

DETAILS ON THIS SHEET ARE "NOT TO SCALE" UNLESS NOTED OTHERWISE.

REVISIONS	
MAY 7, 2010	APPROVED FOR USE BY VAOT STRUCTURES SECTION
JUNE 4, 2010	MODIFIED NOTES

STRUCTURAL STEEL DETAILS & NOTES

VERMONT AGENCY OF TRANSPORTATION
STRUCTURES - SECTION

STRUCTURES DETAIL

SD-601.00

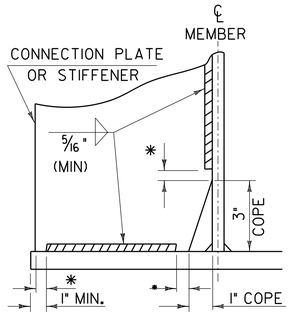

WELD TERMINATION AND COPING DETAILS FOR STEEL MEMBERS

*NO WELD FOR 3/8" MIN. 7/8" MAX. (EXCEPT MUST MAINTAIN 1" MINIMUM FROM EDGE OF FLANGE)

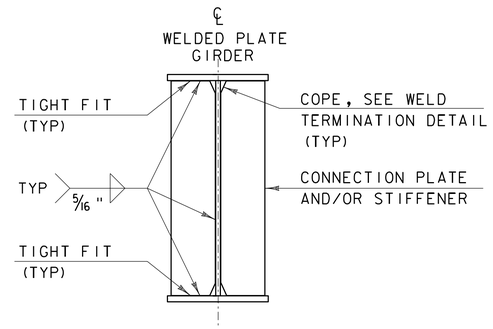

INTERMEDIATE CONNECTION PLATES AND/OR STIFFENERS FOR WELDED PLATE GIRDERS

INTERMEDIATE DETAIL IS ONLY USED WHEN PLATE DOES NOT OCCUR AT AN ABUTMENT OR PIER.

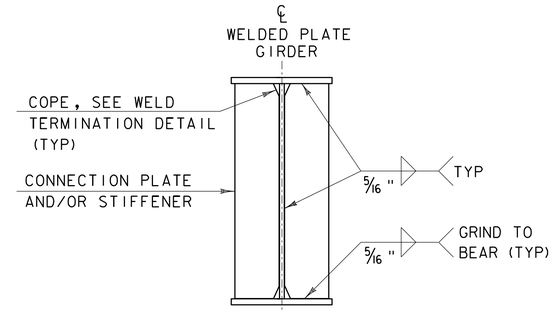

ABUTMENT BEARING STIFFENERS AND/OR CONNECTION PLATES FOR WELDED PLATE GIRDERS

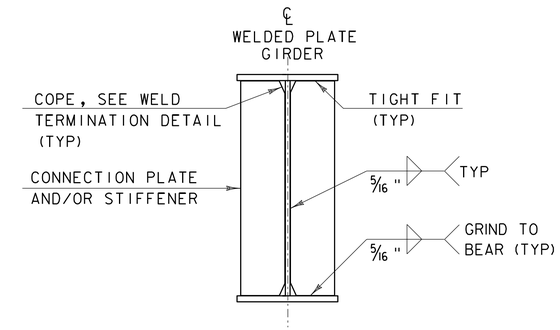

PIER BEARING STIFFENERS AND/OR CONNECTION PLATES FOR WELDED PLATE GIRDERS

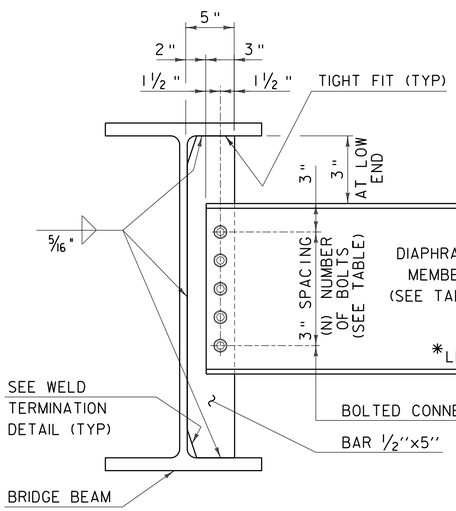

DEPTH		DIAPHRAGM MEMBER	(N) BOLTS
ROLLED BEAM	24" 30"	C15x33.9	4
	31" 36"	MC18x42.7	5
	37" 42"	W21x44	6
PLATE GIRDER WEB	31" 36"	W27x84	7
	37" 42"	W33x118	9
	43" 48"	W36x135	10

INTERMEDIATE DIAPHRAGMS FOR 24" TO 48" BRIDGE BEAMS

* IF CLEARANCE CANNOT BE MET, DIAPHRAGM MAY BE SLOPED.

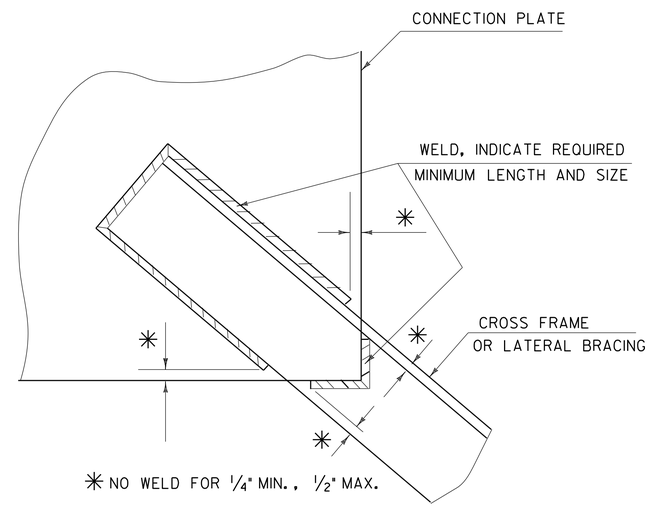

WELD LOCATION DETAIL AT CROSS FRAMES AND LATERAL BRACING

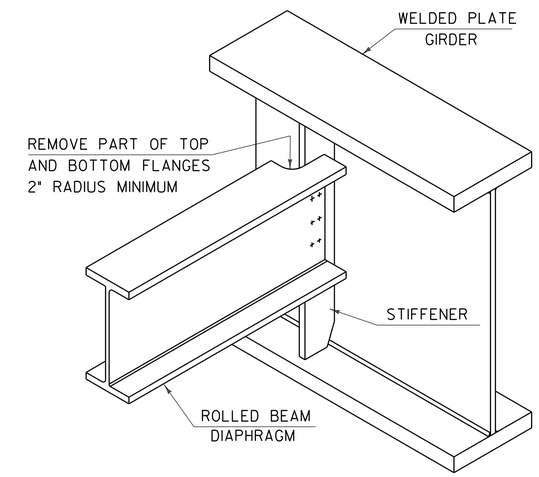

SEE CONTRACT DRAWINGS FOR SIZES OF MEMBERS AND CONNECTION DETAILS

ROLLED BEAM USED AS DIAPHRAGM

DETAILS ON THIS SHEET ARE "NOT TO SCALE" UNLESS NOTED OTHERWISE.

REVISIONS	
MAY 7, 2010	APPROVED FOR USE BY VAOT STRUCTURES SECTION
MAY 2, 2011	ADD INTERMEDIATE DIAPHRAGMS DETAIL & ADD NOT TO SCALE NOTE

STRUCTURAL STEEL PLATE GIRDER DETAILS AND NOTES

VERMONT AGENCY OF TRANSPORTATION * STRUCTURES - SECTION *

STRUCTURES DETAIL

SD-602.00

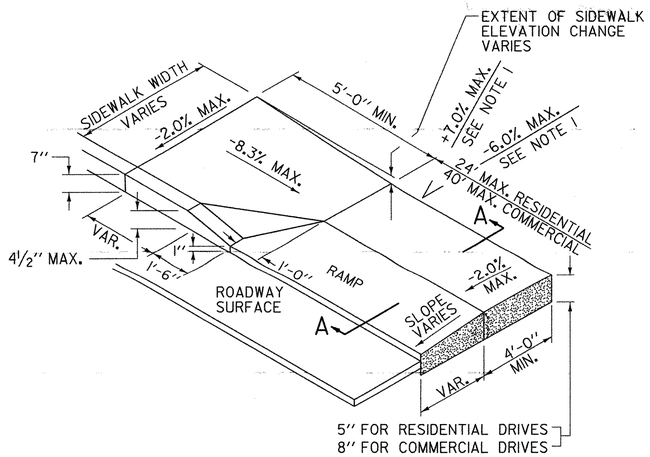

TYPE 1 – COMBINATION CROSSING WITH FLARE

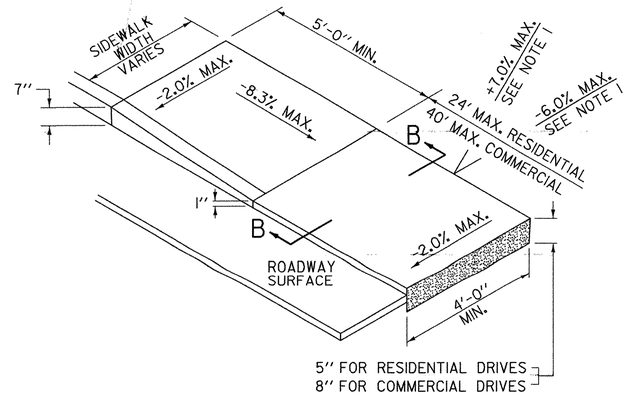

TYPE 2 – PARALLEL CROSSING WITH LANDING

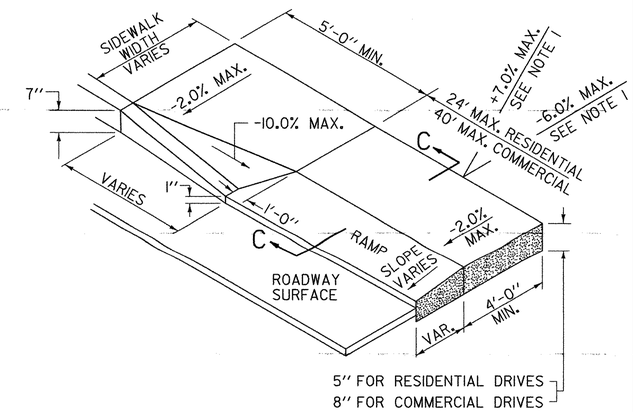

TYPE 3 – LEVEL LANDING WITH FLARE

GENERAL NOTES :

1. THESE TYPICALS APPLY WHERE GRADE OF DRIVE IS BETWEEN -6.0% AND +7.0%. FOR GRADES IN EXCESS OF THESE, ALTERNATIVE CROSS SECTION OF RAMP AND SIDEWALK MAY BE APPROVED BY THE ENGINEER.
2. DUMMY JOINTS SHALL BE PROVIDED AT TRANSITIONS (GRADE CHANGES) OF RAMPS AND FLARES.
3. DRIVEWAY RAMPS TO BE PAID FOR AS PORTLAND CEMENT CONCRETE SIDEWALK.
4. SIDEWALKS THAT ARE LESS THAN 5' WIDE REQUIRE 5' WIDE BY 5' LONG PASSING AREAS (NO GREATER THAN 2.0% CROSS SLOPE) AT INTERVALS NOT TO EXCEED 200'. DRIVEWAYS MEETING THESE REQUIREMENTS MAY BE USED AS A WHEELCHAIR PASSING AREA.
5. IN NO CASE SHALL THE CROSS SLOPE OF AN ACCESSIBLE ROUTE EXCEED 2.0%.

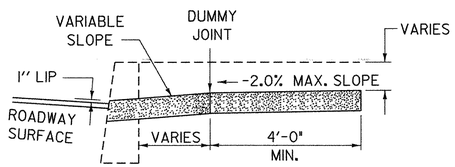

SECTION A – A

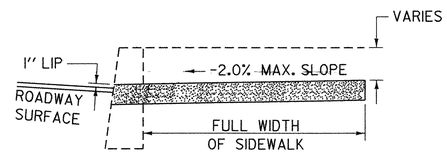

SECTION B – B

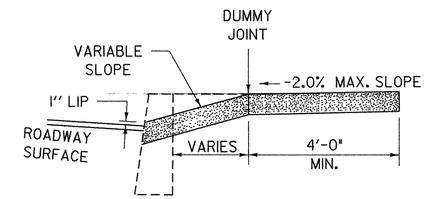

SECTION C – C

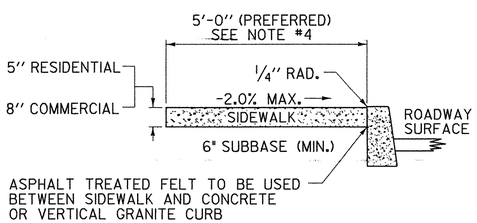

PORTLAND CEMENT CONCRETE SIDEWALK

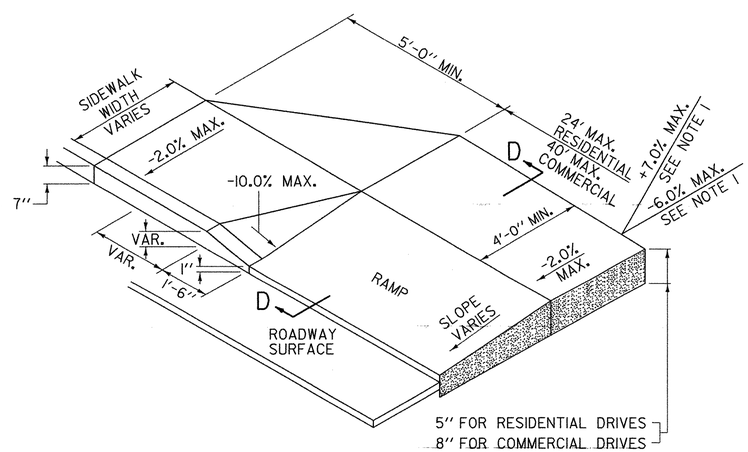

TYPE 4 – JOGGED CROSSING

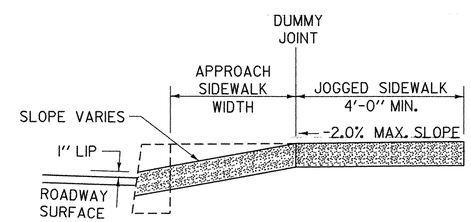

SECTION D–D

OTHER STANDARDS REQUIRED: B-71

REVISIONS AND CORRECTIONS

DEC. 14, 1971 - ORIGINAL APPROVAL DATE

OCT. 25, 1985 - REVISED TO CONFORM TO 1986 SPECIFICATIONS

JUNE 1, 1994 - REISSUED WITHOUT CHANGE, UNDER NEW SIGNATURES.

JAN. 3, 2000 - UPDATED TO REFLECT METRIC STD. CHANGES.

OCT. 14, 2005 - UPDATED TO REFLECT REVISED ADAAG STANDARDS

APPROVED

Asst DIRECTOR OF PROGRAM DEVELOPMENT

Kevin A. Marshia

ROADWAY PROGRAM MANAGER

FEDERAL HIGHWAY ADMINISTRATION

PORTLAND CEMENT CONCRETE SIDEWALK DRIVE ENTRANCES WITH SIDEWALK ADJACENT TO CURB

VERMONT AGENCY OF TRANSPORTATION

STANDARD

C-2A

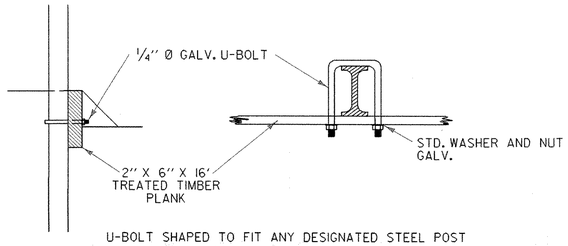

U-BOLT SHAPED TO FIT ANY DESIGNATED STEEL POST

WITH STEEL POSTS

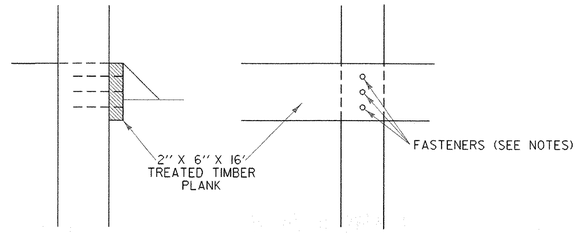

WITH WOOD POSTS (EXISTING CONDITION)

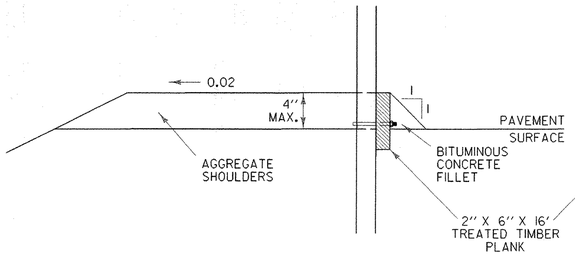

BITUMINOUS CONCRETE FILLET DETAIL

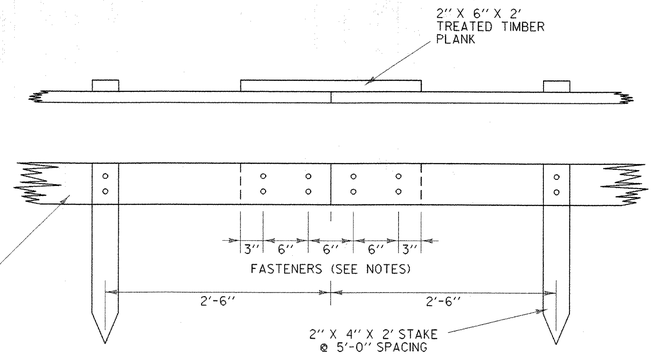

SPLICE DETAIL

TREATED TIMBER CURB

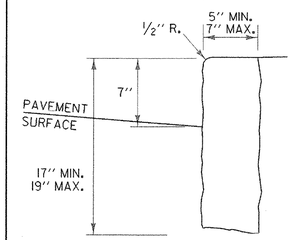

VERTICAL GRANITE CURB

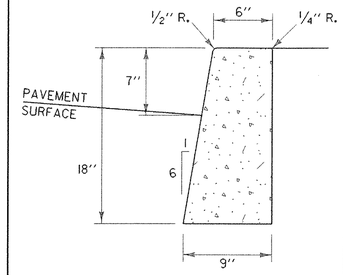

CAST IN PLACE CONCRETE CURB, TYPE B

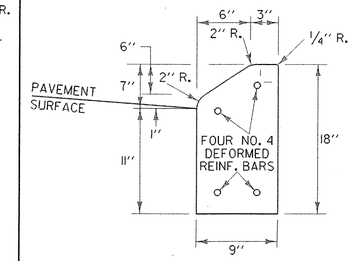

PRECAST REINFORCED CONCRETE CURB, TYPE A

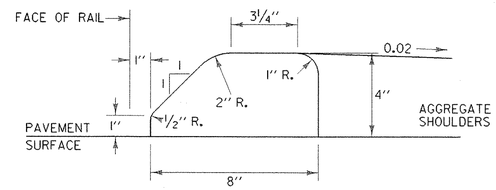

USE ONLY WITH STEEL BEAM GUARDRAIL

BITUMINOUS CONCRETE CURB, TYPE A

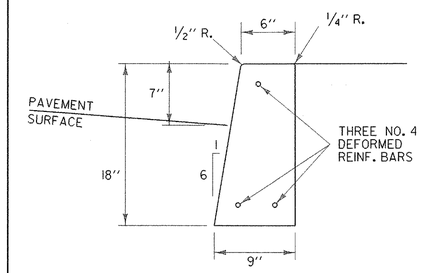

PRECAST REINFORCED CONCRETE CURB, TYPE B

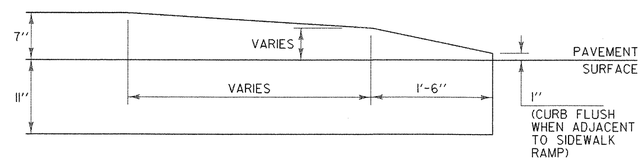

CONCRETE CURB END

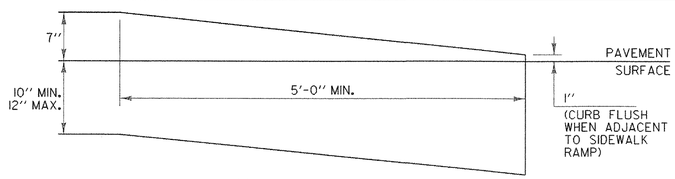

VERTICAL GRANITE CURB END

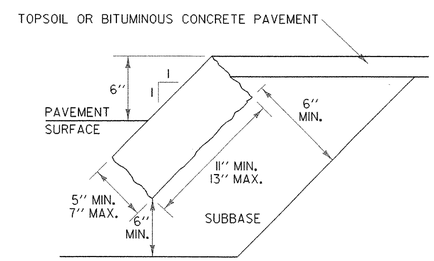

EDGING TO BE PLACED PRIOR TO PLACING TOP SURFACE COURSE.

GRANITE SLOPE EDGING

GENERAL NOTES:

1. HEIGHT OF REVEAL OF CURB SHALL NOT EXCEED FOUR INCHES WHERE DESIGN OR POSTED SPEED IS EQUAL TO OR GREATER THAN 40 MPH AND WHEN INSTALLED WITH GUARDRAIL (STANDARD SHAPE TO BE BURIED TO THIS DEPTH).
2. WHEN CONCRETE SIDEWALK IS CONSTRUCTED ADJACENT TO CONCRETE OR VERTICAL GRANITE CURB, ASPHALT TREATED FELT SHALL BE PLACED BETWEEN THE SIDEWALK AND CURB FOR THE TOTAL DEPTH OF THE SIDEWALK.
3. FASTENERS (20d NAILS OR SCREWS) SHALL BE CORROSION RESISTANT TO THE TREATED LUMBER.
4. FOR SPECIFICATIONS FOR EXPANSION/CONTRACTION JOINTS AND LENGTHS OF SECTIONS, SEE SECTION 616.
5. JOINTS BETWEEN CURB SECTIONS SHALL BE MORTARED IN CONFORMANCE WITH SECTION 616.
6. BITUMINOUS CONCRETE AND TREATED TIMBER CURB SHALL BE IN CONFORMANCE WITH SECTION 616.
7. TWO INCH MINIMUM CLEARANCE FROM FACE OF CONCRETE TO EDGE OF REINFORCING STEEL.

OTHER STDS. REQUIRED: **NONE**

REVISIONS AND CORRECTIONS

FEB. 11, 2008 - ORIGINAL APPROVAL DATE

APPROVED

Kevin S. Marshia
ROADWAY, TRAFFIC & SAFETY ENGINEER

DIRECTOR OF PROGRAM DEVELOPMENT

Mark D. Richter
FEDERAL HIGHWAY ADMINISTRATION

CURBING

VERMONT AGENCY OF TRANSPORTATION

STANDARD

C-10

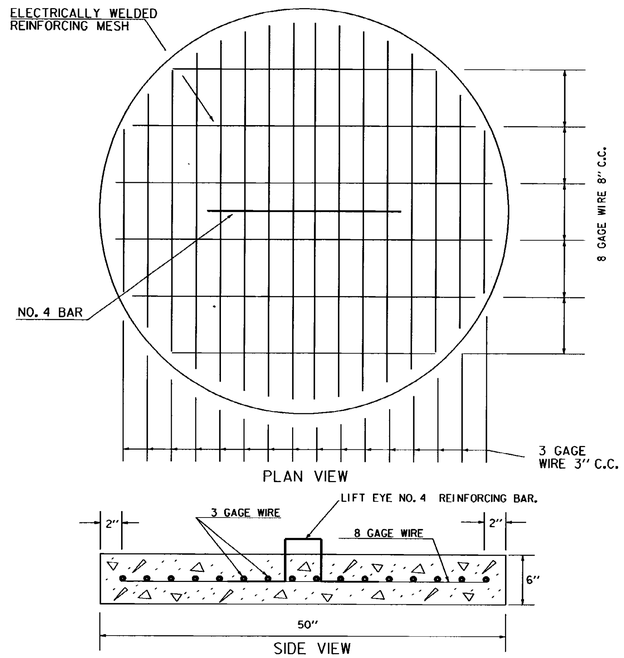

PRECAST REINFORCED CONCRETE BASE

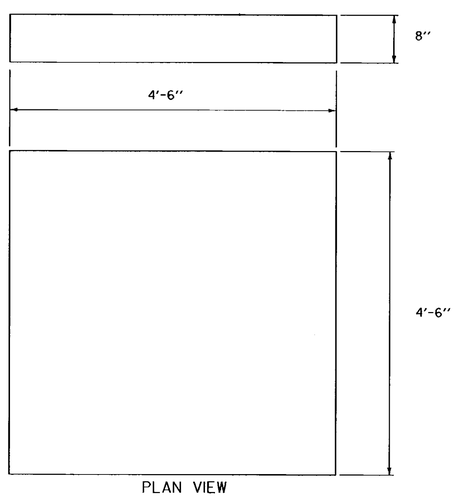

DROP INLET PIPE BASE CAST IN PLACE
(CONCRETE CONFORMING TO STRUCTURAL CONCRETE CLASS B)

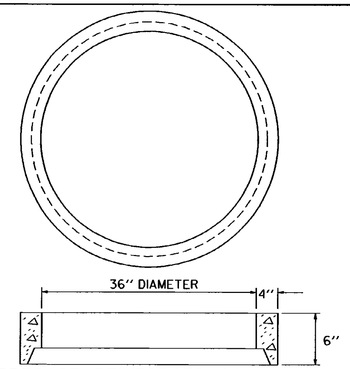

PRECAST REINFORCED CONCRETE PIPE RISER

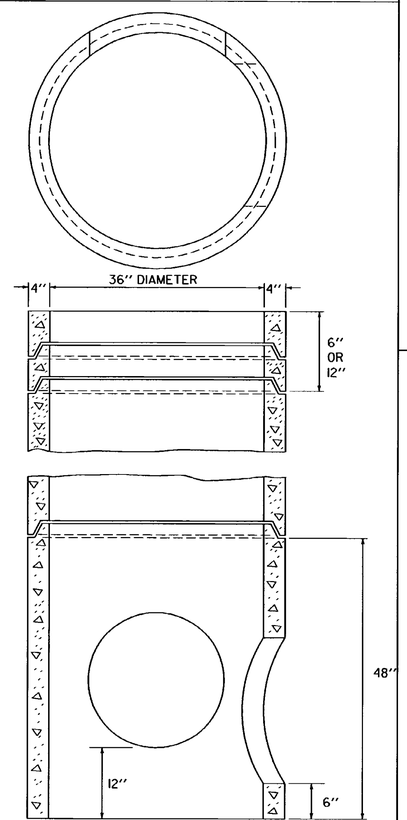

PIPE SECTIONS FOR DROP INLETS

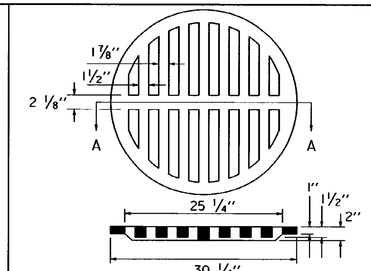

SECTION A-A
CAST IRON GRATE

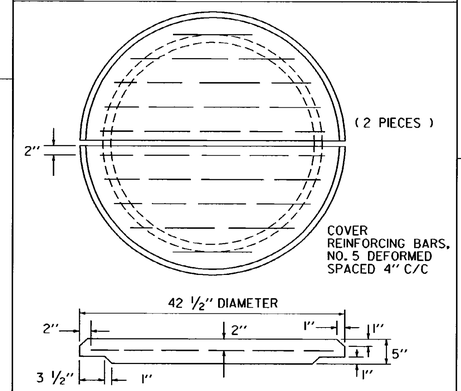

PRECAST REINFORCED CONCRETE COVER

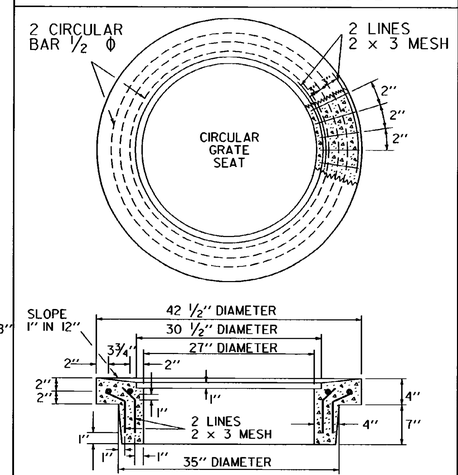

PRECAST REINFORCED CONCRETE RING FOR GRATE

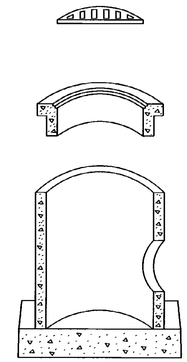

PRECAST REINFORCED CONCRETE PIPE DROP INLET WITH CAST IRON GRATE

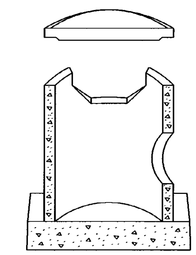

PRECAST REINFORCED CONCRETE PIPE DROP INLET WITH CONCRETE COVER

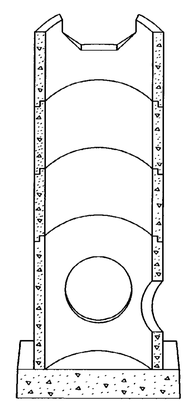

PRECAST REINFORCED CONCRETE PIPE DROP INLET WITH THROATED RISER

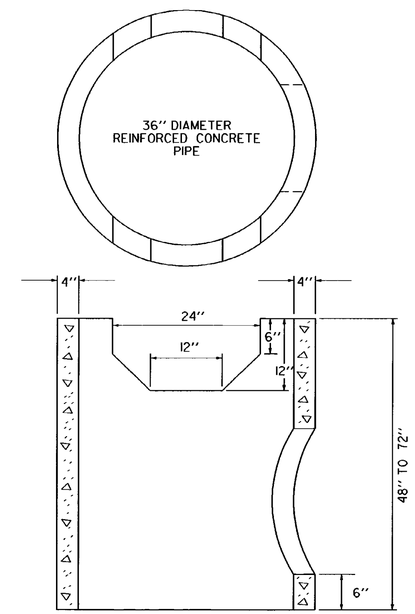

PRECAST REINFORCED CONCRETE PIPE DROP INLET WITH THROAT

NOTE :
THESE DROP INLETS SHOULD NOT BE USED IN AREAS OF VEHICULAR TRAFFIC OR IN BENCHES ON CUT SLOPES

REVISIONS AND CORRECTIONS

DEC. 6, 1971 - ORIGINAL APPROVAL DATE
JUNE 1, 1994 - REISSUED, WITHOUT CHANGE, UNDER NEW SIGNATURES.

APPROVED

APPROVED FOR THIS PROJECT AND/OR DESIGN IMPLEMENTATION. FHWA FINAL APPROVAL PENDING.

Gordon S. MacArthur, P.E.
DIRECTOR OF ENGINEERING

Robert D. Murphy, P.E.
DESIGN ENGINEER

PRECAST REINFORCED CONCRETE PIPE DROP INLET WITH CAST IRON GRATE

PRECAST REINFORCED CONCRETE PIPE DROP INLET WITH CONCRETE COVER

VERMONT AGENCY OF TRANSPORTATION

STANDARD

D-1

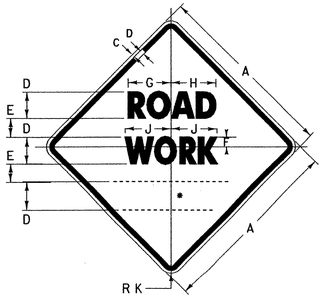

W20-1

• SEE DISTANCE DETAILS

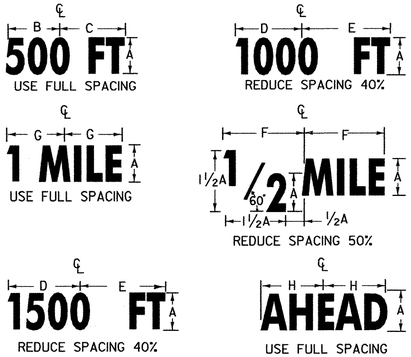

DISTANCE DETAILS

SIGN	DIMENSIONS (INCHES)									
	A	B	C	D	E	F	G	H	J	K
MIN.	36	5/8	7/8	5D	3 1/2	3 1/4	8 3/8	8 7/8	9	2 1/4
STD.	48	3/4	1 1/4	7D	4 3/4	4 1/2	11 11/16	12 7/16	12 5/8	3

DIMENSIONS (INCHES)							
A	B	C	D	E	F	G	H
5D	10 3/16	10 3/16	11 5/8	11 1/4	11 1/4	9 1/2	10 7/8
7D	14 1/4	15 1/8	14 7/8	15 3/4	15 3/4	13 1/16	15 1/2

(ALL DIMENSIONS SHOWN IN INCHES)

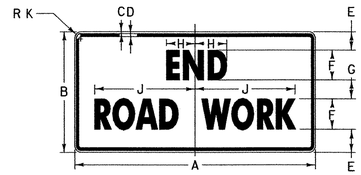

G20-2A

SIGN	DIMENSIONS (INCHES)									
	A	B	C	D	E	F	G	H	J	K
MIN.	36	18	5/8	7/8	3 3/4	4C	2 1/2	4	12 5/8	2 1/4
STD.	48	24	3/4	1 1/4	4 1/8	6C	3 3/4	5 7/8	22	3

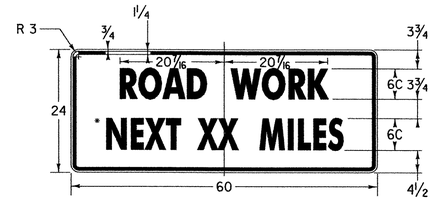

G20-1

• OPTICALLY CENTER

THIS SIGN TO BE USED WHEN PROJECT LENGTH EXCEEDS 2 MILES OR AS REQUESTED BY THE RESIDENT ENGINEER. SHOW MILEAGE TO NEAREST 1/4 MILE USING FRACTIONS, NOT DECIMALS. HAND LETTERING OF MILEAGE WILL NOT BE ALLOWED.

NOTES

THE SIGNS SHOWN ON THIS SHEET ARE INTENDED FOR USE IN PROVIDING ADVANCE WARNING AND INFORMATION ON CONSTRUCTION PROJECTS OVER WHICH TRAFFIC WILL BE MAINTAINED. WHEN ADDITIONAL APPROACH SIGNS OR OTHER TYPES OF ADVANCE SIGNING OR CONTROL ARE NECESSARY, THE PLANS AND\OR THE SPECIFICATIONS FOR THAT PROJECT WILL GIVE THE DETAILS OF THE SIGNS AND DEVICES REQUIRED. FOR ON-PROJECT CONSTRUCTION SIGNS, REFER TO APPROPRIATE STANDARD SHEETS.

APPLICATION OF STANDARDS

SINCE IT IS NOT POSSIBLE TO PRESCRIBE DETAILED STANDARDS OF APPLICATION FOR ALL OF THE SITUATIONS THAT MAY CONCEIVABLY ARISE ON A CONSTRUCTION PROJECT, REFERENCE SHALL BE MADE TO THE "MANUAL ON UNIFORM TRAFFIC CONTROL DEVICES" FOR THE PRINCIPLES, PROCEDURES, AND STANDARDS THAT WILL BE REQUIRED IN CONNECTION WITH ADVANCED WARNING AND ON-PROJECT CONSTRUCTION SIGNS AND BARRICADES. THE SIGNS SHOWN IN E-101 AND E-102 REPRESENT A SAMPLE OF THOSE MORE COMMONLY USED.

LOCATION

THE SIGNS SHALL BE LOCATED AS DETAILED ON THIS SHEET OR AS OTHERWISE SHOWN ON THE PLANS. THEY SHALL APPEAR AT EACH END OF THE HIGHWAY UNDER CONSTRUCTION AND ON ALL INTERSECTING PUBLIC HIGHWAYS. THE ENGINEER SHALL DETERMINE THE EXACT LOCATIONS.

DESIGN

LETTERS, DIGITS, ARROWS, SPACING AND TEXT DIMENSIONS SHALL CONFORM WITH THE "STANDARD HIGHWAY SIGNS BOOK" AND DESIGNS PRESCRIBED IN THE MANUAL ON UNIFORM TRAFFIC CONTROL DEVICES (MUTCD) ADOPTED BY THE U.S. DEPARTMENT OF TRANSPORTATION, FEDERAL HIGHWAY ADMINISTRATION (FHWA).

MATERIALS

THE SIGN BASE MATERIAL USED FOR THE SIGNS ON THIS SHEET MAY BE ANY OF THE FOLLOWING, WITH MINIMUM THICKNESS AS NOTED.

FLAT SHEET ALUMINUM	0.125 INCHES
HIGH DENSITY OVERLAYED PLYWOOD	5/8 INCHES

REFLECTORIZATION

ALL LEAD SIGNS (W20-1) ON THIS SHEET SHALL BE ASTM TYPE VIII FLUORESCENT ORANGE SHEETING. ALL OTHER SIGNS ON THIS SHEET SHALL BE ASTM TYPE III RETROREFLECTORIZED SHEETING.

COLORS

THE COLORS SHALL CONFORM WITH THE STANDARD COLORS ADOPTED BY AASHTO AND APPROVED BY THE FHWA. COLORS SHOWN ON THIS SHEET CONSIST OF BLACK TEXT AND BORDER ON A RETROREFLECTORIZED ASTM TYPE III OR TYPE VIII ORANGE BACKGROUND.

INSTALLATION

THE SIGNS SHALL BE ERECTED BEFORE THE START OF ANY WORK AND SHALL BE COVERED UNTIL WORK COMMENCES, DURING PERIODS OF INACTIVITY, OR UPON COMPLETION OF THE WORK. EACH SIGN SHALL BE ERECTED IN A NEAT AND WORKMANLIKE MANNER ON POSTS SET SECURELY IN THE GROUND. THE BOTTOM OF A SIGN SHALL BE AT LEAST 7 FEET ABOVE THE EDGE OF PAVEMENT, AND THE NEAREST EDGE OF A SIGN SHALL BE AT LEAST 6 FEET OUTSIDE THE SHOULDER POINT, 4 FEET OUTSIDE GUARD RAIL, OR 2 FEET OUTSIDE CURBING, OR SIDEWALK. THE INSTALLATION OF SIGNS SHALL BE SUBJECT TO APPROVAL OF THE ENGINEER, IN URBAN AREAS, THE BOTTOM OF THE SIGN SHALL BE AT LEAST 7 FEET ABOVE THE SIDEWALK. SIGNS MAY BE REMOVED UPON COMPLETION OF THE WORK AT THE DISCRETION OF THE ENGINEER.

NOTES CONT.

MAINTENANCE

SIGNS SHALL BE MAINTAINED IN A CLEAN AND LEGIBLE CONDITION SATISFACTORY TO THE ENGINEER. THEY SHALL BE COMPLETELY VISIBLE TO APPROACHING TRAFFIC AT ALL TIMES. THEY SHALL BE KEPT PLUMB AND LEVEL, AND ALWAYS PRESENT A NEAT APPEARANCE. DAMAGED, DEFACED, OR DIRTY SIGNS SHALL BE REPAIRED, CLEANED OR REPLACED AS ORDERED BY THE ENGINEER.

GENERAL

THE COST OF FURNISHING, INSTALLING, MAINTAINING AND REMOVING ALL CONSTRUCTION APPROACH SIGNS WILL BE CONSIDERED INCIDENTAL WORK PERTAINING TO THE PROJECT AS A WHOLE AND SHALL BE INCLUDED IN THE CONTRACT UNIT PRICE BID FOR VARIOUS ITEMS INVOLVED IN THE CONTRACT. DURING ALL PHASES OF CONSTRUCTION THE REQUIREMENTS SET FORTH IN THE "MANUAL ON UNIFORM TRAFFIC CONTROL DEVICES" SHALL BE MET.

SIGN COVERS

SIGN COVERS SHALL CONSIST OF A PANEL PAINTED FLAT BLACK, THE SAME SIZE AS THE SIGN IT COVERS. THE PANEL SHALL BE OF WOOD, PLYWOOD, HARDBOARD OR ANY MATERIAL SATISFACTORY TO THE ENGINEER. NO MATERIAL WILL BE APPROVED THAT WILL DETERIORATE BY EXPOSURE TO THE WEATHER DURING THE PROJECT. MOUNTING OF THE PANEL SHALL BE DONE IN SUCH A WAY AS NOT TO DAMAGE THE SIGN FACE MATERIAL.

CONTRACTORS SHALL COORDINATE THEIR SIGNING ACTIVITIES WITH OTHER CONTRACTORS WITHIN THE PROJECT LIMITS, AS DIRECTED BY THE REGIONAL CONSTRUCTION ENGINEER.

SIGN POSTS

WHERE CONSTRUCTION SIGN INSTALLATIONS ARE NOT PROTECTED BY GUARD RAIL OR OTHER APPROVED TRAFFIC BARRIERS, THE POSTS ON WHICH THE SIGNS ARE MOUNTED SHALL BE YIELDING METAL POSTS AS DESIGNATED IN THE E SERIES OF STANDARD DRAWINGS OR YIELDING WOODEN POSTS IN ACCORDANCE WITH THE FOLLOWING REQUIREMENTS:

WOODEN POSTS ARE ACCEPTABLE FOR USE WITH CONSTRUCTION SIGNS. THESE POSTS SHALL HAVE A UNIFORM CROSS-SECTION AND SHALL BE MADE FROM GRADE 2, AIR-DRIED SOUTHERN YELLOW PINE OR ANOTHER EQUIVALENT SOFTWOOD. AN ACCEPTABLE EQUIVALENT SOFTWOOD SHALL HAVE AN EXTREME FIBER IN BENDING "Fb" DESIGN VALUE NOT TO EXCEED 1400 psi AND HORIZONTAL SHEAR "Fv" DESIGN VALUE NOT TO EXCEED 90 psi SPECIFICATION; "DESIGN VALUES FOR WOOD CONSTRUCTION" AND RELATED SUPPLEMENT, LATEST EDITION.

AS ESTABLISHED BY THE NATIONAL FOREST PRODUCTS ASSOCIATION IN THEIR NATIONAL DESIGN. THE FOLLOWING ARE CONSIDERED TO BE ACCEPTABLE WOODEN POSTS:

1. 4" X 4" (ACTUAL DIMENSIONS ARE S4S 3.5" X 3.5")
   A) ACCEPTABLE FOR SINGLE OR DUAL POSTS INSTALLATION WITH NO MODIFICATIONS.

ALL WOODEN POSTS SHALL HAVE AN EMBEDMENT DEPTH OF 4 FEET.
NO CROSS-BRACING OR BACK-BRACING TO KEEP THE POSTS PLUMB WILL BE ALLOWED.
CONCRETE FOUNDATIONS, COLLARS, OR SOIL BEARING PLATES ARE NOT PERMITTED.
CONSTRUCTION SIGNS SHALL BE PLACED ON TWO OR MORE POSTS WHEN ANY OF THE FOLLOWING CONDITIONS GOVERN:

A) THE SIGN WIDTH (HORIZONTAL DIMENSIONS FOR DIAMOND SHAPED SIGNS) EXCEEDS 3 1/2 FEET.
B) THE EXPOSED SIGN AREA OF ANY SINGLE SIGN OR ASSEMBLY EXCEEDS 7 SQ. FEET.
C) THE Sv OF A SINGLE POST IS 64.

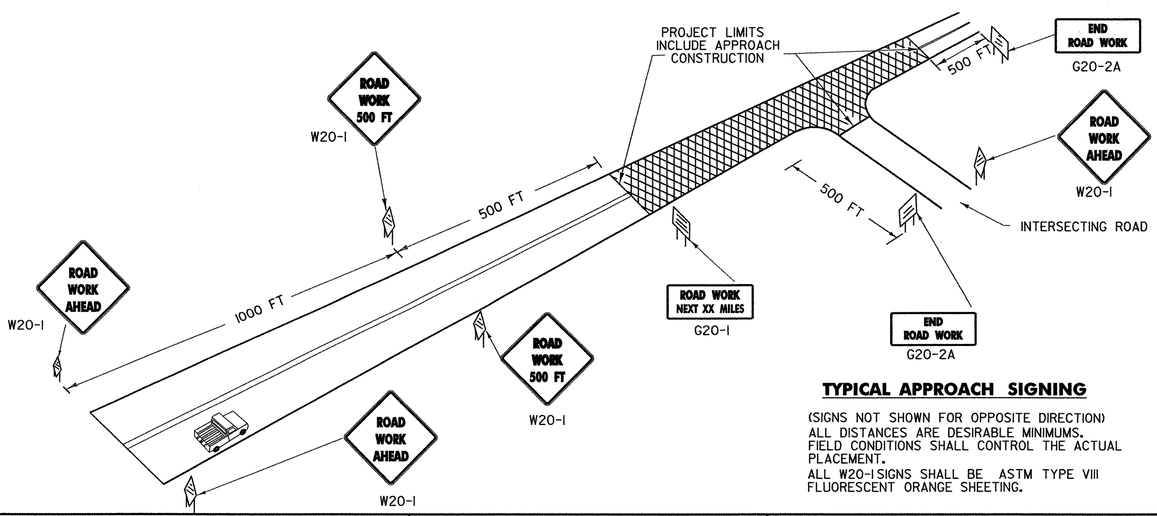

TYPICAL APPROACH SIGNING

(SIGNS NOT SHOWN FOR OPPOSITE DIRECTION)
ALL DISTANCES ARE DESIRABLE MINIMUMS. FIELD CONDITIONS SHALL CONTROL THE ACTUAL PLACEMENT.
ALL W20-1 SIGNS SHALL BE ASTM TYPE VIII FLUORESCENT ORANGE SHEETING.

OTHER STDS. REQUIRED: E-100A, E-101, E-102

REVISIONS AND CORRECTIONS

MAY 26, 1989 - DATE OF ORIGINAL ISSUE
OCT 21, 1992 - REVISED WOOD POST REQUIREMENTS, ADDED SIGN DETAILS, & REVISED TITLE BLOCK
AUG. 08, 1995 - MINOR NOTE REVISIONS
JAN. 06, 1997 - MINOR NOTE AND DIMENSION REVISIONS
JAN. 2, 2004 - CHANGED REFLECTIVE SHEETING TO ASTM TYPE III OR TYPE VIII

APPROVED

DIRECTOR OF PROGRAM DEVELOPMENT

TRAFFIC OPERATIONS ENGINEER

FEDERAL HIGHWAY ADMINISTRATION

CONSTRUCTION APPROACH SIGNS

VERMONT AGENCY OF TRANSPORTATION

STANDARD
E-100

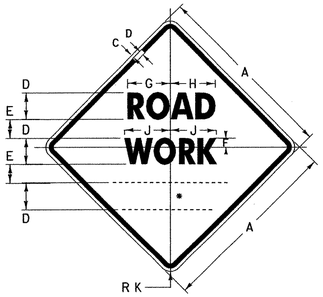

W20-1

• SEE DISTANCE DETAILS

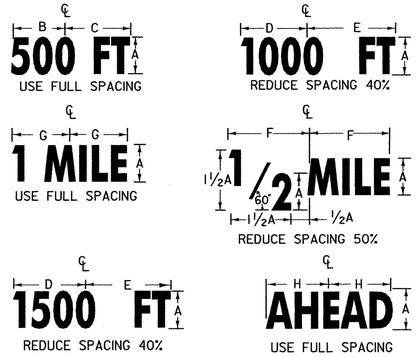

DISTANCE DETAILS

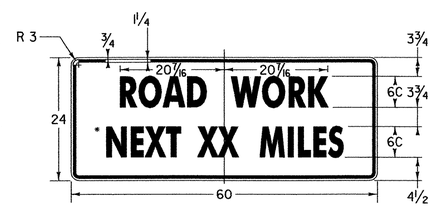

G20-1

• OPTICALLY CENTER

THIS SIGN TO BE USED WHEN PROJECT LENGTH EXCEEDS 2 MILES OR AS REQUESTED BY THE RESIDENT ENGINEER. SHOW MILEAGE TO NEAREST 1/4 MILE USING FRACTIONS, NOT DECIMALS. HAND LETTERING OF MILEAGE WILL NOT BE ALLOWED.

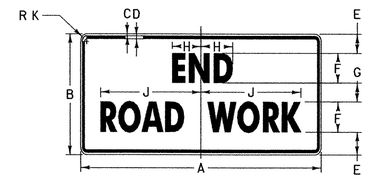

G20-2A

SIGN	DIMENSIONS (INCHES)									
	A	B	C	D	E	F	G	H	J	K
MIN.	36	18	5/8	7/8	3 3/4	4C	2 1/2	4	12 5/8	2 1/4
STD.	48	24	3/4	1 1/4	4 1/8	6C	3 3/4	5 7/8	22	3

SIGN	DIMENSIONS (INCHES)							
	A	B	C	D	E	F	G	K
MIN.	36	5/8	7/8	5D	3 1/2	3 1/4	8 3/8	8 7/8	9	2 1/4
STD.	48	3/4	1 1/4	7D	4 3/4	4 1/2	11 11/16	12 7/16	12 5/8	3

DIMENSIONS (INCHES)							
A	B	C	D	E	F	G	H
5D	10 3/16	10 3/16	11 5/8	11 1/4	11 1/4	9 1/2	10 7/8
7D	14 1/4	15 1/8	14 7/8	15 3/4	15 3/4	13 1/16	15 1/2

(ALL DIMENSIONS SHOWN IN INCHES)

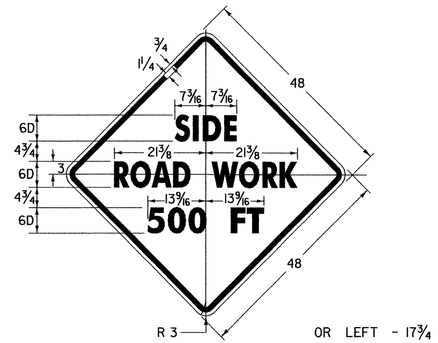

VC-839

OR LEFT - 17 3/4
RIGHT - 22
500 - 14 3/4
FT - 8 1/16

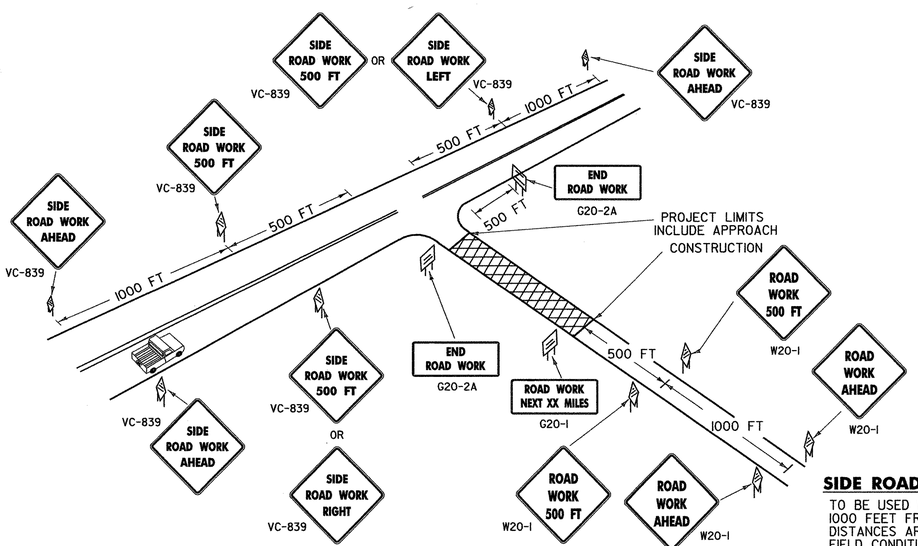

SIDE ROAD APPROACH SIGNING

TO BE USED WHEN CONSTRUCTION IS UP TO 1000 FEET FROM THE INTERSECTION. ALL DISTANCES ARE DESIREABLE MINIMUMS. FIELD CONDITIONS SHALL CONTROL THE ACTUAL PLACEMENT.

ALL W20-1 AND VC-839 SIGNS SHALL BE ASTM TYPE VIII FLUORESCENT ORANGE SHEETING.

NOTES

THE SIGNS SHOWN ON THIS SHEET ARE INTENDED FOR USE IN PROVIDING ADVANCE WARNING AND INFORMATION ON CONSTRUCTION PROJECTS OVER WHICH TRAFFIC WILL BE MAINTAINED. WHEN ADDITIONAL APPROACH SIGNS OR OTHER TYPES OF ADVANCE SIGNING OR CONTROL ARE NECESSARY, THE PLANS AND\OR THE SPECIFICATIONS FOR THAT PROJECT WILL GIVE THE DETAILS OF THE SIGNS AND DEVICES REQUIRED. FOR ON-PROJECT CONSTRUCTION SIGNS, REFER TO APPROPRIATE STANDARD SHEETS.

APPLICATION OF STANDARDS

SINCE IT IS NOT POSSIBLE TO PRESCRIBE DETAILED STANDARDS OF APPLICATION FOR ALL OF THE SITUATIONS THAT MAY CONCEIVABLY ARISE ON A CONSTRUCTION PROJECT, REFERENCE SHALL BE MADE TO THE "MANUAL ON UNIFORM TRAFFIC CONTROL DEVICES" FOR THE PRINCIPLES, PROCEDURES, AND STANDARDS THAT WILL BE REQUIRED IN CONNECTION WITH ADVANCED WARNING AND ON-PROJECT CONSTRUCTION SIGNS AND BARRICADES. THE SIGNS SHOWN IN E-101 AND E-102 REPRESENT A SAMPLE OF THOSE MORE COMMONLY USED.

LOCATION

THE SIGNS SHALL BE LOCATED AS DETAILED ON THIS SHEET OR AS OTHERWISE SHOWN ON THE PLANS. THEY SHALL APPEAR AT EACH END OF THE HIGHWAY UNDER CONSTRUCTION AND ON ALL INTERSECTING PUBLIC HIGHWAYS. THE ENGINEER SHALL DETERMINE THE EXACT LOCATIONS.

DESIGN

LETTERS, DIGITS, ARROWS SPACING AND TEXT DIMENSIONS SHALL CONFORM WITH THE "STANDARD HIGHWAY SIGNS BOOK" AND DESIGNS PRESCRIBED IN THE MANUAL ON UNIFORM TRAFIC CONTROL DEVICES (MUTCD) ADOPTED BY THE U.S. DEPARTMENT OF TRANSPORTATION, FEDERAL HIGHWAY ADMINISTRATION (FHWA).

NOTES CONT.

MATERIALS

THE SIGN BASE MATERIAL USED FOR THE SIGNS ON THIS SHEET MAY BE ANY OF THE FOLLOWING, WITH MINIMUM THICKNESS AS NOTED.

FLAT SHEET ALUMINUM	0.125 INCHES
HIGH DENSITY OVERLAYED PLYWOOD	5/8 INCHES

REFLECTORIZATION

ALL LEAD SIGNS (W20-1, VC-839) ON THIS SHEET SHALL BE ASTM TYPE VIII FLUORESCENT ORANGE SHEETING. ALL OTHER SIGNS ON THIS SHEET SHALL BE ASTM TYPE III RETROREFLECTORIZED SHEETING.

COLORS

THE COLORS SHALL CONFORM WITH THE STANDARD COLORS ADOPTED BY AASHTO AND APPROVED BY THE FHWA. COLORS SHOWN ON THIS SHEET CONSIST OF BLACK TEXT AND BORDER ON A RETROREFLECTORIZED ASTM TYPE III OR TYPE VIII ORANGE BACKGROUND.

INSTALLATION

THE SIGNS SHALL BE ERECTED BEFORE THE START OF ANY WORK AND SHALL BE COVERED UNTIL WORK COMMENCES, DURING PERIODS OF INACTIVITY, OR UPON COMPLETION OF THE WORK. EACH SIGN SHALL BE ERECTED IN A NEAT AND WORKMANLIKE MANNER ON POSTS SET SECURELY IN THE GROUND. THE BOTTOM OF A SIGN SHALL BE AT LEAST 7 FEET ABOVE THE EDGE OF PAVEMENT, AND THE NEAREST EDGE OF A SIGN SHALL BE AT LEAST 6 FEET OUTSIDE THE SHOULDER POINT, 4 FEET OUTSIDE GUARD RAIL, OR 2 FEET OUTSIDE CURBING, OR SIDEWALK. THE INSTALLATION OF SIGNS SHALL BE SUBJECT TO APPROVAL OF THE ENGINEER, IN URBAN AREAS, THE BOTTOM OF THE SIGN SHALL BE AT LEAST 7 FEET ABOVE THE SIDEWALK. SIGNS MAY BE REMOVED UPON COMPLETION OF THE WORK AT THE DISCRETION OF THE ENGINEER.

MAINTENANCE

SIGNS SHALL BE MAINTAINED IN A CLEAN AND LEGIBLE CONDITION SATISFACTORY TO THE ENGINEER. THEY SHALL BE COMPLETELY VISIBLE TO APPROACHING TRAFFIC AT ALL TIMES. THEY SHALL BE KEPT PLUMB AND LEVEL, AND ALWAYS PRESENT A NEAT APPEARANCE. DAMAGED, DEFACED, OR DIRTY SIGNS SHALL BE REPAIRED, CLEANED OR REPLACED AS ORDERED BY THE ENGINEER.

GENERAL

THE COST OF FURNISHING, INSTALLING, MAINTAINING AND REMOVING ALL CONSTRUCTION APPROACH SIGNS WILL BE CONSIDERED INCIDENTAL WORK PERTAINING TO THE PROJECT AS A WHOLE AND SHALL BE INCLUDED IN THE CONTRACT UNIT PRICE BID FOR VARIOUS ITEMS INVOLVED IN THE CONTRACT. DURING ALL PHASES OF CONSTRUCTION THE REQUIREMENTS SET FORTH IN THE "MANUAL ON UNIFORM TRAFFIC CONTROL DEVICES" SHALL BE MET.

SIGN COVERS

SIGN COVERS SHALL CONSIST OF A PANEL PAINTED FLAT BLACK, THE SAME SIZE AS THE SIGN IT COVERS. THE PANEL SHALL BE OF WOOD, PLYWOOD, HARDBOARD OR ANY MATERIAL SATISFACTORY TO THE ENGINEER. NO MATERIAL WILL BE APPROVED THAT WILL DETERIORATE BY EXPOSURE TO THE WEATHER DURING THE PROJECT. MOUNTING OF THE PANEL SHALL BE DONE IN SUCH A WAY AS NOT TO DAMAGE THE SIGN FACE MATERIAL.

CONTRACTORS SHALL COORDINATE THEIR SIGNING ACTIVITIES WITH OTHER CONTRACTORS WITHIN THE PROJECT LIMITS, AS DIRECTED BY THE REGIONAL CONSTRUCTION ENGINEER.

SIGN POSTS

WHERE CONSTRUCTION SIGN INSTALLATIONS ARE NOT PROTECTED BY GUARD RAIL OR OTHER APPROVED TRAFFIC BARRIERS, THE POSTS ON WHICH THE SIGNS ARE MOUNTED SHALL BE YIELDING METAL POSTS AS DESIGNATED IN THE E SERIES OF STANDARD DRAWINGS OR YIELDING WOODEN POSTS IN ACCORDANCE WITH THE FOLLOWING REQUIREMENTS:

WOODEN POSTS ARE ACCEPTABLE FOR USE WITH CONSTRUCTION SIGNS. THESE POSTS SHALL HAVE A UNIFORM CROSS-SECTION AND SHALL BE MADE FROM GRADE 2, AIR-DRIED SOUTHERN YELLOW PINE OR ANOTHER EQUIVELENT SOFTWOOD. AN ACCEPTABLE EQUIVELENT SOFTWOOD SHALL HAVE AN EXTREME FIBER IN BENDING "Fb" DESIGN VALUE NOT TO EXCEED 1400 psi AND HORIZONTAL SHEAR "Fv" DESIGN VALUE NOT TO EXCEED 90 psi SPECIFICATION; "DESIGN VALUES FOR WOOD CONSTRUCTION" AND RELATED SUPPLEMENT, LATEST EDITION.

AS ESTABLISHED BY THE NATIONAL FOREST PRODUCTS ASSOCIATION IN THEIR NATIONAL DESIGN THE FOLLOWING ARE CONSIDERED TO BE ACCEPTABLE WOODEN POSTS:

I. 4" X 4" (ACTUAL DIMENSIONS ARE S4S 3.5" X 3.5")

A) ACCEPTABLE FOR SINGLE OR DUAL POSTS INSTALLATION WITH NO MODIFICATIONS.

ALL WOODEN POSTS SHALL HAVE AN EMBEDMENT DEPTH OF 4 FEET.
NO CROSS-BRACING OR BACK-BRACING TO KEEP THE POSTS PLUMB WILL BE ALLOWED.
CONCRETE FOUNDATIONS COLLARS OR SOIL BEARING PLATES ARE NOT PERMITTED.
CONSTRUCTION SIGNS SHALL BE PLACED ON TWO OR MORE POSTS WHEN ANY OF THE FOLLOWING CONDITIONS GOVERN:

A) THE SIGN WIDTH (HORIZONTAL DIMENSIONS FOR DIAMOND SHAPED SIGNS) EXCEEDS 3 1/2 FEET.
B) THE EXPOSED SIGN AREA OF ANY SINGLE SIGN OR ASSEMBLY EXCEEDS 7 SQ. FEET.
C) THE Sv OF A SINGLE POST IS 64

OTHER STDS. REQUIRED: E-100, E-101, E-102

REVISIONS AND CORRECTIONS

JAN. 06, 1997 - DATE OF ORIGINAL ISSUE
JAN. 2, 2004 - CHANGED REFLECTIVE SHEETING TO ASTM TYPE III OR TYPE VIII

APPROVED

DIRECTOR OF PROGRAM DEVELOPMENT

TRAFFIC OPERATIONS ENGINEER

FEDERAL HIGHWAY ADMINISTRATION

SIDE ROAD CONSTRUCTION APPROACH SIGNS

VERMONT AGENCY OF TRANSPORTATION

STANDARD

E-100A

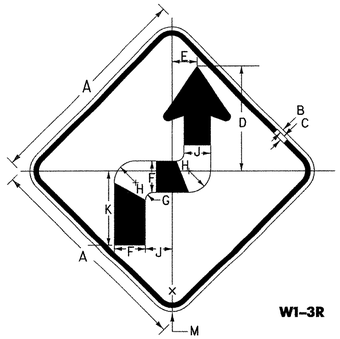

W1-3R

SIGN	DIMENSIONS (INCHES)											
	A	B	C	D	E	F	G	H	J	K	L	M
STD. & MIN.	36	5/8	7/8	17 7/16	4 7/32	5 1/4	1 1/4	3 5/8	4 1/2	12 15/32	1 31/32	2 1/4
SPECIAL	48	3/4	1 1/4	23 3/16	5 5/8	7	1 5/8	4 7/8	6	16 5/8	2 3/16	3

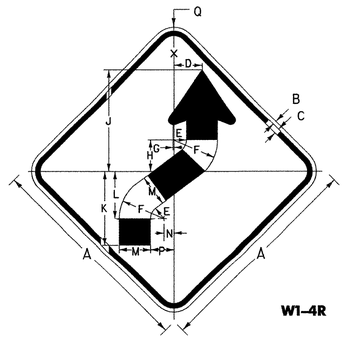

W1-4R

SIGN	DIMENSIONS (INCHES)														
	A	B	C	D	E	F	G	H	J	K	L	M	N	P	Q
STD. MIN.	36	5/8	7/8	4 29/32	2 1/4	7 1/2	5/32	5 1/4	16 7/8	12 3/8	7 7/8	5 1/4	1 11/16	3 15/16	2 1/4
SPECIAL	48	3/4	1 1/4	6 5/16	3	10	3/16	7	22 1/2	16 1/2	10 1/2	7	2 1/4	5 1/4	3

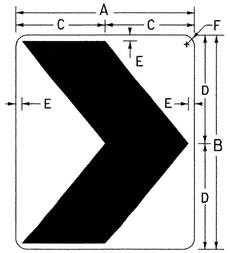

W1-8

SIGN	DIMENSIONS(INCHES)					
	A	B	C	D	E	F
STD.	18	24	9	12	3/4	1 1/2
SPECIAL	24	30	12	15	7/8	1 1/2
EXPWY.	30	36	15	18	1	1 7/8
FRWY.	36	48	18	24	1 1/8	2 1/4

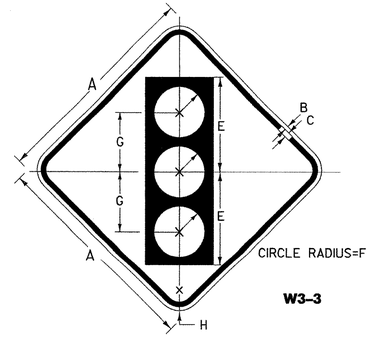

W3-3

SIGN	DIMENSIONS (INCHES)							
	A	B	C	D	E	F	G	H
STD. & MIN.	36	5/8	7/8	5 3/4	15 3/4	4 1/4	10	2 1/4
SPECIAL	48	3/4	1 1/4	7 1/2	20	5	12 1/2	3

COLORS

SYMBOL & LEGEND - BLACK (NON-REFL)
BACKGROUND - ORANGE (REFL)

TOP CIRCLE RED (REFL)
MIDDLE CIRCLE YELLOW (REFL)
BOTTOM CIRCLE GREEN (REFL)

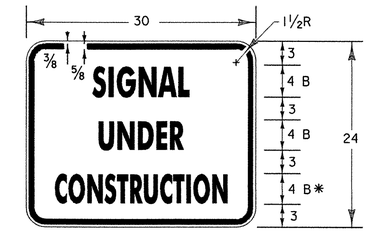

* REDUCE SPACING 50%

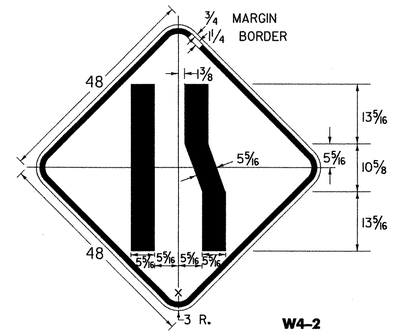

W4-2

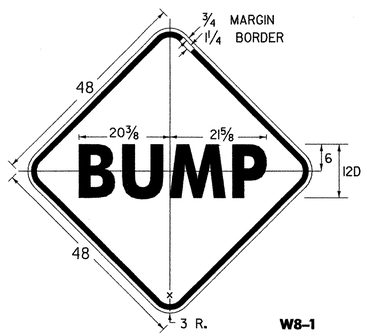

W8-1

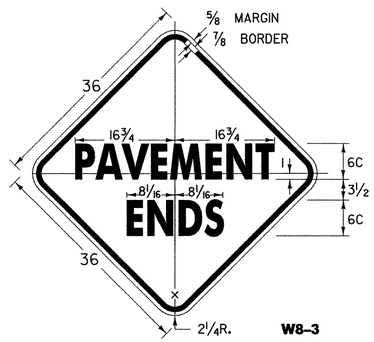

W8-3

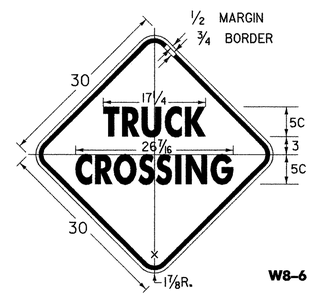

W8-6

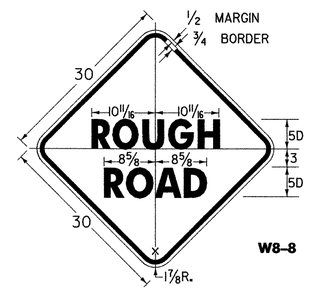

W8-8

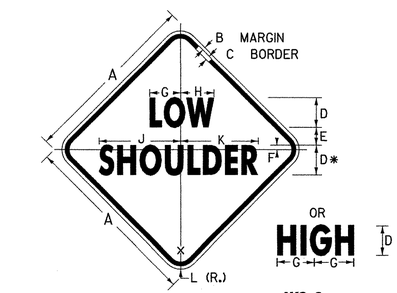

W8-9

* REDUCE SPACING 25%

SIGN	DIMENSIONS(INCHES)										
	A	B	C	D	E	F	G	H	J	K	L
STD.	30	1/2	3/4	5C	3	3/4	5 3/16	5 5/8	13 11/16	13 1/16	1 7/8
FWY.	48	3/4	1 1/4	8C	5	1 1/4	8 1/4	9	21 7/8	20 7/8	3

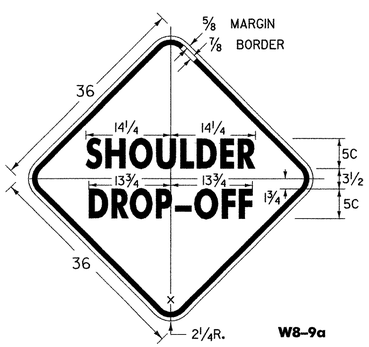

W8-9a

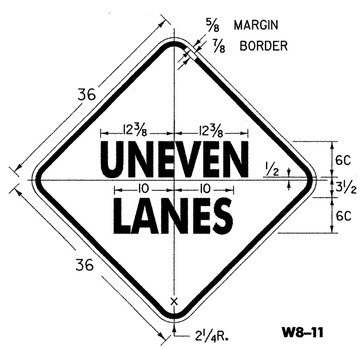

W8-11

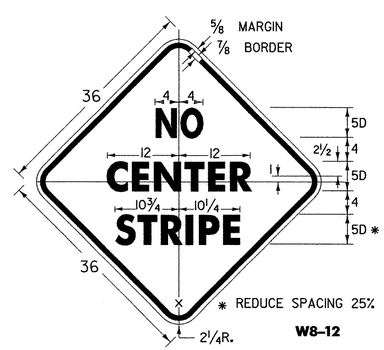

* REDUCE SPACING 25%

W8-12

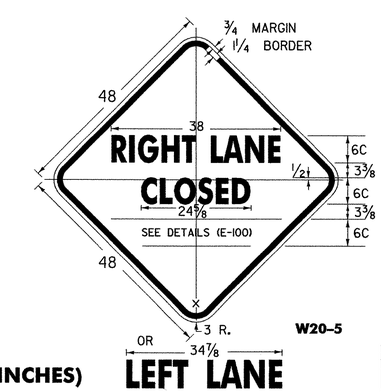

W20-5

(ALL DIMENSIONS SHOWN IN INCHES)

NOTES

SEE STANDARD SHEET E-100 FOR NOTES AND TEXT DETAILS

COLORS FOR SIGNS SHOWN ON THIS SHEET SHALL BE BLACK TEXT, BORDER AND SYMBOLS ON ASTM TYPE III OR TYPE VI RETROREFLECTORIZED ORANGE BACKGROUND, UNLESS OTHERWISE NOTED.

OTHER STDS. REQUIRED: E-100

REVISIONS AND CORRECTIONS

OCT. 30, 1987 - DATE OF ORIGINAL ISSUE
OCT. 21, 1992 - ADDED ADDITIONAL SIGN DIMENSIONS, REVISED CHEVRON BACKROUND TO ORANGE, & REVISED TITLE BLOCK
AUG. 08, 1995 - ADDED AND DELETED VARIOUS SIGN DETAILS
MAR., 10 1997 - REVISED SIGN DETAILS
MAY 30, 2003 - CHANGED REFLECTIVE SHEETING TO ASTM TYPE III OR TYPE VI

APPROVED

DIRECTOR OF PROGRAM DEVELOPMENT

TRAFFIC OPERATIONS ENGINEER

FEDERAL HIGHWAY ADMINISTRATION

CONSTRUCTION SIGN DETAILS

VERMONT AGENCY OF TRANSPORTATION

STANDARD

E-101

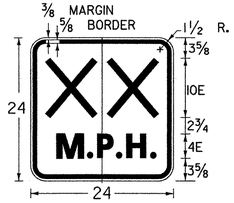

"XX" DENOTES ADVISORY SPEED AS SHOWN ON THE PLANS

W13-1

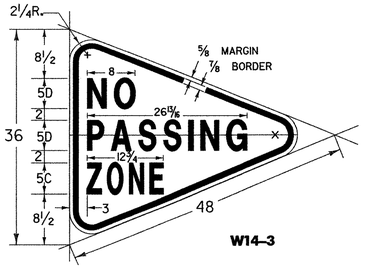

W14-3

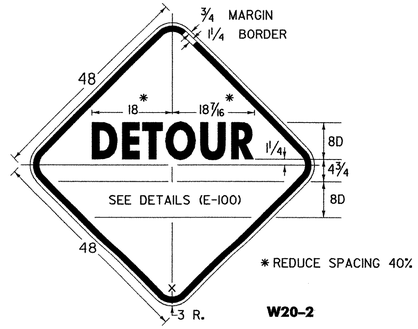

* REDUCE SPACING 40%

W20-2

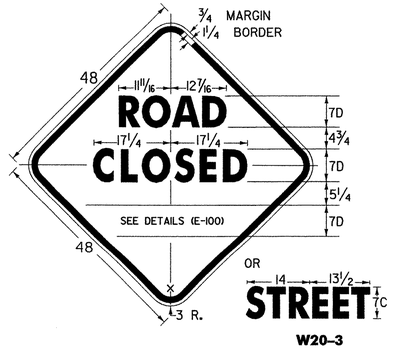

W20-3

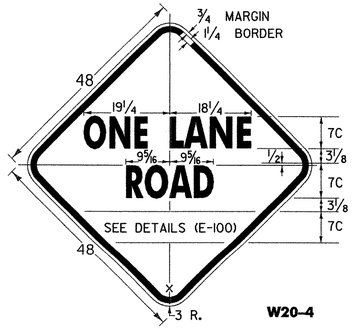

W20-4

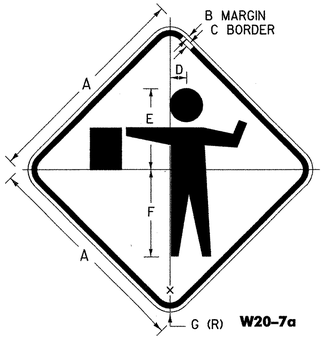

W20-7a

SIGN	DIMENSIONS(INCHES)						
	A	B	C	D	E	F	G
STD.	36	5/8	7/8	2 3/4	13 1/2	14 5/8	2 1/4
FWY.	48	3/4	1 1/4	3 3/4	18	19 1/2	3

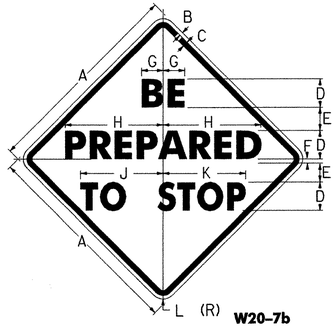

W20-7b

COLORS:
BLACK BORDER AND TEXT (NON RETRORFL.)
ORANGE BACKROUND (RETRORFL.)

W3-4

COLORS:
BLACK BORDER AND TEXT (NON RETRORFL.)
YELLOW BACKROUND (RETRORFL.)

SIGN	DIMENSIONS (INCHES)										
	A	B	C	D	E	F	G	H	J	K	L
MIN.	36	5/8	7/8	6C	3 5/8	7/8	3 3/4	16 3/8	13	13 7/8	2 1/4
STD.	48	3/4	1 1/4	8C	4 7/8	1 1/4	5	21 7/8	17 3/8	18 1/2	3
EXPWY.	60	3/4	1 1/4	9C	5 3/8	1 7/8	5 5/8	24 3/4	19 3/8	20 1/4	3

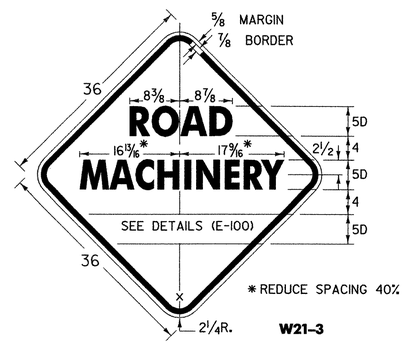

* REDUCE SPACING 40%

W21-3

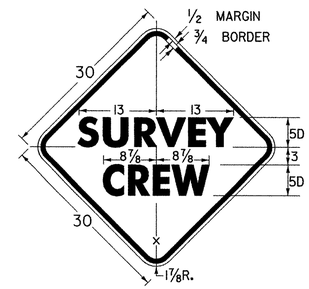

W21-6

SIGN PADDLE FOR FLAGPERSON

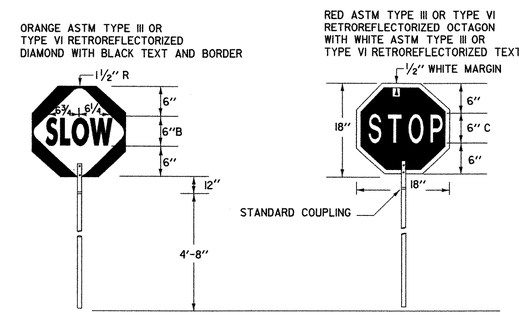

SIGN DETAIL

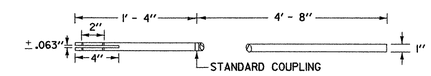

STAFF DETAIL

MATERIALS
THE SIGN MATERIALS SHALL BE 0.063" ALUMINUM WITH COLORS AS INDICATED ON DETAILS.
THE STAFF SHALL BE 3/4" TO 1 1/4" DIAMETER RIGID ALUMINUM CONDUIT/TUBING WITH A WALL THICKNESS OF 0.125", OR 1" TO 1 1/2" DIAMETER RIGID PVC CONDUIT/TUBING WITH 0.125" WALL THICKNESS

MOUNTING
THE STAFF SHALL BE MOUNTED WITH EITHER TWO 1/4" DIAMETER ALUMINUM BOLTS OR TWO 1/4" DIAMETER ALUMINUM RIVETS.

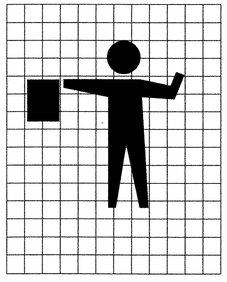

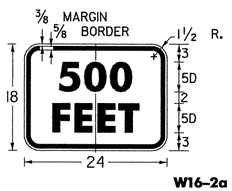

W16-2a

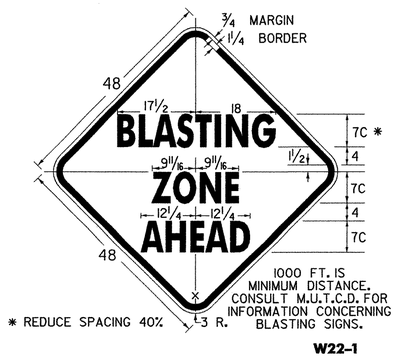

* REDUCE SPACING 40%

1000 FT. IS MINIMUM DISTANCE. CONSULT M.U.T.C.D. FOR INFORMATION CONCERNING BLASTING SIGNS.

W22-1

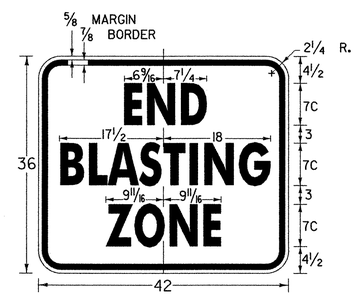

W22-3

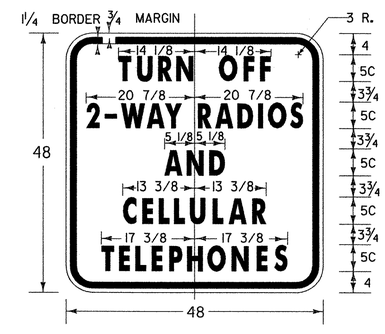

VW22-1

NOTES

SEE STANDARD SHEET E-100 FOR NOTES AND TEXT DETAILS
COLORS FOR SIGNS SHOWN ON THIS SHEET SHALL BE BLACK TEXT, BORDER AND SYMBOLS ON ASTM TYPE III OR TYPE VI RETROREFLECTORIZED ORANGE BACKGROUND, UNLESS OTHERWISE NOTED
SIGN DETAILS INDICATE THE APPROPRIATE COLOR.

OTHER STDS. REQUIRED: E-100

NOTE: ALL DIMENSIONS SHOWN IN INCHES EXCEPT WHERE NOTED

REVISIONS AND CORRECTIONS

OCT. 30, 1987 - DATE OF ORIGINAL ISSUE
JAN. 23, 1989 - DELETE MOTORCYCLE SYMBOL SIGN AND SPEED SIGN, ADDED TWO SIGNS
OCT. 21, 1992 - ADDED A SIGN, REVISED A SIGN DIMENSION & TYPE ERROR & REVISED TITLE BLOCK
AUG. 08, 1995 - ADDED FLAGGER GRID
JUNE 30, 2003 - CHANGED REFLECTIVE SHEETING TO ASTM TYPE III OR TYPE VI CHANGED TEXT ON W20-7b SIGN

APPROVED

DIRECTOR OF PROGRAM DEVELOPMENT

TRAFFIC OPERATIONS ENGINEER

FEDERAL HIGHWAY ADMINISTRATION

CONSTRUCTION SIGN DETAILS

VERMONT AGENCY OF TRANSPORTATION

STANDARD

E-102

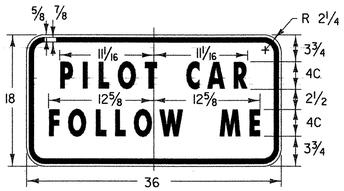

G20-4

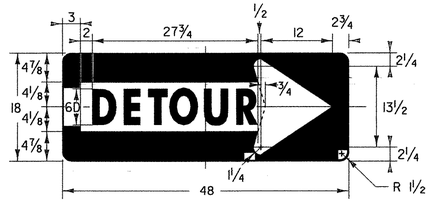

M4-10(R)

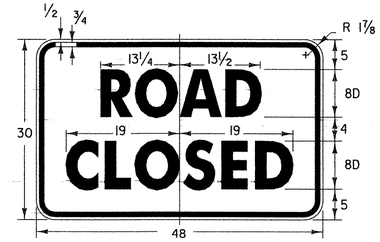

R11-2

COLORS:
BLACK TEXT AND BORDER
WHITE RETROREFLECTORIZED BACKGROUND

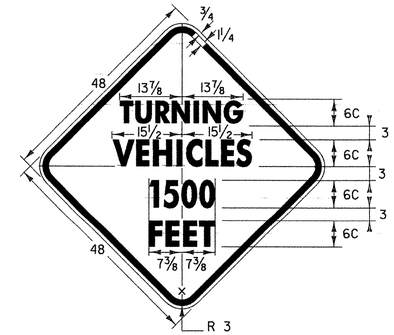

VC-001

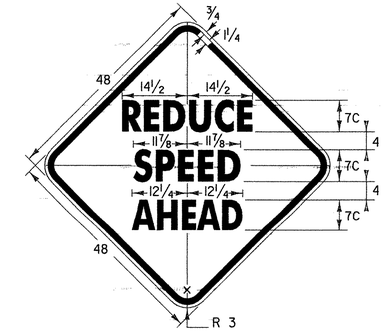

VC-002

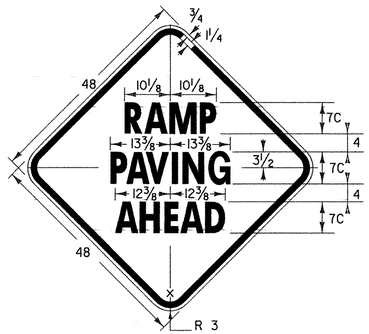

VC-003

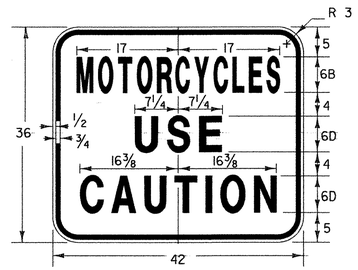

VC-004

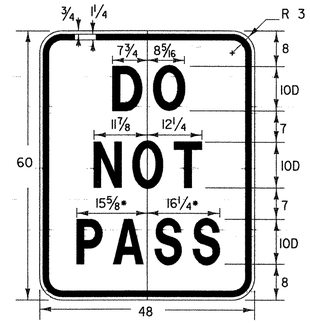

VC-005

• REDUCE SPACING BY 40%

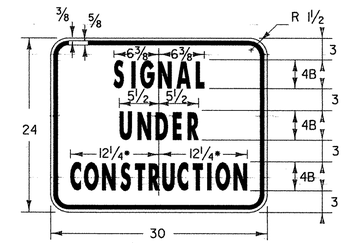

VC-820

• REDUCE SPACING 25%

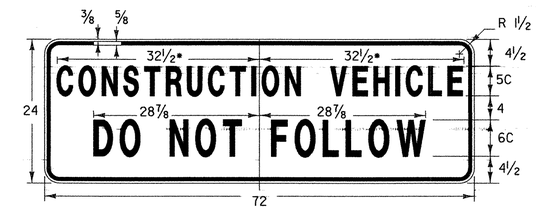

VC-007

• REDUCE SPACING 20%

IT IS SUGGESTED THAT THIS SIGN BE DESIGNED TO FOLD, (DOWN OR ACROSS), BE COVERED, OR BE REMOVED WHEN NOT IN USE. THE SIGN SHOULD ALSO BE MOUNTED AS TO NOT INTERFERE WITH THE VISIBILITY OF DIRECTIONAL OR TAIL LIGHTS AS REQUIRED BY LAW.

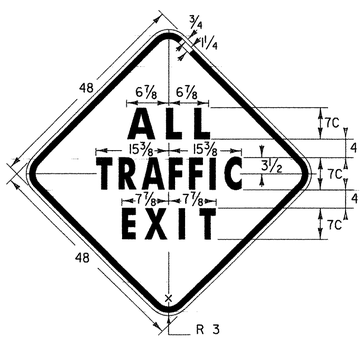

VC-008

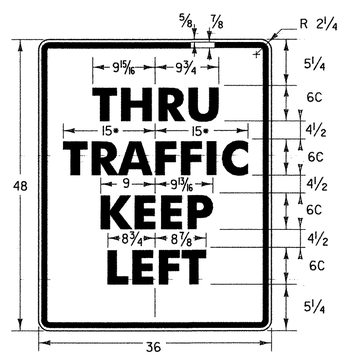

VR-118L

• REDUCE SPACING 25 %

COLORS:
BLACK TEXT AND BORDER
WHITE (RETROREFLECTORIZED) BACKGROUND

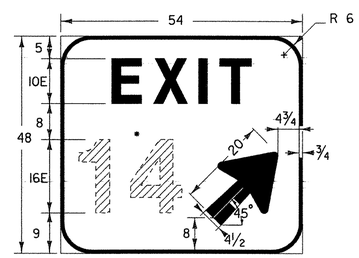

E5-1a

• EXIT NUMBER AS PER PLANS OPTICALLY SPACED

COLORS:
WHITE RETROREFLECTORIZED BORDER, ARROW AND LEGEND
GREEN RETROREFLECTORIZED BACKGROUND

(ALL DIMENSIONS SHOWN IN INCHES EXCEPT WHERE NOTED)

NOTES

SEE STANDARD SHEET E-100 FOR NOTES AND TEXT DETAILS

COLORS FOR SIGNS SHOWN ON THIS SHEET SHALL BE BLACK TEXT, BORDER AND SYMBOLS ON ASTM TYPE III OR TYPE VIII RETROREFLECTIVE ORANGE BACKGROUND, UNLESS OTHERWISE NOTED.

SIGN DETAILS INDICATE THE PROPER COLOR.

OTHER STDS. REQUIRED: E-100, E-151

REVISIONS AND CORRECTIONS

AUG 08, 1995 - DATE OF ORIGINAL ISSUE
MAY 01, 2004 - CHANGED REFLECTIVE SHEETING TO TYPE III

APPROVED

DIRECTOR OF PROGRAM DEVELOPMENT

TRAFFIC OPERATIONS ENGINEER

FEDERAL HIGHWAY ADMINISTRATION

CONSTRUCTION SIGN DETAILS

VERMONT AGENCY OF TRANSPORTATION

STANDARD
E-102A

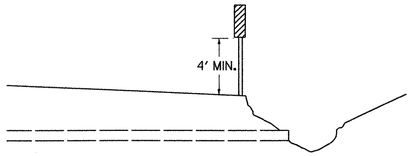

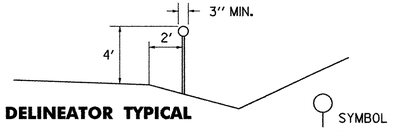

DELINEATOR TYPICAL

THE STANDARD COLOR FOR DELINEATORS USED ALONG BOTH SIDES OF TWO-WAY STREETS AND HIGHWAYS AND THE RIGHT SIDE OF ONE-WAY STREETS SHALL BE WHITE. DELINEATORS USED ALONG THE LEFT SIDE OF ONE-WAY ROADWAYS SHALL BE YELLOW THEY SHALL HAVE A MINIMUM AREA OF 7 SQUARE INCHES. THEY MAY BE ROUND, SQUARE OR OBLONG, FOR ALTERNATES SEE STD. E-198

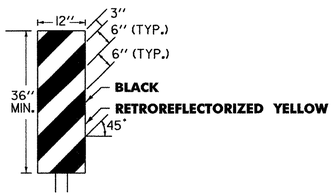

OBJECT MARKER TYPICAL

OBJECTS MARKERS ARE USED TO MARK OBSTRUCTIONS WITHIN OR ADJACENT TO THE ROADWAY. IN SOME CASES THERE MAY NOT BE A PHYSICAL OBJECT INVOLVED, BUT OTHER ROADSIDE CONDITIONS SUCH AS NARROW SHOULDER DROP-OFFS, GORES, D.I. EXCAVATIONS, AND ABRUPT CHANGES IN THE ROADWAY ALIGNMENT MAY MAKE IT UNDESIRABLE FOR A DRIVER TO LEAVE THE ROADWAY. THE INSIDE EDGE OF THE OBJECT MARKER SHALL BE IN LINE WITH THE INNER EDGE OF THE OBSTRUCTION, WHENEVER POSSIBLE.
OBJECT MARKERS SHALL HAVE ALTERNATING BLACK AND RETROREFLECTORIZED YELLOW STRIPES. (SLOPING DOWNWARD IN THE DIRECTION TRAFFIC IS TO PASS).

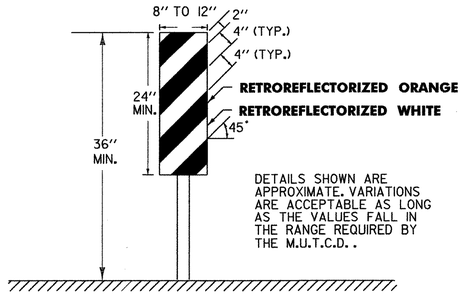

DETAILS SHOWN ARE APPROXIMATE. VARIATIONS ARE ACCEPTABLE AS LONG AS THE VALUES FALL IN THE RANGE REQUIRED BY THE M.U.T.C.D..

VERTICAL PANEL

VERTICAL PANELS SHALL HAVE ALTERNATING ORANGE AND WHITE RETROREFLECTORIZED STRIPES (SLOPING DOWNWARD IN THE DIRECTION TRAFFIC IS TO PASS). THESE DEVICES MAY BE USED FOR TRAFFIC SEPARATION, CHANNELIZING OR BARRICADING WHERE SPACE IS AT A MINIMUM.

DELINEATOR, VERTICAL PANEL AND OBJECT MARKER DETAILS FOR CONSTRUCTION AREAS WHERE TRAFFIC IS MAINTAINED

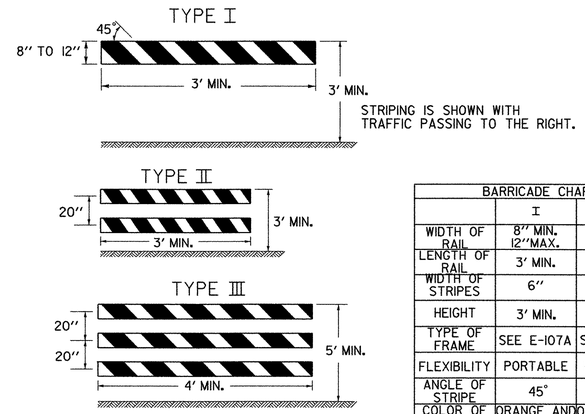

A TYPE III(MODIFIED) BARRICADE SHALL CONSIST OF TYPE II RAILS MOUNTED ON A BREAKAWAY BARRICADE AS SHOWN ON STANDARD SHEET E-107A.

BARRICADE CHARACTERISTICS			
	I	II	III
WIDTH OF RAIL	8" MIN. 12" MAX.	8" MIN. 12" MAX.	8" MIN. 12" MAX.
LENGTH OF RAIL	3' MIN.	3' MIN.	4' MIN.
WIDTH OF STRIPES	6"	6"	6"
HEIGHT	3' MIN.	3' MIN.	5' MIN.
TYPE OF FRAME	SEE E-107A	SEE E-107A	SEE E-107A
FLEXIBILITY	PORTABLE	PORTABLE	PORTABLE
ANGLE OF STRIPE	45°	45°	45°
COLOR OF STRIPES	ORANGE AND WHITE	ORANGE AND WHITE	ORANGE AND WHITE

BARRICADE CHARACTERISTICS

DETOUR DESIGN SPEED	MINIMUM RADIUS (FT.)[a] SUPERELEVATION (FT./FT.)				
(M.P.H.)	0.00[b]	0.02	0.04	0.06	0.08
20	160	140	130	120	110
25	245	220	200	185	170
30	375	335	305	275	255
35	510	455	410	375	340
40	715	630	575	510	470
50	1190	1045	955	850	765

a. PER AASHTO REQUIREMENTS
b. 0.00 SUPERELEVATION SHOULD BE AVOIDED IF POSSIBLE

BARRICADES

APPLICATION NOTES

TYPE I BARRICADES SHALL BE USED ON CONVENTIONAL ROADS OR URBAN STREETS AND ARTERIALS TO MARK A SPECIFIC HAZARD.

TYPE II BARRICADES SHALL BE USED ON EXPRESSWAYS AND FREEWAYS, SERVING THE SAME FUNCTIONS AS TYPE I BARRICADES.

TYPE III BARRICADES (SEE STD. E-107A) SHALL ONLY BE USED WHEN A ROAD SECTION OR LANE IS CLOSED TO TRAFFIC AND ARE TO BE ERECTED AT THE POINT OF CLOSURE.

MATERIALS

THE BARRICADES SHOWN ON THIS SHEET SHOULD BE OF LIGHTWEIGHT MATERIAL. IF WOOD IS USED THE FOLLOWING CONDITIONS SHALL APPLY:

1. WOODEN BARRICADES (TYPE I AND II)
   A) SHALL NOT BE USED TO CHANNELIZE OR DELINEATE WORK AREAS WITHIN THE CLEAR ZONE OF ANY HIGHWAY WHERE OPERATING SPEEDS IN EXCESS OF 20 M.P.H. ARE EXPECTED UNLESS INSTALLED FOR PEDESTRIAN CONTROL BEHIND APPROVED POSITIVE BARRIERS.
   B) MAY BE USED WHERE OPERATING SPEEDS OF 20 M.P.H. OR LESS ARE EXPECTED.
2. TYPE III WOODEN BARRICADES SHALL NOT BE USED.

COLORS

THE BARRICADE PANELS SHOWN ON THIS SHEET SHALL HAVE ALTERNATING RETRO-REFLECTORIZED WHITE AND ORANGE STRIPES. THE ORANGE SHALL CONFORM WITH THE STANDARD COLORS ADOPTED BY AMERICAN ASSOCIATION OF STATE HIGHWAY AND TRANSPORTATION OFFICALS AND APPROVED BY THE US DEPARTMENT OF TRANSPORTATION FEDERAL HIGHWAY ADMINISTRATION. THE BARRICADE COMPONENTS SHALL BE WHITE UNLESS UNPAINTED METAL OR ALUMINUM IS USED.

REFLECTORIZATION

THE RETROREFLECTIVE SHEETING ON BARRICADE PANELS SHALL BE ASTM TYPE III.

LOCATION

THE BARRICADES SHOWN ON THIS SHEET WILL BE LOCATED BY THE RESIDENT ENGINEER IN THE FIELD OR AS SHOWN ON THE PLANS. THE LOCATION OF THE BARRICADES SHALL FOLLOW THE PROCEDURES SET FORTH IN THE ''MANUAL ON UNIFORM TRAFFIC CONTROL DEVICES'', OR AS OTHERWISE NOTED.

MAINTENANCE

BARRICADES SHALL BE MAINTAINED IN CLEAN CONDITION, SATISFACTORY TO THE RESIDENT ENGINEER. THEY SHALL BE COMPLETELY VISIBLE TO THE APPROACHING TRAFFIC AT ALL TIMES. DAMAGED, DEFACED, OR DIRTY BARRICADES SHALL BE REPAIRED, CLEANED, OR REPLACED AS ORDERED BY THE RESIDENT ENGINEER.

ALL SIGN PLACEMENT DISTANCES ARE DESIRABLE SPECIFICATIONS. FIELD CONDITIONS SHALL CONTROL THE ACTUAL PLACEMENT. PROJECT CONSTRUCTION APPROACH SIGNING PLACEMENT SHALL TAKE INTO CONSIDERATION SPACING REQUIREMENTS FOR THE DETOUR SIGN LAYOUT REQUIREMENTS.

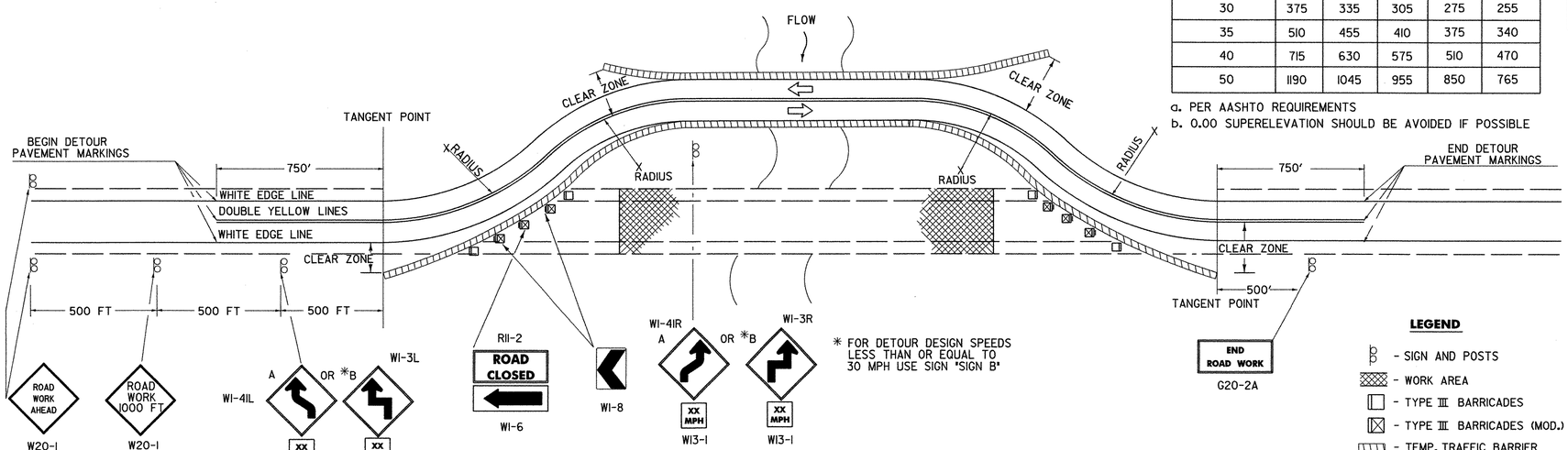

* FOR DETOUR DESIGN SPEEDS LESS THAN OR EQUAL TO 30 MPH USE SIGN "SIGN B"

LEGEND

- SIGN AND POSTS
- WORK AREA
- TYPE III BARRICADES
- TYPE III BARRICADES (MOD.)
- TEMP. TRAFFIC BARRIER
- INDICATES TRAFFIC DIRECTION

TRAFFIC CONTROL PLAN TWO LANE HIGHWAY PAVED DETOUR WITH TEMPORARY TRAFFIC BARRIER

DETOUR NOTES

1.) SIGNS AND DELINEATION SHOWN FOR ONE DIRECTION OF TRAFFIC ONLY.

2.) THE CONTRACTOR IS RESPONSIBLE FOR PAVEMENT MARKING AND SHALL REMOVE ANY CONFLICTING OR CONFUSING EXISTING MARKINGS.

3.) ADDITIONAL SIGNING MAY BE REQUIRED AT THE DISCRETION OF THE RESIDENT ENGINEER.

4.) UNPAVED DETOURS REQUIRE PAVEMENT MARKINGS FOR TRANSITIONS FROM EXISTING PAVEMENT.

5.) THE NUMBER OF CHANNELIZING DEVICES, BARRICADES AND OTHER TRAFFIC CONTROL DEVICES SHOWN ON THIS SHEET ARE FOR ILLUSTRATIVE PURPOSES ONLY. THE ACTUAL NUMBER REQUIRED SHALL BE DETERMINED BASED ON INDIVIDUAL DETOUR CONDITIONS (TAPERS, SPEED LIMITS, LENGTH OF DETOUR CURVE, ETC.).

6.) AASHTO CLEAR ZONE REQUIREMENTS SHOULD BE MET. IF NOT THEN AN APPROVED ENERGY ABSORPTION ATTENUATOR (SUITABLE FOR THE TEMPORARY TRAFFIC BARRIER USED AND FOR THE DESIGN SPEED) SHALL BE INSTALLED PER THE CURRENT AASHTO ROADSIDE DESIGN GUIDE.

7.) THE DETOUR DESIGN SPEED SHOULD BE NO LESS THAN 10 M.P.H. BELOW THE POSTED SPEED LIMIT, UNLESS PHYSICAL RESTRICTIONS PREVENT THIS.

8.) SEE STANDARD SHEETS E-100, E-101 AND E-102 FOR SIGN DETAIL AND MATERIAL REQUIREMENTS.

9.) IF THE USE OF TEMPORARY TRAFFIC BARRIER IS NOT REQUIRED, THEN REFLECTORIZED PLASTIC DRUMS SHALL BE USED.

OTHER STDS. REQUIRED: E-100, E-101, E-102, E-102a, E-107a, E-198

REVISIONS AND CORRECTIONS

SEPT. 10, 1987 - DATE OF ORIGINAL ISSUE
APRIL 29, 1988 - FHWA REVIEW COMMENTS
SEPT. 20, 1993 - NEW RADIUS CHART, BARRICADE ALIGNMENT AND USE OF TEMPORARY TRAFFIC BARRIER
AUG. 08, 1995 - REVISED SIGNING PER MUTCD
JUNE 30, 2003 - CHANGED REFLECTIVE SHEETING TO TYPE III

APPROVED

DIRECTOR OF PROGRAM DEVELOPMENT
TRAFFIC OPERATIONS ENGINEER
FEDERAL HIGHWAY ADMINISTRATION

DELINEATION, BARRICADES AND DETOURS FOR CONSTRUCTION AREAS

VERMONT AGENCY OF TRANSPORTATION

STANDARD
E-107

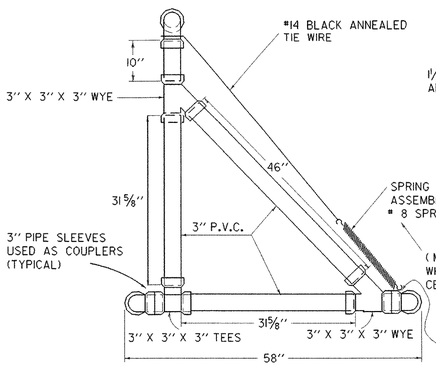

SIDE VIEW
TYPE III BARRICADE

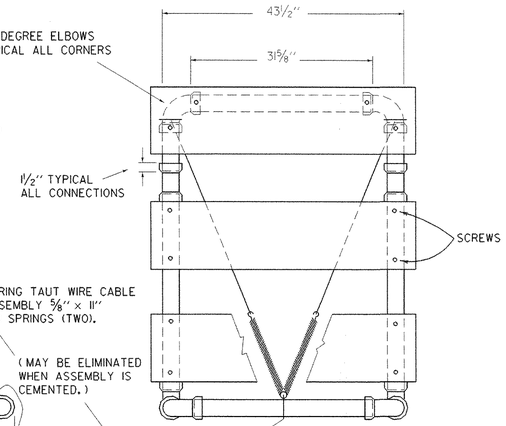

FRONT VIEW
TYPE III BARRICADE

MATERIALS FOR TYPE I AND II BARRICADES

20' - 1" PVC
4 - 1" PVC 90° ELBOWS
30" - 1/2" ID THINWALL PVC CONDUIT
36" - 1/4" STEEL ROD
4 - 1" WASHERS
24" - LIGHT DUTY CHAIN
1/2" - #14 PAN HEAD METAL SCREWS (AS REQUIRED)
2 - 3/4" COTTER PINS
2 OR 4 - 8" OR 12" X 36" X 0.025" BARRICADE RAILS (AS REQUIRED)

MATERIALS FOR TYPE III BARRICADES

30 LF - 3" I.D. PVC PIPE
6 - 3" 90 ELBOWS
2 - 3" TEES
4 - 3" WYES
3 - 8" OR 12" X 48" X 0.025" BARRICADE RAILS
2 - 5/8" X 11" #8 SPRING (IF ASSEMBLY IS NOT CEMENTED)
12 - 1" #14 PAN HEAD METAL SCREWS
15 LF - #14 BALCK ANNEALED TIE WIRE (IF ASSEMBLY IS NOT CEMENTED)

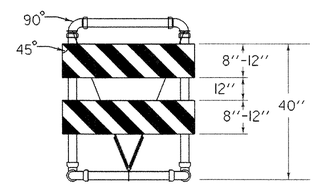

TYPE III (MODIFIED) BARRICADE
(STRIPING IS SHOWN WITH TRAFFIC PASSING TO THE RIGHT).

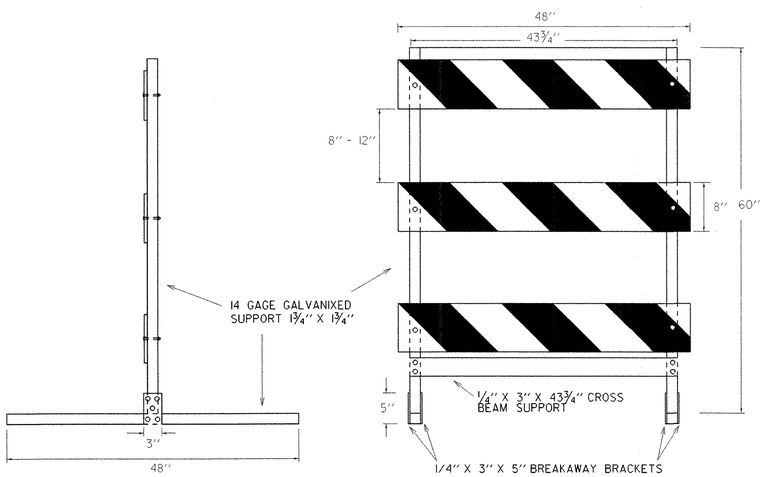

SIDE AND FRONT VIEW OF TYPE III METAL BARRICADE

MATERIALS FOR METAL TYPE III BARRICADES

PANELS (3):
8' X 48' GALVANIZED STEEL...COVERED 1 OR 2 SIDES WITH WHITE/ORANGE, DIAGONALLY STRIPED REFLECTIVE SHEETING

VERTICAL SUPPORTS (2): 14 GAGE GALVANIZED TUBING 1 3/4" X 1 3/4" X 60"
HORIZONTAL SUPPORTS (2): 14 GAGE GALVANIZED TUBING 1 3/4" X 1 3/4" X 48"
CROSS BEAM SUPPORT (1): COLD GALVANIZED STEEL 1/4" X 3" X 43 3/4"
BREAKAWAY BRACKETS (4): COLD GALVANIZED STEEL 1/4" X 3" X 5"

FASTENERS:
6 - SHEAR BOLTS WITH LOCK NUTS 1/4"D X 2 3/4"
4 - FULCRUM BOLTS WITH LOCK NUTS 3/8"D X 2 3/4"
4 - FASTENER BOLTS WITH LOCK NUTS 3/8"D X 2 3/4"
6 - PANEL BOLTS WITH LOCK NUTS AND WASHERS 1/4"D X 2"
ALL FASTENERS GALVANIZED STEEL.
ALL BOLTS HEX HEAD.

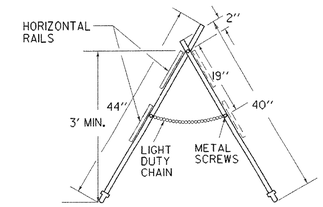

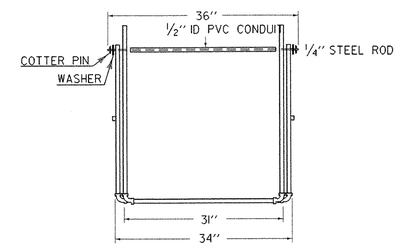

TYPE I AND TYPE II BARRICADE

MATERIALS

THE PIPE, WYES, TEES AND ELBOWS USED TO CONSTRUCT BARRICADES SHALL CONFORM TO THE REQUIREMENTS OF ASTM DESIGNATION D 2241FOR P.V.C. 1120 OR 1220 SDR-21, PRESSURE RATING 200 PSI. THE WYES, TEES AND ELBOWS SHALL CONFORM TO THE REQUIREMENTS OF ASTM DESIGNATION D 2466, TYPE II, GRADE 1. ALL JOINTS SHALL BE SLIP-FIT AND MAY BE LIGHTLY CEMENTED. THE BARRICADE RAILS SHALL BE FABRICATED FROM 0.025" ANODIZED, ALUMINUM AND SHALL HAVE REFLECTORIZED ALTERNATING ORANGE AND WHITE STRIPES (SLOPING DOWNWARD AT AN ANGLE OF 45 DEGREES IN THE DIRECTION TRAFFIC IS TO PASS).

MAINTENANCE

BARRICADES SHALL BE MAINTAINED IN CLEAN AND LEGIBLE CONDITIONS SATISFACTORY TO THE ENGINEER. THEY SHALL BE COMPLETELY VISIBLE TO APPROACHING TRAFFIC AT ALL TIMES. DAMAGED, DEFACED, OR DIRTY BARRICADES SHALL BE REPAIRED, CLEANED OR REPLACED AS ORDERED BY THE ENGINEER. THE P.V.C. PIPE AND FITTINGS SHALL BE WHITE IN COLOR. AT LEAST TWO (2) HOLES SHALL BE DRILLED (3/16" DIAM.) IN EACH SECTION OF PIPE AND FITTINGS IF THE ASSEMBLY IS NOT CEMENTED.

BARRICADES SHALL BE STABILIZED WITH SAND BAGS OF MINIMUM WEIGHT WHICH WILL NOT CONSTITUTE A HAZARD IF THE BARRICADE IS HIT. THESE SHALL BE PLACED ONLY ON THE FRONT AND REAR PIPES OF THE BASE FRAME OF THE BARRICADE. SAND BAG STABILIZERS SHALL BE SO PLACED AS NOT TO BE A HAZARD TO VEHICLES PASSING ON EITHER SIDE. IF BARRICADE REPLACEMENT COSTS CAN BE CONSIDERED NEGLIGIBLE, GLUED JOINTS MAY PROVIDE ADDITIONAL STABILITY TO THE INSTALLATION.

TYPE I BARRICADES SHALL UTILIZE ONE HORIZONTAL RAIL IN EACH DIRECTION.

TYPE II BARRICADES SHALL BE A TYPE I BARRICADE WITH AN ADDITIONAL HORIZONTAL RAIL MOUNTED BELOW THE OTHER IN EACH DIRECTION.

TYPE III BARRICADES (MODIFIED) SHALL CONSIST OF THE BREAKAWAY 3" PVC DESIGN SHOWN ON THIS SHEET WITH THE TWO RAIL LAYOUT DETAILED ABOVE LEFT.

SEE STD E-107 FOR ADDITIONAL INFORMATION.

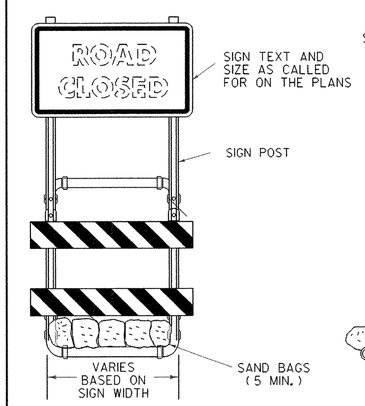

SIGN MOUNTING ON
TYPE III BARRICADE (MODIFIED)

NOTES:

1) REFER TO STANDARD TYPE III BARRICADE (ABOVE LEFT)
2) ALL BARRICADE JOINTS SHALL BE GLUED.
3) FIVE SAND BAGS ARE REQUIRED BOTH FRONT AND BACK, 50 LB. MINIMUM EACH.

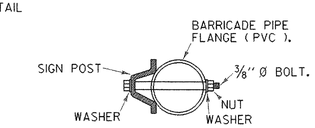

CONNECTION DETAIL

OTHER STDS. REQUIRED: **E-107**

REVISIONS AND CORRECTIONS
SEPT. 10, 1987 - ORIGINAL APPROVAL DATE
SEPT. 20, 1993 - REVISED NOTES AND TYPE III (MOD.) BARRICADE DETAIL
AUG. 08, 1995 - ADDED METAL TYPE III BARRICADE
JUN. 08, 2009 - MINOR CORRECTIONS

APPROVED
Kevin A. Marshia
HIGHWAY, SAFETY & DESIGN ENGINEER
Richard Tetreault
DIRECTOR OF PROGRAM DEVELOPMENT
Mark D. Richter
FEDERAL HIGHWAY ADMINISTRATION

BREAKAWAY BARRICADE DETAILS

/traf/std/stdel07a.dgn : stdel07a.i

VERMONT AGENCY OF TRANSPORTATION

STANDARD
E-107 A

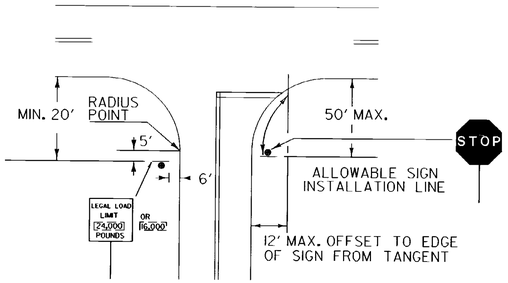

STOP SIGN SHALL BE PLACED ON DRIVERS RIGHT, MAINTAINING MAXIMUM VISIBLITY. CLEARANCE SHALL BE A MINIMUM OF 6' AND A MAXIMUM OF 50' FROM EDGE LINE OF INTERSECTING ROADWAY AND DOES NOT HAVE TO BE ADJACENT TO THE STOP BAR.

LEGAL LOAD LIMIT AND STOP SIGNS AT INTERSECTIONS WITH TOWN HIGHWAYS

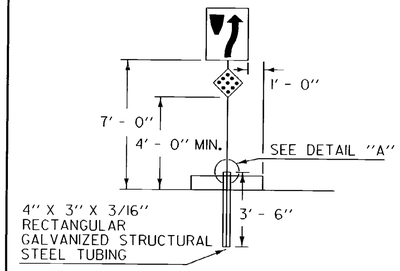

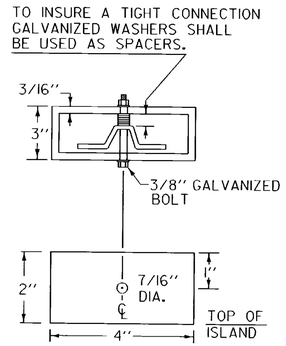

SLEEVE DETAIL "A"

SIGNS ON MEDIAN ISLANDS IN THE LINE OF TRAFFIC

INCREASE VERTICAL CLEARANCE TO 7' IN AREAS OF FREQUENT ROADSIDE PARKING OR PEDESTRIAN ACTIVITY

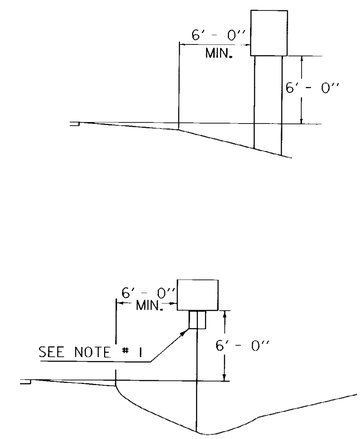

RURAL

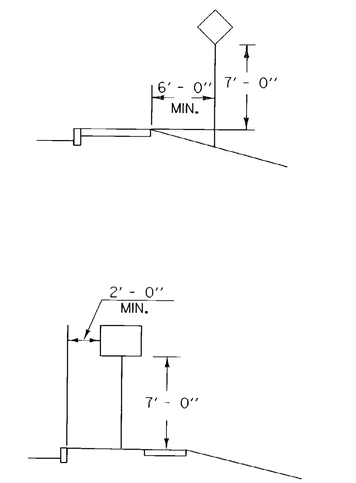

IF SUFFICIENT CLEARANCE IS NOT AVAILABLE BETWEEN CURB AND SIDEWALK MOUNT SIGN BEHIND SIDEWALK AS SHOWN AT TOP. CHECK FOR ADEQUATE R.O.W..

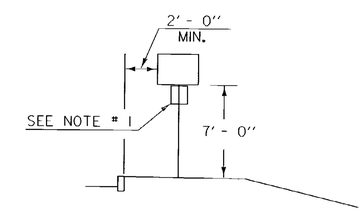

URBAN

NOTES:

1. IN BOTH RURAL AND URBAN LOCATIONS. IF A SECONDARY SIGN IS MOUNTED BELOW ANOTHER SIGN, THE MINIMUM CLEARANCE MAY BE REDUCED BY ONE FOOT.
2. IN RURAL AREAS WITH NO OR MINIMAL SHOULDER, THE LATERAL CLEARANCE TO THE EDGE OF A SIGN SHOULD BE A MINIMUM OF 12' FROM THE EDGE OF THE TRAVELED WAY.
3. ALSO SEE OTHER STANDARD SHEETS FOR MOUNTING CLEARANCE AND SPACING OF DESTINATION AND ROUTE MARKER ASSEMBLIES AND TOWN LINE SIGNS.

POST REFERENCE:

REFER TO THE DETAILS ON THE APPROPRIATE STANDARD DRAWING FOR INFORMATION CONCERNING THE PROPER MOUNTING OF SIGNS ON APPROPRIATE POSTS.

OTHER STDS. REQUIRED: E-160 E-161 E-162 E-163 E-164

REVISIONS AND CORRECTIONS

JAN. 23, 1995 - DATE OF ORIGINAL ISSUE

AUG. 08, 1995 - VARIOUS MINOR NOTE REVISIONS

APPROVED FOR THIS PROJECT AND/OR DESIGN IMPLEMENTATION. FHWA FINAL APPROVAL PENDING.

APPROVED

DIRECTOR OF ENGINEERING

TRAFFIC AND SAFETY ENGINEER

STANDARD SIGN PLACEMENT CONVENTIONAL ROAD

/traf/std/stdel21.dgn : stdel21.i

VERMONT AGENCY OF TRANSPORTATION

STANDARD E-121

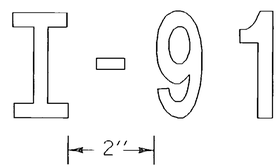

HYPHENATED WORD DETAIL

FOR EXAMPLE, ROUTE NUMBERS SHALL APPEAR AS: I-91, US5, VT22

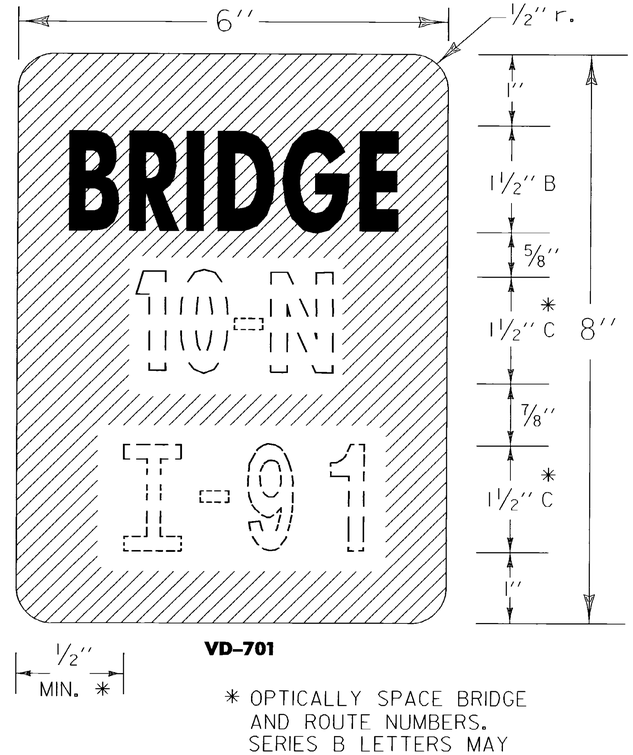

VD-701

* OPTICALLY SPACE BRIDGE AND ROUTE NUMBERS. SERIES B LETTERS MAY BE USED TO MAINTAIN VISUAL INTEGRITY.

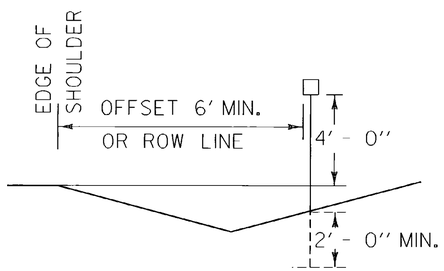

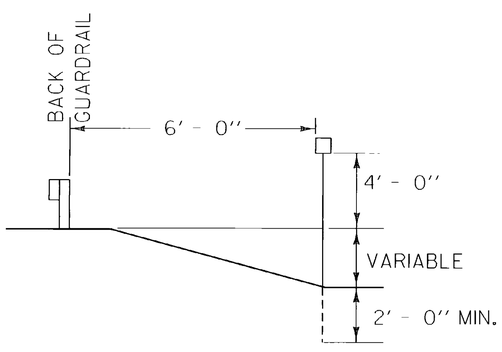

NOTES:

GENERAL:
DOTTED LINES AND NUMERALS INDICATE TEXT THAT VARIES.

PAYMENT:
BRIDGE PLAQUES SHALL BE PAID AS TRAFFIC SIGNS, TYPE 'A', AND POSTS PAID AS FLANGED CHANNEL STEEL SIGN POSTS.

MATERIAL:
THE SIGN BASE MATERIAL SHALL BE 0.04" FLAT SHEET ALUMINUM.

COLORS:
THE SIGN SHALL HAVE A REFLECTORIZED WHITE TEXT ON REFLECTORIZED GREEN BACKROUND. THE COLORS SHALL CONFORM WITH THOSE FOUND IN STANDARD COLOR TOLERANCE CHARTS AS APPROVED BY THE U.S. DEPARTMENT OF TRANSPORTATION, FEDERAL HIGHWAYADMINISTRATION.

LETTERING:
LETTERS AND DIGITS SHALL CONFORM WITH THE STANDARD ALPHABETS FOR HIGHWAY SIGNS AS PRINTED BY THE FEDERAL HIGHWAY ADMINISTRATION.

POSTS:
FLANGED CHANNEL STEEL 2#/FT POSTS SHALL BE USED WHEN THE POST LENGTH EXCEEDS 7 FEET. FOR LENGTH OF 7 FEET OR LESS, A 1.12#/FT STEEL SIGN POST SHALL BE USED.

OTHER STDS. REQUIRED:

REVISIONS AND CORRECTIONS

DEC. 17, 1989 - DATE OF ORIGINAL ISSUE
AUG. 08, 1995 - MISC NOTE REVISIONS

APPROVED FOR THIS PROJECT AND/OR DESIGN IMPLEMENTATION. FHWA FINAL APPROVAL PENDING.

APPROVED

Gordon S. MacCallum
DIRECTOR OF ENGINEERING

David A. Ross
TRAFFIC AND SAFETY ENGINEER

BRIDGE NUMBER PLAQUE

/traf/std/stdel34.dgn : stdel34.i

VERMONT AGENCY OF TRANSPORTATION

STANDARD
E-134

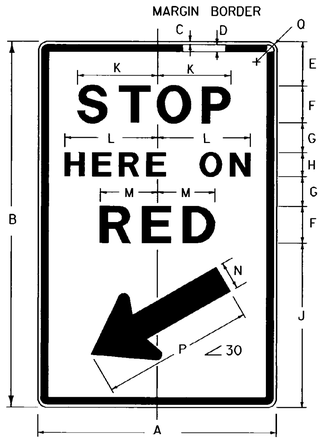

R10-6

SIGN	A	B	C	D	E	F	G	H
STD.	24	36	3/8	5/8	4	5D	2 1/2	3D
SPECIAL	36	48	5/8	7/8	6	6D	4	4D
	J	K	L	M	N	P	Q	
STD.	14	8 5/32	9 1/32	5 15/16	2 5/8	14 5/8	1 1/2	
SPECIAL	18	9 23/32	12 1/32	7 1/8	2 3/4	16	2 1/4	

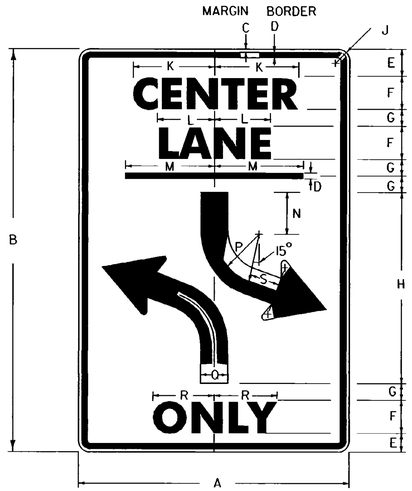

R3-9B

SIGN	DIMENSIONS (INCHES)									
	A	B	C	D	E	F	G	H	J	K
STD.	24	36	3/8	5/8	2 1/2	3E	1 1/2	16	1 1/2	8 7/16
SPECIAL	36	48	5/8	7/8	3 1/2	5E	1 1/2	20	2 1/4	14 1/16
	L		M	N	P	Q	R	S		
STD.	5 3/4		8	2 1/2	6	2	5 5/16	1 1/2		
SPECIAL	9 1/2		12	3	8	3	9 7/8	2		

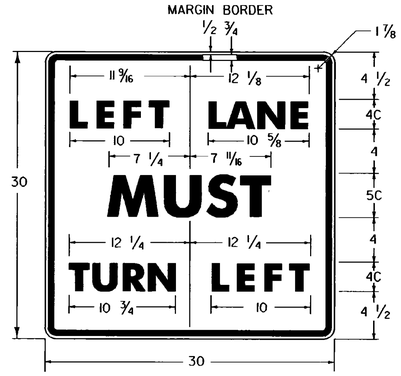

R3-7L

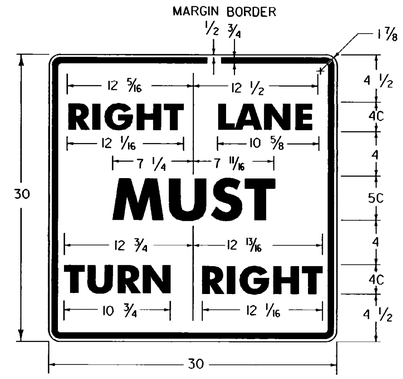

R3-7R

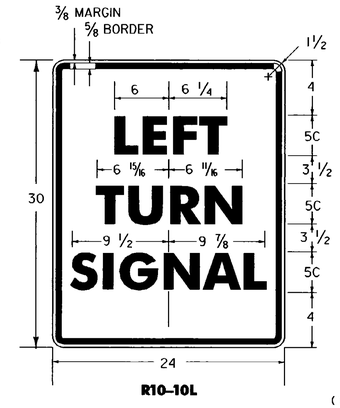

R10-10L

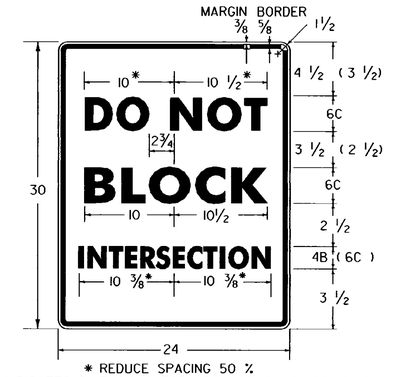

* REDUCE SPACING 50 %
( ) INDICATES DIMENSIONS FOR "DO NOT BLOCK DRIVE" SIGN

R10-7

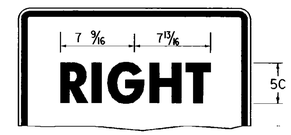

R10-10R

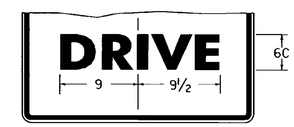

VR-656

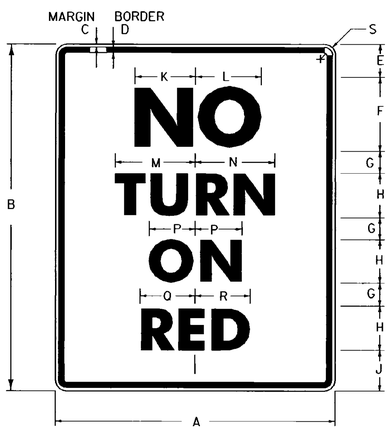

POST MOUNTING

R10-11A

SIGN	DIMENSIONS (INCHES)									
	A	B	C	D	E	F	G	H	J	K
STD.	24	30	3/8	5/8	3 1/4	5E	2 1/4	4D	3	4 13/16
SPECIAL	36	48	5/8	7/8	6	8E	3 1/2	6D	5 1/2	7 3/4
	L		M	N	P	Q	R	S		
STD.	5 3/16		6 5/8	6 1/2	3 1/2	4 5/8	4 7/8	1 1/2		
SPECIAL	8 1/4		10	9 3/4	5 1/4	6 7/8	7 3/8	2 1/4		

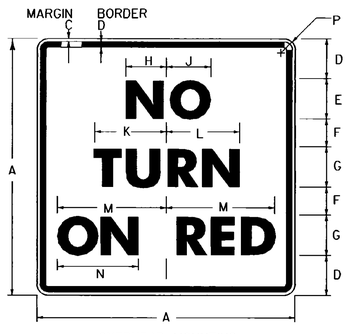

OVERHEAD MOUNTING

R10-11B

SIGN	DIMENSIONS (INCHES)													
	A	B	C	D	E	F	G	H	J	K	L	M	N	P
MIN.	18	3/8	5/8	2 3/4	3E	1 3/4	3D	2 15/16	3 1/16	5	4 7/8	7 1/8	5 1/4	1 1/2
STD.	24	3/8	5/8	3 1/2	4E	2 1/2	4D	3 7/8	4 1/8	6 5/8	6 1/2	9 1/2	6 1/2	1 1/2
SPECIAL	30	1/2	3/4	4 1/2	5E	3	5D	4 15/16	5 3/16	8 1/4	8 1/8	11 7/8	7 3/4	1 7/8

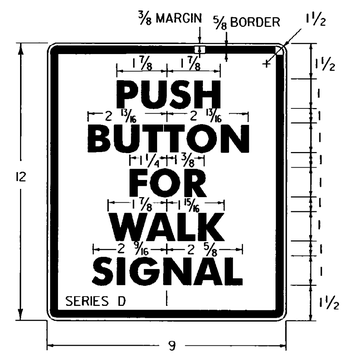

R10-4

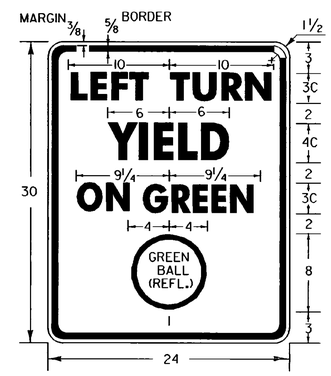

R10-12

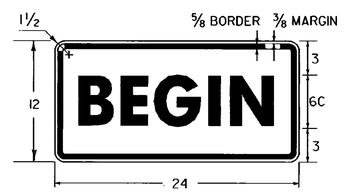

M4-11

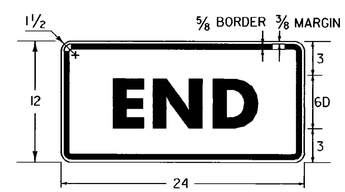

M4-6

GENERAL:

1. ALL DIMENSIONS IN INCHES.
2. SEE STANDARD E-144 FOR ARROWHEAD DETAILS.

COLORS:

THE REGULATORY SIGNS SHOWN ON THIS SHEET SHALL HAVE BLACK TEXT ON REFLECTORIZED WHITE BACKGROUND, UNLESS OTHERWISE NOTED. THE COLORS SHALL CONFORM WITH THE COLORS ADOPTED BY THE AMERICAN ASSOCIATION OF STATE HIGHWAY AND TRANSPORTATION OFFICIALS AND APPROVED BY THE DEPARTMENT OF TRANSPORTATION, FEDERAL HIGHWAY ADMINISTRATION.

MATERIALS:

THE SIGN BASE MATERIALS USED FOR REGULATORY SIGNS SHOWN ON THIS SHEET MAY BE ANY OF THE FOLLOWING OF THE MINIMUM THICKNESS NOTED.

	9'' X 12'' 18'' X 18''	24'' X 12'' 24'' X 24'' 24'' X 30'' 24'' X 36'' 30'' X 30''	36'' X 48''
FLAT SHEET ALUMINUM	0.060''	0.080''	0.100''
HIGH DENSITY OVERLAID PLYWOOD	1/2''	1/2''	5/8''
GALVANIZED FLAT SHEET STEEL	18 GAGE	16 GAGE	14 GAGE

THE REFLECTIVE MATERIAL FOR GROUND MOUNTED SIGNS SHALL BE AASHTO TYPE II OR III WHITE REFLECTIVE SHEETING APPLIED TO THE ENTIRE BACKGROUND OF THE SIGN. WHEN MOUNTED OVERHEAD, ALL SIGNS SHALL HAVE ENCAPSULATED LENS REFLECTIVE SHEETING APPLIED TO THE ENTIRE BACKGROUND OF THE SIGN. THE TEXT OF THE SIGNS MAY BE LETTERING FILM, SILK SCREENED OR HAND PAINTED. HAND PAINTING MUST BE COMPARABLE IN QUALITY TO THE RESULTS OBTAINED BY SILK SCREENING.

SPECIFICATIONS

REGULATORY SIGNS SHALL MEET THE VERMONT STANDARD SPECIFICATIONS FOR TRAFFIC SIGNS.

TEXT DESIGN:

LETTERS, DIGITS, ARROWS, SPACING AND TEXT DIMENSIONS SHALL CONFORM WITH THE ''STANDARD ALPHABET FOR HIGHWAY SIGNS AND PAVEMENT MARKINGS'' AND DESIGNS PRESCRIBED IN THE STANDARD HIGHWAY SIGNS AS SPECIFIED IN THE MANUAL ON UNIFORM TRAFFIC CONTROL DEVICES.

OTHER STDS. : E-144
REQUIRED

REVISIONS AND CORRECTIONS

OCT. 30, 1987 - DATE OF ORIGINAL ISSUE
SEPT. 20, 1995 - ADDED SIGN ID NUMBERS, MINOR NOTE REVISIONS, SHEET REALIGNMENT
AUG. 30, 1996 - MADE ERROR CORRECTIONS TO SIGN DETAILS R10-6 & R10-11B

APPROVED FOR THIS PROJECT AND/OR DESIGN IMPLEMENTATION. FHWA FINAL APPROVAL PENDING.

APPROVED

DIRECTOR OF ENGINEERING

TRAFFIC AND SAFETY ENGINEER

REGULATORY SIGN DETAILS

/traf/std/stdel40.dgn : stdel40.i

VERMONT AGENCY OF TRANSPORTATION

STANDARD
E-140

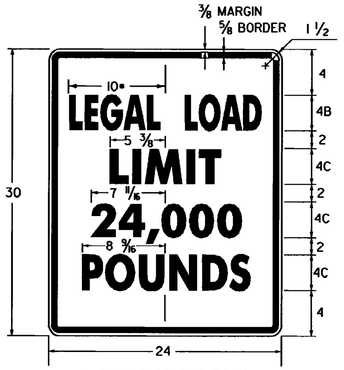

* REDUCE SPACING 50 %
LINE 3 ALTERNATE - 16,000

VR-017

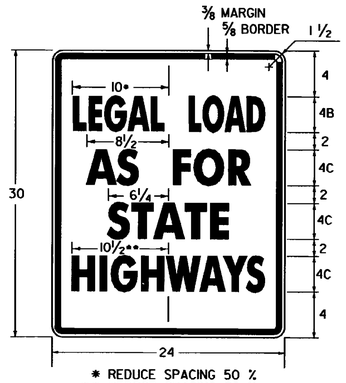

* REDUCE SPACING 50 %
** REDUCE SPACING 38 %

VR-079

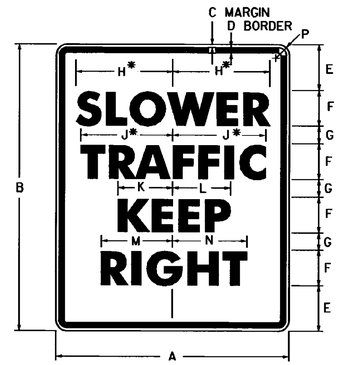

* REDUCE SPACING 25 %

R4-3

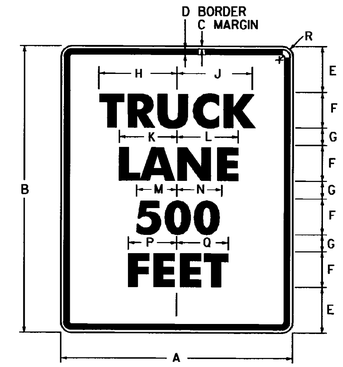

R4-6

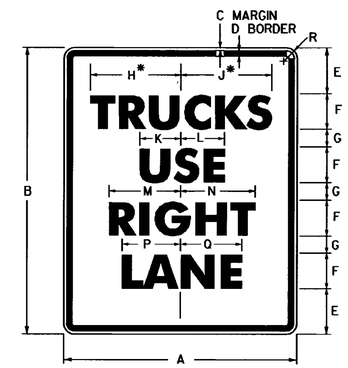

* REDUCE SPACING 32 %

R4-5

SIGN	DIMENSIONS (INCHES)													
	A	B	C	D	E	F	G	H	J	K	L	M	N	P
STD.	24	30	3/8	5/8	3 5/8	4D	2 1/4	9 3/4	10	6	6 9/16	7 1/8	7 5/8	1 1/2
EXPWY.	36	48	5/8	7/8	6	6D	4	14 5/8	15	9	9 13/16	10 11/16	11 3/8	2 1/4
FWY.	48	60	3/4	1 1/4	7 1/4	8D	4 1/2	19 1/2	20	12	13 1/8	14 1/4	15 1/4	3

SIGN	DIMENSIONS (INCHES)															
	A	B	C	D	E	F	G	H	J	K	L	M	N	P	Q	R
STD.	24	30	3/8	5/8	3 5/8	4E	2 1/4	9 13/16	9 11/16	7 9/16	7 11/16	5 11/16	5 13/16	6 7/8	7 1/16	1 1/2
EXPWY.	36	48	5/8	7/8	6	6E	4	14 3/4	14 1/2	11 5/16	11 1/2	8 1/2	8 3/4	10 5/16	10 5/8	2 1/4
FWY.	48	60	3/4	1 1/4	7 1/4	8E	4 1/2	19 5/8	19 3/8	15 1/8	15 3/8	11 3/8	11 5/8	13 3/4	14 1/8	3

SIGN	DIMENSIONS (INCHES)															
	A	B	C	D	E	F	G	H	J	K	L	M	N	P	Q	R
STD.	24	30	3/8	5/8	3 5/8	4D	2 1/4	9 9/16	9 3/16	4 3/4	5	7 1/8	7 5/8	6 1/4	6 5/8	1 1/2
EXPWY.	36	48	5/8	7/8	6	6D	4	14 5/16	13 13/16	7 1/8	7 1/2	10 11/16	11 3/8	9 3/8	9 15/16	2 1/4
FWY.	48	60	3/4	1 1/4	7 1/4	8D	4 1/2	19 1/8	18 3/8	9 1/2	10	14 1/4	15 1/4	12 1/2	13 1/4	3

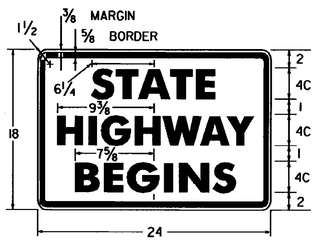

VR-039

VR-038

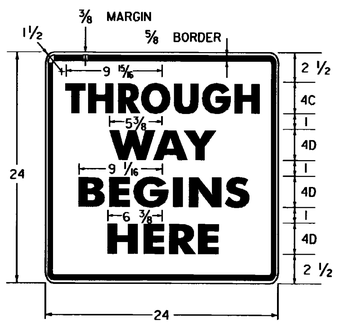

VR-041

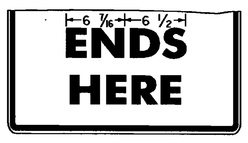

VR-040

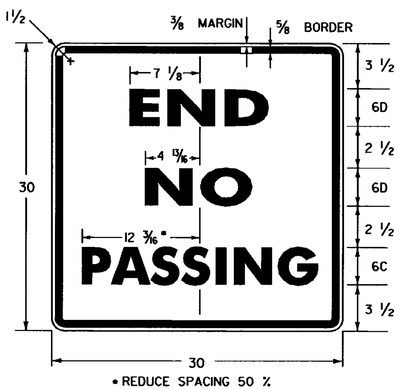

* REDUCE SPACING 50 %

VR-417

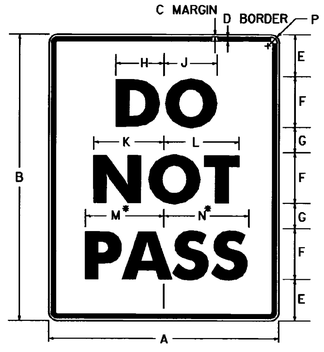

* REDUCE SPACING 40 %

R4-1

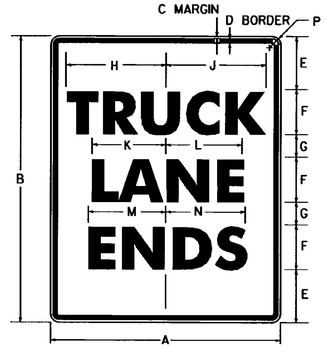

VR-186

SIGN	DIMENSIONS (INCHES)													
	A	B	C	D	E	F	G	H	J	K	L	M	N	P
STD.	24	30	3/8	5/8	3 1/2	6D	2 1/2	4 11/16	5	7 1/8	7 3/8	9 3/8	9 3/4	1 1/2
EXPWY.	36	48	5/8	7/8	7	8D	5	6 1/4	6 5/8	9 1/2	9 3/4	12 1/2	13	2 1/4
FWY.	48	60	3/4	1 1/4	8	10D	7	7 3/4	8 5/16	11 7/8	12 1/4	15 5/8	16 1/4	3

SIGN	DIMENSIONS (INCHES)													
	A	B	C	D	E	F	G	H	J	K	L	M	N	P
STD.	24	30	3/8	5/8	3 1/2	6C	2 1/2	10 1/4	10 3/16	7 3/4	7 3/4	7 15/16	8	1 1/2
EXPWY.	36	48	5/8	7/8	7	8C	5	13 11/16	13 5/8	10 3/8	10 5/16	10 11/16	10 11/16	2 1/4
FWY.	48	60	3/4	1 1/4	8	10D	7	20 5/8	20 5/8	15 7/8	15 5/16	16 1/16	16 1/16	3

GENERAL:

1. ALL DIMENSIONS IN INCHES.

COLORS:

THE REGULATORY SIGNS SHOWN ON THIS SHEET SHALL HAVE BLACK TEXT ON REFLECTORIZED WHITE BACKGROUND, UNLESS OTHERWISE NOTED. THE COLORS SHALL CONFORM WITH THE COLORS ADOPTED BY THE AMERICAN ASSOCIATION OF STATE HIGHWAY AND TRANSPORTATION OFFICIALS AND APPROVED BY THE DEPARTMENT OF TRANSPORTATION, FEDERAL HIGHWAY ADMINISTRATION.

MATERIALS:

THE SIGN BASE MATERIALS USED FOR REGULATORY SIGNS SHOWN ON THIS SHEET MAY BE ANY OF THE FOLLOWING OF THE MINIMUM THICKNESS NOTED.

	24'' X 18'' 24'' X 24'' 24'' X 30'' 30'' X 30''	36'' X 48'' 48'' X 60''
FLAT SHEET ALUMINUM	0.080''	0.100''
HIGH DENSITY OVERLAID PLYWOOD	1/2''	5/8''
GALVANIZED FLAT SHEET STEEL	16 GAGE	14 GAGE

THE REFLECTIVE MATERIAL FOR GROUND MOUNTED SIGNS SHALL BE AASHTO TYPE II OR III WHITE REFLECTIVE SHEETING APPLIED TO THE ENTIRE BACKGROUND OF THE SIGN. THE THE TEXT OF THE SIGNS MAY BE LETTERING FILM, SILK SCREENED OR HAND PAINTED. HAND PAINTING MUST BE COMPARABLE IN QUALITY TO THE RESULTS OBTAINED BY SILK SCREENING.

SPECIFICATIONS:

REGULATORY SIGNS SHALL MEET THE VERMONT STANDARD SPECIFICATIONS FOR TRAFFIC SIGNS.

TEXT DESIGN:

LETTERS, DIGITS, ARROWS, SPACING AND TEXT DIMENSIONS SHALL CONFORM WITH THE ''STANDARD ALPHABET FOR HIGHWAY SIGNS AND PAVEMENT MARKINGS'' AND DESIGNS PRESCRIBED IN THE STANDARD HIGHWAY SIGNS AS SPECIFIED IN THE MANUAL ON UNIFORM TRAFFIC CONTROL DEVICES.

OTHER STDS. : NONE REQUIRED

REVISIONS AND CORRECTIONS

OCT. 30, 1987 - DATE OF ORIGINAL ISSUE
SEPT. 20, 1995 - ADDED AND DELETED SIGN DETAIL, ADDED SIGN ID NUMBERS, MINOR NOTE REVISIONS.

APPROVED FOR THIS PROJECT AND/OR DESIGN IMPLEMENTATION. FHWA FINAL APPROVAL PENDING.

APPROVED

DIRECTOR OF ENGINEERING

TRAFFIC AND SAFETY ENGINEER

REGULATORY SIGN DETAILS

/traf/std/stdel41.dgn : stdel41.1

VERMONT AGENCY OF TRANSPORTATION

STANDARD

E-141

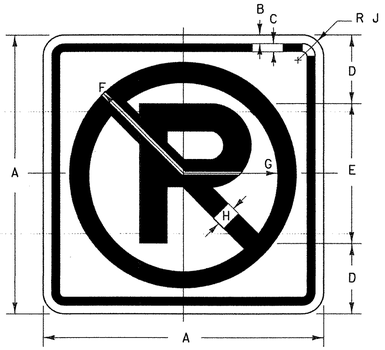

R8-3A

COLORS:
CIRCLE AND DIAGONAL - RED (RETROREFL)
SYMBOL AND BORDER - BLACK (NON - REFL)
BACKGROUND - WHITE (RETROREFL)

SIGN	DIMENSIONS (INCHES)								
	A	B	C	D	E	F	G	H	J
URBAN MIN. AND STD.	12	3/8	3/8	3	6E(M)	4 7/8	3 7/8	1	1 1/2
RURAL MIN. AND STD.	24	3/8	5/8	6	12E(M)	10 1/2	8 1/2	2	1 1/2
EXPWY.	36	5/8	7/8	9	18E(M)	15 3/4	12 3/4	3	2 1/4
FWY.	48	3/4	1 1/4	12	24E(M)	21	17	4	3

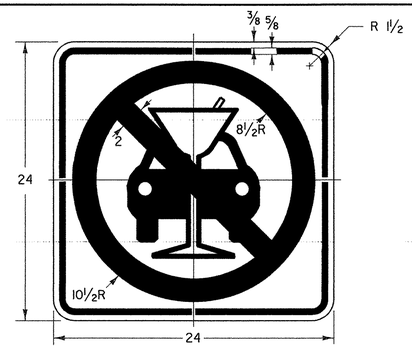

VR-654

COLORS:
CIRCLE AND DIAGONAL - RED (RETROREFL)
SYMBOL AND BORDER - BLACK (NON - REFL)
BACKGROUND - WHITE (RETROREFL)

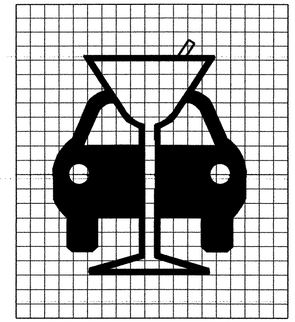

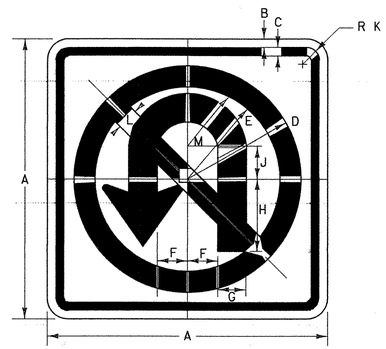

R3-4

SEE STANDARD E-151 FOR ARROW DETAIL

COLORS:
CIRCLE AND DIAGONAL - RED (RETROREFL)
ARROW AND BORDER - BLACK (NON - REFL)
BACKGROUND - WHITE (RETROREFL)

SIGN	DIMENSIONS (INCHES)											
	A	B	C	D	E	F	G	H	J	K	L	M
MIN. AND STD.	24	3/8	5/8	10 1/2	8 1/2	2 1/2	2 1/2	6	2 1/4	1 1/2	2	5
SPECIAL	30	1/2	3/4	13 1/8	10 5/8	3 1/8	3 1/8	7 1/2	2 13/16	1 7/8	2 1/2	6 1/4
EXPWY.	36	5/8	7/8	15 3/4	12 3/4	3 3/4	3 3/4	9	3 3/8	2 1/4	3	7 1/2
SPECIAL	48	3/4	1 1/4	21	17	5	5	12	4 1/2	3	4	10

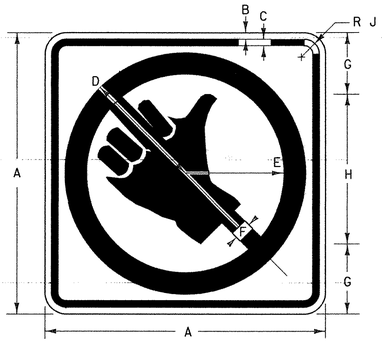

R9-4A

COLORS:
CIRCLE AND DIAGONAL - RED (RETROREFL)
SYMBOL AND BORDER - BLACK (NON - REFL)
BACKGROUND - WHITE (RETROREFL)

SIGN	DIMENSIONS (INCHES)								
	A	B	C	D	E	F	G	H	J
MIN.	18	3/8	5/8	7 7/8	6 3/8	1 1/2	3 3/4	10 1/2	1 1/2
STD.	24	3/8	5/8	10 1/2	8 1/2	2	5	14	1 1/2

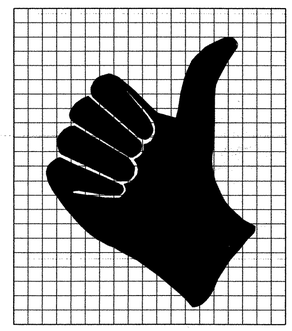

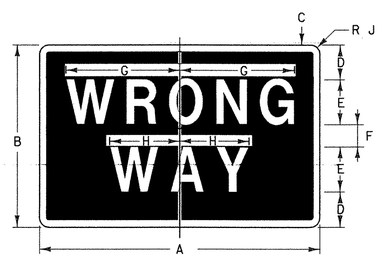

R5-1A

COLORS:
LEGEND - WHITE (RETROREFL)
BACKGROUND - RED (RETROREFL)

SIGN	DIMENSIONS (INCHES)								
	A	B	C	D	E	F	G	H	J
STD.	36	24	3/4	4 1/2	6D	3	13 5/16	8 1/16	1 1/2
SPECIAL	42	30	7/8	5	8D	4	17 3/4	10 3/4	1 7/8

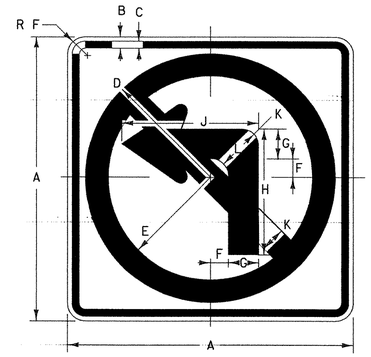

R3-2

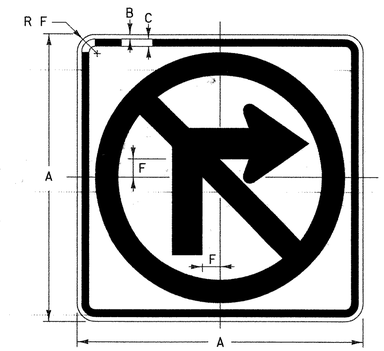

R3-1

NOTE
SEE STANDARD E-151 FOR ARROW DETAIL
USE SAME ARROW DETAIL FOR R3-1 AND R3-2

COLORS:
CIRCLE AND DIAGONAL - RED (RETROREFL)
ARROW AND BORDER - BLACK (NON - REFL)
BACKGROUND - WHITE (RETROREFL)

SIGN	DIMENSIONS (INCHES)										
	A	B	C	D	E	F	G	H	J	K	L
MIN. AND STD.	24	3/8	5/8	10 1/2	8 1/2	1 1/2	2 1/2	10 1/2	11 1/2	2	1/2
SPECIAL	30	1/2	3/4	13 1/8	10 5/8	1 7/8	3 1/8	13 1/8	14 1/2	2 1/2	5/8
EXPWY.	36	5/8	7/8	15 3/4	12 3/4	2 1/4	3 3/4	15 3/4	17 1/4	3	3/4
SPECIAL	48	3/4	1 1/4	21	17	3	5	21	23	4	1

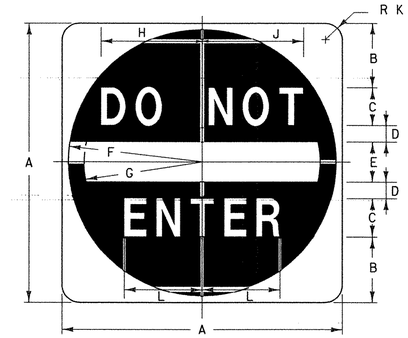

R5-1

COLORS:
SYMBOL - RED (RETROREFL)
LEGEND AND BACKGROUND - WHITE (RETROREFL)

SIGN	DIMENSIONS (INCHES)										
	A	B	C	D	E	F	G	H	J	K	L
MIN. AND STD.	30	6 1/2	4D	2	5	14 1/2	12 1/2	9 3/4	10	1 7/8	7 7/8
EXPWY.	36	7 1/2	5D	2 1/2	6	17 1/2	15	12	12 3/8	2 1/4	9 13/16
SPECIAL	48	11	6D	3	8	23 1/2	20	14 1/2	15	3	11 3/4

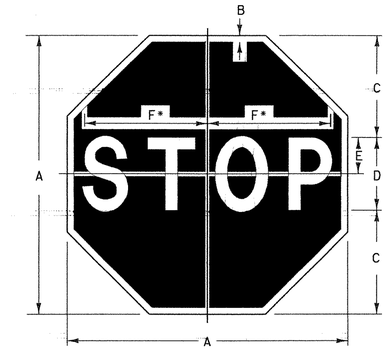

R1-1

* REDUCE SPACING 40 %

COLORS:
LEGEND - WHITE (RETROREFL)
BACKGROUND - RED (RETROREFL)

SIGN	DIMENSIONS (INCHES)					
	A	B	C	D	E	F
PATH	18	3/8	6	6C	3	7 3/4
MIN.	24	5/8	8	8C	4	10
STD.	30	3/4	10	10C	5	12 1/2
EXPWY.	36	7/8	12	12C	6	15
SPECIAL	48	1 1/4	16	16C	8	20

(ALL DIMENSIONS SHOWN IN INCHES EXCEPT WHERE NOTED)

NOTES

DESIGN

LETTERS, DIGITS, ARROWS, SPACING AND TEXT DIMENSIONS SHALL CONFORM WITH THE "STANDARD HIGHWAY SIGNS BOOK" AND DESIGNS PRESCRIBED IN THE MANUAL ON UNIFORM TRAFFIC CONTROL DEVICES (MUTCD) ADOPTED BY THE U.S. DEPARTMENT OF TRANSPORTATION, FEDERAL HIGHWAY ADMINISTRATION (FHWA). SEE STANDARD E-144 FOR ARROWHEAD DETAILS.

MATERIALS

THE SIGN BASE MATERIALS USED FOR REGULATORY SIGNS SHOWN ON THIS SHEET MAY BE ANY OF THE FOLLOWING OF THE MINIMUM THICKNESS NOTED.

	12" X 12" 18" X 18"	24" X 24" 30" X 18" 30" X 30"	36" X 24" 36" X 36" 42" X 30"	48"X48"
FLAT SHEET ALUMINUM	0.060"	0.080"	0.100"	0.125"

REFLECTORIZATION

THE BACKGROUND RETROREFLECTIVE MATERIAL SHALL BE ASTM TYPE III OR TYPE VIII RETROREFLECTIVE SHEETING APPLIED TO THE ENTIRE BACKGROUND OF THE SIGN. THE BLACK PORTIONS OF SIGNS MAY BE LETTERING FILM OR SILK SCREENED.

COLORS

THE REGULATORY SIGNS SHOWN ON THIS SHEET SHALL BE AS DETAILED FOR EACH SIGN. THE COLORS SHALL CONFORM WITH THE COLORS ADOPTED BY AASHTO AND APPROVED BY THE FHWA.

SPECIFICATIONS

REGULATORY SIGNS SHALL MEET THE VERMONT STANDARD SPECIFICATIONS FOR CONSTRUCTION "TRAFFIC SIGNS".

OTHER STDS. REQUIRED: E-144, E-151

REVISIONS AND CORRECTIONS

OCT. 30, 1987 - DATE OF ORIGINAL ISSUE
SEPT. 20, 1995 - ADDED AND DELETED SIGN DETAILS, ADDED SIGN ID NUMBERS, MINOR NOTE REVISIONS.
JUNE 15, 2004 - CHANGED REFLECTIVE SHEETING TO TYPE III OR TYPE VIII

APPROVED

DIRECTOR OF PROGRAM DEVELOPMENT

TRAFFIC OPERATIONS ENGINEER

FEDERAL HIGHWAY ADMINISTRATION

REGULATORY SIGN DETAILS

VERMONT AGENCY OF TRANSPORTATION

STANDARD
E-143

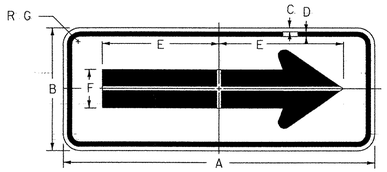

W1-6

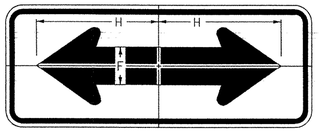

W1-7

SIGN	DIMENSIONS (INCHES)							
	A	B	C	D	E	F	G	H
PATH	24	12	3/8	5/8	9 5/8	3 1/4	1 1/2	10 3/8
MIN.	36	18	3/8	5/8	14 5/8	5	1 1/2	15 5/8
STD.	48	24	1/2	3/4	19 1/2	6 1/2	1 7/8	20 1/2
SPECIAL	60	30	5/8	7/8	24 3/8	8	2 1/4	25 3/8

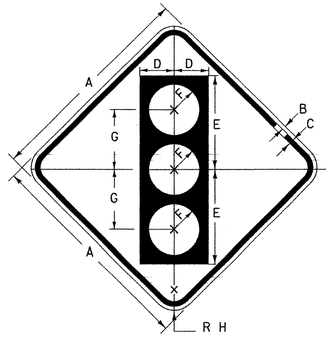

W3-3

COLORS:

SYMBOL AND LEGEND - BLACK (NON-REFL)
TOP CIRCLE- RED (RETROREFL)
MIDDLE CIRCLE- YELLOW (RETROREFL)
BOTTOM CIRCLE- GREEN (RETROREFL)
BACKGROUND - YELLOW (RETROREFL)

SIGN	DIMENSIONS (INCHES)							
	A	B	C	D	E	F	G	H
PATH	18	3/8	5/8	3	8	2 1/4	5	1 1/2
MIN.	30	1/2	3/4	5	13 3/4	3 3/4	8 3/4	1 7/8
STD.	36	5/8	7/8	5 3/4	15 3/4	4 1/4	10	2 1/4
SPECIAL	48	3/4	1 1/4	7 1/2	20	5	12 1/2	3

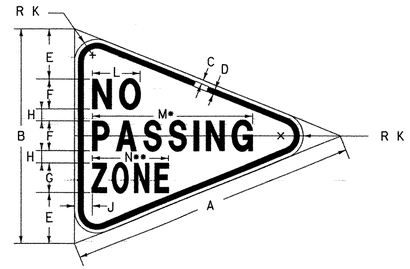

W14-3

• FOR STD. SIZE REDUCE SPACING 20%
•• FOR STD. SIZE REDUCE SPACING 35%

SIGN	DIMENSIONS (INCHES)												
	A	B	C	D	E	F	G	H	J	K	L	M	N
MIN.	40	30	1/2	3/4	7 1/4	4D	4C	1 3/4	2 1/2	1 7/8	6 1/2	22 9/16	11 11/16
STD.	48	36	5/8	7/8	8 1/2	5D	5C	2	3	2 1/4	8	26 13/16	12 3/4
SPECIAL	64	48	3/4	1 1/4	12	6D	6C	3	4	3	10 3/4	33 11/16	16 9/16

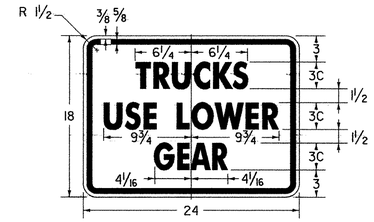

W7-2b

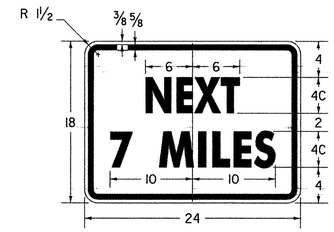

W7-3a

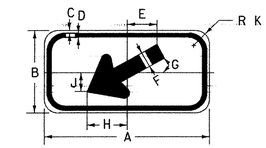

W16-7p

SIGN	DIMENSIONS (INCHES)									
	A	B	C	D	E	F	G	H	J	K
MIN. OR STD.	24	12	3/8	5/8	4 1/4	3	30°	5 3/4	3 3/8	2
EXPWY. OR SPECIAL	30	18	1/2	3/4	6 2/5	4 1/2	30°	8 3/5	4 4/5	2

• MAY BE FLUORESCENT YELLOW GREEN WHEN USED WITH S1-1 SCHOOL SIGN

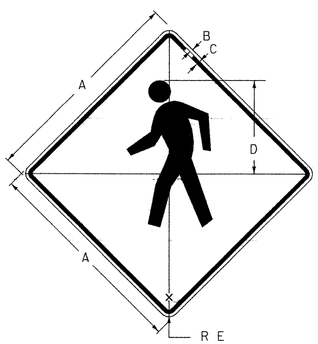

W11-2

SIGN	DIMENSIONS (INCHES)				
	A	B	C	D	E
PATH	18	3/8	5/8	8 3/8	1 1/2
MIN.	24	3/8	5/8	11	1 1/2
STD.	30	1/2	3/4	13 1/2	1 7/8
EXPWY.	36	5/8	7/8	16	2 1/4
SPECIAL	48	3/4	1 1/4	22	3

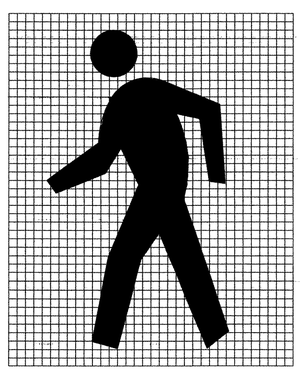

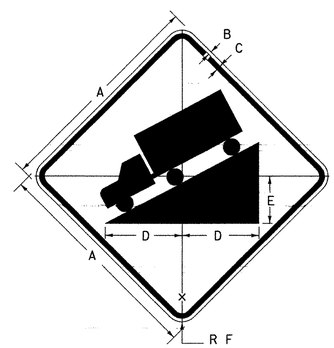

W7-1

SIGN	DIMENSIONS (INCHES)					
	A	B	C	D	E	F
MIN.	24	3/8	5/8	8 3/4	6	1 1/2
STD.	30	1/2	3/4	11	7 1/2	1 7/8
EXPWY.	36	5/8	7/8	13 1/4	9	2 1/4
FWY.	48	3/4	1 1/4	17 1/2	12	3

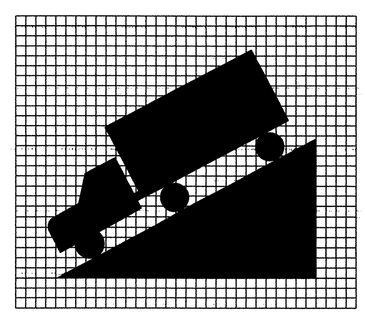

(ALL DIMENSIONS SHOWN IN INCHES EXCEPT WHERE NOTED)

NOTES

DESIGN

LETTERS, DIGITS, ARROWS, SYMBOLS, SPACINGS, AND TEXT DIMENSIONS SHALL CONFORM WITH THE "STANDARD HIGHWAY SIGNS BOOK" AND DESIGNS PRESCRIBED IN THE MANUAL ON UNIFORM TRAFFIC CONTROL DEVICES (MUTCD) ADOPTED BY THE U.S. DEPARTMENT OF TRANSPORTATION, FEDERAL HIGHWAY ADMINSITRATION (FHWA). SEE STANDARD SHEET E-151 FOR ARROWHEAD DETAILS.

MATERIALS

THE SIGN BASE MATERIALS USED FOR THE WARNING SIGNS SHOWN ON THIS SHEET MAY BE ANY OF THE FOLLOWING, OF THE MINIMUM THICKNESS NOTED.

	18" x 18"	24" x 12" 24" x 24" 30" x 30"	36" x 18" 40" x 30" 36" x 36"	48" x 24" 48" x 36" 48" x 48" 60" x 30" 64" x 48"
FLAT SHEET ALUMINUM	0.060"	0.080"	0.100"	0.125"

REFLECTORIZATION

THE BACKGROUND RETROREFLECTIVE MATERIAL SHALL BE ASTM TYPE III, TYPE VIII OR TYPE IX RETROREFLECTIVE SHEETING APPLIED TO THE ENTIRE SIGN.
THE TEXT, BORDER AND SYMBOLS SHALL BE LETTERING FILM OR SILK SCREENED.

COLORS

ALL THE WARNING SIGNS SHOWN ON THIS SHEET SHALL HAVE BLACK TEXT AND SYMBOLS ON RETROREFLECTORIZED YELLOW BACKGROUND. FLUORESCENT YELLOW GREEN BACKGROUND MAY BE USED AS AN OPTION FOR PEDESTRIAN SIGNS AS APPROVED BY THE MUTCD. THE COLORS SHALL CONFORM WITH THE COLORS ADOPTED BY AASHTO AND APPROVED BY THE FHWA.

SPECIFICATIONS

WARNING SIGNS SHALL MEET THE VERMONT STANDARD SPECIFICATIONS FOR CONSTRUCTION "TRAFFIC SIGNS".

OTHER STDS. REQUIRED: E-151

REVISIONS AND CORRECTIONS

OCT. 30, 1987 - DATE OF ORIGINAL ISSUE
JANUARY 1991 - 4 X 2 ARROW ENCAPSULATED LENS & 40 X 30 ADDED
OCT. 21, 1992 - PENNANT SIZE ADDED
AUG. 08, 1995 - DELETED & ADDED SIGN DETAILS AND ADDED I.D. NUMBER TO EACH DETAIL
MAY 01, 2004 - ADDED OPTIONAL COLOR FOR PEDESTRIAN SIGNS, CHANGED REFLECTIVE SHEETING TO TYPE III OR TYPE IX, AND ADDED W16-7 ADDED PATH DIMENSIONS

APPROVED

DIRECTOR OF PROGRAM DEVELOPMENT

TRAFFIC OPERATIONS ENGINEER

FEDERAL HIGHWAY ADMINISTRATION

WARNING SIGN DETAILS

VERMONT AGENCY OF TRANSPORTATION

STANDARD
E-152

W5-1

• REDUCE SPACING 25%

SIGN	DIMENSIONS (INCHES)										
	A	B	C	D	E	F	G	H	J	K	L
MIN.	30	1/2	3/4	5D	3	1 3/4	7 7/8	8 5/8	14 3/4	15 1/8	1 7/8
STD.	36	5/8	7/8	6D	3 1/2	2	9 1/2	10 5/16	17 5/8	18 1/4	2 1/4
SPECIAL	48	3/4	1 1/4	8D	4	3	12 11/16	13 3/4	23 1/2	23 3/8	3

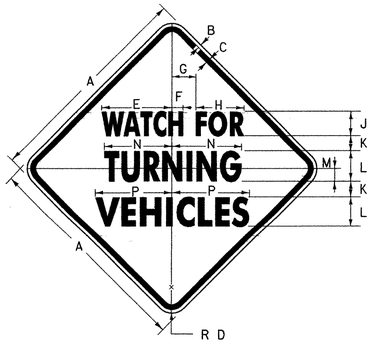

VW-205

SIGN	DIMENSIONS (INCHES)													
	A	B	C	D	E	F	G	H	J	K	L	M	N	P
MIN.	30	1/2	3/4	1 7/8	9 5/8	1 1/2	3 3/8	6 3/8	4B	2	5B	2	9 1/4	10 1/4
STD.	36	5/8	7/8	2 1/4	11 3/4	1 7/8	4	8	4C	2 1/2	5C	2	11 1/2	12 7/8
SPECIAL	48	3/4	1 1/4	3	14 3/4	2 3/8	5 3/8	10	5C	3 3/8	8B	2 5/8	14 13/16	16 7/16

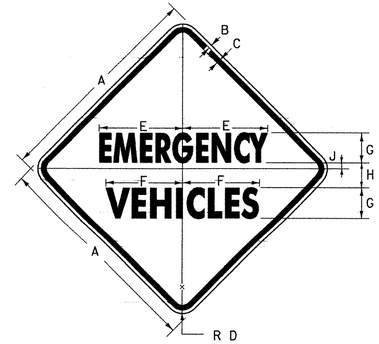

VW-544

• REDUCE SPACING 50%

SIGN	DIMENSIONS (INCHES)								
	A	B	C	D	E	F	G	H	J
MIN.	30	1/2	3/4	1 7/8	12 3/4	9 1/16	4C•	3 3/8	7/8
STD.	36	5/8	7/8	2 1/4	14 3/16	11 5/16	5C•	4	1
SPECIAL	48	3/4	1 1/4	3	19 1/8	15 7/16	6C	5 3/8	1 3/8

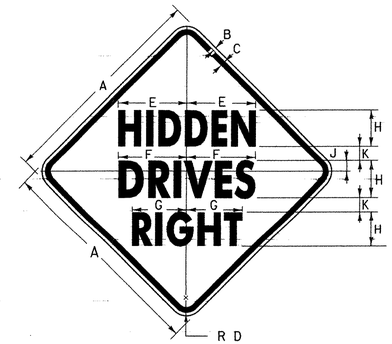

VW-133

VW-054

SIGN	DIMENSIONS (INCHES)											
	A	B	C	D	E	F	G	H	J	K	L	M
PATH	18	3/8	5/8	1 3/8	5 5/8	5 5/8	4 7/16	3C	7/8	1 13/16	4 9/16	3 5/16
MIN.	24	3/8	5/8	1 1/2	7 11/16	7 5/8	6 3/16	4C	1 3/16	2	6 3/16	4 7/8
STD.	30	1/2	3/4	1 7/8	9 9/16	9 1/2	7 11/16	5C	1 1/2	2	7 3/4	6 1/8
EXPWY.	36	5/8	7/8	2 1/4	11 7/16	11 7/16	9 3/16	6C	1 13/16	2 3/8	9 5/16	7 3/8
SPECIAL	48	3/4	1 1/4	3	15 3/8	15 1/4	12 5/16	8C	2 3/8	3 3/16	12 3/8	9 13/16

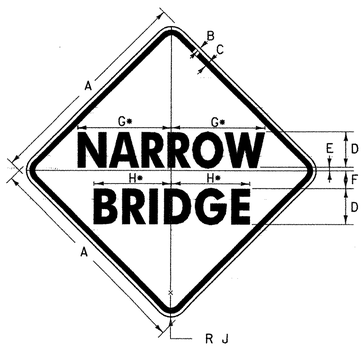

W5-2

• REDUCE SPACING 20%

SIGN	DIMENSIONS (INCHES)								
	A	B	C	D	E	F	G	H	J
PATH	18	3/8	5/8	3D	1/4	1 3/8	7 5/8	6 1/4	1 3/8
MIN.	24	3/8	5/8	4D	1/4	2	10 7/16	8 3/4	1 1/2
STD.	30	1/2	3/4	5D	1/2	2 1/2	13 11/16	10 7/8	1 7/8
SPECIAL	36	5/8	7/8	6D	3/4	3	15 11/16	13 11/16	2 1/4

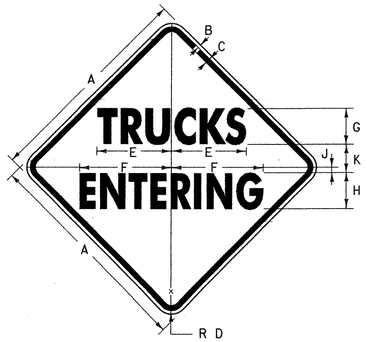

VW-202

SIGN	DIMENSIONS (INCHES)									
	A	B	C	D	E	F	G	H	J	K
MIN.	30	1/2	3/4	1 7/8	14 7/16	6 11/16	5C	5C	3/4	4
STD.	36	5/8	7/8	2 1/4	17 3/8	8	6C	6C	7/8	4 3/16
SPECIAL	48	3/4	1 1/4	3	23 1/8	10 11/16	8B	8C	1 3/16	6 3/8

(ALL DIMENSIONS SHOWNIN INCHES EXCEPT WHERE NOTED)

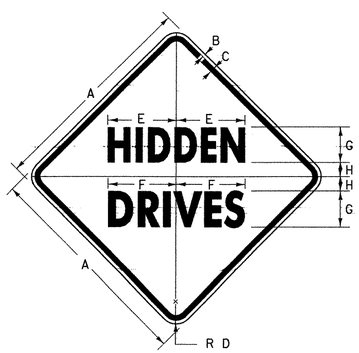

VW-060

SIGN	DIMENSIONS (INCHES)							
	A	B	C	D	E	F	G	H
PATH	18	3/8	1/2	1 1/8	5 3/4	5 1/2	3C	1 1/8
MIN.	24	3/8	5/8	1 1/2	7 11/16	7 5/8	4C	2
STD.	30	1/2	3/4	1 7/8	9 9/16	9 1/2	5C	2
EXPWY.	36	5/8	7/8	2 1/4	11 1/2	11 7/16	6C	2 3/8
SPECIAL	48	3/4	1 1/4	3	15 3/8	15 1/4	8C	3 3/16

VW-622

• REDUCE SPACING 50%

SIGN	DIMENSIONS (INCHES)								
	A	B	C	D	E	F	G	H	J
MIN.	24	3/8	5/8	1 1/2	11 9/16	5 5/16	2 11/16	3 5/16	4C
STD.	30	1/2	3/4	1 7/8	14 7/16	6 11/16	3 5/16	4 3/16	5C
SPECIAL	36	5/8	7/8	2 1/4	17 3/8	8	4	5	6C

NOTES

DESIGN

LETTERS, DIGITS, ARROWS, SYMBOLS, SPACINGS AND TEXT SHALL CONFORM WITH THE 'STANDARD HIGHWAY SIGNS BOOK' AND DESIGNS PRESCRIBED IN THE MANUAL ON UNIFORM TRAFFIC CONTROL DEVICES (MUTCD) ADOPTED BY THE U.S. DEPARTMENT OF TRANSPORTATION, FEDERAL HIGHWAY ADMINISTRATION (FHWA).

MATERIALS

THE SIGN BASE MATERIALS USED FOR THE WARNING SIGNS SHOWN ON THIS SHEET MAY BE ANY OF THE FOLLOWING, OF THE MINIMUM THICKNESS NOTED:

	18" x 18"	24" x 24" 30' x 30'	36" x 36"	48" x 48"
FLAT SHEET ALUMINUM	0.060"	0.080"	0.100"	0.125"

REFLECTORIZATION

THE BACKGROUND RETROREFLECTIVE MATERIAL SHALL BE ASTM TYPE III, TYPE VIII, OR TYPE IX RETROREFLECTIVE SHEETING APPLIED TO THE ENTIRE SIGN.
THE TEXT, BORDER, AND SYMBOLS SHALL BE LETTERING FILM OR SILK SCREENED.

COLORS

ALL OF THE WARNING SIGNS SHOWN ON THIS SHEET SHALL HAVE BLACK TEXT AND SYMBOLS ON RETROREFLECTORIZED YELLOW BACKGROUND, UNLESS OTHERWISE NOTED. THE COLORS SHALL CONFORM WITH THE COLORS ADOPTED BY AASHTO AND APPROVED BY THE FHWA.

SPECIFICATIONS

WARNING SIGNS SHALL MEET THE VERMONT STANDARD SPECIFICATIONS FOR CONSTRUCTION 'TRAFFIC SIGNS'.

OTHER STDS. REQUIRED:

REVISIONS AND CORRECTIONS

AUG. 08, 1995 - DATE OF ORIGINAL ISSUE

MAY 01, 2004 - CHANGED REFLECTIVE SHEETING TO TYPE III
MINOR NOTE CHANGES ADDED PATH DIMENSIONS

APPROVED

DIRECTOR OF PROGRAM DEVELOPMENT

TRAFFIC OPERATIONS ENGINEER

FEDERAL HIGHWAY ADMINISTRATION

WARNING SIGN DETAILS

VERMONT AGENCY OF TRANSPORTATION

STANDARD
E-154

GUARDRAIL DEFLECTION CHART

(PER AASHTO - ROADSIDE DESIGN GUIDE - LATEST EDITION)

TYPE	GR POST SPACING	DEFLECTION
THREE CABLE W/STEEL POSTS	16′ - 0″	11′ - 6″
W/WOODEN POSTS	12′ - 6″	11′ - 6″
W-BEAM W/STRONG POST	6′ - 3″	3′
BOX BEAM	6′ - 0″	5′
THRIE BEAM W/STRONG POST	6′ - 3″	2′

THIS CHART LISTS THE THEORETICAL MAXIMUM DEFLECTION DISTANCE, UPON IMPACT, OF DIFFERENT TYPES OF GUARDRAIL AND VARIOUS POST SPACINGS.

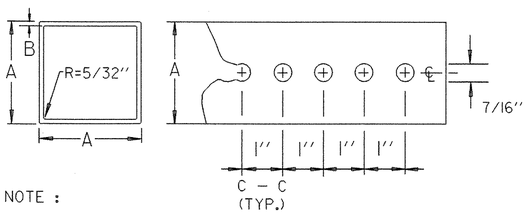

NOTE :

THE POSTS SHALL BE CAREFULLY FORMED OF STEEL WITH A MINIMUM YIELD OF 55,000 PSI, INTO A SIZE AND SHAPE WITH CORNERS INDUCTION WELDED IN SUCH A MANNER THAT NEITHER FLASH NOR WELD SHALL INTERFERE WITH THE TELESCOPING PROPERTIES, NOR DAMAGE THE GALVANIZING.

* THE WALL THICKNESS TOLERANCES SHALL BE +.005″ AND -.010″ FOR THE 12 GAUGE.
* THE WALL THICKNESS TOLERANCES SHALL BE +.002″ AND -.008″ FOR THE 14 GAUGE.

DIMENSION DETAILS AND POST SELECTION CHART

POST SELECTION CHART

SIGN AREA (FT^2) X H (FT) ≤ SV (SELECTION VALUE)

POST SIZE	DIMENSIONS			SECTION MODULUS IN^3	ONE POST S v	TWO POST S v	THREE POST S v	NUMBER PERMITTED IN 8′ PATH
LBS/FT.	A	*B	GAUGE					
1.88	1-3/4″	.083	14	0.230	46	92	138	TWO
2.42	2″	.083	12	0.380	77	154	231	TWO
3.35	2-1/2″	.105	12	0.642	130	260	390	ONE

DESIGN CRITERIA:

WIND SPEED = 70 MPH (10 -YEAR MEAN RECURRENCE INTERVAL)
WIND PRESSURE = 19 PSF
STEEL MINIMUM YIELD = 55,000 PSI
ALLOWABLE STRESS = (1.4) 0.60 FY

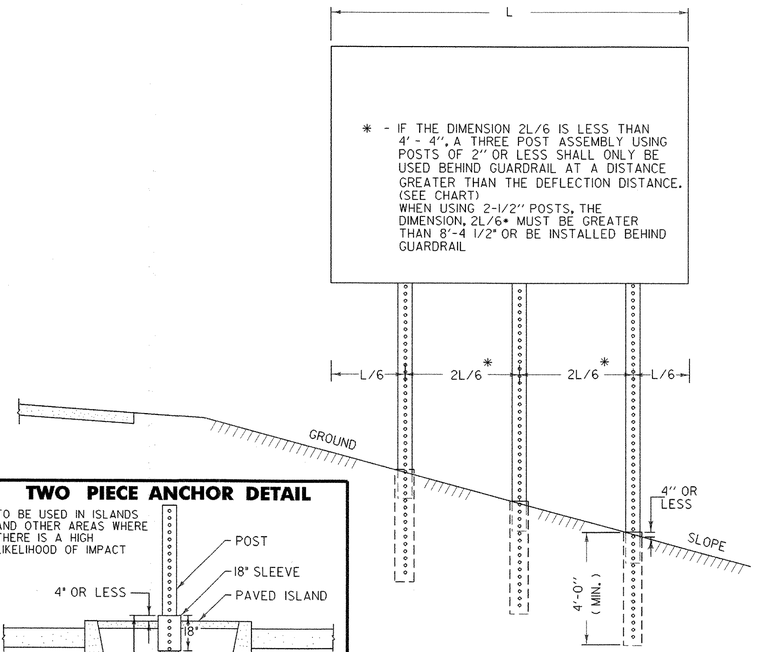

MULTI-POST INSTALLATIONS

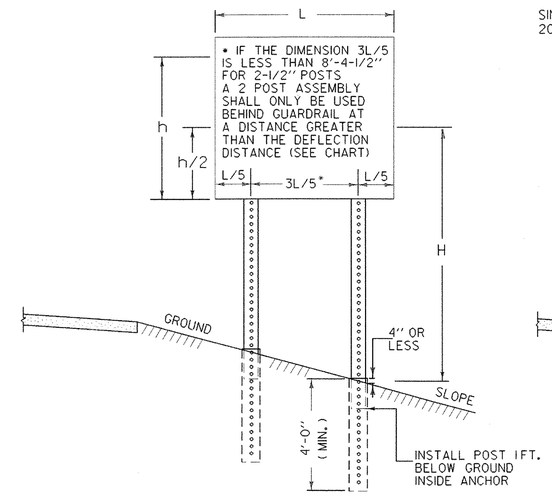

POST SPACING DETAILS

GENERAL NOTES

CONSTRUCTION METHODS - POSTS MAY BE DRIVEN OR SET IN A DUG HOLE AND BACKFILLED. IF DRIVEN, A DRIVING CAP SHALL BE USED. THE DUG HOLE INSTALLATION SHALL BE USED IN AREAS OF POOR SOIL CONDITIONS OR AS DIRECTED BY THE RESIDENT ENGINEER. BACKFILL SHALL BE COMPACTED AS DIRECTED BY THE RESIDENT ENGINEER.

SIGN CLEARANCES - HORIZONTAL AND VERTICAL SIGN CLEARANCES SHALL BE SHOWN ON THE PLANS OR THE APPROPRIATE STD. SHEETS.

SINGLE POST INSTALLATIONS SHALL BE LIMITED TO A SIGN AREA OF 20 SQ. FT. OR LESS

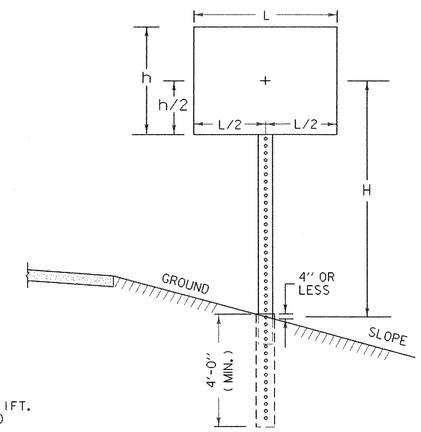

NOTE

WHEN USING SQUARE STEEL POSTS ON STEEP SLOPES (1 ON 2 OR STEEPER) ADD ONE FOOT EMBEDMENT FOR GREATER STABILITY.

TWO PIECE ANCHOR DETAIL

TO BE USED IN ISLANDS AND OTHER AREAS WHERE THERE IS A HIGH LIKELIHOOD OF IMPACT

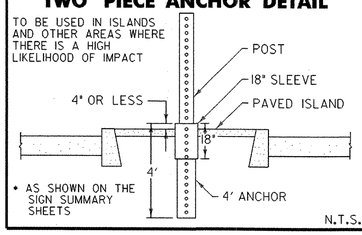

* AS SHOWN ON THE SIGN SUMMARY SHEETS

N.T.S.

TOP VIEW OF ANCHOR, POST AND BOLT

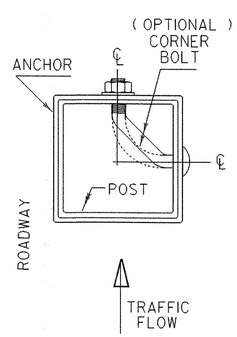

OPTIONAL CORNER BOLT DETAILS

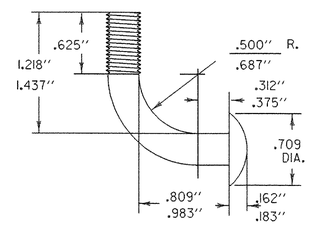

FOR 1-3/4″ TO 2-1/2″ SQ. TUBE BOLT SIZE VARIES WITH POST SIZE

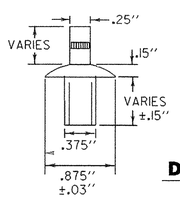

THIS DRIVE RIVET MAY BE SUBSTITUTED FOR EITHER OF THE CORNER BOLTS SHOWN ABOVE OR TO THE RIGHT.

DRIVE RIVET

DOUBLE DIMENSIONS REFER TO TWO ALTERNATE BOLT SIZES.

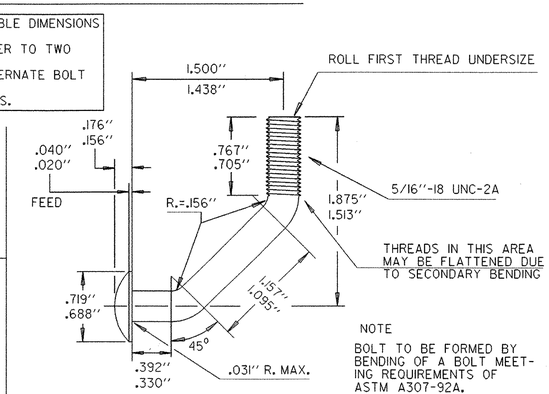

NOTE

BOLT TO BE FORMED BY BENDING OF A BOLT MEETING REQUIREMENTS OF ASTM A307-92A.

* DIMENSIONS VARY AS NEEDED FOR POST SIZE USED

CONNECTION DETAIL

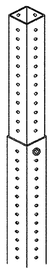

POST IS TO BE INSERTED INTO ANCHOR ONE FOOT BELOW GROUND LEVEL. ANCHOR IS TO BE 4′-0″ MINIMUM LENGTH WITH NO MORE THAN 4″ ABOVE GROUND. ANCHOR IS ONE SIZE (1/4″) GREATER THAN THE POST AND ALL ANCHORS ARE TO BE 12 GAGE, EXCEPT ANCHORS FOR 2-1/2″ POSTS ARE TO BE 3″ AND 7 GAGE. CONNECTION IS TO BE MADE USING THE BOLT PROVIDED WITH THE SIGN SYSTEM (SEE DETAILS LEFT). AT THE TOP HOLE IN THE ANCHOR (APPROXIMATELY 3-1/2″ ABOVE GROUND). THREE INCH ANCHORS WHICH DO NOT HAVE HOLES ON 1″ CENTERS WILL REQUIRE DRILLING OF 7/16″ HOLES FOR CONNECTIONS.

(SEE DETAIL LEFT FOR BOLT PLACEMENT)

OTHER STDS. REQUIRED E-120, E-160

REVISIONS AND CORRECTIONS

APR. 27, 1994 - ORIGINAL APPROVAL DATE
JUL. 21, 1994 - REVISED POST GAUGES
AUG. 18, 1995 - ADDED TWO PIECE ANCHOR DETAIL
MAR. 26, 1996 - REVISED POST SELECTION CHART
MAY 20, 1999 - REPLACE LOST ORIGINAL
JUN. 08, 2009 - POST SELECTION REVISIONS

APPROVED

Kevin S. Marshia
HIGHWAY, SAFETY & DESIGN ENGINEER

Richard Tetreault
DIRECTOR OF PROGRAM DEVELOPMENT

Mark D. Richter
FEDERAL HIGHWAY ADMINISTRATION

SQUARE STEEL SIGN POST

/traf/english/std/el64.dgn

VERMONT AGENCY OF TRANSPORTATION

STANDARD
E-164

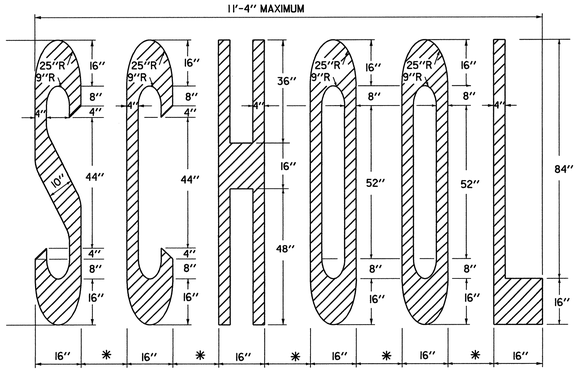

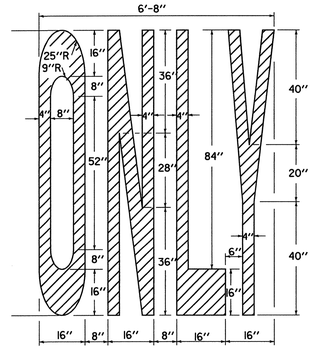

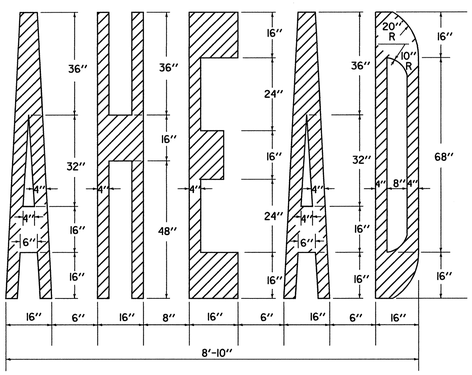

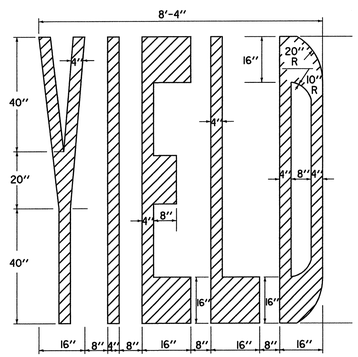

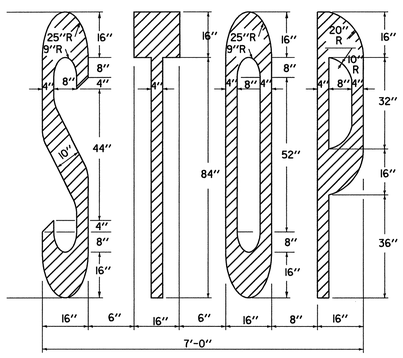

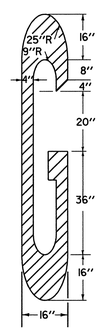

THE LETTER "G" PERTAINS TO THE WORD "SIGNAL" FOR OTHER LETTERS, SEE ABOVE.

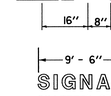

6" LETTER SPACING

LETTER HEIGHT

DIMENSIONS ARE FOR 8' - 4" LETTER HEIGHTS. A LESSER HEIGHT OF 8' - 0" IS ACCEPTABLE AS LONG AS THE DIMENSIONS ARE PROPORTIONAL TO THE DETAILS SHOWN SEE NOTE BELOW.

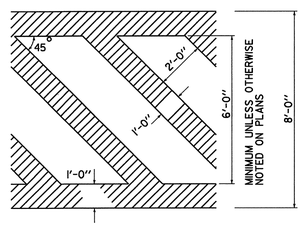

ARROWS AND WORD MARKINGS THAT CONFORM TO THE DIMENSIONS SHOWN ON THIS SHEET OR AS DETAILED IN THE BOOKLET ENTITLED "STANDARD ALPHABETS FOR HIGHWAY SIGNS AND PAVEMENT MARKINGS" AND THE "MANUAL ON UNIFORM TRAFFIC CONTROL DEVICES" (CURRENT EDITION) PREPARED BY THE FEDERAL HIGHWAY ADMINISTRATION WILL BE ACCEPTABLE.

LETTER IN WORD MARKING AND CROSSWALK DETAILS

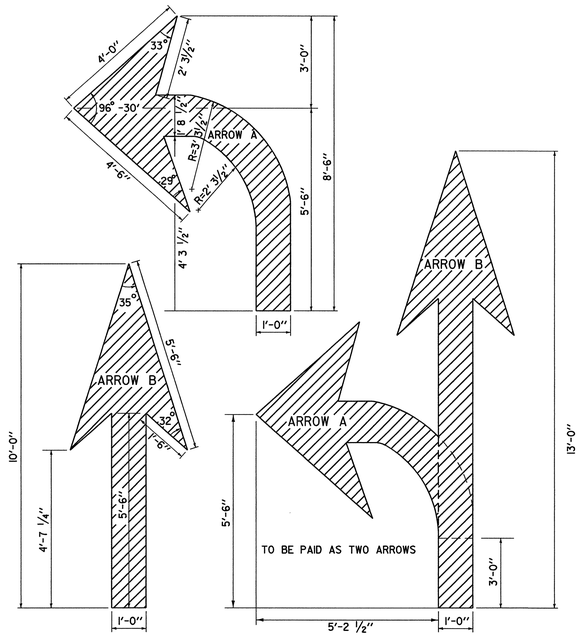

ARROW DETAILS

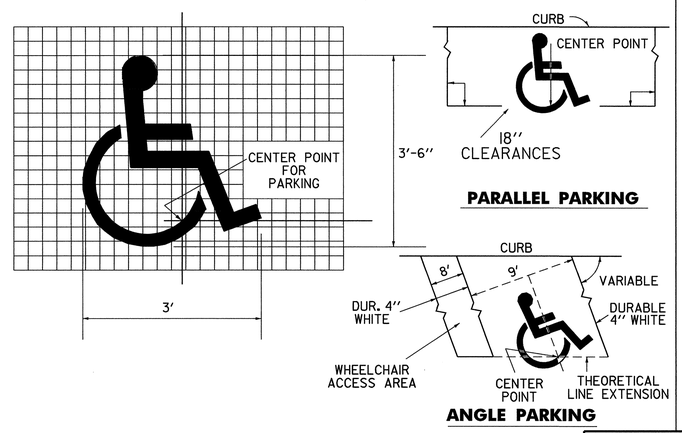

HANDICAPPED PAVEMENT MARKING DETAILS

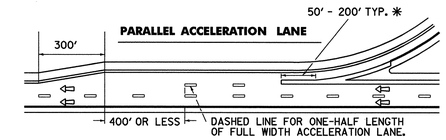

* USE LONGER LENGTH TO EMPHASIZE SITUATIONS WHERE THE CROSSING REQUIRES UNUSUAL CARE SUCH AS HIGH VOLUME MERGE AREAS.

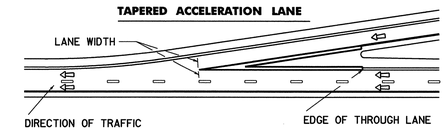

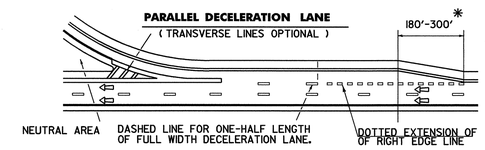

* SHORTER TAPERS GIVE A BETTER TARGET VALUE, HOWEVER ALIGNMENT MAY DICTATE A LONGER TAPER. RESIDENT ENGINEER SHALL ESTIMATE LENGTH.

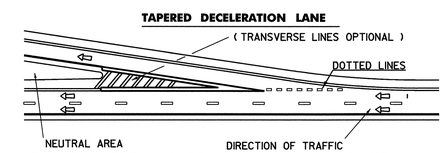

TRANSVERSE LINES SHALL CONSIST OF A WHITE LINE 2 TIMES WIDER THAN THE MAIN LINE MARKING WIDTH SPACED 5'-0" C-C AND SET AT 45° TO MAIN LINE EDGE LINES. THESE MARKINGS SHALL BE USED TO INCREASE VISIBILITY DUE TO DIFFICULT VERTICAL OR HORIZONTAL ALIGNMENT, AS DIRECTED BY THE RESIDENT ENGINEER.

RAMP MARKINGS

LEGEND

- WHITE LINES
- YELLOW LINES
- CHANNELIZATION WHITE LINES
- WHITE DOTTED LINES (2' SOLID - 4' GAP)
- DIRECTION OF TRAFFIC FLOW

IMPORTANT NOTE
ACTUAL LOCATION OF GORE MARKING TRANSITION CURVE MUST BE OFFSET FROM THE THEORETICAL RAMP EXTENSION LINE TO PROVIDE A VISUALLY SMOOTH RAMP ENTRANCE.

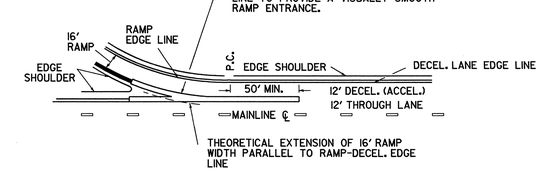

DETAIL - GORE MARKING TRANSITION CURVE

THIS SHEET IS NOT TO SCALE

OTHER STDS. REQUIRED

REVISIONS AND CORRECTIONS

SEPT. 10, 1987 - DATE OF ORIGINAL ISSUE
JAN. 23, 1989 - ADDED DOTTED LINES, "SIGNAL" DIMENSIONS, CLARIFIED LETTER HEIGHT.
AUG. 18, 1995 - MISC. NOTE CHANGES
FEB. 1, 1999 - CHANGED NOTES FOR ACCELERATION & DECELERATION LANES

APPROVED

Robert F. Stallmeyer Acting
DIRECTOR OF PROJECT DEVELOPMENT

PAVEMENT MARKING DETAILS

/traf/std/stdel91.dgn/stdel91.1

VERMONT AGENCY OF TRANSPORTATION

STANDARD E-191

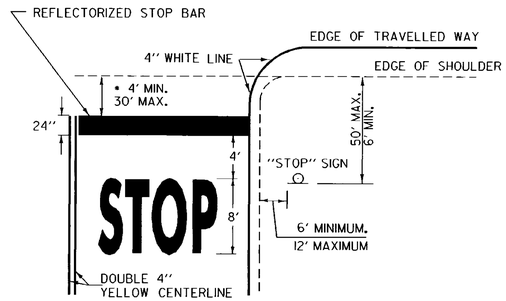

• THE "DESIRED STOPPING POINT" IS THE LOCATION BASED ON SITE CONDITIONS THAT BEST ALLOWS THE STOPPED VEHICLE TO VIEW THE APPROACHING TRAFFIC.

STOP BAR LAYOUT

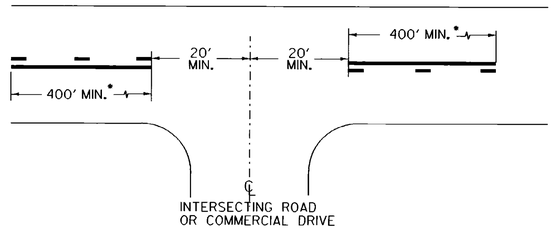

• THE SOLID LINE SHALL BE PAIRED WITH EITHER A SOLID OR DASHED LINE DEPENDING ON SIGHT DISTANCE AVAILABILITY IN THE OPPOSING DIRECTION. ADJUSTMENTS TO THE 40 FOOT CENTERLINE OPENING MAY BE MADE TO ACCOMMODATE SKEWED INTERSECTIONS.

CENTERLINE BREAKES:

A. AT ALL STATE HIGHWAYS AND TOWN HIGHWAYS, INCLUDING CLASS 4 TH'S. THAT HAVE STOP AND LEGAL LOAD LIMIT SIGNS INSTALLED

B. COMMERCIAL DRIVES:
1. WHERE A SEPERATE TURN LANE EXISTS ON THE MAIN LINE (LT. OR RT.)
2. SIGNIFICANT TRAFFIC VOLUMES EXISTS.
3. IF MOTORISTS NEED ASSISTANCE TO DEFINE ENTRANCE POINTS.

CENTERLINE LAYOUT

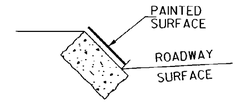

GRANITE SLOPE EDGING

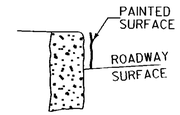

VERTICAL GRANITE CURB

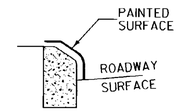

TYPE A (CONCRETE)

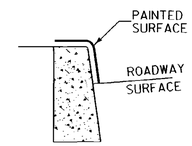

TYPE B (CONCRETE)

PAINTED CURB

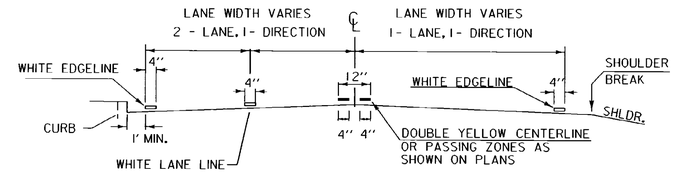

PAVEMENT MARKING PLACEMENT DETAIL

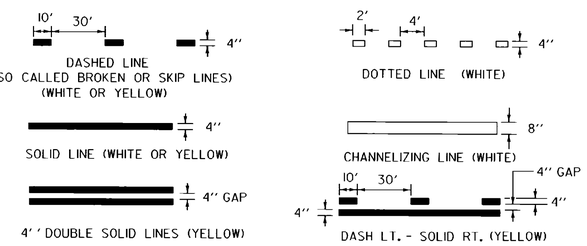

PAVEMENT MARKING LINE DETAILS

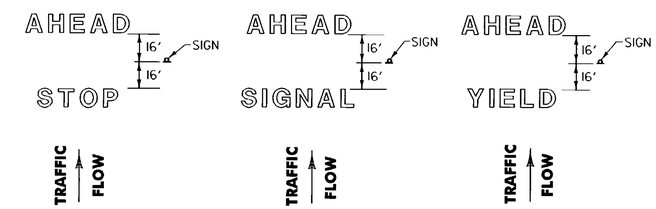

LETTER IN WORD MARKING SPACING DETAIL

NOTE: SINGLE WORDS CENTERED ON SIGN ie: SCHOOL OR YIELD

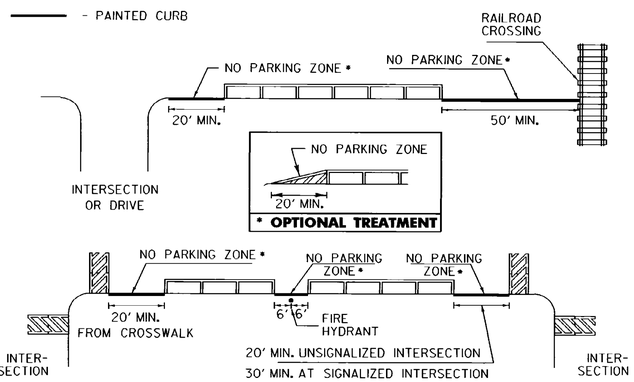

NO PARKING LAYOUT DETAILS

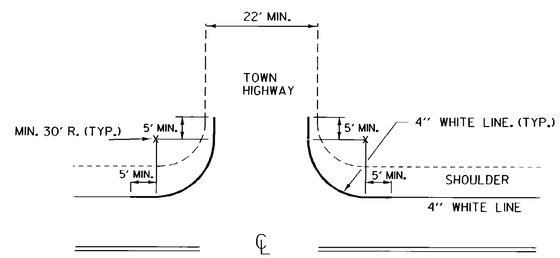

EDGELINES SHALL BE APPLIED TO ALL STATE HIGHWAYS AND SHOULD BE MAINTAINED AT A CONSTANT DISTANCE FROM THE CENTERLINE UNLESS PAVEMENT WIDTH INCREASES TO ALLOW WIDER LANES.

APPLY EDGELINE AS DETAILED ON ALL PAVED CLASS 1 & CLASS 2 TOWN HIGHWAYS AND ANY CLASS 3 TOWN HIGHWAY 22 FEET OR MORE IN WIDTH.

IF MIN. 30 FOOT RADIUS CANNOT BE OBTAINED, OR THE TOWN HIGHWAY IS NOT PAVED, BREAK THE EDGELINE USING AN 80 FOOT GAP AT INTERSECTION.

EDGELINE LAYOUTS

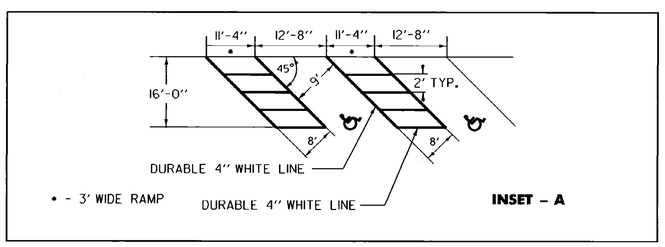

NOTE:

SEE STANDARD SHEET E-191 FOR HANDICAP SYMBOL POSITIONING AND DETAIL.

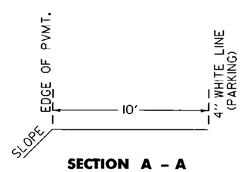

SECTION A - A

TRUCK PARKING DETAIL

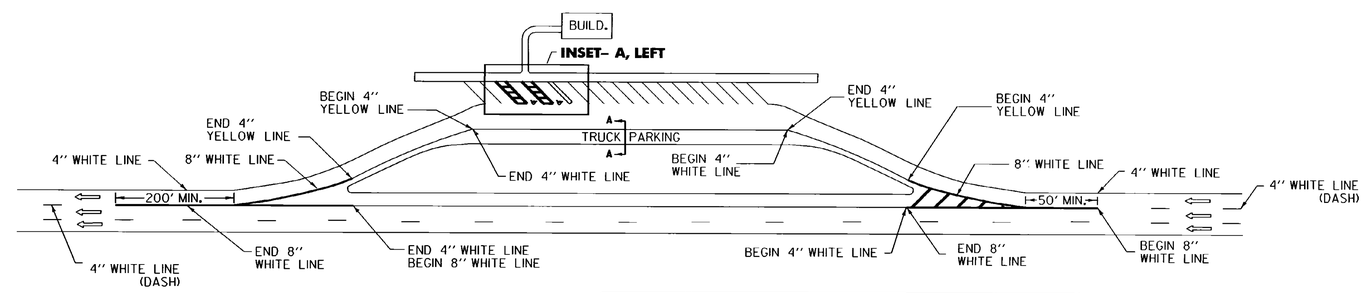

REST AREA PARKING DETAILS

THIS SHEET IS NOT TO SCALE

OTHER STDS. E - 191, E - 192 REQUIRED

REVISIONS AND CORRECTIONS

AUG. 18, 1995 - DATE OF ORIGINAL ISSUE

APPROVED FOR THIS PROJECT AND/OR DESIGN IMPLEMENTATION. FHWA FINAL APPROVAL PENDING.

APPROVED

DIRECTOR OF ENGINEERING

TRAFFIC AND SAFETY ENGINEER

PAVEMENT MARKING DETAILS

/traf/std/stdel93.dgn/stdel93.i

VERMONT AGENCY OF TRANSPORTATION

STANDARD

E-193

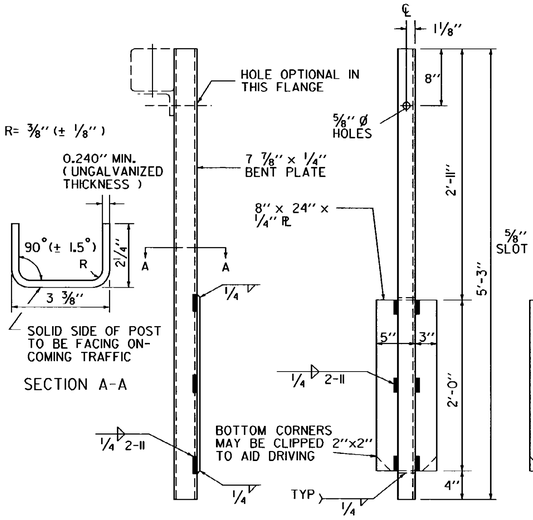

ALTERNATE POST (BENT PLATE)
(STD. HM-TF-13 P-49-76)

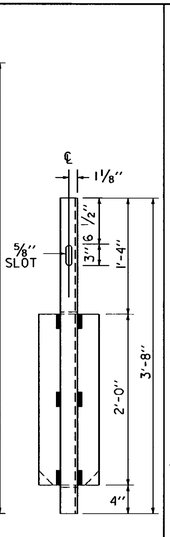

END POST DETAIL

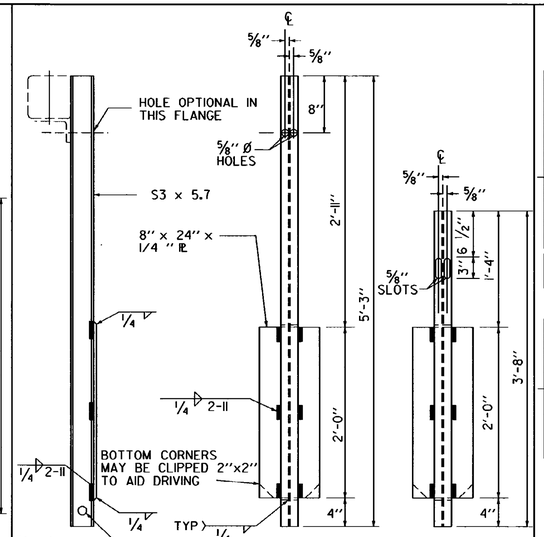

S3 X 5.7 POST
(STD. HM-TF-13 P-4-76)

END POST DETAIL

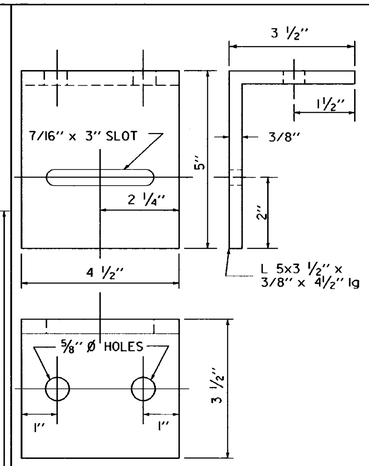

RAIL SUPPORT ANGLE
(STD. HM-TF-13 P-5-76)

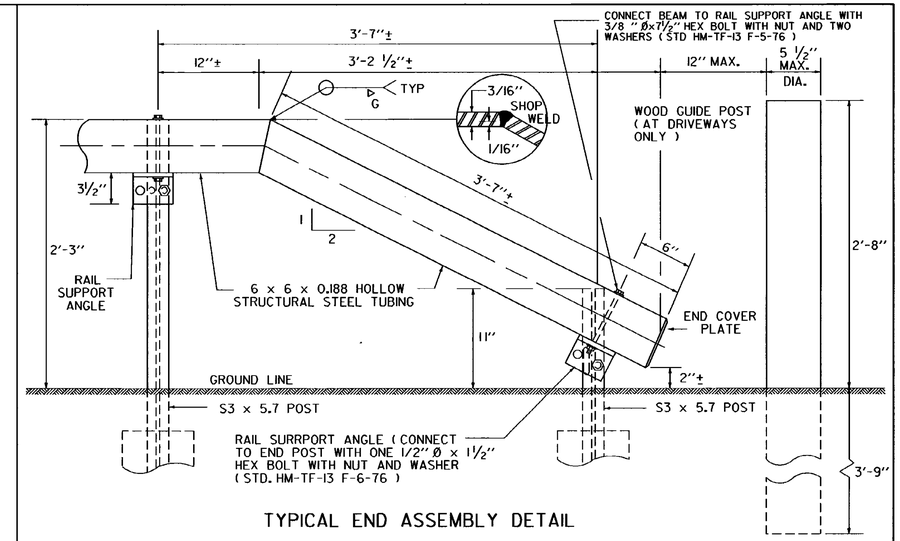

TYPICAL END ASSEMBLY DETAIL

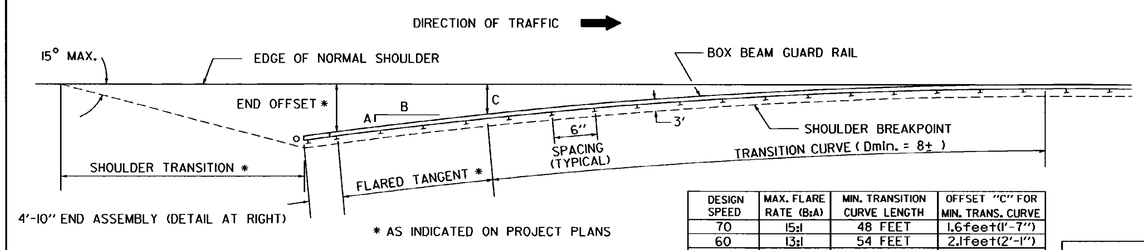

DESIGN SPEED	MAX. FLARE RATE (B:A)	MIN. TRANSITION CURVE LENGTH	OFFSET "C" FOR MIN. TRANS. CURVE
70	15:1	48 FEET	1.6feet(1'-7")
60	13:1	54 FEET	2.1feet(2'-1")
50	11:1	66 FEET	3.0feet(3'-0")
40	9:1	78 FEET	4.3feet(4'-4")

PLAN OF FLARED APPROACH

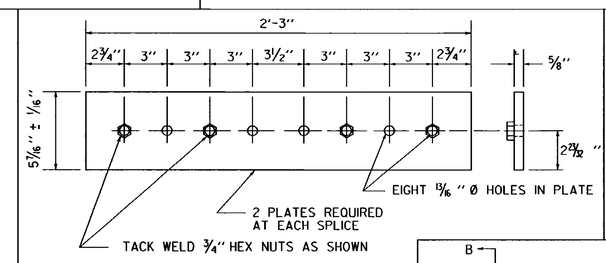

SPLICE PLATE DETAIL
(STD. HM-TF-13 RE-11-73)

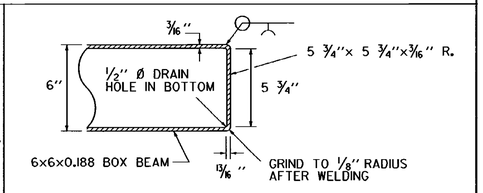

END COVER PLATE DETAIL

GENERAL NOTES

1. THE DESIRED APPROACH END OFFSET SHOULD BE AT LEAST 8' FROM THE EDGE OF NORMAL SHOULDER WHERE SPACE PERMITS; IN SPECIAL CASES, THE END OFFSET MAY BE REDUCED. IN NO CASE, HOWEVER, WILL THE END OFFSET BE LESS THAN 4'.
2. POST SPACING WILL BE 6'-0" C-C, EXCEPT IN THE VICINITY OF THE JUNCTION OF BOX BEAM GUARD RIAL AND BRIDGE RAILING, AND AT OTHER LOCATONS INDICATED ON THE PLANS. AT BRIDGE APPROACHES, THE 50' SECTION ADJACENT TO THE BRIDGE RAILING WILL HAVE A POST SPACING OF 4'-0" C-C.
3. FOR MATERIAL REQUIREMENTS AND CONSTRUCTION DETAILS SEE SPECIFICATIONS FOR BOX BEAM GUARD RAIL.
4. RAIL ALIGNMENT TO BE STRAIGHT AT SPLICES. NO LATERAL BENDS PERMITTED WITHIN THE SPLICE. THIS DOES NOT PRECLUDE THE SHOP FABRICATION OF BENT SPLICES.
5. THE LINE OF BOX BEAM GUARD RAIL WHEN COMPLETED SHALL PRESENT A SMOOTH AND PLEASING GRADE LINE IN BOTH HORIZONTAL AND VERTICAL PLANES.
6. ALL POSTS IN A GIVEN RUN TO BE OF THE SAME TYPE.

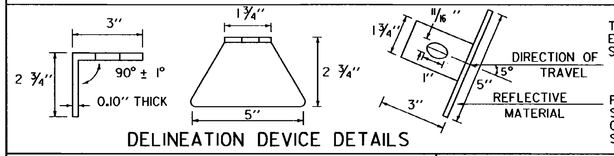

DELINEATION DEVICE DETAILS

THIS REFLECTORIZED ALUMINUM DELINEATION DEVICE IS TO BE ERECTED EVERY 36 FEET, AT SPLICES. DELINEATOR SHALL MEET SPECIFICAITON REQUIRMENTS FOR ASTM B209 ALLOY 5052-H32.

REFLECTIVE MATERIAL SHALL MEET THE REQUIREMENTS OF SUBSECTION 750.09 AND SHALL BE OF ENCAPSULATED LENS SILVER OR AMBER. AMBER IS TO BE INSTALLED ON THE LEFT OR MEDIAN SIDE OF INTERSTATE ROADWAYS OR RAMPS.

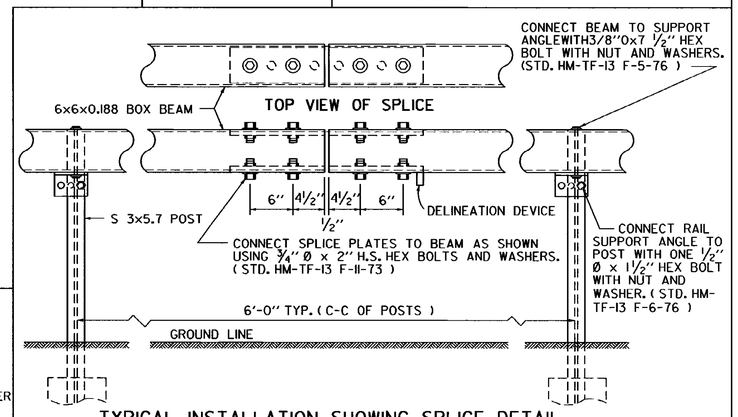

TYPICAL INSTALLATION SHOWING SPLICE DETAIL

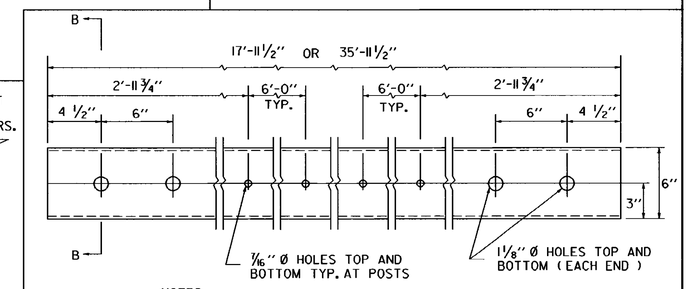

NOTES:

1. RAIL SECTIONS FOR TANGENT RUNS WILL BE EITHER 17'-11 1/2" OR 35'-11 1/2" IN LENGTH.
2. ON CURVES, CHORD LENGTHS WILL BE NO LESS THAN 12 FEET.
3. FOR CURVES GREATER THAN 8°, RAIL SECTIONS SHALL BE SHOPFORMED TO THE REQUIRED CURVATURE. PAYMENT OF SUCH SHOP WORK WILL BE CONSIDERED TO BE SUBSIDIARY TO BOX BEAM GUARD RAIL.
4. WELD OR GALVANIZING PROTRUSIONS WILL NOT BE PERMITTED ON TOP OR BOTTOM INSIDE WALLS IN SPLICE AREA.

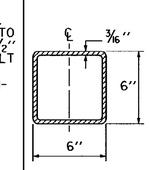

SECTION B-B

6x6x0.188 BOX BEAM RAIL ELEMENT
(STD. HM-TF-13 RE-10-76)

REVISIONS AND CORRECTIONS

OCT. 17, 1979- ORIGINAL APPROVAL DATE
JULY 23, 1980- CHANGED DIAMETER OF GUIDE POST
DEC. 16, 1980- INCREASED SHOULDER WIDENING FOR GUARD RAIL
JUNE 17, 1984- DELINEATOR DEVICE ADDED
DEC. 21, 1984- HEIGHT OF RAIL LOWERED FROM 2'-6" TO 2'-3"
OCT. 31, 1985- REVISED TO CONFORM TO 1986 SPECIFICATIONS
JUNE 1, 1994 - REISSUED, WITHOUT CHANGE, UNDER NEW SIGNATURES.

APPROVED

APPROVED FOR THIS PROJECT AND/OR DESIGN IMPLEMENTATION. FHWA FINAL APPROVAL PENDING.

Gordon B. MacArthur, P.E.
DIRECTOR OF ENGINEERING

Robert M. Murphy, P.E.
DESIGN ENGINEER

BOX BEAM GUARD RAIL

VERMONT AGENCY OF TRANSPORTATION

STANDARD
G-1b

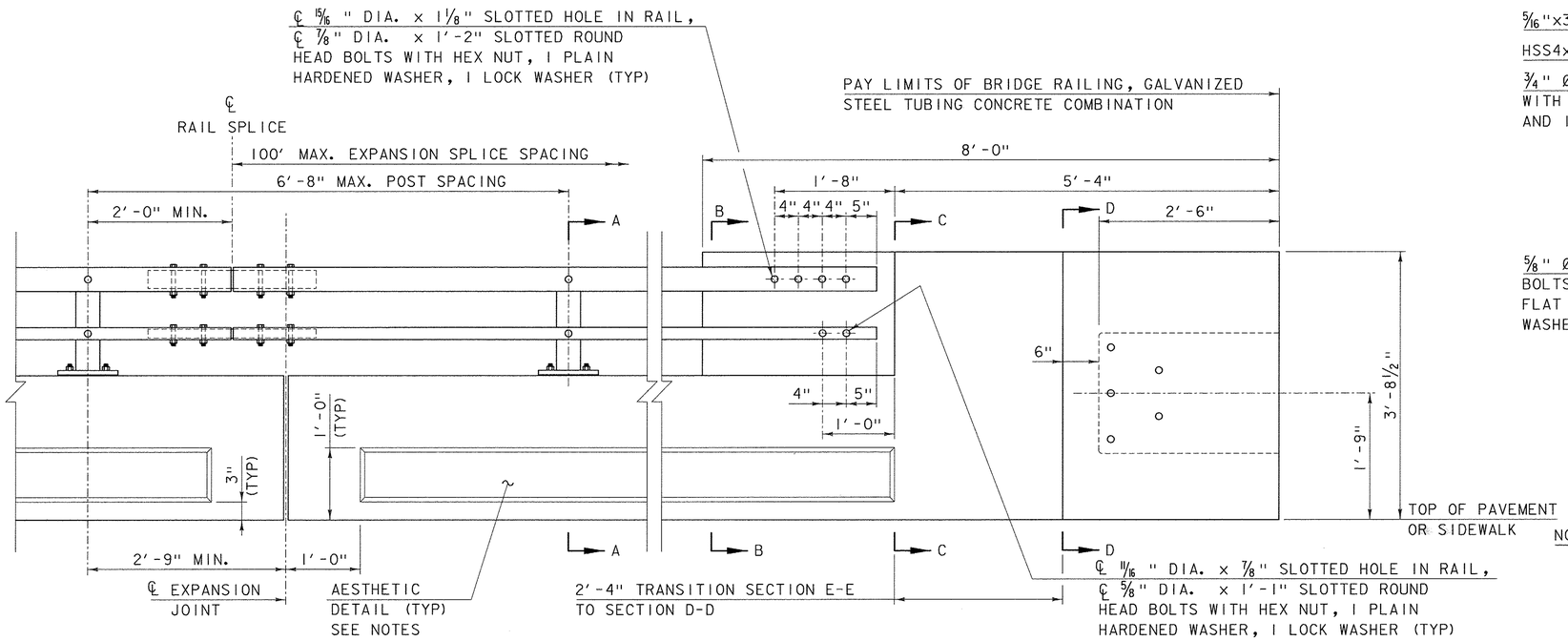

RAILING & END WALL APPROACH

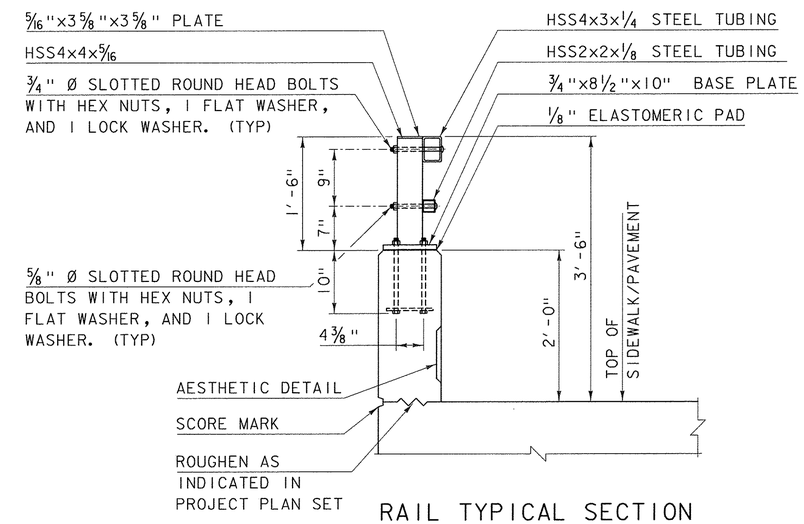

RAIL TYPICAL SECTION

NOTES:

1. ALL WORK AND MATERIALS SHALL CONFORM TO SECTION 525.
2. PRIOR TO GALVANIZING THE ASSEMBLED POST, GRIND ALL EDGES TO A MINIMUM RADIUS OF 1/16".
3. ALL POSTS SHALL BE SET NORMAL TO GRADE.
4. SECTIONS OF RAIL TUBE SHALL BE ATTACHED TO A MINIMUM OF TWO BRIDGE POSTS AND PREFERABLY TO AT LEAST 4 POSTS.
5. HOLES IN RAILS FOR TUBE ATTACHMENT MAY BE FIELD-DRILLED. HOLES SHALL BE COATED WITH AN APPROVED ZINC-RICH PAINT PRIOR TO INSTALLATION.
6. BOLTS SHALL BE TORQUED SNUG TIGHT (APPROXIMATELY 100 FT-LB).
7. RAIL TUBES SHALL BE ATTACHED USING 3/4" FULL DIAMETER BODY ASTM A 449 (TYPE I) ROUND HEAD BOLTS INSERTED THROUGH THE FACE OF THE TUBE.
8. SEE STANDARD DRAWING G-1 FOR DETAILS OF DELINEATORS. A DELINEATOR SHALL BE INSTALLED AT 30 FOOT SPACING OR THE NEAREST POST. WHITE IS TO BE INSTALLED ON THE DRIVER'S RIGHT. FOR ONE WAY BRIDGES, YELLOW IS TO BE INSTALLED ON THE DRIVER'S LEFT. PAYMENT FOR DELINEATORS SHALL BE INCIDENTAL TO OTHER ITEMS.
9. AESTHETIC TREATMENT TYPE SHALL BE APPLIED AS SPECIFIED IN THE CONTRACT PLANS. IF NONE IS SPECIFIED IT SHALL NOT BE USED. AESTHETIC TREATMENT DETAILED ON THIS SHEET MAY ALSO BE APPLIED ON THE FASCIA SIDE OF THE RAIL, IF SPECIFIED IN THE CONTRACT PLANS.
10. BRIDGE RAILING SHALL HAVE A RUBBED FINISH IN ACCORDANCE WITH SECTION 501.
11. THIS RAILING MEETS THE REQUIREMENTS FOR A NCHRP REPORT 350 TL-4 SERVICE LEVEL.

NOTE:
EF = EACH FACE
3" CLEAR, UNLESS OTHERWISE
SPECIFIED ON THE PLANS.
2'-2" BAR LAP UNLESS OTHERWISE
SPECIFIED ON THE PLANS.
*** MATCH SLOPE OF NEAREST
TRANSVERSE STEEL

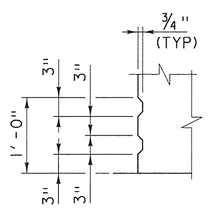

AESTHETIC DETAIL A

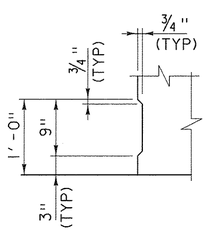

AESTHETIC DETAIL B

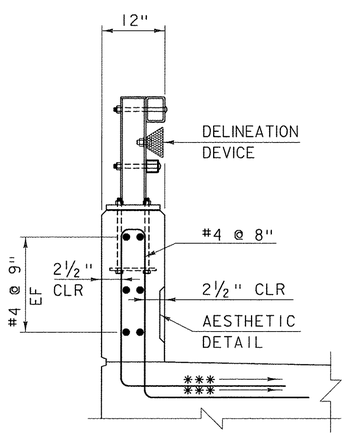

SECTION A-A

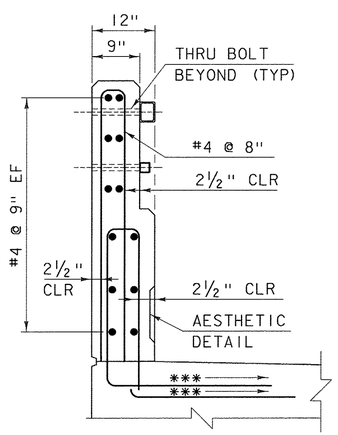

SECTION B-B

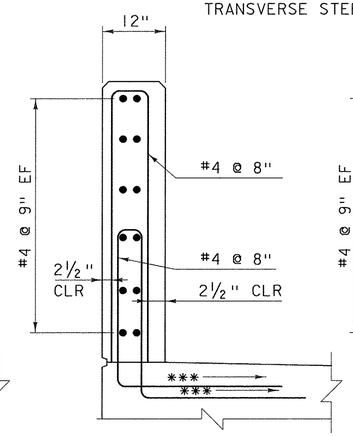

SECTION C-C

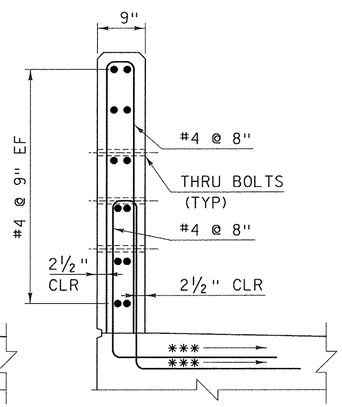

SECTION D-D

OTHER STDS. REQUIRED: G-1

REVISIONS AND CORRECTIONS

AUGUST 22, 2012 - ORIGINAL APPROVAL

APPROVED

Wm. Michael Hedges
STRUCTURES ENGINEER

Richard Fetters
DIRECTOR OF PROGRAM DEVELOPMENT

Mark D. Richter
FEDERAL HIGHWAY ADMINISTRATION

BRIDGE RAILING, GALVANIZED STEEL TUBING / CONCRETE COMBINATION

VERMONT AGENCY OF TRANSPORTATION

STANDARD S-352A

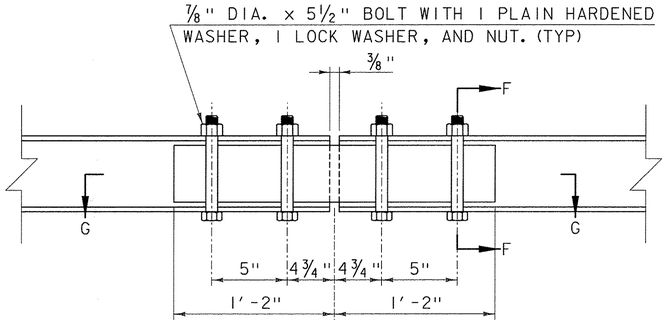

TOP RAIL FIXED SPLICE DETAIL

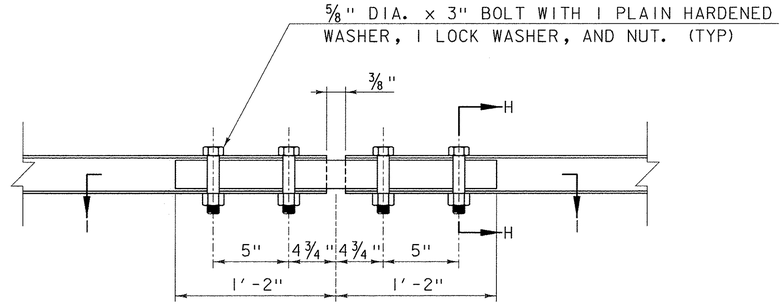

BOTTOM RAIL FIXED SPLICE DETAIL

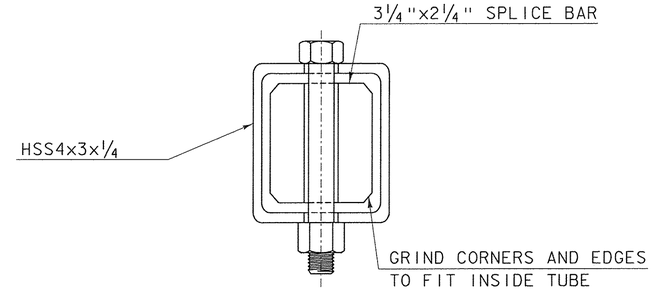

SECTION F-F

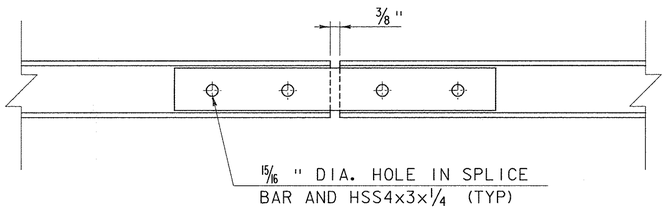

SECTION G-G

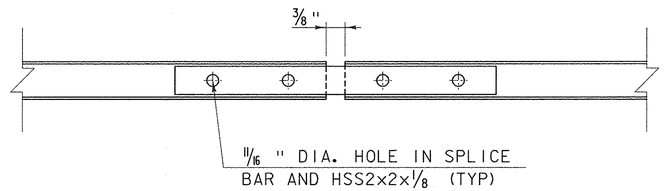

SECTION I-I

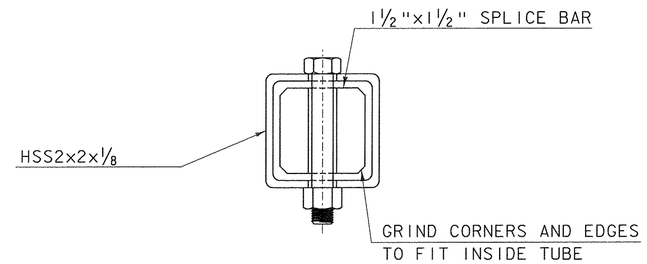

SECTION H-H

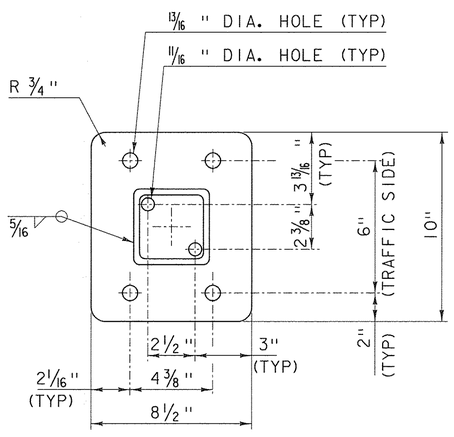

BASE PLATE

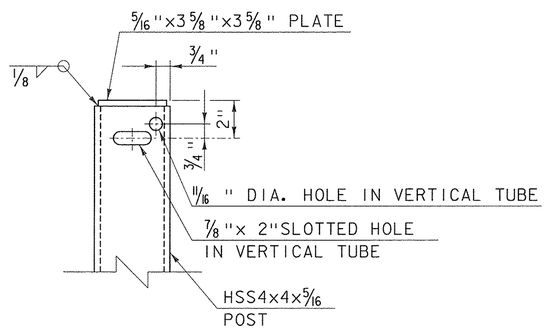

VERTICAL TUBE DETAIL
(FRONT VIEW)

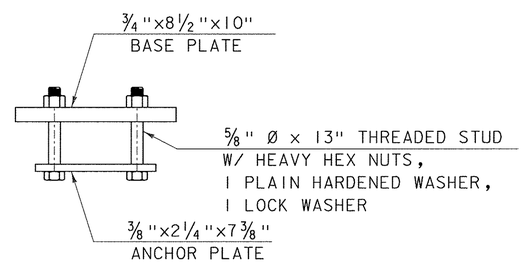

RAIL POST ANCHORAGE

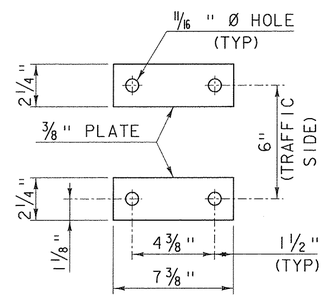

ANCHOR PLATES

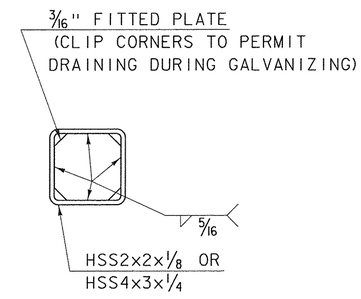

END OF RAIL DETAIL

OTHER STDS. REQUIRED: **G-1**

REVISIONS AND CORRECTIONS

AUGUST 22, 2012 - ORIGINAL APPROVAL

APPROVED

Wm. Michael Hedges
STRUCTURES ENGINEER

Richard Fetterault
DIRECTOR OF PROGRAM DEVELOPMENT

Mark D. Richter
FEDERAL HIGHWAY ADMINISTRATION

BRIDGE RAILING, GALVANIZED STEEL TUBING / CONCRETE COMBINATION

VERMONT AGENCY OF TRANSPORTATION

STANDARD
S-352B

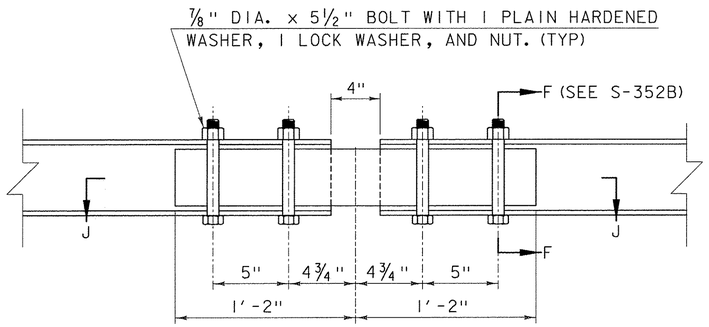

TOP RAIL EXPANSION SPLICE DETAIL

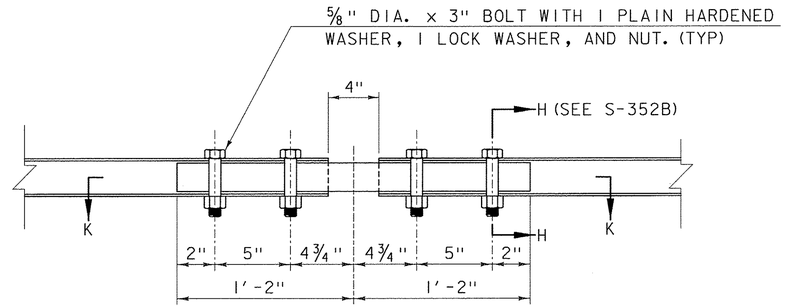

BOTTOM RAIL EXPANSION SPLICE DETAIL

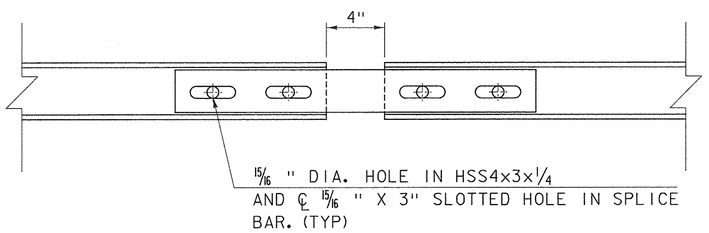

SECTION J-J

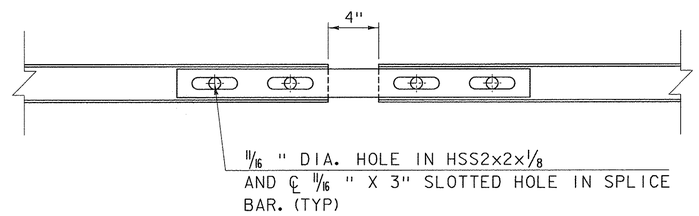

SECTION K-K

OTHER STDS. REQUIRED: G-1

REVISIONS AND CORRECTIONS

AUGUST 22, 2012 - ORIGINAL APPROVAL

APPROVED

STRUCTURES ENGINEER

DIRECTOR OF PROGRAM DEVELOPMENT

FEDERAL HIGHWAY ADMINISTRATION

BRIDGE RAILING, GALVANIZED STEEL TUBING / CONCRETE COMBINATION

VERMONT AGENCY OF TRANSPORTATION

STANDARD

S-352C