MILLER CONSTRUCTION, INC.

P.O. BOX 86 ASCUTNEY BLVD WINDSOR, VERMONT 05089-0086

TELEPHONE (802) 674-5525 / FAX (802) 674-5245

TRANSMITTAL

TO: Jennifer Fitch, PE Project Manager Vermont Agency of Transportation	DATE	PROJECT NO.
	7/17/2014	Brookfield BRF FLBR (2)

XX WE ENCLOSE THE FOLLOWING: _____ UNDER SEPARATE COVER WE ARE SENDING THE FOLLOWING

COPIES	NUMBER	DESCRIPTION	CODE
1		Deck Panel Shop Drawings - Rev 1	H

CODE:

A FOR INITIAL APPROVAL
B FOR FINAL APPROVAL
C APPROVED AS NOTED-RESUBMISSION REQUIRED
D APPROVED AS NOTED-RESUBMISSION NOT REQUIRED
E DISAPPROVED-RESUBMIT
F QUOTATION REQUESTED
G APPROVED
H FOR APPROVAL
I AS REQUESTED OR REQUIRED
J FOR USE IN ERECTION
K LETTER FOLLOWS
L FOR FIELD CHECK
M FOR YOUR USE

BY: Paul [signature]

31 Station Road
Mt. Holly, Vermont 05758
802.259.2094 *phone*
802.259.2689 *fax*
www.wrightconstruction.com

July 1, 2014

Fabrication Plan for 900.670 Special Provision (Nail Laminated Timber Deck Panel)
Brookfield BRF FLBR(2)
Brookfield, VT

Narrative of the work related to the fabrication of the deck panels.

See also following drawings and sketches.

PANEL FABRICATION

1. Fabrication of the deck panels will be done at our shop location in Mount Holly. Panels will be nailed together and holes drilled per the attached layout drawings.
2. Once fabricated, deck panels will be stored in Mount Holly until they are needed at the project for installation. When ready for installation the panels will be shipped to the job site on a flatbed trailer.

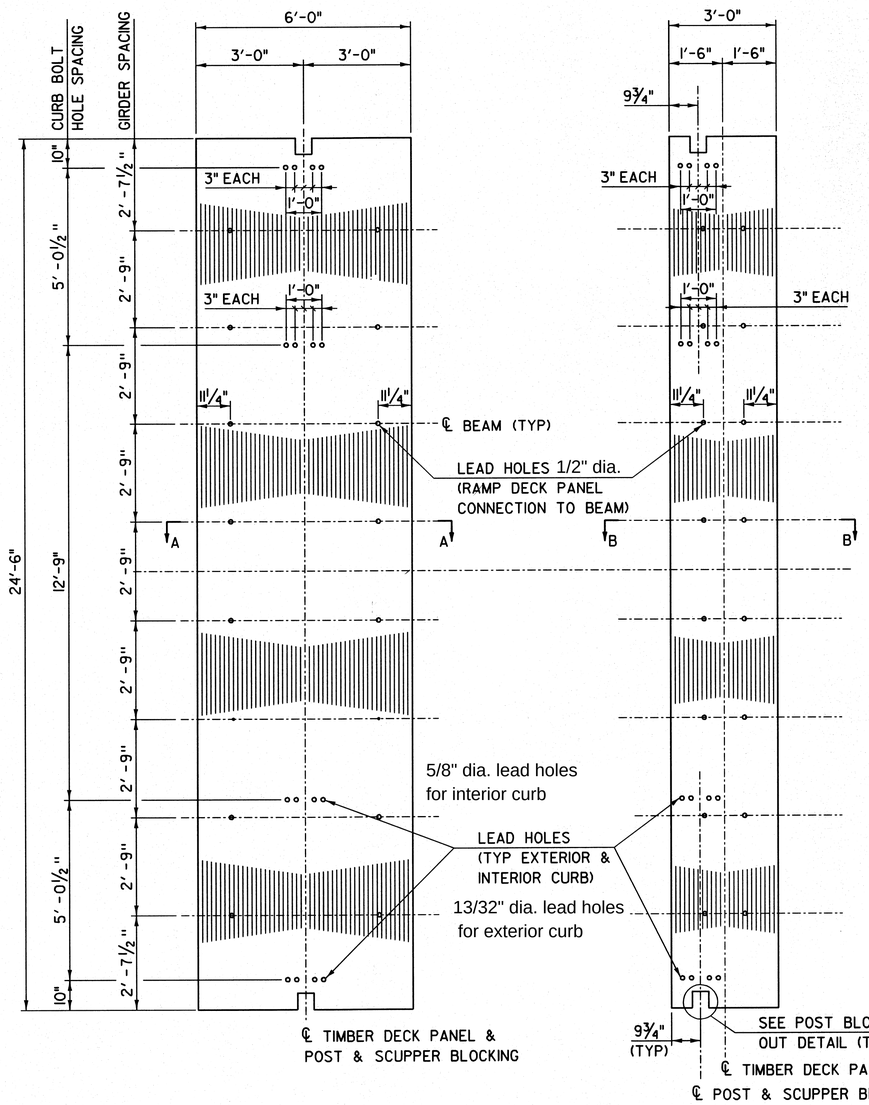

RAMP DECK
PANEL TYPE D - PLAN
SCALE: ½" = 1'-0"

RAMP DECK
PANEL TYPE E - PLAN
SCALE: ½" = 1'-0"

Expansion device hole layout shown on drawing 4.

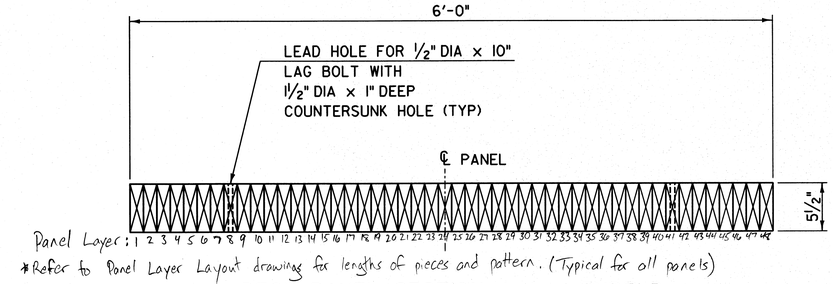

*Refer to Panel Layer Layout drawing for lengths of pieces and pattern. (Typical for all panels)

DECK PANEL SECTION A-A - TYPE D
SCALE: 1½" = 1'-0"

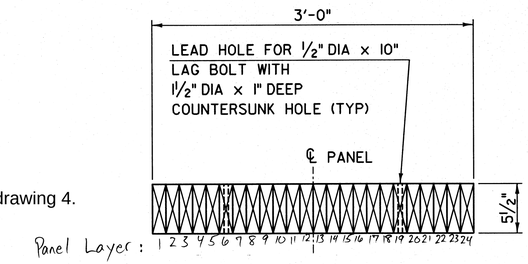

DECK PANEL SECTION B-B - TYPE E
SCALE: 1½" = 1'-0"

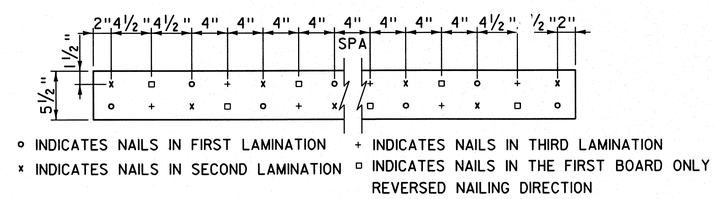

RAMP DECK PANEL - NAIL PATTERN
SCALE: 1½" = 1'-0"

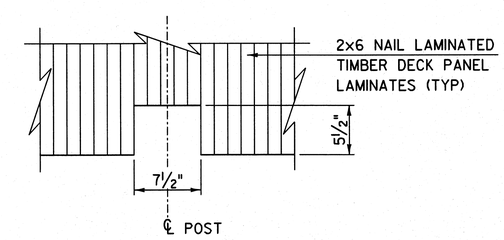

POST BLOCK OUT DETAIL
SCALE: 1½" = 1'-0"

Deck Panel Layout Fabrication Drawings

PROJECT NAME: BROOKFIELD
PROJECT NUMBER: BRF FLBR(2)

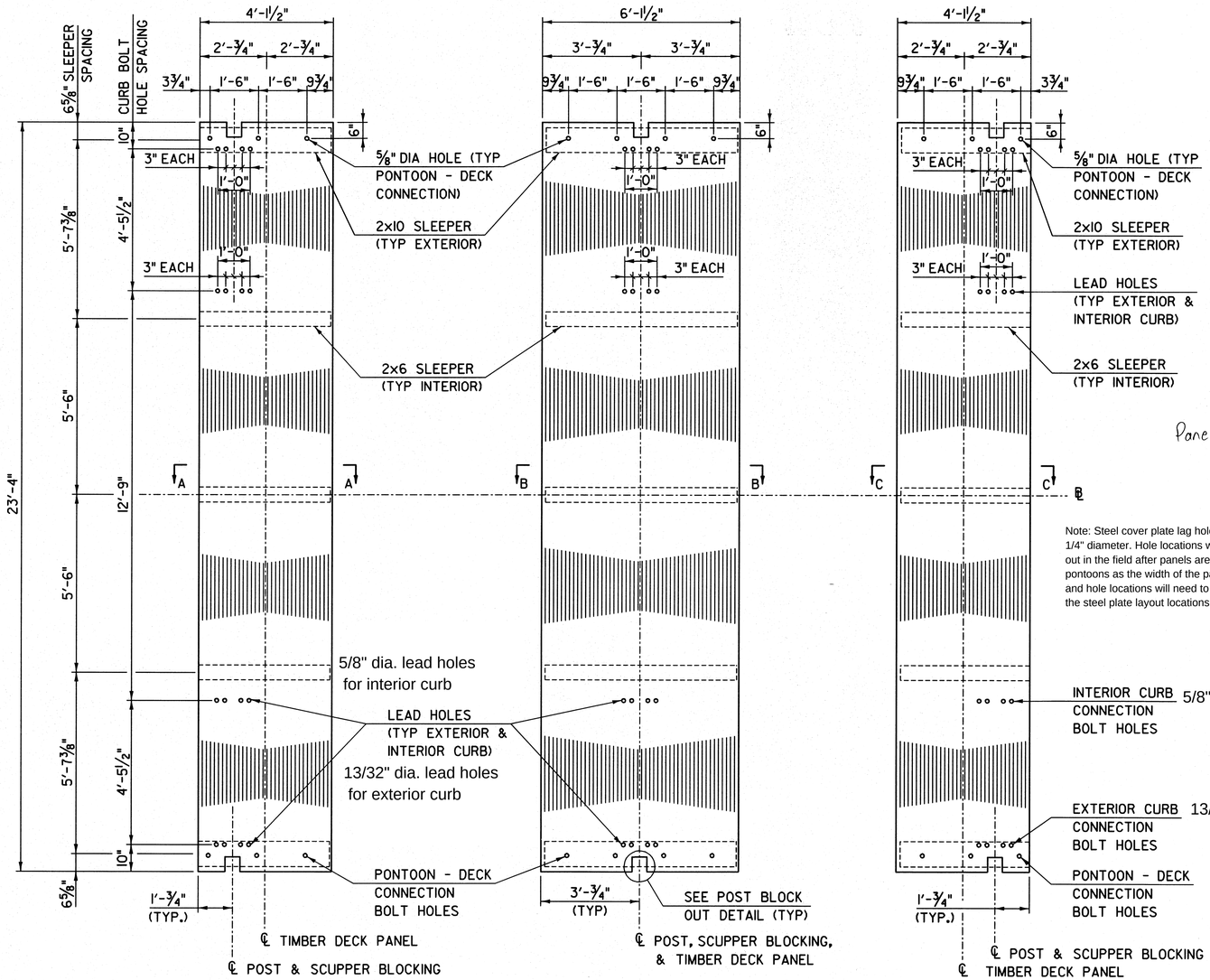

FLOATING SPAN DECK PANEL TYPE A - PLAN

SCALE: ½" = 1'-0"

FLOATING SPAN DECK PANEL TYPE B - PLAN

SCALE: ½" = 1'-0"

FLOATING SPAN DECK PANEL TYPE C - PLAN

SCALE: ½" = 1'-0"

Note: Steel cover plate lag holes to be predrilled 1/4" diameter. Hole locations will need to be laid out in the field after panels are assembled on the pontoons as the width of the panels will vary and hole locations will need to be adjusted to match the steel plate layout locations.

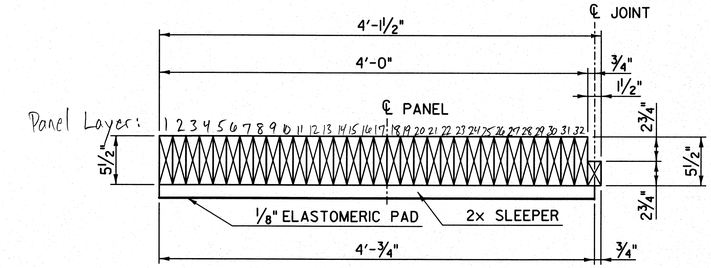

DECK PANEL SECTION A-A - TYPE A

SCALE: 1½" = 1'-0"

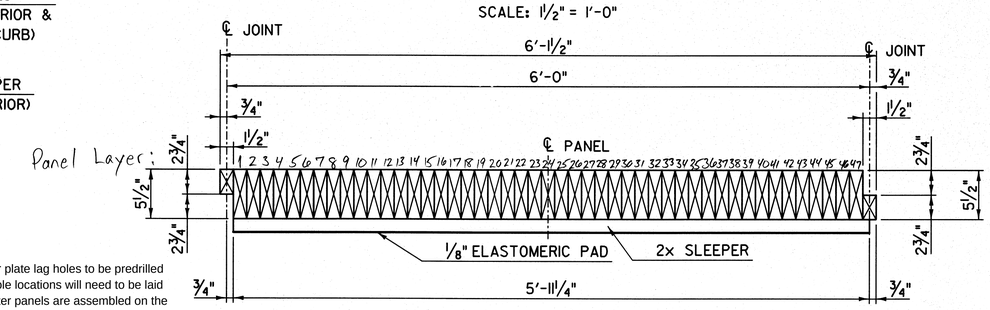

DECK PANEL SECTION B-B - TYPE B

SCALE: 1½" = 1'-0"

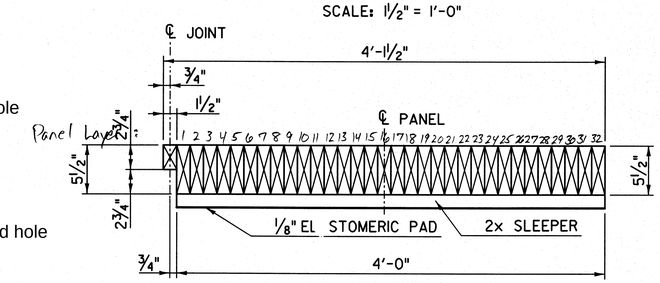

DECK PANEL SECTION C-C - TYPE C

SCALE: 1½" = 1'-0"

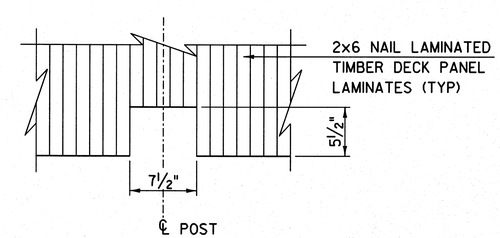

POST BLOCK OUT DETAIL

SCALE: 1½" = 1'-0"

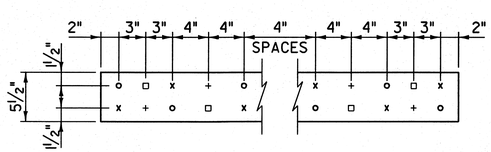

- ○ INDICATES NAILS IN FIRST LAMINATION
- × INDICATES NAILS IN SECOND LAMINATION
- + INDICATES NAILS IN THIRD LAMINATION
- □ INDICATES NAILS IN THE FIRST BOARD ONLY, REVERSED NAILING DIRECTION

FLOATING SPAN DECK PANEL - NAIL PATTERN

SCALE: 1½" = 1'-0"

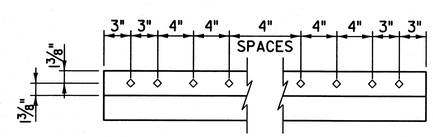

SHIP LAP BOARD - NAIL PATTERN

SCALE: 1½" = 1'-0"

(TOP SHIP LAP BOARD SHOWN, BOTTOM SIMILAR)

PROJECT NAME: BROOKFIELD

PROJECT NUMBER: BRF FLBR(2)

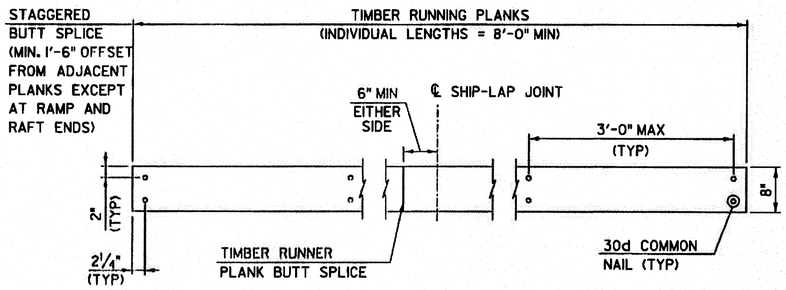

NOTE: TIMBER RUNNER PLANK NAILS SHALL BE CENTERED ON NAIL LAMINATED DECK PANEL LAMINATES.

RUNNER PLANK ATTACHMENT DETAIL - PLAN

SCALE: 1" = 1'-0"

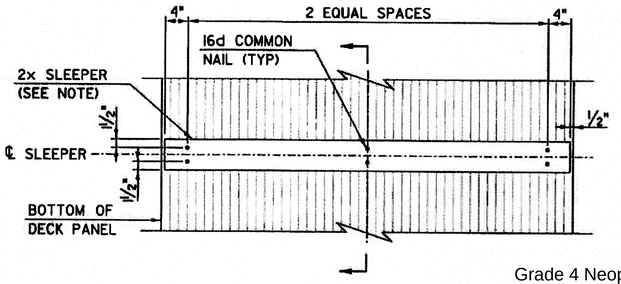

SLEEPER DETAIL - PLAN

SCALE: 1" = 1'-0"

NOTE:

1. ⅛" THICK ELASTOMERIC PADS CONFORMING TO THE LENGTH AND WIDTH OF THE SLEEPER SHALL BE PLACED BENEATH THE SLEEPERS AND ATTACHED TO THE SLEEPERS WITH THE SAME NAILS USED TO ATTACH THE SLEEPER TO THE DECK.

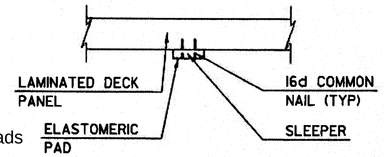

Grade 4 Neoprene Pads

SECTION

SCALE: 1" = 1'-0"

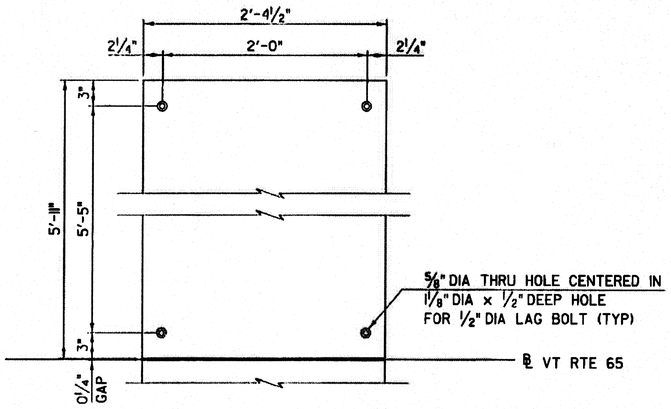

STEEL COVER PLATE PLAN OVER RAFT FIELD SPLICE LOCATIONS

SCALE: 1½" = 1'-0"

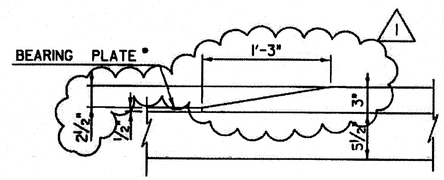

TIMBER RUNNER PLANK BEVEL DETAIL 1

SCALE: 1½" = 1'-0"

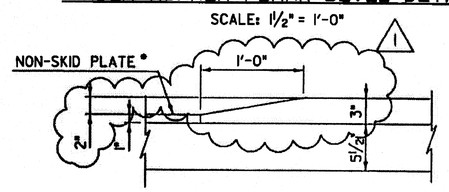

TIMBER RUNNER PLANK BEVEL DETAIL 2

SCALE: 1½" = 1'-0"

* NON-SKID AND BEARING PLATES ARE COMPONENTS OF THE SPECIAL PROVISION (EXPANSION DEVICE, HINGED SLIDING PLATE ASSEMBLY). SEE SHEET 51 FOR LOCATION AND DETAILS.

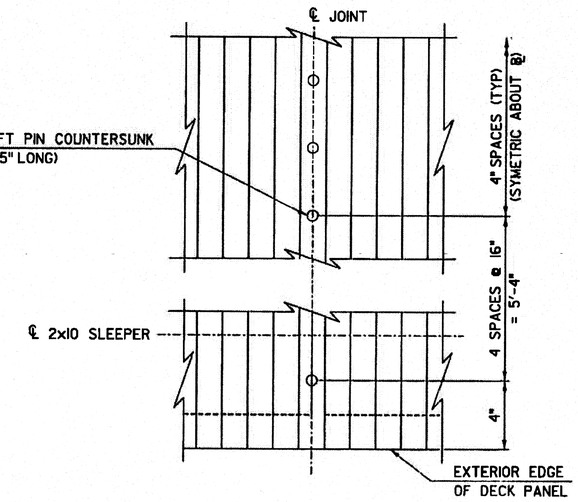

SHIP-LAP DETAIL - PLAN

SCALE: 3" = 1'-0"

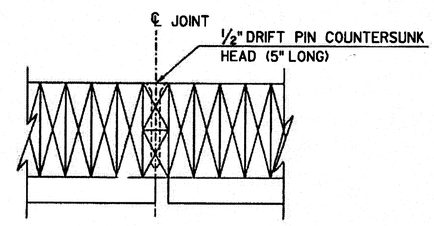

SHIP-LAP DETAIL - SECTION

SCALE: 3" = 1'-0"

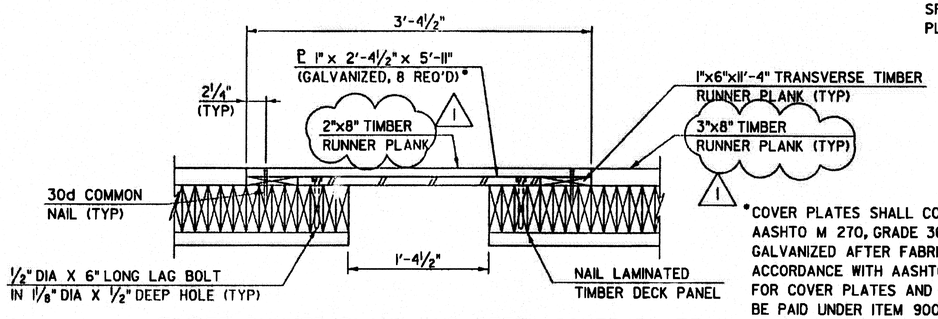

TIMBER RUNNER PLANK AND STEEL COVER PLATE DETAIL OVER RAFT FIELD SPLICES

SCALE: 1½" = 1'-0"

* COVER PLATES SHALL CONFORM TO AASHTO M 270, GRADE 36 AND SHALL BE GALVANIZED AFTER FABRICATION IN ACCORDANCE WITH AASHTO M 111. COSTS FOR COVER PLATES AND HARDWARE SHALL BE PAID UNDER ITEM 900.670, "SPECIAL PROVISION (NAIL LAMINATED TIMBER DECK PANEL)".

REVISION	DESCRIPTION	DATE
REVISION #1	RUNNER PLANK THICKNESS CHANGE	2/4/2014

PROJECT NAME: BROOKFIELD
PROJECT NUMBER: BRF FLBR(2)

1/4" dia. lead holes for 1/2" lag bolts

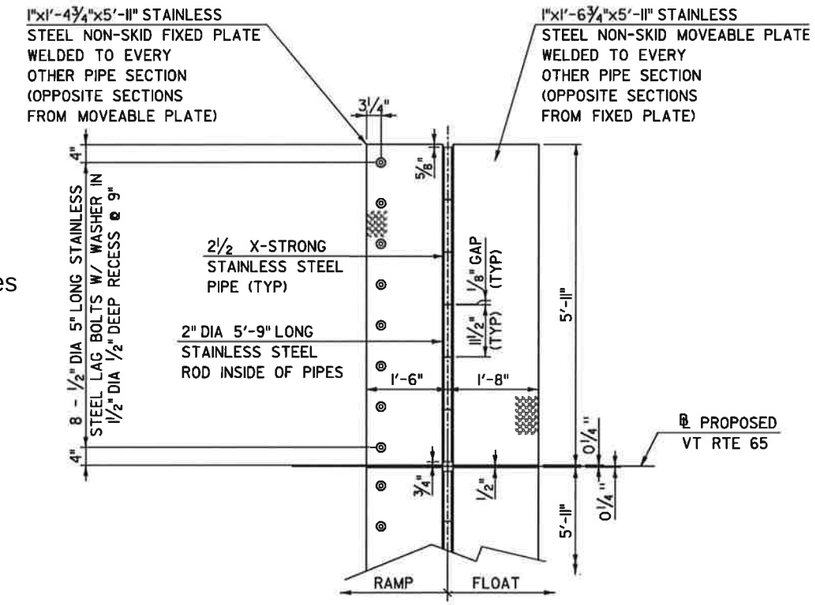

RAMP / FLOAT - ROADWAY ASSEMBLY

SCALE: ¾" = 1'-0"

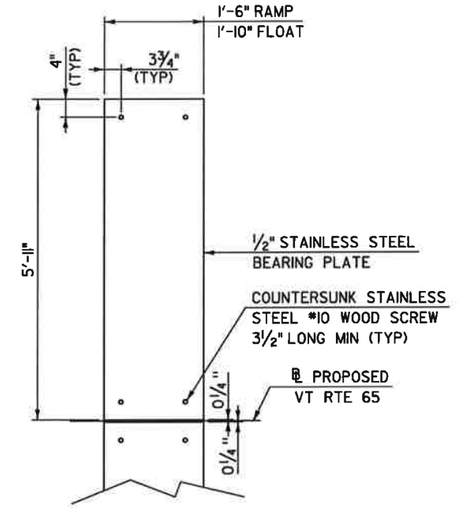

BEARING PLATE

SCALE: ¾" = 1'-0"

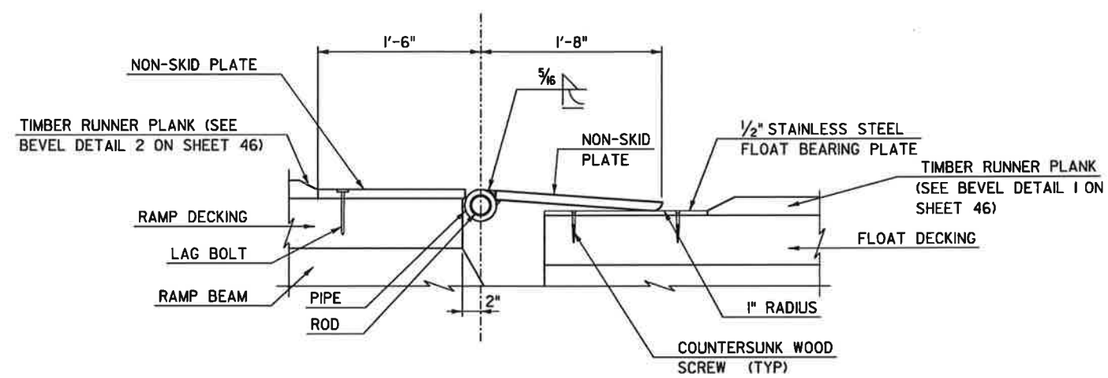

RAMP / FLOAT - ROADWAY SECTION

SCALE: 1½" = 1'-0"

PROJECT NAME: BROOKFIELD
PROJECT NUMBER: BRF FLBR(2)

WRIGHT
CONSTRUCTION COMPANY, INC.
PO Box 189
Mt. Holly, VT 05758
802.259.2094
802.259.2689 fax

Project Name: Brookfield BRF FLBR (2)
Project No.:
Date: 4/18/14
Title: Panel A, B, C decking layout
Drawn By: Joe Poston

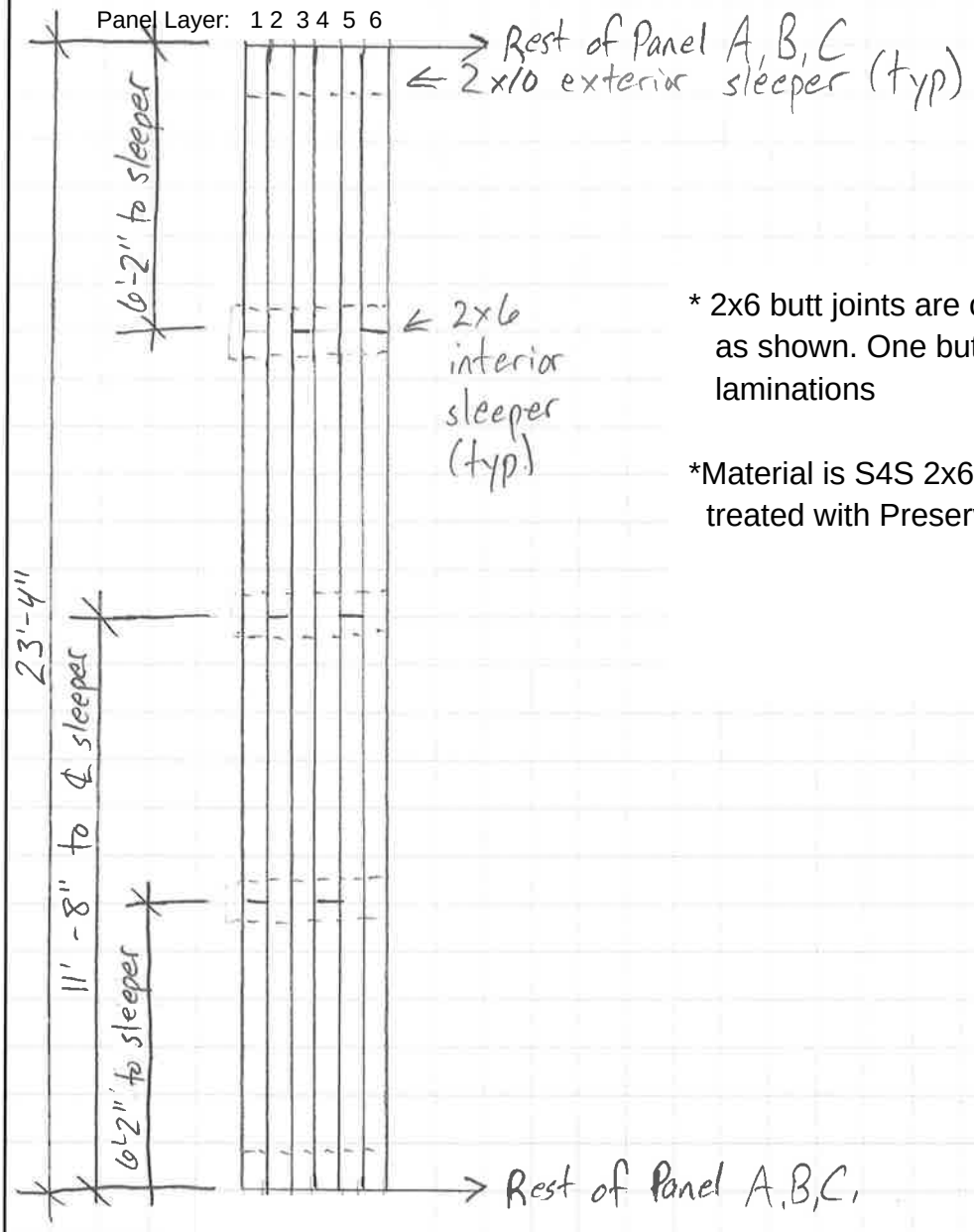

* 2x6 butt joints are on sleeper timber locations as shown. One butt joint per the sequential laminations

*Material is S4S 2x6 Southern Pine No. 1, treated with Preservative Type II

WRIGHT
CONSTRUCTION COMPANY, INC.
PO Box 189
Mt. Holly, VT 05758
802.259.2094
802.259.2689 fax

Project Name: Brookfield BRF FLBR (2)
Project No.:
Date: 4/18/14
Title: Panel D & E Layout
Drawn By: Joe Poston

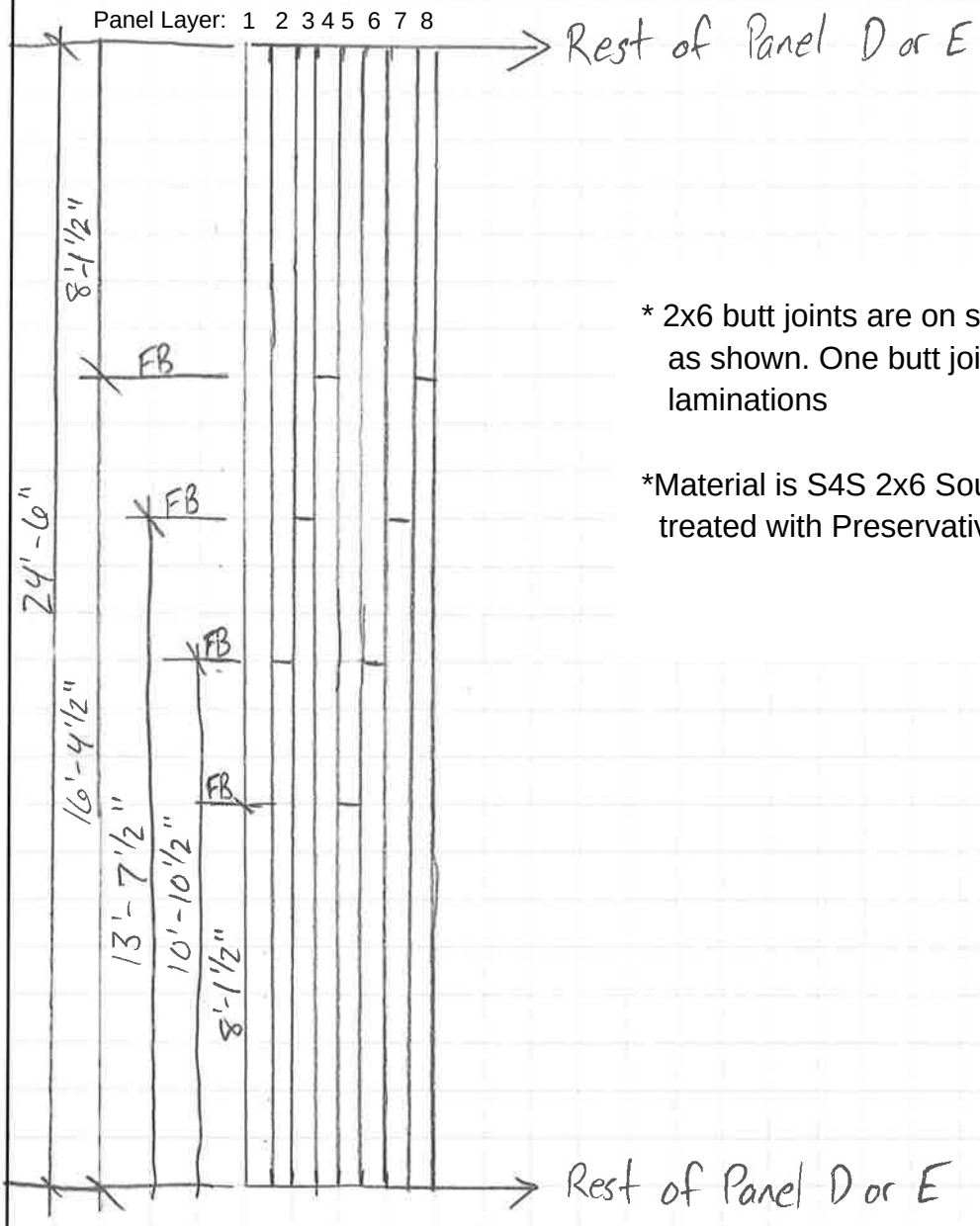

* 2x6 butt joints are on sleeper timber locations as shown. One butt joint per the sequential laminations

*Material is S4S 2x6 Southern Pine No. 1, treated with Preservative Type II

Deck Panel Layer Layout

* indicates layers located at rail post locations

Panel A - 6 panels required										
Layer	5'-8 1/2"	6'-2"	11'-2 1/2"	11'-8"	16'-8 1/2'	17'-2"				
1		1				1				
2				2						
3		1				1				
4		1				1				
5				2						
6		1				1				
7*	1				1					
8*			2							
9*	1				1					
10*	1				1					
11*			2							
12		1				1				
13		1				1				
14				2						
15		1				1				
16		1				1				
17				2						
18		1				1				
19		1				1				
20				2						
21		1				1				
22		1				1				
23				2						
24		1				1				
25		1				1				
26				2						
27		1				1				
28		1				1				
29				2						
30		1				1				
31		1				1				
32				2						
ship lap		1				1				

Panel B - 35 panels required										
Layer	5'-8 1/2"	6'-2"	11'-2 1/2"	11'-8"	16'-8 1/2'	17'-2"				
ship lap		1				1				
1		1				1				
2				2						
3		1				1				
4		1				1				
5				2						
6		1				1				
7		1				1				
8				2						
9		1				1				
10		1				1				
11				2						
12		1				1				
13		1				1				
14				2						
15		1				1				
16		1				1				
17				2						
18		1				1				
19		1				1				
20				2						
21		1				1				
22*	1				1					
23*			2							
24*	1				1					
25*	1				1					
26*			2							
27		1				1				
28		1				1				
29				2						
30		1				1				
31		1				1				
32				2						
33		1				1				
34		1				1				
35				2						
36		1				1				
37		1				1				
38				2						
39		1				1				
40		1				1				
41				2						
42		1				1				
43		1				1				
44				2						
45		1				1				
46		1				1				
47				2						
ship lap				2						

Panel C - 4 panels required										
Layer	5'-8 1/2"	6'-2"	11'-2 1/2"	11'-8"	16'-8 1/2'	17'-2"				
ship lap		1				1				
1		1				1				
2				2						
3		1				1				
4		1				1				
5				2						
6		1				1				
7		1				1				
8				2						
9		1				1				
10		1				1				
11				2						
12		1				1				
13		1				1				
14				2						
15		1				1				
16		1				1				
17				2						
18		1				1				
19		1				1				
20				2						
21		1				1				
22*	1				1					
23*			2							
24*	1				1					
25*	1				1					
26*			2							
27		1				1				
28		1				1				
29				2						
30		1				1				
31		1				1				
32				2						

Panel D - 8 panels required										
Layer		x	7'-8"	8'-1 1/2"	10'-5"	10'-10 1/2"	13'-2"	13'-7 1/2"	15'-11"	16'-4 1/2"
1				1						1
2						1		1		
3						1		1		
4				1						1
5				1						1
6						1		1		
7						1		1		
8				1						1
9				1						1
10						1		1		
11						1		1		
12				1						1
13				1						1
14						1		1		
15						1		1		
16				1						1
17				1						1
18						1		1		
19						1		1		
20				1						1
21				1						1
22*					1		1			
23*					1		1			
24*			1						1	
25*			1						1	
26*					1		1			
27						1		1		
28				1						1
29				1						1
30						1		1		
31						1		1		
32				1						1
33				1						1
34						1		1		
35						1		1		
36				1						1
37				1						1
38						1		1		
39						1		1		
40				1						1
41				1						1
42						1		1		
43						1		1		
44				1						1
45				1						1
46						1		1		
47						1		1		
48				1						1

Panel E - 4 panels required										
Layer		x	7'-8"	8'-1 1/2"	10'-5"	10'-10 1/2"	13'-2"	13'-7 1/2"	15'-11"	16'-4 1/2"
1				1						1
2						1		1		
3						1		1		
4				1						1
5*			1						1	
6*					1		1			
7*					1		1			
8*			1						1	
9*			1						1	
10						1		1		
11						1		1		
12				1						1
13				1						1
14						1		1		
15						1		1		
16				1						1
17				1						1
18						1		1		
19						1		1		
20				1						1
21				1						1
22						1		1		
23						1		1		
24				1						1

802-259-2689

PHONE (518) 458-1141
FAX (518) 458-7650

THE WOODWARD CO.

9 BURDICK DRIVE
ALBANY, N.Y. 12205

DATE: 7-11-14

TO: Wright Const. - Joe Poston

FROM: Mark W.

NUMBER OF PAGES INCLUDING THIS ONE: 1

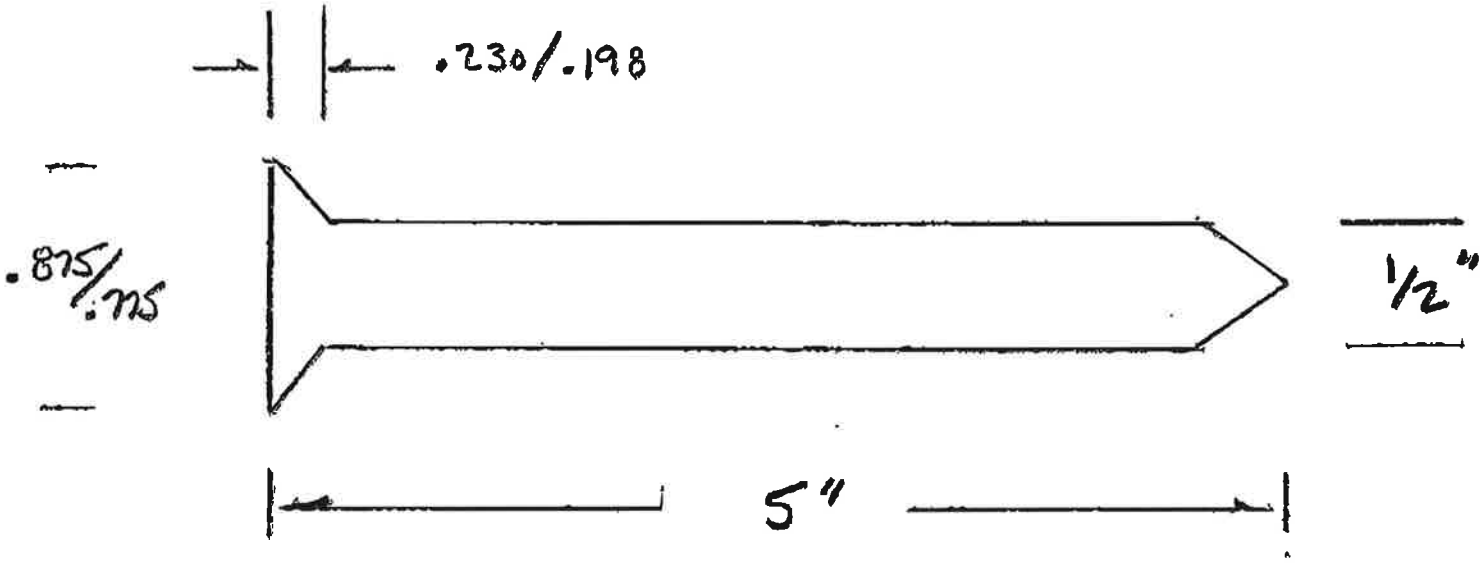

1/2 x 5 A-307 Drift Pin
Hot Dip Galv to ASTM A 153

DRIFT PIN

HAND-DRIVEN NAILS FOR DECKING & TRIM

DOUBLE HOT-DIP GALVANIZED P.T.L.® NAILS FOR THE NEW TREATED LUMBER

These nails are made from stiffer stock steel so the shanks can be smaller in diameter to help reduce wood splitting without bending. Ring and spiral shanks provide exceptional holding power. Producers of treated lumber and many building codes specify hot-dip galvanized or stainless steel nails because they have a life expectancy comparable to that of the treated lumber. Maze ***STORMGUARD®*** P.T.L.® Nails are Double Hot-Dip Galvanized. See page 7 for Collated P.T.L.® Nails.

Shipped in Standard 50-lb or 25-lb Bulk Cartons Unless Otherwise Specified. (6) 5-lb boxes per master. (12) 1-lb boxes per master.

PLAIN SHANK

Stock Numbers Plain Shank	Length	Gauge	Head	Nails /lb	Price 50 lb	25 lb	5 lb	1 lb
T-445	2"	11	9/32"	137	$129.95	—	$15.15	$3.53
T-447	2½"	11	9/32"	111	$129.66	—	$15.13	$3.53
T-449	3"	10	9/32"	75	$131.53	$70.96	$15.33	$3.55
T-4490	3¼"	10	9/32"	69	$139.00	—	—	$3.71
T-4491	3½"	9	5/16"	54	$137.28	$73.84	$15.90	$3.67
T-4492	4"	7	3/8"	33	$131.83	—	$15.35	$3.55
T-4493	4½"	7	3/8"	29	$132.68	—	—	—
T-4494	5"	5½	15/32"	20	$131.83	—	—	—
T-4496	6"	5½	15/32"	18	$130.95	—	—	—

LIFETIME WARRANTY!

RING SHANK

Stock Numbers Ring Shank	Length	Gauge	Head	Nails /lb	Price 50 lb	25 lb	5 lb	1 lb
T-445-A	2"	11	9/32"	137	$152.24	$81.31	$17.39	$4.01
T-447-A	2½"	11	9/32"	111	$152.24	$81.31	$17.39	$4.01
T-449-A	3"	10	9/32"	75	$147.50	$78.93	$16.90	$3.88
T-4490-A	3¼"	10	9/32"	69	$147.64	$79.01	$16.94	$3.88
T-4491-A	3½"	9	5/16"	54	$147.50	$79.01	$16.90	$3.88
T-4492-A	4"	7	3/8"	33	$144.19	$77.29	$16.60	$3.82
T-4493-A	4½"	7	3/8"	29	$147.93	—	$16.96	—
T-4494-A	5"	5½	15/32"	20	$144.19	—	$16.60	—
T-4496-A	6"	5½	15/32"	18	$144.19	—	$16.60	—

Nails for decking

LIFETIME WARRANTY!

SPIRAL SHANK

Stock Numbers Spiral Shank	Length	Gauge	Head	Nails /lb	Price 50 lb	25 lb	5 lb	1 lb
T-445-S	2"	11	9/32"	137	$158.56	—	$18.03	$4.13
T-447-S	2½"	11	9/32"	111	$154.69	$82.53	$17.63	$4.03
T-449-S	3"	10	9/32"	75	$149.80	$80.08	$17.14	$3.93
T-4490-S	3¼"	10	9/32"	69	$150.09	—	$16.94	$3.93
T-4491-S	3½"	9	5/16"	54	$147.50	$79.65	$17.05	$3.91
T-4492-S	4"	7	3/8"	33	$148.35	—	$16.99	$3.91
T-4493-S	4½"	7	3/8"	29	$147.35	—	$16.90	—
T-4494-S	5"	5½	15/32"	20	$147.35	—	$16.90	—
T-4496-S	6"	5½	15/32"	18	$143.60	—	$16.54	—

STAINLESS STEEL (304) NAILS FOR THE NEW TREATED LUMBER

Type 304 STAINLESS STEEL P.T.L.® NAILS are for applications requiring even higher corrosion-resistance than offered by Double Hot-Dip Galvanized nails.

RING SHANK

Stock Numbers Ring Shank	Length	Gauge	Head	Nails/lb	Price 25 lb	5 lb
XSST443A	1½"	11½"	9/32"	206	$288.10	—
XSST445A	2"	11½	9/32"	158	$251.24	—
XSST447A	2½"	11	9/32"	119	$201.86	$51.18
XSST449A	3"	10	9/32"	83	$196.60	$50.86
XSST4491A	3½"	9	5/16"	58	$198.39	$50.40
XSST4492A	4"	7	3/8"	35	$193.98	$50.28
XSST4493A	4½"	7	3/8"	30	$195.39	$50.60
XSST4494A	5"	5½	15/32"	23	$198.08	$50.34
XSST4496A	6"	5½	15/32"	19	$196.60	$50.86

**** (6) 5-Lb boxes per master.***

STAINLESS STEEL (316) NAILS FOR THE NEW TREATED LUMBER

Made from Type 316 STAINLESS STEEL for ultimate corrosion-resistance. Recommended for the application of skirt boards treated with corrosive preservatives.

RING SHANK

Stock Numbers Ring Shank	Length	Gauge	Head	Nails/lb	Price 25 lb
XSST445A316	2"	11½	9/32"	158	$284.30
XSST447A316	2½"	11	9/32"	119	$272.29
XSST449A316	3"	10	9/32"	83	$266.22
XSST4491A316	3½"	9	5/16"	58	$263.22
XSST4492A316	4"	7	3/8"	35	$259.61
XSST4493A316	4½"	7	3/8"	30	$257.89
XSST4494A316	5"	5½	15/32"	23	$254.13
XSST4496A316	6"	5½	15/32"	19	$251.24

STAINLESS STEEL DECKING NAILS

These Screw-Down® nails hold tight on a wide variety of outdoor applications. Ideal for use on cedar & redwood decks where a durable nail is needed to drive into the pressure treated lumber joists. Textured head holds paint and stain. Manufactured from top-grade, Type 304 Stainless Steel. See page 7 for Collated Stainless Steel Nails.

Stock Numbers Spiral Shank	Length	Gauge	Head	Nails/lb	Price 25 lb
SSDK-6	2"	11½	19/64"	172	$199.80
SSDK-8	2½"	11½	19/64"	138	$198.00
SSDK-10	3"	11½	19/64"	118	$196.00
SSDK-16	3½"	11	7/32"	84	$196.00

The 2012 International Residential Code – Section R317.3.1 and the International Building Code – Section 2304.9.5.1 both state: "Fasteners in contact with preservative-treated wood shall be of hot-dipped zinc-coated galvanized steel, stainless steel, silicon bronze or copper." Our Maze *Stormguard®* Double Hot-Dipped, Zinc-Coated Galvanized Nails and Type 304 and Type 316 Stainless Steel Nails meet those criteria.

TABLE 45 Type I, Style 30—Post-Frame Shank Nails[A]

NOTE—Steel, flat head, diamond point, round, mechanically deformed shank, bright or zinc-coated as specified. Nails shall comply with the supplementary requirements of S1 and Table S1.2.

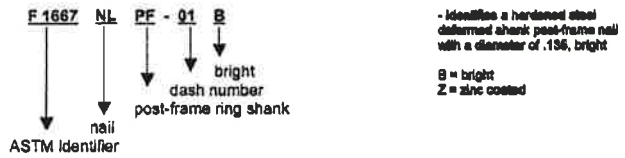

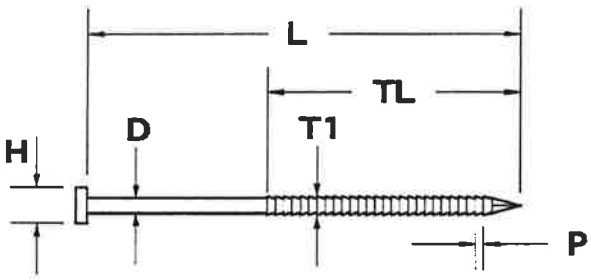

Dash No.	*L*	*D*	*H*	T1–D max	T1–D min	TL min	P_{max}	P_{min}	Root Diameter[B]
01	3	0.135	5/16	.010	.005	2.25	.077	.050	0.128
02	3	0.148	5/16	.010	.005	2.25	.077	.050	0.140
03	3	0.177	3/8	.010	.005	2.25	.077	.050	0.169
04	3.5	0.135	5/16	.010	.005	2.25	.077	.050	0.128
05	3.5	0.148	5/16	.010	.005	2.25	.077	.050	0.140
06	3.5	0.177	3/8	.010	.005	2.25	.077	.050	0.169
07	3.5	0.200	15/32	.010	.005	2.25	.077	.050	0.193
08	4	0.148	5/16	.010	.005	2.25	.077	.050	0.140
09	4	0.177	3/8	.010	.005	2.25	.077	.050	0.169
10	4	0.200	15/32	.010	.005	2.25	.077	.050	0.193
11	4	0.207	15/32	.010	.005	2.25	.077	.050	0.199
12	4.5	0.148	5/16	.010	.005	3	.077	.050	0.140
13	4.5	0.177	3/8	.010	.005	3	.077	.050	0.169
14	4.5	0.200	15/32	.010	.005	3	.077	.050	0.193
15	4.5	0.207	15/32	.010	.005	3	.077	.050	0.199
16	5	0.177	3/8	.010	.005	3	.077	.050	0.169
17	5	0.200	15/32	.010	.005	3	.077	.050	0.193
18	5	0.207	15/32	.010	.005	3	.077	.050	0.199
19	6	0.177	3/8	.010	.005	3	.077	.050	0.169
20	6	0.200	15/32	.010	.005	3	.077	.050	0.193
21	6	0.207	15/32	.010	.005	3	.077	.050	0.199
22	8	0.177	3/8	.010	.005	3	.077	.050	0.169
23	8	0.200	15/32	.010	.005	3	.077	.050	0.193
24	8	0.207	15/32	.010	.005	3	.077	.050	0.199

our Maze
T4492A =
4" x .177 x 3/8"

L = length, in.,
H = head diameter, in.,
TL = length of threaded shank, in.,
max = maximum acceptable value (not subject to tolerances),
min = minimum acceptable value (not subject to tolerances),
D = shank diameter, in.,
T1 = crest diameter, in., and
P = pitch, or spacing of threads, in.

[A] All dimensions are given in inches.
[B] Root diameter is a calculated value and is not specified as a dimension to be measured.

Copyright by ASTM Int'l (all rights reserved); Thu Apr 28 08:44:21 EDT 2011
Downloaded/printed by
Thomas Koch (Maze+Nails) pursuant to License Agreement. No further reproductions authorized.