MILLER CONSTRUCTION, INC.

P.O. BOX 86 ASCUTNEY BLVD WINDSOR, VERMONT 05089-0086
TELEPHONE (802) 674-5525 / FAX (802) 674-5245

TRANSMITTAL

TO: Jennifer Fitch, PE Project Manager Vermont Agency of Transportation	DATE	PROJECT NO.
	6/6/2014	Brookfield BRF FLBR (2)

XX WE ENCLOSE THE FOLLOWING: _____ UNDER SEPARATE COVER WE ARE SENDING THE FOLLOWING

COPIES	NUMBER	DESCRIPTION	CODE
1		Expansion Device, Hinged Sliding Plate Assembly Shop Drawings	H

CODE:

A FOR INITIAL APPROVAL
B FOR FINAL APPROVAL
C APPROVED AS NOTED-RESUBMISSION REQUIRED
D APPROVED AS NOTED-RESUBMISSION NOT REQUIRED
E DISAPPROVED-RESUBMIT
F QUOTATION REQUESTED
G APPROVED
H FOR APPROVAL
I AS REQUESTED OR REQUIRED
J FOR USE IN ERECTION
K LETTER FOLLOWS
L FOR FIELD CHECK
M FOR YOUR USE

BY: Paul

GENERAL NOTES

1.0 GENERAL

1.1 THE CONTRACTOR MUST VERIFY ALL DIMENSIONS PRIOR TO FABRICATION TO ENSURE ACCURACY OF THE EXPANSION JOINT.

DIMENSIONS VERIFIED:_____.

1.2 ALL WORK SHALL COMPLY WITH THE VERMONT AGENCY OF TRANSPORTATION'S STANDARD SPECIFICATIONS FOR CONSTRUCTION DATED 2011, AND ITS LATEST REVISIONSAND THE AASHTO STANDARD SPECIFICATIONS FOR HIGHWAY BRIDGES, SIXTEENTH EDITION AND ITS LATEST REVISIONS, EXCEPT AS NOTED HEREIN.

1.3 ALL DIMENSIONS ARE IN INCHES UNLESS OTHERWISE NOTED.

1.4 IN CASE OF DIFFERENCE ON THE CONTRACT PLANS BETWEEN SCALE DIMENSIONS AND FIGURES, THE FIGURES SHALL BE FOLLOWED.

2.0 STANDARD SPECIFICATION CRITERIA

3.0 SPECIAL PROVISION CRITERIA

4.0 MATERIALS

4.1 ALL STRUCTURAL AND PERMANENT MATERIALS SHALL BE OF DOMESTIC ORIGIN, AND MATERIAL CERTIFICATION STATING ALL SUCH MATERIALS ARE "MELTED AND MANUFACTURED" IN THE UNITED STATES OF AMERICA SHALL BE SUBMITTED.

4.2 STEEL BARS, PLATES AND SHAPES SHALL BE STAINLESS STEEL.

4.3 THE CONCRETE ANCHOR STUDS SHALL BE IN ACCORDANCE WITH ASTM A-108.

5.0 INSPECTION REQUIREMENTS

5.1 IN HOUSE SHOP INSPECTION BY A REPRESENTATIVE OF VERMONT AGENCY OF TRANSPORTATION INDEPENDENT OF WATSON BOWMAN ACME CORP.'S QUALITY CONTROL INSPECTOR IS REQUIRED.

5.2 QUALITY CONTROL INSPECTION

5.2.1 DURING FABRICATION OF THE EXPANSION JOINT, WATSON BOWMAN ACME SHALL PROVIDE FULL TIME QUALITY CONTROL INSPECTION TO INSURE THAT THE MATERIALS AND WORKMANSHIP MEET OR EXCEED THE MINIMUM REQUIREMENTS OF THE CONTRACT.

6.0 FABRICATION

6.1 FABRICATION SHALL BE IN ACCORDANCE WITH WATSON BOWMAN ACME'S QUALITY CONTROL MANUAL AND MANUFACTURING TOLERANCE.

6.2 ALL WELDING SHALL BE IN ACCORDANCE WITH AWS D1.6 WELDING SPECIFICATIONS.

6.3 ALL WELDING SHALL BE EXECUTED USING GMAW PROCESSES.

6.4 STUDS SHALL BE INSPECTED VISUALLY AND SHALL BE GIVEN A LIGHT BLOW WITH A HAMMER. ANY STUD WHICH DOES NOT HAVE A COMPLETE END WELD OR DOES NOT EMIT A RINGING SOUND WHEN STRUCK WITH A LIGHT BLOW WITH A HAMMER SHALL BE REPLACED.

6.5 STUDS SHALL NOT BE LOCATED MORE THAN 1" FROM THE LOCATION SHOWN ON THESE SHOP DRAWINGS.

6.6 STUDS MAY BE BENT TO AN ANGLE OF 30° TO AVOID INTERFERENCE WITH DECK REINFORCEMENT, OR TO PROVIDE PROPER CONCRETE COVER.

6.7 AFTER FABRICATION, BUT BEFORE SHIPPING, STRAIGHTEN STEEL SHAPES SO THAT THEY ARE FREE FROM WARP, TWIST AND SWEEP.

6.8 FOR PAYMENT PURPOSES THE LENGTH OF THE JOINT PAID FOR WILL BE THE NUMBER OF LINEAR FEET OF JOINT SYSTEM INSTALLED, MEASURED HORIZONTALLY AND VERTICALLY ALONG THE CENTERLINE OF THE JOINT SYSTEM BETWEEN THE OUTER LIMITS OF THE BRIDGE FASCIA UNLESS OTHERWISE SHOWN ON THE PLANS.

7.0 COATINGS

7.1 THE RIDING SURFACES OF THE STAINLESS STEEL SHALL BE COATED WITH A SLIP RESISTANT MATERIAL. HIGH PURITY NICKEL CHROME WIRE (Ni20cR) SHALL BE SPRAY APPLIED. THE ALLOY SHALL HAVE A ROCKWELL HARDNESS SCALE OF HRB 90. SUPPLIER SHALL BE HUBBELL GALVANIZING INC. PRODUCT SHALL BE "GALVAGRIT" FINE.

INSPECTION REQUIRED

STATE: VERMONT
COUNTY: ORANGE
PROJECT NO.: BRF FLBR(2)
REFERENCE NO.: XXXXXXXXX
DISTRICT: XXX ROUTE: 65
WBA PRODUCT NO.: EMB154768AA-AF

SHEET NUMBER.
ITEM DESIGNATION.
ITEM NUMBER.
2e1

MARK SYSTEM

DRAWING ACTION:

SUBMITTED FOR APPROVAL

DATE: 6/5/14

NO.	DESCRIPTION	NAME	DATE
3			
2			
1			

Information provided herein, including but not limited to, any drawing, design, photograph, graphic, or statement(s) ("Materials") are proprietary and the property of Watson Bowman Acme Corporation ("Company"). Reproduction, translation, or reduction to any electronic medium or machine readable form, in whole or part, is strictly prohibited, except for the express purpose for which it has been furnished, without prior written consent of Company. All Materials contained herein are provided by Company for information purposes only. Company reserves the right to amend or withdraw any information contained in the Materials without notice. All technical or other advice by Company, whether verbal or written, concerning products, or the use of products in specific situations ("Advice") is given by Company and is used at the Users own risk.

Watson Bowman Acme Corp.
95 Pineview Drive
Amherst, NY 14228
phone: (716)691-7566
fax: (716)691-6239
www.wbacorp.com

BASF The Chemical Company

PROJECT:
VERMONT RTE 65
REPLACEMENT OF FLOATING BRIDGE

WABO EMB HINGED SLIDING PLATE JOINT DETAILS

DETAILED BY: TEB	DATE: 6/4/14
CHECKED BY: TPL	DATE: 6/6/14
SCALE: NONE	WBA JOB NO.: 154768
SHEET NO.: 1 OF 6	DRAWING NO.: D-31790

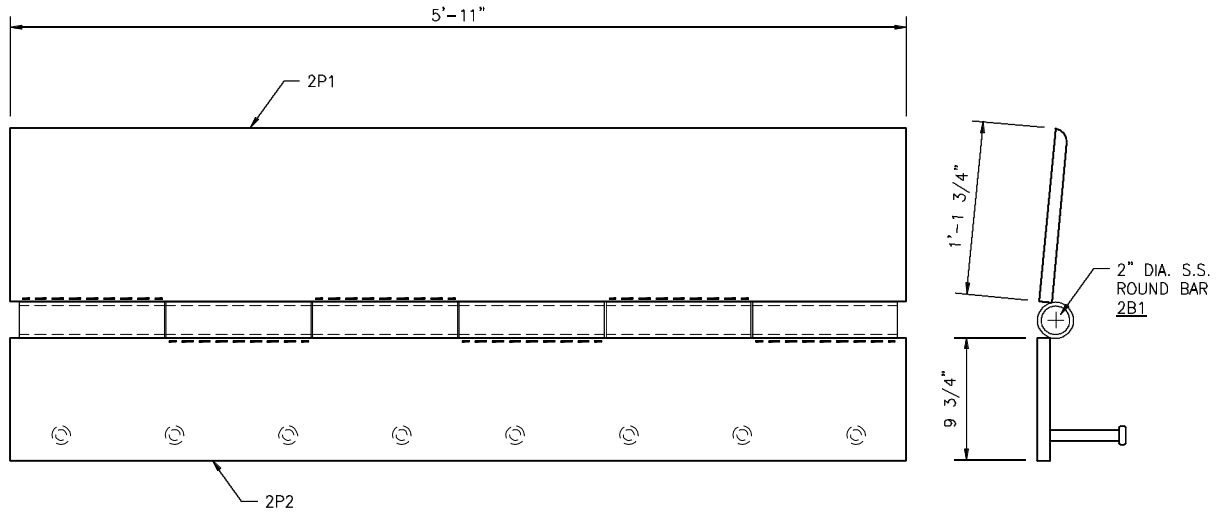

(4) – EMB154768AA

ABUTMENT / RAMP – ROADWAY ASSEMBLY

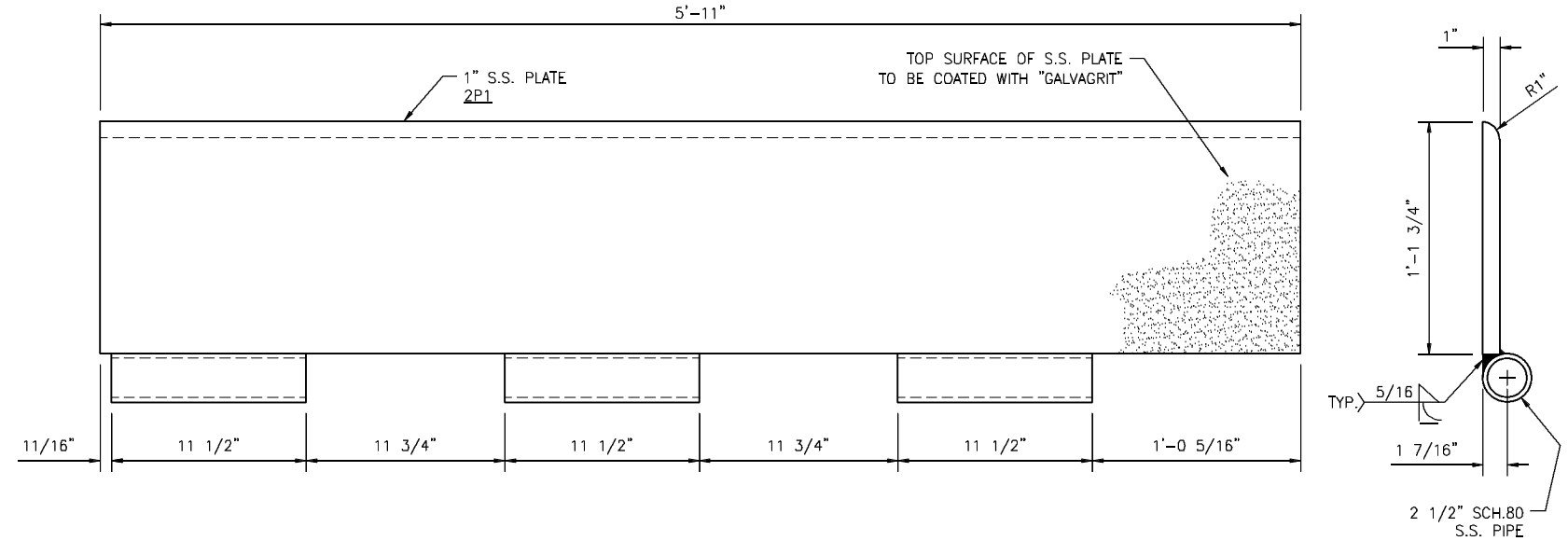

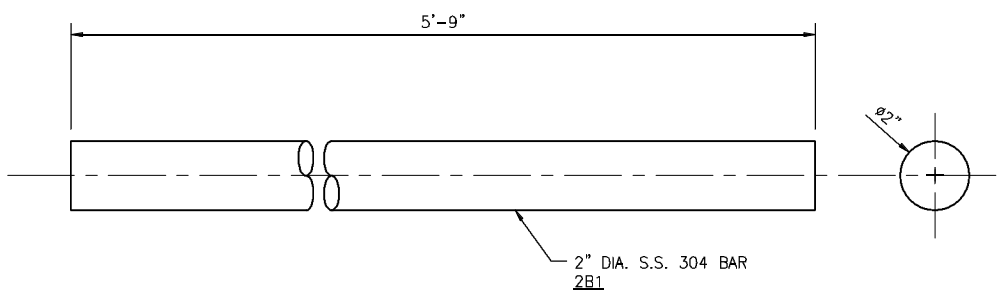

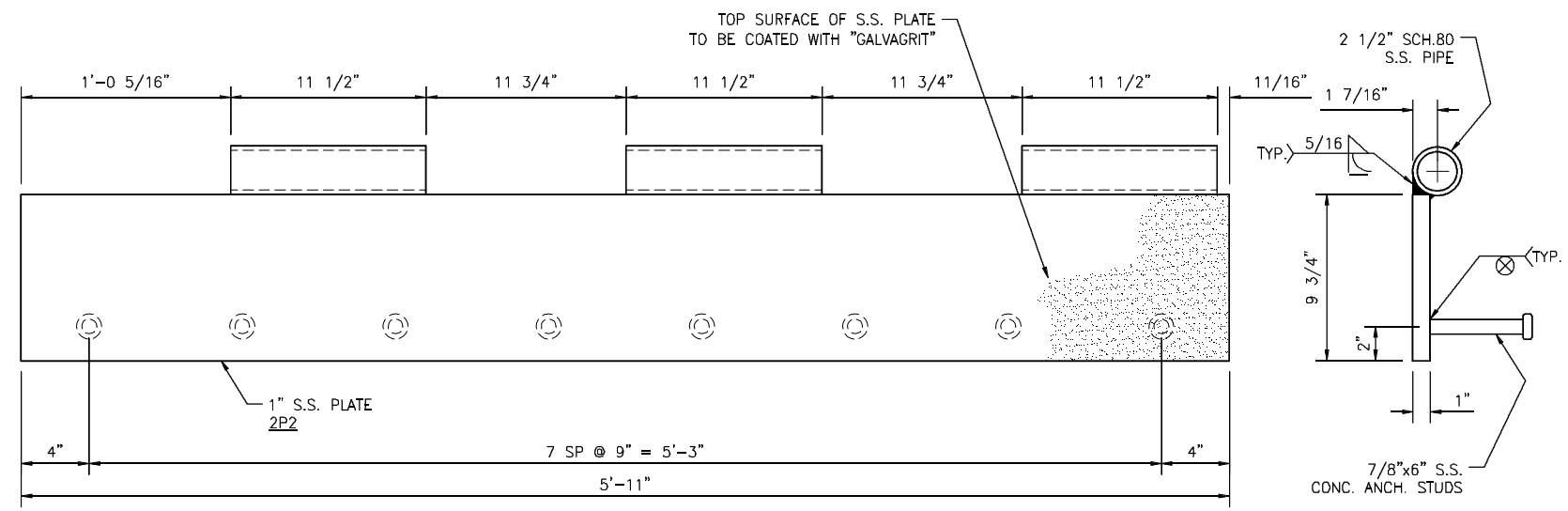

INSPECTION REQUIRED

EMB154768AA QTY: 4 REQD. **STRUCTURED BILL OF MATERIALS**

LV	PART NO.	QTY	UM	DESCRIPTION	MATERIAL	REVISION
0	EMB154768AA	1.00	EA	EMB; ABUT/RAMP - ROADWAY ASSY.; 5.92'	UNCOATED	
					SHIPPING LENGTH = 6'±	
				GALVAGRIT (FINE) COATING ON TOP SURFACES OF 1" PLATES	APPROX. SHIPPING WEIGHT = 650 lb	
1	NTS154768A	520.00	LB	STNLS STL 1" TYPE 304 NO FIN	2P1, 2P2	
1	NTS154768B	6.00	FT	2 1/2" SCH.80 S.S. PIPE (A)		
1	NTS154768C	8.00	EA	7/8"x6" CONC. ANCH. STUDS S.S. ASTM F593 (A)		
1	NTS154768D	5.75	FT	ROUND BAR 2" S.S. 304 (A)	2B1	
			#N/A	#N/A		

SHEET NUMBER.
ITEM DESIGNATION.
ITEM NUMBER.
2e1

MARK SYSTEM

STATE: VERMONT
COUNTY: ORANGE
PROJECT NO.: BRF FLBR(2)
REFERENCE NO.: XXXXXXXXX
DISTRICT: XXX ROUTE: 65
WBA PRODUCT NO.: EMB154768AA–AF

DRAWING ACTION:

SUBMITTED FOR APPROVAL

DATE: 6/5/14

NO.	DESCRIPTION	NAME	DATE
3			
2			
1			

Information provided herein, including but not limited to, any drawing, design, photograph, graphic, or statement(s) ("Materials") are proprietary and the property of Watson Bowman Acme Corporation ("Company"). Reproduction, translation, or reduction to any electronic medium or machine readable form, in whole or part, is strictly prohibited, except for the express purpose for which it has been furnished, without prior written consent of Company. All Materials contained herein are provided by Company for information purposes only. Company reserves the right to amend or withdraw any information contained in the Materials without notice. All technical or other advice by Company, whether verbal or written, concerning products, or the use of products in specific situations ("Advice") is given by Company and is used at the Users own risk.

Watson Bowman Acme
Watson Bowman Acme Corp.
95 Pineview Drive
Amherst, NY 14228
phone: (716)691-7566
fax: (716)691-0239
www.wbacorp.com

BASF The Chemical Company

PROJECT:
VERMONT RTE 65
REPLACEMENT OF FLOATING BRIDGE

WABO EMB HINGED SLIDING PLATE JOINT DETAILS

DETAILED BY: TEB	DATE: 6/4/14
CHECKED BY: TPL	DATE: 6/6/14
SCALE: NONE	WBA JOB NO.: 154768
SHEET NO.: 2 OF 6	DRAWING NO.: D–31790

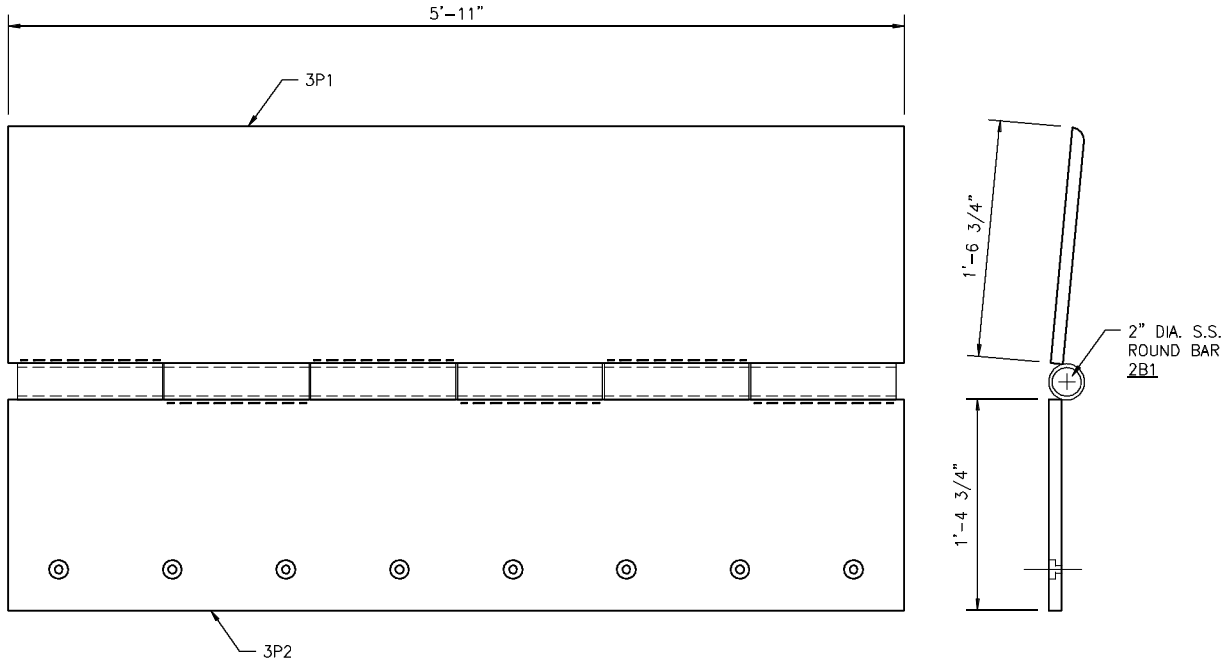

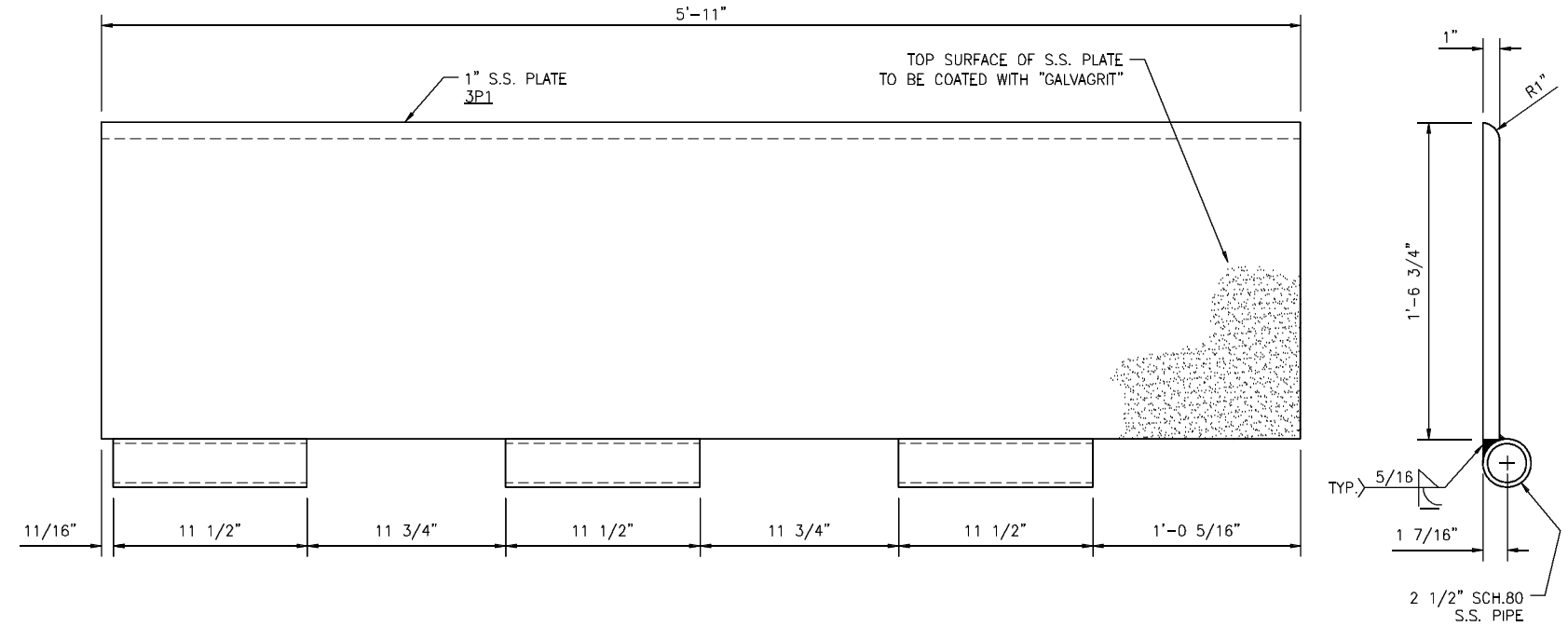

(4) – EMB154768AB

RAMP / FLOAT – ROADWAY ASSEMBLY

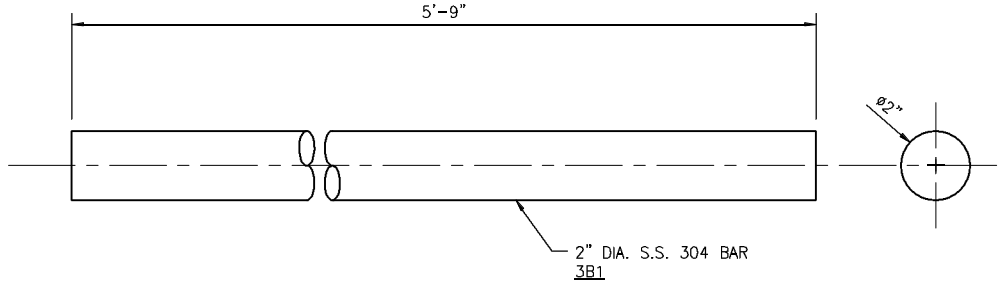

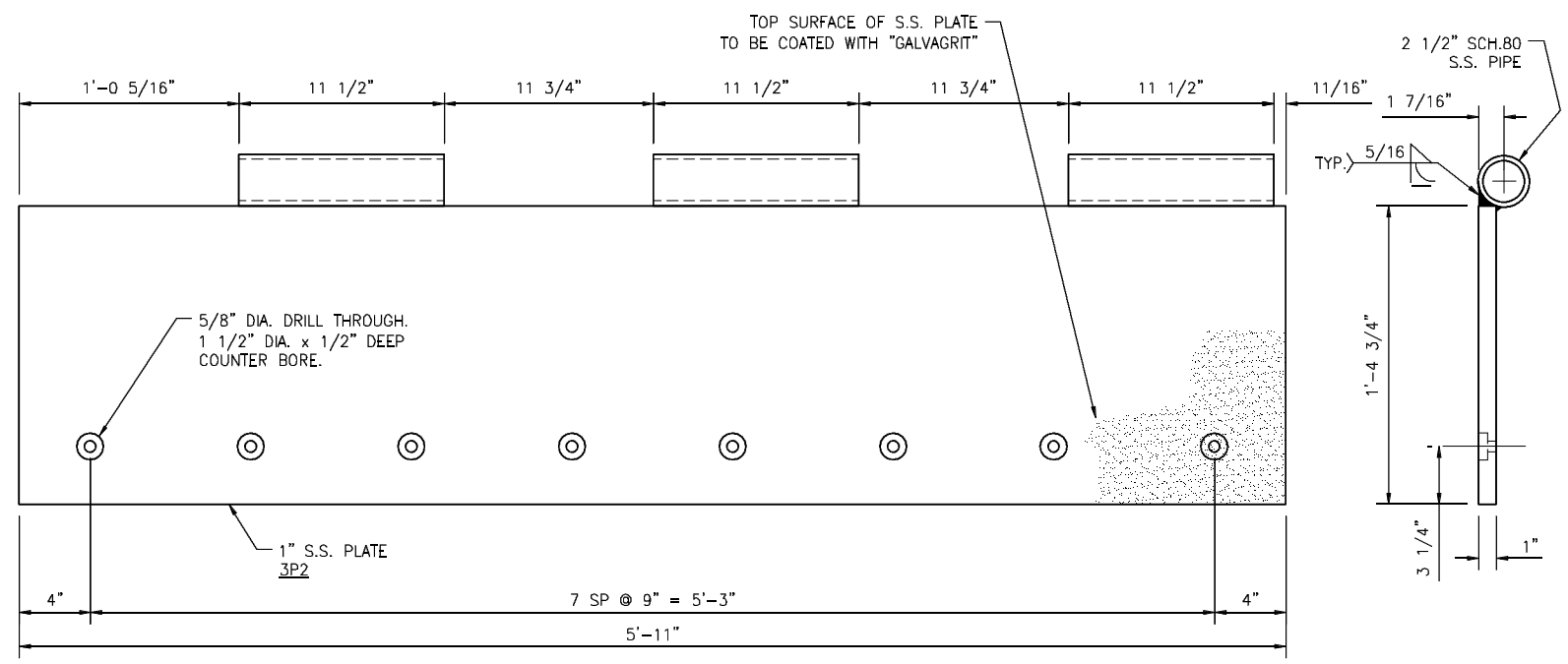

INSPECTION REQUIRED

EMB154768AB QTY: 4 REQD. **STRUCTURED BILL OF MATERIALS**

LV	PART NO.	QTY	UM	DESCRIPTION	MATERIAL	REVISION
0	EMB154768AB	1.00	EA	EMB; RAMP/FLOAT - ROADWAY ASSY.; 5.92'	UNCOATED	
					SHIPPING LENGTH = 6'±	
				GALVAGRIT (FINE) COATING ON TOP SURFACES OF 1" PLATES	APPROX. SHIPPING WEIGHT = 870 lb	
1	NTS154768A	760.00	LB	STNLS STL 1" TYPE 304 NO FIN	3P1, 3P2	
1	NTS154768B	6.00	FT	2 1/2" SCH.80 S.S. PIPE (A)		
1	NTS154768D	5.75	FT	ROUND BAR 2" S.S. 304 (A)	3B1	
			#N/A	#N/A		

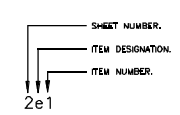

MARK SYSTEM

STATE: VERMONT
COUNTY: ORANGE
PROJECT NO.: BRF FLBR(2)
REFERENCE NO.: XXXXXXXXX
DISTRICT: XXX ROUTE: 65
WBA PRODUCT NO.: EMB154768AA–AF

DRAWING ACTION:

SUBMITTED FOR APPROVAL

DATE: 6/5/14

NO.	DESCRIPTION	NAME	DATE
3			
2			
1			

Information provided herein, including but not limited to, any drawing, design, photograph, graphic, or statement(s) ("Materials") are proprietary and the property of Watson Bowman Acme Corporation ("Company"). Reproduction, translation, or reduction to any electronic medium or machine readable form, in whole or part, is strictly prohibited, except for the express purpose for which it has been furnished, without prior written consent of Company. All Materials contained herein are provided by Company for information purposes only. Company reserves the right to amend or withdraw any information contained in the Materials without notice. All technical or other advice by Company, whether verbal or written, concerning products, or the use of products in specific situations ("Advice") is given by Company and is used at the Users own risk.

Watson Bowman Acme
Watson Bowman Acme Corp.
95 Pineview Drive
Amherst, NY 14228
phone: (716)691-7566
fax: (716)691-0239
www.wbacorp.com

BASF The Chemical Company

PROJECT:
VERMONT RTE 65
REPLACEMENT OF FLOATING BRIDGE

WABO EMB HINGED SLIDING PLATE JOINT DETAILS

DETAILED BY:	DATE:
TEB	6/4/14
CHECKED BY:	DATE:
TPL	6/6/14
SCALE:	WBA JOB NO.:
NONE	154768
SHEET NO.:	DRAWING NO.:
3 OF 6	D–31790

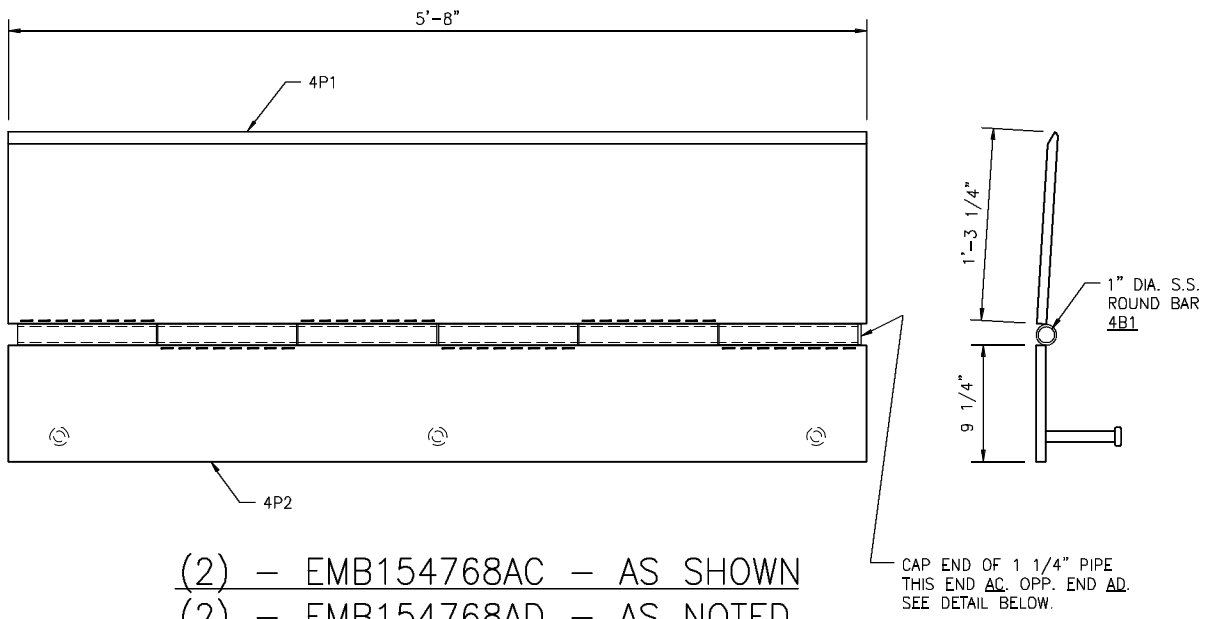

(2) – EMB154768AC – AS SHOWN
(2) – EMB154768AD – AS NOTED

ABUTMENT / RAMP – SIDEWALK ASSEMBLY

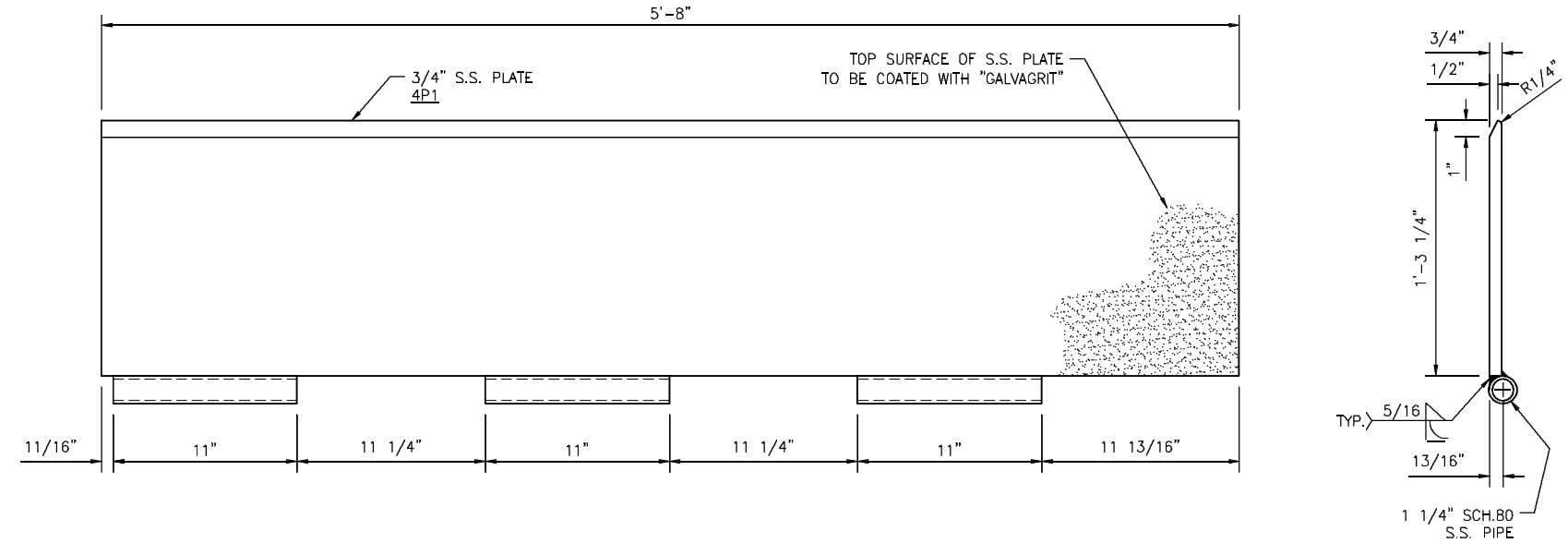

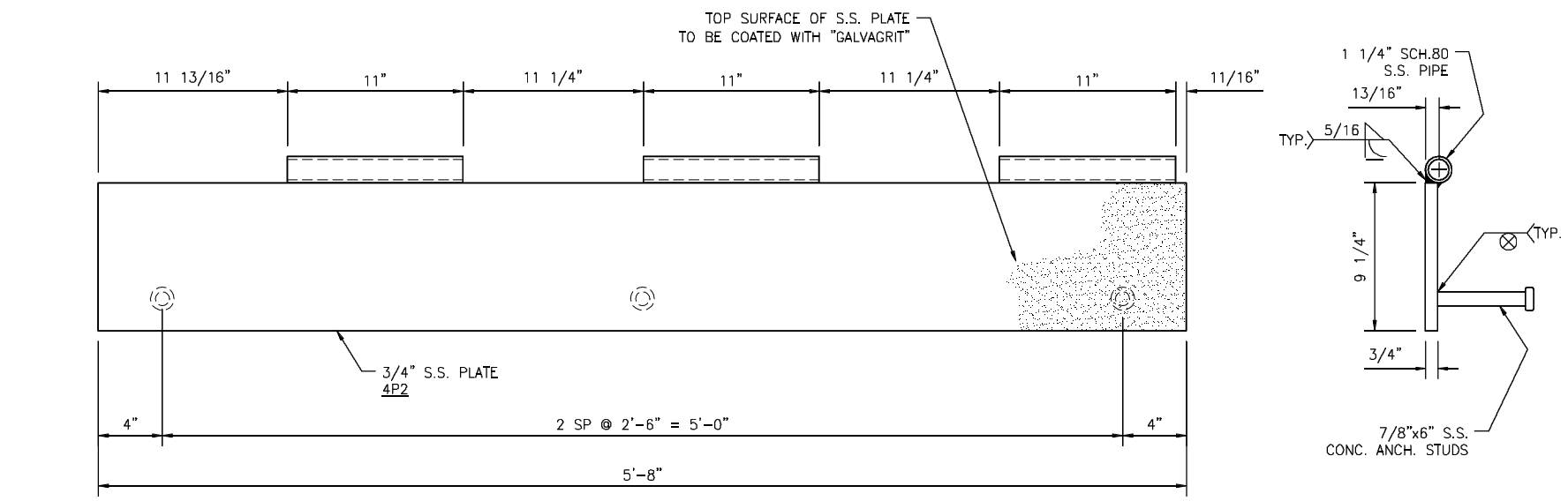

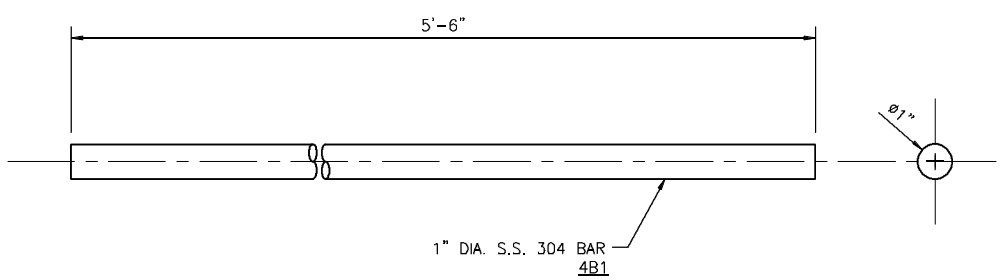

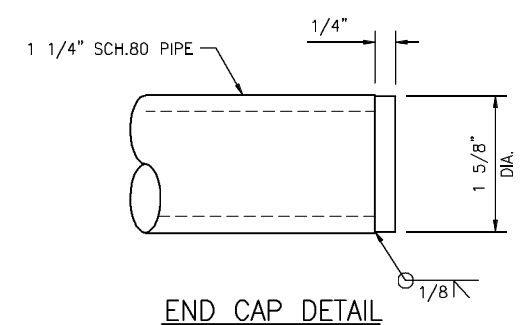

END CAP DETAIL

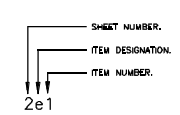

MARK SYSTEM

INSPECTION REQUIRED

EMB154768AC QTY: 2 REQD. **STRUCTURED BILL OF MATERIALS**

LV	PART NO.	QTY	UM	DESCRIPTION	MATERIAL	REVISION
0	EMB154768AC	1.00	EA	EMB; ABUT/RAMP - SIDEWALK ASSY.; 5.67'	UNCOATED	
					SHIPPING LENGTH = 6'±	
				GALVAGRIT (FINE) COATING ON TOP SURFACES OF 3/4" PLATES	APPROX. SHIPPING WEIGHT = 420 lb	
1	NTS154768E	375.00	LB	STNLS STL 3/4" TYPE 304 NO FIN	4P1, 4P2	
1	NTS154768F	6.00	FT	1 1/4" SCH.80 S.S. PIPE (A)		
1	NTS154768C	3.00	EA	7/8"x6" CONC. ANCH. STUDS S.S. ASTM F593 (A)		
1	NTS154768G	5.75	FT	ROUND BAR 1" S.S. 304 (A)	4B1	
1	8595	0.50	LB	STNLS STL 1/4 TYPE 304 2B FIN		
			#N/A	#N/A		

EMB154768AD QTY: 2 REQD. **STRUCTURED BILL OF MATERIALS**

LV	PART NO.	QTY	UM	DESCRIPTION	MATERIAL	REVISION
0	EMB154768AD	1.00	EA	EMB; ABUT/RAMP - SIDEWALK ASSY.; 5.67'	UNCOATED	
					SHIPPING LENGTH = 6'±	
				GALVAGRIT (FINE) COATING ON TOP SURFACES OF 3/4" PLATES	APPROX. SHIPPING WEIGHT = 420 lb	
1	NTS154768E	375.00	LB	STNLS STL 3/4" TYPE 304 NO FIN	4P1, 4P2	
1	NTS154768F	6.00	FT	1 1/4" SCH.80 S.S. PIPE (A)		
1	NTS154768C	3.00	EA	7/8"x6" CONC. ANCH. STUDS S.S. ASTM F593 (A)		
1	NTS154768G	5.75	FT	ROUND BAR 1" S.S. 304 (A)	4B1	
1	8595	0.50	LB	STNLS STL 1/4 TYPE 304 2B FIN		
			#N/A	#N/A		

STATE: VERMONT
COUNTY: ORANGE
PROJECT NO.: BRF FLBR(2)
REFERENCE NO.: XXXXXXXXX
DISTRICT: XXX ROUTE: 65
WBA PRODUCT NO.: EMB154768AA–AF

DRAWING ACTION:

SUBMITTED FOR APPROVAL

DATE: 6/5/14

NO.	DESCRIPTION	NAME	DATE
3			
2			
1			

Information provided herein, including but not limited to, any drawing, design, photograph, graphic, or statement(s) ("Materials") are proprietary and the property of Watson Bowman Acme Corporation ("Company"). Reproduction, translation, or reduction to any electronic medium or machine readable form, in whole or part, is strictly prohibited, except for the express purpose for which it has been furnished, without prior written consent of Company. All Materials contained herein are provided by Company for information purposes only. Company reserves the right to amend or withdraw any information contained in the Materials without notice. All technical or other advice by Company, whether verbal or written, concerning products, or the use of products in specific situations ("Advice") is given by Company and is used at the Users own risk.

Watson Bowman Acme Corp.
95 Pineview Drive
Amherst, NY 14228
phone: (716)691-7566
fax: (716)691-6039
www.wbacorp.com

The Chemical Company

PROJECT:
VERMONT RTE 65
REPLACEMENT OF FLOATING BRIDGE

WABO EMB HINGED SLIDING PLATE JOINT DETAILS

DETAILED BY: TEB	DATE: 6/4/14
CHECKED BY: TPL	DATE: 6/6/14
SCALE: NONE	WBA JOB NO.: 154768
SHEET NO.: 4 OF 6	DRAWING NO.: D–31790

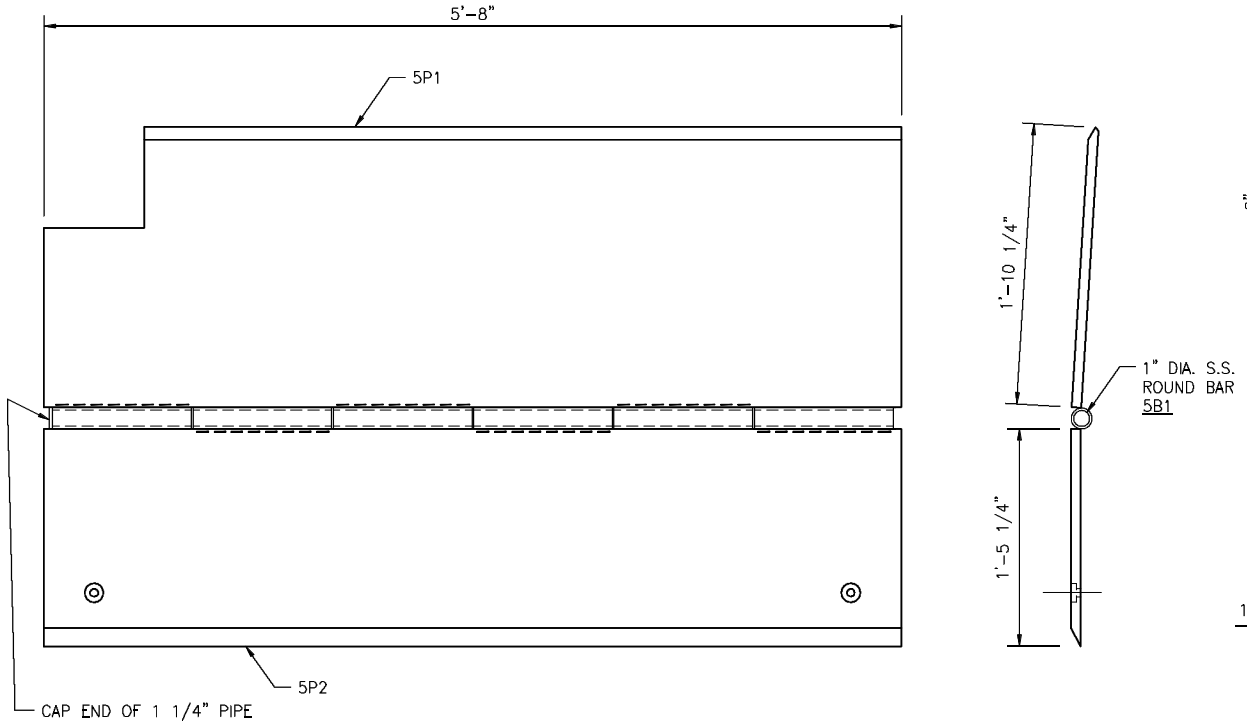

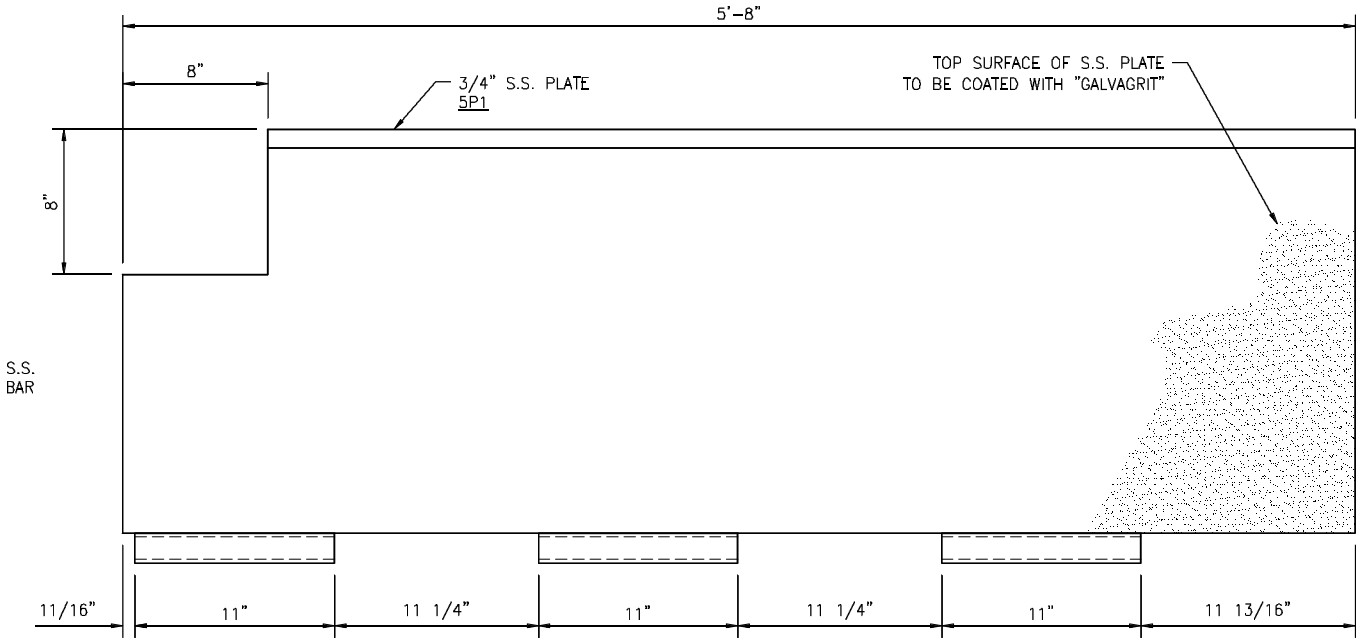

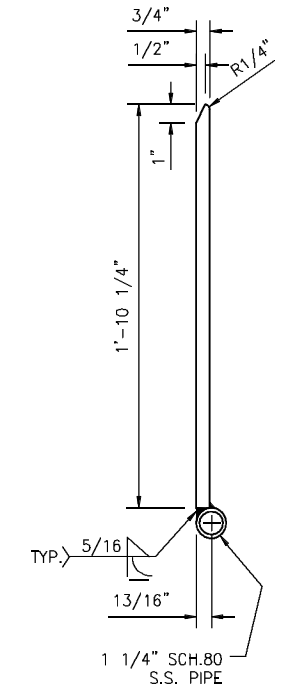

(2) – EMB154768AE – AS SHOWN
(2) – EMB154768AF – OPP. HAND

RAMP / FLOAT – SIDEWALK ASSEMBLY

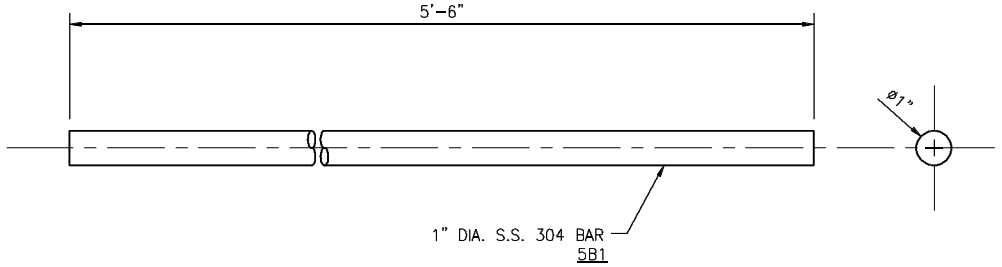

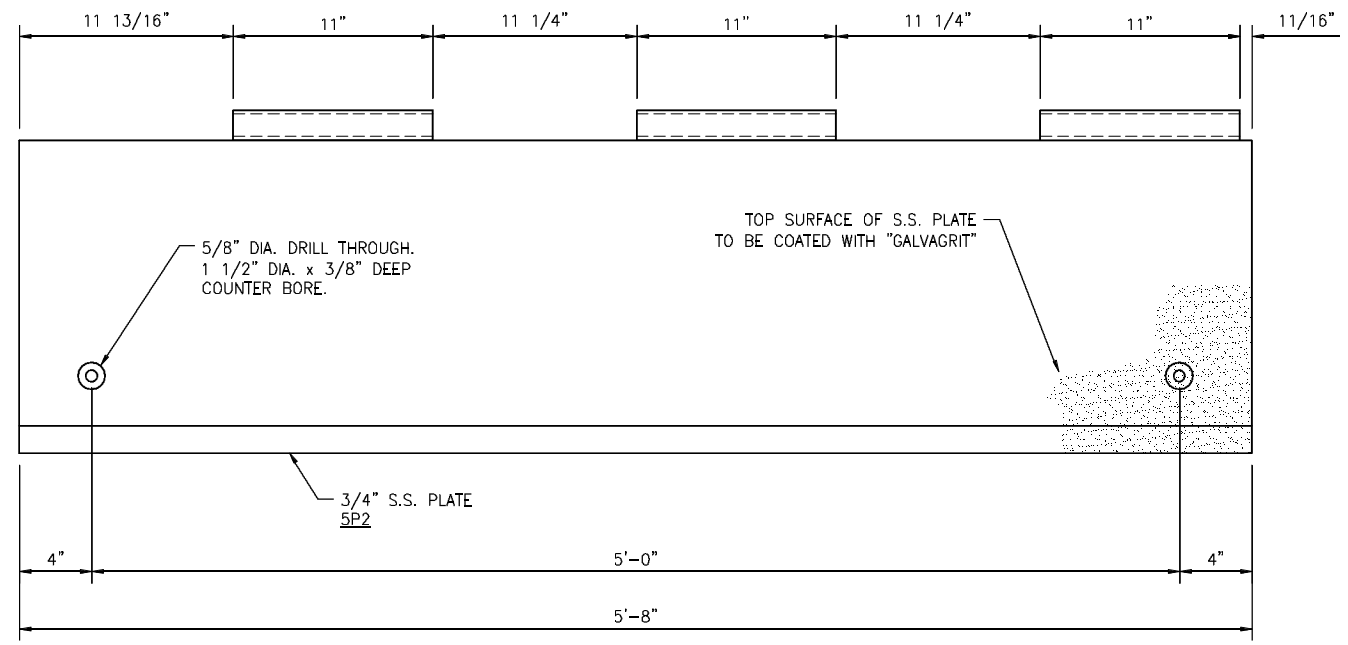

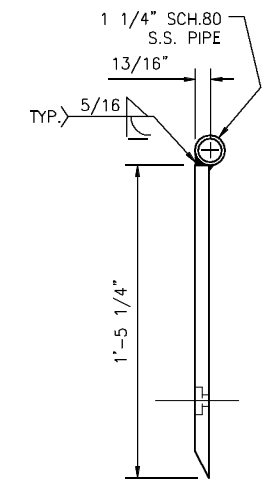

EMB154768AE QTY: 2 REQ'D. **STRUCTURED BILL OF MATERIALS**

LV	PART NO.	QTY	UM	DESCRIPTION	MATERIAL	REVISION
0	EMB154768AE	1.00	EA	EMB; RAMP/FLOAT - SIDEWALK ASSY.; 5.67'	UNCOATED	
					SHIPPING LENGTH = 6'±	
				GALVAGRIT (FINE) COATING ON TOP SURFACES OF 3/4" PLATES	APPROX. SHIPPING WEIGHT = 650 lb	
1	NTS154768E	600.00	LB	STNLS STL 3/4" TYPE 304 NO FIN	5P1, 5P2	
1	NTS154768F	6.00	FT	1 1/4" SCH.80 S.S. PIPE (A)		
1	NTS154768G	5.75	FT	ROUND BAR 1" S.S. 304 (A)	5B1	
1	8595	0.50	LB	STNLS STL 1/4 TYPE 304 2B FIN		
			#N/A	#N/A		

EMB154768AF QTY: 2 REQ'D. **STRUCTURED BILL OF MATERIALS**

LV	PART NO.	QTY	UM	DESCRIPTION	MATERIAL	REVISION
0	EMB154768AF	1.00	EA	EMB; RAMP/FLOAT - SIDEWALK ASSY.; 5.67'	UNCOATED	
					SHIPPING LENGTH = 6'±	
				GALVAGRIT (FINE) COATING ON TOP SURFACES OF 3/4" PLATES	APPROX. SHIPPING WEIGHT = 650 lb	
1	NTS154768E	600.00	LB	STNLS STL 3/4" TYPE 304 NO FIN	5P1, 5P2	
1	NTS154768F	6.00	FT	1 1/4" SCH.80 S.S. PIPE (A)		
1	NTS154768G	5.75	FT	ROUND BAR 1" S.S. 304 (A)	5B1	
1	8595	0.50	LB	STNLS STL 1/4 TYPE 304 2B FIN		
			#N/A	#N/A		

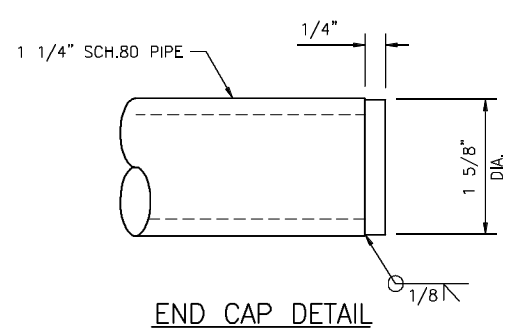

END CAP DETAIL

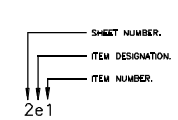

MARK SYSTEM

INSPECTION REQUIRED

STATE: VERMONT
COUNTY: ORANGE
PROJECT NO.: BRF FLBR(2)
REFERENCE NO.: XXXXXXXXX
DISTRICT: XXX ROUTE: 65
WBA PRODUCT NO.: EMB154768AA–AF

DRAWING ACTION:

SUBMITTED FOR APPROVAL

DATE: 6/5/14

NO.	DESCRIPTION	NAME	DATE
3			
2			
1			

Information provided herein, including but not limited to, any drawing, design, photograph, graphic, or statement(s) ("Materials") are proprietary and the property of Watson Bowman Acme Corporation ("Company"). Reproduction, translation, or reduction to any electronic medium or machine readable form, in whole or part, is strictly prohibited, except for the express purpose for which it has been furnished, without prior written consent of Company. All Materials contained herein are provided by Company for information purposes only. Company reserves the right to amend or withdraw any information contained in the Materials without notice. All technical or other advice by Company, whether verbal or written, concerning products, or the use of products in specific situations ("Advice") is given by Company and is used at the Users own risk.

Watson Bowman Acme
Watson Bowman Acme Corp.
95 Pineview Drive
Amherst, NY 14228
phone: (716)691-7568
fax: (716)691-0239
www.wbacorp.com

BASF The Chemical Company

PROJECT:
VERMONT RTE 65
REPLACEMENT OF FLOATING BRIDGE

WABO EMB HINGED SLIDING PLATE JOINT DETAILS

DETAILED BY: TEB	DATE: 6/4/14
CHECKED BY: TPL	DATE: 6/6/14
SCALE: NONE	WBA JOB NO.: 154768
SHEET NO.: 5 OF 6	DRAWING NO.: D–31790

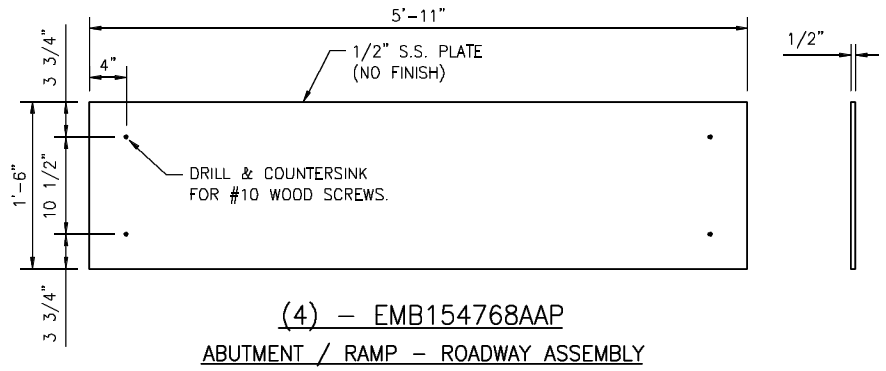

(4) – EMB154768AAP

ABUTMENT / RAMP – ROADWAY ASSEMBLY

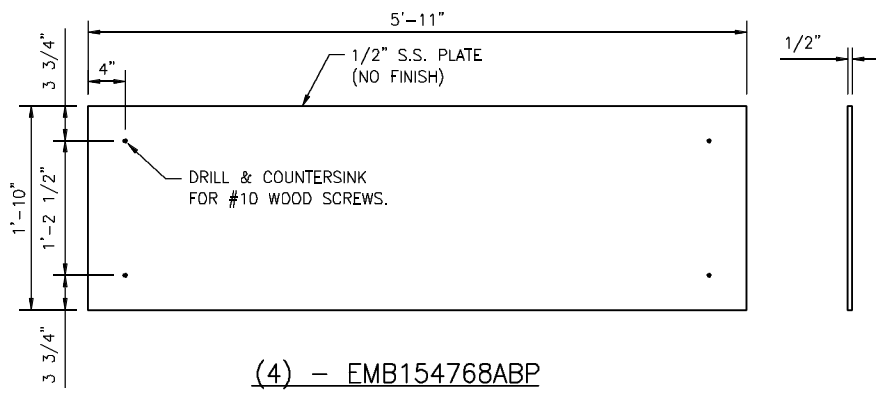

(4) – EMB154768ABP

RAMP / FLOAT – ROADWAY ASSEMBLY

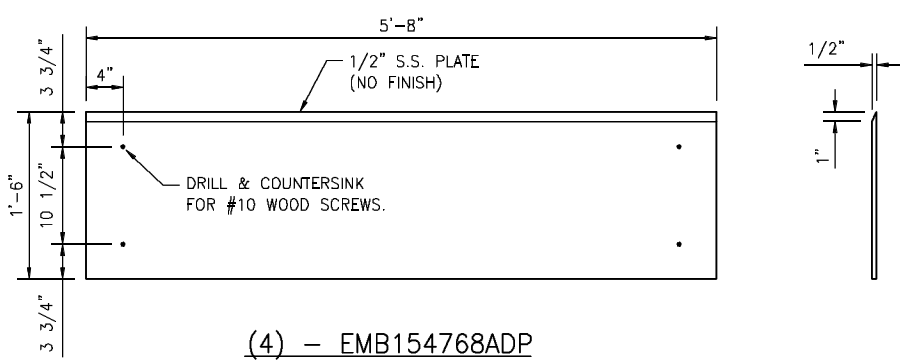

(4) – EMB154768ADP

ABUTMENT / RAMP – SIDEWALK ASSEMBLY

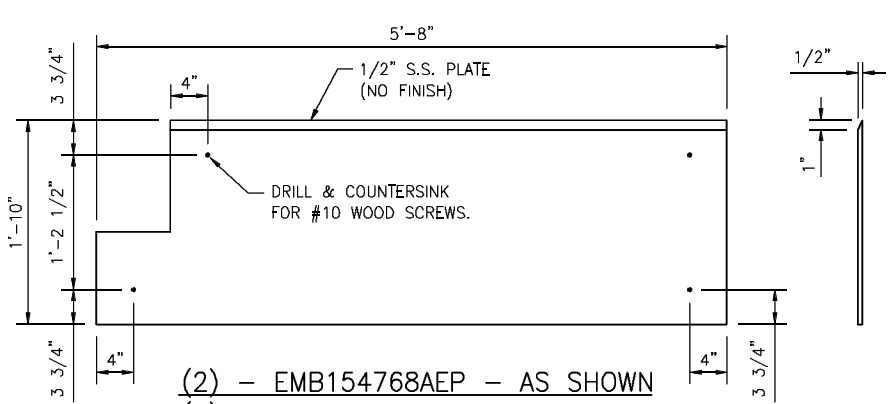

(2) – EMB154768AEP – AS SHOWN

(2) – EMB154768AFP – OPP. HAND

RAMP / FLOAT – SIDEWALK ASSEMBLY

EMB154768AAP QTY: 4 REQ'D. **STRUCTURED BILL OF MATERIALS**

LV	PART NO.	QTY	UM	DESCRIPTION	MATERIAL	REVISION
0	EMB154768AAP	1.00	EA	EMB; ABUT/RAMP - ROADWAY BEARING PLATE.	UNCOATED	
					SHIPPING LENGTH = 6'±	
					APPROX. SHIPPING WEIGHT = 195 lb	
1	8591	195.00	LB	STNLS STL 1/2 TYPE 304 NO FIN		

EMB154768ABP QTY: 4 REQ'D. **STRUCTURED BILL OF MATERIALS**

LV	PART NO.	QTY	UM	DESCRIPTION	MATERIAL	REVISION
0	EMB154768ABP	1.00	EA	EMB; RAMP/FLOAT - ROADWAY BEARING PLATE.	UNCOATED	
					SHIPPING LENGTH = 6'±	
					APPROX. SHIPPING WEIGHT = 240 lb	
1	8591	240.00	LB	STNLS STL 1/2 TYPE 304 NO FIN		

EMB154768ADP QTY: 4 REQ'D. **STRUCTURED BILL OF MATERIALS**

LV	PART NO.	QTY	UM	DESCRIPTION	MATERIAL	REVISION
0	EMB154768ADP	1.00	EA	EMB; ABUT/RAMP - SIDEWALK BEARING PLATE.	UNCOATED	
					SHIPPING LENGTH = 6'±	
					APPROX. SHIPPING WEIGHT = 185 lb	
1	8591	185.00	LB	STNLS STL 1/2 TYPE 304 NO FIN		

EMB154768AEP QTY: 2 REQ'D. **STRUCTURED BILL OF MATERIALS**

LV	PART NO.	QTY	UM	DESCRIPTION	MATERIAL	REVISION
0	EMB154768AEP	1.00	EA	EMB; RAMP/FLOAT - SIDEWALK BEARING PLATE.	UNCOATED	
					SHIPPING LENGTH = 6'±	
					APPROX. SHIPPING WEIGHT = 225 lb	
1	8591	225.00	LB	STNLS STL 1/2 TYPE 304 NO FIN		

EMB154768AFP QTY: 2 REQ'D. **STRUCTURED BILL OF MATERIALS**

LV	PART NO.	QTY	UM	DESCRIPTION	MATERIAL	REVISION
0	EMB154768AFP	1.00	EA	EMB; RAMP/FLOAT - SIDEWALK BEARING PLATE.	UNCOATED	
					SHIPPING LENGTH = 6'±	
					APPROX. SHIPPING WEIGHT = 225 lb	
1	8591	225.00	LB	STNLS STL 1/2 TYPE 304 NO FIN		

EMB154768PS1 QTY: 1 REQ'D. **STRUCTURED BILL OF MATERIALS**

LV	PART NO.	QTY	UM	DESCRIPTION	MATERIAL	REVISION
0	EMB154768PS1	1.00	EA	PARTS FOR SHIPPING (V		
1	NTS154768H	32.00	EA	LAG BOLT 1/2"x5" S.S. (A)		
1	NTS154768J	8.00	EA	LAG BOLT 1/2"x8" S.S. (A)		
1	NTS154768K	75.00	EA	WOOD SCREW #10x3 1/2" S.S. (A)		
1	7540	45.00	EA	WASHER 1/2 (A) STAINLESS STEEL		

INSPECTION REQUIRED

SHEET NUMBER.
ITEM DESIGNATION.
ITEM NUMBER.
2e1

MARK SYSTEM

STATE: VERMONT
COUNTY: ORANGE
PROJECT NO.: BRF FLBR(2)
REFERENCE NO.: XXXXXXXXX
DISTRICT: XXX ROUTE: 65
WBA PRODUCT NO.: EMB154768AA–AF

DRAWING ACTION:

SUBMITTED FOR APPROVAL

DATE: 6/5/14

NO.	DESCRIPTION	NAME	DATE
3			
2			
1			

Information provided herein, including but not limited to, any drawing, design, photograph, graphic, or statement(s) ("Materials") are proprietary and the property of Watson Bowman Acme Corporation ("Company"). Reproduction, translation, or reduction to any electronic medium or machine readable form, in whole or part, is strictly prohibited, except for the express purpose for which it has been furnished, without prior written consent of Company. All Materials contained herein are provided by Company for information purposes only. Company reserves the right to amend or withdraw any information contained in the Materials without notice. All technical or other advice by Company, whether verbal or written, concerning products, or the use of products in specific situations ("Advice") is given by Company and is used at the Users own risk.

Watson Bowman Acme
Watson Bowman Acme Corp.
95 Pineview Drive
Amherst, NY 14228
phone: (716)691-7566
fax: (716)691-0239
www.wbacorp.com

BASF The Chemical Company

PROJECT:
VERMONT RTE 65
REPLACEMENT OF FLOATING BRIDGE

WABO EMB HINGED SLIDING PLATE JOINT DETAILS

DETAILED BY: TEB	DATE: 6/4/14
CHECKED BY: TPL	DATE: 6/6/14
SCALE: NONE	WBA JOB NO.: 154768
SHEET NO.: 6 OF 6	DRAWING NO.: D–31790