MILLER CONSTRUCTION, INC.

P.O. BOX 86 ASCUTNEY BLVD WINDSOR, VERMONT 05089-0086
TELEPHONE (802) 674-5525 / FAX (802) 674-5245

TRANSMITTAL

TO: Jennifer Fitch, PE Project Manager Vermont Agency of Transportation	DATE	PROJECT NO.
	5/6/2014	Brookfield BRF FLBR (2)

XX WE ENCLOSE THE FOLLOWING: _____ UNDER SEPARATE COVER WE ARE SENDING THE FOLLOWING

COPIES	NUMBER	DESCRIPTION	CODE
1		Cross Frame Bracket and Field Splice Cover Shop Drawings	H
1		Cross Frame Bracket WPS	H

CODE:

A FOR INITIAL APPROVAL
B FOR FINAL APPROVAL
C APPROVED AS NOTED-RESUBMISSION REQUIRED
D APPROVED AS NOTED-RESUBMISSION NOT REQUIRED
E DISAPPROVED-RESUBMIT
F QUOTATION REQUESTED
G APPROVED
H FOR APPROVAL
I AS REQUESTED OR REQUIRED
J FOR USE IN ERECTION
K LETTER FOLLOWS
L FOR FIELD CHECK
M FOR YOUR USE

BY: Paul

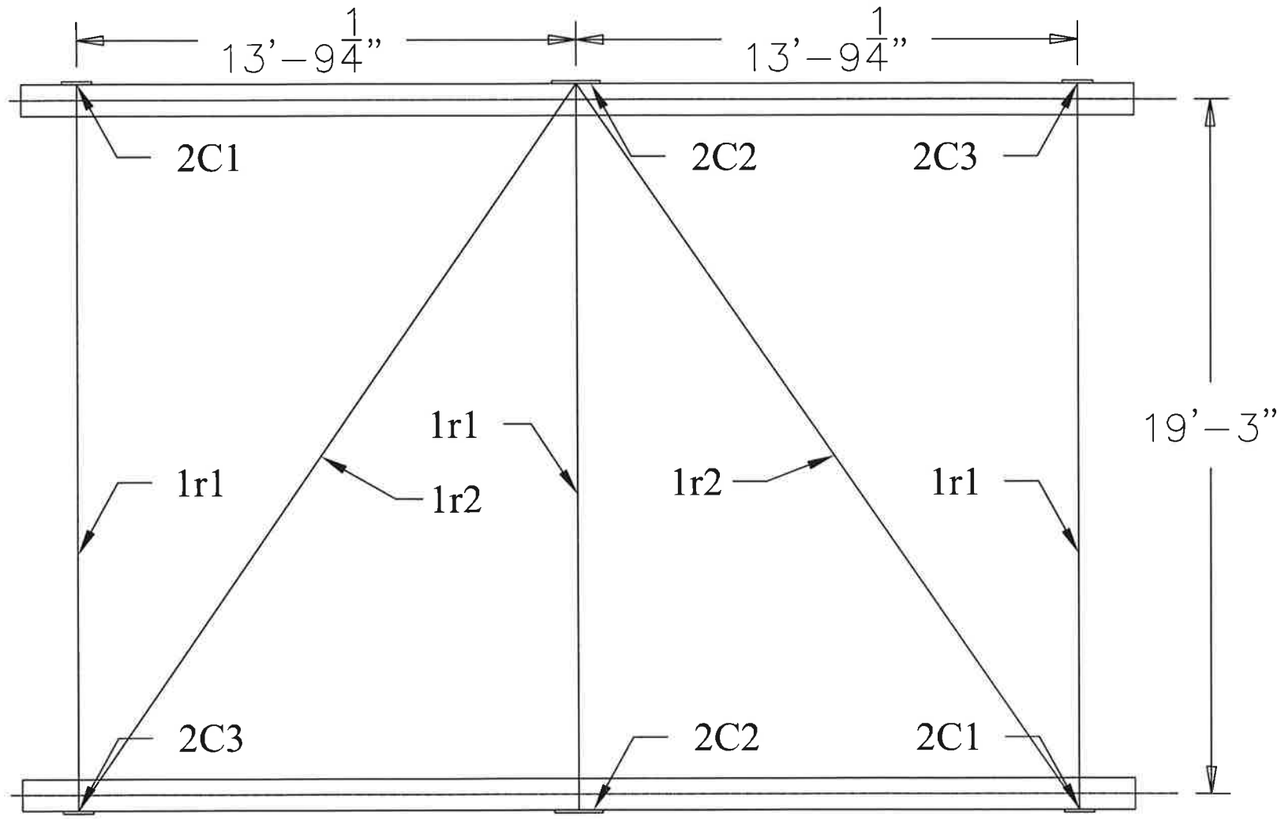

(1) - 1E1 EAST RAMP FRAMING
(1) - 1W1 WEST RAMP FRAMING

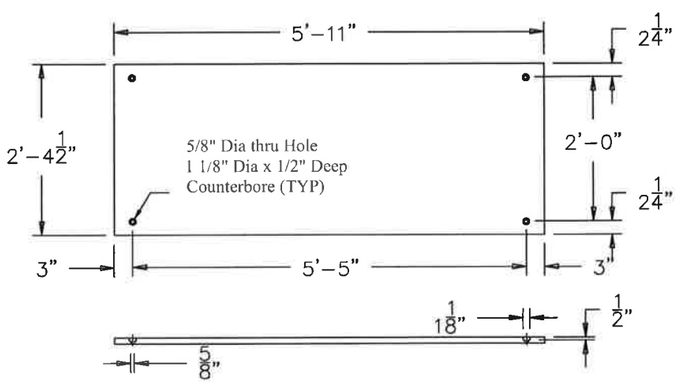

(8) - 1P1 STEEL COVER PLATE

BILL OF MATERIALS

QTY	MARK	SHAPE	LENGTH	REMARKS
1	1E1	EAST FRAMING PLAN		
2	2C1	Cross Frame Bracket 1		
4	2C2	Cross Frame Bracket 2		
2	2C3	Cross Frame Bracket 3		
3	1r1	1" Dia Threaded Rod x 20'-9 1/2" lg with 4 Nuts & 2 Hardended Steel Washers		
2	1r2	1" Dia Threaded Rod x 25'-6" lg with 4 Nuts & 2 Hardended Steel Washers		
1	1W1	WEST FRAMING PLAN		
2	2C1	Cross Frame Bracket 1		
4	2C2	Cross Frame Bracket 2		
2	2C3	Cross Frame Bracket 3		
3	1r1	1" Dia Threaded Rod x 20'-9 1/2" lg with 4 Nuts & 2 Hardended Steel Washers		
2	1r2	1" Dia Threaded Rod x 25'-6" lg with 4 Nuts & 2 Hardended Steel Washers		
8	1P1	STEEL COVER PLATE		
8	1p1	Plate 1" x 2'-4 1/2"	5'-11"	

RAMP FRAMING MATERIAL NOTES

1. ALL STRUCTURAL STEEL SHALL CONFORM TO AASHTO M 270 GRADE 36.
2. ALL STRUCTURAL STEEL AND FASTENERS SHALL BE HOT-DIP GALVANIZED IN ACCORDANCE WITH AASHTO M 111 AND M 232.

REV NO.	DATE	DESCRIPTION
		DATE SUBMITTED
0	5-5-2014	SUBMITTED FOR APPROVAL

HOLES AS NOTED

MATERIAL: AASHTO M 270 GRADE 36 GALV

DRAWING COVERS

TIMBER BRIDGE SUPPORT DETAILS

PROJECT	BROOKFIELD BRF FLBR(2)
LOCATION	VT ROUTE 65 OVER WESTERN AND EASTERN RAMP
ENGINEER	T Y LIN INTERNATIONAL
CUSTOMER	MILLER CONSTRUCTION

MERRIMACK SHEET METAL

119 HALL STREET
CONCORD NH 03301

Tel. 603.224.7766
Fax 603.224.7925

DRAWN BY: RL
CHECKED BY: JD
JOB NO: #5414
DWG: F1

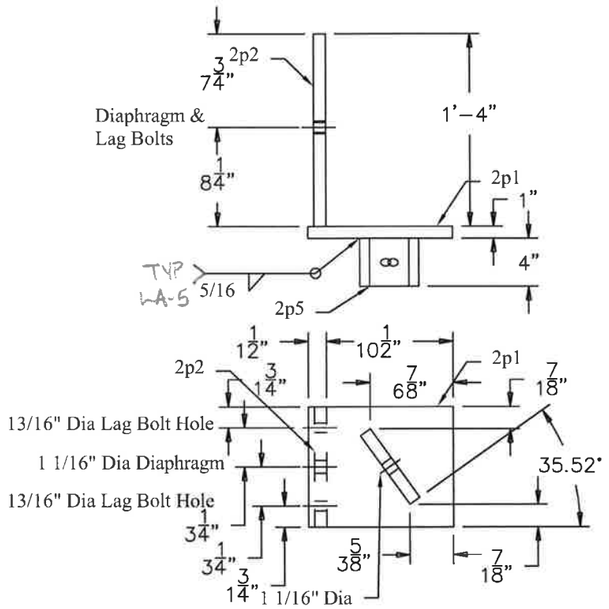

(4) - 2C1 CROSS FRAME BACKET

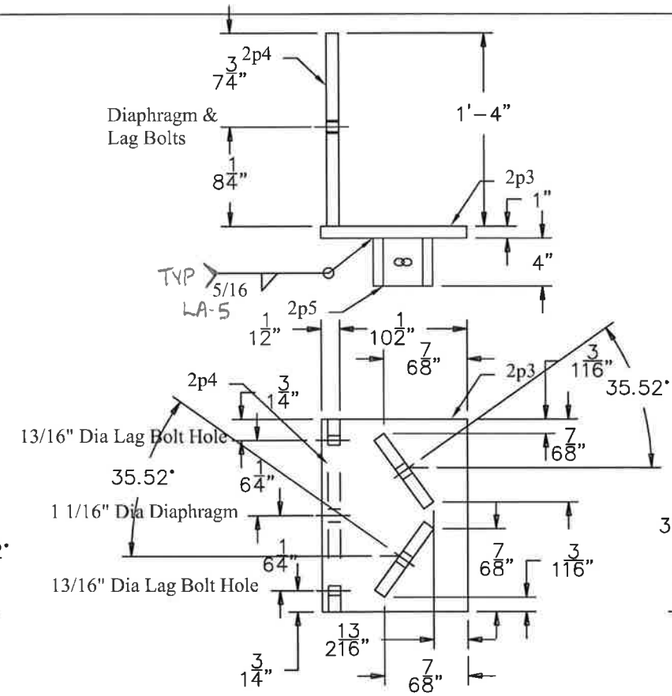

(4) - 2C2 CROSS FRAME BACKET

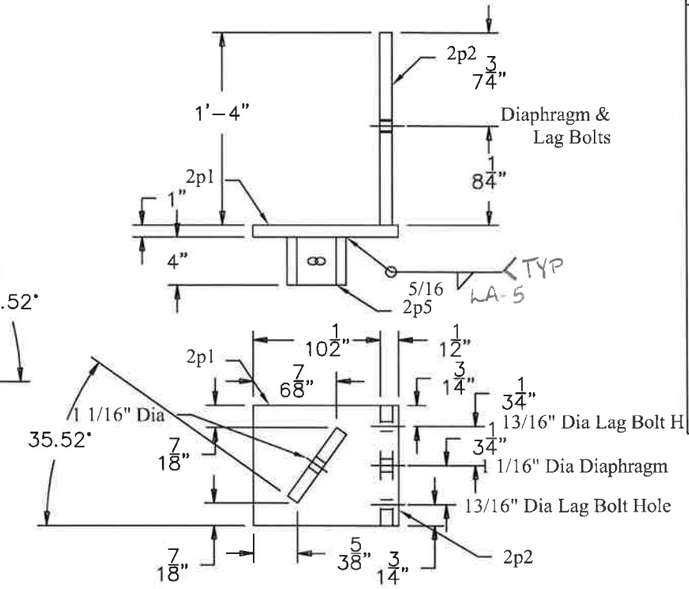

(4) - 2C3 CROSS FRAME BACKET

BILL OF MATERIALS

QTY	MARK	SHAPE	LENGTH	REMARKS
4	2C1	CROSS FRAME BRACKET 1		
4	2p1	Plate 1" x 10"	1'-0"	
4	2p2	Plate 1" x 10"	1'-4"	
4	2p5	Plate 1" x 4"	0'-7"	
4	2C2	CROSS FRAME BRACKET 2		
4	2p3	Plate 1" x 12"	1'-4"	
4	2p4	Plate 1" x 16"	1'-4"	
8	2p5	Plate 1" x 4"	0'-7"	
4	2C3	CROSS FRAME BRACKET 3		
4	2p1	Plate 1" x 10"	1'-0"	
4	2p2	Plate 1" x 10"	1'-4"	
4	2p5	Plate 1" x 4"	0'-7"	

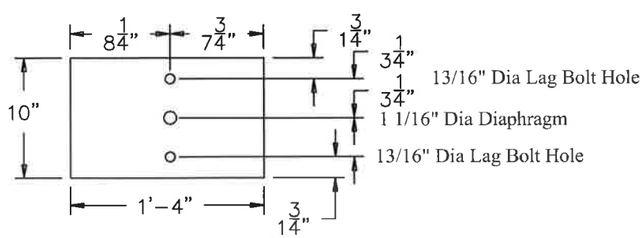

(8) - 2p2 Plate Details

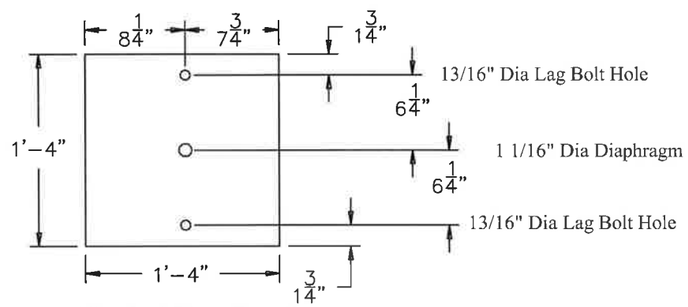

(4) - 2p4 Plate Details

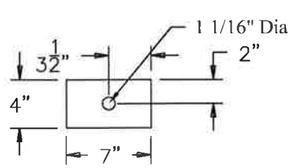

(16) - 2p5 Plate Details

		DATE SUBMITTED
0	5-5-2014	SUBMITTED FOR APPROVAL
REV NO.	DATE	DESCRIPTION

HOLES AS NOTED

MATERIAL: AASHTO M 270 GRADE 36 GALV

DRAWING COVERS

TIMBER BRIDGE CROSS FRAME BRACKETS

PROJECT	BROOKFIELD BRF FLBR(2)
LOCATION	VT ROUTE 65 OVER WESTERN AND EASTERN RAMP
ENGINEER	T Y LIN INTERNATIONAL
CUSTOMER	MILLER CONSTRUCTION

MERRIMACK SHEET METAL

119 HALL STREET
CONCORD NH 03301

Tel. 603.224.7766
Fax 603.224.7925

DRAWN BY: RL

CHECKED BY: JD

JOB NO: #5414

DWG: F2

WELDING PROCEDURE SPECIFICATION (WPS)
PREQUALIFIED ☐ QUALIFIED BY TESTING ■
or PROCEDURE QUALIFICATION RECORDS (PQR) Yes ☐
AASHTO/AWS D1.5 Qualification Type 5.12.1 ☐ – 5.12.2 ☐ – 5.13 ☐

Contractor/
Organization MERRIMACK SHEET METAL
Welding Process(es) GMAW
Type: Manual ☐ Semiautomatic ■
Machine ☐ Automatic ☐
Tandem ☐ Parallel ☐

JOINT DESIGN USED
Single ■ Double Weld ■
Backing: Yes ☐ No ■ Material
Root Opening NA Root Face Dimension NA
Groove Angle NA Radius (J–U)
Backgouging: Yes ☐ No ■ Method
Root Treatment CLEAN TO BRIGHT METAL

BASE METALS
Material Spec. A36 ; A588 ; A709 ;
Type or Grade G50
Thickness: Groove NA Fillet UNLIMITED
Diameter (Pipe) NA

FILLER METALS
AWS Specification A5.28
AWS Classification ER80S-Ni1
Manufacturer Trade Name LINCOLN SUPERARC LA-75

SHIELDING
Flux NA Mfg. Trade Name NA
Electrode-Flux (Class) NA
Gas Composition 90% ARGON / 10% CO2
Flow Rate 45 CFH Gas Cup Size 3/4

Identification LA-5
Revision 0 Date 6/1/2010 By KK
Authorized by KK Date 6/1/2010
Supporting PQR No.(s) PQLA1

POSITION
Position of Groove NA Fillet 1F or 2F
Vertical Progression: Up ■ Down ☐

ELECTRICAL CHARACTERISTICS
Transfer Mode (GMAW): Globular ☐ Spray ■
Current: AC ☐ DCEP ■ DCEN ☐ Pulsed ☐
Electrical Stick Out 3/4
Other

TECHNIQUE
Stringer or Weave Bead BOTH
Multi-pass or Single Pass (per side) BOTH
Number of Electrodes 1
Electrode Spacing: Longitudinal NA
Lateral NA Angle NA
Interpass Cleaning CLEAN WITH WIRE BRUSH

PREHEAT
Preheat Temp., Min. 70 F
Interpass Temp., Min. 70 F
Interpass Temp., Max. 400 F

POSTWELD HEAT TREATMENT
Temp. NA Hold Time NA
Heating/Cooling Rate NA

HEAT INPUT
Calculated Heat Input Value: kJ/in ■ kJ/mm ☐
Max. Heat Input 42.7 Min. Heat Input 22.5

WELDING PROCEDURE

Pass or Weld Layer(s)	Process	Filler Metals	Current		Volts	Travel Speed	Joint Details
		Diam.	Type & Polarity	Amps or Wire Feed Speed			
ROOT 3/16	GMAW	.045	DCEP	220- 260	26-29	15-18 IPM	LA-5-1F 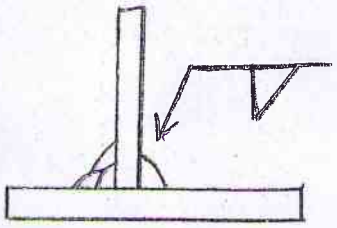
ROOT 1/4	GMAW	.045	DCEP	220- 260	26-29	14-17 IPM	
ROOT 5/16	GMAW	.045	DCEP	220-270	26-29	13-16 IPM	
ROOT 3/8	GMAW	.045	DCEP	220-270	26-29	12-15 IPM	
2ND 3/8	GMAW	.045	DCEP	220-270	26-29	11-14 IPM	
3RD 3/8	GMAW	.045	DCEP	220-270	26-29	11-14 IPM	
ROOT 7/16	GMAW	.045	DCEP	220-270	26-29	12-15 IPM	
2ND 7/16	GMAW	.045	DCEP	220-270	26-29	12-14 IPM	
3RD 7/16	GMAW	.045	DCEP	220-270	26-29	12-15 IPM	

Form L-2

Form L-2—Sample Welding Procedure Specification