MILLER CONSTRUCTION, INC.

P.O. BOX 86 ASCUTNEY BLVD WINDSOR, VERMONT 05089-0086
TELEPHONE (802) 674-5525 / FAX (802) 674-5245

TRANSMITTAL

TO: Jennifer Fitch, PE Project Manager Vermont Agency of Transportation	DATE	PROJECT NO.
	6/16/2014	Brookfield BRF FLBR (2)

XX WE ENCLOSE THE FOLLOWING: _____ UNDER SEPARATE COVER WE ARE SENDING THE FOLLOWING

COPIES	NUMBER	DESCRIPTION	CODE
1		FRP Fabrication QCQA Plan - Rev 1	H

CODE:

A FOR INITIAL APPROVAL
B FOR FINAL APPROVAL
C APPROVED AS NOTED-RESUBMISSION REQUIRED
D APPROVED AS NOTED-RESUBMISSION NOT REQUIRED
E DISAPPROVED-RESUBMIT
F QUOTATION REQUESTED
G APPROVED
H FOR APPROVAL
I AS REQUESTED OR REQUIRED
J FOR USE IN ERECTION
K LETTER FOLLOWS
L FOR FIELD CHECK
M FOR YOUR USE

BY: Paul

Rev 1 Changes to Quality Assurance Submittal

Item	Comment	Resolution
1	Identify production hold points	Hold points are identified on the job tag (which has been added as an attachment) where QA signoff is not shaded out and on the assembly checklist (all listed tasks)
2	Organization Chart not attached	Org chart is now attached
3	Add inspection documentation to 3.2.1 Minimum Documentation	h) Inspection/quality documentation has been added to 3.2.1
4	What about form work inspection?	Form work inspection is conducted prior to laying up each part and is checked off on the Job Tag (see attached)
5	Any QC of the foam or MMA?	Where adhesive or foam is dispensed from a system, the procedure specific to the equipment for verifying proper mix ratio must be executed each time the dispensing equipment is brought online. A QC log sheet is attached for the foam and adhesive guns along with an excerpt from the foam gun operator manual
6	Frequency of acetone sensitivity test?	Testing is performed on one random location per part unless Barcol test results are lower than required at which time two additional tests will be conducted
7	Any testing for full wetting of parts?	Where full wetting of parts cannot be confirmed by visual inspection alone, an ultrasonic tester will be used to assess proper wet out. Areas that must be inspected include the center of any resin close outs as observed during the infusion process
8	Is there a document used for logging project tolerances?	Part tolerances will be logged on the infusion checklist and assembly tolerances will be logged on the assembly checklist

9	M-7? Repair procedures shall be submitted and approved	QA Manual was changed from Appendix M-9 to M-7; repairs to laminates shall be in accordance with T9008-B4-MAN-010 Inspection and Repair Manual for Fiber Reinforced Plastic Boats and Craft
10	Should there be an “other” category to cover any potential defect?	Other category has been added to list
11	ASTM specification not entirely applicable to assembly	Form has been updated to reference special provision 900.645 and Kenway drawing 8420-8

KENWAY CORPORATION

QUALITY ASSURANCE PROGRAM

TABLE OF CONTENTS

SECTION 1.0 QUALITY ASSURANCE POLICY 3
1.1 Scope 3
1.2 Purpose 3
1.3 Laboratory Standards 3
1.4 Test Methods 3
1.5 Operating Procedures 3
1.6 Documentation 4
1.7 Nonconformity Correction Reports 4
1.8 Distribution of Quality Assurance Manual 5
1.9 Quality Assurance Manual Revision 5
1.10 Notification of In-Process Changes 5
SECION 2.0 QUALITY ASSURANCE ORGANIZATION 5
2.1 Scope and Purpose 5
2.2 Organizational Responsibility 6
2.3 Organizational Functions 6
SECTION 3.0 DOCUMENTATION 6
3.1 Scope and Purpose 6
3.2 Minimum Documentation 7
3.3 Document Preparation Responsibility 7
SECTION 4.0 INSPECTION OF RECEIVED GOODS 7
4.1 Resin 7
4.2 Reinforcements 8
4.3 Curing Agents 8
4.4 Purchased and/or Subvended Items 9
4.5 Common Additives 9
SECTION 5.0 IN-PROCESS INSPECTION 9
5.1 Resin Mixing 9
5.2 Material Dispersement 10
5.3 Component Fabrication 10
5.4 Assembly 10
SECTION 6.0 FINISHED EQUIPMENT INSPECTION 11
6.1 Resin Cure 11
6.2 Dimensions and Laminate Thickness 11
6.3 Visual Imperfections 11
6.4 Physical Property Tests 12
6.5 Equipment Pressure Tests 12
SECTION 7.0 RECORD RETENTION AND CONTROLS 12
7.1 Scope 12
7.2 Application and Retention 13
7.3 Record Retention 13
7.4 Procedure for Record Handling 13

SECTION 1.0 QUALITY ASSURANCE POLICY

1.1 Scope

This policy establishes the requirements, systems, and procedures for the Quality Assurance Program.

1.2 Purpose

The purposes of the Quality Assurance Program are to:

1.2.1 Ensure adherence to the general principles of ASME RTP-1 requirements through correct and thorough processing of purchase orders, drawings, specifications, and other documents.

1.2.2 Establish an inspection system to monitor the variability of workmanship, processes, and materials in order to produce a consistent, uniform product.

1.2.3 Establish and monitor the quality requirements related to materials and services of Vendors or Subcontractors based on surveillance and performance analysis.

1.2.4 Provide a system for the detection of defect trends and institute corrective measures

1.3 Laboratory Standards

1.3.1 A laboratory standards program is to be maintained for the calibration of the measuring and test equipment.

1.3.2 The program will provide confidence in the accuracy of the measuring and test equipment.

1.4 Test Methods

Specific written inspection and test procedures will be followed for all inspection and test operations.

1.5 Operating Procedures

1.5.1 Parts will be made in the sequence and by the conditions specified in Kenway

Corporation's standard operating procedures.

1.5.2 These production procedures shall be available to Quality Assurance personnel during their audits so as to confirm adherence to them.

1.6 Documentation

1.6.1 Inspection results shall be documented and kept on file as specified by contractual requirements and/or as designated by the project manager.

1.6.2 Inspection documentation shall be by reference to shop order number, part number, or in any manner that will link inspection results with a specific part.

1.6.3 Only approved forms shall be used for the entering of inspection results, as well as for such related items as the purchasing of raw materials, processing orders, and sub-contracting work on orders.

1.6.4 Any change in documentation must be approved by the Quality Assurance Manager and Kenway Management Team.

1.6.5 To ensure that the latest revision of each document is recorded and used during the fabrication process, Engineering shall maintain, update, and distribute the Document Control Sheet at regular intervals. Verification of correct documentation shall occur weekly during management team Production Meetings.

1.7 Nonconformity Correction Reports

1.7.1 When nonconformities or imperfections requiring correction are discovered, a Nonconformity Correction Report shall be initiated by the Quality Assurance Manager.

1.7.2 The report shall be forwarded to Engineering and production management to determine the cause of the nonconformity and to initiate proper corrective action.

1.7.3 The determination shall include:

(a) manufacturing and processing procedures
(b) purchase orders
(c) results of tests

1.7.4 The report shall be reviewed and approved by the Quality Assurance Manager, who will also secure all other reviews and approvals as required.

1.8 Distribution of Quality Assurance Manual

1.8.1 The manual shall be distributed, as necessary, by the Quality Assurance Manager.

1.9 Quality Assurance Manual Revision

1.9.1 The manual shall be revised, as necessary by the Quality Assurance Manager, subject to review and approval of the President.

1.9.2 The manual index shall also be periodically updated by the Quality Assurance Manager.

1.9.3 Manual updating shall be done by all holders upon receipt of a revised section, and the superseded parts shall be destroyed.

1.9.4 The Quality Assurance Manager shall maintain a master record of all manual revisions. See (Table NM6-7).

1.10 Notification of In-Process Changes

1.10.1 Initiator will notify all responsible parties in writing or verbally with written confirmation, depending on the impact of the change.

1.10.2 Changes require engineering approval before implementation.

1.10.3 Necessary documentation will be changed and clearly marked.

SECION 2.0 QUALITY ASSURANCE ORGANIZATION

2.1 Scope and Purpose

This section sets forth:

2.1.1 The organization of the Quality Assurance Department.

2.1.2 The definition of the responsibilities and authorities associated with each job.

2.1.3 The relationship of each job to other jobs within the organization.

2.2 Organizational Responsibility

2.2.1 The Kenway Management Team is responsible for the establishment and maintenance of an adequate Quality Assurance Program.

2.2.2 Additional personnel outside of the Quality Assurance Department may be assigned to act in various quality control functions.

2.2.3 Where inspection is done by non-Quality Assurance personnel, audits of the effectiveness of their work will be periodically performed by Quality Assurance.

2.3 Organizational Functions

2.3.1 The total quality function encompasses many activities and personnel, but it is the function of Quality Assurance personnel to ensure conformance to specifications. These functions include:

(a) design review of applicable drawings
(b) inspection of incoming raw materials and components
(c) providing control at various stages of processing and fabricating
(d) determining product release or rejection

2.3.2 Quality Assurance Management will analyze rejection decisions. It may finalize the decision or make changes under permitted repair procedures.

2.4 Organization Chart (copy attached)

SECTION 3.0 DOCUMENTATION

3.1 Scope and Purpose

3.1.1 This section establishes the minimum documentation required for quality assurance during fabrication of FRP equipment.

3.1.2 Adequate and meticulous documentation is the foundation of a good Quality Assurance Program.

3.2 Minimum Documentation

3.2.1 Minimum documentation for each job shall include:

a) Work Order, including material specifications, fabrication procedures, operating conditions and design specifications
b) Purchase Order
c) Bill of Materials
d) Calculations (if required)
e) Approved Drawings
f) Job Review Meeting Sheet
g) Non-standard fabrication procedures
h) Inspection/quality documentation

3.2.2 Additional documentation as specified by the customer and/or project specifications.

3.3 Document Preparation Responsibility

The Project Manager/Engineer is responsible for preparing all required job documentation and distributing that information to the Production Director, Supervisors and the Quality Assurance Manager. The Production Director is responsible facilitating the Job Review Meeting with minimum participation of all parties referenced above.

SECTION 4.0 INSPECTION OF RECEIVED GOODS

4.1 Resin

The results of the following shall be recorded on the Resin Log Sheet, prior to use in fabrication. Material not in conformance shall be removed from circulation, properly labeled as non-conforming, and returned to the manufacturer.

4.1.1 The resin shall be checked to ensure it is the product ordered.

4.1.2 The resin shall have the proper label for the specified product, including the manufacturer's product name and Manufacturer's Specific Product Identification (MSPI).

4.1.3 The resin shall be visually checked to be of typical color and clarity for the specific resin, free from solid or gelled particles.

4.1.4 The resin must be within the manufacturer's specified limits for specific gravity,

viscosity, and room temperature gel time as determined by industry standard test methods.

4.1.5 Material certification and/or Certificates of Compliance where applicable shall be checked against the MSPI (if required by customer)

4.1.6 The storage environment of the resin must be in compliance with the manufacturer's recommendations.

4.2 Reinforcements

The results of the following shall be verified prior to use in fabrication. Material not in conformance shall be removed from circulation, properly labeled as non-conforming, and returned to the manufacturer.

4.2.1 The reinforcement shall be checked to ensure it is the product ordered.

4.2.2 The reinforcement shall have the proper label, including the manufacturer's product name and the MSPI.

4.2.3 The reinforcement package shall be checked for damage.

4.2.4 Material certification and/or Certificates of Compliance where applicable shall be checked against the MSPI (if required by customer).

4.2.5 The storage environment of reinforcements must be in compliance with the manufacturer's recommendations.

4.3 Curing Agents

The results of the following shall be verified prior to use in fabrication. Material not in conformance shall be removed from circulation, properly labeled as non-conforming, and returned to the manufacturer.

4.3.1 Curing agents shall be checked to assure they are the products ordered.

4.3.2 Curing agents shall have the proper label for the specified product, including the manufacturer's name and the MSPI.

4.3.3 Curing agents shall be visually checked to assure there is no stratification of the material in two or more phases. In the case of liquids, they shall be free of sediment or solid particles.

4.3.4 Curing activity of the curing agent shall be checked using industry standard methods.

4.3.5 The storage environment of curing agents must be in compliance with the manufacturer's recommendations.

4.4 Purchased and/or Sub-vended Items

The results of the following shall be verified prior to use in fabrication. Material not in conformance shall be removed from circulation, properly labeled as non-conforming, and returned to the manufacturer.

4.4.1 The item(s) must be checked to assure that it is the product ordered.

4.4.2 The item(s) must be inspected for damage.

4.4.3 The item(s) must be in compliance with the applicable drawings, specifications, and test methods that are part of the Fabricator/Subvendor/User agreement.

4.4.4 The item(s) shall be properly stored to insure integrity.

4.5 Common Additives

The results of the following shall be verified prior to use in fabrication. Material not in conformance shall be removed from circulation, properly labeled as non-conforming, and returned to the manufacturer.

4.5.1 Additives must be checked to assure that they are the product ordered.

4.5.2 Additives shall have the proper label for the specified product, including the manufacturer's product name and the MSPI.

4.5.3 Additive packaging must be checked for damage.

4.5.4 Additives must be stored in an environment that complies with the manufacturer's recommendations.

SECTION 5.0 IN-PROCESS INSPECTION

5.1 Resin Mixing

The following data shall be recorded on the Resin Log Sheet.

5.1.1 All resin mixing and primary preparation shall be done in one location under

controlled conditions.

5.1.2 Formulas which have been predetermined for each particular type of resin must be kept in a log book containing completed Mixing Data Sheets.

5.1.3 Mixing Data Sheets are also filled out for each batch and kept in a separate log with reference to the particular job number(s) (if required by customer)

5.2 Material Dispersement

5.2.1 Resin must be dispersed in containers that are clearly marked identifying their contents. In-process inspection must verify that the resin matches that specified on the Job Tag.

5.2.2 Reinforcements must be visually inspected, as they are dispersed, for imperfections such as holes, cuts, thin spots, and separations and contaminants such as dirt, oil, grease, and foreign objects under adequate overhead lighting.

5.3 Component Fabrication

The following data must be reported on the component Job Tag, prior to assembly.

5.3.1 As components are fabricated, the materials used must be verified.

5.3.2 The lamination sequence of a particular component must be recorded and verified to be correct.

5.3.3 On machine-made components, pertinent machine settings must be recorded.

5.3.4 Curing agent system and amount utilized for each component must be recorded (if outside standard parameters).

5.3.5 Barcol readings of fabricated components must be taken and recorded.

5.4 Assembly

The following data must be recorded on the Inspection Checklist. The Quality Assurance Manager is responsible for developing this checklist per each job so that it appropriately documents the conformance/non-conformance of the various components and the finished product. This checklist will be reviewed with the Project Manager/Engineer prior to use.

5.4.1 Throughout the assembly procedure, proper sequences, materials, and dimensions must be verified.

SECTION 6.0 FINISHED EQUIPMENT INSPECTION

The following data must be recorded on the Inspection Checklist.

6.1 Resin Cure

6.1.1 Surface hardness shall be checked in accordance with ASTM D 2583. Random readings must be taken on all parts and overlays. Certain corrosion barriers and cure systems may result in lower than typical hardness. If this is anticipated, an adjusted Barcol hardness value must be established with the User prior to fabrication.

6.1.2 All surfaces including overlays must pass an acetone sensitivity test. This is done by rubbing several drops of acetone on a small area and allowing the acetone to evaporate. Tackiness indicates improper resin cure. Testing is performed on one random location per part unless Barcol test results are lower than required.

6.1.4 All repairs to correct a nonconformity must be made in accordance with ASME RTP-1 or as designed by a qualified composites engineer.

6.2 Dimensions and Laminate Thickness

6.2.1 Thicknesses of all components and overlays shall be verified. Thickness can be checked by measuring actual cutouts, where possible, employing an ultrasonic or magnetic gage, or with calipers.

6.2.2 All dimensions and locations must be checked against the equipment drawing and recorded.

6.2.3 All repairs to correct a nonconformity must be made in accordance with ASME RTP-1 or as designed by a qualified composites engineer.

6.3 Visual Imperfections

6.3.1 The entire fabrication shall be checked for visual imperfections as described in Table 6-1 of ASME RTP-1, ASTM 2563, or customer specification. The equipment must comply with the Visual Inspection Level that has been specified.

6.3.2 All repairs to correct an imperfection must be made in accordance with Appendix M-7 of ASME RTP-1 or as designed by a qualified composites engineer.

6.4 Physical Property Tests

Physical Property Tests shall be conducted when required by the customer or if other circumstances suggesting such testing is advisable.

6.4.1 Reinforcement to resin ratio is established through loss by ignition testing in accordance with ASTM D 2584. Components shall be tested if a cutout or trim area is available and required by customer specification or if determined to be necessary by the Project Manager, Production Director or Supervisor, and/or the Quality Assurance Manager.

6.4.2 Laminate proof tests on a cutout or end sample from the shell shall be done in accordance with ASTM D 638 if required by customer specification or if determined to be necessary by the Project Manager, Production Director or Supervisor, and/or the Quality Assurance Manager. Values obtained must be equal to or greater than those specified and used in design calculations

6.5 Equipment Pressure Tests

6.5.1 See para. 6-950 of ASME RTP-1 for requirements on pressure tests.

6.5.2 It is company safety policy that Kenway Corporation's a Compressed Air Permit be secured prior to testing; and that:

a) a relief valve set at 2 psig to 3 psig above the maximum test pressure be installed at the top of all vessels to be hydro-tested under positive pressure;
b) prior to applying pressure, all air must be displaced by water on vessels to receive a hydro test at a positive pressure;
c) all vacuum tests must be conducted outside behind ample safety barriers;
d) the Director of Quality Assurance must review and approve all test setups for safety prior to applying pressure or vacuum.

SECTION 7.0 RECORD RETENTION AND CONTROLS

7.1 Scope

7.1.1 This procedure shall ensure that the records retained are complete and reliable.

7.1.2 Inspection and testing records shall, as a minimum, indicate the nature and number of observations made, and the number and type of nonconformities found.

7.1.3 Records shall be available for review as one of the principal forms of objective evidence of the Quality Assurance Program

7.2 Application and Retention

7.2.1 In general, records must be retained by the Quality Control Department.

7.2.2 These records shall be used basically to verify product conformance. They shall indicate the acceptability of work or products and the action taken in connection with nonconformities.

7.3 Record Retention

The Quality Assurance Department shall maintain inspection and test records of complete assembled units or subassemblies. These records shall be stored and maintained as specified by contractual requirements and/or as designated by the project manager.

7.4 Procedure for Record Handling

7.4.1 Records shall be filed primarily according to Work Order number.

7.4.2 For incoming inspection, records shall be subdivided according to part number or alphabetically according to the name of the supplier.

7.4.3 Serialized items for shipment to a customer shall be filed sequentially. A separate file will be maintained to show dates of shipments of individual items or groups of serialized items.

7.4.4 Records of shipped items shall show part name, part number, and serial number of the product. This shall be followed by a record of inspections, tests, etc., that will verify that the product conformed to specification at time of shipment.

7.4.5 Records shall form a basis of analysis and management action regarding the Quality Assurance Program.

KENWAY CORPORATION
ORGANIZATIONAL CHART

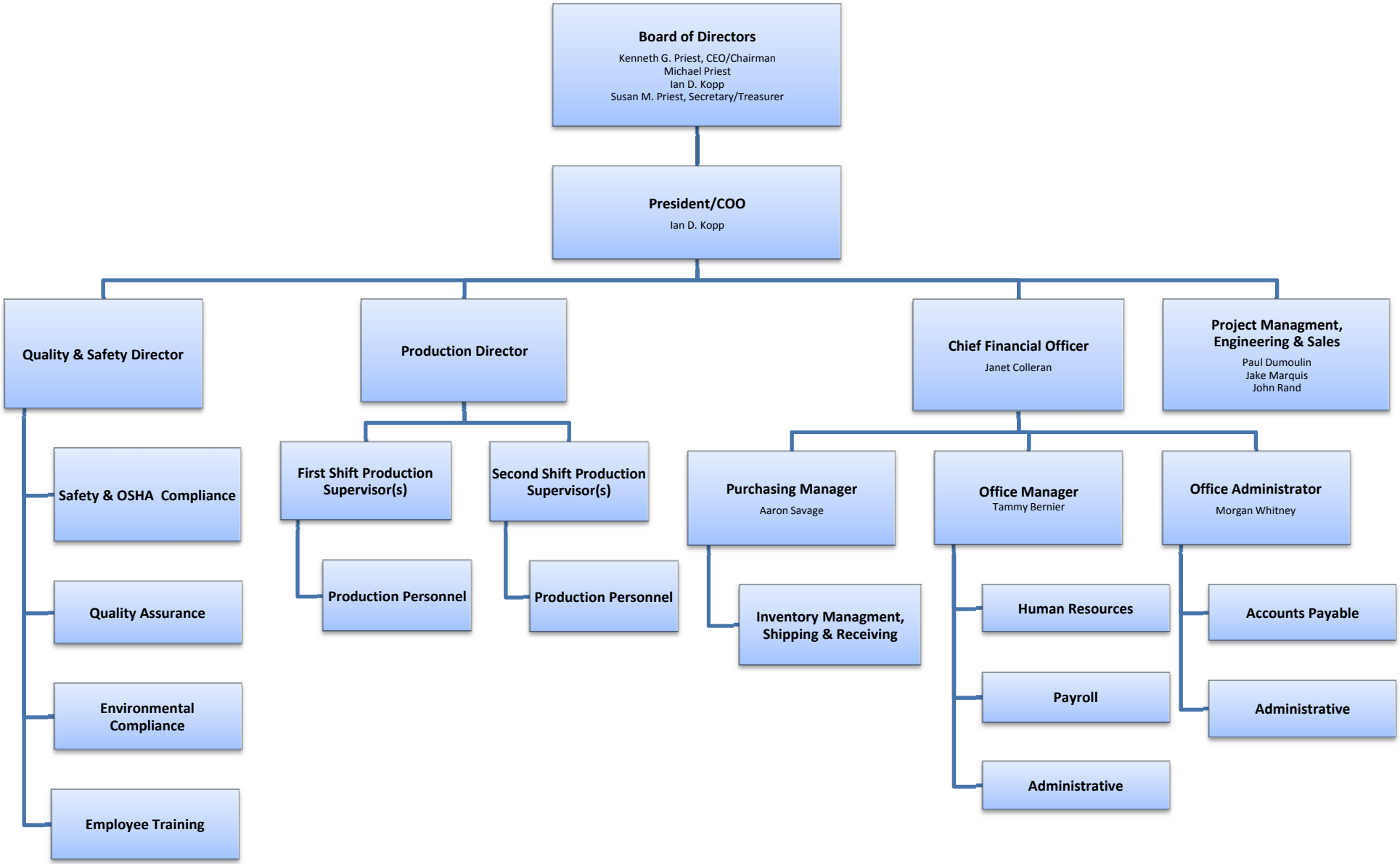

Vacuum Infusion Checklist - Fabrication

PART

Part #: _____ Work Order#: 8420 Date: _____

MOLD

Mold Prep By: _____ Date: _____ Inspected By: _____

Cleaner: _____ Sealer: _____ Release: _____

LAMINATE

Stacked By: _____ Date: _____ Inspected By: _____

Vac/Feed By: _____ Date: _____ Inspected By: _____

Bagged By: _____ Date: _____ Inspected By: _____

Fabric Lot #: _____ Description: PPG C33 C-veil

_____ Description: Vectorply 4008

_____ Description: TEAM 54

Core Lot #: _____ Description: _____

DROP TEST

Drop Test By: _____ Date: _____ Requirement: 1" Hg in 5 min

Drop Test Start: ____ / ____ (in. Hg) (Time) Drop Test End: ____ / ____ (in. Hg) (Time) → Result: _____

Mold Temp.: _____ Resin Temp.: _____ Inspected By: _____

RESIN

Resin Prep By: _____ Date: _____ Inspected By: _____

Resin: 8100-50GY Catalyst: MEKP 925 Cat. (phr): _____

# of Pounds: _____ # of Strokes: _____ (High Flow Pump) Cat. (cc/lb): _____ (See Conv. Chart)

Resin Lot #: _____ Catalyst Lot #: _____

Batch#	Catalyst Time	Feed Opened	Part Filled	Gel Time	Part Clamped
1					
2					
3					

QA Inspec. By: _____ Date: _____ Reject/Accept: _____ (R or A)

See opposite side for inspcetion categories and a description of repair work if required.

Notes:

Vacuum Infusion Checklist - Inspection

STANDARD

ASTM D 2563 Acceptance Level II

DEFECTS

- ☐ Resin starved area or dry fiber
- ☐ Resin rich area or missing fiber
- ☐ Delamnination or disbond
- ☐ Entrapped air, void, or blister
- ☐ Surface pit or crater
- ☐ Tacky surface or uncured resin
- ☐ Inclusions or debris on laminate
- ☐ Length not within tolerance
- ☐ Width not within tolerance
- ☐ Thickness not within tolerance
- ☐ Barcol below specified value
- ☐ Improper materials or layup
- ☐ Improper size or location of holes
- ☐ Other

REPAIRS

Is the part repairable per customer specifications? ☐ YES ☐ NO

If yes, describe the nature of the repairs to be completed in the space below.

Repaired By: _____ Date: _____ Reject/Accept: _____ (R or A)

Final Inspec. By: _____ Date: _____

Describe any additional repairs to be completed if necessary.

Repaired By: _____ Date: _____ Reject/Accept: _____ (R or A)

Final Inspec. By: _____ Date: _____

Quality Assurance Inspection Form: Assembly

WO#: 8420 **PART#:**

PROJECT NAME: Brookfield Floating Bridge Pontoons

PART DESCRIPTION:

INSPECTION STANDARD: 900.645 Special Provision (FRP Pontoons)

STRUCTURAL QUALITY LEVEL: See 900.645 and Dwg: 8420-8

	DATA	TECH INITIALS	QA INITIALS	NOTE
COMPONENT ASSEMBLY				
Jig/Layout Inspection (P/F)				
Component Set-up Inspection (P/F)				
Dry Fit of Bonded Components (P/F)				
Adhesive Gun Functionality & Material Quan. (P/F)				
Adequate Adhesive Squeeze Out (P/F)				
Nominal Bond Line Thickness (in.)				
Final Coat Quality (if applicable) (P/F)				
Dimensions Match Drawing Specifications (P/F)				

1) All spaces must be completed with exception of "NOTE". If no entry is required, then enter "N/A".

2) Reference attached Quality Assurance Drawing for verification of dimensions and tolerances.

3) Write a number in the "NOTE" column that matches the number of any applicable comments written in the notes section below.

INSPECTION NOTES:

KENWAY CORPORATION
INFUSION JOB TAG

WORK ORDER: 8420 **PART:** 1 - 1

CUSTOMER: Miller Construction **DRAWING:** 8420-6

PART DESCRIPTION: End Hull **DIMEN.:** 11'-6" x 51'-5"

Proj. Engineer: Jake Marquis **Supervisor:** Greg Wilcox

INFUSION RESIN: 8100-50GY **CATALYST:** 1.5% 925

EXTERIOR RESIN: n/a **CATALYST:** n/a

LAY-UP SCHEDULE: C-33 / 4008 / (7) 54 / 4008 or as noted on drawing

TASK (insert lines as required)	BUDGET MINUTES	ACTUAL MINUTES	INITIALS / DATE	QUALITY INSPECTION
CUT KITS	720			
MOLD PREP, TAPE TEST & SETUP	420			
LAY UP PART PER DRAWING	1380			
COVER PART W/PERF RELEASE FILM	240			
COVER 1" ON PART & PERIM. VAC W/PEEL PLY	210			
PLACE SHADE CLOTH OVER PART	240			
PREPARE AND INSTALL FEED LINES	480			
VERIFY INFUSION SETUP	60			
COVER PART WITH VAC BAG[1]	540			
DRAW DOWN VAC BAG & DROP TEST	120			
PREPARE RESIN FOR PROPER GEL TIME[2]	60			
INFUSE[3] (BURP FEED LINE)	420			
RELEASE, AND WEIGH PART	180			
MACHINING	90			
INSPECT	90			
TOTAL	**5250**	**87.5 hr**	**WEIGHT (LB)**	
			BARCOL	

Notes:

1) Use proper size and location of pleats in vacuum bag

2) Resin, fabric, and table shall be at a minimum of 75°F

3) Resin surface in bucket should be within +0" to -12" of mold surface

KENWAY CORPORATION
INFUSION JOB TAG

Check box after each layer is complete

Standard Layup:

(mold surface)	☐	C-veil
	☐	4008
	☐	54
	☐	54
	☐	54
	☐	54
	☐	54
	☐	54
	☐	54
	☐	4008

Thickened Area:

☐	4008
☐	54
☐	54
☐	54
☐	54
☐	54
☐	54
☐	54
☐	4008

Urethane Foam QA Check Sheet

Tested By	Date / Time	Gun #	Foam Type	Volume	Weight	Density	Visual	Chem Temp (F)	Air Temp (F)	Substrate Temp (F)	Tack Time (sec)

Urethane Foam QA Check Sheet

Sample Calculations

Standard 1 gal plastic pail		
Ave. diameter (in.)	7.000	
Height (in.)	7.125	
Volume (in.^{3})	274.2	
Volume (ft^3)	0.159	$\boxed{274.2in^3 \times \frac{1ft^3}{12^3 in^3}}$
Wt. of pail & foam (lb)	*0.770*	(example)
Wt. of pail only (lb)	0.460	
Wt. of foam only (lb)	0.310	$\boxed{= 0.770lb - 0.460lb}$
Density of foam (pcf)	1.95	$\boxed{= \frac{0.310lb}{0.159\,ft^3}}$

Standard 5 gal plastic pail		
Ave. diameter (in.)	10.563	
Height (in.)	13.500	
Volume (in.^{3})	1182.9	
Volume (ft^3)	0.685	$\boxed{1182.9in^3 \times \frac{1ft^3}{12^3 in^3}}$
Wt. of pail & foam (lb)	*2.860*	(example)
Wt. of pail only (lb)	1.480	
Wt. of foam only (lb)	1.380	$\boxed{= 2.860 - 1.480}$
Density of foam (pcf)	2.02	$\boxed{= \frac{1.380lb}{0.685\,ft^3}}$

** Test shots shall be performed each time the equipment is brought online and no more than every 4 hr during prolonged installations. **

** If output is not in range, follow "How to Compute a Ratio" procedure in the foam gun manual to verify proper A and B side ratio. **

HOW TO COMPUTE A RATIO

Ratio: The weight comparison of the "A" component output to the "B" component output.

Items required:

1. Plastic bags or 165 oz. cups with liners
2. Timer, stopwatch, or watch with second hand
3. Good quality scale (gram scale is best)
4. Calculator

Procedure for Ratio Check:

1. Remove mix chamber
2. Close both inline ball valves and shoot at least one second of foam into a plastic bag. This will de-pressurize the flow controllers. Air purge the gun.
3. Take a timed shot of "A" component into a bag or cup. Air purge the gun and weigh your test shot. Record the weight of "A" less any tare weight of receptacle. Note: To take a shot of "A" only you must shut off the "B" inline ball valve.
4. Close both inline ball valves and shoot at least one second of foam into a plastic bag. This will de-pressurize the flow controllers. Air purge the gun.
5. Take a timed shot of "B" component only into a bag or cup. Air purge gun and weigh your test shot. Record the weight of "B" less any tare weight of receptacle.
   Note: To take a shot of "B" only, you must shut off the "A" inline ball valve.

Sample Shot Times for "A" & "B" Components

Gun size	Time	"A" Wt	"B" Wt
7# / min	5 sec.	.29 # (132.5 gr.)	.29# (132.5 gr.)
17 # / min	5 sec.	.70 # (317.8 gr.)	.70 # (317.8 gr.)
36 # / min	5 sec.	1.5 # (681 gr.)	1.5 # (681 gr.)
45 # / min	5 sec.	2.25 # (1021.5 gr.)	2.25 # (1021.5 gr.)
60 # / min	5 sec.	3 # (1362 gr.)	3 # (1362 gr.)

Calculation:

Divide the weight of "B" component by the weight of "A" component. Express ratio in units of 100, with "A" component as 100%.

Example: "A" = 681 grams and "B" = 665 grams
665 / 681 = .976 or a ratio of = 100 (A) to 97.6 (B)

Preferred Foam Products / Tel. 860-669-3626 Fax 860-664-4919

DATA LOG SHEET

Date	Ambient Temp.	Temp. A	Temp. B	Shot Time	Gel Time (sec.)	Tack Free (sec.)	Bag Shot Weight	Weight A	Weight B	Ratio A	Ratio B
Equipment						**Chemicals**					

Comments and information

MMA QA Check Sheet

Tested By	Date / Time	Gun #	MMA Type	Wt. A (lb)	Wt. B (lb)	Ratio A	Ratio B	Chem Temp (F)	Air Temp (F)	Gel Time (min)

T9008-B4-MAN-010

0910-LP-537-5800

INSPECTION AND REPAIR MANUAL FOR

FIBER REINFORCED PLASTIC BOATS AND CRAFT

DISTRIBUTION STATEMENT A: APPROVED FOR PUBLIC RELEASE; DISTRIBUTION IS UNLIMITED.

PUBLISHED BY DIRECTION OF COMMANDER, NAVAL SEA SYSTEMS COMMAND

FOR OFFICIAL USE ONLY

0910-LP-537-5800

15 APRIL 1992

INSPECTION AND REPAIR MANUAL
FOR
FIBER REINFORCED PLASTIC BOATS AND CRAFT

TABLE OF CONTENTS

Title **Chapter**

INTRODUCTION

INTRODUCTION TO REINFORCED PLASTICS 1

HEALTH AND SAFETY 2

THE LAMINATING PROCESS 3

INSPECTION 4

TESTING 5

FRP REPAIR METHODS 6

RELATED PROCESSES 7

GLOSSARY 8

CHAPTER 6

FRP REPAIR METHODS

CHAPTER 6: FRP REPAIR METHODS

TABLE OF CONTENTS

Section: Page:

1.0 INTRODUCTION 6-1
1.1 Warnings
1.2 Cautions

2.0 BASIC PROCEDURES 6-3
2.1 Laminate Inspection
2.2 Procedure for Mixing Filled Resin
2.3 Procedure for Cutting Reinforcement Materials to Size
2.4 Procedure for Mixing Resin or Gel Coat
2.5 Procedure for Finishing Repairs to Molded Surfaces

3.0 SURFACE CRACKS, CRAZING AND ABRASION 6-7

4.0 DAMAGE TO ONE SIDE OF A LAMINATE 6-9

5.0 DAMAGE THROUGH A LAMINATE 6-11
5.1 Damage Through a Single Skin Laminate With Access From One Side
5.2 Damage Through a Single Skin Laminate With Access From Both Sides
5.3 Damage Though One Skin of a Cored Laminate
5.4 Damage Though a Cored Laminate With Access From One Side
5.5 Damage Through a Cored Laminate With Access From Both Sides

6.0 DELAMINATION 6-24

7.0 CORE DEBOND REPAIR 6-24

8.0 REPAIRS IN WAY OF MECHANICAL CONNECTIONS 6-26

9.0 REPAIR OF TUBULAR STRUCTURES 6-28

10.0 REPAIR OF BLISTERS 6-29

11.0 REPAIR OF PIGMENTED GEL COAT 6-30

12.0 FABRICATION OF BACKING PLATES AND MOLDS 6-32

13.0 REPAIRS WITH NON-GLASS REINFORCEMENTS.. 6-34
13.1 Kevlar
13.2 Carbon Fiber

CHAPTER 6: FRP REPAIR METHODS

LIST OF FIGURES

Title: Figure:

Template for Cutting Reinforcement 6.1

Effect of Oversize and Undersize Repair Laminate Reinforcement 6.2

Typical Doublers 6.3

Surface Cracks and Crazing 6.4

Surface Abrasion Damage 6.5

Repair of Damage to One Side of a Laminate 6.6

Laminating a Repair on Buoyancy Foam 6.7

Backing Plate for Repairs With Access From One Side 6.8

Methods of Temporarily Securing Backing Plates 6.9

Repair of Single Skin Laminate With Access From One Side 6.10

Repair of Single Skin Laminate With Access From Both Sides 6.11

Repair of Damage Through One Skin of a Cored Laminate 6.12

Repair of Damage Through a Cored Laminate With Access From One Side 6.13

Repair of Damage Through a Cored Laminate With Access From Both Sides 6.14

Edge and Bubble Delamination 6.15

Bonding Angle And Stiffener Delamination 6.16

Core Debond Repair 6.17

Repair of Blisters 6.18

Fabrication of Backing Plates and Molds for Repairs 6.19

1.0 INTRODUCTION

This chapter provides step-by-step instructions for the repair of damaged fiber reinforced plastic boats. The user should become familiar with the other chapters in this manual prior to attempting repairs in order to understand the purpose of the procedures discussed in this chapter. Chapter 2, Health and Safety, should be read by anyone exposed to FRP fabrication materials to develop an understanding of the hazards of the materials and the appropriate procedures and equipment to be used to reduce the hazards.

The repair methods described in this chapter cover basic procedures for repairing several common types of damage to different types of laminate. Actual repairs may involve complications including difficult access, combined types of damage within a repair area, damage affecting more than one type of laminate and other factors. Repair, more than new construction, requires that the laminator apply creativity to the process while carefully following the basic principles of FRP fabrication to produce repairs with a good bond, structural continuity, appropriate reinforcement of the repair, and to maintain the function of the repaired part.

Repairs may consist of temporary field repairs or depot-level permanent repairs. Temporary repairs are generally made using the Navy standard repair kit, following the directions included in the kit. Temporary repairs are intended to keep the damaged craft in service for a limited time, and are usually replaced when the craft is available for depot-level maintenance. It is recognized that rigorous adherence to the repair procedures detailed in this manual may not be possible under all circumstances of temporary or emergency repair.

There are several basic principles to be observed in making permanent repairs to fiber reinforced plastics:

1. The environment in which the repair is conducted must be warm (preferably 60˚ to 90˚F) and protected from direct sunlight, rain, mist, spray and excessive dust or other contamination.

2. The surface to be repaired must be clean and dry.

3. The surface must be prepared to properly bond to the repair materials.

4. The materials used in the original construction of the craft must be identified and appropriate repair materials selected.

5. If the repair involves a hole through the laminate, some means of making the shape of the repair conform to the original surface contours must be used.

6. On molded surfaces, the surface of the repair must be made smooth and faired into the adjacent laminate by grinding, or by laminating the repair using a temporary mold. The surface of the repair and adjacent laminate must be resealed with surfacing resin or gel coat prior to painting.

Repair problems may encountered which cannot be solved using the procedures described in this manual, required repair materials may be difficult to locate, or the Boat Information Book and as-built drawings may

not available, If these or other repair problems are encountered, contact the NAVSEASYSCOM Life Cycle Manager for Boats and Craft for assistance.

1.1 Warnings

The following warnings apply to the procedures described in this chapter:

WARNING

THE REPAIR PROCEDURES DESCRIBED HEREIN INVOLVE HAZARDOUS OPERATIONS AND MATERIALS. BEFORE PROCEEDING WITH REPAIRS, READ AND UNDERSTAND CHAPTER 2 (HEALTH AND SAFETY) OF THIS MANUAL, THE SAFETY PROCEDURES IN EQUIPMENT OPERATING MANUALS, AND MATERIAL SAFETY DATA SHEETS APPLICABLE TO THE MATERIALS BEING USED. WEAR THE PERSONAL PROTECTIVE EQUIPMENT RECOMMENDED BY THE MATERIAL SAFETY DATA SHEET. IF YOU DO NOT UNDERSTAND A RECOMMENDED OR REQUIRED SAFETY PROCEDURE OR THE USE OF SAFETY EQUIPMENT, CONSULT YOUR SUPERVISOR.

1.2 Cautions

The following cautions apply to the repair operations described in this chapter:

CAUTION

DO NOT USE COMPRESSED AIR FROM THE REGULAR TOOL SERVICE LINES TO DRY OR DUST OFF THE WORK AREA. COMPRESSED AIR MAY DEPOSIT OIL, MOISTURE AND CONTAMINANTS ON THE LAMINATE SURFACE, PREVENTING PROPER ADHESION OF THE REPAIR MATERIALS.

CAUTION

DO NOT ATTEMPT TO REPAIR LAMINATE WHICH IS WET OR OIL SOAKED. REPAIR MATERIALS WILL NOT PROPERLY ADHERE TO SUCH SURFACES. THE AFFECTED LAMINATE MUST BE CLEANED AND DRIED BEFORE REPAIRING. IF AN AREA OF LAMINATE CANNOT BE MADE OIL-FREE AND DRY, IT MUST BE CUT AWAY TO EXPOSE REPAIRABLE LAMINATE.

CAUTION

DO NOT ATTEMPT TO APPLY LAMINATE OVER WET BUOYANCY FOAM. RESINS USED IN REPAIR WILL NOT CURE PROPERLY IN THE PRESENCE OF MOISTURE. REMOVE WET BUOYANCY FOAM BEFORE REPAIRING THE LAMINATE.

2.0 BASIC PROCEDURES

The following procedures are common to many repair operations, and should be read and understood before proceeding with repairs.

2.1 Laminate Inspection

Before beginning repair, the laminate must be inspected to determine the type and extent of damage. Preliminary inspections are generally visual, looking for cracks or crazing, unfair areas or blisters, evidence of water weeping from the laminate, or other evidence of laminate damage. Other methods of inspecting craft laminates include tapping the laminate with a small hammer (1 or 2 ounce jeweler's hammer or similar object), ultrasonic thickness gauges and moisture meters (particularly for blistered laminate; see section 10.0). Ultrasonic thickness gauges may be useful in locating delamination, but tapping the laminate will perform the same function, and is more useful in locating core delaminations, where ultrasonic thickness gauges are not effective. Other methods, such as x-ray inspection and ultrasonic scans are relatively expensive or suited only to laboratory use on test panels.

In general, tapping undamaged laminate will produce a sharp, solid sound, while tapping delaminated or cracked laminate will produce a dull or hollow sound. However, note that thin skin cored laminates (particularly where skin thickness is less than 3116) may produce a fairly hollow sound when tapped, even if undamaged. The most reliable results are obtained by tapping an area of laminate known to be undamaged, and comparing the sound to areas of laminate of unknown condition, being careful to note that areas where the laminate thickness has changed, or where bulkheads or framing contact the laminate, will affect the sound.

2.2 Procedure for Mixing Catalyst into Resin or Gel Coat

In these instructions for adding catalyst, references to resin include polyester or vinylester laminating resin, non air-inhibited resin or gel coat, as appropriate. Note that non air-inhibited resin and gel coat, which contain a wax additive, are to be used only where specified as a surface coating. If used or priming or laminating, the wax additive will interfere with bonding between plies of the repair.

This procedure is applicable to resin or gel coat applied using bucket and brush or hot pot spray methods. Note that prepromoted resin or gel coat must be used, or promoter must be added in accordance with the resin manufacturer's recommendations. Resin will not cure unless both catalyst and promoter are present in the proper concentration.

2.2.1 Assemble the following tools arid materials:

Mixing container (size as required)
Mixing equipment (tongue depressor, paint stirrer or Jiffy mixer and power drill)
Resin, prepromoted
Catalyst

2.2.2 Pour the amount of resin required for the repair into the mixing container. Do not catalyze more resin than can be used within the resin gel time recommended in the repair procedure. Consult the resin manufacturer's information to determine the amount of catalyst which results in the recommended gel time at the ambient temperature. If this information is not available, determine the amount of catalyst required by performing a gel time test as described in Chapter 5 of this manual.

2.2.3 Carefully add the proper amount of catalyst to the resin, stirring constantly. Be sure to scrape the sides of the container to thoroughly mix the resin and catalyst. Depending on the quantity of resin being mixed, use a tongue depressor, paint mixing stick, or power drill with a Jiffy mixer to perform the mixing operation. Stir carefully to avoid adding air bubbles to the mixture. Note that use of a tinted catalyst will provide a clear visual indication that the catalyst arid resin have been completely mixed (not applicable to pigmented gel coat).

2.3 **Procedure for Mixing Filled Resin**

Filled resin may be available in ready to use form from a distributor of FRP fabricating materials. Note that auto body filler or similar material is not an acceptable substitute for filled resin. If filled resin is not available, the instructions which follow should be used to prepare filled resin.

Note that prepromoted resin must be used to prepare filled resin, or promoter must be added to the resin in accordance with the resin manufacturer's recommendations. Resin will not cure unless both catalyst and promoter are present in the proper concentration.

2.3.1 Assemble the following tools and materials:

Mixing container (size as required)
Mixing equipment (tongue depressor, paint stirrer or Jiffy mixer and power drill)
Resin, prepromoted
Catalyst

2.3.2 Determine the amount of filled resin required. Filled resin may be mixed as required for each repair, or mixed in larger lots and used as required. Pour the required amount of resin into a mixing container. Slowly add milled fibers to the resin, stirring constantly. Be sure to scrape the sides of the container to thoroughly mix the resin and milled fibers. Depending on the quantity of resin being mixed, use a tongue depressor, paint mixing stick, or power drill with a Jiffy mixer to perform the mixing operation. Stir carefully to avoid adding air bubbles to the mixture, and to thoroughly mix the milled fibers into the resin. Continue to add milled fibers and stir the mixture until the mixture reaches a soft, adhesive consistency, similar to that of mayonnaise.

2.3.3 Consult the resin manufacturer's information to determine the amount of catalyst which results in the recommended gel time at the ambient temperature. If this information is not available, determine the amount of catalyst required by performing a gel time test with a sample of resin, as described in Chapter 5 of this manual. Generally, a 10 to 20 minute gel time is recommended for filled resin, although longer gel times may be used if required. Note that the gel time test may be performed on resin instead of filled resin. However, for a given concentration of catalyst, the gel time of the filled resin will be shorter than that of the unfilled resin.

2.3.4 Place a measured amount of filled resin in a mixing container. The amount of filled resin catalyzed should not be more than can be used within the gel time. Measure the amount of catalyst required for the selected gel time and add to the filled resin mixture. Depending on the quantity of filled resin mixed, use a tongue depressor, paint mixing stick or power drill with a Jiffy mixer to stir the mixture. Mix the filled resin and catalyst thoroughly, making sure to scrape the sides of the container frequently to ensure that all of the filled resin is catalyzed.

2.4 **Procedure for Cutting Reinforcement Materials to Size**

The following procedure is recommended for cutting fabric repair materials such as woven roving, mat and biaxial reinforcement to ensure that the materials accurately fit the scarfed repair and that the required number of plies of material are prepared. Note that repairs to large areas may be made by making a mold from a sister craft as described in section 12.0, using the mold to fabricate a laminated repair part, and bonding it in place using the methods described in section 5.2 or 5.5.

2.4.1 Place a piece of kraft paper over the scarfed area. Make sure that the kraft paper covers the entire damaged area, including the outer edges of the scarf, so that the reinforcement template will accurately reflect the size of materials needed for the repair. Trace the outline of the scarfed area onto the paper. This tracing will serve as a template for cutting the reinforcement material (see figure 6.1).

2.42 Consult the Boat Information Book and craft as-built drawings to determine the number of plies of reinforcement and the type of reinforcement required for each ply of the repair.

The total thickness of material required to fill the repair area can be checked using Table 6.1 to determine the thickness and required number of plies of each material. In general, the ply of material on the outer, molded surface of the original laminate and the first ply applied to a core will be mat. The remaining plies of reinforcement will be cut from the reinforcing material specified by the Boat Information Book or the craft as-built drawings. Trace the shape of the required plies on the kraft paper, measuring in from the edge of the template to evenly reduce the size of each ply from the largest to the smallest. Consult Table 6.1 for recommendations on the amount successive ply sizes should be reduced for a 12:1 repair scarf. Figure 6.1 depicts a typical paper template for a laminate repair.

2.4.3 The repair materials must be carefully cut to she for a proper fit in the repair area. If the reinforcement is oversized, grinding may be necessary to restore the proper contours of the laminate surface. However, if the reinforcement is undersized, the repair will be weakened. It is better to cut the reinforcement slightly oversize than undersize (see figure 6.2).

Cut the reinforcement material with a sharp pair of shears. Start with the largest ply first, then trim the template to the next ply, cut that ply, and continue to the smallest ply. While handling and cutting the reinforcement, take care to keep the reinforcement clean and free of oils or other contaminants.

2.4.4 Additional plies should be cut to form a doubler on the inner or non-molded surface of the laminate, where this surface is accessible. A doubler consists of plies of reinforcement which overlap the joint between the repair patch and the original laminate to reinforce the joint. The thickness of the doubler should be approximately 1/2 that of the original laminate. The first ply of the doubler should overlap the joint by 2", with each successive ply having an additional 1" of overlap (see figure 6.3). In large repairs, the doubler need not extend over the entire surface of the repair patch, but may consist of strips of reinforcement which overlap the joint. The first strip of reinforcing material should be 4" wide, to overlap the joint by 2" on each side, with each successive strip being 2" wider to overlap the joint an additional 1" on each side. Figure 6.2 depicts typical doublers.

TABLE 6.1 REINFORCING MATERIAL CHARACTERISTICS

Reinforcement Type	Unit Weight	Thickness per ply	Reduction in size per ply for 12:1 scarf (Measure in all around)
24 ounce WR	24 ounces per sq yd	.038”	.46”
18 ounce biaxial	18 ounces per sq yd	. 029"	.34"
10 ounce cloth	10 ounces per sq yd	.016”	.19”
11.5 ounce mat	1.5 ounces per sq ft	.04”	.48”
1 ounce mat	1 ounce per sq ft	.027”	.32”

2.5 Procedure for Finishing Repairs to Molded Surfaces

Molded surfaces of laminates, such as the exterior of the hull or deck, must be finished with a smooth, paintable surface. This requires that the repair laminate be ground smooth and faired to blend with the adjacent original laminate. Following this, the repair area is coated with non air-inhibited resin or gel coat to seal the laminate prior to painting. Paint must not be applied to laminate having exposed surface fibers, since resin or gel coat is required to seal the laminate fibers against water absorption.

If the original surface was finished with pigmented gel coat, repairs should be refinished with pigmented gel coat as described in section 11.0 of this chapter.

2.5.1 Assemble the following tools and materials: Mixing container (size as required) Mixing equipment (tongue depressor, paint mixing stick or Jiffy mixer) Non air-inhibited resin or gel coat, prepromoted Catalyst Disposable paint brush, 1-1/2" to 3" (recommend spray equipment for large areas) Wet film thickness gauge 120 grit wet-or-dry sandpaper Rubber sanding block

2.5.2 When the repair laminate has cured, remove the peel ply (if used) and carefully grind the surface of the repair, using the 60 grit disk, to be smooth and faired into the adjacent original laminate. Inspect the surface of the repair and fill surface pits with filled resin as described in section 3.0. Sand the surface smooth with 120 grit wet sandpaper to prepare for coating with non air-inhibited resin or gel coat.

2.5.3 Coat the surface of the repair area with non aft-inhibited resin or gel coat prepared using the instructions in section 2.1. A brush may be used for small areas, but gel coat spray equipment is recommended for large areas to help in applying a coating of even thickness. Use a wet film thickness gauge to verify that the resin or gel coat has been applied to a thickness of 20 to 30 mils.

2.5.4 After the resin or gel coat has cured, sand the surface smooth to provide a paintable surface. Be careful not to sand through the surface and expose mat or reinforcement fibers in the repair or adjacent laminate. If this occurs, the resin or gel coat must be reapplied to the affected area. Paint the repair area as required by the Boat Information Book.

3.0 SURFACE CRACKS, CRAZING AND ABRASION

Surface cracks, crazing and abrasion which do not extend below the first ply of mat are the most common types of damage to FRP craft. These types of damage may appear to be only cosmetic, but they provide a path for water to enter the laminate. Therefore, repairs should be performed promptly to avoid further damage to the laminate.

Typical cracks and abrasions are illustrated in figures 6.3 and 6.4. Minor damage to pigmented gel coat surfaces should be repaired using the instructions in section 11.0 of this chapter.

Repair surface cracks, abrasions and crazing that do not penetrate the surface layer of mat in accordance with the following procedure:

3.1 Assemble the following tools and equipment:

- Disk grinder
- Die grinder
- Rubber sanding block
- Putty knife (1-1/2" and 3")
- Jiffy mixer
- Power drill
- Respirator and persona] protective equipment

3.2 Assemble the following materials and supplies:

Chalk or permanent felt marker
60 grit grinding disks
120 grit wet-or-dry sandpaper
Kraft paper
Masking tape
Clean, dry, cotton rags
Filled resin, promoted
Catalyst
Release film
Wood tongue depressors
Clean paint mixing sticks
Containers for mixing resin
Rubber squeegee

3.3 Inspect the surface for damage and mark the area to be ground out.

3.4 Using a power disk grinder fitted with a 60 grit disk, grind away the paint in the damaged area. Grind away the cracked gel coat and mat until the damaged material has been removed. Clean dust from the area frequently, inspecting the surface carefully to be sure that the grinding progresses no deeper than necessary to remove the signs of damage. Taper the edges to a slope of approximately 12:1. If individual cracks are being repaired, die grinder may be used to grind out each crack. If the grinding operation penetrates through the first mat ply, repair the area using the instructions in section 4.0 of this chapter.

3.5 Remove any paint or coatings from the edges of the ground out area using the disk grinder with a 60 grit disk, being careful not to grind away the gel coat. Remove dust from the repair area with a clean cloth or brush using care not to touch the cleaned area with the hands. Oil from the hands may prevent the patch material from adhering to the laminate.

3.6 Mask around the area to be patched with kraft paper and masking tape to protect the adjacent laminate and paint. Following the instructions in section 2.3, mix enough filled resin to fill the repair area and allow for 20% waste. The recommended gel time for the repair is 10-20 minutes.

3.7 Carefully apply the filled resin to the damaged area using the squeegee or putty knife. Be sure to work out any entrapped air, leaving the filled area a little higher than the surrounding surface to allow for sanding and finishing.

3.8 The freshly applied filled resin may be covered with release film and the surface squeegeed smooth to release entrapped air and reduce the grinding necessary. Allow sufficient material to remain above the surface for surface sanding. Leave the release film in place until the material has cured.

3.9 After the filled resin has cured, peel off the release film and sand the surface flush with the surrounding original surface using the 120 grit wet-or-dry sandpaper and the sanding block, being careful not to sand through the gel coat in the adjacent laminate. If the gel coat in the adjacent laminate is sanded through, repair the surface using the instructions in section 2.5 of this chapter.

3.10 Inspect the patched area for porosity or voids and repair as necessary following the steps outlined above.

3.11 Apply primer and coatings in accordance with the painting instructions in the Boat Information Book.

4.0 DAMAGE TO ONE SIDE OF A LAMINATE

Impact loading or high stress may result in damage to one side of a laminate, but not extend through the laminate. Such damage may appear as an open fracture where the surface resin has chipped away exposing the glass plies, or as a fracture extending into the laminate but not penetrating the opposite side of the laminate. Either type of damage should be repaired promptly as stress concentration and weathering of the damaged area will cause further damage to the laminate.

A repair to one side of a laminate is depicted in figure 6.5.

4.1 Assemble the following tools and equipment:

- Disk grinder
- Power drill
- Jiffy mixer
- Rubber sanding block
- Putty knife (1-1121/2" and 3”)
- Shears
- Air bubble roller
- Respirator and persona] l protective equipment

4.2 Assemble the following materials and supplies:

- Chalk or permanent felt marker
- 24 grit grinding disks
- 60 grit grinding disks
- 120 grit wet-or-dry sandpaper
- Resin, promoted
- Gel coat, promoted
- Surfacing resin or non air-inhibited resin, promoted
- Catalyst
- Mat, weight as required
- Reinforcement materials, type and weight as required
- Masking tape
- Kraft paper
- Peel ply material
- Clean, dry cotton rags
- Containers for mixing resin
- Wood tongue depressors

Clean paint mixing sticks
Disposable paint brushes, 1-1/2" and 3"
Rubber squeegee

4.3 For the open fracture, the first step after surveying the damage is to clear away any loose pieces of laminate. This step will help to prevent glass fibers and resin fragments flying loose

during the grinding operation. Following this, the laminate is inspected visually and by tapping with the hammer to determine the extent of damaged laminate. Mark the area of damaged laminate to be removed.

4.4 Grind, away damaged laminate using a 24 grit disk. Work evenly around the damaged area to avoid creating sharp corners. Grind until solid laminate is reached, taking care not to break through the back of the laminate. Reinspect the laminate to ensure that all of the damaged laminate has been removed. If the damage is found to extend through the laminate, follow the procedures described in section 5.0 of this chapter.

4.5 After the damaged laminate has been removed, mark a scarf area surrounding the damage at a distance resulting in a scarf slope of 12:1. Grind from the damaged area back to the scarf line, using a 24 grit disk. Avoid creating unevenness, sharp edges or corners in the laminate while grinding as this will make lamination of the reinforcement more difficult and lower the strength of the repair.

4.6 Grind paint away from the edges of the scarf using a 60 grit disk, being careful not to grind away the gel coat. Clean the scarfed area with a clean, dry rag or brush to remove all dust and particles. Mask around the scarfed areas with kraft paper and masking tape, leaving several inches between the edge of the scarf and the tape.

4.7 Prepare the reinforcing materials for the repair in using the instructions in section 2.4 of this chapter. Organize the reinforcement within reach of the damaged area, stacked so that the first ply to be used is on top of the stack.

4.8 Following the instructions given in section 2.2, mix an amount of resin sufficient to saturate the reinforcement for the repair area and allow for 20% waste. The recommended gel time for this repair is 30-40 minutes.

4.9 Apply a coat of resin to the sanded area and place the first ply of reinforcing material onto the resin wetted surface. Using a brush or spray equipment, apply sufficient resin to thoroughly wet out the reinforcement and eliminating air pockets and dry spots. Work out any air bubbles using an air bubble roller. Apply succeeding plies, from smallest to largest, in a similar manner. Build up the patch until it is flush with the surrounding surface.

4.10 For repairs to the molded surface of a laminate, it is recommended that a layer of peel ply

be applied to help in faking the repair into the adjacent laminate and to minimize grinding. Roll or squeegee the laminate or peel ply to remove trapped air and excess resin and allow to cure.

4.11 After the patch has fully cured, remove the peel ply (if used) and inspect for voids and subsurface air bubbles. If large bubbles or voids are found they must be ground out and repaired.

4.12 If a molded laminate surface is being repaired, such as the outer surface of the hull or deck house, finish the surface of the repair using the instructions in section 2.5 of this chapter.

4.13 If the surface is an interior surface below the waterline, coat the surface with 10 to 20 mils of non air-inhibited resin. Using the instructions in section 2.2, mix enough non air-inhibited resin to cover the repair area and allow for 20% waste. The recommended gel time is 10-20 minutes.

5.0 DAMAGE THROUGH A LAMINATE

Damage that penetrates through the thickness of the laminate can result from punctures or from stress which results in cracks through the thickness of the laminate. Repair procedures will vary depending on the access to the damaged laminate and the extent of the damage. Repair procedures for different types of laminate, degrees of damage and laminate accessibility are described in sections 5.1 through 5.5.

Where access to a repair is limited to one side of the laminate, and the repair procedures of sections 5.1 or 5.4 do not permit satisfactory repair of the damaged area, it may be necessary to make both sides of the damaged area accessible. This may be accomplished by removing tanks, machinery or other obstructions, or by removing noncritical structures such as buoyancy foam seals, seats or other low stress structures. Critical structures such as longitudinal girders and flaming should only be removed if absolutely necessary in the case of major repairs, and the repair of these parts must be undertaken with great care to restore the strength of the craft. Structure in way of hoisting gear must not be removed or damaged during the repair of adjacent laminate.

Large repairs (larger than approximately 4 square feet in area) are best accomplished by fabricating a replacement section of laminate and bonding it into the prepared repair area. This requires access to both sides of the laminate to produce a repair with adequate strength. Section 12.0 of this chapter describes methods of fabricating a mold from a sister craft to produce a replacement section of laminate.

5.1 Damage Through a Single Skin Laminate With Access From One Side

This section discusses procedures for repairing a single skin laminate which is accessible from only one side. Examples of such damage include punctures or fractures through a single skin bull laminate in way of a space filled with buoyancy foam or a space that is otherwise inaccessible.

5.1.1 Assemble the following tools and equipment:

- Plastic faced hammer or jeweler’s hammer
- Disk grinder
- Power drill
- Jiffy mixer
- Reciprocating saw
- Rubber sanding block
- Shears
- Air bubble roller
- Respirator and personal protective equipment

5.1.2 Assemble the following materials and supplies:

Chalk or permanent felt marker
24 grit grinding disks
60 grit grinding disks
120 grit wet-or-dry sandpaper
Resin, promoted
Filled resin, promoted
Gel coat, promoted
Non air-inhibited resin, promoted
Catalyst
Mat, weight as required
Reinforcement materials, type and weight as required
Masking tape
Kraft paper
Release film
PVA mold release
Peel ply material
Clean, dry cotton rags
Containers for mixing resin
Wood tongue depressors
Clean paint mixing sticks
Disposable paint brush, 1-1/2" and 3"
Rubber squeegee

5.1.3 Inspect the damaged area visually and by tapping with the hammer to determine the extent of damaged laminate. The damaged areas should be clearly marked prior to cutting away any laminate.

5.1.4 Cut through the laminate with a reciprocating saw, following the marks outlining the damage. After cutting the laminate, reinspect the edges to make sure that all damaged or delaminated areas have been removed, extending the cut out area as required.

5.1.5 If there is wet or damaged buoyancy foam in way of the repair area, the damaged foam must be removed before grinding the scarf to avoid contaminating the scarf surface. Buoyancy foam replacement procedures are described in section 2.0 of chapter 7. The buoyancy foam may be replaced before repairing the laminate, and shaped to provide a form for laminating the repair (see figure 6.6). However, if the repair area is of complex shape, a mold should be made as described in section 12.0 and used to prepare a backing plate for the repair laminate as discussed in section 5.1.10. The buoyancy foam may be replaced after the backing plate is installed or after the laminate repair is complete.

5.1.6 After the damaged laminate has been removed, mark a scarf area surrounding the damage at a distance resulting in a scarf slope of 12:1. Grind from the damaged area back to the scarf line, using a 24 grit disk. Avoid creating unevenness, sharp edges or corners in the laminate while grinding as this will make the lay-up of the reinforcement more difficult and lower the strength of the repair.

5.1.7 Grind paint away from the edges of the scarf using a 60 grit disk, being careful not to grind away the gel coat. Clean the scarfed area with a clean, dry rag or brush to remove all dust and particles. Mask around the scarfed areas with kraft paper and masking tape, leaving several inches between the edge of the scarf and the tape.

5.1.8 Using the instructions in section 2.4, prepare the reinforcement needed for the laminate repair.

5.1.9 If the cut-out area is less than three square inches (about two inches in diameter) and is not in an area with complex shape, the repair patch can be applied without the need for a backing plate by using the following procedure:

Using the instructions in section 2.2, mix an amount of resin sufficient to saturate the reinforcement in the repair area and allow for 20% waste. The recommended gel time for this repair is 30-40 minutes. Place each ply of the patch on the release film in reverse order, largest ply first, saturating each ply with resin before the next ply is placed. Use the air bubble roller to work air out of each ply. Apply a coating of resin to the scarf surface. Position the wetted patch over the opening and smooth into place, using the squeegee on the release film to work the patch into place. Remove any air or wrinkles in the surface using a squeegee. Allow the patch to cure in place, and remove the release film after the patch cures.

5.1.10 If the damaged area is large and in way of a void, a backing plate will be required to support the repair laminate. The backing plate should be laminated of PR?, thick enough to support lamination of a repair patch over the opening in the damaged laminate. Repairs in way of buoyancy foam may use the foam to provide a surface for laminating the repair as discussed in section 5.1.5. If the area is of complex shape, use of a backing plate fabricated from a mold made from a sister craft as described in section 12.0 may be required.

If a backing plate is used (see figure 6.7), use the instructions in section 2.3 to mix an amount of filled resin sufficient to coat the edges of the backing plate to secure it to the existing laminate, plus 20% to allow for waste. Place the molded backing plate inside the cavity and bond into place using filled resin. Hold the backing plate in place with wire or screws as shown in figure 6.8. Allow the filled resin to cure and remove the clamping materials. Sand the surface of the backing plate and scarf with a 60 grit disk to provide a clean, smooth bonding surface. Remove any dust from the surface with a clean, dry rag or brush.

Using the instructions in section 2.2, mix an amount of resin sufficient to saturate the reinforcement in the repair area, plus 20% to allow for waste. The recommended get time is 3040 minutes.

Wet the prepared area with resin using a brush or spray equipment, applying resin over the surface of the scarf and backing plate, making sure that there are no dry spots on the surface. Place the first ply of reinforcement on the prepared area, orienting the material to cover the prepared scarf edge all around. Work air out of the laminate using the air bubble roller, then apply more resin to the surface before applying the next ply. Proceed with the application of subsequent plies of reinforcement, working out all entrapped air, wrinkles or voids to obtain a dense, smooth laminate. Roll each ply out with the air bubble roller to eliminate trapped air and consolidate the laminate. Figure 6.9 depicts a completed repair to damage through a laminate accessible from one side.

If the repair is to a molded surface such as the exterior of the hull or deck house, after rolling out the last ply, apply a layer of peel ply over the entire repaired area and smooth out with the rubber squeegee to obtain a smooth, uniform surface. Be sure that the edges of the peel ply extend beyond the edges of the repair laminate. Protect the repaired area from the weather and allow the repair to cure.

5.1.11 If the repair is to a laminate with a molded surface, finish the surface using the instructions in section 2.5 of this chapter.

5.1.12 If the repair is to a non-molded surface, inspect the surface for defects, air bubbles and voids, arid repair as required. If the repair area is below the waterline, use the instructions of section 2.2 to mix a quantity of non air-inhibited resin sufficient to coat the repaired area to a thickness of 10 to 20 mils, plus 20% to allow for waste. Coat the repaired area with the catalyzed resin using a brush or spray equipment, if available, and allow this surface coating to cure.

5.2 **Damage Through a Single Skin Laminate With Access From Both Sides**

This section discusses procedures for repairing a single skin laminate which is accessible from both sides. Examples of such damage include punctures or fractures in a single skin hull laminate in way of a space which is accessible from inside the craft.

5.2.1 Assemble the following tools and equipment:

- Plastic faced hammer or jeweler's hammer
- Disk grinder
- Power drill
- Jiffy mixer
- Reciprocating saw
- Shears
- Air bubble roller
- Rubber sanding block
- Respirator and personal protective equipment

5.2.2 Assemble the following materials and supplies:

- Chalk or permanent felt marker
- 24 grit grinding disks
- 60 grit grinding disks 1
- 20 grit wet-or-dry sandpaper
- Resin, promoted
- Filled resin, promoted
- Gel coat, promoted
- Non air-inhibited resin, promoted
- Catalyst
- Mat, weight as required
- Reinforcement materials, type and weight as required
- Masking rape
- Kraft paper

Release film
PVA mold release
Peel ply material
Clean, dry cotton rags
Containers for mixing resin
Wood tongue depressors
Clean paint mixing sticks
Disposable paint brush, 1-1/2" and 3"
Rubber squeegee

5.2.3 Remove interferences in way of inspecting the damaged laminate on both sides, including removal of inspection covers. Carefully clear away any loose material. Inspect the remaining intact laminate visually and by tapping with a hammer to detect cracked or delaminated material. Identify and mark the extent of the laminate to be removed. Determine whether the damaged area is large enough to require a backing plate. Use of a mold, as described by section 12.0 of this chapter, may be required to form a backing plate of complex shape. The backing plate should be fabricated in advance to prevent delaying the repairs.

5.2.4 Using a reciprocating saw, cut out the damaged laminate as marked, taking care to avoid any sharp corners or abrupt changes in direction of the cut. All corners should be well rounded, with a minimum radius of one inch, and a larger radius if possible. Reexamine the opening as cut, check for delaminations or fractures and extending the cut out area as required.

5.2.5 After the damaged laminate has been removed, mark a scarf area surrounding the damage at a distance resulting in a scarf slope of 12:1. Grind from the damaged area back to the scarf line, using a 24 grit disk. Avoid creating unevenness, sharp edges or corners in the laminate while grinding as this will make the lay-up of the reinforcement more difficult and lower the strength of the repair.

5.2.6 Grind paint away from the edges of the scarf using a 60 grit disk, being careful not to grind away the gel coat. Clean the scarfed area with a clean, dry rag or brush to remove all dust and particles. Mask around the scarfed areas with kraft paper and masking tape, leaving several inches between the edge of the scarf and the tape.

5.2.7 Using the instructions in section 2.4, prepare the reinforcement needed for the laminate repair.

5.2.8 Construct the backing plate or mold so that it is several inches larger than the edge of the scarf. The backing plate for the double scarf must be formed to support the laminate applied to the first side of the repair area. The backing plate or mold for a single side scarf should be constructed to fit on the molded surface of the laminate, as shown in figure 6.10, to simplify the surface finishing process.

5.2.9 Using the instructions in section 2.4, prepare the materials needed for the laminate repair. For a double scarf repair, estimate the total materials for each half-thickness, and assemble two material packages which will be laminated separately. Stack the materials in order of use on a clean surface.

5.2.10 Cover the backing plate with release film and place on the appropriate side of the laminate, using temporary fasteners to hold it in place. Adhesive tape may be used to secure very small backing plates. Figure 6.10 shows the attachment of a backing plate to a single skin laminate. The backing plate must fit as tightly as possible to the edge of the scarf to prevent the resin from running under the plate to the opposite side of the laminate. Remove dust from the repair area with a clean, dry rag or brush.

5.2.11 Using the instructions in section 2.2, mix an amount of resin sufficient to saturate the reinforcement in the repair area, plus 20% to allow for waste.

5.2.12 Begin laminating the patch, using a brush or spray equipment to apply a coat of resin to

the sanded area and backing plate, followed by the first layer of reinforcement. Thoroughly wet out this layer with resin. Work out any air bubbles and excess resin using the air bubble roller before placing the next ply. Continue applying layers of reinforcement, thoroughly wetting out each layer with resin and ensuring that no air bubbles are trapped within the laminate. On a molded laminate surface, build up the patch until the final ply is flush with the surrounding original laminate surface. On a non-molded laminate surface, apply the laminate required to build up the thickness approximately flush with the surrounding laminate, then add the doubler plies to reinforce the patch.

5.2.13 If repairing a molded laminate surface, apply a layer of peel ply over the patch. Work out any air pockets or bubbles with the squeegee. Allow the patched area to cure, and then remove the peel ply and backing plate.

5.2.14 Inspect the patch for voids, backing plate fastener holes and other defects and repair as required. After allowing the repairs to cure, sand the surface smooth and clean the area with a clean, dry rag.

5.2.15 Finish the molded surface of the laminate as described in section 2.5 of this chapter.

5.2.16 Finish the non-molded surface in areas below the waterline by coating with resin. Using the instructions in section 2.2, mix a quantity of non air-inhibited resin sufficient to coat the repaired area to a thickness of 10 to 20 mils plus 20% to allow for waste. Coat the repaired area with the catalyzed resin using a brush or spray equipment, and allow this surface coating to cure.

5.3 **Damage Through One Skin of a Cored Laminate**

This section discusses procedures for repairing a puncture or fracture through one skin of a cored laminate. Examples of such damage include punctures or fractures in the outer skin of a cored hull or deck. If only surface damage is evident, repair the skin using the instructions in section 4.0 of this chapter. Figure 6.11 depicts a repair to damage through one skin of a cored laminate.

5.3.1 Assemble the following tools and equipment:

- Plastic faced hammer or jeweler’s hammer
- Disk grinder
- Router
- Power drill
- Jiffy mixer
- Shears 3/4" wood chisel

Utility knife
Air bubble roller
Rubber sanding block Respirator
Respirator and personal protective equipment

5.3.2 Assemble the following materials and supplies:

Chalk or permanent felt marker
24 grit grinding disks
60 grit grinding disks
120 grit wet-or-dry sandpaper
Gel coat, promoted
Resin, promoted
Non air-inhibited resin, promoted
Syntactic foam
Catalyst
Mat, weight as required
Reinforcement materials, type and weight as required
Foam core, material type, density and thickness as required
Masking tape
Kraft paper
Release film
Peel ply material
Clean, dry cotton rags
Containers for mixing resin
Wood tongue depressors
Clean paint mixing sticks
Disposable paint brushes, 1-1/2" & 3
Rubber squeegee

5.3.3 Inspect the damaged area visually and by tapping with the hammer to determine the extent of damaged laminate. The damaged areas should be clearly marked prior to cutting away any laminate. If the skin damage does not affect the core, and the core is not wet, the skin may be removed by grinding, carefully avoiding damage to the core. The skin may then be repaired using the instructions in section 5.1 of this chapter, in the same manner as laminating a repair over buoyancy foam. If minor damage to the core is discovered, it may be filled with syntactic foam. Major damage requires removal and replacement of the core as described below.

5.3.4 Using the router, with cut depth limited to avoid cutting the inner skin, cut through the outer face and core.

5.3.5 Carefully using the utility knife and chisel, clear away the outer skin and core, exposing the inner skin of the laminate. Inspect the trimmed area to make sure all damaged material is removed. If the core material is wet, enlarge the opening of the cut until dry core is found. Make sure the inner face is still undamaged. If the inner face is damaged, follow the instructions for repair in section 6.4.

5.3.6 After the damaged laminate has been removed, mark a scarf area surrounding the damage at a distance resulting in a scarf slope of 12:1. Grind from the damaged area back to the scarf line, using a 24 grit disk. Avoid creating unevenness, sharp edges or corners in the laminate while grinding as this will make the lamination of the reinforcement more difficult and lower the strength of the repair.

5.3.7 Grind paint away from the edges of the scarf using a 60 grit disk, being careful not to grind away the gel coat. Clean the scarfed area with a clean, dry rag or brush. Mask around the scarfed areas with kraft paper and masking tape, leaving several inches between the edge of the scarf and the tape.

5.3.8 Measure the required size of replacement core material. For areas less than 2 inches in diameter, the core material can be replaced with syntactic foam. For all other areas, consult the Boat Information Book for the type of foam that was used in the original laminate. If the core material removed is balsa, replace the balsa with Divinycell H-l00 foam of the same thickness as the balsa. Otherwise, replace the damaged foam with the same core material used in the original laminate. Measure and cut the replacement foam so that a tight fit is achieved between the new piece and the existing core. If the repair area is fairly flat, flat or plain core may be used instead of contoured core. Repair areas with curvature will require use of contoured core material.

5.3.9 Mix an amount of resin sufficient to prime the replacement core and the exposed laminate core, plus 20% to allow for waste, using the instructions in section 2.2. The recommended gel time for the resin is 10-20 minutes. Prime the replacement core, the repair laminate and the exposed original core with the catalyzed resin before placing it in the laminate. Use a paint brush and a squeegee to apply the resin, and make sure all faces of the replacement core are thoroughly coated, except for the face to which the replacement laminate will be bonded.

The replacement core material is bonded in place using syntactic foam. Use the brand of syntactic foam recommended by the manufacturer of the replacement core material. Follow the directions provided by the syntactic foam manufacturer for the quantity of catalyst and the method of mixing the catalyst into the syntactic foam. Apply the syntactic foam to the laminate and exposed original core to which the replacement core will be bonded. Use a sufficient quantity of syntactic foam to fill all voids between the replacement core and the existing core and repair laminate. Press the replacement core into the prepared void, making certain that the core is properly bedded in the syntactic foam. Allow the syntactic foam to cure.

5.3.10 Inspect the replacement core for voids and unbonded areas, tapping the surface with a coin to detect voids between the core and the laminate. If voids are detected, remove the affected section of the core and replace it, following the instructions given in sections 5.3.8-5.3.10.

5.3.11 Sand the core surface so that the replacement core surface is flush with the original core surface. Clean the area with a clean, dry rag or brush.

5.3.12 Using the instructions in section 2.3, prepare the reinforcing materials needed for the repair of the outer skin. Note that 1-ounce mat must be used for the first ply applied to the core.

Assemble the reinforcement layers in place near the prepared area, with the first ply to be applied on top of the stack.

5.3.13 Using the instructions in section 2.2, mix enough resin to coat the exposed core, plus 20% to allow for waste. The recommended gel time is 10-20 minutes. Apply a sealing coat of resin to the exposed core, using a brush and squeegee to thoroughly coat the core.

5.3.14 Using the instructions in section 2.2, mix enough resin to saturate the reinforcement for the repair, plus 20% to allow for waste. The recommended gel time is 30-40 minutes. Apply a thin layer of resin to the repair area. Lay the first ply of mat on the wet surface and roll with the air bubble roller until the mat is thoroughly wet out and free of trapped air.

Add more resin to the surface and lay on the first ply of reinforcement, wetting out by using the air bubble roller and the squeegee to remove air from the laminate. Continue with reinforcement application until the required thickness has been laminated. On molded laminate surfaces, a layer of peel ply may be placed over the last ply of mat to smooth out the laminate and minimize grinding. Leave the peel ply in place until the laminate face has cured and the work is ready for sanding and finishing.

5.3.15 Finish repairs in way of molded laminate surfaces using the instructions in section 2.5.

5.3.16 Finish the non-molded surface in areas below the waterline by coating with resin. Using the instructions in section 2.2, mix a quantity of non air-inhibited resin sufficient to coat the repaired area to a thickness of 10 to 20 mils plus 20% to allow for waste. Coat the repaired area with the catalyzed resin using a brush or spray equipment, and allow this surface coating to cure.

5.4 **Damage Through a Cored Laminate With Access From One Side**

This section discusses procedures for repairing a puncture or fracture through both the outer and inner skins of a cored laminate. Examples of such damage include punctures or fractures through a cored hull or deck in way of inaccessible voids or buoyancy foam compartments.

5.4.1 Assemble the following tools and equipment:

- Plastic faced hammer or jeweler's hammer
- Disk grinder
- Router
- Reciprocating saw
- Power drill
- Jiffy mixer
- Shears 3/4" wood chisel
- Utility knife
- Air bubble roller
- Rubber sanding block
- Respirator and personal protective equipment

5.4.2 Assemble the following materials and supplies:

- Chalk or permanent felt marker
- 24 grit grinding disks
- 60 grit grinding disks
- 120 grit wet-or-dry sandpaper
- Gel coat, promoted
- Resin, promoted
- Non aft-inhibited resin, promoted
- Syntactic foam

Catalyst
Mat, weight as required
Reinforcement materials, type and weight as required
Foam core, material type, density and thickness as required
Masking tape
Kraft paper
Release film
Peel ply material
Clean, dry cotton rags
Containers for mixing resin
Wood tongue depressors
Clean paint mixing sticks
Disposable paint brushes, 1-1/2” & 3”
Paint roller, short nap
Rubber squeegee

5.4.3 Inspect the damaged area visually and by tapping with the hammer to determine the extent of the damaged laminate. Mark the extent of the damage.

5.4.4 Using the reciprocating saw, cut through the outer skin, core and inner skin, removing only enough laminate to clear the damaged material. The cut made through the entire laminate thickness is called ‘first cut line” in figure 6.13, and should be made with corners rounded to a minimum 3 inch radius. Inspect the trimmed area to make sure that all damaged material is removed. If the core material is wet, enlarge the opening of the first cut until dry core material is found.

5.4.5 Mark a line on the outer face laminate extending a distance from the cut edge at least 12 times the inner face laminate thickness to clear the core away from the scarf area of the inner skin. Using the router, make a cut around the opening, cutting the outer skin and core without cutting the inner skin. This is labeled “second cut line” in figure 6.13.

5.4.6 Using the utility knife and chisel, clear away the trimmed outer laminate and core, being careful not to damage the inner face laminate. Reinspect for damaged laminate, extending the cut out areas as described by sections 5.4.4 and 5.4.5.

5.4.7 Using the disk grinder and 24 grit disks, grind the inner ply exposed face and the outer face laminates to produce a scarf with a 12:1 slope as shown in figure 6.13. Small openings may require use of a die grinder to permit access to the inner skin scarf surface. Remove any paint or coatings from around the prepared opening for a distance of about three inches, using the disk grinder and a 60 grit disk, being careful not to grind through the gel coat.

5.4.8 Repair the inner face laminate using the methods described in section 5.2. After the inner face repair laminate has cured, grind the surface to which the core will be bonded smooth using a 60 grit disk. Clean the area with a clean, dry rag or brush to remove dust.

5.4.9 Measure the cavity for the required size of replacement core material. For all other areas, consult the Boat Information Book to determine the type of core that was used in the original laminate. If the original core material is balsa, replace the removed core with Divinycell H-100 foam of the same thickness as the balsa. Otherwise, replace the damaged foam with the same core material used in the original laminate. Measure and cut the replacement foam so that a tight fit is achieved between the new piece and the existing core. Use of contoured core material is recommended.

5.4.10 Mix an amount of resin sufficient to prime the replacement core and the exposed laminate core, plus 20% to allow for waste, using the instructions in section 2.2. The recommended gel time for the resin is 10-20 minutes. Prime the replacement core, the repair laminate and the exposed original core with the catalyzed resin before placing it in the laminate. Use a paint brush and a squeegee to apply the resin, coating all faces of the replacement core which will be bedded in syntactic foam.

5.4.11 The replacement core material should be bonded to the repair area using syntactic foam. Use the brand of syntactic foam recommended by the manufacturer of the replacement core material. Follow the directions provided by the syntactic foam manufacturer when mixing the syntactic foam. Apply the syntactic foam to the faces of repair laminate and exposed original core to which the replacement core will be bonded. Use a sufficient quantity of syntactic foam to fill all voids between the replacement core and the existing core and repair laminate. Press the replacement core in place, securing the core with weights or temporary shoring to assure complete contact between the core and the syntactic foam.

5.4.12 After the syntactic foam has cured, inspect the replacement core for voids and unbonded areas, tapping the surface with a coin or jeweler's hammer to detect voids between the core and the laminate. If voids are detected, remove the affected section of the core and replace it, following the instructions given in sections 5.4.9-5.4. 11.

5.4.13 Sand the core surface so that the replacement core is flush with the original core surface. Clean the area with a clean, dry rag or brush.

5.4.14 Using the instructions in section 2.3, prepare the reinforcing materials needed for the repair of the outer skin. Note that 1-ounce mat must be used for the first ply applied to the core. Assemble the reinforcement layers in place near the prepared area, with the first ply to be applied on top of the stack.

5.4.15 Using the instructions in section 2.2, mix enough resin to coat the exposed core, plus 20% to allow for waste. The recommended gel time is 10-20 minutes. Apply a sealing coat of resin to the exposed core, using a brush and squeegee to coat the core. Lightly roll over the sealed surface with the paint roller to remove excess resin from the core.

5.4.16 Using the instructions in section 2.2, mix enough resin to saturate the reinforcement lbrfor the repair, plus 20% to allow for waste. The recommended gel time is 30-40 minutes. Apply a thin layer of resin to the repair area. Lay the first ply of mat on the wet surface and roll with the air bubble roller until the mat is thoroughly wet out and free of trapped air.

Add more resin to the surface and lay on the first ply of reinforcement, wetting out with additional resin as required and using the air bubble roller and the squeegee to remove air from the laminate. Continue with

reinforcement application until the required thickness has been laminated. On molded laminate surfaces, a layer of peel ply may be placed over the last ply of mat to smooth out the laminate and minimize grinding. Leave the peel ply in place until the laminate face has cured and the work is ready for sanding and finishing.

5.4.17 Finish repairs in way of molded laminate surfaces using the instructions in section 2.5.

5.4.18 Finish the non-molded surface in areas below the waterline by coating with resin. Using the instructions in section 2+2, mix a quantity of non air-inhibited resin sufficient to coat the repaired area so a thickness of 10 to 20 mils plus 20% to allow for waste. Coat the repaired area with the catalyzed resin using a brush or spray equipment.

5.5 Damage Through a Cored Laminate With Access From Both Sides

This section discusses procedures for repairing a puncture or fracture through both outer and inner skins of a cored laminate, where both sides are accessible. Figure 6.13 depicts a repair to damage through a cored laminate where both sides are accessible.

5.5.1 Assemble the following tools and equipment:

- Plastic faced hammer or jeweler's hammer
- Disk grinder
- Power drill
- Jiffy mixer
- Shears
- Reciprocating saw
- Air bubble roller
- Rubber sanding block
- Respirator arid personal protective equipment

5.5.2 Assemble the following materials and supplies:

- Chalk or permanent felt marker
- 24 grit grinding disks
- 60 grit grinding disks
- 120 grit wet-or-dry sandpaper
- Gel coat, promoted
- Resin, promoted
- Non air-inhibited resin, promoted syntactic foam
- Catalyst
- Mat, weight as required
- Reinforcement materials, type and weight as required
- Foam core, material type, density and thickness as required
- Masking tape
- Kraft paper
- Release film
- Peel ply material

Clean, dry cotton rags
Containers for mixing resin
Wood tongue depressors
Clean paint mixing sticks
Disposable paint brushes, 1-1/2" & 3"
Paint roller, short nap
Rubber squeegee

5.5.3 Inspect the damaged area visually and by tapping with the hammer to determine the extent of the damaged laminate. Mark the extent of the damage.

5.5.4 Using the reciprocating saw, cut out the core as shown in figure 6.14. Corners of the cut out should be cut with a corner radius of not less than 3 inches. Inspect the laminate to ensure all damage is removed, and enlarge the hole as necessary.

5.5.5 Mark a scarf line on each face of the laminate for a 12:1 scarf based on the face laminate thickness. Grind the laminate from the edge of the hole to the scarf line using a 24 grit disk (see figure 6.14).

5.5.6 Measure the cavity for the required size of replacement core material. For all other areas, consult the Boat Information Book to determine the type of core that was used in the original laminate. If the original core material is balsa, replace the removed core with Divinycell H-lO0 foam of the same thickness as the balsa. Otherwise, replace the damaged foam with the same core material used in the original laminate. Measure and cut the replacement foam so that a tight fit is achieved between the new piece and the existing core. Use of flat (not contoured) core. material is recommended if the repair area is fairly flat.

5.5.7 If the core is not stiff enough to be self supporting during the lamination process, or if the repair laminate has curvature, install temporary shoring to support the core until one face of the laminate has been completed.

5.5.8 Mix an amount of resin sufficient for priming the replacement core and the exposed laminate core, plus 20% to allow for waste (follow the instructions in section 2.2 of this chapter). The recommended gel time for the resin is 10-20 minutes. Prime the replacement core and the exposed stiffener core with the catalyzed resin before placing it in the laminate. Use a paint brush and a squeegee to apply the resin, coating all faces of the replacement core which will be bedded in syntactic foam.

5.5.9 The replacement core material should be bonded to the repair area using syntactic foam. Use the brand of syntactic foam recommended by the manufacturer of the replacement core material. Follow the directions provided by the syntactic foam manufacturer when mixing the syntactic foam. Apply the syntactic foam to the faces of repair laminate and exposed original core to which the replacement core will be bonded. Use a sufficient quantity of syntactic foam to fill all voids between the replacement core and the existing core and repair laminate. Press the replacement core in place, securing the core with weights or temporary shoring to assure complete contact between the core and the syntactic foam.

5.5.10 When the syntactic foam has cured, sand the core surface so the replacement core is flush with the original core. After sanding, fill any voids that appear in the core with syntactic foam. Carefully grind the repair area smooth using a 60 grit disk. Dust the area with a clean, dry rag or brush.

5.5.11 Using the instructions in section 2.3, prepare the materials needed for the repair of the outer skin. Note that 1-ounce mat must be used for the first ply applied to the core. Assemble the reinforcement layers in place near the prepared area, with the first ply to be applied on top of the stack.

5.5.12 Using the instructions in section 2.2, mix enough resin to coat the exposed core, plus 20% to allow for waste. The recommended gel time is 10-20 minutes. Apply a sealing coat of resin to the exposed core, using a brush and squeegee to apply the resin to the core. Lightly roll over the sealed surface with the paint roller to remove excess resin from the core.

5.5.13 Using the instructions in section 2.2, mix enough resin to saturate the reinforcement for the repair, plus 20% to allow for waste. The recommended gel time is 30-40 minutes. Apply a thin layer of resin to the repair area. Lay the first ply of mat on the wet surface and roll with the air bubble roller until the mat is thoroughly wet out and free of trapped air.

Add more resin to the surface and apply the first ply of reinforcement, wetting out by using the air bubble roller and the squeegee to remove air from the laminate. Continue with reinforcement application until the required thickness has been laminated. On molded laminate surfaces, a layer of peel ply may be placed over the last ply of mat to smooth out the laminate and minimize grinding. Leave the peel ply in place until the laminate face has cured and the work is ready for sanding and finishing.

5.5.13 Finish repairs in way of molded laminate surfaces using the instructions in section 2.5.

5.5.14 Finish the non-molded surface in areas below the waterline by coating with resin. Using the instructions in section 2.2, mix a quantity of non air-inhibited resin sufficient to coat the repaired area to a thickness of 10 to 20 mils plus 20% to allow for waste. Coat the repaired area with the catalyzed resin using a brush or spray equipment, and allow this surface coating to cure.

6.0 **DELAMINATION**

Delamination involves separation of the plies of the laminate. Figure 6.15 shows typical edge and bubble delamination. Edge delamination occurs when plies become separated at the edge of the laminate. Bubble delamination occurs when plies become separated in the middle of a laminate without the delamination delamination reaching the edge. Delamination may also involve separation of secondary bonds from the laminate. Delamination of a bond angle or stiffener is shown in figure 6.16. Delamination can result from stress on a part, from poor bond between plies, or from exposure of an undercured part to heat or sunlight.

The repair methods for edge and bubble delaminations and bond angle or stiffener delamination are the same as the methods for repair of laminate fractures, and are described in section 4.0 of this chapter. Debonds of laminate from the core of a panel, bulkhead or longitudinal or transverse framing are discussed in section 7.0 of this chapter.

7.0 **CORE DEBOND REPAIR**

Delamination of the skin of a cored laminate from the core can be detected by a movement of the skin plies away from the core when a load is applied. Tapping a debonded area with a hammer may indicate separation of the skin from the core by a hollow sound. Core debonds may occur in any cored part, including shell plating, decks, bulkheads and transverse and longitudinal framing. A typical debond of a laminate from a core is depicted in figure 6.16.

7.1 Assemble the following tools and equipment:

- Sand bags, weights or vacuum bag equipment
- Plastic faced hammer or jeweler's hammer
- Disk grinder
- Shop vacuum cleaner
- Plastic syringe
- Power drill
- Jiffy mixer
- Drill bit - 1/4" with adjustable stop sleeve
- Respirator and personal protective equipment

7.2 Assemble the following materials and supplies:

- Chalk or permanent felt marker
- 24 and 60 grit grinding disks
- Wet-or-dry sandpaper, 120 grit
- Resin, promoted
- Filled resin, promoted catalyst
- Masking tape
- Clean, dry, cotton rags
- Containers for mixing resin
- Wood tongue depressors
- Clean paint mixing sticks
- Self tapping screws, pan head, #12 (length as required)
- Disposable paint brush, 1-1/2" & 3"
- Peel ply material

7.3 Mark the delaminated area to define the extent of the repair. Remove paint and coatings from the laminate face in the area outlined by sanding with a disk grinder fitted with a 60 grit disk. Within the outlined area, drill holes through the unbonded ply only. A spacer should be fined to the drill bit and adjusted to act as a stop for the depth drilled, preventing drilling into the core. Space the holes approximately 3 inches apart in the debonded area.

7.4 After the holes are drilled, clean the area and the boles with a shop vacuum cleaner to remove dirt. If water is present between the core and the laminate skin, repair the debonded area using the instructions in section 5.4 of this chapter, since a core to skin bond which has been water soaked cannot be reliably repaired by injecting resin. If the laminate skin cannot be fit tightly against the core by vacuum bagging, self-tapping screws, weights or other means, repair the debonded area using the instructions in section 5.4.

7.5 If the debonded area is in a deck, flat or other horizontal surface, vacuum bagging, weights or self-tapping screws may be used to press the laminate skin against the core. Debonded core in vertical or overhead surfaces will require the use of vacuum bagging or self-tapping screws to force the skin into contact with the core. Where weights are used, care must be taken to avoid distortion of the panel being repaired, since it will retain this shape once the resin has cured. Vacuum bagging or the use of self-tapping screws will not distort the panel.

7.6 Using the instructions in section 2.2, prepare a resin mixture to be forced from a syringe into the void between the laminate and the core. The recommended gel time is 30 to 40 minutes.

7.7 Trim the nozzle of the syringe to fit the bole closely. Fill the syringe with catalyzed resin and force resin into the hole until resin begins to flow from adjacent holes. Remove the syringe and seal the bole with tape.

When all the holes are filled with resin, and before the resin hardens, wipe up any excess resin from the surface and cover the area with a peel ply. Place vacuum bag or weights over the peel ply to press the laminate skin securely into place. If weights or a vacuum bag are not used, omit the peel ply and use self-tapping screws to force the laminate into contact with the core.

7.8 After the resin has cured, remove the vacuum bag, weights, clamping screws and peel ply. Clean off the excess resin and sand the area with the disk grinder and a 120 grit disk to smooth and prepare for painting and coating. After sanding, inspect and refill any unfilled boles, holes that were used for screws or voids in the surface with tilled resin, mixed using the instructions in section 2.3. The recommended gel time is 10-20 minutes. Allow the resin to cure, finish sanding the repair area, and apply primers and coatings as required by the Boat Information Book.

8.0 **REPAIRS IN WAY OF MECHANICAL CONNECTIONS**

Defects in GRP laminates in way of mechanical connections can usually be detected by visual examination for cracks or crazing of the laminate around the fasteners or fittings. Overloading of mechanical connections, such as mooring fittings, handrails, or hoisting fittings can result in crushing or cracking of the laminate at the edges of the fitting. Both sides of the laminate in way of fittings should be inspected if possible. Defects or damage to the laminate in the way of hoisting fittings should be corrected immediately. After the laminate is repaired, the hoisting fittings must be tested after repair prior to any further hoisting of the craft. The NAVSEASYSCOM Life Cycle Manager for Boats and Craft should be contacted prior to attempting any repair of damage to laminates in way of hoisting fittings.

Leaking around mechanical fasteners such as strut bolts, shaft log fasteners, hull flanges, etc., may indicate laminate damage, laminate deterioration or wear around the fasteners, or simply loose fasteners. Fasteners that are leaking when the craft is waterborne should be marked. The tightness of these fasteners should be checked when the craft is out of the water. Tightening of bolts should be accomplished when both ends of the fastener can be observed. Over-tightening of fasteners while the craft is waterborne could result in serious problems, as the fastener may wring off or the threads may strip, causing increased leaking.

Foundation fasteners, such as in engine foundations, gun mounts, etc., should not be removed until the machinery or equipment that is attached is lifted clear of the mount or until the load is temporarily supported, relieving the bolts of any load while repairs are made.

After the defective areas are marked repairs can be made to the laminate in way of the fasteners using the following instructions:

8.1 Assemble the following tools and equipment:
- Disk grinder
- Die grinder fitted with cone bit
- Putty knife, 1-1/2"

8.2 Assemble the following materials and supplies:
- Filled resin, pre-promoted
- Chalk or permanent ink marker
- Cleaning solvent
- Clean, lint free cotton rags
- 24 grit grinding disks
- 60 grit grinding disks
- 60 grit wet-or-dry sandpaper
- 120 grit wet-or-dry sandpaper
- Mixing container for resin
- Masking tape
- Clear plastic film
- Release film
- Bending compound

8.3 Remove the through bolts from the marked area, marking each bolt, if necessary, to facilitate replacement. Remove any washers or backing plates, marking to aid in replacing the plate or washers. Remove any bedding compound or wicking from the area of the holes and wash the area with solvent to remove traces of compound. Use the die grinder to remove any defective laminate in way of cracks, elongated bolt holes and other damage.

8.4 Repairs to the laminate surface in way of fasteners can be made using the instructions in section 3.0 or 4.0 of this chapter. Where the holes are elongated due to wear, grind out any frayed reinforcement. If the elongation of the hole is 1/4" or less, fill the entire hole with filled resin. Allow the filler to cure. Grind or sand the surface with 60 grit wet-or-dry sandpaper to the original surface. If the elongation of the hole is greater than 1/4" or the surrounding laminate is damaged, repair the hole using the instructions in section 3.0, 4.0 or 5.0.

8.5 After repairs have been made to the laminate and any elongated boles filled, position the removed hardware and mark the location for redrilling the repaired holes. Using the drill sized to fit the removed bolt, drill through the filled hole.

8.6 Bed high strength fittings in filled resin prepared using the instructions in section 2.3. Reinstall the bolts, nuts and washers.

8.7 After the bolted item is refastened and the equipment is in place, realign the machinery or equipment and test to the original specifications.

8.8 Repair paint and coatings using primers and paint systems specified in the Boat Information Book.

9.0 REPAIR OF TUBULAR STRUCTURES

Tubular structures utilized on most Navy craft are limited to engine exhaust tubing, stern tubes and rudder tubes.

Tubular items made by the pultrusion process, such as stanchions, are not easily repairable to the original condition, therefore repairs should only be accomplished in emergency situations, and should be regarded as temporary repairs until a new part can be obtained.

Minor repairs to GRP exhaust tubing, rudder tubes or stem tubes may be accomplished in the field using the following instructions:

9.1 Assemble the following tools and equipment:

Disk grinder

9.2 Assemble the following materials and supplies:

Chalk, for marking
24 grit grinding disks
Wet-or-dry sandpaper, 60 grit
Resin, promoted
Catalyst
Mat, 1-1/2 oz./sq. ft.
Fiberglass cloth, style number 1800 C
lean, dry cotton rags
Containers for mixing resin
Wood tongue depressors
Clean paint mixing sticks
Release film
Masking tape
Kraft paper

9.3 Inspect the damaged or punctured tubular laminate to determine the extent of the damage. Mark the area for repairs with the chalk. Using the disk grinder with the 24 grit disk, carefully grind back the laminate in way of the damage to a taper of 12:1 around any opening in the tubular structure. Wipe the area with a clean, dry rag or brush to remove dust or loose matter.

9.4 Using the instructions in section 2.3, prepare the reinforcing materials needed for the repair. Style number 1800 cloth should be used to make the repair. If the damage penetrates the tube, also prepare a piece of mat to be used to seal the opening in the tube.

9.5 If the damage penetrates through the tubular laminate or if the grinding penetrates the laminate, mix a small amount of resin using the instructions in section 2.2, and coat the edges of the opening. Saturate the mat with resin and place over the opening. Allow the bridging patch to cure, forming a seal over the opening.

9.6 When the mat has cured, prepare an amount of resin sufficient to saturate the reinforcement in the repair area, plus 20% to allow for waste, as described in section 2.2. Wet out and apply these plies individually to the prepared area, beginning with the smallest ply, until the patch is complete. Allow the patch to cure, inspect and repair as required.

10.0 **REPAIR OF BLISTERS**

Gel coat blisters appear as a localized swelling on the surface of a laminate. The area of the swelling can vary from the size of a pin head up to the size of a quarter and larger. The smaller blisters usually affect only the gel coat, while larger blisters may penetrate into the laminate. Blisters may appear on any gel coat surface, but are most common on the normally wetted area of the hull bottom, particularly near the waterline. It is best to inspect a craft for blisters in the hull surface immediately after hauling the craft from the water, as many of the smaller blisters will shrink and disappear as the laminate dries.

The method of repair will be depend on the severity of the blister problem. The following instructions cover repair limited numbers of blisters. Blistering affecting large areas of laminate may require complete removal of the paint and gel coat using a disk grinder or gel coat peeler. If the surface layer of mat is severely damaged, it may be necessary to strip the laminate surface, repairing it using the instructions in section 4.0 of this chapter. The gel coat must then be replaced by spraying a 20 to 30 mil coating over the laminate surface, and the surface sanded and painted in accordance with the requirements of the Boat Information Book.

Figure 6.17 depicts a typical gel coat blister.

10.1 Assemble the following tools and equipment:

- Die grinder
- Power drill
- Jiffy mixer
- 3/4” wood chisel
- Respirator and personal protective equipment

10.2 Assemble the following materials and supplies:

- Chalk or permanent felt marker
- Cone-shaped abrasive bit for die grinder
- 120 grit wet-or-dry sandpaper
- Gel coat, promoted
- Resin, promoted
- Filled resin
- Containers for mixing resin
- Wood tongue depressors
- Clean paint mixing sticks
- Clean, dry, cotton rags
- Disposable paint brushes, 1-1/2"
- Rubber squeegee
- Masking tape
- Clear plastic film

10.3 As soon as possible after hauling the craft out of the water, thoroughly clean the bottom to remove fouling and dirt and inspect the surface for blisters. Mark blisters as they are found.

10.3 After examining the entire hull and marking blister locations, puncture the surface of each blister with the chisel point, allowing any entrapped liquid to drain. Open up the surface of the larger blisters by carefully cutting with the chisel.

WARNING

THE FLUID IN OSMOTIC BLISTERS CONTAINS HAZARDOUS CHEMICALS WHICH WILL DAMAGE THE EYES AND SKIN. WEAR FULL FACE PROTECTION, GLOVES AND COVERALLS WHEN OPENING BLISTERS. IF SKIN IS EXPOSED TO BLISTER FLUID, WASH THE AFFECTED AREA IMMEDIATELY. IF EYES ARE EXPOSED TO BLISTER FLUID, IMMEDIATELY FLUSH WITH WATER AND SEEK MEDICAL ATTENTION.

10.4 Make sure that all bilges in the craft are dry and free of water and oil. Allow the hull to air dry for as long as time permits. If possible, place the craft in a heated storage area to accelerate the drying process. Do not wash the hull with solvents since impurities may permeate the laminate, preventing repairs from bonding. If the hull must be stored outdoors, it may be protected from further moisture by covering with clear plastic film sealed with masking tape until repairs can be made. Leave the plastic cover open at the bottom to permit water vapor to escape while protecting the laminate from water and other contamination.

10.5 After the hull in way of the blisters is dry, prepare the blisters for repair by grinding, leaving a 12:1 taper scarf at the edges of the blisters. Do not grind deeper than necessary to assure that all damaged or wet laminate is removed. If the grinding penetrates deeper than the surface ply of mat, repair the blister using the instructions in section 4.0 of this chapter. Clean the area with a clean dry rag or brush.

10.6 Using the instructions in section 2.2, prepare resin to coat the blisters, allowing 20% excess for waste. Coat the voids with resin, working resin into any exposed fibers.

10.7 Allow the priming coat of resin about one hour to gel. Mix a quantity of filled resin sufficient to fill the blisters, allowing an additional 20% for waste. Fill the prepared areas with the filled resin and smooth the surface using the squeegee. Allow the filled resin to cure and inspect the repair. If voids or surface porosity are found , grind out any voids and reapply filled resin, smoothing the surface with the squeegee.

10.8 After the filled resin has cured, sand the surface of the repair area with 120 grit wet-or-dry sandpaper and apply coatings as specified by the Boat Information Book.

11.0 REPAIR OF PIGMENTED GEL COAT

Pigmented gel coat is used in some Navy FRP craft, and most commercial FRP craft, to provide a finished molded surface without the need for painting. Pigmented gel coat, if properly maintained, will not require painting for several years, which reduces maintenance costs and makes repairs to FRP surfaces easier. However, repairs to pigmented gel coat require more care than the surface damage repair methods described in section 3.0 of this chapter to produce a repair that matches the color and gloss of the surrounding gel coat.

Gel coat defects usually consist of surface gouges' and abrasion or small cracks due to stress on the laminate or to unreinforced gel coat in way of voids between the gel coat and the laminate.

The most common locations of such defects are:

(1) Around insides of corners, such as the intersection of cabin or coaming with the deck.
(2) Around the outside of corners such as the chine, transom and spray rails
(3) Near corners of openings in deck, cabin and flat laminates.
(4) Around any highly stressed areas with mechanical fasteners, such as cleats, chocks, exterior hoisting fittings, backing plates, strut palms, rail stanchion sockets, canopy socket fittings, etc.

Cosmetically acceptable repairs to pigmented gel coat may become impractical if large areas are damaged, or if the gel coat has deteriorated due to long term environmental exposure. In such cases, it may be best to repair the gel coat using the instructions in section 3.0 of this chapter and paint the craft. If it appears that painting of a craft constructed with pigmented gel coat will be necessary, contact the NAVSEASYSCOM Life Cycle Manager for Boats and Craft for authorization to paint the craft and for painting instructions.

11.1 Assemble the following tools and equipment:

Die grinder
Wood chisel, 3/4"
Putty knife, 1-in-1/2"

11.2 Assemble the following materials and supplies:

Chalk or permanent ink marker
Cone-shaped abrasive bit for die grinder
Gel coat, pre-promoted, color to match existing gel coat
Cleaning solvent
Clean, lint-free cotton rags
Wet-or-dry sandpaper, 120 grit
Wet-or-dry sandpaper, 220 grit
Wet-or-dry sandpaper, 400 grit
Rubbing compound
Masking tape
Release film

11.3 Using the wood chisel point, carefully cut away loose gel coat in way of voids, if present. Using the die grinder, yea out cracks in the gel coat to make them open enough to fill with gel coat. Using the 120 grit wet-or-dry sandpaper, sand the edges of voids back to a sound gel coat surface. Clean the repair area with a clean, dry rag. Make certain that the repair area is completely dry.

11.4 When several areas have been prepared as above, prepare the gel coat using the instructions in section 2.2 of this chapter.

115 Using the 1-1/2 inch putty knife, apply the gel coat to the void areas sufficiently to fill the voids slightly higher than the surrounding surface, taking care to press the gel coat into the exposed laminate surface. When the application is complete, cut a piece of release film large enough to cover the area and press it in place over the patch, smoothing out the surface flush with the surrounding area using the squeegee. The use of the release film may not be practical in highly curved areas and inside corners. Additional gel coat should be left on these surfaces to provide sufficient material to sand flush.

11.6 After the patch has cured, peel off the release film, if used, and sand the surface flush with the surrounding area, being careful not to sand through the original gel coat adjacent to the repair. Carefully wet sand the repaired area with 220 grit wet sandpaper, followed by 400 grit wet sandpaper. After sanding the repair smooth, polish the area with a rubbing compound and a clean rag.

12.0 FABRICATION OF BACKING PLATES AND MOWS FOR REPAIRS

Repairs to sections of hull, deck, cabin or other laminates that include areas with complex shapes or large areas of repair require fabrication of a backing plate using a sister craft as a male plug. The backing plate may be secured to the outside of the laminate if the laminate is accessible from both sides, or may be attached to the inside of the repair area when the repair is only accessible from outside the craft.

If large areas of laminate are being repaired, a mold may be taken from a sister craft and used to fabricate a replacement section of laminate. The replacement laminate may then be bonded to the original laminate using methods described in sections 5.2 or 5.5.

Figure 6.19 depicts fabrication of a mold taken from an existing craft.

12.1 Assemble the following tools and equipment:

- Die grinder fitted with cone bit
- Putty knife, l-1/2”
- Power drill
- Jiffy mixer
- Rubber sanding block
- Putty knife (1-1/2 and 3")
- Shears
- Squeegee
- Air bubble roller
- Respirator and personal protective equipment

12.2 Assemble the following materials and supplies:

Filled resin
Resin (promoted)
Mat (1 or 1-1/2 oz/sq ft)
Reinforcement (24 oz./sq yd woven roving or other reinforcement)
Core material (if required)
Plywood for framing (thickness as required)
Cleaning solvent
Chalk or permanent ink marker
Clean, lint-free cotton rags
Wet-or-dry sandpaper, 120 grit
Wet-or-dry sandpaper, 400 grit
Sanding disk, 24 grit
Mixing containers for resin
Masking tape
Release film

12.3 Measure and mark the area to be repaired on the craft subject to the repair and transfer the measurements and marks to another craft, preferably from the same builder and with a hull number close to the bull number of the craft under repairs. This bull or laminate will become the 'plug' or male mold for the temporary mold.

12.4 If possible, depending upon the configuration and size of the craft, rotate the area to be used as a plug so that the layup of the mold will be down hand. This operation may not be practical, but would facilitate the making of the mold.

12.5 After selection of the area to be molded, the area must be cleaned by removing dust, dirt and any imperfections in the surface of the plug. Nicks and gouges should be filled with filled resin, and the area should be sanded smooth with 400 grit wet-or-dry sandpaper to present a smooth surface.

12.6 Wax and polish the area to be molded using mold release wax. Apply three coats of wax, polishing between coats. Apply a coat of liquid polyvinyl alcohol (PVA) over the surface, forming a release film. The liquid PVA may be sprayed over the surface, or for small areas, the film may be applied with a soft brush.

Make sure that the surface to be used for the mold is completely covered with the release agent. Do not touch the prepared area with the hands. Allow the release agent to air dry completely. If defects appear on the film indicating that it is porous or incomplete, reapply the release agent.

12.7 Mask off the layup area for the mold with kraft paper and masking tape to protect the adjacent laminate. Prepare gel coat using the instructions in section 12 and apply to the mold area in a thickness of 20-30 mils, as measured with the wet film thickness gage. The gel coat should be applied by spray, although areas of four square feet or less may be applied by brush.

12.8 When the gel coat has cured, it is ready to receive the first ply of mat. Using the instructions in section 2.2, prepare laminating resin and apply to the gel coated area. Lay on a single ply of 1-ounce mat and roll the surface with the air bubble roller to wet out the mat until the fibers are no longer visible. Clean up excess resin from the edges with a squeegee and allow the mat ply to cure. Apply more catalyzed resin and another

ply of mat. Follow the subsequent steps shown in figure 6.19 until the laminate is complete. Note that the laminate is applied in two ply steps, allowing cure time between steps. This prevents warping and premature release of the mold from the plug and ensures a transfer of the plug shape to the mold.

The mold thickness should be built up to approximately 5/16 inch when complete. If necessary, the mold may be reinforced using plywood stiffeners secured to the mold with strips of mat.

12.9 After the mold has cured, remove it from the surface of the parent plug by tapping with a rubber mallet, wedging the edges with wooden wedges, or by washing away the release agent with a water hose.

12.10 Wash the mold surface with clear water to remove PVA and inspect for pinholes or imperfections. If required, patch the surface with filled resin and sand smooth.

After any required patching is complete, trim the edges of the mold with a saw and apply at least three coats of release wax, polishing between applications. When the waxing is complete, apply the PVA release agent as outlined in section 12.6.

12.11 The mold may now be used to prepare a backing plate or to laminate a replacement section of laminate for use in the repairs described in section 5.0 of this chapter.

13.0 **REPAIRS WITH NON-GLASS REINFORCEMENTS**

There are reinforcing fibers other than glass fiber which have been used in the construction of Navy FRP craft. Permanent repairs should be made using the same materials as in the original laminate. However, temporary repairs may be made using glass fiber reinforcement, with the temporary repair being removed and permanent repairs made as soon as possible.

13.1 **Kevlar**

Kevlar fiber is available in a variety of forms of directional reinforcement suitable for use in lamination. Kevlar is generally used in Navy FRP craft only where its light weight and damage tolerance are sufficiently valuable to justify its high cost. This results in Kevlar being used in a very limited number of craft, primarily in high speed, weight-critical combatants.

Repair of Kevlar laminates is difficult due to the toughness of the fiber. When cut or abraded, it tends to produce a ragged, fuzzy cut line with poor bonding characteristics, and rapidly dulls tools. For this reason, it is recommended that tools specifically recommended for cutting Kevlar fiber and Kevlar laminates be used to produce clean cuts. Kevlar fabrics should be cut with frequently sharpened heavy duty industrial shears or ceramic-edged cutting tools. Kevlar laminates should be cut with carbide tipped tools and abrasives.

Because of the difficulty in working with Kevlar, it is recommended that temporary or emergency repairs, if required, be made with glass fiber reinforcements. Since a damaged Kevlar laminate retains much of its integrity due to the toughness of the fiber and the manner in which Kevlar fibers an, temporary or emergency repairs may in some circumstances consist of applying a glass fiber patch to maintain the watertight integrity of the laminate. It is recommended that permanent repairs to Kevlar laminates be performed only by facilities having experience in such repairs.

13.2 **Carbon Fiber**

Carbon fiber is generally used only in parts of Navy FRP craft requiring high stiffness and strength and light weight. Because carbon fiber is fairly brittle, it is not used in areas subject to high impact. Carbon fiber is also expensive, and so is used only where the benefits of improved stiffness and strength and reduced weight as compared to glass fiber reinforcement are important enough to justify the cost. Typical applications include hatches on high speed combatants.

Carbon fiber does not present special handling difficulties, and may be cut with the same tools used to cut glass fiber reinforcements and laminates. However, its black color makes lamination more difficult, since trapped air and voids in the laminate cannot be seen during lamination as with glass fiber reinforcement. Carbon fiber laminates are generally very highly stressed to take advantage of their strength properties, so repairs must be conducted very carefully to avoid failures of the bond between the patch and the original laminate. It is recommended that permanent repairs to carbon fiber laminates be performed only by facilities having experience in such repairs.

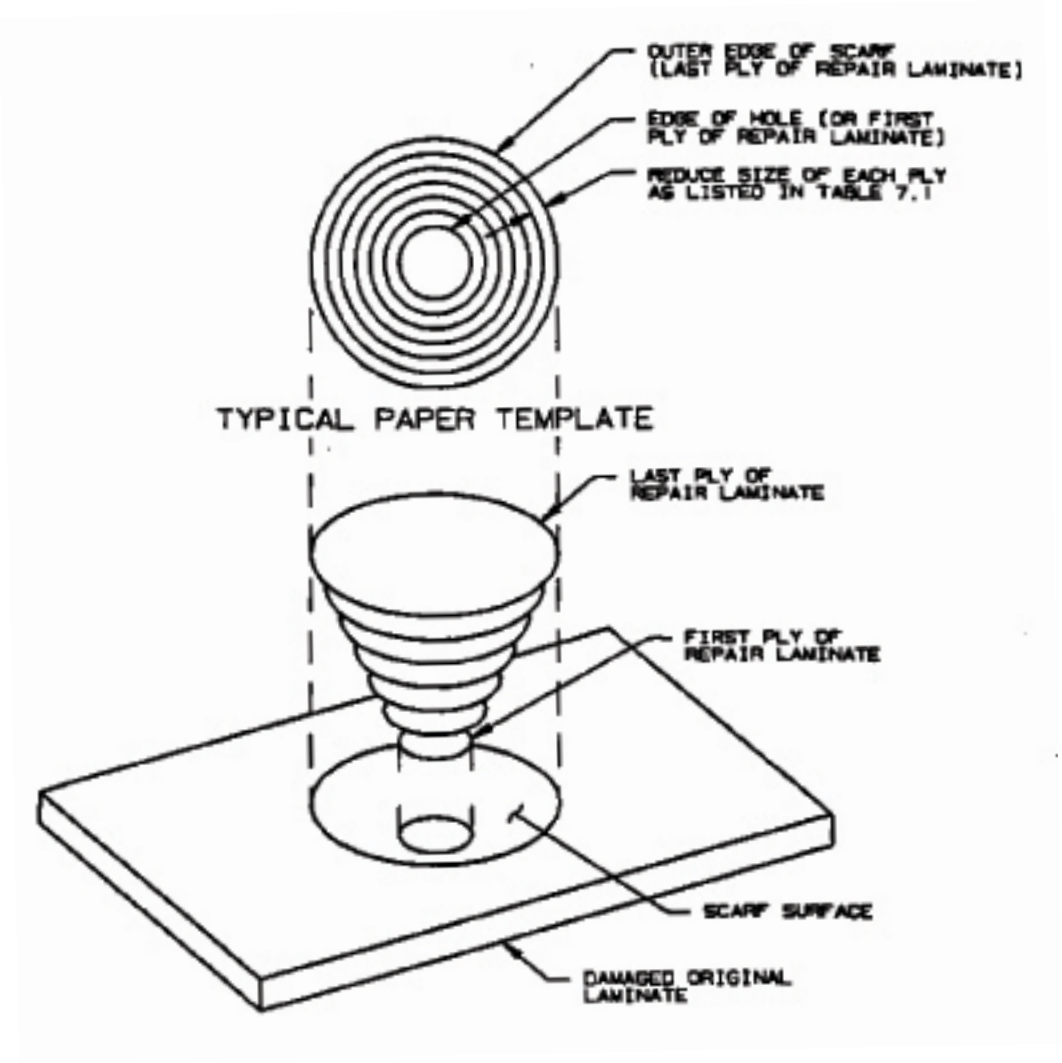

TEMPLATE FOR CUTTING REINFORCEMENT

FIGURE 6.1

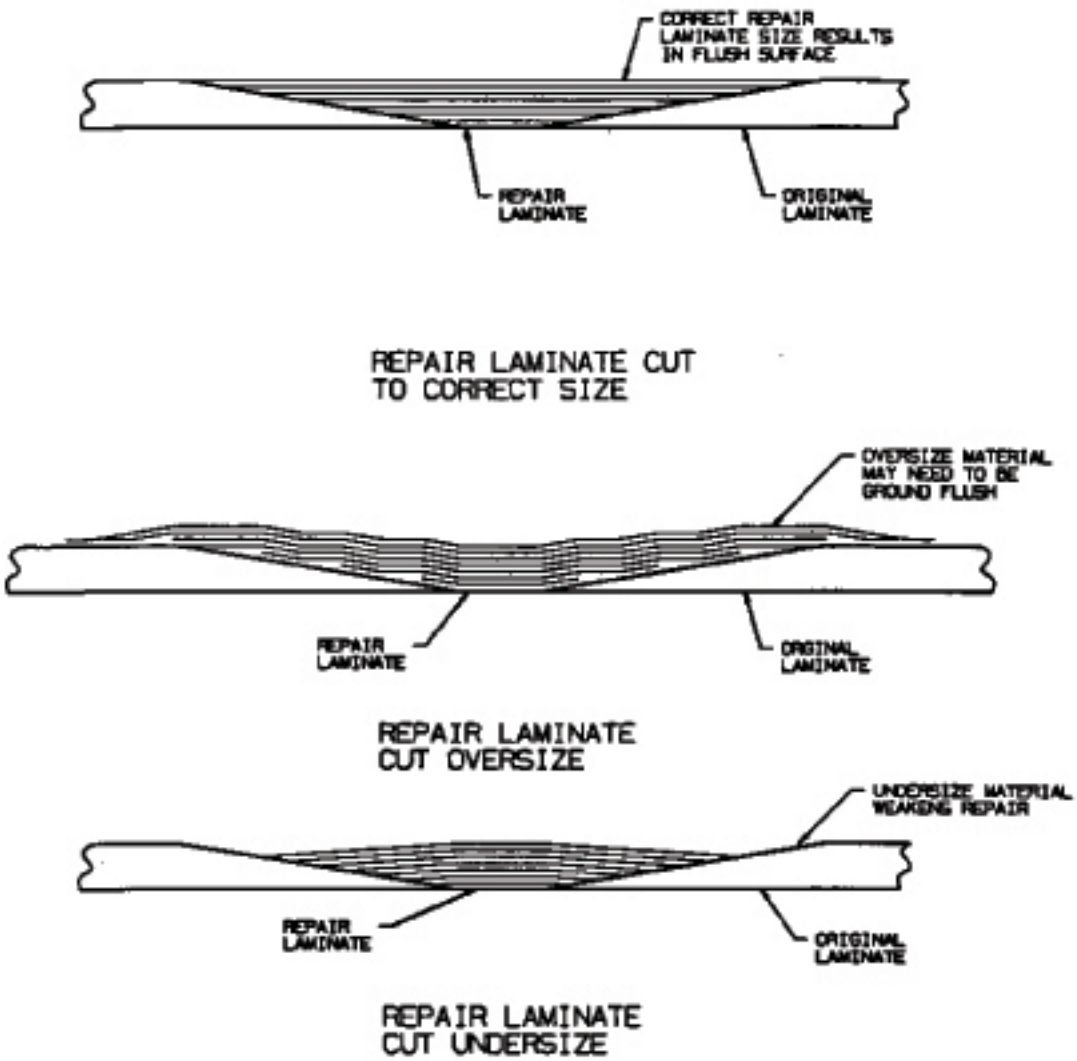

EFFECT OF OVERSIZE AND UNDERSIZE REPAIR LAMINATE REINFORCEMENT

FIGURE 6.2

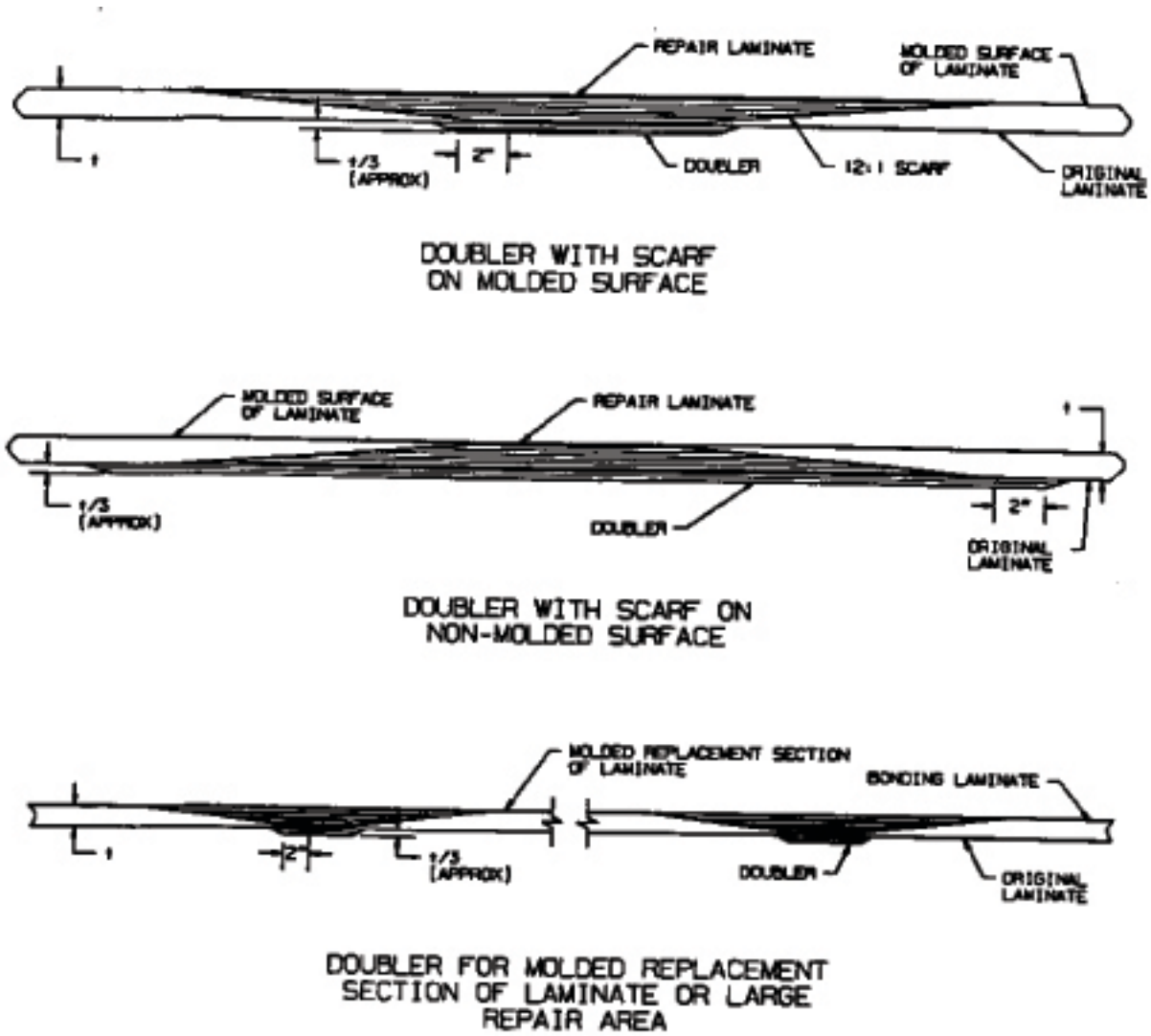

TYPICAL DOUBLERS

FIGURE 6.3

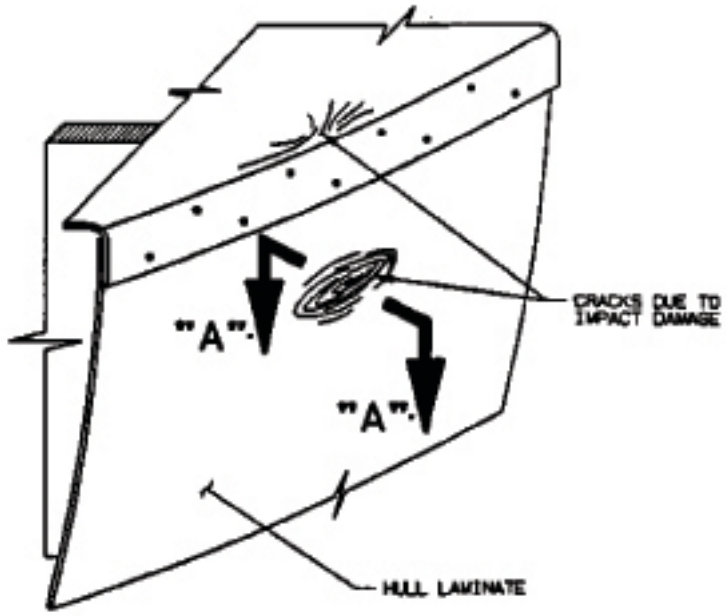

IMPACT DAMAGE SURFACE

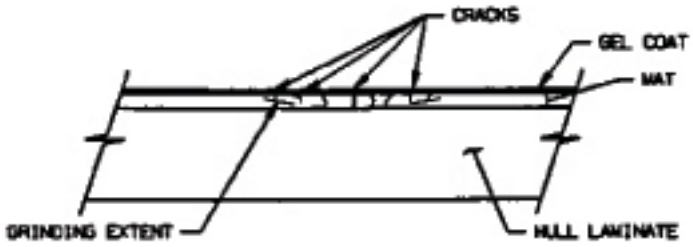

SECTION "A-A"
SECTION THROUGH DAMAGED AREA

SURFACE CRACKS AND CRAZING

FIGURE 6.4

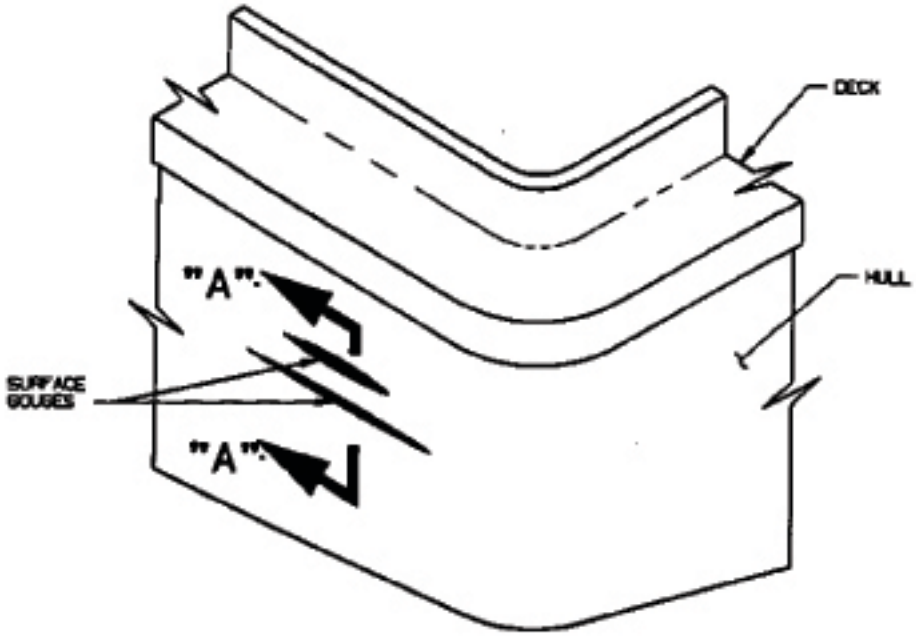

TYPICAL SURFACE ABRASION DAMAGE

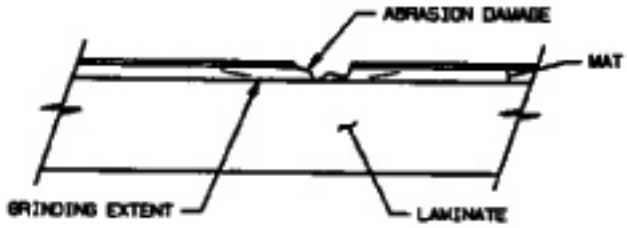

SECTION "A-A"
SECTION THROUGH ABRASION DAMAGE

SURFACE ABRASION DAMAGE

FIGURE 6.5

REPAIR OF DAMAGE TO ONE SIDE OF A LAMINATE

FIGURE 6.6

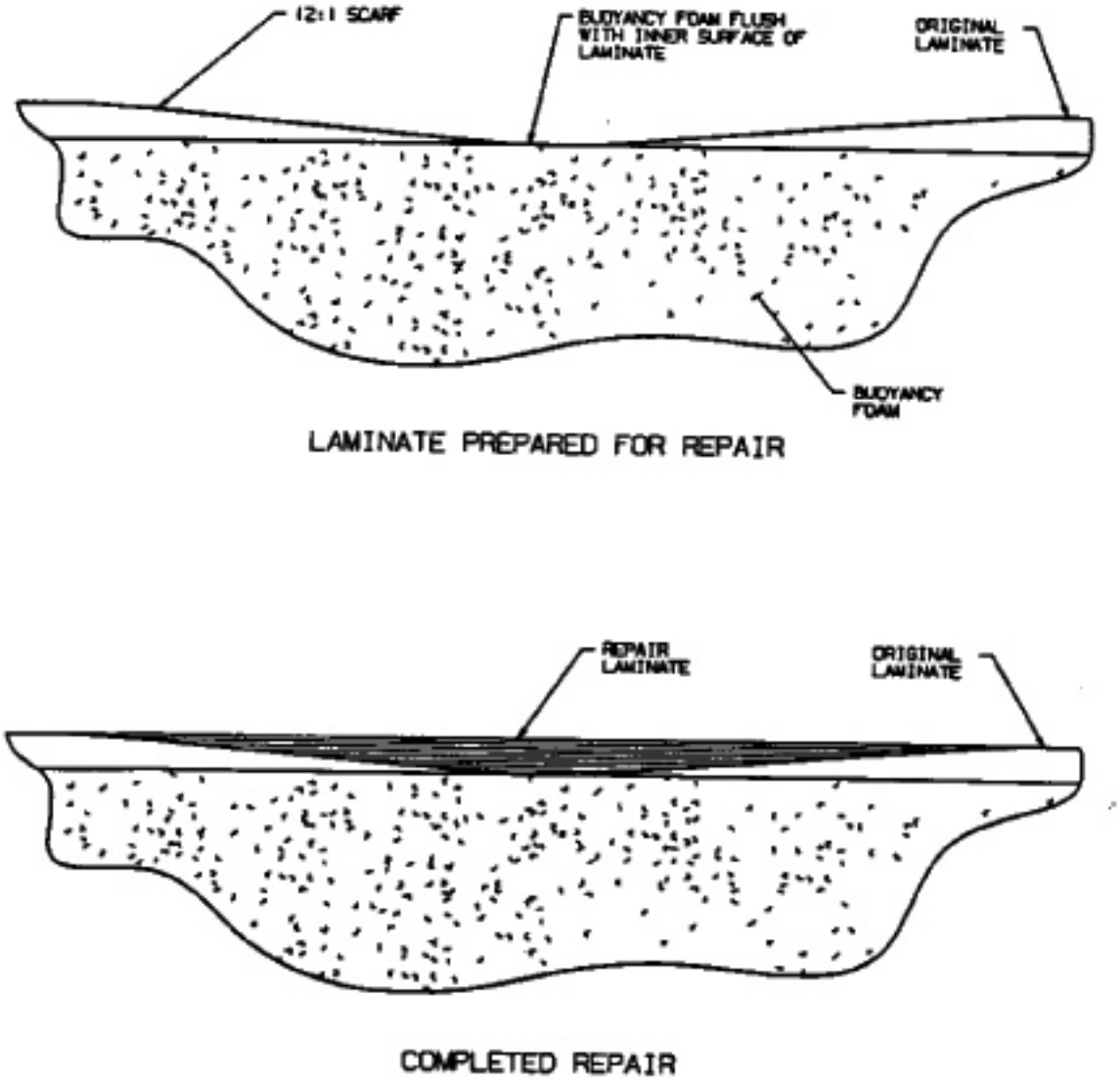

LAMINATING A REPAIR ON BUOYANCY FOAM

FIGURE 6.7

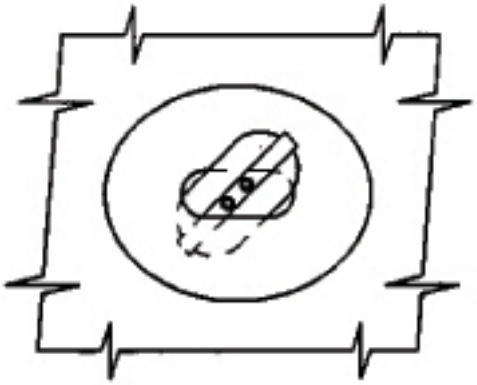

INSERTING BACKING PLATE

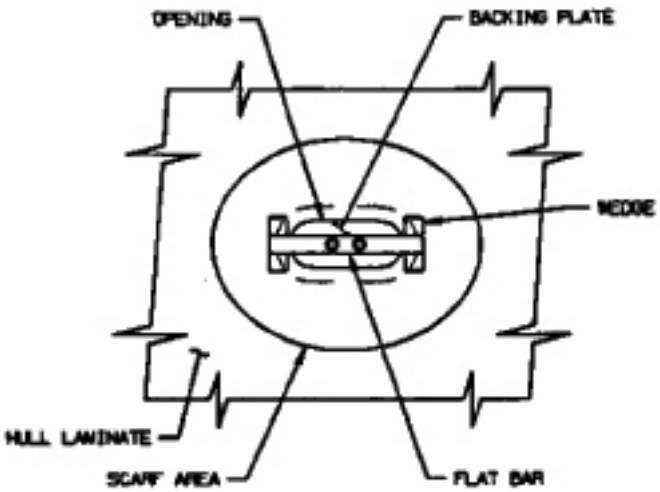

BACKING PLATE IN PLACE

BACKING PLATE FOR REPAIR WITH ACCESS FROM ONE SIDE

FIGURE 6.8 BACKING PLATE

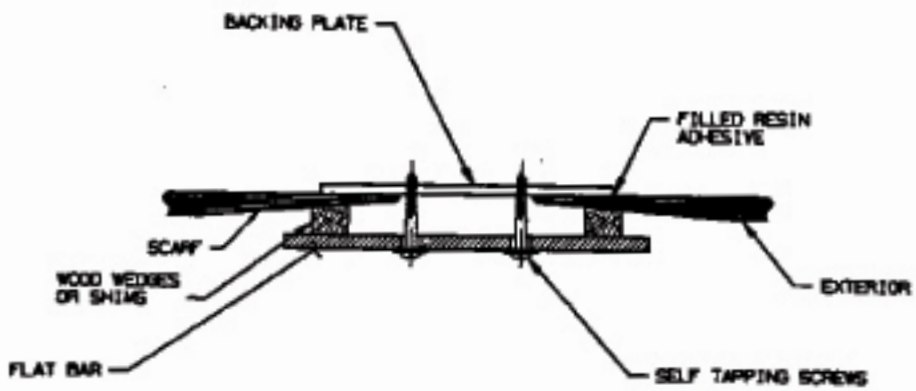

BACKING PLATE TEMPORARILY HELD IN PLACE WITH SELF-TAPPING SCREWS

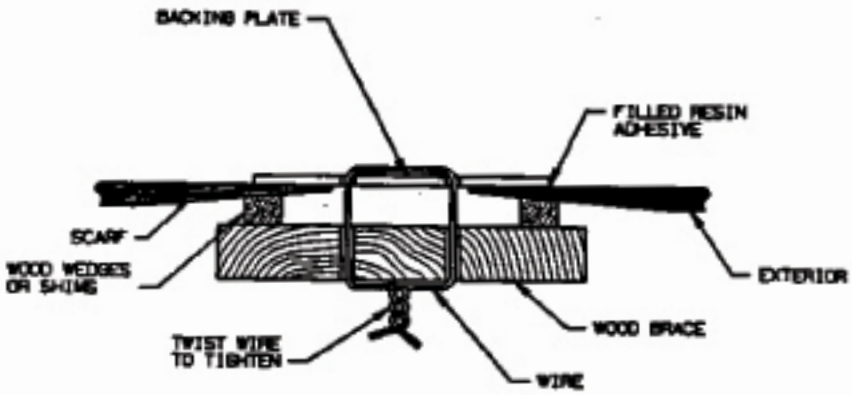

BACKING PLATE TEMPORARILY HELD IN PLACE WITH TWISTED WIRE

SUGGESTED METHODS OF SECURING SACKING PLATE

FIGURE 6.9

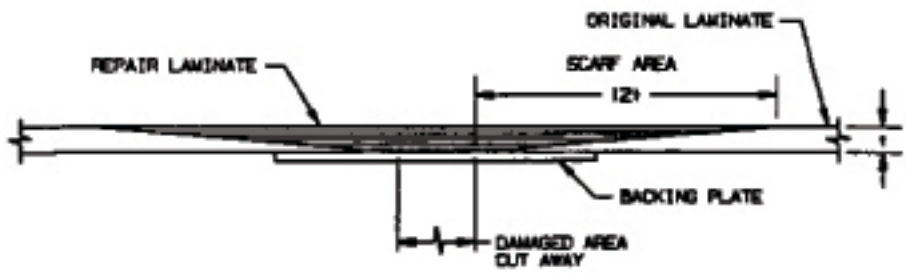

COMPLETED REPAIR OF DAMAGE
WITH ACCESS FROM ONE SIDE

SINGLE SKIN REPAIR WITH ACCESS FROM ONE SIDE

FIGURE 6.10

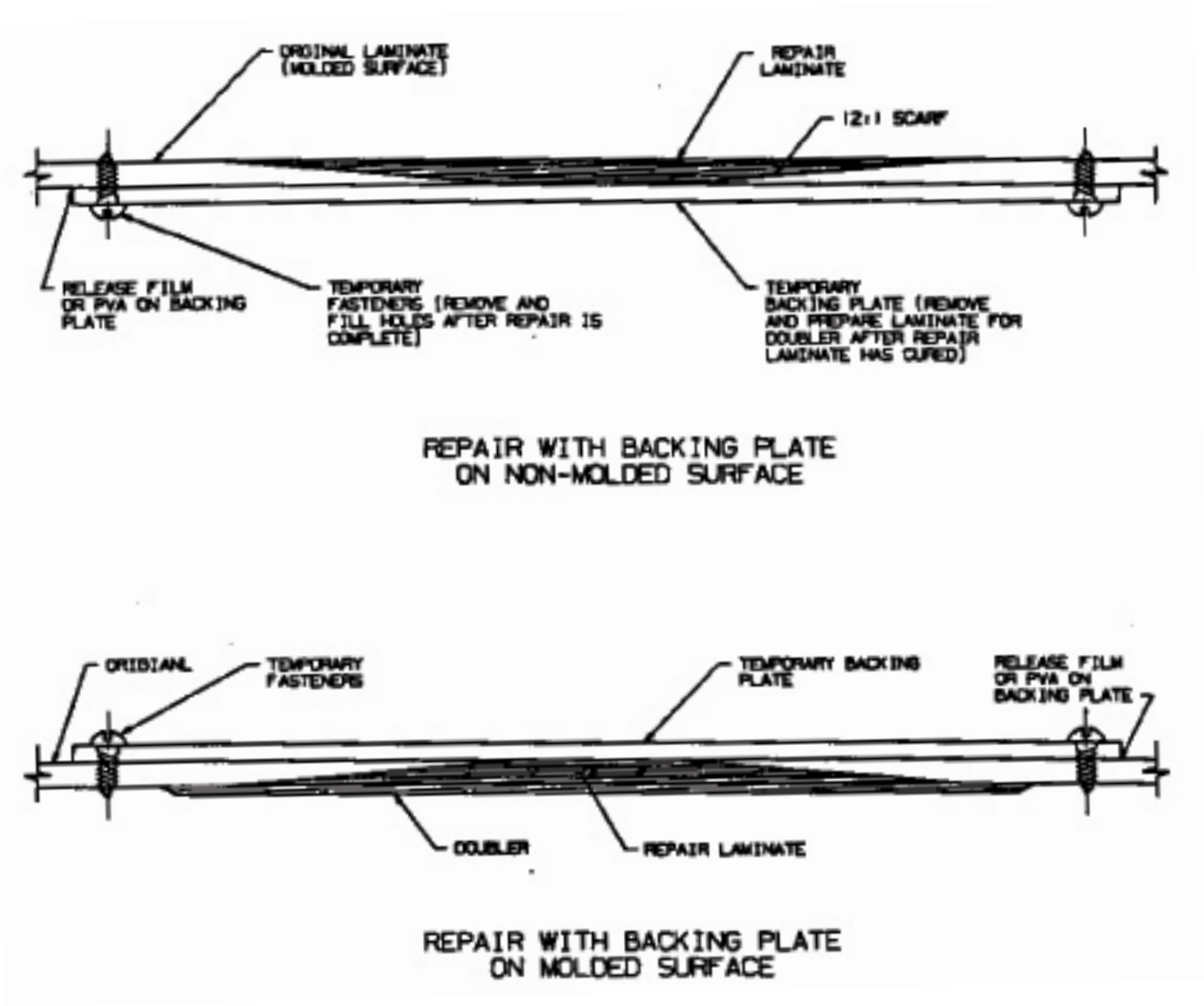

REPAIR OF SINGLE SKIN LAMINATE WITH ACCESS FROM BOTH SIDES

FIGURE 6.11

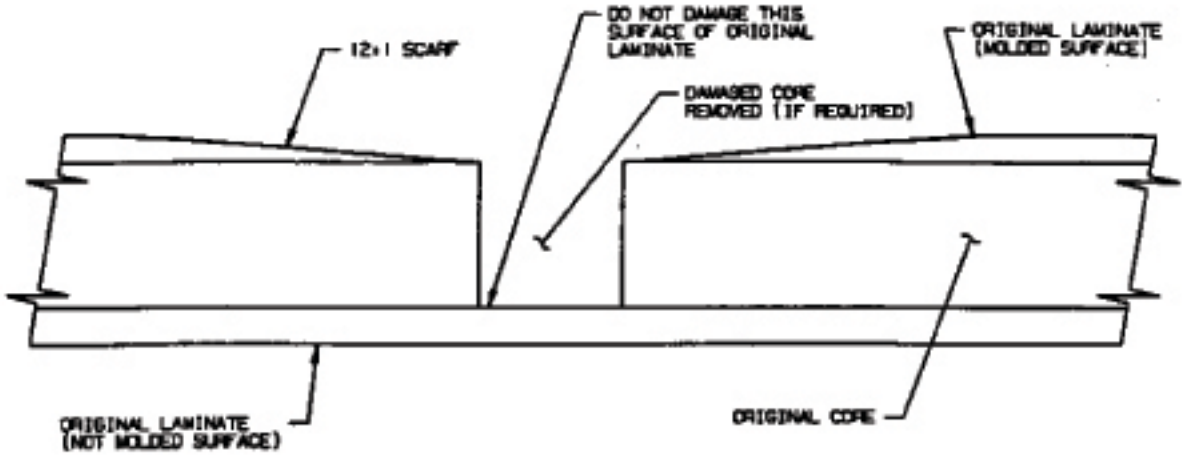

LAMINATE PREPARED FOR REPAIR

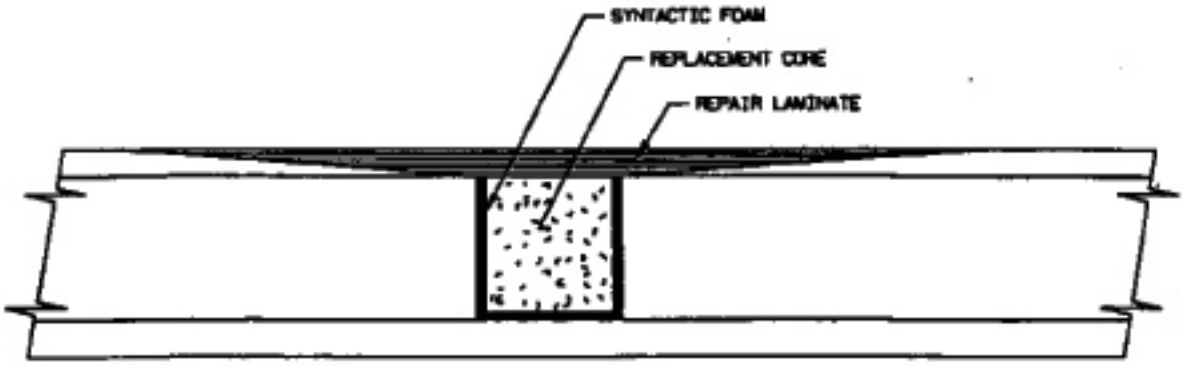

COMPLETED REPAIR

(NOTE: IF REPAIR IS TO NON MOLDED SURFACE, ADD DOUBLER TO REPAIR LAMINATE SIMILAR TO FIGURE 7.14)

REPAIR OF DAMAGE THROUGH ONE SKIN OF A CORED LAMINATE

FIGURE 6.12

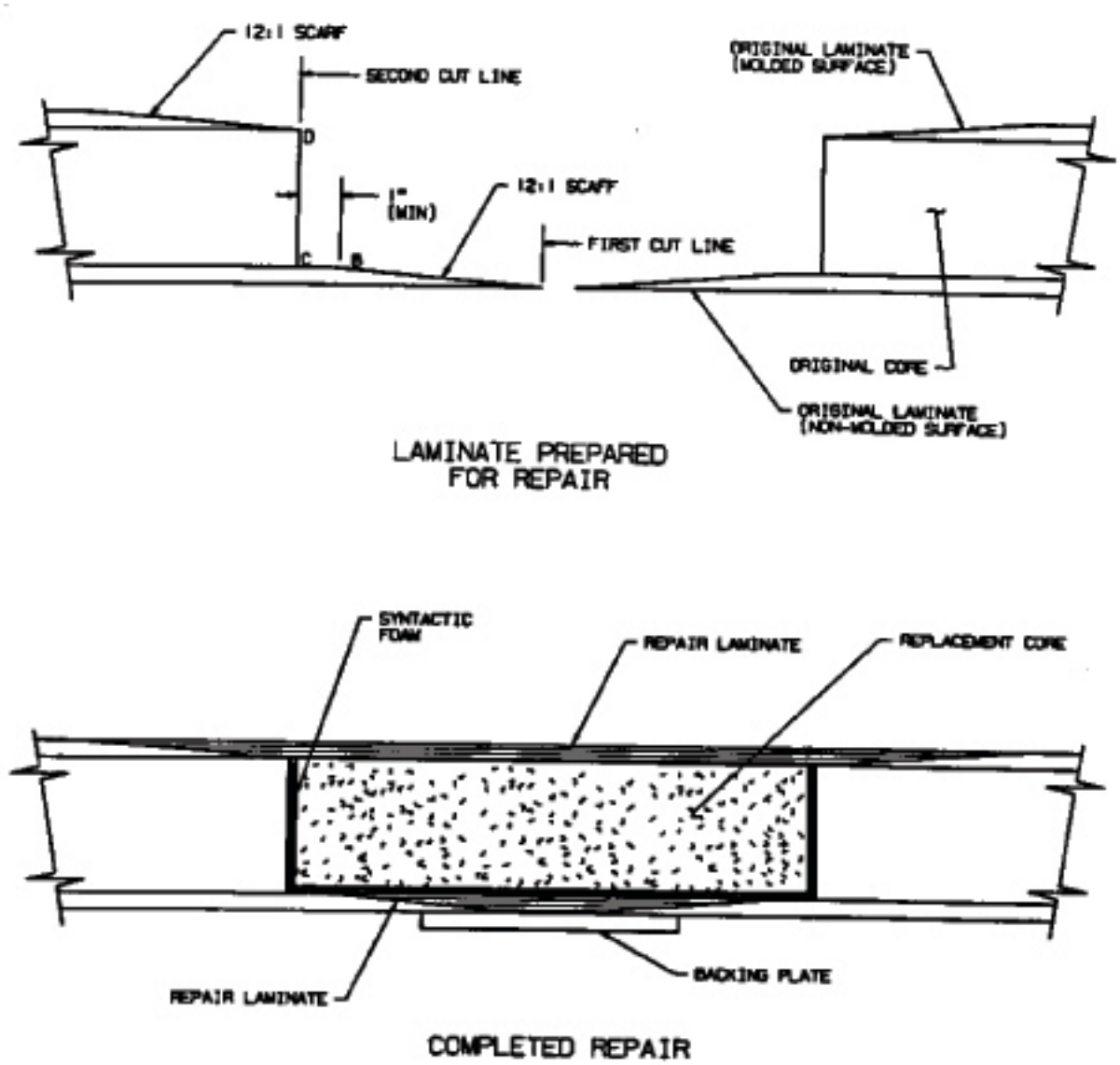

REPAIR OF DAMAGE THROUGH A CORED LAMINATE WITH ACCESS FROM ONE SIDE

FIGURE 6.13

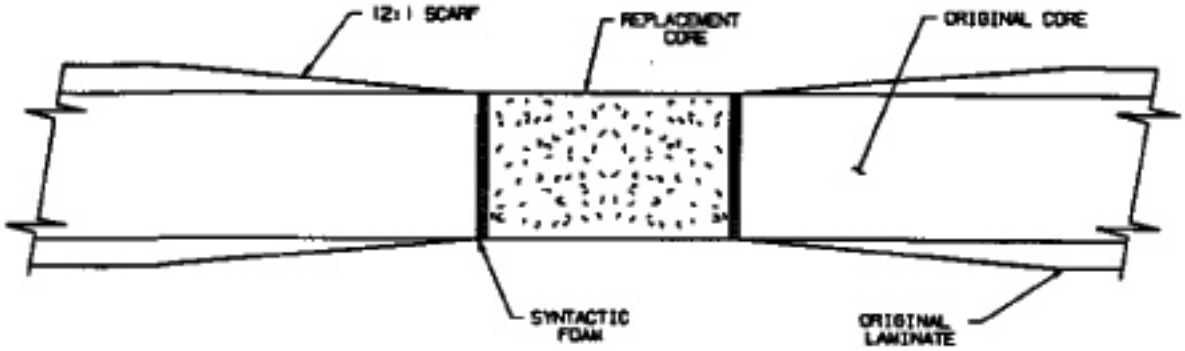

LAMINATE PREPARED FOR REPAIR

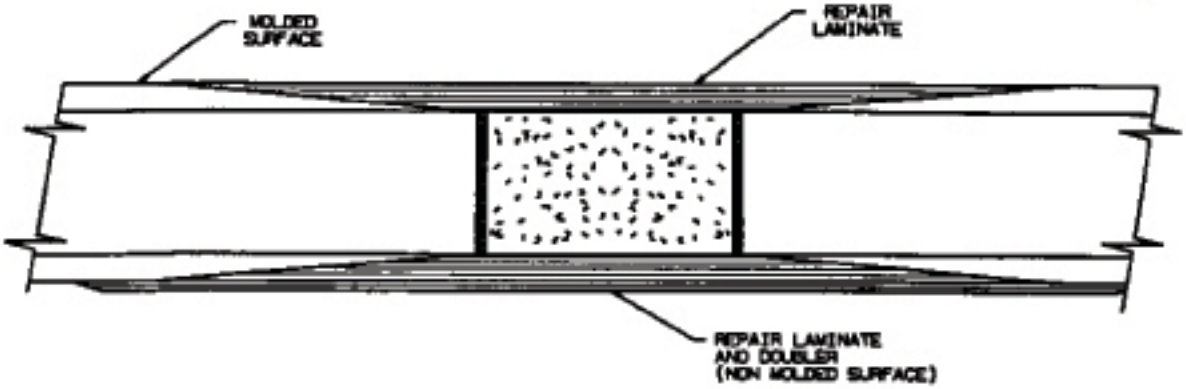

COMPLETED REPAIR

REPAIR OF DAMAGE THROUGH A CORED LAMINATE WITH ACCESS FROM BOTH SIDES

FIGURE 6.14

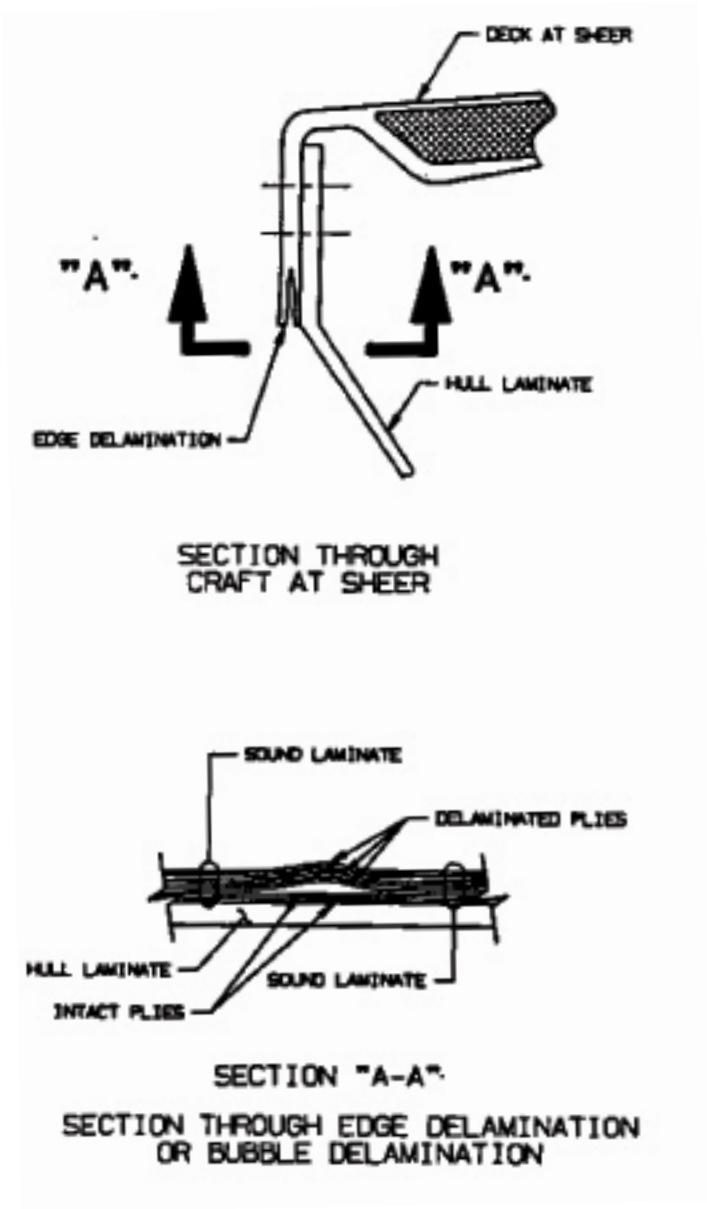

EDGE AND BUBBLE DELAMINATION

FIGURE 6. 15

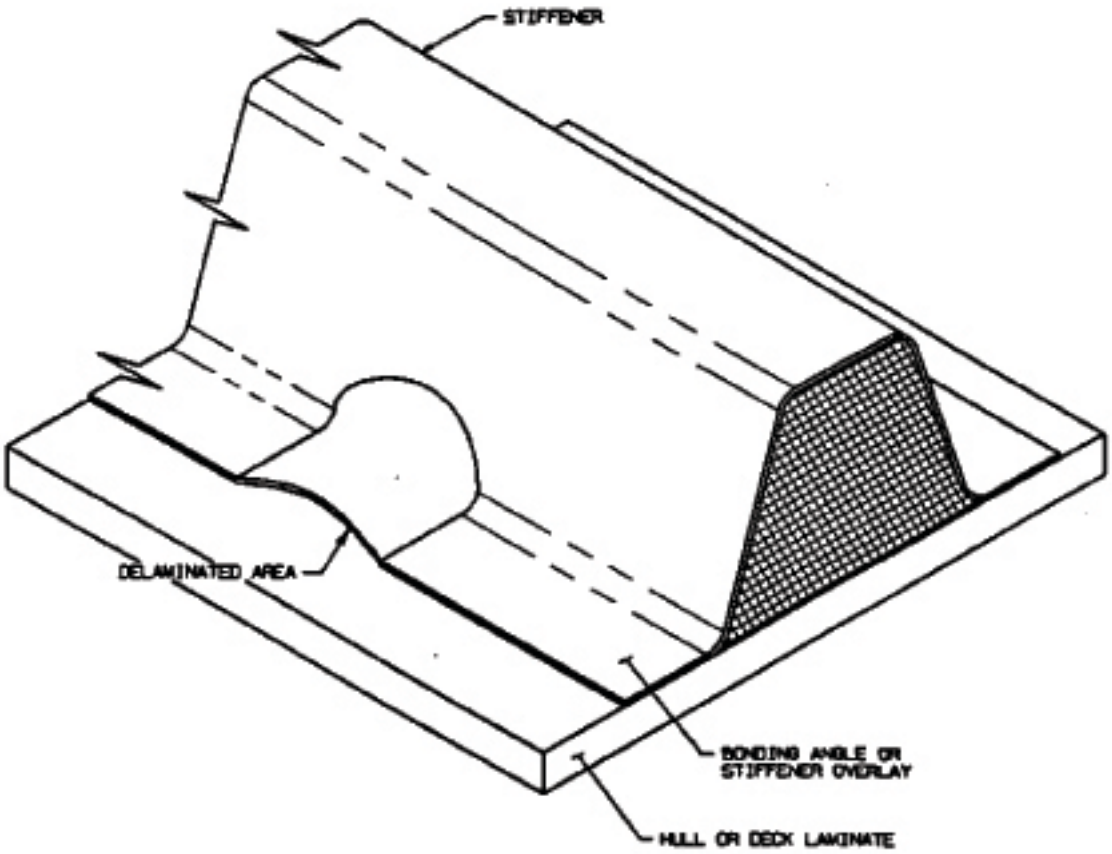

BONDING ANGLE AND STIFFENER DELAMINATION

FIGURE 6-16

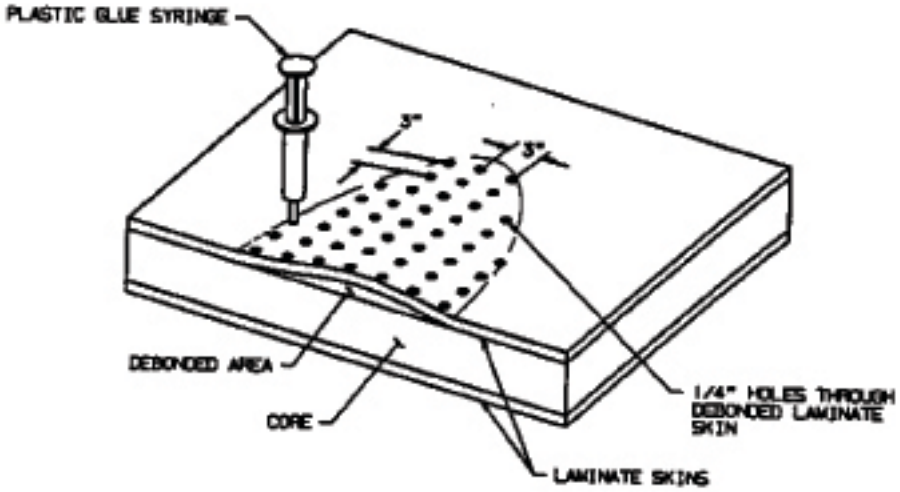

DEBONDED LAMINATE WITH HOLES DRILLED FOR RESIN INJECTION

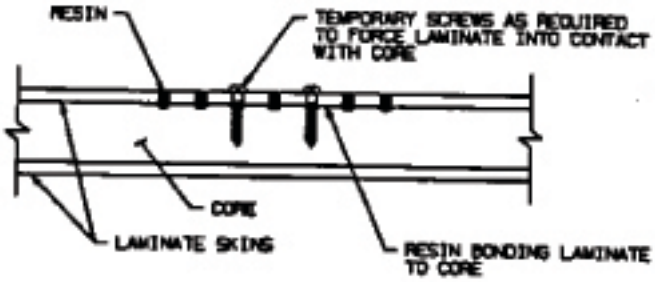

DEBOND REPAIR TEMPORARILY SECURED WITH SELF TAPPING SCREWS

CORE DEBOND REPAIR

FIGURE 6.17

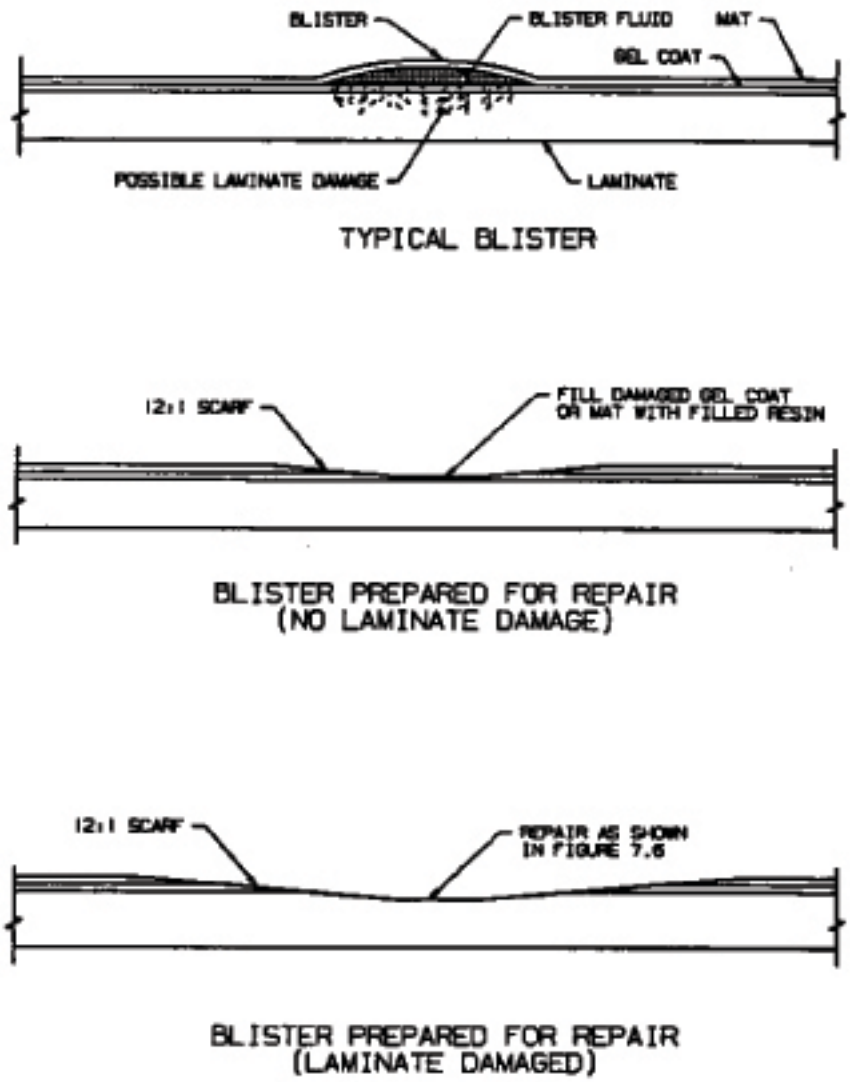

REPAIR OF BLISTERS

FIGURE 6.18

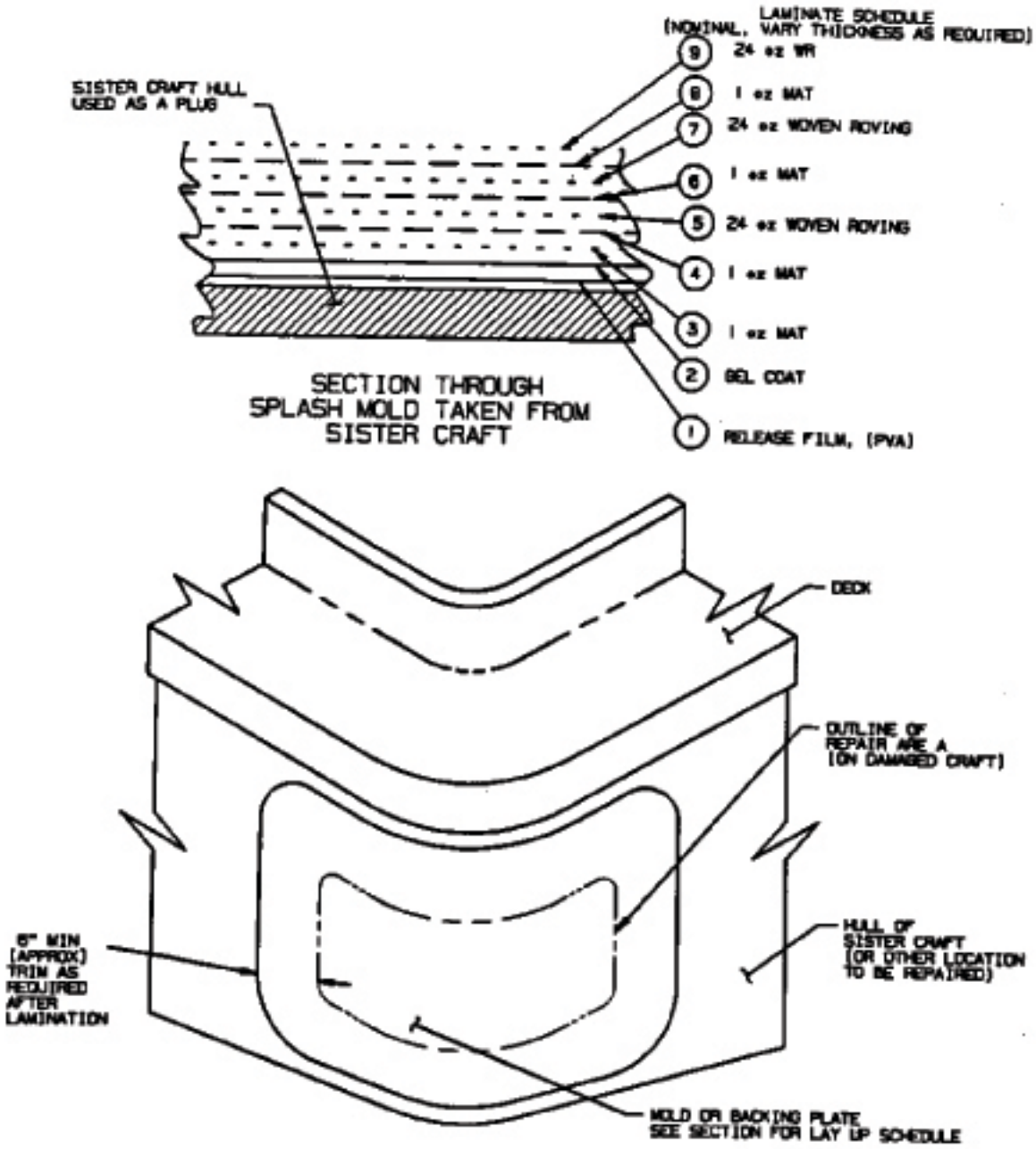

LAMINATING MOLD OR BACKING PLATE ON SISTER CRAFT

FIGURE 6.19