MILLER CONSTRUCTION, INC.

P.O. BOX 86 ASCUTNEY BLVD WINDSOR, VERMONT 05089-0086

TELEPHONE (802) 674-5525 / FAX (802) 674-5245

TRANSMITTAL

TO: Jennifer Fitch, PE Project Manager Vermont Agency of Transportation	DATE	PROJECT NO.
	5/16/2014	Brookfield BRF FLBR (2)

XX WE ENCLOSE THE FOLLOWING: _____ UNDER SEPARATE COVER WE ARE SENDING THE FOLLOWING

COPIES	NUMBER	DESCRIPTION	CODE
1		Revision List	H
1		FRP Design Computations - Rev 3	H
1		FRP Design Drawings - Rev 3	H
1		Planned Deviations for Conceptual Design - Rev 3	H
1		Fabricator Qualifications	H

CODE:

A FOR INITIAL APPROVAL
B FOR FINAL APPROVAL
C APPROVED AS NOTED-RESUBMISSION REQUIRED
D APPROVED AS NOTED-RESUBMISSION NOT REQUIRED
E DISAPPROVED-RESUBMIT
F QUOTATION REQUESTED
G APPROVED
H FOR APPROVAL
I AS REQUESTED OR REQUIRED
J FOR USE IN ERECTION
K LETTER FOLLOWS
L FOR FIELD CHECK
M FOR YOUR USE

BY: Paul J Allen

FRP Raft Pontoons – Supporting Comps

For

Brookfield Floating Bridge

In

Brookfield, Vermont

CEE 050-br-14 Vtrans BLF – FLBR(2)

Prepared for:

Miller Construction, Inc

By:
Kenway Corporation
April 18th, 2014
Rev. 2 May 9th 2014
Rev 3 May 15th, 2014

Rev 3 Changes *Page no. from "Brookfield BRF FLBR(2) FRP Design Comp Dwg Sub (R and R) 5-14-14.pdf"

Item	Review Page*	Rev 3 Page	Description
1	12,13	16-18 20,26	Updated calculations to incorporate revised area, centroid and inertia

Rev 2 Changes *Page no. from "Brookfield BRF FLBR(2) FRP Design Comp Dwg Sub (R and R) 5-6-14.pdf"

Item	Review Page*	Rev 2 Page	Description
1	2	2	Updated calculation cover sheet with current revision and date
2	11	12,13	Recomputed area, centroid, inertia, and stiffness calculations and provided detailed calculations; new values entered throughout
3	12	14	Spray-in foam is adhered to bottom plate and will provide stiffness in tension and compression - modulus is the same in either direction
4	16	14	Preliminary test data from UMaine indicates pin bearing strength is greater than 52 ksi - F_{br} is changed to 52 x 0.85 = 44.2 ksi for design; new value entered throughout; results summary provided
5	18	19-22	Removed C_T (temp factor) from calculations (per special provision)
6	21	24	Corrected resistance factor for permanent load = 0.40 (3 places)
7	21	24 56,58	Added shear strength and compressive strength check of MMA between blister and pontoon; added MA560 test report; increased blister to 8-1/8 x 8-1/8
8	22	25 47-55	Checked forces in FRP plate using a beam on elastic foundation model (spreadsheet attached); added data sheet for actual foam and excerpt from paper with more properties of PU foam (this foam was 1.6 pcf, which has lower modulus and strength than the 2 pcf foam to be used in pontoons); changed λ to 1.0 and did not use ϕ (per special provision) since ice load is extreme event
9	42	61	Fixed text box size to show missing text (1.7")

Rev 1 Changes *Page no. from "Brookfield BRF FLBR(2) FRP Design Comp (R and R) 04-24-14.pdf"

Item	Review Page*	Rev 1 Page	Description
1	3	9	Printed VectorLam output screen for each ply plus 1/2" typical laminate and 1" thick bolt area laminate
2	3	7,9	Actual thickness values per ply were computed from test laminates made at Kenway using the specified fabric and resin; per ply thickness is affected by nesting of adjacent plies and actual resin content
3	3	7,9	C-veil ply has been added to effective laminate properties
4	3	7,9	Layup and strength properties have been added for 1" thick bolt areas
5	3	8	Changed fiber weight fraction to fiber volume fraction
6	3	8	Added resin additives to laminate description
7	4	10	Component thickness and density updated to match actual values
8	4	10	Item numbers in table changed to match numbers in drawing
9	4	10	Missing components and hardware added to weight table
10	4	10	Exact volumes calculated in SolidWorks used in weight table
11	5	11	Raft section properties recalculated - stiffeners and angle included (although the stiffeners are not continuous end to end)
12	5	11	Added dimensions and fixed thickness dimension
13	6	7	Reduced nominal strength and stiffness values listed in "Predicted Material Properties" table by moisture reduction factor (CM times values from VectorLam)
14	6	18-20	Added calculations to check loads on webs at end of end rafts
15	6	12	Corrected section moment of inertia - was 48,086; is 93,975 - and distance to centroid - was 19.3; is 18.8
16	6	12	Evaluated buckling of bottom plate by considering a strip of FRP like a beam on an elastic foundation since the foam is bonded to the plate
17	6	12	Corrected the use of overall depth (force couple) and used the distance from the centroid to the plate midplane (average stress)

18	6	13	Corrected vertical bending moment value; changed k_{cr} to 1.1 (closer to pin connection); corrected Poisson's ratio - was 0.17, is 0.20;
19	7	13	Corrected section moment of inertia - was 48,086; is 93,975 - and distance to centroid - was 19.3; is 17.16
20	7	13,14	Corrected width of top plate in two places - was 22, is 23
21	7	13	Corrected the use of overall depth (force couple) and used the distance from the centroid to the plate midplane (average stress)
22	7	14	Corrected shear value for adhesive strength
23	7	14	Since most strength resistance factors used in the bolted connections section of the pultruded LRFD manual use $\phi = 0.5$, this factor has been used for the top plate midspan adhesive joint
24	8	14	Updated Poisson's ratio and other laminate properties
25	9	15	Updated Poisson's ratio and other laminate properties; changed k_{cr} to 1.1 (closer to pin connection)
26	9	16	Corrected shear strength of adhesive and changed resistance factor to 0.5, which is consistent with Item 24 above
27	10	16	Changed hole diameter for pin bearing to actual bolt diameter; changed laminate thickness to match VectorLam sheet
28	10	17	Corrected "w" to account for overlap in failure planes with adjacent bolts; corrected g/d; corrected Ru for comparison to 3 bolts
29	11	17	Updated plate thickness and shear strength to match VectorLam
30	11	17	Changed web thickness to 1.017 and hole diameter to actual bolt size; (the reason for a web thickness of 0.65 was to determine the minimum thickness required to pass bearing strength requirements)
31	11	18	Added a check of the web bolts for net tension failure using the equations for loading 5-90 degrees from longitudinal
32	11	18-20	Added checks for bolt loading at stainless steel end connections including transverse loading on webs in line with HSS shelf (5.4.5)
33	12	21	Corrected effective (loaded) area of FRP blister by removing the area of the hole from the area of the steel plate - was 36, is 34.23; updated laminate material properties

34	13	22	Added check of plate bending between bulkheads due to ice load
35	19	8,29-34	Included additive information with "Laminate Composition" and attached applicable data sheets; additives are being added by the resin supplier
36	20	37	The pontoon shown on Sheet 1 is labeled in the title block as "Standard Pontoon", which is why the length of 161" was not shown; a note has been added to identify this length for end of end pontoons
37	20	37	Lines on iso view denote the start and end of the radius - they do not indicate a joint - the hull is continuous from top edge to top edge
38	20	37	Process description for roughing the mating surface will be provided with fabrication drawing submittal
39	21	38	Lines on iso view denote the start and end of the radius - they do not indicate a joint - the hull is continuous from top edge to top edge
40	21	35,36	Pultruded angle technical data provided along with other data sheets
41	21	38	Added length of plate stiffeners
42	22	39	When top plate is bonded, the mating edge will be set from 0"-1/16" back from the exterior bulkhead
43	22	39	Added note indicating blister to be bonded with 1/8" MMA
44	22	39	Added fillets to interior and exterior edges (these details were going to be shown on the fabrication drawings)
45	23	35,36	Pultruded tube technical data provided along with other data sheets
46	23	n/a	Glue thickness will be controlled using a combination of hard stops between parts and/or various jigs and fixtures; a specified diameter bead of MMA will be placed along the centerline of the joint, which will spread and flatten uniformly under the flange avoiding entrapped air - squeeze out will confirm full contact
47	23	10,11	Pultruded angle weight and stiffness has been included in calculations
48	23	40	The 4" thick foam core in the stiffener will be shaped from rigid 2" thick PET foam; stiffener has been included in weight and stiffness calculations; stiffener is infused with plate

49	23	n/a	Foam in the hull will either be sprayed around a temporary bond-out or a template will be used to mark and monitor carving out the foam to prevent interference with the top plate
50	24	41	Overall length and plate thickness dimensions added to end raft
51	25	42	Upper text box expanded to show missing text; clarification: all plies in hull and bulkheads will be continuous in the longitudinal (primary stress) direction; the following references specify fabric overlaps of either 1-1.5 in. (Composite Airframe Structures, Ch. 4, p. 195) or 30 times the ply thickness (MIL-HDBK-17-3F, Composite Materials Handbook, Volume 3), which in this case is 30 x 0.057 = 1.7 in.; Kenway requests an overlap of 2 in. be accepted
52	25	n/a	Responses in April 15 email are noted
53	25	n/a	FRP shim plates accepted
54	26	n/a	Not intended for data submittal; only intended to show compressive strength of infused laminates with a balanced layup is very similar to tensile strength; the low predicted compressive strength from VectorLam is used in calulations, but test data is expected to show a considerably higher value; report deleted from submittal

Predicted Material Properties for Pontoon Laminate

$^1C_M = 0.95$ $^2C_M = 0.85$

Fabric	Architecture	Areal Wt. (oz/yd^2)	E_x (=E_y)[1] (Msi)	F_{tu}[2] (ksi)	F_{cu}[2] (ksi)	G[1] (Msi)	F_{su}[2] (ksi)
C33-veil	glass veil	0.09	1.46	24.23	31.88	0.55	11.99
Biaxial	0/90 no mat	54	3.41	48.96	32.64	0.51	9.10
Bias	±45 w/mat	48	1.62	23.72	32.98	1.33	27.03
1/2"	$[V][0/90]_7[\pm45]_2$	474	3.11	44.46	29.67	0.67	12.16
1"	$[V][0/90]_{14}[\pm45]_4$	948	3.11	44.54	29.67	0.67	12.16

Nominal 1/2" Thk

Ply	Description	Roll Dir.	Ply Thk (in)	Total Thk (in)
10	4008 double bias	0	0.053	**0.509**
9	5400 biaxial	0	0.057	0.456
8	5400 biaxial	0	0.057	0.399
7	5400 biaxial	0	0.057	0.342
6	5400 biaxial	0	0.057	0.285
5	5400 biaxial	0	0.057	0.227
4	5400 biaxial	0	0.057	0.170
3	5400 biaxial	0	0.057	0.113
2	4008 double bias	0	0.053	0.056
1	C-veil (against mold)	0	0.002	0.002

Nominal 1" Thk

Ply	Description	Roll Dir.	Ply Thk (in)	Total Thk (in)
19	4008 double bias	0	0.053	**1.017**
18	5400 biaxial	0	0.057	0.963
17	5400 biaxial	0	0.057	0.906
16	5400 biaxial	0	0.057	0.849
15	5400 biaxial	0	0.057	0.792
14	5400 biaxial	0	0.057	0.734
13	5400 biaxial	0	0.057	0.677
12	5400 biaxial	0	0.057	0.620
11	4008 double bias	0	0.053	0.563
10	4008 double bias	0	0.053	0.510
9	5400 biaxial	0	0.057	0.456
8	5400 biaxial	0	0.057	0.399
7	5400 biaxial	0	0.057	0.342
6	5400 biaxial	0	0.057	0.285
5	5400 biaxial	0	0.057	0.227
4	5400 biaxial	0	0.057	0.170
3	5400 biaxial	0	0.057	0.113
2	4008 double bias	0	0.053	0.056
1	C-veil (against mold)	0	0.002	0.002

Laminate Compostion

Item	Description	Manufacturer	V_f (fiber)	Remarks
Resin	8100-50 vinyl ester	Interplastics	n/a	
UV Inhib.	Tinuvin 328	BASF	n/a	Added by supplier
Pigment	Fed Std Gray	Advance Coatings	n/a	Added by supplier
Promoter	Duroct Cobalt	DURA Chemicals	n/a	Added by supplier
Promoter	DMA (dimethylaniline)	Puritan Products	n/a	Added by supplier
Catalyst	NOROX MEKP 925H	Syrgis	n/a	
Fabric	54 oz 0/90 3D woven	TEAM	49.5%	
Fabric	48 oz ±45 stitched	FGI	48.0%	40 oz fabric plus 8 oz/yd^2 csm
Fabric	C-veil (glass)	PPG	24.0%	surfacing veil against mold
			49.1%	*laminate fiber fraction by vol.*

Infusion Process

A detailed diagram of the infusion process indicating placement of vacuum lines, release film, flow media, feed lines, etc. will be provided for each component as part of the fabrication drawings submittal. A general summary of the process to be utilized is described below.

All parts will be laid up in vacuum tight molds. A perimeter vac line broken up into multiple zones will be used to evacuate air from the part. The normal operating range of our vac system is 25–29" Hg. A layer of release film is placed over the entire part prior to placing the shade cloth, which acts as a flow medium for the resin between feed lines. Feed lines will be placed across the part every 16–18" starting at the center. After a drop test has been successfully performed, the center feed will be opened. Once the flow front is 3–6" past the adjacent feed line, the next feed line is opened until the part is full of resin. Vacuum lines are kept open until the part has gel'd and feed lines are kept open until the resin has gel'd in the bucket. A gel time of approximately 40–50 minutes is the target. Resin will be dispensed from a Magnum Venus Products (MVP) system, which mixes resin and catalyst at the desired ratio at the gun nozzle as it is dispensed.

Project : Pontoon Bridge **Date :** 28-Apr-14

Laminate Name : 1.0 Laminate VE 8190
Description : 1.0 Laminate
Number : 5 of 5

Laminate Rotation: 0

	ID	Lay-up, Top to Bottom Product	Fiber Content %	vol / wt	Top Up/Dn u/d/m/h	Rotation deg.	Fiber Wt. oz/sq.yd	Layer Thickness	Fiber lb/sq.ft	Resin lb/sq.ft	Total lb/sq.ft	Fiber $/lb	Fiber $/sq.ft	Resin $/sq.ft	Total $/sq.ft	Layer #
1.	OC	C-Glass veil - infused	40 %	Wt	Hom.	0	0.97	0.002	0.01	0.01	0.017	$ -	$ -	$ -	$ -	1
2.	Ve	E-BXM 4008 - infused	66 %	Wt	Hom.	0	48.24	0.053	0.34	0.17	0.506	$ -	$ -	$ -	$ -	2
3.	TE	54 oz 3D - infused	67 %	Wt	Hom.	0	54.00	0.057	0.38	0.18	0.556	$ -	$ -	$ -	$ -	3
4.	TE	54 oz 3D - infused	67 %	Wt	Hom.	0	54.00	0.057	0.38	0.18	0.556	$ -	$ -	$ -	$ -	4
5.	TE	54 oz 3D - infused	67 %	Wt	Hom.	0	54.00	0.057	0.38	0.18	0.556	$ -	$ -	$ -	$ -	5
6.	TE	54 oz 3D - infused	67 %	Wt	Hom.	0	54.00	0.057	0.38	0.18	0.556	$ -	$ -	$ -	$ -	6
7.	TE	54 oz 3D - infused	67 %	Wt	Hom.	0	54.00	0.057	0.38	0.18	0.556	$ -	$ -	$ -	$ -	7
8.	TE	54 oz 3D - infused	67 %	Wt	Hom.	0	54.00	0.057	0.38	0.18	0.556	$ -	$ -	$ -	$ -	8
9.	TE	54 oz 3D - infused	67 %	Wt	Hom.	0	54.00	0.057	0.38	0.18	0.556	$ -	$ -	$ -	$ -	9
10.	Ve	E-BXM 4008 - infused	66 %	Wt	Hom.	0	48.24	0.053	0.34	0.17	0.506	$ -	$ -	$ -	$ -	10
11.	Ve	E-BXM 4008 - infused	66 %	Wt	Hom.	0	48.24	0.053	0.34	0.17	0.506	$ -	$ -	$ -	$ -	11
12.	TE	54 oz 3D - infused	67 %	Wt	Hom.	0	54.00	0.057	0.38	0.18	0.556	$ -	$ -	$ -	$ -	12
13.	TE	54 oz 3D - infused	67 %	Wt	Hom.	0	54.00	0.057	0.38	0.18	0.556	$ -	$ -	$ -	$ -	13
14.	TE	54 oz 3D - infused	67 %	Wt	Hom.	0	54.00	0.057	0.38	0.18	0.556	$ -	$ -	$ -	$ -	14
15.	TE	54 oz 3D - infused	67 %	Wt	Hom.	0	54.00	0.057	0.38	0.18	0.556	$ -	$ -	$ -	$ -	15
16.	TE	54 oz 3D - infused	67 %	Wt	Hom.	0	54.00	0.057	0.38	0.18	0.556	$ -	$ -	$ -	$ -	16
17.	TE	54 oz 3D - infused	67 %	Wt	Hom.	0	54.00	0.057	0.38	0.18	0.556	$ -	$ -	$ -	$ -	17
18.	TE	54 oz 3D - infused	67 %	Wt	Hom.	0	54.00	0.057	0.38	0.18	0.556	$ -	$ -	$ -	$ -	18
19.	Ve	E-BXM 4008 - infused	66 %	Wt	Hom.	0	48.24	0.053	0.34	0.17	0.506	$ -	$ -	$ -	$ -	19
20.			-	Wt	Hom.	0	-	-	-	-	-	$ -	$ -	$ -	$ -	
						Laminate :	950.0	0.964	6.597	3.23	9.83	Lam :	$ -	$ -	$ -	19
						Core / Solids :	-	-	-			Core:	$-	$/lb :	$ -	
						Total :	950.0	1.017	6.597							

You can change the properties listed in this table by clicking on an existing name and selecting a property from

Layers

Adjustment

Laminate Comparison Table **Table Units:** **2**

Laminate # ->		1	2	3	4	5										
Laminate	3	0.5 Laminate	C-veil	54 oz 3D	4008	1.0 Laminate										
Thickness	145	0.509	0.002	0.057	0.053	1.017										in.
Mf	386	67.09 %	40.00 %	67.45 %	66.15 %	67.13 %										by Wt.
Density	139	115.9	94.9	116.3	115.1	116.0										lb/cu.ft
Fiber Wt.	136	3.30	0.01	0.38	0.34	6.60										lb/sq.ft
Resin Wt.	135	1.62	0.01	0.18	0.17	3.23										lb/sq.ft
Laminate Wt.	138	4.92	0.02	0.56	0.51	9.83										lb/sq.ft
Vf	385	49.06 %	23.95 %	49.47 %	48.00 %	49.11 %										by Vol.
0° Modulus, Ex	146	3.27	1.54	3.59	1.70	3.27										MSI
90° Modulus, Ey	147	3.27	1.54	3.59	1.70	3.27										MSI
Poisson Ratio, PRxy	149	0.20	0.33	0.13	0.55	0.20										
Shear Modulus, Gxy	148	0.71	0.58	0.54	1.40	0.71										MSI
	#N/A															
0° Ten. Ult. Stress	173	52.3	28.5	57.6	27.9	52.4										KSI
0° Comp. Ult. Stress	175	34.9	37.5	38.4	38.8	34.9										KSI
90° Ten. Ult. Stress	174	53.6	28.5	83.7	27.9	53.6										KSI
90° Comp. Ult Stress	176	40.3	37.5	44.3	38.8	40.3										KSI
Shear Ult. Stress	177	14.3	14.1	10.7	31.8	14.3										KSI
0° Flex. Ult. Stress	205	59.4	54.1	61.3	41.7	59.9										KSI
90° Flex. Ult. Stress	206	67.6	54.1	74.2	41.7	72.6										KSI
	#N/A															
Poisson Ratio, PRxy	149	0.20	0.33	0.13	0.55	0.20										
Poisson Ratio, PRyx	150	0.20	0.33	0.13	0.55	0.20										

Highlighted column is laminate currently being edited.

Estimated Raft Weight

ITEM	DESCRIPTION	MAT'L	L[1] (ft)	W[1] (ft)	T[1] (in)	Area[1] (ft^2)	Vol.[2] (ft^3)	Density lb/ft^3	WEIGHT (lb/item)	Qty. (ea.)	WEIGHT (lb)
1	Hull (bot. & sides)	FRP	51.0	16.1	0.509	861	36.2	116.0	4205	2	8,409
2	Trans. Blkhd - Mid	FRP	11.0	3.00	0.509	38.9	1.68	116.0	194	6	1,167
3	Long. Bkhd - Mid	FRP	12.5	3.00	0.509	45.3	1.75	116.0	203	4	813
4	Long. Bkhd - End	FRP	13.0	3.00	0.509	46.3	1.92	116.0	223	4	891
5	3 x 3 x 3/8 Angle	FRP	49.0	0.50	0.375	0.02	0.70	116.0	81	2	163
6	Trans. Blkhd - Radius	FRP	5.50	3.00	0.509	20.8	0.71	116.0	82	2	164
7	Trans. Blkhd - Square	FRP	5.50	3.00	0.509	20.8	0.74	116.0	86	4	345
8	Trans. Blkhd - Radius	FRP	5.50	3.00	0.509	20.8	0.71	116.0	82	2	164
9	Top Plate	FRP	51.0	11.5	0.509	587	25.7	116.0	2979	2	5,959
10	Top Stiffener Foam	PET	9.4	0.5	4.000	0.22	2.09	5.0	10	16	167
11	Top Stiffener Skin	FRP	9.4	1.9	0.375	0.06	0.56	116.0	65	16	1,045
12	Closed Cell Foam	PU	50.0	11.0	36.0	32.1	1,534	1.95	2992	2	5,983
13	Pultruded Tube, 2"x1/4"	FRP	2.00	2.00	0.25	0.01	0.13	112.7	15	6	90
14	PT Blister, 7"x7"	FRP	0.58	0.58	0.75	0.34	0.02	116.0	2.7	6	16
15	Adhesive	MMA	151	0.25	0.25	37.7	0.79	59.5	47	2	94
16	Threaded rod	Steel	22.67	n/a	1.25	0.01	0.19	490	100	3	299
17	Washer	Steel	n/a	n/a	1.25	n/a	n/a	490	0.2	6	1
18	Nut	Steel	n/a	n/a	1.25	n/a	n/a	490	0.5	12	6
19	Std splice plate	Steel	1.71	1.38	0.38	2.3	0.07	490	36	30	1,079
20	Long splice plate	Steel	2.88	1.38	0.38	4.0	0.12	490	61	4	242
21	Splice nut	Steel	3.00	n/a	0.875	n/a	n/a	490	0.2	184	35
22	Splice bolt	Steel	n/a	n/a	0.875	n/a	n/a	490	0.6	92	55
23	Splice washer	Steel	n/a	n/a	0.875	n/a	n/a	490	0.1	184	18

[1]These values may represent a nominal dimension - more precise calculations are used to determine area and/or volume.

[2]All volumes in this table have been computed by SolidWorks using the Mass Properties command and include thickened regions.

Total	**27,206**
Composite	25,470
Hardware	1,736

22,000 < 27,206 < 33,000

All values have been verified by hand calculations

Area = 406.54 in^2

Centroid relative to assembly origin: (in)
X = 0.00
Y = 19.94 (16 < Y < 20)

Moments of inertia of the area, at the centroid: (in^4)
Ix = 101,955

Predicted modulus of laminate (ksi)
E = 3,270 x 0.95 (Cm) = 3,107

Raft vertical bending stiffness (kip-in^2)
EI = 316,774,000 (260,000,000 < EI < 355,000,000)

SEE COMMENTS NEXT PAGE CONCERNING SECTION PROPERTIES - PLEASE CARRY UPDATED VALUES THROUGH CALCUALTIONS, WHERE APPLICABLE

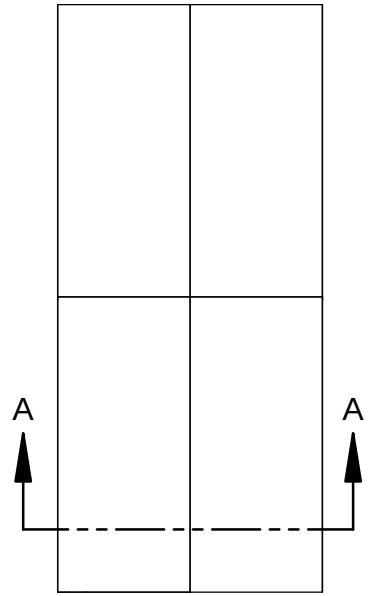

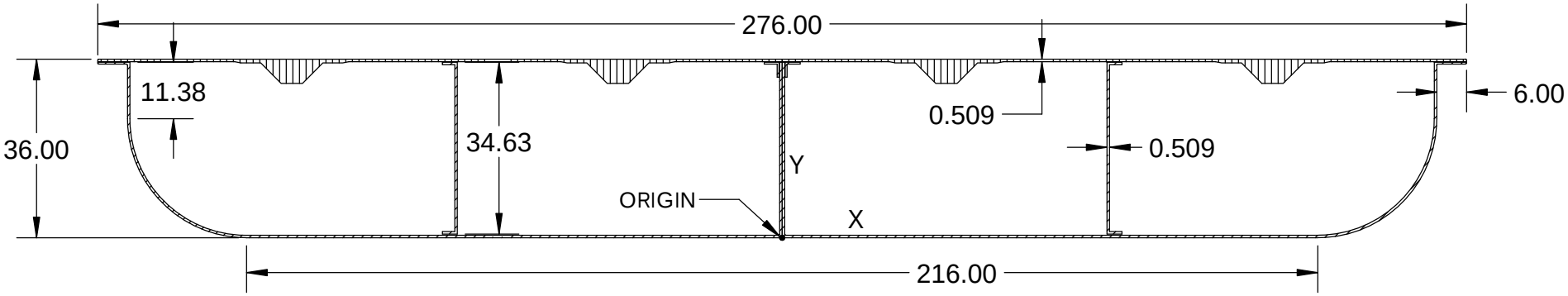

SECTION A-A

		UNLESS OTHERWISE SPECIFIED:		NAME	DATE
		DIMENSIONS ARE IN INCHES TOLERANCES: FRACTIONAL ± ANGULAR: MACH ± BEND ± TWO PLACE DECIMAL ± THREE PLACE DECIMAL ±	DRAWN	JM	5/8/14
			CHECKED		
			ENG APPR.		
			MFG APPR.		
		INTERPRET GEOMETRIC TOLERANCING PER:	Q.A.		
		MATERIAL	COMMENTS:		
NEXT ASSY	USED ON	FINISH			
APPLICATION		DO NOT SCALE DRAWING			

TITLE:

RAFT SECTION PROPERTIES

SIZE	DWG. NO.	REV
A		2

SCALE: 1:192 WEIGHT: SHEET 1 OF 1

PROPRIETARY AND CONFIDENTIAL

THE INFORMATION CONTAINED IN THIS DRAWING IS THE SOLE PROPERTY OF <INSERT COMPANY NAME HERE>. ANY REPRODUCTION IN PART OR AS A WHOLE WITHOUT THE WRITTEN PERMISSION OF <INSERT COMPANY NAME HERE> IS PROHIBITED.

5 4 3 2 1

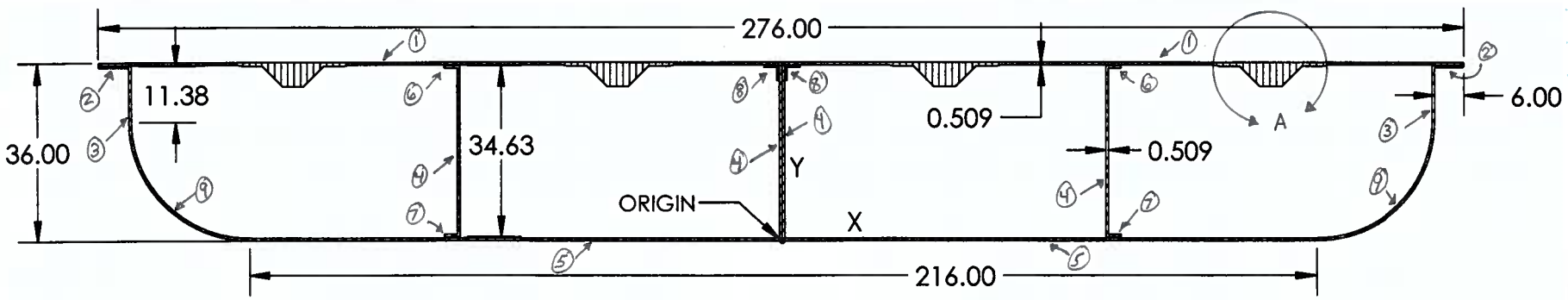

Areas

1) Top Plates $276.0 \times 0.509 = 140.48\ in^2$
2) Hull Flanges $6.0 \times 0.509 = 3.05\ in^2$ $\times 2 = 6.10\ in^2$
3) Hull Outboard Vertical $11.38 \times 0.509 = 5.79\ in^2$ $\times 2 = 11.58\ in^2$
4) Blkhd/Hull Vertical $34.63 \times 0.509 = 17.63$ $\times 4 = 70.52\ in^2$
5) Bottom Plates $216 \times 0.509 = 109.94\ in^2$
6) Blkhd Upper Flanges $2.5 \times 0.509 = 1.27$ $\times 2 = 2.54\ in^2$
7) Blkhd Lower Flanges $2.5 \times 0.509 = 1.27$ $\times 2 = 2.54\ in^2$
8) 3x3 Angle $3 \times 0.375 + 2.625 \times 0.375 = 2.11\ in^2$ $\times 2 = 4.22\ in^2$
9) Hull Radius $\pi(24)/4 \times 0.509 = 9.59$ $\times 2 =$ ~~19.18 in²~~ 38.36 in^2
10) Stiffener Ends $5.5 \times 0.375 = 2.06$ $\times 8 = 16.48\ in^2$
11) Stiffener Slopes $5.66 \times 0.375 = 2.12$ $\times 8 = 16.96\ in^2$
12) Stiffener Middle $4.0 \times 0.375 = 1.50$ $\times 4 = 6.0\ in^2$

2*pi

Total = ~~406.54~~ in^2 425.7 in^2

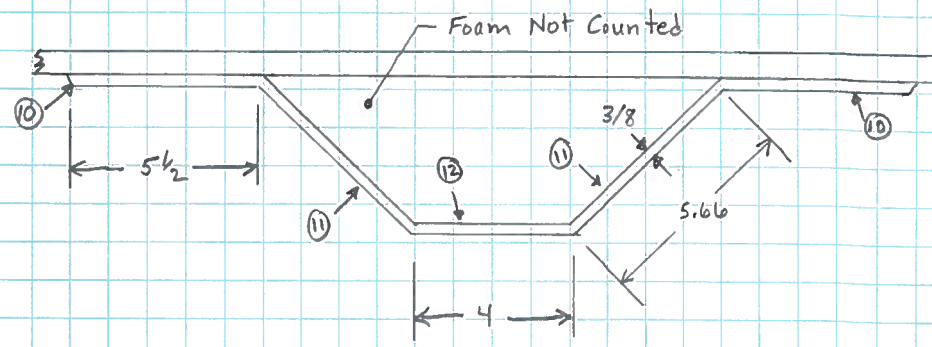

DETAIL A

$$\bar{y} = \frac{\Sigma A_i y_i}{\Sigma A_i}$$

$$140.48(35.75) + 6.10(35.19) + 11.58(29.69) + 70.52(18) + 109.94(0.25) + 2.54(35.13) + 2.54(1.0) + 4.22(34.49) + 19.18(8.72) + 16.48(35.31) + 16.96(33.31) + 6.0(31.31) = 8107.9$$

$$= \frac{8107.9}{406.54} = \text{~~19.94 in~~}$$ 20.65 in

$$I = \Sigma I_i + \Sigma A d_i^2 = 276(0.509)^3/12 + 140.48(35.75-19.94)^2 + 2\times 6(0.509)^3/12 + 6.10(35.19-19.94)^2 + 2\times 0.509(11.38)^3/12 + 11.58(29.69-19.94)^2$$
$$+ 4\times 0.509(34.63)^3/12 + 70.52(18-19.94)^2 + 216(0.509)^3/12 + 109.94(0.25-19.94)^2 + 2\times 2.5(0.509)^3/12 + 2.54(35.13-19.94)^2$$
$$+ 2\times 2.5(0.509)^3/12 + 2.54(1.0-19.94)^2 + 2\times 1.76 + 4.22(34.49-19.94)^2 + 2\times 997 + 19.18(8.72-19.94)^2 + 8\times 5.5(0.375)^3/12$$
$$+ 16.48(35.31-19.94)^2 + 8\times 2.85 + 16.96(33.31-19.94)^2 + 4\times 4.0(0.375)^3/12 + 6.0(31.31-19.94)^2 = \text{~~101,955~~}\ in^4$$

104,251 in^4

Preliminary Pin Bearing Stength Data - UMaine

Hole (in) 0.9375

					Force		Strength		Bearing Deflection		
Specimen	**Length**	**Width**	**Thickness**	**Bearing Area**	***First drop***	***Ultimate***	***First drop***	***Ultimate***	***Pre-test***	***Post-test***	***Deflection***
#	*in*	*in*	*in*	*in ^{2}*	*lb*	*lb*	*ksi*	*ksi*	*in*	*in*	*in*
1	10.568	3.893	0.9115	0.8546	31,612	43,884	36.99	51.35	2.558	2.410	0.148
2	10.561	3.898	0.9268	0.8689	30,560	44,687	35.17	51.43	2.571	2.393	0.178
3	10.582	3.911	0.9180	0.8607	32,528	47,172	37.79	54.81	2.571	2.375	0.196
4	10.597	3.919	0.9187	0.8613	31,094	47,435	36.10	55.07	2.552	2.358	0.194
5	10.597	3.913	0.9235	0.8658	32,300	46,844	37.31	54.10	2.560	2.361	0.200
6	10.578	3.906	0.9084	0.8516	30,893	47,596	36.27	55.89	2.554	2.351	0.204
7	10.561	3.910	0.9281	0.8701	32,271	48,100	37.09	55.28	2.561	2.431	0.130
8	10.555	3.904	0.9188	0.8613	30,582	47,051	35.51	54.63	2.573	2.409	0.165
9	10.538	3.907	0.9187	0.8613	28,811	44,843	33.45	52.07	2.564	2.407	0.157
10	10.543	3.897	0.9172	0.8598	30,876	45,465	35.91	52.88	2.555	2.363	0.192
Avg	**10.568**	**3.906**	**0.919**	**0.862**	**31,153**	**46,308**	**36.16**	**53.75**	**2.562**	**2.386**	**0.176**
CV	***0.2%***	***0.2%***	***0.7%***	***0.7%***	***3.5%***	***3.1%***	***3.5%***	***3.1%***	***0.3%***	***1.2%***	***14.3%***

Bottom Plate

Maximum vertical bending moment on raft - Strength V (bottom in compression)

$$M_u \le \lambda \phi M_n$$

Rupture (evaluated as a composite section)

$$M_n = \frac{F_C I}{y}$$

F_C =	29.67	ksi		λ =	0.90		
I =	104,251	in^4		ϕ =	0.65		
y =	20.65	in					
$\lambda\phi M_n$ =	7,302	kip-ft	>	M_u =	1,612	kip-ft	(Sheet 37)

Rupture (evaluated as a plate in compression)

$$N_u^c \le \lambda \phi_c N_n^c \qquad N_n^c = F^c t \qquad N_u = \sigma t$$

F_c =	29.67	ksi		M_u =	1,612	kip-ft	(Sheet 37)
t =	0.509	in		y =	20.40	in	(N.A. to midplane)
λ =	0.90			I =	101,955	in^4	
ϕ =	0.70			σ =	3.87	ksi	(ave. stress)
$\lambda\phi_c N_n$ =	9.5	kip/in	>	N_u =	1.97	kip/in	

Buckling (evaluated as beam (strip of plate) on an elastic (foam) foundation)

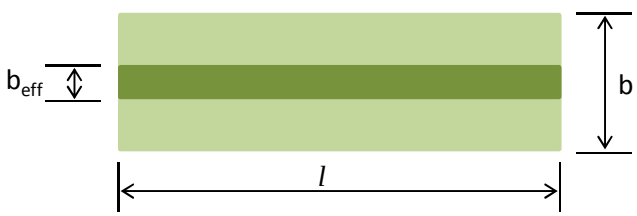

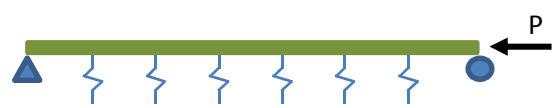

$$P_u = N_u b_{eff} \qquad P_{cr} = \frac{\pi^2 EI}{l^2}\left(1 + \frac{kl^4}{EI\pi^4}\right)$$

$$P_u \le \lambda \phi_c P_{cr}$$

λ =	0.90			l =	149.5	in	
ϕ =	0.70			$E_L = E_T$ =	3.11	Msi	
b_{eff} =	12.0	in	(strip width)	I =	0.1319	in^4	(1 ft strip)
N_u =	1.97	kip/in	(see above)	k =	0.403	ksi	(foam stiffness)
$\lambda\phi_c P_{cr}$ =	575.1	kip	>	P_u =	23.64	kip	

This will be conservative since it assumes the plate is simply supported on short ends only. Spray-in foam is bonded to plate and E is the same in compression or tension = 403 psi. Foam properties have been included with other data sheets.

Top Plate

Maximum vertical bending moment on raft - Strength V (top in tension)

$$M_u \le \lambda \phi M_n$$

Rupture (evaluated as a composite section)

$$M_n = \frac{F_T I}{y}$$

F_t =	44.46	ksi		λ =	0.90		
I =	104,251	in^4		ϕ =	0.65		
y =	15.35	in					
$\lambda\phi M_n$ =	14,720	kip-ft	>	M_u =	1,612	kip-ft	(Sheet 37)

Rupture (evaluated as a plate in tension)

$$N_u^t \le \lambda \phi_t N_n^t \qquad N_n^t = 0.7 F^t t \qquad N_u = \sigma t$$

F_t =	44.46	ksi		M_u =	1,612	kip-ft	(Sheet 37)
t =	0.509	in		y =	15.10	in	(N.A. to midplane)
λ =	0.90			I =	104,251	in^4	
ϕ_t =	0.65			σ =	2.80	psi	(ave. stress)
$\lambda\phi_t N_n$ =	9.3	kip/in	>	N_u =	1.43	kip/in	

Top Plate Buckling (evaluated as a plate in compression - Strength V)

$$N_u^c \le \lambda \phi_c N_n^c \qquad N_n^c = F^{cr} t \qquad F^{cr} = \left(\frac{t}{b}\right)^2 \frac{\pi^2}{6}\left((4k_{cr} - 3)\sqrt{E_L E_T} + k_{cr} E_T \nu_{LT} + 2k_{cr} G_{LT}\right)$$

M_u =	699	kip-ft	(Sheet 37)	y =	15.10	in	(dist. from N.A.)
σ =	1.21	psi	(ave. stress)	I =	104,251	in^4	
F^{cr} =	3.03	ksi		$E_L = E_T$ =	3.11	Msi	
t =	0.509	in		G_{LT} =	0.67	Msi	
λ =	0.90		$N_u = \sigma t$	ν_{LT} =	0.20		
ϕ =	0.70			b =	30.25	in	(unsupported width)
				k_{cr} =	1.1		(1.0 (pin) –1.3 (fixed))
$\lambda\phi_c N_n$ =	0.97	kip/in	>	N_u =	0.62	kip/in	

Top plate seam at midspan - maximum moment at 0.5L on Raft 2

$$N_{LT,u} \le \lambda \phi_v N_{LT,n}$$

$$N_{LT,n} = F^v c$$

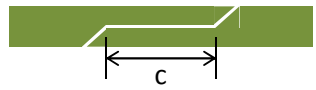

F^v =	1.60	ksi	(MA560 TDS)	M_u =	1,377	kip-ft	(Sheet 37)
c =	3.00	in		y =	15.10	in	(N.A. to midplane)
λ =	0.90		$N_u = \sigma t$	I =	104,251	in^4	
ϕ_v =	0.50			σ =	2.39	psi	(ave. stress)
				t =	0.509	in	
$\lambda\phi_c N_n$ =	2.16	kip/in	>	N_u =	1.22	kip/in	

<u>Longitudinal Bulkhead</u>

Maximum vertical shear on raft - Strength V

$$V_u \le \lambda \phi V_n$$

V_u =	80.8	kip	(Sheet 37)
# webs =	4		

Rupture (evaluated as a composite section)

$$V_n = F_{LT} A_S$$

F_{LT} =	12.16	ksi		λ =	0.90		
A_S =	17.5	in^2	(35 x 0.5)	ϕ =	0.65		
$\lambda\phi V_n$ =	124	kip	>	V_u =	20.2	kip	(V_u / 4)

Rupture (evaluated as a plate in shear)

$$N_{LT,u} \le \lambda \phi_v N_{LT,n}$$

$$N_{LT,n} = F_{LT} t$$

				V_u =	80.8	kip/in	(Sheet 37)
				# webs =	4		
F_{LT} =	12.2	ksi		λ =	0.90		
t =	0.53	in		ϕ =	0.70		
h =	35.0	in	(36 - 2(0.5))				
$\lambda\phi_v N_{LT,n}$ =	4.1	kip/in	>	$N_{LT,u}$ =	0.6	kip/in	(V_u / 4/35.0)

Web Buckling (evaluated as a composite section)

$$V_n = f_{cr} A_S$$

$$f_{cr} = \frac{t_w^2 k_{LT} \sqrt[4]{E_L E_t^3}}{3h^2}$$

$$k_{LT} = 8.1 + 5.0 \frac{2G_{LT} + E_t \nu_{LT}}{\sqrt{E_L E_T}}$$

f_{cr}	2.69	ksi		V_u =	80.8	kip/in	(Sheet 37)
A_S =	18.6	in^2	(35 x 0.5)	# webs =	4		
k_{LT} =	11.3						
t_w =	0.53	in		$E_L = E_T$ =	3.11	Msi	
λ =	0.90			G_{LT} =	0.69	Msi	
ϕ =	0.80			h =	35.0	in	(36 - 2(0.5))
				ν_{LT} =	0.20		
$\lambda\phi V_n$ =	35.9	kip	>	V_u =	20.2	kip	(V_u / 4)

Buckling of longitudinal bulkhead due to tire loading

$$N_u^c \le \lambda \phi_c N_n^c$$

$$N_n^c = F^{cr} t$$

$$F^{cr} = \left(\frac{t}{b}\right)^2 \frac{\pi^2}{6}\left((4k_{cr} - 3)\sqrt{E_L E_T} + k_{cr} E_T \nu_{LT} + 2k_{cr} G_{LT}\right)$$

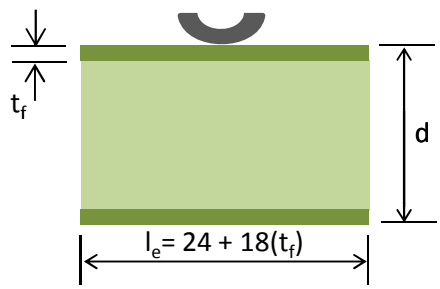

$$N_u = \frac{W_u}{l_e}$$

F^{cr} =	2.27	ksi					
t =	0.509	in					
$E_L = E_T$ =	3.11	Msi					
G_{LT} =	0.67	Msi					
ν_{LT} =	0.20						
λ =	0.90						
ϕ =	0.70			d =	35	in	(unsupported height)
				W_u =	15.5	kip	
k_{cr} =	1.1	(1.0 (pin)→1.3 (fixed))		l_e =	33.2	in	
$\lambda\phi_c N_n$ =	0.73	kip/in	>	N_u =	0.47	kip/in	

Adhesive Bond Strength

Shear transfer from longitudinal bulkhead to top/bottom plate - Strength V

$$V \le \lambda \phi F_{LT}$$

$$V = \frac{V_u Q}{Ib}$$

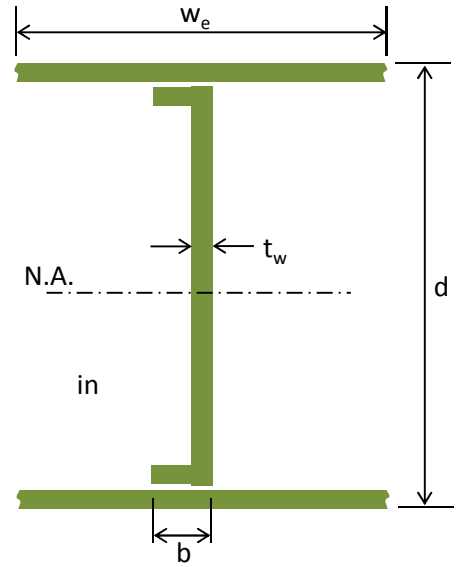

V_u =	80.8	kip	(Sheet 37)
# webs =	4		
V_u =	20.2	kip	(V_u / 4)
Q =	229	in^3	
w_e =	10.2	in	($20*t_w$)
d =	36.0	in	
$t_f = t_w$ =	0.509	in	
b =	3.0	in	
I =	5833	in^4	
F_{LT} =	1.60	ksi	(MA560 TDS)
ϕ =	0.50		

y = 20.62 in

λ = 0.90

$\lambda\phi F_{LT}$ =	0.72	ksi	>	V =	0.26	ksi	(V_u / 4)

Bolted Connections - Top/Bottom Flanges

$$R_u = \lambda \phi R_n C_\Delta$$

Pin bearing

$$R_{br} = t d_n F_L^{br}$$

t =	1.017	in	(plate thk)	λ =	0.90
d_n =	0.875	in	(bolt dia.)	ϕ =	0.80
F_{br} =	44.2	ksi	(brng stren.)	C_Δ =	1.0

$\lambda\phi R_n$ =	28.3	kip	>	R_u =	19.40	kip	(Sheet 38)

Shear-out

$$R_{sh} = 1.4\left(e_1 - \frac{d_n}{2}\right) t F_{sh}$$

t =	1.017	in	(plate thk)			
d_n =	0.938	in	(dia. +1/16)			
F_{sh} =	12.16	ksi	(shear str.)			
λ =	0.90			e_1 =	3.75	in
ϕ =	0.50			C_Δ =	1.0	

$\lambda\phi R_n$ =	56.8	kip	>	R_u =	19.40	kip	(Sheet 38)

Net tension

$$R_{nt} = \frac{1}{K_{nt,L}}(w - nd_n)tF_L^t$$

$$K_{nt,L} = C_L\left(S_{pr} - 1.5\frac{(S_{pr}-1)}{(S_{pr}+1)}\Theta\right) + 1$$

t =	1.017	in	(plate thk)	n =	3		
d_n =	0.938	in	(dia. +1/16)	w =	10.5	(3 x g)	
F_L =	44.54	ksi	(ten. stren.)	g =	3.5		
C_L =	0.40			$K_{nt,L}$ =	2.24		
λ =	0.90			S_{pr} =	4.00	(g/d)	
ϕ =	0.50			Θ =	1.0	($e_1/g \geq 1$)	
C_Δ =	1.0						
$\lambda\phi R_n$ =	70.0	kip	>	R_u =	58.20	kip	(Sheet 38)

Cleavage

$$R_{cl} = 0.15((e_2 + 0.5g - d_n)F_{t,L} + 2e_1F_{sh})t$$

t =	1.017	in	(plate thk)	g =	3.50	in		
d_n =	0.938	in	(dia. +1/16)	e_1 =	3.75	in		
F_{sh} =	12.16	ksi	(shear str.)	e_2 =	2.25	in	($2e_{2,min}$)*	
$F_{t,L}$ =	44.54	ksi	(tensile str.)	λ =	0.90			
C_Δ =	1.0			ϕ =	0.50			
$\lambda\phi R_n$ =	34.7	kip	>	R_u =	19.40	kip	(Sheet 38)	

* since the edge distance in all joints is >> $e_{2,min}$, a value of 2 x $e_{2,min}$ has been used for e_2

Bolted Connections - Vertical Webs

Since the force per bolt acting on the webs is 12.3 kips (less than 19.4 kips evaluated for the flanges), the gage length and end distance is the same as above, and the material properties ($F_{t,L}$, $F_{t,T}$, F_{sh}, etc.) are the same, the bolted connections in the web are assumed to be satisfactory based on calculations performed above for the flanges in the longitudinal direction. However, bolt loading in webs is evaluated for load angles using equations for 5-90 degress from longitudinal.

$$R_u \leq \lambda\phi R_n C_\Delta$$

Pin bearing

$$R_{br} = td_nF_L^{br}$$

t =	1.017	in	(plate thk)	λ =	0.90	
d_n =	0.875	in	(dia. +1/16)	ϕ =	0.80	
F_{br} =	44.2	ksi	(brng stren.)	C_Δ =	1.0	
$\lambda\phi R_n$ =	28.3	kip	>	R_u =	12.30	kip	(Sheet 38)

Net tension - force from 5-90 degrees

$$R_{nt} = \frac{1}{K_{nt,T}}(w - nd_n)tF_T^t$$

$$K_{nt,T} = C_T\left(S_{pr} - 1.5\frac{(S_{pr}-1)}{(S_{pr}+1)}\Theta\right) + 1$$

t =	1.017	in	(plate thk)	n =	3	
d_n =	0.938	in	(dia. +1/16)	w =	10.5	(3 x g)
F_T =	45.56	ksi	(53.6 x 0.85)	g =	3.5	
C_T =	0.50	(transverse coefficient)		$K_{nt,T}$ =	2.55	
λ =	0.90			S_{pr} =	4.00	(g/d)
ϕ =	0.50			Θ =	1.0	(e_1/g ≥ 1)
C_Δ =	1.0					

$\lambda\phi R_n$ =	62.9	kip	>	R_u =	36.90	kip	(Sheet 38)

<u>Stainless Bolted Connections - Vertical Webs</u>

$$R_u \le \lambda\phi R_n C_\Delta$$

Pin bearing

$$R_{br} = td_n F_L^{br}$$

t =	1.017	in	(plate thk)	λ =	0.90	
d_n =	0.875	in	(bolt dia.)	ϕ =	0.80	
F_{br} =	44.2	ksi	(brng stren.)	C_Δ =	1.0	

$\lambda\phi R_n$ =	28.3	kip	>	R_u =	14.80	kip	(Sheet 39)

Shear-out

$$R_{sh} = 1.4\left(e_1 - \frac{d_n}{2}\right)tF_{sh}$$

t =	1.017	in	(plate thk)			
d_n =	0.938	in	(dia. +1/16)			
F_{sh} =	12.16	ksi	(shear str.)			
λ =	0.90			e_1 =	3.5	in
ϕ =	0.50			C_Δ =	1.0	

$\lambda\phi R_n$ =	52.5	kip	>	R_u =	14.80	kip	(Sheet 39)

Net tension

$$R_{nt} = \frac{1}{K_{nt,L}}(w - nd_n)tF_L^t$$

$$K_{nt,L} = C_L\left(S_{pr} - 1.5\frac{(S_{pr}-1)}{(S_{pr}+1)}\Theta\right) + 1$$

t =	1.017	in	(plate thk)	n =	3	
d_n =	0.938	in	(dia. +1/16)	w =	10.5	(3 x g)
F_L =	44.54	ksi	(ten. stren.)	g =	3.5	
C_L =	0.40			$K_{nt,L}$ =	2.24	
λ =	0.90			S_{pr} =	4.00	(g/d)
ϕ =	0.50			Θ =	1.0	($e_1/g \geq 1$)
C_Δ =	1.0					
$\lambda\phi R_n$ =	70.0	kip	>	R_u =	44.40	kip (Sheet 39)

Cleavage

$$R_{cl} = 0.15\left((e_2 + 0.5g - d_n)F_{t,L} + 2e_1F_{sh}\right)t$$

t =	1.017	in	(plate thk)	g =	3.50	in	
d_n =	0.938	in	(dia. +1/16)	e_1 =	3.75	in	
F_{sh} =	12.16	ksi	(shear str.)	e_2 =	2.98	in	(4-1.017)
$F_{t,L}$ =	44.54	ksi	(tensile str.)	λ =	0.90		
C_Δ =	1.0			ϕ =	0.50		
$\lambda\phi R_n$ =	39.7	kip	>	R_u =	19.40	kip	(Sheet 38)

Net tension - force from 5-90 degrees

$$R_{nt} = \frac{1}{K_{nt,T}}(w - nd_n)tF_T^t$$

$$K_{nt,T} = C_T\left(S_{pr} - 1.5\frac{(S_{pr}-1)}{(S_{pr}+1)}\Theta\right) + 1$$

t =	1.017	in	(plate thk)	n =	3	
d_n =	0.938	in	(dia. +1/16)	w =	10.5	(3 x g)
F_T =	45.56	ksi	(53.6 x 0.85)	g =	3.5	
C_T =	0.50	(transverse coefficient)		$K_{nt,T}$ =	2.33	
λ =	0.90			S_{pr} =	3.50	(g/d)
ϕ =	0.50			Θ =	1.0	($e_1/g \geq 1$)
C_Δ =	1.0					
$\lambda\phi R_n$ =	68.7	kip	>	R_u =	44.40	kip (Sheet 39)

Transverse load in line with HSS shelf

1. Assume the transverse load is carried entirely by the three full depth webs = 20.2 kips/3 = 6.73 kips
2. First analyze a horizontal 1" wide strip of web at mid height of the pontoon for flexure stresses
3. Second analyze the adhesive joint at the top/bottom of the web for shear stresses

P =	6.73	kip	
h =	31.0	in	(ht of plate)
l =	3	in	(length of strip)
N =	0.217	kip/in	(6.73 / h)
M_A =	2.172	kip-in	(N x 10)
$M_B = M_u$ =	2.82	kip-in	(M_A + N x l)

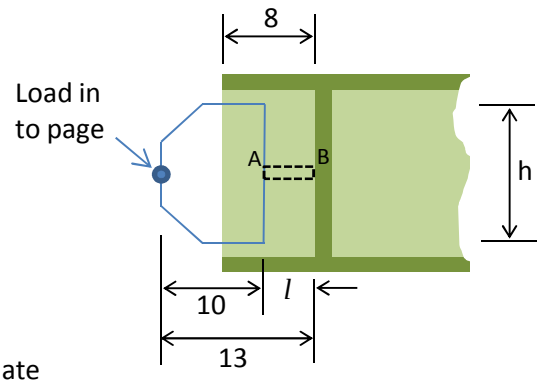

N = distributed load along height of support plate

M_A = applied moment at point A due to load on support plate

$$M_u \le \lambda\phi M_n \qquad M_n = \frac{F_C I}{y}$$

F_C =	29.67	ksi		λ =	0.90	
I =	0.088	in^4	($1x1.017^3/12$)	ϕ =	0.65	
y =	0.509	in	(1.017/2)			
$\lambda\phi M_n$ =	2.99	kip-in	>	M_u =	2.82	kip-in

4. For shear in adhesive, assume half the force is resisted at the top joint and half at the bottom joint

$$V \le \lambda\phi F_{LT}$$

P/2 =	3.37	kip	(6.73 / 2)				
A_s =	24.0	in^2	(8 x 3)	λ =	0.90		
F_{LT} =	1.60	ksi	(MA560 TDS)	ϕ =	0.50		
$\lambda\phi F_{LT}$ =	0.72	ksi	>	V =	0.14	ksi	(P/2 / A_s)

Compression Loading due to Threaded Rods

Compressive strength of FRP blister

$$P_u \le \lambda \phi F_c A_e$$

				Steel brng plt, A_s =	36.0	in^2	(6x6)
Axial force, P =	55.0	ksi	(Sheet 34)	A_h =	1.77	in^2	(∅1.5 hole)
Loaded area, A_e =	34.23	in^2	(A_s - A_h)	λ =	0.40		
Comp. strength, F_c =	29.67	ksi		ϕ =	0.70		

$C_m\lambda\phi_c P_n$ =	299	kip	>	P_u =	77.0	kip	(1.4 x 55)

Compression strength of bulkhead

$$P_u \le \lambda \phi_c F_c A_e$$

Axial force, P =	55.0	kip	(Sheet 34)	λ =	0.40
Blkhd xsec area, A_s =	18.6	in^2	(35 x 0.53)	ϕ =	0.70
Comp. strength, F_c =	29.67	ksi			

$\lambda\phi_c P_n$ =	154	kip	>	P_u =	77.0	kip	(1.4 x 55)

Buckling of transverse bulkhead

$$N_u^c \le \lambda \phi_c N_n^c$$

$$N_n^c = F^{cr} t$$

$$F^{cr} = \left(\frac{t}{b}\right)^2 \frac{\pi^2}{6}\left((4k_{cr} - 3)\sqrt{E_L E_T} + k_{cr} E_T \nu_{LT} + 2k_{cr} G_{LT}\right)$$

Foam provides uniform bracing on both sides of the bulkhead. Therefore, the unsupported length of the plate, "b", is considered to be 0 and the bulkhead is not at risk of buckling.

Shear and compression on MMA behind blister

$$V \le \lambda \phi F_{LT}$$

F_{LT} =	1.60	ksi	(MA560 TDS)	ϕ =	0.70
F_c* =	4.23	ksi	(MA560 report)	λ =	0.40

Shear component (55 kip x 1.4 x cos(75.4°)) =	19.46			
Comp. Component (55 kip x 1.4 x sin(75.4°)) =	74.50			
Loaded area, A_e =	64.25	in^2	(A_b - A_h)	(use 8-1/8 x 8-1/8 plate)

*Adehesive compressive strength is higher than tensile. However, since compressive strength is not listed in data sheet, the tensile value is used.

$\lambda\phi F_{LT}$ =	0.45	ksi	>	V =	0.30	ksi	(P / A_e)
$\lambda\phi F_c$ =	1.18	ksi	>	V =	1.16	ksi	(P / A_e)

Ice loading

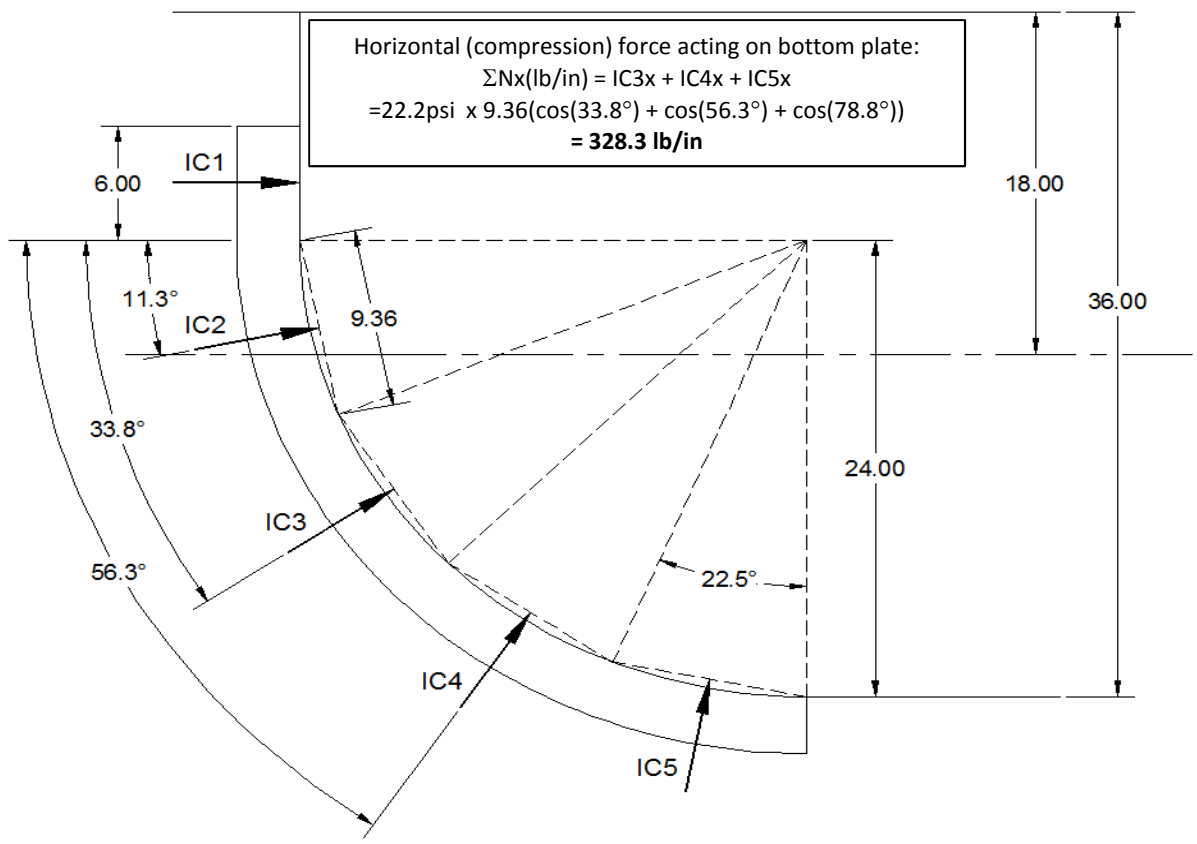

Combined compression (bottom plate - Extreme II + Ice) ϕ = n/a per spec for ice

M_u =	952	kip-ft	(Sheet 37)	t =	0.509	in	
y =	15.10	in	(N.A. to mid)	σ =	1.65	psi	(ave. stress)
I =	104,251	in^4		N_L =	0.84	kip/in	(σ x t)
λ =	1.00	(extreme event)		N_T =	0.33	kip/in	(from above)
λN_n =	15.8	kip/in	>	N_T =	0.33	kip/in	(top plate)
λN_n =	15.1	kip/in	>	N_L =	0.84	kip/in	(bot. plate)

Plate bending between bulkheads

*Using beam on elastic foundation spreadsheet based on equations from "Formulas for Stress and Strain" R. Roark and W. Young (see next page)

$$f_u = \frac{M_u y}{I}$$

Nominal 1" wide strip at 22.2 psi, w = 22.2 lb/in

I =	0.011	in^4	(0.509^3/12)
M_u =	0.035	kip-ft	(BEF sheet)
f_u =	9.73	ksi	

Compressive strength of foam = 37 psi at 5% strain. 5% strain over 35" thick foam = 1.75".
K = 37 / 1.75 x 0.85 = 17.97 lb/in²/in

λF_c =	29.7	kip/in	>	F_u =	9.73	ksi

VECTORPLY®
Performance Composite Reinforcements

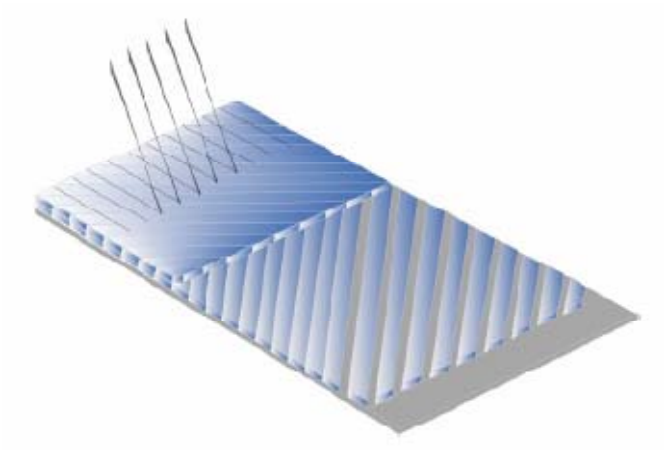

E-BXM 4008

Fiber Type: E-Glass
Architecture: 45/-45 Double Bias
Dry Thickness: 0.060 in. / 1.52 mm
Total Weight: 48.24 oz/sq.yd / 1636 g/sq.m

Roll Specifications			Fiber Architecture Data	
Roll Width:	Roll Weight:	Roll Length:	0 ° :	n/a
50 in / 1270 mm	231 lb / 105 kg	54 yd / 49 m	45 ° :	20.07 oz/sq.yd / 680 g/sq.m
			90 ° :	n/a
			-45 ° :	20.07 oz/sq.yd / 680 g/sq.m
			Chopped Mat :	8.10 oz/sq.yd / 275 g/sq.m

1: Packaging: box or bag.
2: Weights do not include polyester stitching.

Laminated Properties

Laminate Weight (lb/sq.ft)	45 ° E-BXM 4008 Resin Infused	45 ° E-BXM 4008 Open Mold
Fiber	0.34	0.34
Resin	0.15	0.34
Total	0.49	0.67

Physical Properties	E-BXM 4008 Resin Infused	E-BXM 4008 Open Mold
Density (g/cc))	1.88	1.63
Fiber Content (% by Wt.)	69%	50%
Thickness (in)	0.050	0.079

Laminate Modulii		
(MSI)	E-BXM 4008 Resin Infused	E-BXM 4008 Open Mold
Ex	3.51	2.35
Ey	3.51	2.35
Gxy	0.66	0.45
Ex,flex.	3.33	2.23
Ey,flex.	3.33	2.23

Ultimate Stress		
(KSI)	E-BXM 4008 Resin Infused	E-BXM 4008 Open Mold
Long. Ten.	58	39
Long. Comp.	80	54
Trans. Ten.	58	39
Trans. Comp.	80	54
In-Plane Shear	15	10
Long. Flex.	82	55
Trans. Flex.	82	55

In-Plane Stiffness, "EA"		
10^3 lb/in	E-BXM 4008 Resin Infused	E-BXM 4008 Open Mold
(EA)x	175	187
(EA)y	175	187
(GA)xy	33	36

Ultimate In-Plane Load		
lb/in	E-BXM 4008 Resin Infused	E-BXM 4008 Open Mold
Long. Ten.	2,864	3,060
Long. Comp.	3,981	4,254
Trans. Ten.	2,864	3,060
Trans. Comp.	3,981	4,254
In-Plane Shear	753	823

Notes:

1: Resin infused laminate made with a poly / vinyl ester resin blend.

2: Open mold laminate made with poly / vinyl ester resin blend.

3: All standard reinforcements should be infused with a flow aid or Vectorfusion® reinforcements.

VECTORPLY CORPORATION

3500 Lakewood Dr. Phenix City, AL 36867 tel. 334 291 7704 fax. 334 291 7743

REV: 5/3/2011

Disclaimer:

As a service to customers, Vectorply Corporation ("VP") may provide computer-generated predictions of the physical performance of a product using a reinforcement fabric produced by VP in combination with other materials or systems.

VP makes no warranty whatsoever as to the accuracy of any such predicted physical performance, and customer acknowledges that customer is solely responsible for determining the performance and fitness for a particular use of any product produced by customer utilizing a fabric or material produced or manufactured by VP. Specifications of reinforcements may change without notice.

841 Park East Drive
P.O. Box 25
Woonsocket, RI 02895
Phone: 401-762-1500
Fax: 401-762-1580

Product Data Sheet

Product ID:	3D E-glass – 54oz - Ortho
Description:	54 oz Orthogonal Weave E-glass fabric
Raw Material:	PPG Hybon 2022 E-glass or equivalent
Weave:	3D with 2 warp layers, 3 fill layers and Z-binder yarns
Fiber Distribution:	48% warp / 48% fill / 4% Z-yarn
Weight:	54 oz/yd^2 ± 1.5 (1830 gsm ± 50 gsm)
Std. Width:	50” or 60” (± 0.5”)
Edge Type:	Aramid Leno @ Selvedge
Std. Roll Size:	25, 50 or 100 yards

Rev. 1, SRC, 031114

A brand of ITW Polymers Adhesives North America

TECHNICAL DATA SHEET

MA560-1

Description

Plexus® MA560-1 is a two-part methacrylate adhesive designed for structural bonding of thermoplastic, metal, and composite assemblies[1]. Combined at a 1:1 ratio, MA560-1 has a working time of 55 to 70 minutes at room temperature and at 74˚F (23˚C). MA560-1 reaches lap shear values of approximately 500 and 1000 PSI in 3 and 4 hours respectively at a 0.03 in. (0.75mm). This product has been designed for use on large structures where a very long open time product is needed. Plexus MA560-1 is commonly used for bonding stringers and liners into large fiberglass boats with bond lines up to 1.00 in. (25mm) thick. In addition, this product provides a unique combination of excellent fatigue endurance, outstanding impact resistance, and superior toughness. Plexus MA560-1 is gray when mixed and is available in ready-to-use 400 ml cartridges, 5 gallon (20 liter) pails and 50 gallon (200 liter) drums to be dispensed as a non-sagging gel using standard meter-mix equipment[9]. For optimal mixing and flow, stock # 30095 (13-18) mix nozzles are recommended for cartridge dispensing.

Characteristics

Room Temperature Cure	
▪ Working Time[2]	55 – 70 minutes
▪ Fixture Time[3]	220 – 240 minutes
▪ Operating Temperature[6]	-40°F to 180°F (-40°C to 82°C)
▪ Gap Filling	0.03 in. to 1.00 in. (0.75 mm to 25 mm)
▪ Mixed Density	7.95 lbs/gal (0.95 g/cc)
▪ Flash Point	51°F (11°C)

Chemical Resistance[4]

Excellent resistance to:	**Susceptible to:**
▪ Hydrocarbons	▪ Polar Solvents
▪ Acids and Bases (pH 3-10)	▪ Strong Acids and Bases
▪ Salt Solutions	

Typical Physical Properties (uncured) – Room Temperature

	Adhesive	**Activator**
Viscosity, cP	145,000-185,000	170,000-205,000
Color	White	Black
Density, lbs/gal (g/cc)	7.74 (0.93)	7.89 (0.95)
Mix Ratio by Volume	1.0	1.0
Mix Ratio by Weight	1.0	1.0

Typical Mechanical Properties (Cured) – Room Temperature

Tensile (ASTM D638)	
▪ Strength, psi (MPa)	2,500 – 3,000 (17.2 – 20.7)
▪ Modulus, psi (MPa)	25,000 – 50,000 (172 – 345)
▪ Strain to Failure (%)	>130
Lap Shear (ASTM D1002)	
▪ Cohesive Strength, psi (MPa)	1,600 – 2,200 (11.0 – 15.2)

Recommended for:

- ▪ ABS
- ▪ Acrylics
- ▪ FRP
- ▪ Gelcoats
- ▪ PVC
- ▪ Polyesters (including DCPD modified)
- ▪ Stainless Steel*
- ▪ Aluminum*
- ▪ Styrenics
- ▪ Urethanes (general)
- ▪ Vinyl Esters

* **Plexus Primer** Suggested[7]

VOC's	% (g/L)
During Cure (see back page)	<1 (<10)

Shelf Life	Months
Adhesive (A Side)	7
Activator (B Side)	7
Cartridges	7

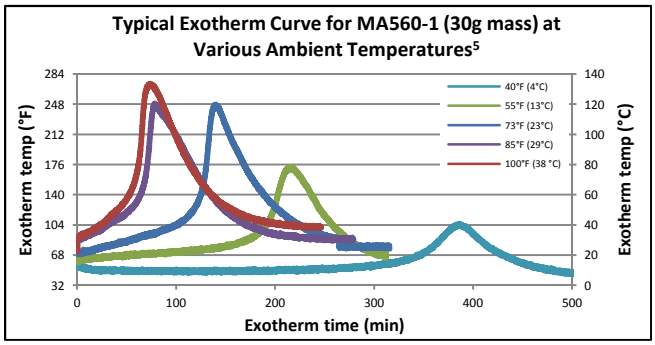

TECHNICAL DATA SHEET

PLEXUS MA560-1

SAFETY & HANDLING: ITW Plexus® adhesive (Part A) and activator (Part B) are flammable. Contents include methacrylate esters. Keep containers closed after use. Wear gloves and safety glasses to avoid skin and eye contact. Wash with soap and water after skin contact. In case of eye contact, flush with water for 15 minutes and get medical attention. Harmful if swallowed. Keep out of reach of children. Keep away from heat, sparks, and open flames. For more complete heath and safety information contact ITW Plexus for a Material Safety Data Sheet (MSDS).

NOTE: This material is mass sensitive. A large amount of heat may be generated when large masses of material are mixed at one time. Further, the heat generated by the exotherm resulting from the mixing of large masses of this system can result in the release of entrapped air, steam, and volatile gases. To prevent this, dispense only enough material as needed for the application and for use within the working time of the product and confine gap thickness to no more than its maximum gap fill capability. Questions relative to handling and applications should be directed to ITW Plexus at 800-851-6692.

DISPENSING ADHESIVE AND APPLICATION: ITW Plexus Adhesives may be applied manually or with all stainless steel bulk dispensing equipment. Automated applications may be accomplished with a variety of 1-to-1 meter-mix equipment delivering both components to a static mixer. Avoid contact with copper or copper-containing alloys in all fittings, pumps, etc. Seals and gaskets should be made of Teflon, Teflon-coated PVC foam, ethylene/propylene, or polyethylene. Avoid the use of Viton, BUNA-N, Neoprene, or other elastomers for seals and gaskets. For more information, contact ITW Plexus. To assure maximum bond strength, surfaces must be mated within the specified working time. Use sufficient material to ensure the joint is completely filled when parts are mated and clamped. All adhesive application, part positioning, and fixturing should occur *before* the working time of the mix has expired. After indicated working time, parts must remain undisturbed until the fixture time is reached. Clean up is easiest *before* the adhesive has cured. Citrus terpene or N-methyl pyrrolidone (NMP) containing cleaners, degreasers, and soap and water can be used for best results. If the adhesive is already cured, careful scraping, followed by a wiping with a cleaning agent, may be the most effective method of clean up.

EFFECT OF TEMPERATURE: Application of adhesive at temperatures between 65°F (18°C) and 85°F (30°C) will ensure proper cure. Temperatures below 65°F (18˚C) or above 85°F (30°C) will slow down or increase cure rate significantly, respectively. Temperature affects viscosities of Parts A and B of this adhesive. To ensure consistent dispensing in meter-mix equipment, adhesive and activator temperatures should be held reasonably constant throughout the year. Adhesive in cured state behaves differently at elevated and low temperatures. See ITW Plexus for specific values.

STORAGE AND SHELF LIFE: Shelf life is based on continuous storage between 54°F (12°C) and 74°F (23°C). Long-term exposure above 74°F (23°C) will reduce the shelf life. Prolonged exposure above 98°F (37°C) quickly diminishes the reactivity of the product. These products should never be frozen.

VOC'S: As calculated according to Appendix A to Subpart PPPP of EPA Part 63, Plastics Part and Coatings MACT. The amount of volatile material released when 10-15g of mixed adhesive is allowed to cure between foil for 24 hours at room temperature followed by 1 hour at 220°F (104°C). See ITW Plexus for specific values.

PRODUCT USE: Many factors beyond ITW PLEXUS® control and uniquely within user's knowledge and control can affect the use and performance of an ITW PLEXUS® product in a particular application. Given the variety of factors that can affect the use and performance of an ITW PLEXUS® product, the end user is solely responsible for evaluating any ITW PLEXUS® product and determining whether it is fit for a particular purpose and suitable for user's design, production and final application.

EXCLUSION OF WARRANTIES: AS TO THE HEREIN DESCRIBED MATERIALS AND TEST RESULTS, THERE ARE NO WARRANTIES WHICH EXTEND BEYOND THE DESCRIPTION ON THE FACE HEREOF ITW PLEXUS® MAKES NO OTHER WARRANTIES, EXPRESS OR IMPLIED, INCLUDING, BUT NOT LIMITED TO ANY IMPLIED WARRANTY OF MERCHANTABILITY OR FITNESS FOR A PARTICULAR PURPOSE. SINCE THE USE OF THE HEREIN DESCRIBED INVOLVES MANY VARIABLES IN METHODS OF APPLICATION, DESIGN, HANDLING AND/OR USE, THE USER, IN ACCEPTING AND USING THESE MATERIALS, ASSUMES ALL RESPONSIBILITY FOR THE END RESULT. ITW PLEXUS® SHALL NOT OTHERWISE BE LIABLE FOR LOSS OF DAMAGES, WHETHER DIRECT, INDIRECT, SPECIAL, INCIDENTAL OR CONSEQUENTIAL, REGARDLESS OF THE LEGAL THEORY ASSERTED, INCLUDING NEGLIGENCE, WARRANTY OR STRICT LIABILITY.

Notes

1. **ITW Plexus strongly recommends that all substrates be tested with the selected adhesive in the anticipated service conditions to determine suitability.**
2. **Working Time: The time elapsed between the moment Parts A and B of the adhesive system are combined and thoroughly mixed and the time when the adhesive is no longer useable. Times presented were tested at 74°F (23°C).**
3. **Fixture Time: Varies with bond gap and ambient temperature. Present values were measured at 74°F (23°C).**
4. **Resistance to chemical exposure varies greatly based on several parameters including temperature, concentration, bond line thickness, and duration of exposure. The chemical resistance guidelines listed assume long-term exposures at ambient conditions.**
5. **In a typical bond line, exotherm temperatures will be lower than the temperatures shown.**
6. **All adhesives soften with temperature and should be evaluated at expected conditions. Consult with ITW Plexus for values at a specific temperature.**
7. **Exterior applications require the use of coatings or primers that inhibit oxidation of the metals.**

NOTE: The technical information, recommendations, and other statements contained in this document are based upon tests or experience that ITW PLEXUS® believes are reliable, but the accuracy or completeness of such information is not guaranteed. The information provided is not intended to substitute for the customers own testing.

ITW POLYMERS ADHESIVES NORTH AMERICA
30 Endicott Street
Danvers, MA 01923 USA
TEL: 855-489-7262
FAX: 978-774-0516
e-mail: info@itwplexus.com

Plexus MA560-1 Rev 04, 09/2013

ITW Polymers Adhesives

Devcon PLEXUS STRUCTURAL ADHESIVES SprayCore

Technical Service Report

ITW Polymers Adhesives
North America Technical Center
Danvers, Massachusetts

Adhesive Testing

Project # MTL-XXXX

Prepared by Mathew Faino 04/04/14

Prepared for:

XXXXX

Abstract

This study was initiated to assess the Compressive Strength and Moduli of MA530 and MA560-1 adhesives. It was undertaken to correct flaws contained within the data portion of the original study MTL-2506 and to supersede it.

Test results reveal that Plexus MA530 has a 7 day Compressive Strength of 4,385 psi and a Compressive Modulus of 132,029 psi. MA560-1 has a 7 day Compressive Strength of 4,230 psi and a Compressive Modulus of 127,412 psi. Twenty four hour data is also contained within the Results portion of this report.

It should be noted that these lab results are only trends and as with all adhesive testing it is recommended the customer prepare a testing protocol to determine the suitability of an ITW Polymers Adhesives NA product for their application and process.

TECHNICAL SERVICE REPORT

PURPOSE

An initial study to assess the Compressive Strength and Modulus of MA530 and MA560-1 adhesives occurred at the request of XXXXX under the heading of MTL-2506. When recently revisiting the data generated within MTL-2506 in response to a customer query, a flaw was identified with the initial data. Specifically, the samples were cylinders but the Instron software was calculating as if they had a square face, leading to incorrect compressive strength and moduli calculations. Thus the current study, designated as MTL-2506-B, was undertaken to create accurate data and rectify the situation.

PRODUCT OVERVIEW

Plexus® MA530 is a two-part methacrylate adhesive designed for structural bonding of thermoplastic, metal, and composite assemblies. Combined at a 1:1 ratio, MA530 has a working time of 30 to 40 minutes and reaches approximately 75% of ultimate strength in 90 to 160 minutes at 74˚F (23˚C). This product has been designed for use on large structures where a moderate open time product is needed. Plexus MA530 may be used for composite and metal bonding for small to large structures. In addition, this product provides a unique combination of excellent fatigue endurance, outstanding impact resistance, and superior toughness.

Plexus® MA560-1 is a two-part methacrylate adhesive designed for structural bonding of thermoplastic and composite assemblies. Combined at a 1:1 ratio, MA560-1 has a working time of 55 to 70 minutes and achieves approximately 600 psi and 1,000 psi in 3 and 4 hours respectively at 73°F (23°C). This product has been designed for use on composite structures where a very long open time product is needed. It is also recommended for small part assembly where fewer persons are required for an assembly and need an appropriate long working time adhesive.

PROCEDURE

Testing was conducted at ITW Polymers Adhesives North America's Technical Center in Danvers, Massachusetts. Tests were conducted on 400 ml cartridges of part number 53000 MA530 lot 403031 and part number 56000 MA560-1 lot 403181. The product was bottom filled to reduce air presence into a polyethylene mold of 0.5" diameter by 9" height. Product was allowed to cure for 24 hours at room temperature. Cured material was removed from the mold and cut into 1.0" lengths. Specimens were machined to ensure level surfaces at the top and bottom of the pieces. Five samples of each adhesive were tested after a 24 hour and 7 day room temperature (23°C) cures.

For compression strength and modulus determination the samples were tested on an Instron 8501 load frame. Data was collected on Blue Hill Series 2 software. Samples were compressed to yield point at a crosshead speed of 0.05 inches per minute and were recorded for load, compressive strength at yield, and compressive modulus.

RESULTS

Product	Cure Period (days)	Compressive Strength @ Yield (PSI)	Compressive Modulus (PSI)
MA530	1	3,467	94,427
MA530	7	4,385	132,029
MA560-1	1	2,931	93,300
MA560-1	7	4,230	127,412

Table 1: MA530 and MA560-1 Compressive Strength and Modulus Data

CONCLUSIONS

Test results are documented within the Results section for assessment by XXXXXX personnel. The results contained herein are intended to supersede the results provided within the report titled "MTL-2506". It should be noted that these lab results are only trends and as with all adhesive testing it is recommended the customer prepare a testing protocol to determine the suitability of an ITW PANA product for their application and process.

IMPORTANT INFORMATION: This report summarizes the results of certain tests conducted strictly for customers of ITW Polymers Adhesives North America as an added-value service. The results reported herein are a function of controlled laboratory conditions and may differ from the results customers might achieve under actual production and application conditions. Variations in customer production process and procedures, as well as variations in manufacturing conditions such as temperature, may affect the customer's results.

The information provided is not intended to substitute for the customers own testing results of the same materials. ITW Polymers Adhesives North America recommends that the customer perform a similar qualification by testing our products before use and to satisfy themselves as to the reports' contents and adhesive suitability for their specific application and materials. Our products are intended for sale to industrial and commercial customers. The enclosed test report does not imply any warranty or fitness for any particular application.

APPENDIX:
Copy of Original Instron Generated Data

MA530, 24 hour Compression Testing

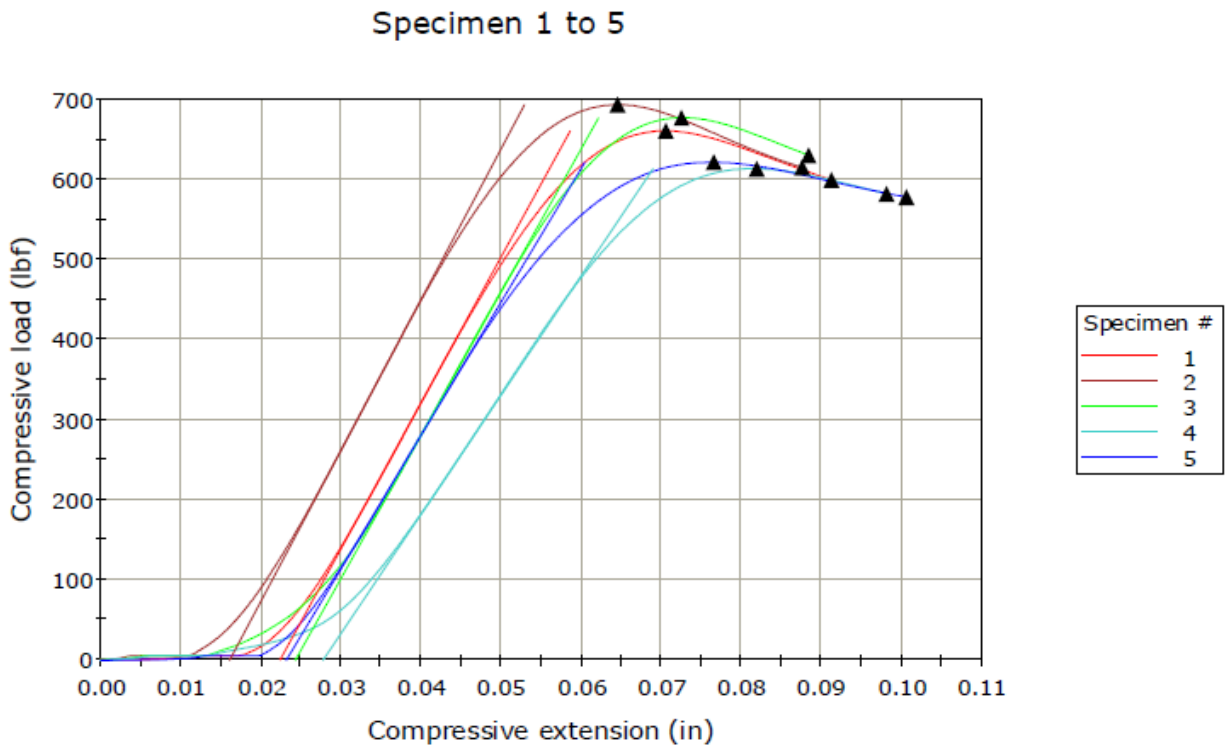

	Diameter (in)	Area (in^2)	Modulus (Automatic) (psi)	Extension at Break (Standard) (in)	Compressive Strength (psi)	Maximum Compressive load (lbf)
1		0.188	98788.266	-0.09	3506	-660.39
2		0.188	102926.846	-0.09	3680	-693.12
3		0.188	96898.080	-0.09	3593	-676.85
4		0.188	82271.413	-0.10	3256	-613.20
5		0.188	91249.499	-0.10	3299	-621.37
Mean		0.188	94426.821	-0.09	3467	-652.99
Median		0.188	96898.080	-0.09	3506	-660.39
Standard Deviation		0.00000	7987.94519	0.00585	184.25604	34.70573

MA530, 7 day Compression Testing

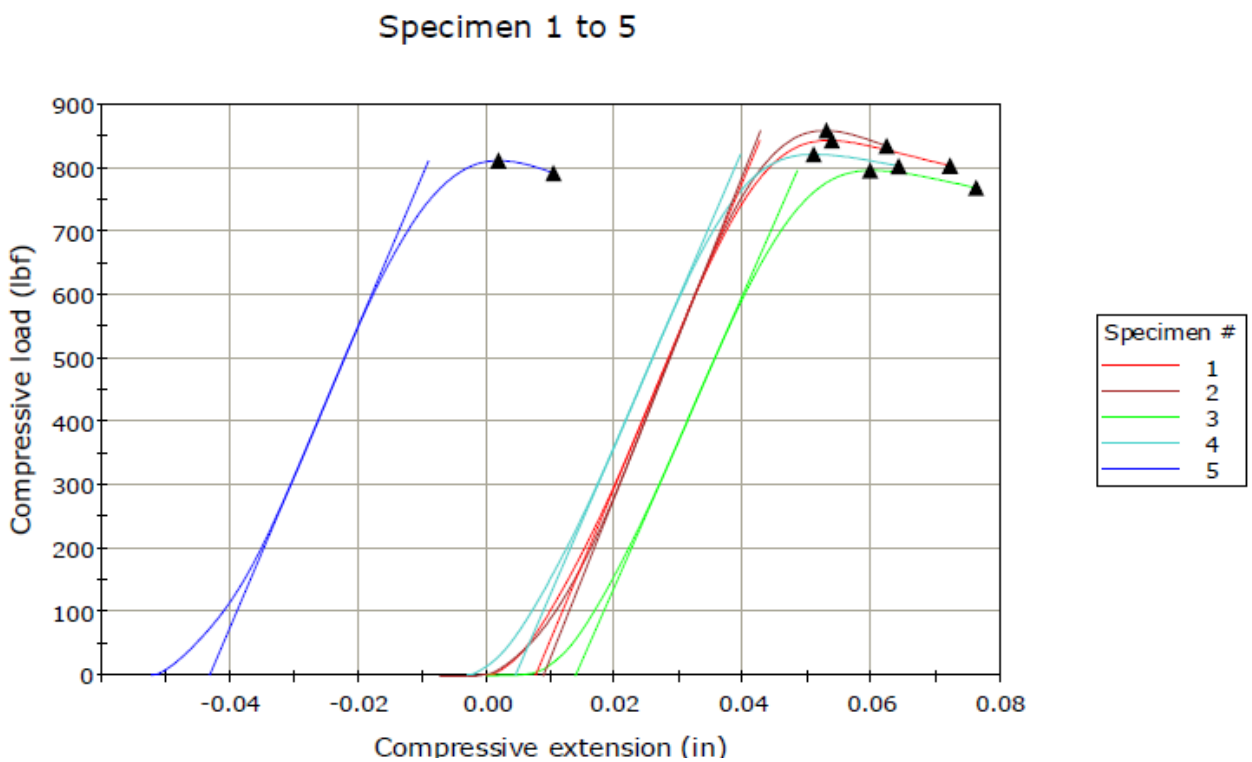

	Diameter (in)	Area (in^2)	Modulus (Automatic) (psi)	Extension at Break (Standard) (in)	Compressive Strength (psi)	Maximum Compressive load (lbf)
1		0.188	130375.716	-0.07	4476	-843.03
2		0.188	137413.925	-0.06	4558	-858.46
3		0.188	125891.818	-0.08	4225	-795.82
4		0.188	128967.471	-0.06	4360	-821.21
5		0.188	137498.587	-0.01	4306	-811.15
Mean		0.188	132029.503	-0.06	4385	-825.94
Median		0.188	130375.716	-0.06	4360	-821.21
Standard Deviation		0.00000	5212.60750	0.02667	132.67624	24.99037

MA560, 24 hour Compression Testing

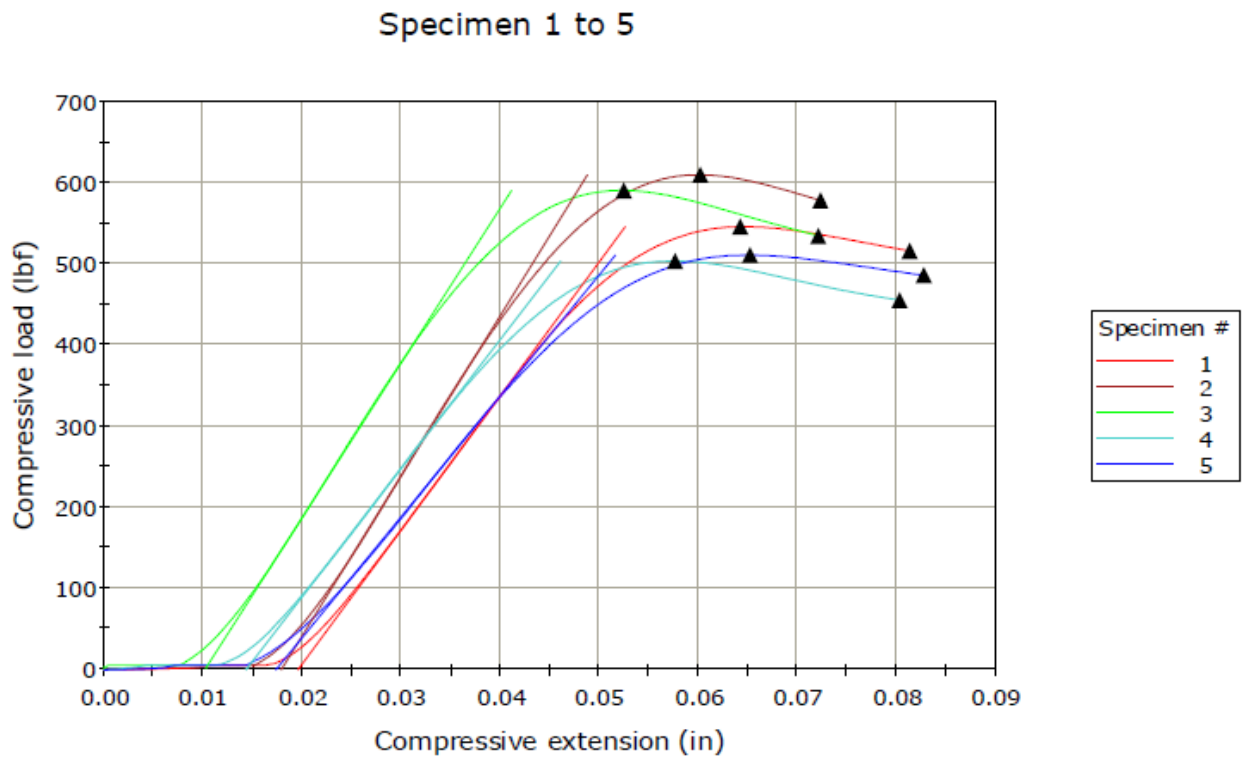

	Diameter (in)	Area (in^2)	Modulus (Automatic) (psi)	Extension at Break (Standard) (in)	Compressive Strength (psi)	Maximum Compressive load (lbf)
1		0.188	89451.200	-0.08	2897	-545.62
2		0.188	104781.870	-0.07	3236	-609.53
3		0.188	102314.200	-0.07	3134	-590.40
4		0.188	87526.511	-0.08	2673	-503.53
5		0.188	82426.106	-0.08	2712	-510.82
Mean		0.188	93299.977	-0.08	2931	-551.98
Median		0.188	89451.200	-0.08	2897	-545.62
Standard Deviation		0.00000	9740.08641	0.00514	250.02506	47.09372

MA560, 7 day Compression Testing

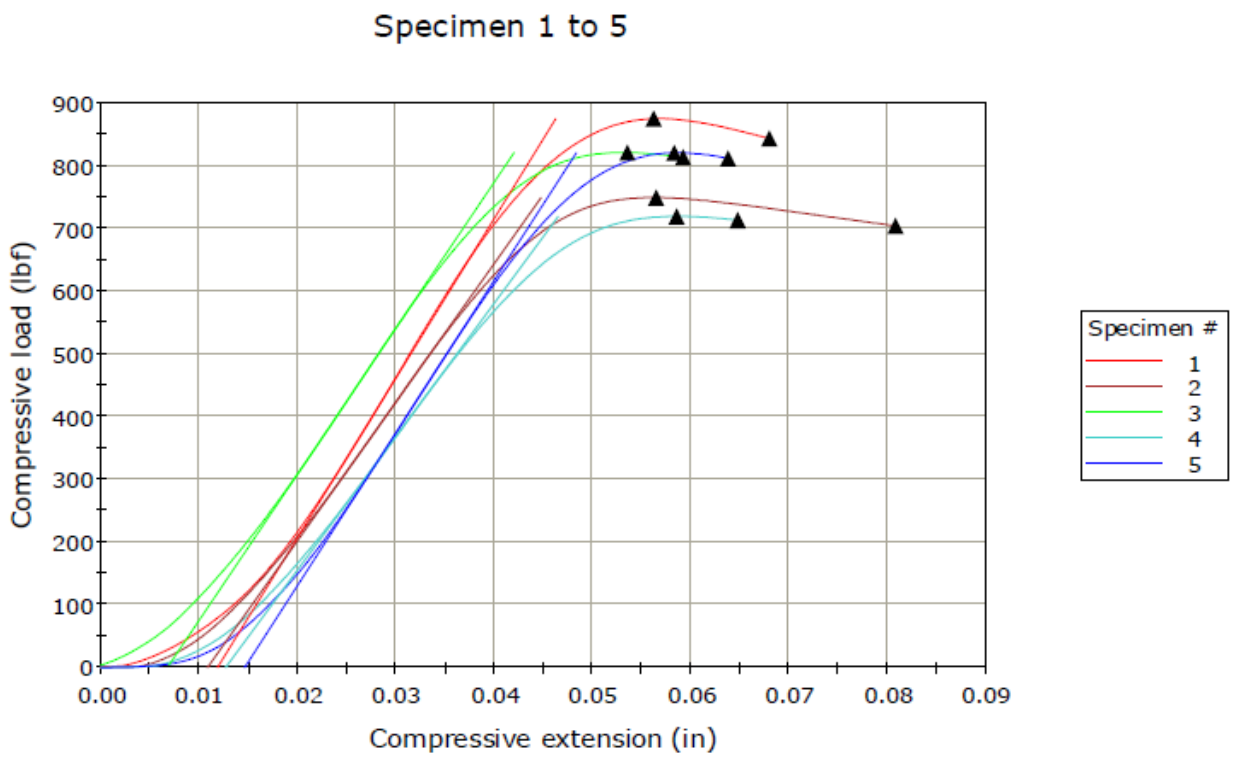

	Diameter (in)	Area (in^2)	Modulus (Automatic) (psi)	Extension at Break (Standard) (in)	Compressive Strength (psi)	Maximum Compressive load (lbf)
1		0.188	140342.940	-0.07	4643	-874.56
2		0.188	122041.076	-0.08	3977	-749.10
3		0.188	129803.116	-0.06	4357	-820.73
4		0.188	118369.832	-0.06	3818	-719.21
5		0.188	126507.272	-0.06	4355	-820.31
Mean		0.188	127412.847	-0.07	4230	-796.78
Median		0.188	126507.272	-0.06	4355	-820.31
Standard Deviation		0.00000	8431.38212	0.00817	330.14540	62.18487

INTERPLASTIC CORPORATION
Thermoset Resins Division

CORVE8100-50

Vinyl Ester Resin

Technical Data Sheet

CORVE8100-50 is a non-promoted, low viscosity, corrosion resistant vinyl ester resin for use in vacuum infusion and RTM applications. CORVE8100-50 is manufactured from ingredients listed as acceptable in the FDA Code of Federal Regulation Title 21, CFR 177.2420. This resin may be safely used as a component of articles intended for single or repeated use in contact with food as prescribed in the regulation. See "CoREZYN® Vinyl Ester Resins" publication 10/05 A-006b under CORVE8100 for corrosion recommendations and general information.

FEATURES	BENEFITS
• Moderate Laminate Exotherm	• Good cosmetic surface and minimal glass print
• Fast Trim Time	• Shorter cycle times and fast Barcol development
• Good Fiberglass Wet-Out	• Easy roll-out and high laminate physical properties
• Non-Promoted Resin System	• Allows for flexibility in timing of manufacture

LIQUID PROPERTIES	RESULTS
Viscosity, Brookfield Model LV #2 Spindle @ 60 rpm, 77°F (25°C), cps	80-120
100 grams resin @ 77°F (25°C), promoted with 0.10 gram 12% Cobalt and 0.10 gram 2,4-Pentanedione, catalyzed with 1.2% Hi-Point 90 by volume *	
Gel Time, min:sec	70:00-90:00
Gel to Peak Exotherm Time, min:sec	10:00-25:00
Peak Exotherm	340-390°F (171-198°C)
Non-Volatile Content, %	48.0-52.0
Hazardous Air Pollutant (Styrene) Content, %	48.0-52.0
Specific Gravity	1.00-1.04

TYPICAL PROPERTIES								
Thickness	**1/8 inch (3.2 mm) Casting**				**1/8 inch (3.2 mm) Laminate**			
Construction	**Not Applicable**				**4 Plies 1.5 oz/ft^2, 66% Glass Mat**			
Flexural Strength, ASTM D790	19,000	psi	131	MPa	44,900	psi	310	MPa
Flexural Modulus, ASTM D790	4.7×10^5	psi	3,241	MPa	19.6×10^5	psi	13,500	MPa
Tensile Strength, ASTM D638	11,800	psi	81	MPa	28,400	psi	196	MPa
Tensile Modulus, ASTM D638	4.9×10^5	psi	3,379	MPa	26.6×10^5	psi	18,350	MPa
Tensile Elongation, ASTM D638	4.5	%	4.5	%	1.5	%	1.5	%
Barcol Hardness, 934-1 gauge, ASTM D2583	36		36		55-60		55-60	
Heat Distortion Temperature, ASTM D648	210	°F	99	°C	--	°F	--	°C

* The gel time and reactivity will vary due to the type and concentration of Free Radical Initiator (catalyst), shop temperature, humidity, and type of fillers used. In order to meet your individual needs consult our technical sales representative for assistance.

All specifications and properties specified above are approximate. Specifications and properties of material delivered may vary slightly from those given above. Interplastic Corporation makes no representations of fact regarding the material except those specified above. No person has any authority to bind Interplastic Corporation to any representation except those specified above. Final determination of the suitability of the material for the use contemplated is the sole responsibility of the Buyer. The Thermoset Resins Division's technical sales representatives will assist in developing procedures to fit individual requirements.

INTERPLASTIC CORPORATION
2015 Northeast Broadway Street
Minneapolis, Minnesota 55413-1775
651.481.6860 Fax: 612.331.4235
www.interplastic.com

Revised: 11/06

BASF
The Chemical Company

® = registered Trademark of Ciba Holding Inc.

Tinuvin® 328

Benzotriazole UV Absorber

Characterization

Tinuvin 328 is an ultraviolet light absorber (UVA) of the hydroxyphenyl benzotriazole class, which imparts outstanding light stability to plastics and other organic substrates.

Chemical name

Phenol, 2-(2H-benzotriazol-2-yl)-4,6-bis(1,1-dimethylpropyl)

CAS number

25973-55-1

Chemical formula

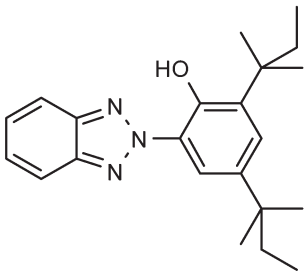

Molecular weight

352 g/mol

Applications

Tinuvin 328 is a highly effective light stabilizer for a variety of plastics and other organic substrates. Its use is recommended for the stabilization of styrene homo- and copolymers, acrylic polymers, unsaturated polyesters, polyvinyl chloride, polyolefins, polyurethanes, polyacetals, polyvinyl butyral, elastomers, and adhesives.

Features/benefits

Tinuvin 328 features strong UV absorption, low initial color, excellent compatibility in a wide vari-ety of substrates, good solubility in plasticizers and monomers, and moderately low volatility. It protects polymers as well as organic pigments from UV radiation, helping to preserve the original appearance and physical integrity of molded articles, films, sheets, and fibers during outdoor weathering.

Product forms

Tinuvin 328	Slightly yellow powder
Tinuvin 328 FF	Slightly yellow, free-flowing granules

Guidelines for use

The use levels of Tinuvin 328 range between 0.1 and 1.0%, depending on substrate and performance requirements of the final application. Tinuvin 328 can be used alone or in combination with other functional additives such as antioxidants (hindered phenols, phosphites) and HALS light stabilizers, where often a synergistic performance is observed. Performance data for Tinuvin 328 alone and in combination with other additives are available in a variety of substrates.

Physical Properties

Melting Range	80 – 88 °C
Flashpoint	229 °C
Specific Gravity (20 °C)	1.17 g/ml
Vapor Pressure (20 °C)	4.7 E-6 Pa

Solubility (20 °C)	**g/100 g solution**
Acetone	6
Benzene	39
Chloroform	44
Cyclohexane	15
Ethyl acetate	16
n-Hexane	16
Methanol	0.4
Water	< 0.01

Volatitility (pure substance; TGA, heating rate 20 °C/min in air)

Weight Loss %	Temperature °C
1.0	183
2.0	202
5.0	223

Absorbance spectrum
(10 mg/l, Chloroform)

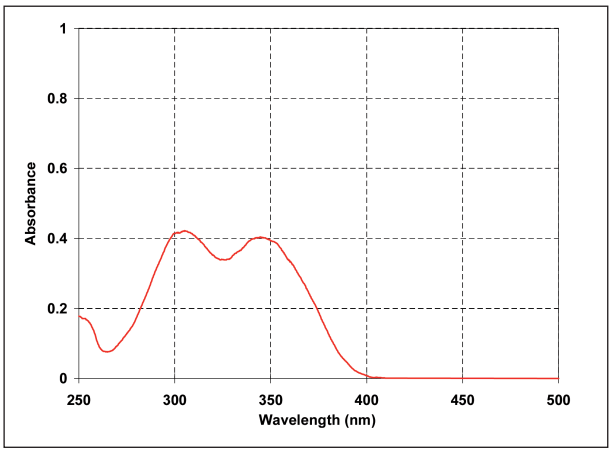

Tinuvin 328 exhibits high absor-bance in the 300-400 nm region and minimal absorbance in the visible region (> 400 nm) of the spectrum. The absorption maxima are at 306 nm and 347 nm (ε = 14'760 l/mol · cm) in chloro-form solution.

Handling & Safety

Tinuvin 328 exhibits a very low order of oral toxicity and does not present any abnormal problems in its handling or general use.

Detailed information on handling and any precautions to be observed in the use of the product(s) described in this leaflet can be found in our relevant health and safety information sheet.

Note

The descriptions, designs, data and information contained herein are presented in good faith, and are based on BASF's current knowledge and experience. They are provided for guidance only, and do not constitute the agreed contractual quality of the product or a part of BASF's terms and conditions of sale. Because many factors may affect processing or application/use of the product, BASF recommends that the reader carry out its own investigations and tests to determine the suitability of a product for its particular purpose prior to use. It is the responsibility of the recipient of product to ensure that any proprietary rights and existing laws and legislation are observed. No warranties of any kind, either expressed or implied, including, but not limited to, warranties of merchantability or fitness for a particular purpose, are made regarding products described or designs, data or information set forth herein, or that the products, descriptions, designs, data or information may be used without infringing the intellectual property rights of others. Any descriptions, designs, data and information given in this publication may change without prior information. The descriptions, designs, data and information furnished by BASF hereunder are given gratis and BASF assumes no obligation or liability for the descriptions, designs, data or information given or results obtained, all such being given and accepted at the reader's risk.

August 2010

BASF Schweiz AG
Performance Chemicals/Plastic Additives
Klybeckstrasse 141
4057 Basel, Switzerland

ADVANCE COATINGS COMPANY
Resins, Coatings and Adhesives
WESTMINSTER, MA 01473 · TEL: 978-874-5921

A-8-14265 FEDERAL STANDARD GRAY PIGMENT DISPERSION

INTRODUCTION:

Advance Coatings Company produces quality dispersions formulated for a given end use. Our dispersions are designed for epoxies, polyurethane's and unsaturated polyesters and it is our policy to keep abreast of all new developments pertaining to these applications. By so doing, we are in a position to intelligently recommend the dispersion applicable to each customer's formulation. This pigment dispersion is a color match to the Federal Starndard 26357.

GENERAL

Advance Coatings Company dispersions are formulated in a reactive resin vehicle, that becomes a part of the structure when catalyzed and cured, and has a can stability of approximately one-year at ambient temperature. The same colors can be produced in alternate vehicles which will be considered upon request.

Advance Coatings Company dispersions are a product of quality ingredients, constant research and ever watchful quality control. It is important to know that we use various types of equipment to produce our dispersions, resulting in thoroughly wetted pigments with the fabricator obtaining in his finished parts the following outstanding characteristics:

Higher Gloss
Maximum Weatherability
Uniformity of color
Reduced Air Entrapment Due to Pigment

By combining selected standard dispersions, the fabricator can create his own special colors, and eliminate costly, custom color matches. The recommended base colors for implant color matching are white, red, yellow, green, blue, and black. Special color formulations will be matched at an additional charge.

Advance Coatings Company pigment dispersions are primarily based on inorganic pigments, which offer the greatest light stability. Organic pigmented has greater brilliance of color, but poorer light stability. In many cases, to obtain the desired color, we use organic pigments, but have limited their use to reds, blues, and greens. We are, however, careful to select the lightest stable organic pigments available.

SUGGESTED USAGE PROCEDURES FOR ADVANCE COATINGS COMPANY PIGMENT DISPERSIONS ARE:

SHEET APPLICATIONS:

The greater the amount of colors dispersions used in sheet applications, the deeper the opacity. Only white and grays, when used as high as 10%, will give an opaque sheet at 1/16th of an inch thick. Reds, yellows, greens, blues, and browns need extender pigments in the formulation to give opacity. These dispersions, when used alone as high as 20%, will still give a translucent effect. We recommend that thixothropic types of dispersions, blues and greens, be thinned first with styrene monomer or the polyester resin to two or three times their volume before being added to the entire batch. This reduces the mixing time of incorporating the color into the master batch.

SANITARY WARE PIGMENTS:

Dispersions are available that match the colors of all major manufacturers of bathroom fixtures.

PRE-FORM MATCH METAL MOLDING FORMULATIONS:

Add the color dispersions to the mixing tank first. Slowly add ½ of the resin required. While this mixture is agitating, add all of the extender pigments or fillers. Allow mixing to a smooth consistency. This is to wet out the extender pigment and develop the hiding power of the color. The heavier the mix, the deeper will be the color development. Then thin with the remaining resin and allow mixing for 15 minutes. If clays are used in the formulation, a longer period of mixing is required to develop a color. When the batch is ready for molding, we advise that it be filtered through a paint filter or wire mesh screen to eliminate any agglomeration of extender pigments.

PRE-MIX FORMULATIONS:

Into a Baker Perkins type mixer, pour 1/3 to 1/2 of the resin. Then add catalyst and all of the color required for your molding compound. Start mixer and slowly add all extender or filler pigments. The heavier the dough you knead at this time, the greater will be the color development. After all, of the extender pigments are incorporated, stop the mixer and brush down any loose particles clinging to the mixer walls. Start mixer, and gradually add the remaining resin to the batch, then add the fibrous reinforcement. Mix until you have arrived at the desired consistency. Excessive mixing could result in the degradation of the fiber reinforcement.

A 100 SERIES WHITE PIGMENT DISPERSION

A100, A101

TITANIUM DIOXIDE WHITE PIGMENT DISPERSIONS

Titanium dioxide white dispersions are based on Rutile titanium dioxide. They exhibit excellent resistance to acids and alkalis as well as excellent tinting strength and non-yellowing properties.

A 200 SERIES RED PIGMENT DISPERSIONS

A 200, A201, A202, A204

MERCADIUM RED DISPERSIONS

Mercadium red dispersions are based on calcined pigments made by combing sulphides or mercury and cadmium into a mixed crystal. The undertone ranges from light red to maroon. They exhibit excellent resistance to acids and alkalis as well as excellent exterior film durability.

A220, A221, A222, A223, A224

CADMIUM RED DISPERSIONS

Cadmium red dispersions are based on coprecipitated cadmium sulphide and barium sulfate with varying amounts cadium selenide. The undertune ranges from light red to maroon. They exhibit excellent resistance to acids and alkalis as well as excellent exterior film durability.

A260, A261, A262, A263

QUINACRIDONES RED DISPERSIONS

Quinacridones red dispersions are used over other toning reds for light stable tints when added to white. They exhibit good chemical resistance but are attacked by some oxidizing agents. Wesuggest that you test in your system for approval.

1 300 SERIES ORANGE PIGMENT DISPERSIONS

A300, A301, A302

MOLYBDATE ORANGE DISPERSIONS

Molybdate orange dispersions are based on crystals of lead chromate, lead sulfate and lead molybdate. The undertone ranges from yellow to red shades of orange. They are clean in color with high hiding power and impart excellent film durability.

MATERIAL PROPERTIES

Pultex® Fiber Reinforced Polymer Structural Profiles
Rectangular Tubes, Channels, Angles, Square Tubes, Round Tubes

***Includes all angles except 4" x 1/4", 4" x 3/8", 6" x 3/8" and 6" x 1/2", which are* SuperStructurals.**
Please consult the Pultex® Fiber Reinforced Polymer* SuperStructural *Profiles Angles Material Properties

1500 Series - Thermoset Polyester – Olive Green
1525 Series - Thermoset Polyester Class 1 FR – Slate Gray (Dark Gray)
1625 Series - Thermoset Vinyl Ester Class 1 FR – Beige

The following data was derived from ASTM coupon and full section testing. The results are average values based on random sampling and testing of production lots. Composite materials are not homogeneous; and therefore, the location of the coupon extraction can cause variances in the coupon test results. Creative Pultrusions publishes an average value of random samples from production lots.

Property (coupon values)	ASTM Test	Units	1500/1525 Series	1625 Series
Mechanical				
Tensile Strength (LW)	D638	psi	33,000	37,500
Tensile Strength (CW)	D638	psi	7,500	8,000
Tensile Modulus (LW)	D638	10^6 psi	2.5	3.0
Tensile Modulus (CW)	D638	10^6 psi	0.8	1.0
Compressive Strength (LW)	D695	psi	33,000	37,500
Compressive Strength (CW)	D695	psi	16,500	20,000
Compressive Modulus (LW)	D695	10^6 psi	3.0	3.0
Compressive Modulus (CW)	D695	10^6 psi	1.0	1.2
Flexural Strength (LW)	D790	psi	33,000	37,500
Flexural Strength (CW)	D790	psi	11,000	*12,500*
Flexural Modulus (LW)	D790	10^6 psi	1.6	2.0
Flexural Modulus (CW)	D790	10^6 psi	0.8	1.0
Modulus of Elasticity	Full Section[2]	10^6 psi	2.8-3.2	2.8-3.2
(Channels)	Full Section[2]	10^6 psi	2.8	2.8
(Square and Rectangular Tubes)	Full Section[2]	10^6 psi	3.2	3.2
Shear Modulus	Full Section[2]	10^6 psi	0.42	0.42
Interlaminar Shear (LW)[3]	D2344	psi	4,500	4,500
Shear Strength By Punch (PF)	D732	psi	5,500	6,000
Notched Izod Impact (LW)	D256	ft-lbs/in	28	30
Notched Izod Impact (CW)	D256	ft-lbs/in	4	5
Maximum Bearing Strength (LW)	D953	psi	30,000	30,000
Maximum Bearing Strength (CW)	D953	psi	18,000	18,000
Poisson's Ratio (LW)	D3039	in/in	0.35	0.35
Poisson's Ratio (CW)	D3039	in/in	0.15	0.15
In-plane Shear (LW)	Modified D2344[4]	psi	7,000	7,000

LW = lengthwise CW = crosswise PF = perpendicular to laminate face

Additional properties located on back.

CREATIVE PULTRUSIONS

CREATIVE PULTRUSIONS, INC.
214 Industrial Lane, Alum Bank, PA 15521
814.839.4186 · Fax: 814.839.4276 · Toll free 888.CPI.PULL
Email: crpul@pultrude.com · www.creativepultrusions.com

Creative Pultrusions, Inc. reserves the right to edit and modify literature, please consult the web site for the most current version of this document.

PSS01I-0399r7.50
Revision Date: 07.02.13

MATERIAL PROPERTIES

Pultex® Fiber Reinforced Polymer Structural Profiles
Rectangular Tubes, Channels, Angles, Square Tubes, Round Tubes
(cont'd)

Includes all angles except 4" x 1/4", 4" x 3/8", 6" x 3/8" and 6" x 1/2", which are SuperStructurals.
Please consult the Pultex® Fiber Reinforced Polymer SuperStructural Profiles Angles Material Properties

Property (coupon values)	ASTM Test	Units	1500/1525 Series	1625 Series
Physical				
Barcol Hardness[1]	D2583		45	45
Water Absorption	D570	% Max	0.6	0.6
Density	D792	lbs/in^3	0.060-0.070	0.060-0.070
Specific Gravity	D792		1.66-1.93	1.66-1.93
Coefficient of Thermal Expansion (LW)	D696	10^{-6}in/in/°F	4.4	4.4
Thermal Conductivity (PF)	C177	BTU-in/ft^2/hr/°F	4	4
Electrical				
Arc Resistance (LW)	D495	seconds	120	120
Dielectric Strength (LW)	D149	KV/in	40	40
Dielectric Strength (PF)	D149	volts/mil	200	200
Dielectric Constant (PF)	D150	@60Hz	5.2	5.2

[1] Pultex® uses a synthetic surface veil that reduces the Barcol Hardness, but does not reflect lack of cure.
[2] Full section testing based on a 3-point bend with simply supported end conditions (Reference The *New and Improved* Pultex® Pultrusion Global Design Manual, Appendix B, for details).
[3] Tested on a 3:1, span to depth ratio.
[4] Follow ASTM D2344, but rotate coupon 90° (cut section of coupon length faces up).
[5] In-plane Shear (CW) values for square tubes and rectangular tubes = 2,500psi; angles = 3,800psi.

	ASTM Test	Value	Value
Property		**1525**	**1625**
Flammability Classification	UL94	(VO)	(VO)
Tunnel Test	ASTM E-84	25 Max	25 Max
Flammability Extinguishing	ASTM D635	Self extinguishing	Self extinguishing
NBS Smoke Chamber	ASTM E662	650	650

Creative Pultrusions, Inc. believes the information put forth in this property sheet to be as accurate and reliable as of the date of publication. However, we assume no obligation or liability which may arise as a result of its use. While Creative Pultrusions, Inc. has no knowledge that the information put forth infringes any valid patent, it assumes no responsibility with respect thereto and each user must satisfy oneself that one's intended application process or product infringes no patent.

"No portion of this Material Properties Sheet may be reproduced in any form without the prior written consent of Creative Pultrusions, Inc."

Copyright © 2007 by

Creative Pultrusions, Inc.

All Rights Reserved
Flowgrip® and Pultex® are registered trademarks of Creative Pultrusions, Inc. Creative Pultrusions™, Shaping the Future™, Superstud™, Superstud™/Nuts!, Superstik™, SUPURTUF™, Superplank™, Superdeck™, Supergrate™, Tuf-dek™, SuperLoc™, SuperWale™, SuperCap™, SuperRod™, Pultrusion Dynamics™, DYNAPUL™, Pulshaping™, TOPSCAN™ and TOPDIE™ are trademarks of Creative Pultrusions, Inc.

PREFERRED FOAM PRODUCTS, INC.
"Specialists in Urethane Foam"
(860) 669-3626 • FAX (860) 664-4919

23-008(2)

04/05/13

Product Data Sheet

Description:
23-008(2) is a two component, HFC-245fa blown, all PMDI based low density pour-in-place rigid urethane foam system. Contains no CFC's or HCFC's

Proposed uses:
Use as a panel fill, pre-insulated pipe, or other void filling applications. 23-008(2) has been formulated for use where Building Codes specify 25 Flame Spread and less than 450 Smoke Density per ASTM E-84 at 4-inch thickness and applications that require Mil-P-21929C(1). The relatively low viscosities of the components make this product suitable for use in PFPI urethane dispensing equipment.

DISTINGUISHING CHARACTERISTICS:

- High R-Value, low k-factor
- Premium Cure and Demold Properties
- High Closed Cell Content
- Good Dimensional Stability
- Meets ASTM E-84, FS≤25, SD≤450 at 4 inch Thickness
- Meets Mil-P-21929C(1)

TYPICAL RESIN PROPERTIES:

	23-008(2) R	23-008 A
Viscosity @ 72°F	600 cps	200 cps
Weight Per Gallon	10.2 lbs.	10.2 lbs.
Appearance	transparent brown liquid	transparent brown liquid
Shelf Life	6 months	6 months

MIX RATIO:

	23-008 R	23-008 A
Ratio by Weight	100 parts	100 parts
Ratio by Volume	100 parts	100 parts

TYPICAL REACTION PROPERTIES:

Hand-mixed @72° F

Cream time, seconds	16
Gel time, seconds	84
Tack Free Time, seconds	120
Rise time, seconds	155
Density, pcf	1.95

Typical Physical Properties (Packed Panel):

Core Density ASTM D 1622	2.7 pcf
Comprehensive Strength ASTM D 1621	37 psi
Tensile Strength ASTM D 1623	58 psi
Shear Strength ASTM C 273	32 psi
Moisture Vapor Transmission ASTM E 96	2-3 perm-in
Closed Cell Content ASTM D 2856	≥93%
k – Factor, aged in metal panel ASTM C 518	0.155 Btu·in/ (hr·ft² · °F)

Dimensional Stability, volume Δ

	@-40°F	@200° F	@158°F, 95% RH
14 days	-0.1%	2.7%	5.2%

ASTM D 2126

Maximum Service Temperature	180°F
Flammability, ASTM E-84,	4 inch
Flame Spread	≤25
Smoke Dev	≤450

Note: The above values are average values obtained from laboratory experiments in a packed panel and should serve only as guide lines.

PFPI 23-008(2) APPLICATION INFORMATION

EQUIPMENT AND COMPONENT RATIOS:

PFPI 23-008(2) should be mixed by pour machines designed to mix urethane chemicals. It is recommended that this system be processed with PFPI Urethane Dispensing Equipment. Recommended component temperatures of 80° F –95° F.
PFPI 23-008 **R** is connected to the **resin/polyol** "B" with PFPI A or 23-008 **A** being connected to the **isocyanate** "A".

MOLDING RECOMMENDATION:

To obtain optimum yield, consistent part quality and quick demold times, the mold temperature must be 80° F or higher. Recommended temperature is 100° F. heating molds with radiant or convection heat sources should be accomplished without producing 'hot spots'. Molds may be constructed of fiberglass aluminum, epoxy or other thermal conductive material. Mold surfaces must be coated with a suitable release agent and dried before molding. Follow the recommendations of the mold release supplier. The mold design should offer adequate clamping pressure and allow trapped air to escape through vent holes in the top or the parting lines of the mold.

STORAGE AND USE OF CHEMICALS:

Keep temperature of chemicals at 85° F for several days before use. Cold chemicals can cause poor mixing, off ratio or other process problems due to higher viscosity at lower temperatures. Storage temperature should not exceed 95° F. Prolonged exposure to temperatures below 50° F can cause the 'A' component to freeze. Do not store in direct sunlight. Keep tanks tightly closed when not in use and under nitrogen pressure of 2 – 3 psi minimum.

PFPI 23-008(2) APPLICATION INFORMATION

SAFE HANDLING OF LIQUID COMPONENTS:
Avoid prolonged breathing of vapors. In case of chemical contact with eyes, flush with water for at least 15 minutes and get medical attention. For further information refer to "MDI-Based Polyurethane Foam Systems: Guidelines For Safe Handling and Disposal" publication AX-119 published by the Center for the Polyurethanes Industry 1300 Wilson Blvd., Suite 800, Arlington, VA 22209.

Caution:
Polyurethane products manufactured or produced from this liquid system may present a serious fire hazard if improperly used or allowed to remain exposed or unprotected. The character and magnitude of any such hazard will depend on a broad range of factors which are controlled and influenced by the manufacturing and production process, by the mode of application or installation and by the function and usage of the particular product. ***Any flammability rating contained in this literature is not intended to reflect hazards presented by this or any other material under actual fire conditions. These ratings are used solely to measure and describe the product's response to heat and flame under controlled laboratory conditions.*** Each person, firm or corporation engaged in the manufacture, production, application, installation or use of any polyurethane product should carefully determine whether there is a potential fire hazard associated with such product in a specific usage, and utilize all appropriate precautionary and safety measures.

Shelf Life:
Shelf life of System 23-008(2), "A" and "B" components, is six months from the date of manufacture when stored in original unopened containers at temperatures between 50°and 74°F.

Note:
The information data and products presented herein are based upon information reasonably available to Preferred Foam Products, Inc. (PFPI) at the time of publication and are presented in good faith. PFPI warrants that only the material shall be of merchantable quality; this warranty is in lieu of all other written or unwritten, expressed or implied warranties, and PFPI expressly disclaims any warranty for a particular purpose or freedom from patent infringement. Accordingly, Buyer assumes all risks whatsoever as to the use of these materials and Buyer's exclusive remedy as to any price of materials or the use thereof. You should thoroughly test any application and independently determine satisfactory performance before commercialization.

Warning:
Polyurethane products manufactured or produced from these chemicals may present a serious fire hazard if improperly used or allowed to remain exposed or unprotected. The character and magnitude of any such hazard will depend upon a broad range of factors which are controlled and influenced by the manufacturing or production process, by the mode of application or product. Each person, firm or corporation engaged in the manufacture, production, application, installation, or use of any polyurethane product should carefully determine whether there is a potential fire hazard associated with the use or application of this product. All precautionary and/or safety measures should be implemented.

Preferred Foam Products, Inc.
140 Killingworth Turnpike
P.O. Box 942
Clinton, CT 06413

PERGAMON

International Journal of Impact Engineering 24 (2000) 703–731

INTERNATIONAL JOURNAL OF IMPACT ENGINEERING

www.elsevier.com/locate/ijimpeng

Two-dimensional response of crushable polyurethane foam to low velocity impact

V.P.W. Shim*, Z.H. Tu, C.T. Lim

Impact Mechanics Laboratory, Department of Mechanical and Production Engineering, National University of Singapore, 10 Kent Ridge Crescent, Singapore 119260

Received 22 April 1999; received in revised form 2 September 1999

Abstract

An experimental and numerical study of the two-dimensional response of crushable foam to low velocity impact is undertaken. Rigid polyurethane foam blocks are subjected to normal impact by gravity-driven impactors of different geometries, at velocities ranging from 2 to 4 m/s. The impactors comprise a rectangular block, a wedge-tipped block and a cylinder. Quantities measured during impact are the impactor deceleration, velocity and displacement, and the energy dissipated. The effects of impact velocity and geometry on the deformation and energy absorbed are studied. A two-dimensional numerical model is proposed to simulate the gross deformation induced in the impact process. It employs a lumped mass approach and is formulated in terms of finite deformation. Appropriate equations of motion, stress–strain relations, failure criteria and failure patterns are developed. Results generated by this model exhibit good correlation with experiments, thus substantiating its validity. The proposed model demonstrates advantages over traditional finite element approaches, in that it accommodates severe deformation and extensive structural failure without the problems of excessive mesh distortion and untenable time step reduction which accompany finite element simulations. © 2000 Elsevier Science Ltd. All rights reserved.

1. Introduction

Cellular materials are made up of interconnected networks of solid struts or walls interspersed by voids. They are commonly used in shock absorption applications such as packaging and cushioning because of their effectiveness in absorbing impact energy and mitigating collision damage while limiting force levels. In these applications, cellular materials are usually subjected to

* Corresponding author.

0734-743X/00/$ - see front matter © 2000 Elsevier Science Ltd. All rights reserved.
PII: S0734-743X(99)00149-9

Nomenclature

$A(i,j)$	connection between node (i,j) and $(i+1,j)$
$B(i,j)$	connection between node (i,j) and $(i,j+1)$
C	Rayleigh damping factor
d	impactor displacement
$\mathbf{E}$	Cauchy–Green strain tensor
$\Delta E(t)$	energy dissipated at time t
$\mathbf{F}$	deformation gradient tensor
$\mathbf{I}$	unit matrix
I	number of horizontal elements (mass points)
J	number of vertical elements (mass points)
K	Young's modulus
m	mass of node
M	mass of impactor
$\mathbf{n}$	unit normal to a face
p	pressure
R	radius of cylinder
$\mathbf{S}, \mathbf{s}$	initial, deformed face of an element
t	time
$\mathbf{T}$	force on a face
$\mathbf{u}$	node position
Δt	integration time step
$\Delta V(t)$	volume crushed at time t
W	width of impactor
ΔX	width of element
ΔY	height of element
Z	thickness of specimen
α, β	artificial damping coefficients
γ	shear strain
ε^e	engineering strain
ε_d	strain at the onset of densification
ε_l	maximum compressive strain
ε_t	tensile breaking strain
ε_y	compressive yield strain
λ	stretch
ν	ratio of transverse to longitudinal deformation
ρ	density of polyurethane foam
τ	shear stress
σ	Cauchy stress tensor
σ^e	engineering stress
$\mathbf{\Sigma}$	the second Piola–Kirchoff stress

low-velocity impacts associated with drops and low-speed bumps. Impacts occur in arbitrary directions and the geometry of the colliding object can be complex, thus giving rise to a multi-dimensional load situation. To analyse such cases, an understanding of the response of a material to uniaxial loading is insufficient; there is a need to examine behaviour under multi-axial loads.

The present study focuses on the two-dimensional impact response of crushable polyurethane foam, particularly with regard to the deformation induced and the energy dissipation characteristics. Rigid steel impactors of three geometries — rectangular, cylindrical and wedge-tipped — are dropped from various heights onto foam blocks. The resulting deformation and damage profiles are noted and the dynamic response of the impactor, in terms of velocity, acceleration, displacement and kinetic energy lost, are analysed. In conjunction with the experiments, a two-dimensional lumped mass numerical model [1] is proposed to describe the impact response. The model is formulated in terms of finite deformation and accommodates severe deformation and extensive structural failure, which are usually experienced by crushable foam. Numerical results obtained from this model are then compared with experimental results.

2. Polyurethane foam under investigation

The polymeric foam used in this study is fabricated by blending together two constituents — Daltofoam and Suprasec — in the presence of a blowing agent. This produces a rigid polyurethane foam with a density of 25.6 kg/m^3. Microscopic examination of the resulting internal structure reveals that it comprises both open and closed cells, the latter accounting for the major portion. The average cell size is about 0.6 mm. Static mechanical properties of the foam are determined via uniaxial compression, uniaxial tension and simple shear tests (Table 1). Uniaxial compression of foam specimens engenders three phases of response — initial linear elasticity, a protracted plastic collapse plateau and final densification (Fig. 1). Such behaviour is common to cellular materials [2,3]. A prominent feature is that there is a drop in stress at the commencement of the plateau phase. Compression, followed by unloading and then by tensile loading (Fig. 1), shows that the compressive stress decreases sharply during unloading before the specimen sustains a tensile load. A small applied tension is sufficient to cause it to recover most of its original volume

Table 1
Physical and mechanical properties of polyurethane foam

Properties of polyurethane foam	
Density (kg/m^3)	25.6
Elastic modulus (MPa)	2.78
Shear modulus (MPa)	0.84
Plateau stress (MPa)	0.12
Compressive yield strain	5%
Strain at onset of densification	80%
Maximum tensile strain	5%
Maximum shear strain	10%

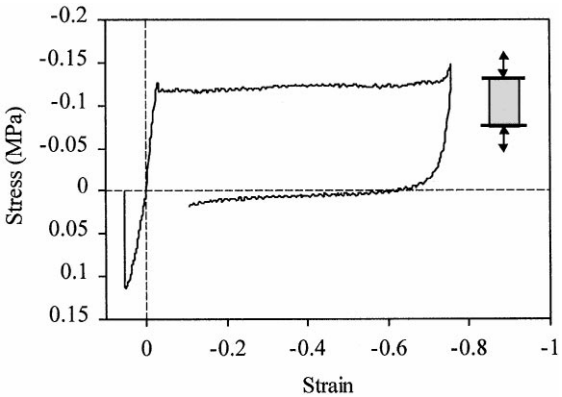

Fig. 1. Stress–strain response for uniaxial tension, and compression with unloading.

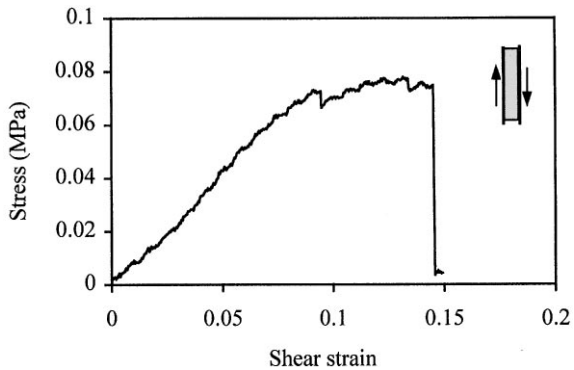

Fig. 2. Stress–strain relationship for simple shear.

before the specimen breaks. This demonstrates that once crushed, the material is incapable of sustaining any significant tensile load. The stress–strain relationship for simple shear is essentially linear (Fig. 2).

3. Impact deformation of foam blocks

3.1. Experimental arrangement

Foam specimens are subjected to impact deformation using the drop-tower arrangement shown in Fig. 3. The impactor is attached to a slider block connected to a lifting carriage which raises the assembly to the desired height. At the required height, the impactor and sliding block are uncoupled and fall under gravity between two vertical guides. The impact velocity is measured by a pair of diode lasers sited along the path of the impactor, just above the specimen. Sequential interruption of the laser beams by the falling impactor triggers the starting and stopping of a counter-timer. The impact velocity is determined from the elapsed time and the spacing between the laser beams. Deceleration of the impactor is obtained via a piezoelectric accelerometer rigidly mounted onto the top of the slider block. The accelerometer output is fed to a charge amplifier and captured by a digital storage oscilloscope. The digitised data is then transferred via floppy disc to a personal computer for post-processing, to yield impactor velocity, displacement and energy as functions of time. A square grid is also marked onto the front face of specimens, to facilitate visualisation of resultant deformation patterns and to aid calculation of the volume of material crushed.

Three impactors are used — a rectangular block, a cylinder and a wedge-tipped block (Fig. 4). The rectangular block has a width of 5 cm and a height of 10 cm; the cylinder has a radius of 5 cm and makes circumferential contact with the specimens. The wedge-tipped impactor has a 90° wedge angle and a 5 cm wide shank. All three impactors have a common mass of 6 kg. The foam block specimens used are rectangular and measure 200 mm in width, 100 mm in height and are 57 mm

NOT FOR PRODUCTION - DESIGN DRAWING ONLY

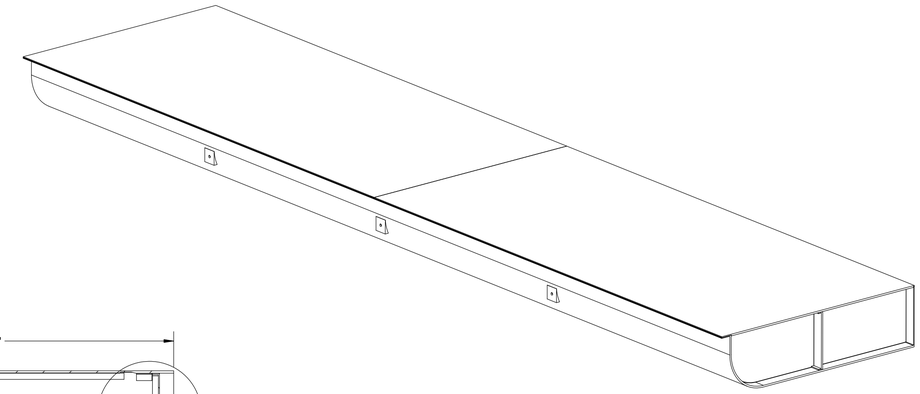

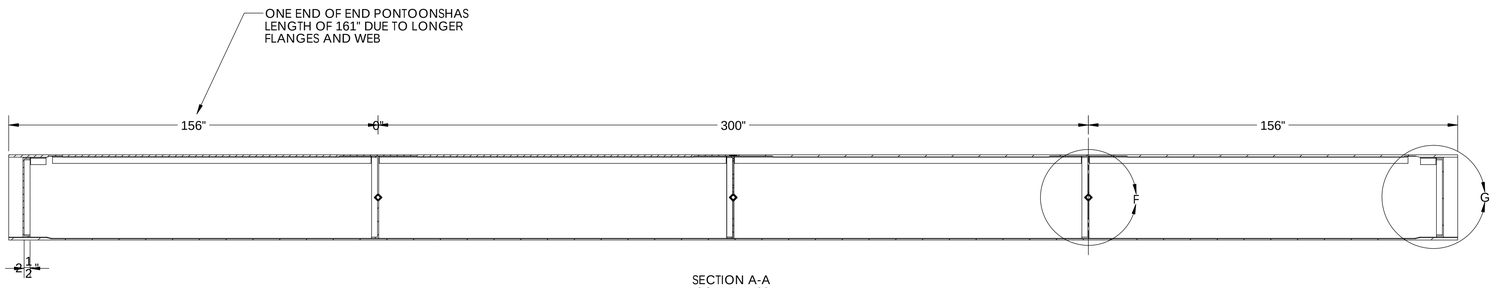

SECTION A-A
SCALE 1 : 32

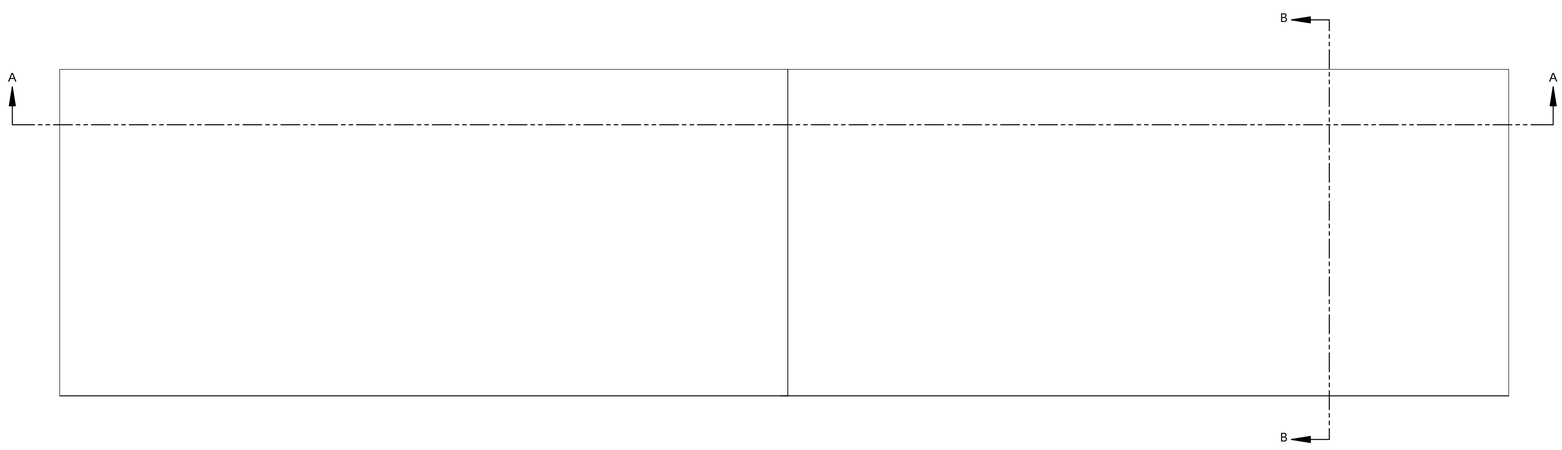

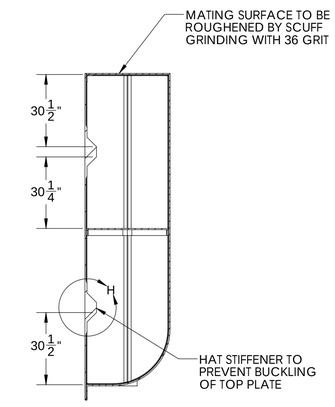

SECTION B-B
SCALE 1 : 32

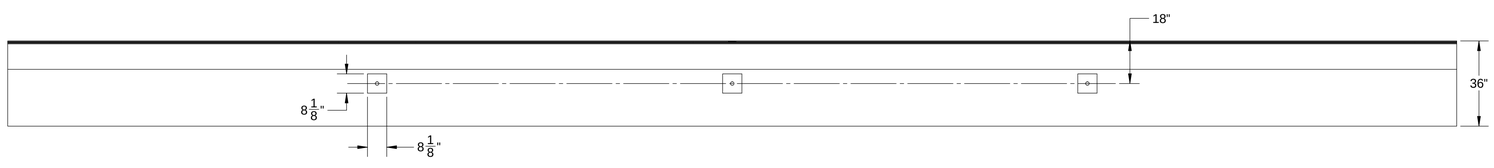

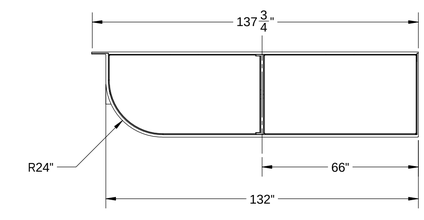

KENWAY CORP.

REV	DESCRIPTION	DATE
1	ADDED NOTE TO END BAY DIMENSION	5/1/14
2	CHANGED BLISTER TO 8-1/8 X 8-1/8	5/13/14

SEAL

DIMENSIONS ARE IN INCHES
TOLERANCES: +0, -1/16"
FRACTIONAL ±
ANGULAR: MACH ± BEND ±
TWO PLACE DECIMAL ±
THREE PLACE DECIMAL ±

DRAWN BY	DATE
JM	4/17/14
CHKD BY	DATE
XX	X/X/XX

PROJECT: BROOKFIELD FRP PONTOONS

CUSTOMER: MILLER CONST. / VTRANS

SHEET: STANDARD PONTOON GENERAL ARRANGEMENTS

WEIGHT: 12,644 lb

DESCRIPTION: DESIGN DWG

SCALE 1 : 32

WO NO. 8420

CONTRACT NO. 9185

DWG NO. 8420-1

SHEET 1 OF 5

PONTOON	PART NO.
N/A	N/A

NOT FOR PRODUCTION - DESIGN DRAWING ONLY

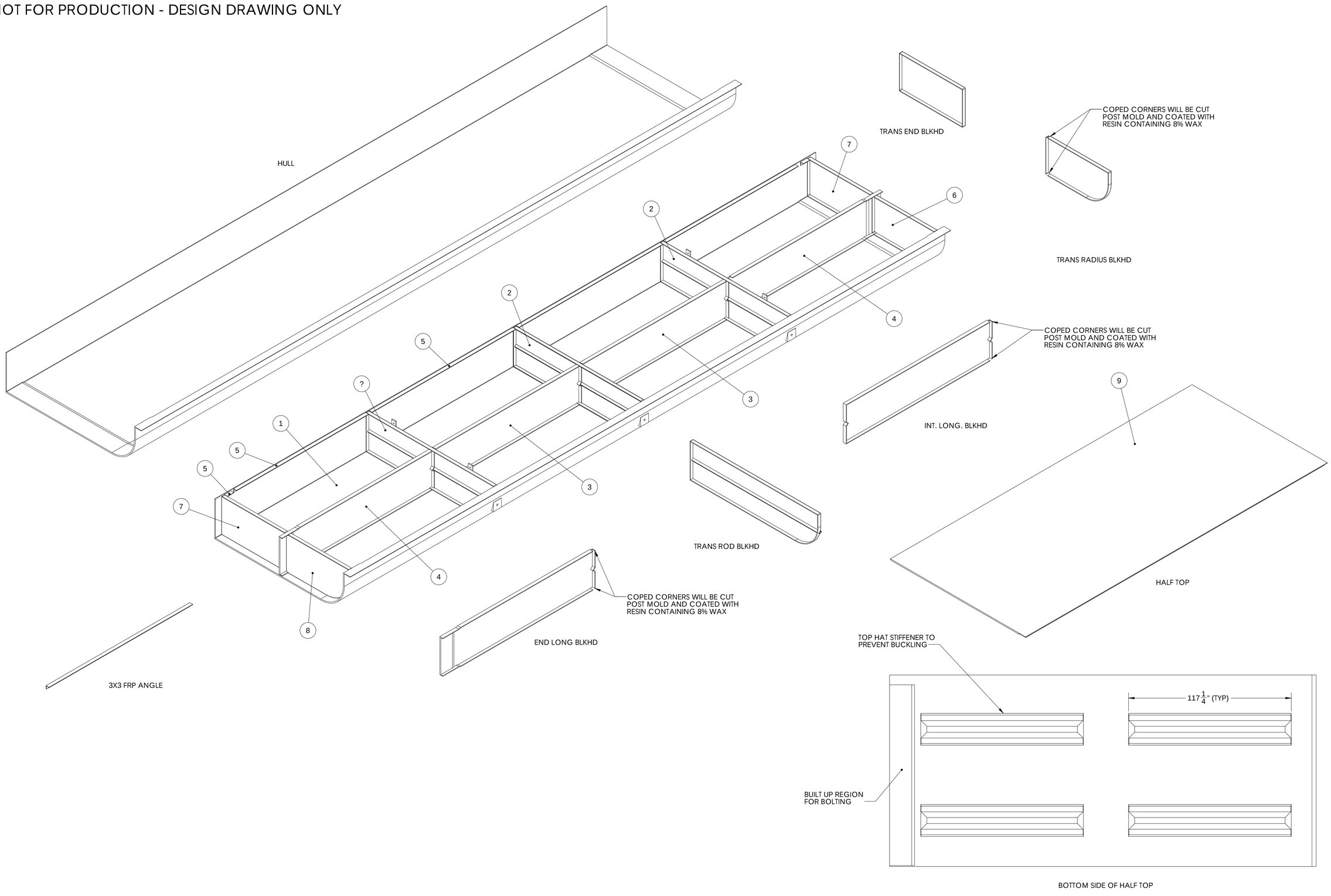

KENWAY CORP.

REV	DESCRIPTION	DATE
1	ADDED LENGTH OF HAT STIFFENERS	5/1/14

SEAL

DIMENSIONS ARE IN INCHES
TOLERANCES: +0, -1/16"
FRACTIONAL ±
ANGULAR: MACH ± BEND ±
TWO PLACE DECIMAL ±
THREE PLACE DECIMAL ±

DRAWN BY	DATE
JM	4/3/14
CHKD BY	DATE
XX	X/X/XX

PROJECT: BROOKFIELD FRP PONTOONS

CUSTOMER: MILLER CONST. / VTRANS

SHEET: STANDARD PONTOON COMPONENTS

WEIGHT: N/A

DESCRIPTION: DESIGN DWG

SCALE 1 : 32

WO NO. 8420

CONTRACT NO. 9185

DWG NO. 8420-1

SHEET 2 OF 5

PONTOON	PART NO.
N/A	N/A

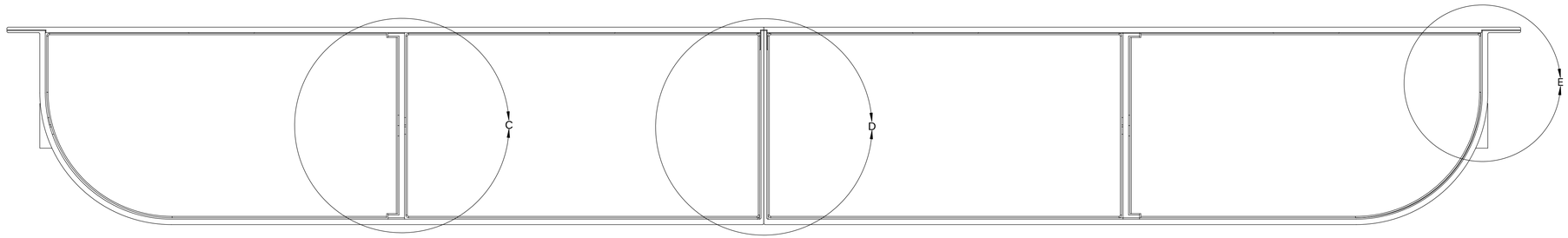

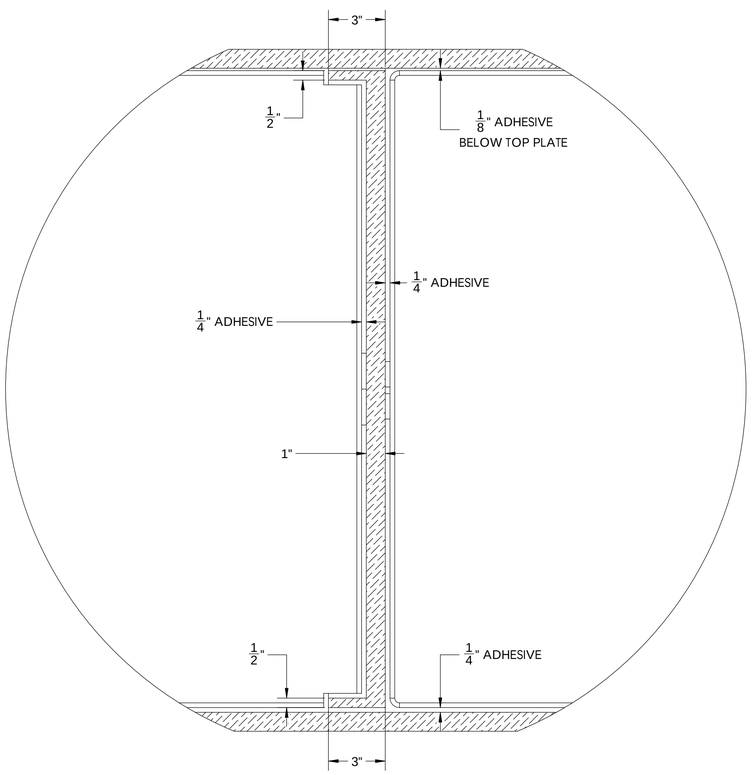

DETAIL C
SCALE 1 : 4

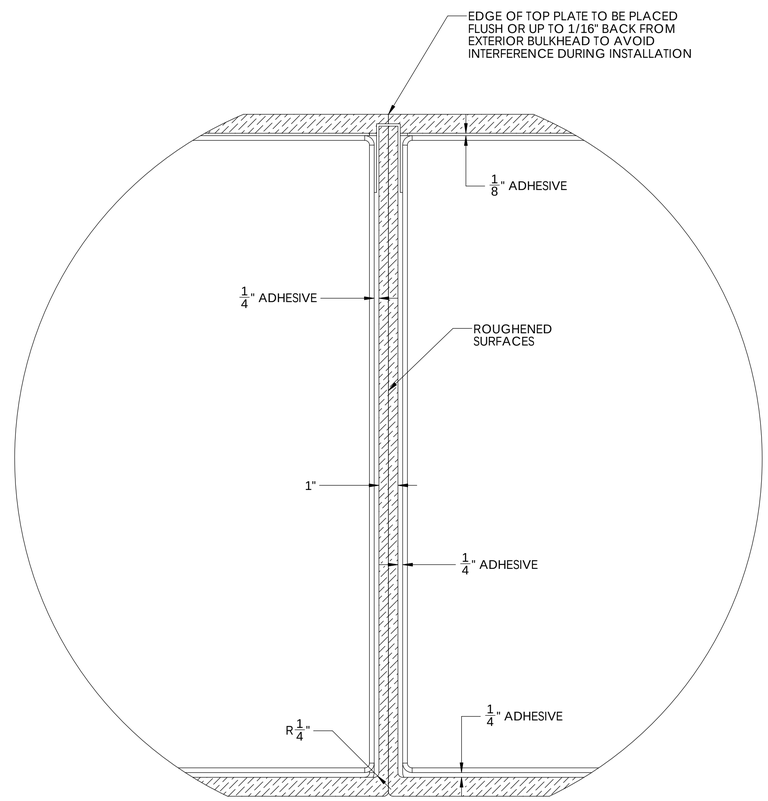

DETAIL D
SCALE 1 : 4

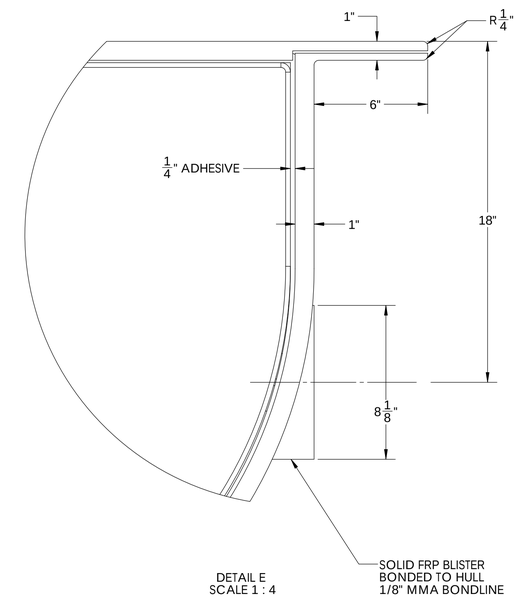

DETAIL E
SCALE 1 : 4

NOT FOR PRODUCTION - DESIGN DRAWING ONLY

KENWAY CORP.

REV	DESCRIPTION	DATE
1	ADDED EDGE FILLETS AND NOTE ON TOP PLATE CLEARANCE	5/1/14
2	CHANGED BLISTER TO 8-1/8 X 8-1/8	5/13/14

SEAL

DIMENSIONS ARE IN INCHES
TOLERANCES: +0, -1/16"
FRACTIONAL ±
ANGULAR: MACH ± BEND ±
TWO PLACE DECIMAL ±
THREE PLACE DECIMAL ±

DRAWN BY	DATE
JM	4/17/14
CHKD BY	DATE
XX	X/X/XX

PROJECT: BROOKFIELD FRP PONTOONS

CUSTOMER: MILLER CONST. / VTRANS

SHEET: STANDARD PONTOON END DETAILS

WEIGHT: N/A

DESCRIPTION: DESIGN DWG

SCALE 1 : 12

WO NO. 8420

CONTRACT NO. 9185

DWG NO. 8420-1

SHEET 3 OF 5

PONTOON	PART NO.
N/A	N/A

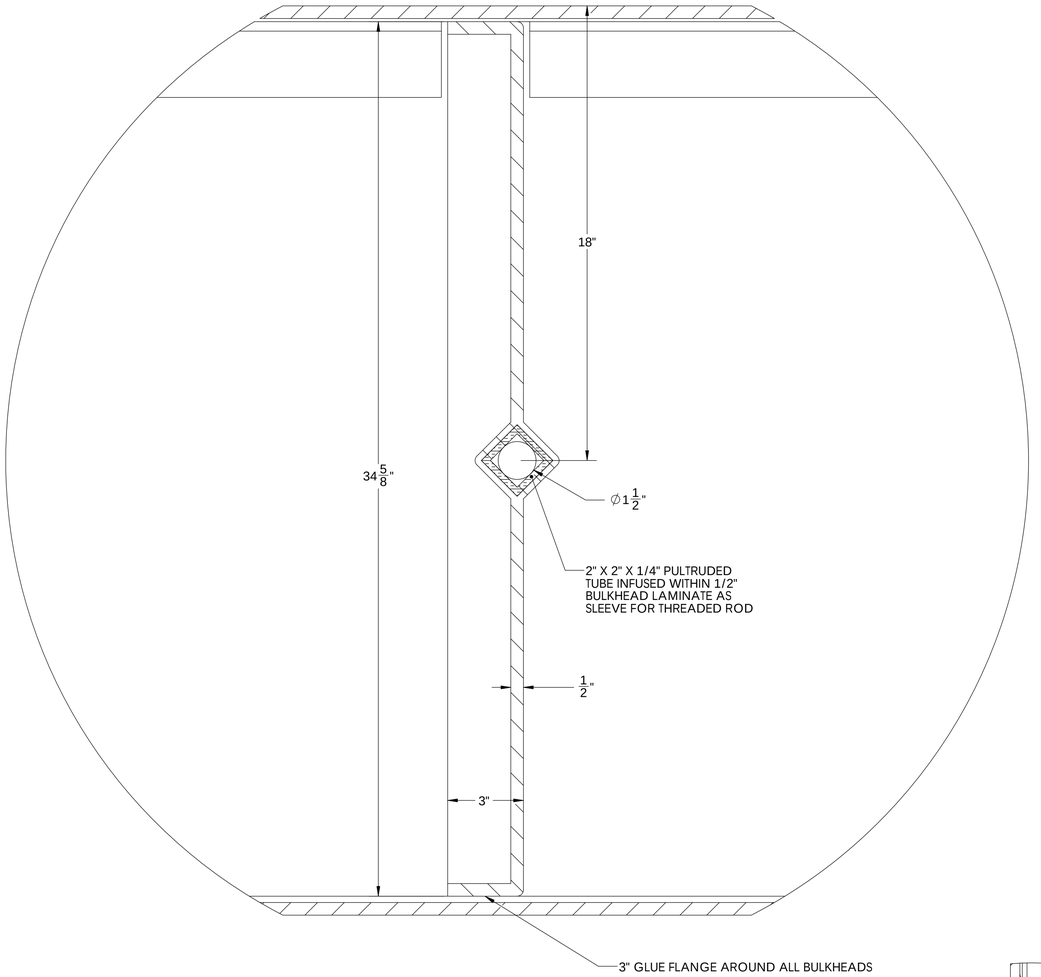

DETAIL F
SCALE 1 : 3

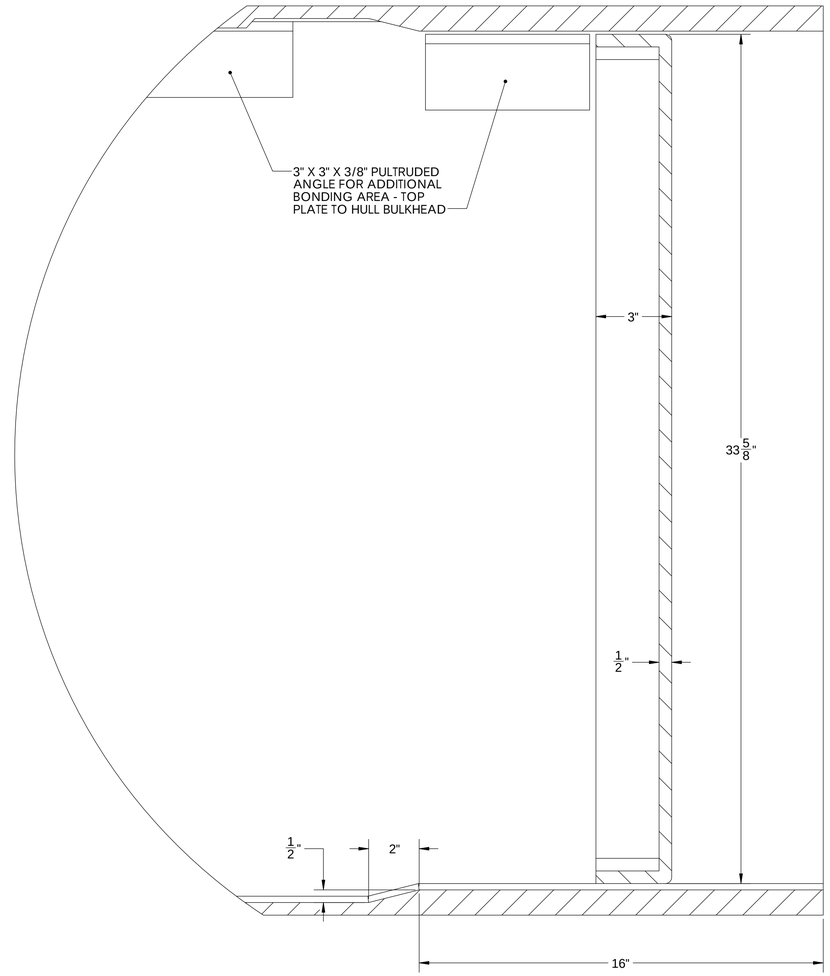

DETAIL G
SCALE 1 : 3

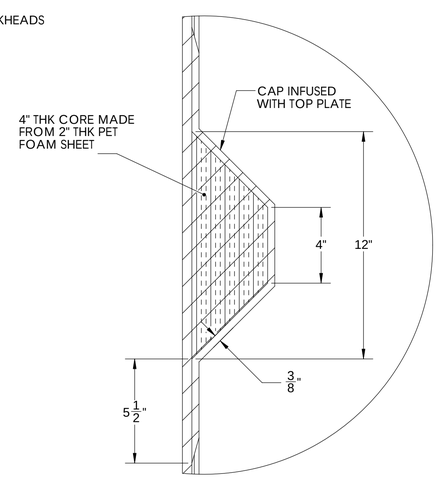

DETAIL H
SCALE 1 : 4

NOT FOR PRODUCTION - DESIGN DRAWING ONLY

KENWAY CORP.

REV	DESCRIPTION	DATE
1	UPDATED STIFFENER CORE AND CAP NOTES	5/1/14

SEAL

DIMENSIONS ARE IN INCHES
TOLERANCES: +0, -1/16"
FRACTIONAL ± BEND ±
ANGULAR: MACH ± ± ±
TWO PLACE DECIMAL ±
THREE PLACE DECIMAL ±

DRAWN BY	DATE
JM	4/17/14
CHKD BY	DATE
XX	X/X/XX

PROJECT: BROOKFIELD FRP PONTOONS

CUSTOMER: MILLER CONST. / VTRANS

SHEET: INTERMEDIATE PONTOON GENERAL ARRANGEMENTS

WEIGHT: 12,644 lb

DESCRIPTION: DESIGN DWG

SCALE 1 : 2

WO NO. 8420

CONTRACT NO. 9185

DWG NO. 8420-1

SHEET 4 OF 5

PONTOON	PART NO.
N/A	N/A

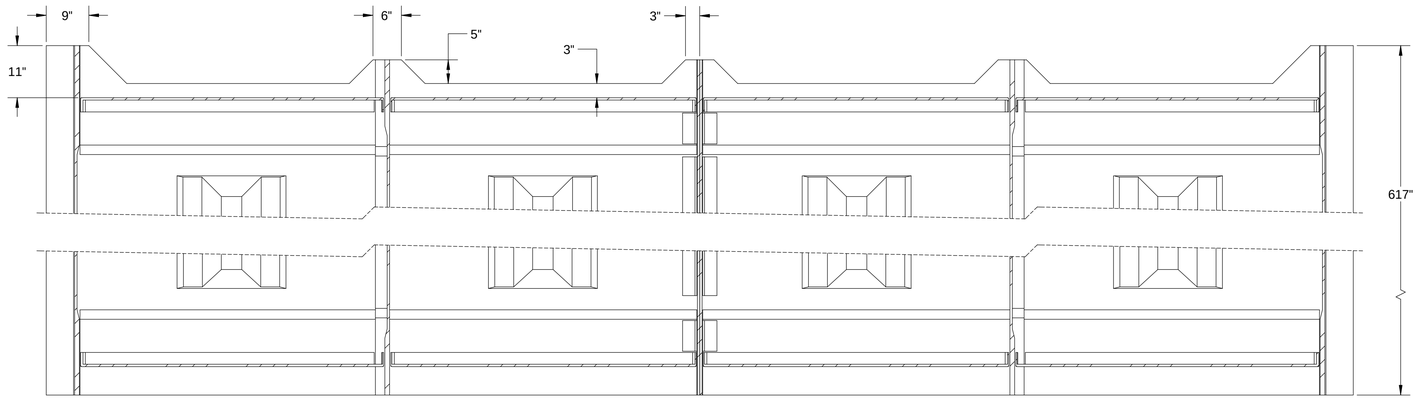

SECTION C-C
SCALE 1 : 16

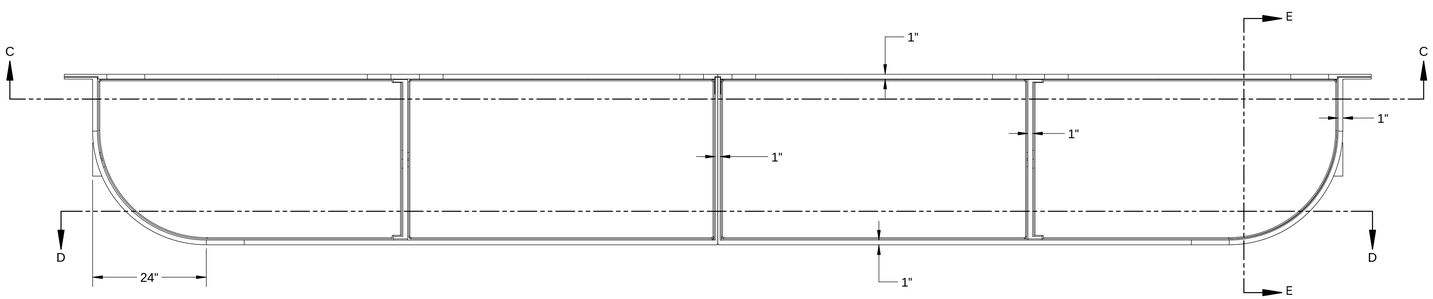

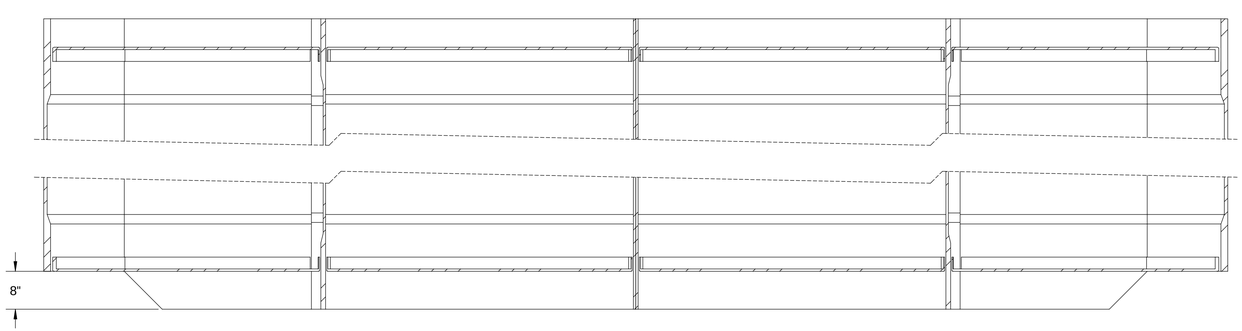

SECTION D-D
SCALE 1 : 16

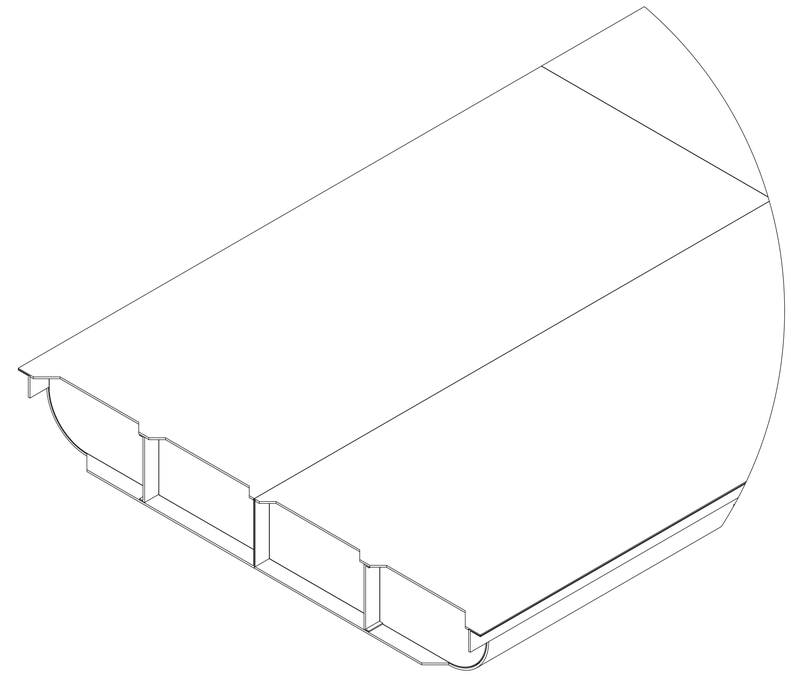

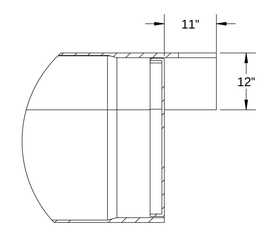

SECTION E-E
SCALE 1 : 16

NOT FOR PRODUCTION - DESIGN DRAWING ONLY

KENWAY CORP.

REV	DESCRIPTION	DATE
1	ADDED OVER LENGTH AND PLATE THICKNESS DIMENSIONS	5/1/14

SEAL

DIMENSIONS ARE IN INCHES
TOLERANCES: +0, -1/16"
FRACTIONAL ±
ANGULAR: MACH ± BEND ±
TWO PLACE DECIMAL ±
THREE PLACE DECIMAL ±

DRAWN BY	DATE
JM	4/17/14
CHKD BY	DATE
XX	X/X/XX

PROJECT: BROOKFIELD FRP PONTOONS

CUSTOMER: MILLER CONST. / VTRANS

SHEET: END RAFT FALNGE AND WEB DETAILS

WEIGHT: 12,644 lb

DESCRIPTION: DESIGN DWG

SCALE 1 : 16

WO NO. 8420

CONTRACT NO. 9185

DWG NO. 8420-1

SHEET 5 OF 5

PONTOON	PART NO.
N/A	N/A

Planned Deviations from the Specifications or Conceptual Design

Overlap in 0/90 Fabric Layers

In all strength calclulations, the actual thickness required for the factored strength to meet the factored loads is less than 1/8". The minimum laminate thickness throughout is 1/2". Given that the average thickness of each ply is 0.058", the strength could be achieved with only 2.2 continuous plies (round up to 3). Therefore, if minimum seam spacing of 2' is maintained and no more than 2 seams at a given location, then for any butt seam (discounting 2 plies with seams) there are 7 additional plies above and/or below the seam tying the laminate together. Kenway plans to run all fabric plies continuously in the longitudinal (dominant stress) direction. Rather than justify the feasibility of butting 0/90 fabric in the transverse direction, Kenway requests that all overlaps be accepted at 2". This is based on design guidance from the following references: Composite Airframe Structures, 3rd Edition, Ch. 4, p. 195: 1-1.5 in. and MIL-HDBK-17-3F, Composite Materials Handbook, Volume 3: 30 times ply thickness (which in this case is 30 x 0.057" = 1.7").

Accepted 5/14/14

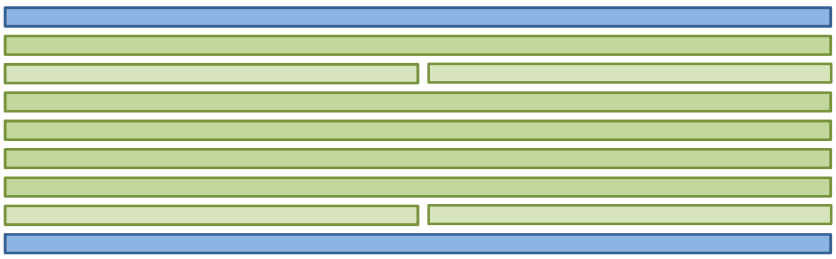

Match-casting Hull Sections

Match-casting adjacent hull sections would be nearly impossible while ensuring vacuum integrity for the resin infusion process. Kenway proposes to rely on accurate construction and inspectoin of the hull mold to ensure that the adjoining vertical sections are straight and perpendicular to the baseline. The pontoons will be joined at Kenway to ensure proper fit and that the resulting geometry satisifies the specification requirements.

Note response provided via email on 4/15/14

Cutting of Hull Sections

Standard pontoon ends will be formed in the mold net-shape. No cutting other than normal trimming of flashing is planned. The ends of the end rafts will also be net-shape molded. Some minor cutting and trimming is expected to finalize the shape. However, any laminate that is cut will be final coated with the same resin to seal end grain and exposed fibers.

Note response provided via email on 4/15/14

Stainless vs. FRP Shim Plates

Kenway proposes the use of FRP shim plates in lieu of stainless steel shim plates between the interior web shelf support plates. Stainless is required to have a minimum yield strength of 30 ksi. The FRP will have a compressive strength of at least 35 ksi. The FRP shim plates can be more easily formed to the precise thickness required and will not cause any corrosion.

Accepted 4/24/14

Kenway Corporation Background

Founded in 1947 by Kenneth G. Priest, Sr., Kenway originally manufactured wooden boats of its own design, but was early to adopt fiberglass as a building material. Kenway Boats' reputation for excellence spread to other industries and in 1966 a decision was made to focus exclusively on fiberglass fabrications for industrial clients. Kenway Boats became Kenway Corporation.

Custom work and custom service are what distinguish Kenway: Strategically positioned to serve its customers by offering complete engineering and design capabilities so that it may bring both standard items as well as "one-off" special molded fabrications from the design phase, through the manufacturing phase, and to final on-site installation.

A diversification strategy over the past 10-years has brought Kenway's industrial manufacturing experience to the energy, transportation, aquaculture, waste and water treatment, and architectural industries. In addition Kenway has developed a significant marine focus, producing for companies like Hodgdon Yachts, Hinckley Yachts, and Derecktor Shipyards specialty parts, vessel superstructures and waterjet intakes for high speed ferries. In addition to Kenway's custom engineered marine manufacturing experience, the company also has a division that focuses on the production brand Southport Boats.

Today, Kenway Corporation is a diversified composites manufacturing company serving a variety of markets encompassing the power, paper and pulp, transportation and marine industry while employing over 70 composite technicians, engineers, and associated staff. The company is intently focused on leading the future of composites manufacturing, with ongoing research and development projects in infrastructure, transportation, renewable wind energy, military, and marine applications. What links the company's various business lines is: technologically advanced manufacturing techniques, products manufactured for exacting service applications, and the highest quality assurance procedures and processes.

Key Technical Staff

Kenneth Priest II, P.E., CEO, a University of Maine engineering graduate and Professional Engineer, registered in the State of Maine, joined the company as vice president in 1977 and has amassed a vast expertise in the design, manufacture and installation of composite structures. Priest's career has been defined by a willingness to try new markets and abandon aging ones. Priest became Kenway's president in 1989 and immediately set about shifting the company's focus from making parts almost exclusively for the struggling pulp and paper industry to other industrial areas like aquaculture, wastewater treatment and energy. Priest is a past Board Member of the American Composites Manufacturing Association.

Phil Mosher, Head of Product Development, brings over 40-years experience in the structural design and engineering of composite components for the transportation and marine industries, gained while Technical Director and Principal Engineer for TPI Composites and Pearson Yachts. Mosher lead the structural design, engineering and manufacturing of many transportation industry projects totaling more than $100 million in value. Significant projects included supply of composite people movers for at international airports, subcontracted to Otis. Composite chassis, floors and bodies for Adtranz's high speed trains in Germany. Monocoque composite cars for Disney and composite floor panels for the Bay Area Rapid Transit, GM Electromotive and Bomardier-Acela. Mr. Mosher also provided technical direction to TPI's numerous wind blade projects, and the Pearson Yachts product line.

Jacob Marquis, Senior Project Engineer, holds a Bachelor's degree in Civil Engineering with a concentration in structures from The University of Maine. He has nearly 20 years of engineering experience including the past 7 years focused in composite materials, including several graduate courses in composite mechanics. Marquis was previously employed as R&D Program Manager at the Advanced Structures and Composites Center at UMaine. He had the responsibility of managing engineering analysis, design, and testing for R&D projects related to the composites, marine, infrastructure, and renewable energy industries. From 1996 to 2007, Mr. Marquis held positions of Engineer and Senior Engineer at Electric Boat Corporation, a division of General Dynamics. He worked on the development, production, and lifecycle support of nuclear powered submarines, primarily in the sound and vibration department. During this time, Mr. Marquis' duties included numerical analysis of ship structure, components, and systems, data acquisition and analysis for the noise reduction test program, and oversight of construction budgets, schedules, and deliverables for his department.

Project Engineers: The technical experience of Priest, Mosher and Marquis is supplemented by four degreed engineers with combined composites experience of 31 years who serve as project managers, the combination of which provides the foundation for Kenway's success and stellar reputation for the design, manufacture, and on-site installation of complex composite designs.

Technically Challenging Projects

The following representative projects illustrate Kenway Corporation's engineering and manufacturing experience and ability to complete large-scale, complex projects. Importantly, it is the same innovative design and engineering talent combined with breadth of project management experience that would be brought to the production of the floating bridge pontoons.

- **Universal Submarine Camels for US Navy:** In 2012 and 2013, Kenway was awarded a contract to build the first 4 production sets of composite submarine camels for the Navy. These floating fender systems are 36 ft long and weigh close to 110,000 lb. Kenway infused over 530 solid and sandwich panels, glued these pieces into sub-assemblies, then assembled and delivered the complete product to Groton, CT.

- **Turbo-solutions Wind turbine:** In 2011 Kenway built a 6 KW wind turbine, unique in its design to generate power at very low wind speeds. The turbine featured independently adjustable flaps and complex geometries. Kenway designed tooling that was cut by a five axis CNC machine then fabricated and installed a fully assembled unit including all mechanical actuators and servo control.

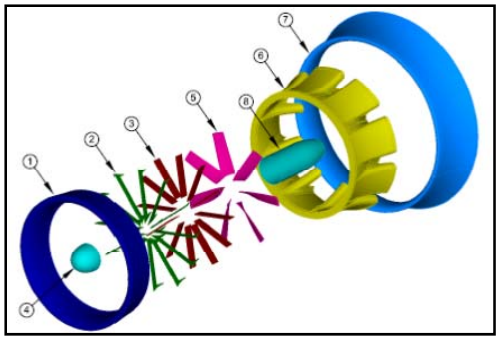

- **Grab Rails for U.S. Navy's DDG 1000 Destroyers:**

  Three ship-sets of 47 each missile hatch grab rails were manufactured for the U.S. Navy's new DDG-1000 destroyers under construction at Bath Iron Works. Kenway's material selection and design enabled the grab rails to pass a stringent smoke test and deflection criteria – verified through testing at the University of Maine.

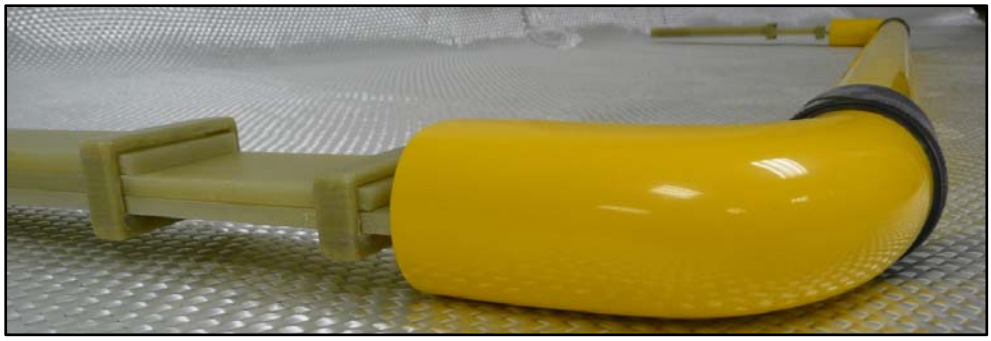

Facilities

A 50,000 ft^2 plant located in Augusta, ME provides fabrication and office space where Kenway manufactures with a variety of processes including, vacuum assisted resin transfer molding (VARTM) since 2008, filament winding (1” to 144” Ø) since 2001, spray and hand lamination, vacuum bagging and mold fabrication.

The entire facility is climate controlled, reconfigurable, and includes manufacturing equipment such as overhead cranes, distributed vacuum and compressed air lines, machine tools, dust collection, and dedicated composite manufacturing equipment to support the processes listed above.

Field Service

Approximately 50% of Kenway’s work involves field services such as FRP equipment installations, repairs, modifications, linings, and emergency response services. Consequently, a core competence of Kenway is not just the design and manufacture of composite structures, but also performing their field installation.

Awards & Recognition

In 2009 Kenway Corporation received the American Composites Manufacturer’s “Award for Technical Innovation” for its FRP Abrasion/Corrosion Resistant Blind Flange. The composite part demonstrates the effectiveness of using an innovative vacuum infusion technology to reduce manufacturing and labor costs associated with producing large components that can warp during open molding. Kenway showed it can manufacture significantly larger components while controlling the gel time until full laminate infusion has occurred and then manage the cure process to avoid the traditional pitfalls of excessive heat, thereby eliminating costly post-machining and greatly reducing manufacturing labor.

Ken Priest II, P.E. received the 2009 *Large Company Business Leader of the Year* award from MaineBiz. In 2008, The Maine Manufacturing Extension Partnership (Maine MEP) honored Kenway with their *Manufacturer of the Year* award. This award is presented every year to a company that has achieved world-class manufacturing status and has implemented best manufacturing practices required to advance in the marketplace.

5/2/14

The licensed Engineer available on-site as necessary with mechanical or structural engineering background is Jacob Marquis. Mr. Marquis is the Senior Project Engineer for Kenway and he holds a Bachelor's degree in Civil Engineering with a concentration in structures from The University of Maine. He has nearly 20 years of engineering experience including the past 7 years focused in composite materials, including several graduate courses in composite mechanics. Marquis was previously employed as R&D Program Manager at the Advanced Structures and Composites Center at UMaine. He had the responsibility of managing engineering analysis, design, and testing for R&D projects related to the composites, marine, infrastructure, and renewable energy industries. From 1996 to 2007, Mr. Marquis held positions of Engineer and Senior Engineer at Electric Boat Corporation, a division of General Dynamics. He worked on the development, production, and lifecycle support of nuclear powered submarines, primarily in the sound and vibration department. During this time, Mr. Marquis' duties included numerical analysis of ship structure, components, and systems, data acquisition and analysis for the noise reduction test program, and oversight of construction budgets, schedules, and deliverables for his department.

Mr. Marquis' PE License is currently in the approval process. PE License number shall be provided upon approval.