MILLER CONSTRUCTION, INC.

P.O. BOX 86 ASCUTNEY BLVD WINDSOR, VERMONT 05089-0086
TELEPHONE (802) 674-5525 / FAX (802) 674-5245

TRANSMITTAL

TO: Kristin M. Higgins, PE Project Manager Vermont Agency of Transportation	DATE	PROJECT NO.
	1/31/2014	Barnard ER BRF 0241 (39)

XX WE ENCLOSE THE FOLLOWING: _____ UNDER SEPARATE COVER WE ARE SENDING THE FOLLOWING

COPIES	NUMBER	DESCRIPTION	CODE
1		Site Specific TTC Plan	H

CODE:

A FOR INITIAL APPROVAL
B FOR FINAL APPROVAL
C APPROVED AS NOTED-RESUBMISSION REQUIRED
D APPROVED AS NOTED-RESUBMISSION NOT REQUIRED
E DISAPPROVED-RESUBMIT
F QUOTATION REQUESTED
G APPROVED
H FOR APPROVAL
I AS REQUESTED OR REQUIRED
J FOR USE IN ERECTION
K LETTER FOLLOWS
L FOR FIELD CHECK
M FOR YOUR USE

BY: Paul [illegible]

Site Specific Traffic Control Plan
for
Barnard ER BRF 0241 (39) Project

STATE OF VERMONT
PAUL J. HOLLOWAY
NO. 90661
STRUCTURAL
LICENSED
PROFESSIONAL ENGINEER

1/31/14

Prepared By:
Miller Construction, Inc.
P.O. Box 86
Windsor, Vermont 05089

January 31st 2014

Site Specific Traffic Control Plan
for
State of Vermont Project: Barnard ER BRF 0241 (39)

TABLE OF CONTENTS

General Project Description/Traffic Control Notes	Page 2 – 3
Detour Plan – Sheet 1	Page 3
Intersection Detail VT 107 / VT 12 – Sheet 2	Page 4
Intersection Detail VT 12 / N. Road – Sheet 3	Page 5
Intersection Detail VT 107 / N. Road – Sheet 4	Page 6
Road Closure Detail – Sheet 5	Page 7
Sign Post Detail	Page 8
VTrans Standards	Page 9 - 13

General Project Description:

Barnard ER BRF 0241 (39) includes the replacement of Bridge No. 25 with related channel and approach work. Bridge No. 25 is located in the Town of Barnard on Vermont Route 12, beginning at Mile Post 7.0195 and Ending at Mile Post 7.0535.

During construction, Vermont Route 12 shall be closed at the Project Site Location. A seven mile long detour along North Road, located east of Vermont Route 12 shall be utilized. Prior to the road closure, line striping and all permanent and corresponding detour signage shall be installed along North Road. This detour shall remain in place for an anticipated 28 Days, or until the replacement of Bridge No. 25 is complete and released to traffic.

The Road Closure is based on the 2009 Edition of the MUTCD Typical Application 8, Road Closure with an Off-Site Detour. Requirements of the MUTCD and all applicable Agency Standard Drawings shall be adhered to. Where conflicts exist, the MUTCD shall govern.

This Traffic Control Plan includes all signs and barricades associated with the road closure, and the maintenance of local traffic and corresponding detour. Minimum sign spacing shall be 500 feet. Actual field conditions may require modifications to this Plan. At such time, revisions shall be established and documented.

Traffic Control Notes:

Phase 1 - Mobilization: Portable changeable message signs shall be installed and fully operational a minimum of two weeks prior to the road closure. After line stripping and permanent signage is installed along North Road, detour signage shall be installed and covered. When Vermont Route 12 is closed, the detour shall be opened by uncovering detour signage and covering "Legal Load Limit 24,000 Pounds" signage along North Road.

Confirmation route markers (Sign 3) not shown on these plans shall be installed at the following locations:

On Vermont Route 12/107, west of the intersection with North Road in Bethel.
On North Road, south of the intersection with Vermont Route 12/107 in Bethel.
On North Road, north of the intersection with Vermont Route 12 in Barnard.

Phase 2 – Removal of Temporary Bridge: It is not expected that additional Traffic Control measures beyond the road closure will be required.

Phase 3 – Excavation and Piling: It is not expected that additional Traffic Control measures beyond the road closure will be required.

Phase 4 – Precast Installation: Certified Flaggers shall be utilized to protect local traffic at the location used to maneuver trucks at the Ralph Ward Farm Property.

Phase 5 - Roadwork and Paving: Certified Flaggers shall be utilized to maintain local traffic within the work limits.

Phase 6 – Release Site to Traffic: Vermont Route 12 shall be released to traffic by removing traffic control devices at the Project Site and removing subsequent detour signage.

Work may occur at the Project Site after Vermont Route 12 is released to traffic. This work may include, but is not limited to, final paving on the approaches, paving of Bridge No. 25, and line stripping.

Should this work occur after Vermont Route 12 is released to traffic, Certified Flaggers shall be utilized and every effort shall be made to minimize disruption of traffic flow.

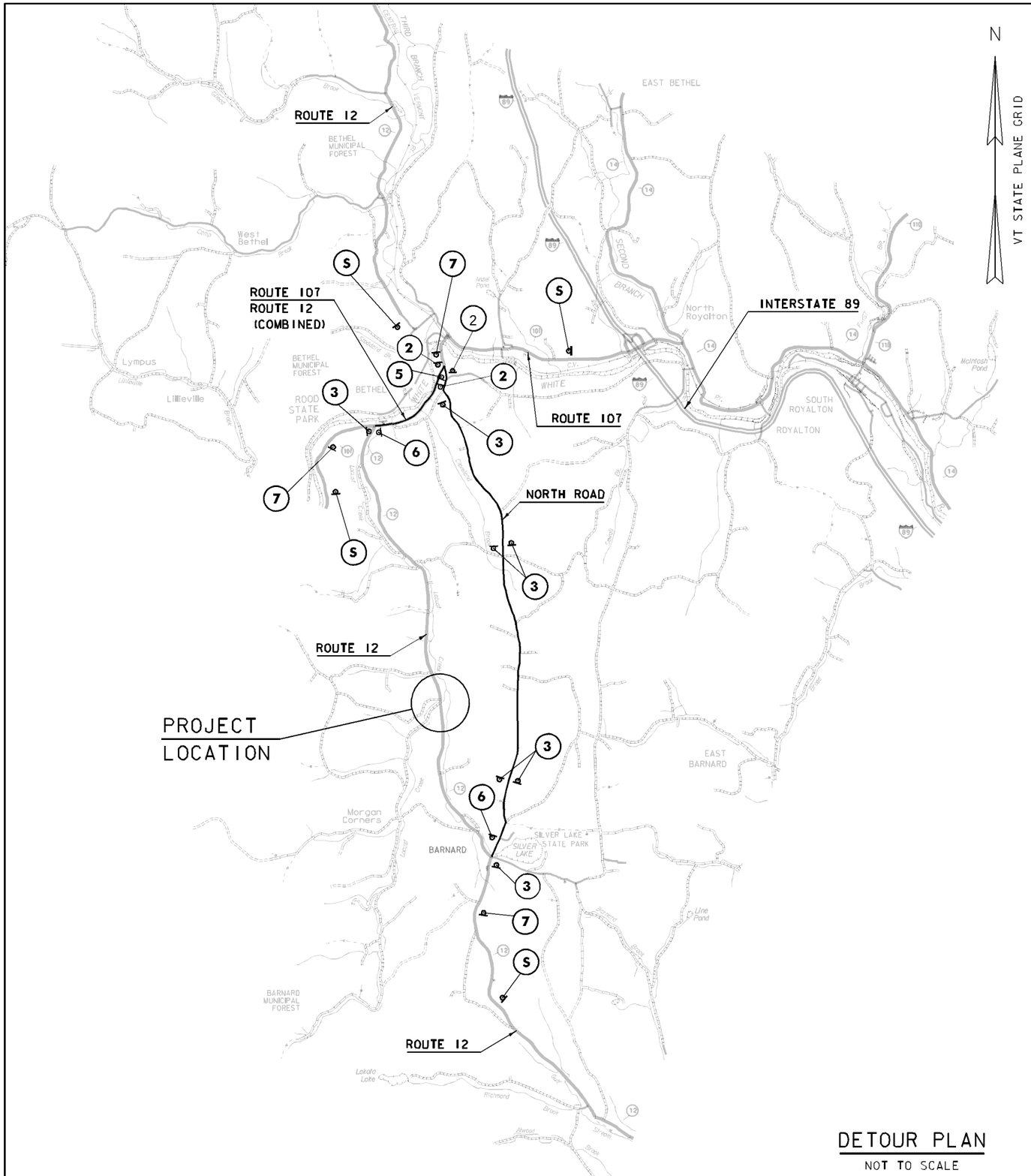

V	T		1	2			
C	L	O	S	E	D		

PORTABLE CHANGEABLE SIGN - PHASE 1

N	O	R	T	H		O	F
B	A	R	N	A	R	D	

PORTABLE CHANGEABLE SIGN - PHASE 2

*	M	M	M	M		D	D	-
*	M	M	M	M		D	D	

PORTABLE CHANGEABLE SIGN - PHASE 3

**N= NORTH
OR
S= SOUTH

* M=MONTH
D=DAY

(S)

NOTES:

1. THE PORTABLE CHANGEABLE MESSAGE SIGNS SHALL BE FULLY OPERATIONAL A MINIMUM OF TWO WEEKS PRIOR TO THE CLOSURE OF VT 12.
2. DURING ACTUAL CLOSURE, ELIMINATE PHASE 3 ONLY.
3. DETOUR SIGNS SHALL BE LOCATED ADJACENT TO EXISTING INTERSECTION ROUTE MARKER ASSEMBLIES WHERE APPLICABLE.
4. CONFIRMATION ROUTE MARKERS (SIGN 3) SHALL BE INSTALLED IMMEDIATELY FOLLOWING EACH TURN AND AT ALL LOCATIONS ALONG DETOUR WHERE ROUTE MAKERS EXIST FOR THE PARENT ROUTE.
5. DURING THE ROAD CLOSURE PERIOD ALL "LEGAL LOAD LIMIT 24,000 POUNDS" SIGNS ALONG THE DETOUR ROUTE SHALL BE COVERED.

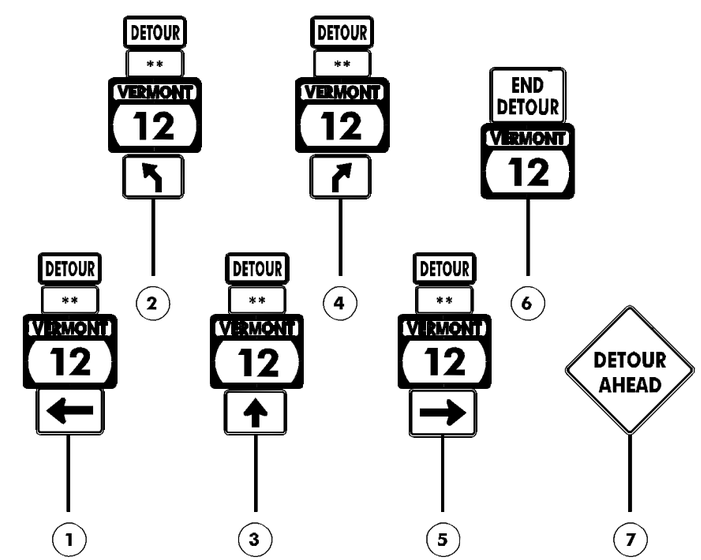

DETOUR PLAN

NOT TO SCALE

Miller Construction, Inc. Windsor, Vermont		
Barnard ER BRF 0241 (39) TTC Plan		
Detour Plan		Sheet 1
Date 1/29/2014	Scale NTS	

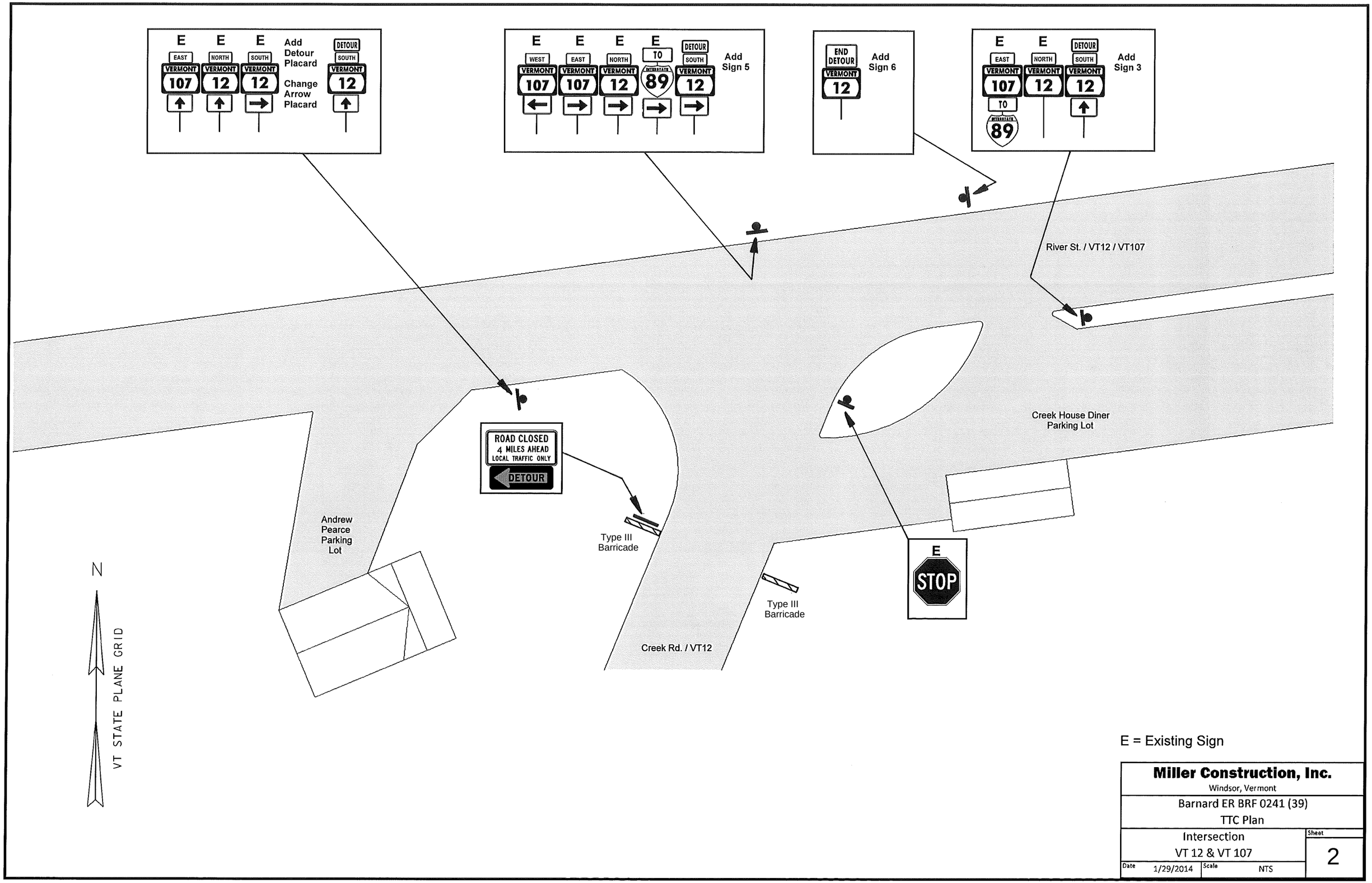

E = Existing Sign

Miller Construction, Inc. Windsor, Vermont	
Barnard ER BRF 0241 (39) TTC Plan	
Intersection VT 12 & VT 107	Sheet 2
Date 1/29/2014 Scale NTS	

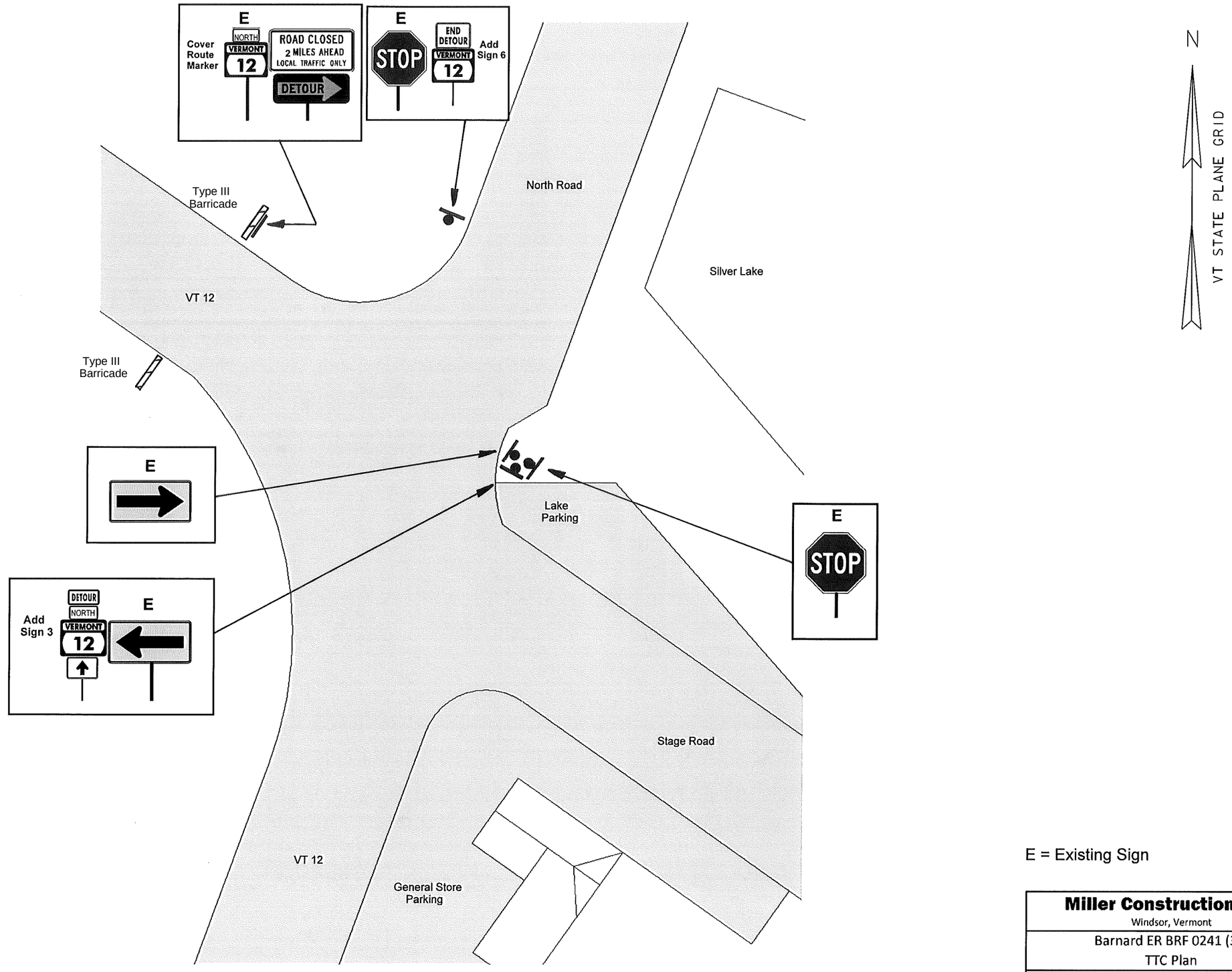

E = Existing Sign

Miller Construction, Inc. Windsor, Vermont		
Barnard ER BRF 0241 (39) TTC Plan		
Intersection VT 12 & North Road		Sheet 3
Date 1/29/2014	Scale NTS	

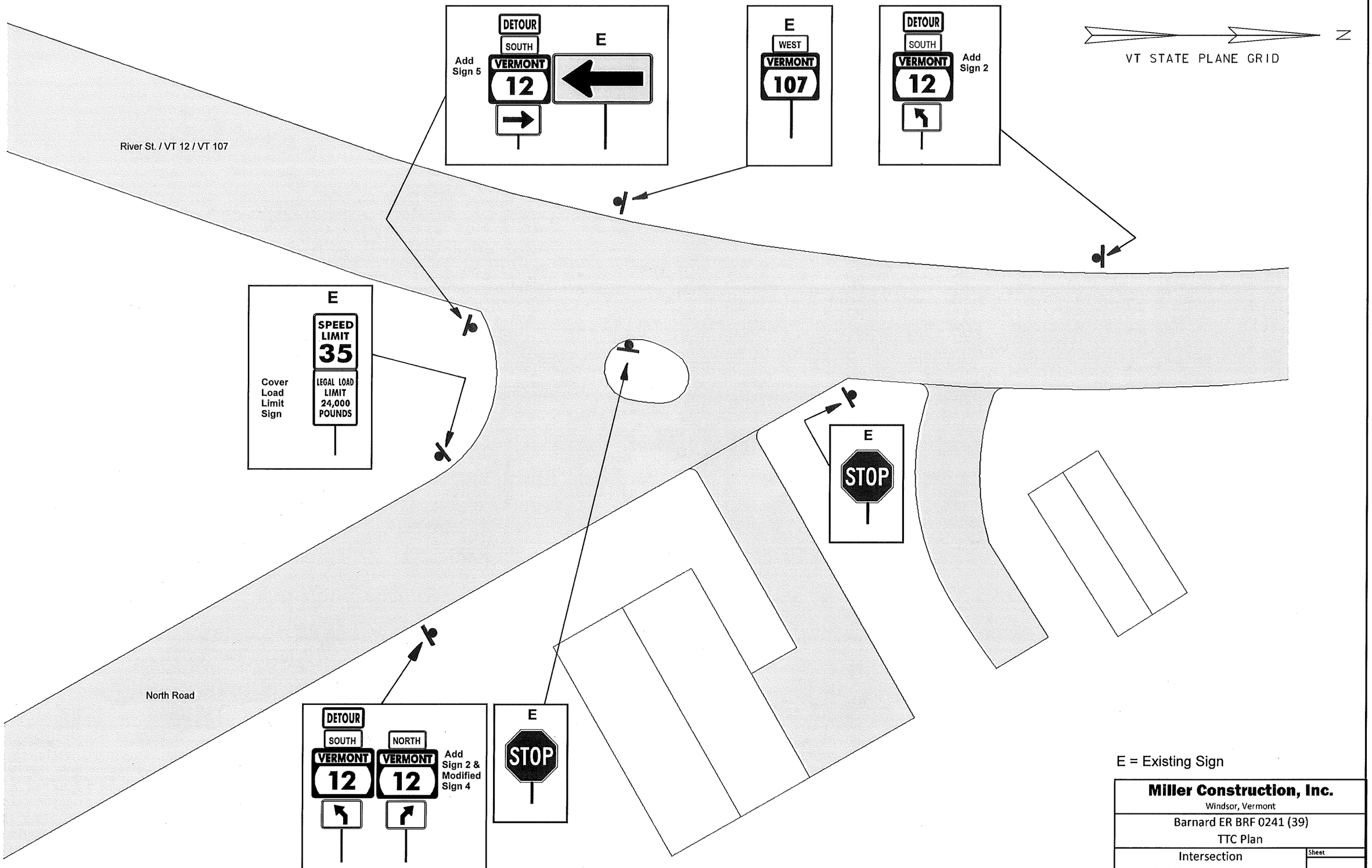

E = Existing Sign

Miller Construction, Inc. Windsor, Vermont	
Barnard ER BRF 0241 (39) TTC Plan	
Intersection VT 107 & North Road	Sheet 4
Date 1/29/2014 Scale NTS	

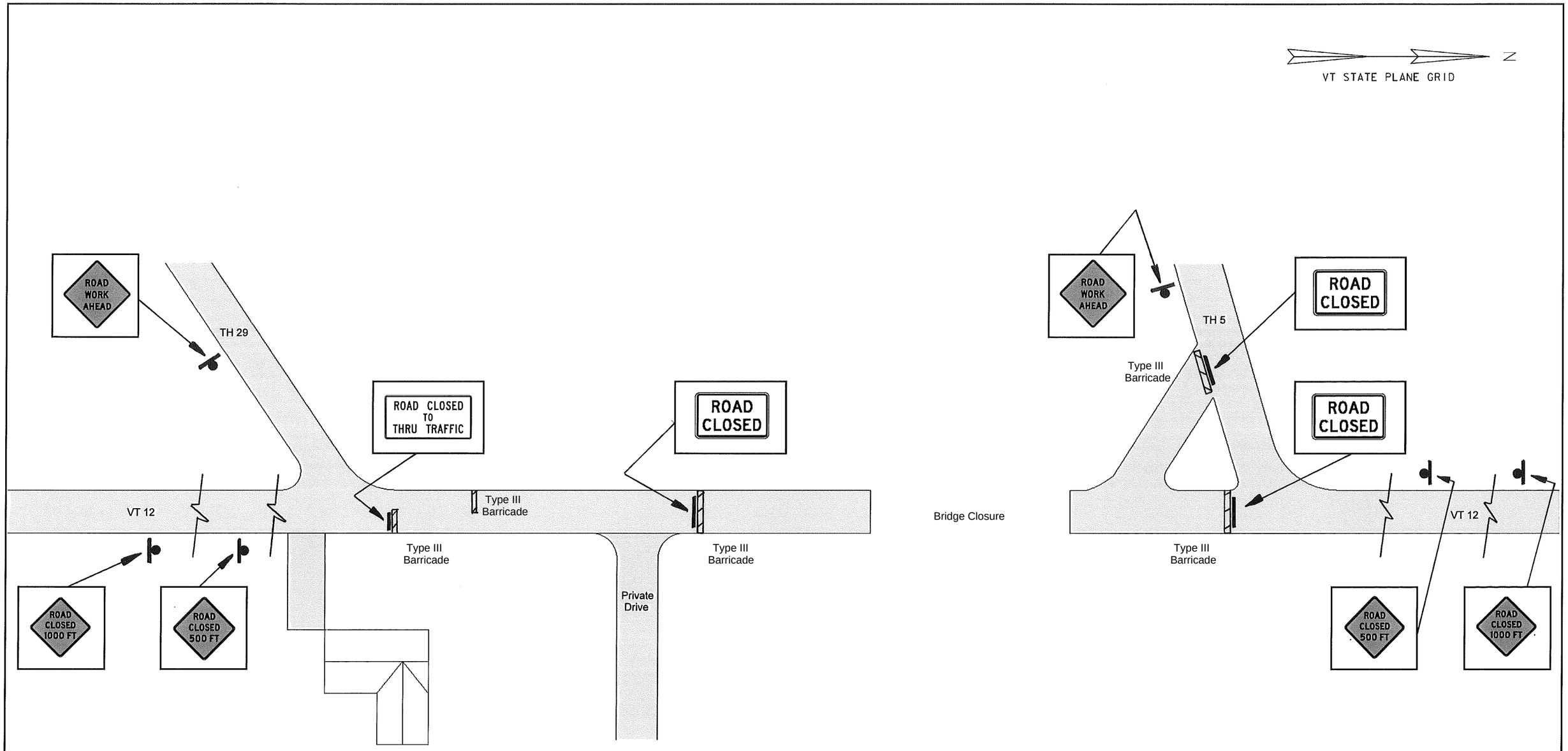

Miller Construction, Inc. Windsor, Vermont	
Barnard ER BRF 0241 (39) TTC Plan	
Route 12 Road Closure	Sheet 5
Date 1/29/2014	Scale NTS

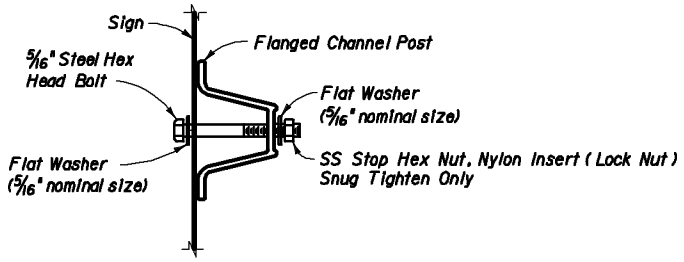

SIGN ATTACHMENT DETAIL

APPROVED STEEL FLANGED CHANNEL POSTS					
lb/ft*	Type	A (in)	B (in)	C (in)	Sx (in^3)
2.50	F	1.562	3.125	1.250	.310
2.50	M	1.500	3.063	1.281	.313
3.00	F	1.750	3.500	1.625	.430
3.00	M	1.875	3.500	1.313	.447
4.00	F	1.750	3.500	1.671	.560
4.00	M	1.938	3.500	1.313	.625

* ±4 %

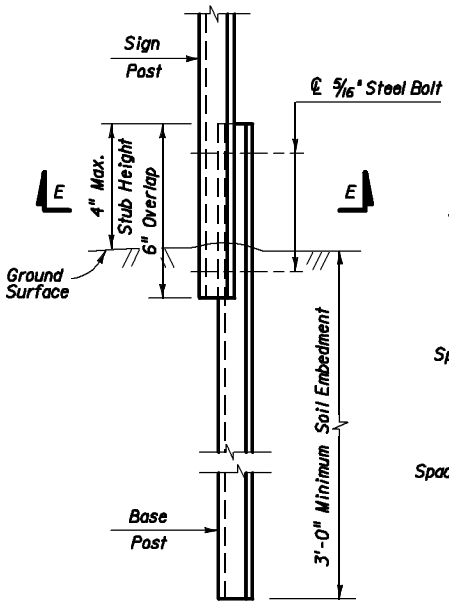

DETAIL "C"
(Approved Frangible Installation)

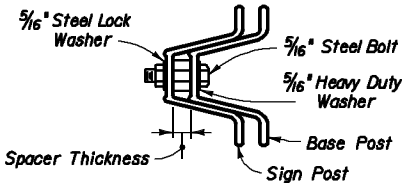

SECTION E-E

Spacer Thickness shall be as follows:

2.5 lb/ft Type M posts shall use 5/16" spacer.
Other posts shall use 5/8" spacer (or two 5/16").

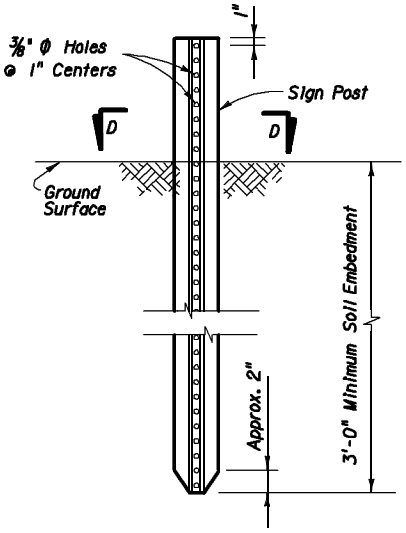

ELEVATION

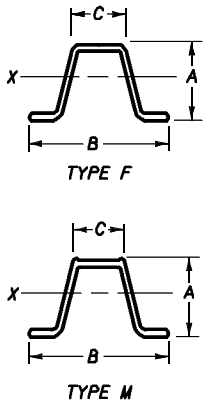

SECTION D-D

STEEL FLANGED CHANNEL POST DETAILS

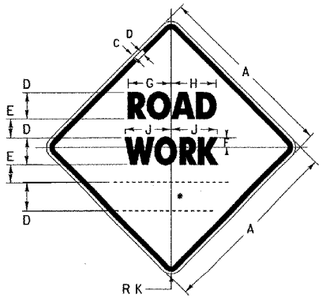

W20-1

* SEE DISTANCE DETAILS

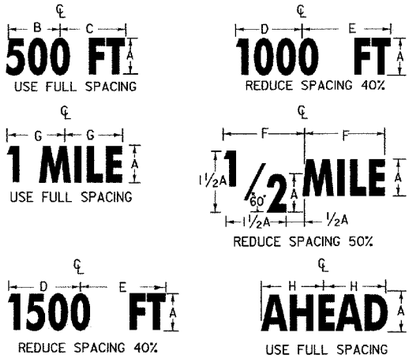

DISTANCE DETAILS

SIGN	DIMENSIONS (INCHES)									
	A	B	C	D	E	F	G	H	J	K
MIN.	36	5/8	7/8	5D	3 1/2	3 1/4	8 3/8	8 7/8	9	2 1/4
STD.	48	3/4	1 1/4	7D	4 3/4	4 1/2	11 11/16	12 7/16	12 5/8	3

DIMENSIONS (INCHES)							
A	B	C	D	E	F	G	H
5D	10 3/16	10 3/16	11 5/8	11 1/4	11 1/4	9 1/2	10 7/8
7D	14 1/4	15 1/8	14 7/8	15 3/4	15 3/4	13 1/16	15 1/2

(ALL DIMENSIONS SHOWN IN INCHES)

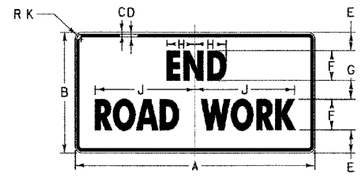

G20-2A

SIGN	DIMENSIONS (INCHES)									
	A	B	C	D	E	F	G	H	J	K
MIN.	36	18	5/8	7/8	3 3/4	4C	2 1/2	4	12 5/8	2 1/4
STD.	48	24	3/4	1 1/4	4 1/8	6C	3 3/4	5 7/8	22	3

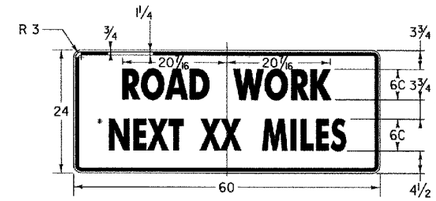

G20-1

* OPTICALLY CENTER

THIS SIGN TO BE USED WHEN PROJECT LENGTH EXCEEDS 2 MILES OR AS REQUESTED BY THE RESIDENT ENGINEER. SHOW MILEAGE TO NEAREST 1/4 MILE USING FRACTIONS, NOT DECIMALS. HAND LETTERING OF MILEAGE WILL NOT BE ALLOWED.

NOTES

THE SIGNS SHOWN ON THIS SHEET ARE INTENDED FOR USE IN PROVIDING ADVANCE WARNING AND INFORMATION ON CONSTRUCTION PROJECTS OVER WHICH TRAFFIC WILL BE MAINTAINED. WHEN ADDITIONAL APPROACH SIGNS OR OTHER TYPES OF ADVANCE SIGNING OR CONTROL ARE NECESSARY, THE PLANS AND\OR THE SPECIFICATIONS FOR THAT PROJECT WILL GIVE THE DETAILS OF THE SIGNS AND DEVICES REQUIRED. FOR ON-PROJECT CONSTRUCTION SIGNS, REFER TO APPROPRIATE STANDARD SHEETS.

APPLICATION OF STANDARDS

SINCE IT IS NOT POSSIBLE TO PRESCRIBE DETAILED STANDARDS OF APPLICATION FOR ALL OF THE SITUATIONS THAT MAY CONCEIVABLY ARISE ON A CONSTRUCTION PROJECT, REFERENCE SHALL BE MADE TO THE "MANUAL ON UNIFORM TRAFFIC CONTROL DEVICES" FOR THE PRINCIPLES, PROCEDURES, AND STANDARDS THAT WILL BE REQUIRED IN CONNECTION WITH ADVANCED WARNING AND ON-PROJECT CONSTRUCTION SIGNS AND BARRICADES. THE SIGNS SHOWN IN E-101 AND E-102 REPRESENT A SAMPLE OF THOSE MORE COMMONLY USED.

LOCATION

THE SIGNS SHALL BE LOCATED AS DETAILED ON THIS SHEET OR AS OTHERWISE SHOWN ON THE PLANS. THEY SHALL APPEAR AT EACH END OF THE HIGHWAY UNDER CONSTRUCTION AND ON ALL INTERSECTING PUBLIC HIGHWAYS. THE ENGINEER SHALL DETERMINE THE EXACT LOCATIONS.

DESIGN

LETTERS, DIGITS, ARROWS, SPACING AND TEXT DIMENSIONS SHALL CONFORM WITH THE "STANDARD HIGHWAY SIGNS BOOK" AND DESIGNS PRESCRIBED IN THE MANUAL ON UNIFORM TRAFFIC CONTROL DEVICES (MUTCD) ADOPTED BY THE U.S. DEPARTMENT OF TRANSPORTATION, FEDERAL HIGHWAY ADMINISTRATION (FHWA).

MATERIALS

THE SIGN BASE MATERIAL USED FOR THE SIGNS ON THIS SHEET MAY BE ANY OF THE FOLLOWING, WITH MINIMUM THICKNESS AS NOTED.

FLAT SHEET ALUMINUM	0.125 INCHES
HIGH DENSITY OVERLAYED PLYWOOD	5/8 INCHES

REFLECTORIZATION

ALL LEAD SIGNS (W20-1) ON THIS SHEET SHALL BE ASTM TYPE VIII FLUORESCENT ORANGE SHEETING. ALL OTHER SIGNS ON THIS SHEET SHALL BE ASTM TYPE III RETROREFLECTORIZED SHEETING.

COLORS

THE COLORS SHALL CONFORM WITH THE STANDARD COLORS ADOPTED BY AASHTO AND APPROVED BY THE FHWA. COLORS SHOWN ON THIS SHEET CONSIST OF BLACK TEXT AND BORDER ON A RETROREFLECTORIZED ASTM TYPE III OR TYPE VIII ORANGE BACKGROUND.

INSTALLATION

THE SIGNS SHALL BE ERECTED BEFORE THE START OF ANY WORK AND SHALL BE COVERED UNTIL WORK COMMENCES, DURING PERIODS OF INACTIVITY, OR UPON COMPLETION OF THE WORK. EACH SIGN SHALL BE ERECTED IN A NEAT AND WORKMANLIKE MANNER ON POSTS SET SECURELY IN THE GROUND. THE BOTTOM OF A SIGN SHALL BE AT LEAST 7 FEET ABOVE THE EDGE OF PAVEMENT, AND THE NEAREST EDGE OF A SIGN SHALL BE AT LEAST 6 FEET OUTSIDE THE SHOULDER POINT, 4 FEET OUTSIDE GUARD RAIL, OR 2 FEET OUTSIDE CURBING, OR SIDEWALK. THE INSTALLATION OF SIGNS SHALL BE SUBJECT TO APPROVAL OF THE ENGINEER. IN URBAN AREAS, THE BOTTOM OF THE SIGN SHALL BE AT LEAST 7 FEET ABOVE THE SIDEWALK. SIGNS MAY BE REMOVED UPON COMPLETION OF THE WORK AT THE DISCRETION OF THE ENGINEER.

NOTES CONT.

MAINTENANCE

SIGNS SHALL BE MAINTAINED IN A CLEAN AND LEGIBLE CONDITION SATISFACTORY TO THE ENGINEER. THEY SHALL BE COMPLETELY VISIBLE TO APPROACHING TRAFFIC AT ALL TIMES. THEY SHALL BE KEPT PLUMB AND LEVEL, AND ALWAYS PRESENT A NEAT APPEARANCE. DAMAGED, DEFACED, OR DIRTY SIGNS SHALL BE REPAIRED, CLEANED OR REPLACED AS ORDERED BY THE ENGINEER.

GENERAL

THE COST OF FURNISHING, INSTALLING, MAINTAINING AND REMOVING ALL CONSTRUCTION APPROACH SIGNS WILL BE CONSIDERED INCIDENTAL WORK PERTAINING TO THE PROJECT AS A WHOLE AND SHALL BE INCLUDED IN THE CONTRACT UNIT PRICE BID FOR VARIOUS ITEMS INVOLVED IN THE CONTRACT. DURING ALL PHASES OF CONSTRUCTION THE REQUIREMENTS SET FORTH IN THE "MANUAL ON UNIFORM TRAFFIC CONTROL DEVICES" SHALL BE MET.

SIGN COVERS

SIGN COVERS SHALL CONSIST OF A PANEL PAINTED FLAT BLACK, THE SAME SIZE AS THE SIGN IT COVERS. THE PANEL SHALL BE OF WOOD, PLYWOOD, HARDBOARD OR ANY MATERIAL SATISFACTORY TO THE ENGINEER. NO MATERIAL WILL BE APPROVED THAT WILL DETERIORATE BY EXPOSURE TO THE WEATHER DURING THE PROJECT. MOUNTING OF THE PANEL SHALL BE DONE IN SUCH A WAY AS NOT TO DAMAGE THE SIGN FACE MATERIAL.

CONTRACTORS SHALL COORDINATE THEIR SIGNING ACTIVITIES WITH OTHER CONTRACTORS WITHIN THE PROJECT LIMITS, AS DIRECTED BY THE REGIONAL CONSTRUCTION ENGINEER.

SIGN POSTS

WHERE CONSTRUCTION SIGN INSTALLATIONS ARE NOT PROTECTED BY GUARD RAIL OR OTHER APPROVED TRAFFIC BARRIERS, THE POSTS ON WHICH THE SIGNS ARE MOUNTED SHALL BE YIELDING METAL POSTS AS DESIGNATED IN THE E SERIES OF STANDARD DRAWINGS OR YIELDING WOODEN POSTS IN ACCORDANCE WITH THE FOLLOWING REQUIREMENTS:

WOODEN POSTS ARE ACCEPTABLE FOR USE WITH CONSTRUCTION SIGNS. THESE POSTS SHALL HAVE A UNIFORM CROSS-SECTION AND SHALL BE MADE FROM GRADE 2, AIR-DRIED SOUTHERN YELLOW PINE OR ANOTHER EQUIVALENT SOFTWOOD. AN ACCEPTABLE EQUIVALENT SOFTWOOD SHALL HAVE AN EXTREME FIBER IN BENDING "Fb" DESIGN VALUE NOT TO EXCEED 1400 psi AND HORIZONTAL SHEAR "Fv" DESIGN VALUE NOT TO EXCEED 90 psi SPECIFICATION; "DESIGN VALUES FOR WOOD CONSTRUCTION" AND RELATED SUPPLEMENT. LATEST EDITION.

AS ESTABLISHED BY THE NATIONAL FOREST PRODUCTS ASSOCIATION IN THEIR NATIONAL DESIGN. THE FOLLOWING ARE CONSIDERED TO BE ACCEPTABLE WOODEN POSTS:

1. 4" X 4" (ACTUAL DIMENSIONS ARE S4S 3.5" X 3.5")
   A) ACCEPTABLE FOR SINGLE OR DUAL POSTS INSTALLATION WITH NO MODIFICATIONS.

ALL WOODEN POSTS SHALL HAVE AN EMBEDMENT DEPTH OF 4 FEET.
NO CROSS-BRACING OR BACK-BRACING TO KEEP THE POSTS PLUMB WILL BE ALLOWED.
CONCRETE FOUNDATIONS, COLLARS, OR SOIL BEARING PLATES ARE NOT PERMITTED.
CONSTRUCTION SIGNS SHALL BE PLACED ON TWO OR MORE POSTS WHEN ANY OF THE FOLLOWING CONDITIONS GOVERN:

A) THE SIGN WIDTH (HORIZONTAL DIMENSIONS FOR DIAMOND SHAPED SIGNS) EXCEEDS 3 1/2 FEET.
B) THE EXPOSED SIGN AREA OF ANY SINGLE SIGN OR ASSEMBLY EXCEEDS 7 SQ. FEET.
C) THE Sv OF A SINGLE POST IS 64.

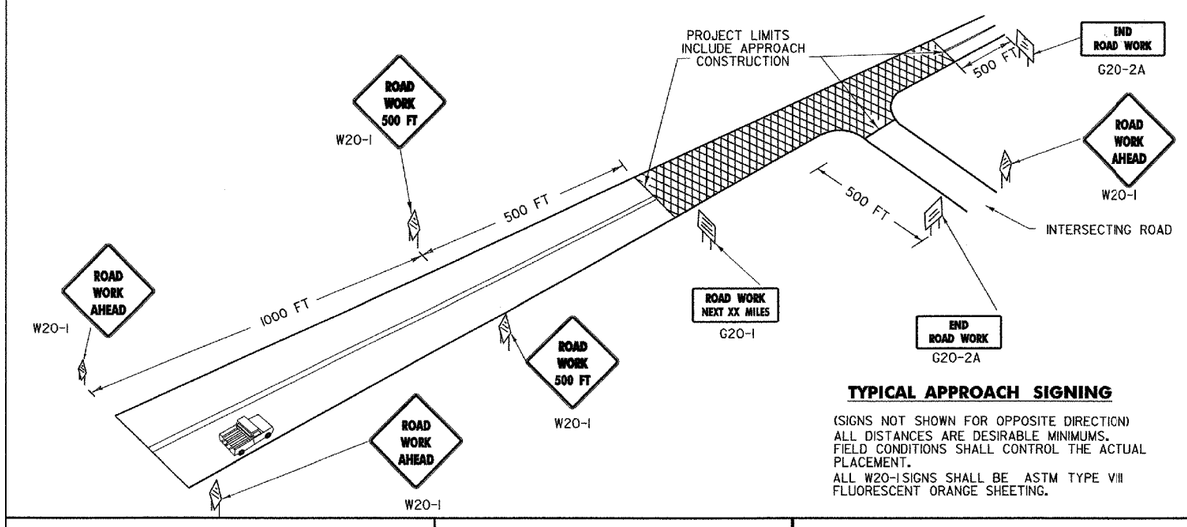

TYPICAL APPROACH SIGNING

(SIGNS NOT SHOWN FOR OPPOSITE DIRECTION)
ALL DISTANCES ARE DESIRABLE MINIMUMS.
FIELD CONDITIONS SHALL CONTROL THE ACTUAL PLACEMENT.
ALL W20-1 SIGNS SHALL BE ASTM TYPE VIII FLUORESCENT ORANGE SHEETING.

OTHER STDS. REQUIRED: E-100A, E-101, E-102

REVISIONS AND CORRECTIONS

MAY 26, 1989 - DATE OF ORIGINAL ISSUE
OCT 21, 1992 - REVISED WOOD POST REQUIREMENTS, ADDED SIGN DETAILS, & REVISED TITLE BLOCK
AUG. 08, 1995 - MINOR NOTE REVISIONS
JAN. 06, 1997 - MINOR NOTE AND DIMENSION REVISIONS
JAN. 2, 2004 - CHANGED REFLECTIVE SHEETING TO ASTM TYPE III OR TYPE VIII

APPROVED

DIRECTOR OF PROGRAM DEVELOPMENT

TRAFFIC OPERATIONS ENGINEER

FEDERAL HIGHWAY ADMINISTRATION

CONSTRUCTION APPROACH SIGNS

VERMONT AGENCY OF TRANSPORTATION

STANDARD

E-100

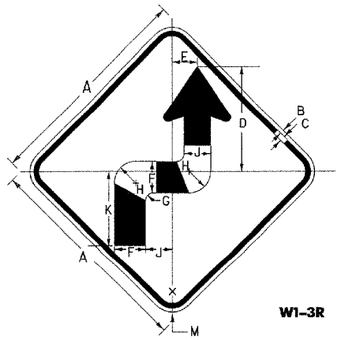

W1-3R

SIGN	DIMENSIONS (INCHES)											
	A	B	C	D	E	F	G	H	J	K	L	M
STD. & MIN.	36	5/8	7/8	17 7/16	4 7/32	5 1/4	1 1/4	3 5/8	4 1/2	12 15/32	1 31/32	2 1/4
SPECIAL	48	3/4	1 1/4	23 3/16	5 5/8	7	1 5/8	4 7/8	6	16 5/8	2 3/16	3

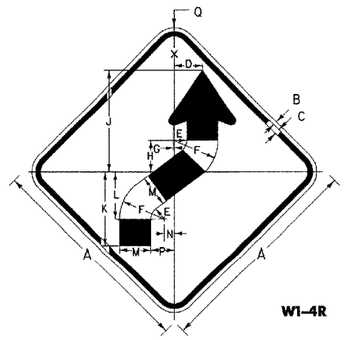

W1-4R

SIGN	DIMENSIONS (INCHES)														
	A	B	C	D	E	F	G	H	J	K	L	M	N	P	Q
STD. & MIN.	36	5/8	7/8	4 23/32	2 1/4	7 1/2	5/32	5 1/4	16 7/8	12 3/8	7 7/8	5 1/4	1 11/16	3 15/16	2 1/4
SPECIAL	48	3/4	1 1/4	6 5/16	3	10	3/16	7	22 1/2	16 1/2	10 1/2	7	2 1/4	5 1/4	3

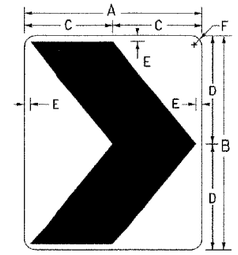

W1-8

SIGN	DIMENSIONS(INCHES)					
	A	B	C	D	E	F
STD.	18	24	9	12	3/4	1 1/2
SPECIAL	24	30	12	15	7/8	1 1/2
EXPWY.	30	36	15	18	1	1 7/8
FRWY.	36	48	18	24	1 1/8	2 1/4

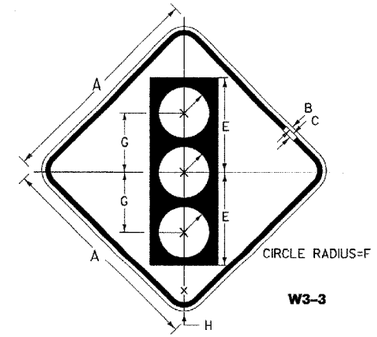

W3-3

SIGN	DIMENSIONS (INCHES)							
	A	B	C	D	E	F	G	H
STD. & MIN.	36	5/8	7/8	5 3/4	15 3/4	4 1/4	10	2 1/4
SPECIAL	48	3/4	1 1/4	7 1/2	20	5	12 1/2	3

COLORS

SYMBOL & LEGEND - BLACK (NON-REFL)
BACKGROUND - ORANGE (REFL)

TOP CIRCLE RED (REFL)
MIDDLE CIRCLE YELLOW (REFL)
BOTTOM CIRCLE GREEN (REFL)

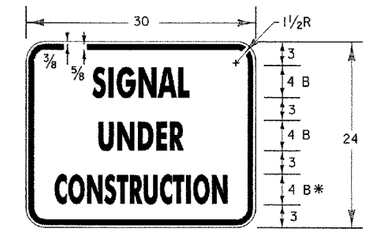

* REDUCE SPACING 50%

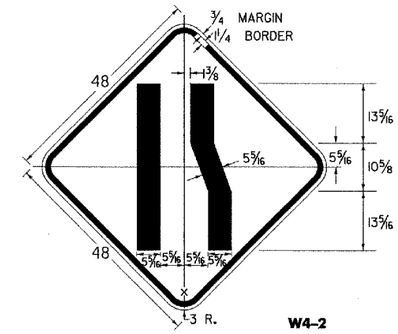

W4-2

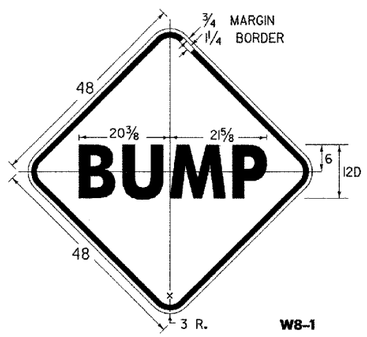

W8-1

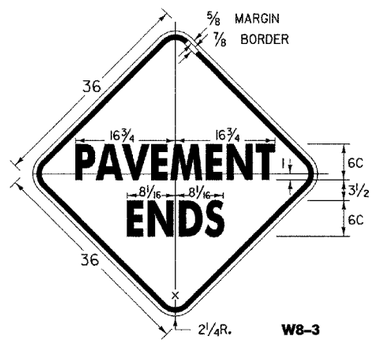

W8-3

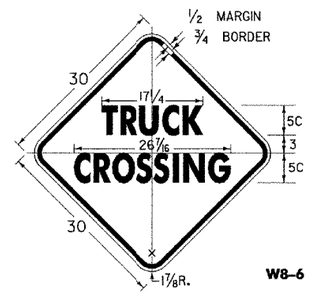

W8-6

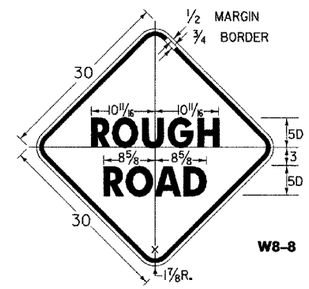

W8-8

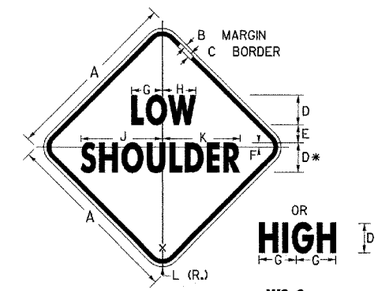

W8-9

* REDUCE SPACING 25%

SIGN	DIMENSIONS(INCHES)										
	A	B	C	D	E	F	G	H	J	K	L
STD.	30	1/2	3/4	5C	3	3/4	5 3/8	5 5/8	13 11/16	13 1/16	1 7/8
FWY.	48	3/4	1 1/4	8C	5	1 1/4	8 1/4	9	21 7/8	20 7/8	3

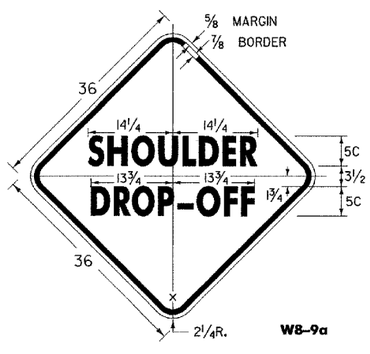

W8-9a

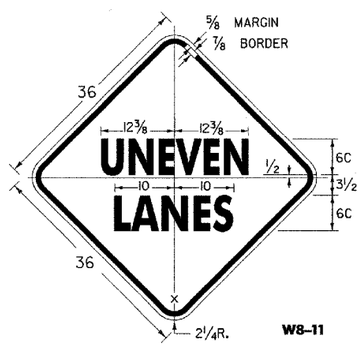

W8-11

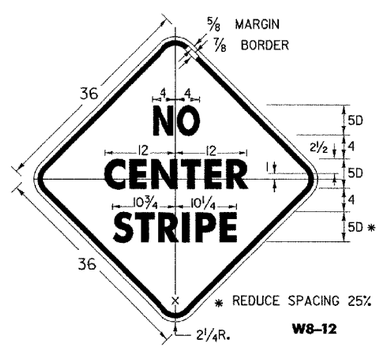

* REDUCE SPACING 25%

W8-12

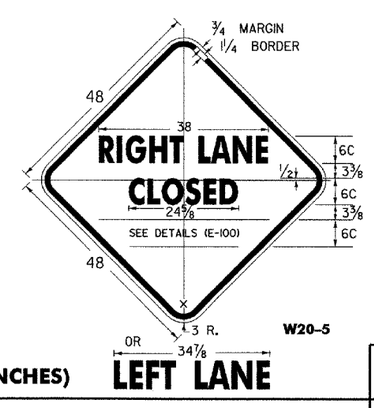

W20-5

(ALL DIMENSIONS SHOWN IN INCHES)

NOTES

SEE STANDARD SHEET E-100 FOR NOTES AND TEXT DETAILS

COLORS FOR SIGNS SHOWN ON THIS SHEET SHALL BE BLACK TEXT, BORDER AND SYMBOLS ON ASTM TYPE III OR TYPE VI RETROREFLECTORIZED ORANGE BACKGROUND, UNLESS OTHERWISE NOTED.

OTHER STDS. REQUIRED: E-100

REVISIONS AND CORRECTIONS

OCT. 30, 1987 - DATE OF ORIGINAL ISSUE
OCT. 21, 1992 - ADDED ADDITIONAL SIGN DIMENSIONS, REVISED CHEVRON BACKROUND TO ORANGE, & REVISED TITLE BLOCK
AUG. 08, 1995 - ADDED AND DELETED VARIOUS SIGN DETAILS
MAR., 10 1997 - REVISED SIGN DETAILS
MAY 30, 2003 - CHANGED REFLECTIVE SHEETING TO ASTM TYPE III OR TYPE VI

APPROVED

DIRECTOR OF PROGRAM DEVELOPMENT

TRAFFIC OPERATIONS ENGINEER

FEDERAL HIGHWAY ADMINISTRATION

CONSTRUCTION SIGN DETAILS

VERMONT AGENCY OF TRANSPORTATION

STANDARD

E-101

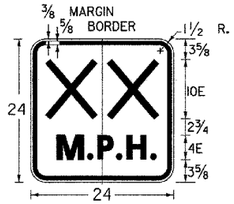

"XX" DENOTES ADVISORY SPEED AS SHOWN ON THE PLANS

W13-1

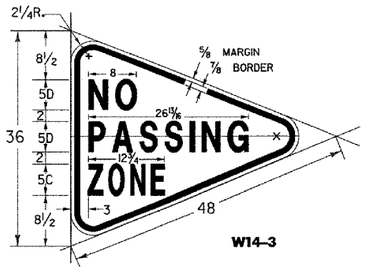

W14-3

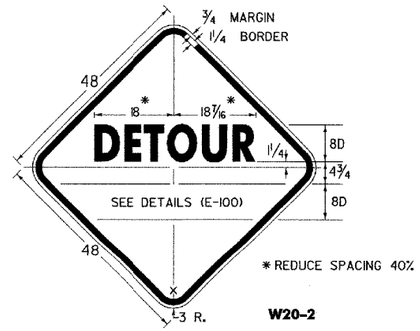

* REDUCE SPACING 40%

W20-2

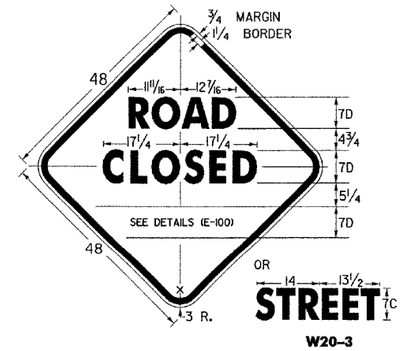

W20-3

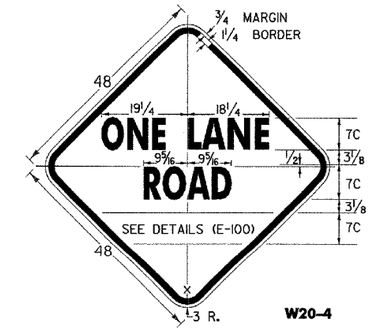

W20-4

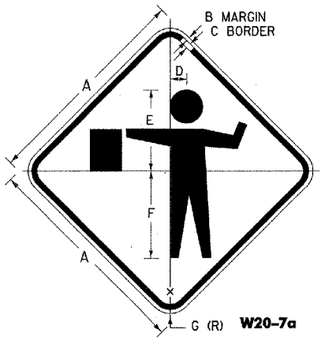

W20-7a

SIGN	DIMENSIONS(INCHES)						
	A	B	C	D	E	F	G
STD.	36	5/8	7/8	2 3/4	13 1/2	14 5/8	2 1/4
FWY.	48	3/4	1 1/4	3 3/4	18	19 1/2	3

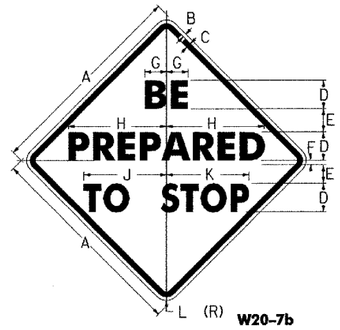

W20-7b

COLORS:
BLACK BORDER AND TEXT (NON RETRORFL.)
ORANGE BACKROUND (RETRORFL.)

W3-4

COLORS:
BLACK BORDER AND TEXT (NON RETRORFL.)
YELLOW BACKROUND (RETRORFL.)

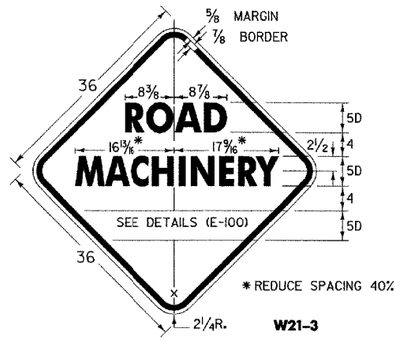

* REDUCE SPACING 40%

W21-3

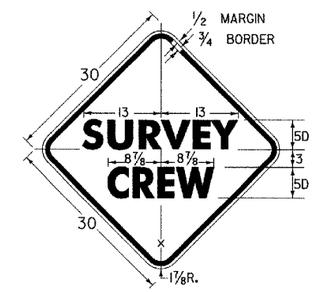

W21-6

SIGN PADDLE FOR FLAGPERSON

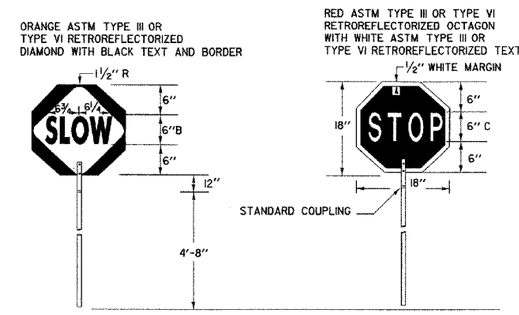

SIGN DETAIL

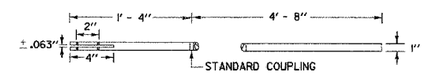

STAFF DETAIL

MATERIALS
THE SIGN MATERIALS SHALL BE 0.063" ALUMINUM WITH COLORS AS INDICATED ON DETAILS.
THE STAFF SHALL BE 3/4" TO 1 1/4" DIAMETER RIGID ALUMINUM CONDUIT/TUBING WITH A WALL THICKNESS OF 0.125", OR 1" TO 1 1/2" DIAMETER RIGID PVC CONDUIT/TUBING WITH 0.125" WALL THICKNESS

MOUNTING
THE STAFF SHALL BE MOUNTED WITH EITHER TWO 1/4" DIAMETER ALUMINUM BOLTS OR TWO 1/4" DIAMETER ALUMINUM RIVETS.

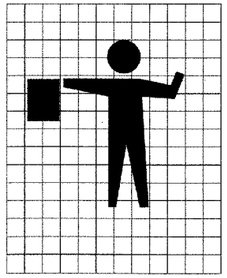

SIGN	DIMENSIONS (INCHES)										
	A	B	C	D	E	F	G	H	J	K	L
MIN.	36	5/8	7/8	6C	3 5/8	7/8	3 3/4	16 3/8	13	13 7/8	2 1/4
STD.	48	3/4	1 1/4	8C	4 7/8	1 1/4	5	21 7/8	17 3/8	18 1/2	3
EXPWY.	60	3/4	1 1/4	9C	5 7/8	1 7/8	5 5/8	24 5/8	19 3/8	20 1/4	3

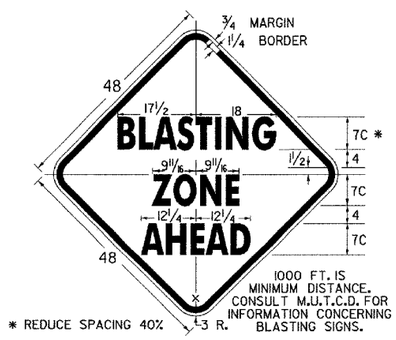

* REDUCE SPACING 40%

W22-1

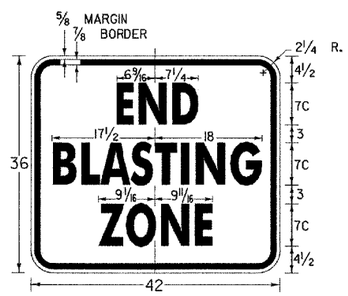

W22-3

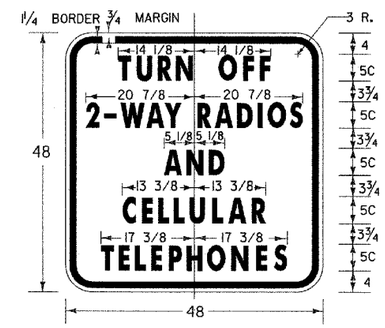

VW22-1

NOTES

SEE STANDARD SHEET E-100 FOR NOTES AND TEXT DETAILS
COLORS FOR SIGNS SHOWN ON THIS SHEET SHALL BE BLACK TEXT, BORDER AND SYMBOLS ON ASTM TYPE III OR TYPE VI RETROREFLECTORIZED ORANGE BACKGROUND, UNLESS OTHERWISE NOTED
SIGN DETAILS INDICATE THE APPROPRIATE COLOR.

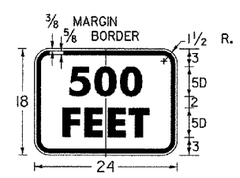

W16-2a

OTHER STDS. REQUIRED: E-100

NOTE: ALL DIMENSIONS SHOWN IN INCHES EXCEPT WHERE NOTED

REVISIONS AND CORRECTIONS

OCT. 30, 1987 - DATE OF ORIGINAL ISSUE
JAN. 23, 1989 - DELETE MOTORCYCLE SYMBOL SIGN AND SPEED SIGN, ADDED TWO SIGNS
OCT. 21, 1992 - ADDED A SIGN, REVISED A SIGN DIMENSION & TYPE ERROR & REVISED TITLE BLOCK
AUG. 08, 1995 - ADDED FLAGGER GRID
JUNE 30, 2003 - CHANGED REFLECTIVE SHEETING TO ASTM TYPE III OR TYPE VI CHANGED TEXT ON W20-7b SIGN

APPROVED

DIRECTOR OF PROGRAM DEVELOPMENT

TRAFFIC OPERATIONS ENGINEER

FEDERAL HIGHWAY ADMINISTRATION

CONSTRUCTION SIGN DETAILS

VERMONT AGENCY OF TRANSPORTATION

STANDARD

E-102

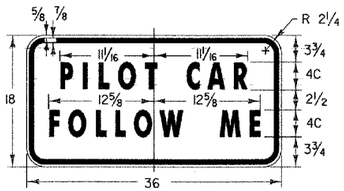

G20-4

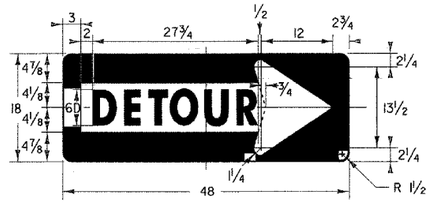

M4-10(R)

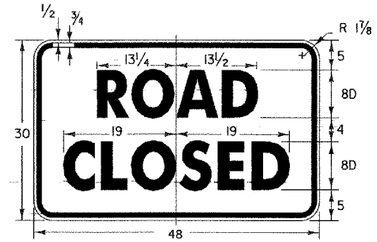

R11-2

COLORS:
BLACK TEXT AND BORDER
WHITE RETROREFLECTORIZED BACKGROUND

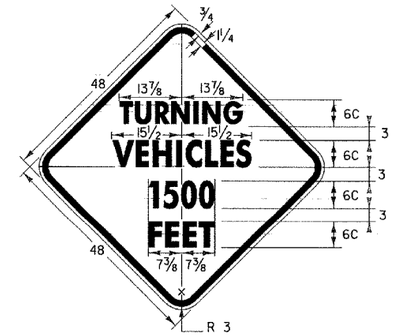

VC-001

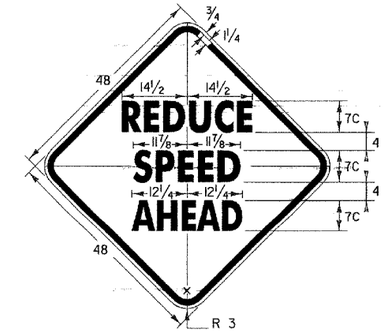

VC-002

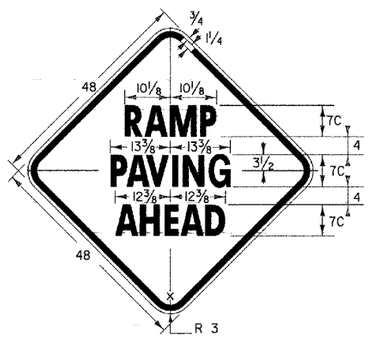

VC-003

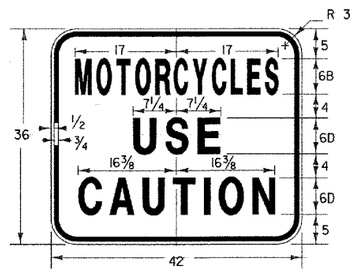

VC-004

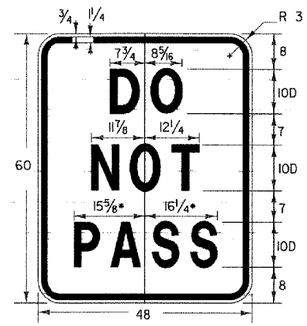

VC-005

• REDUCE SPACING BY 40%

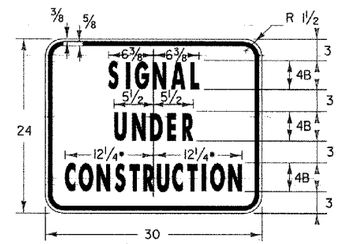

VC-820

• REDUCE SPACING 25%

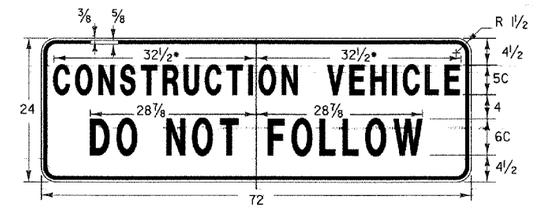

VC-007

• REDUCE SPACING 20%

IT IS SUGGESTED THAT THIS SIGN BE DESIGNED TO FOLD, (DOWN OR ACROSS), BE COVERED, OR BE REMOVED WHEN NOT IN USE. THE SIGN SHOULD ALSO BE MOUNTED AS TO NOT INTERFERE WITH THE VISIBILITY OF DIRECTIONAL OR TAIL LIGHTS AS REQUIRED BY LAW.

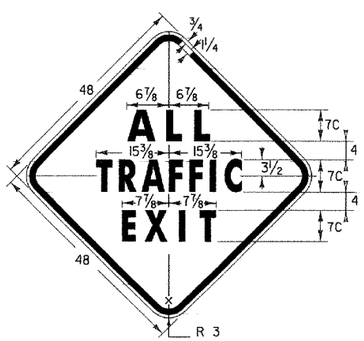

VC-008

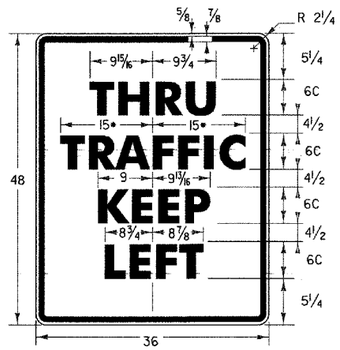

VR-118L

• REDUCE SPACING 25 %

COLORS:
BLACK TEXT AND BORDER
WHITE (RETROREFLECTORIZED) BACKGROUND

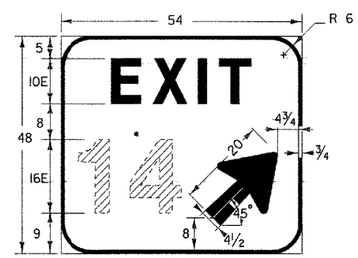

E5-1a

• EXIT NUMBER AS PER PLANS OPTICALLY SPACED

COLORS:
WHITE RETROREFLECTORIZED BORDER, ARROW AND LEGEND
GREEN RETROREFLECTORIZED BACKGROUND

(ALL DIMENSIONS SHOWN IN INCHES EXCEPT WHERE NOTED)

NOTES

SEE STANDARD SHEET E-100 FOR NOTES AND TEXT DETAILS

COLORS FOR SIGNS SHOWN ON THIS SHEET SHALL BE BLACK TEXT, BORDER AND SYMBOLS ON ASTM TYPE III OR TYPE VIII RETROREFLECTIVE ORANGE BACKGROUND, UNLESS OTHERWISE NOTED.

SIGN DETAILS INDICATE THE PROPER COLOR.

OTHER STDS. REQUIRED: E-100, E-151

REVISIONS AND CORRECTIONS

AUG 08, 1995 - DATE OF ORIGINAL ISSUE
MAY 01, 2004 - CHANGED REFLECTIVE SHEETING TO TYPE III

APPROVED

DIRECTOR OF PROGRAM DEVELOPMENT

TRAFFIC OPERATIONS ENGINEER

FEDERAL HIGHWAY ADMINISTRATION

CONSTRUCTION SIGN DETAILS

VERMONT AGENCY OF TRANSPORTATION

STANDARD
E-102A

DROP-OFF ADJACENT TO TRAVELED WAY

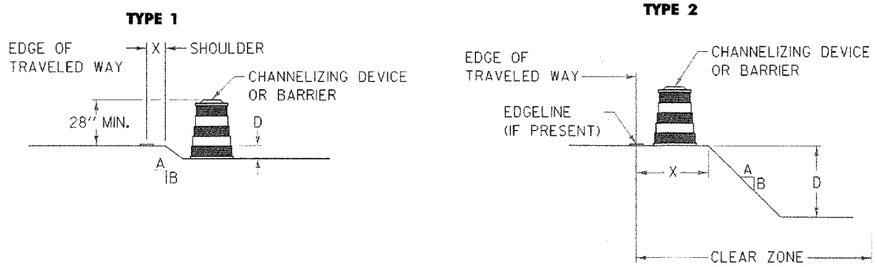

NOTES:

1. CHANNELIZING DEVICES OR BARRIER SHOULD BE PLACED TO MAXIMIZE THE WIDTH OF THE TRAVELED WAY.
2. FOR SPECIFIC REQUIREMENTS USE CHART "A".
3. IF THE DROP-OFF REQUIRES CHANNELIZING DEVICES TO REMAIN IN PLACE OVERNIGHT THEN "LOW SHOULDER" (W8-9) OR "SHOULDER DROP OFF" (W8-9A) SIGNS SHOULD BE INSTALLED.

DROP-OFF BETWEEN ADJACENT TRAVELED LANE

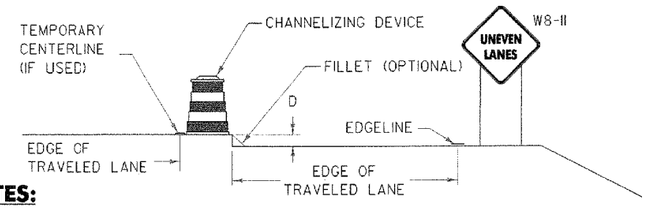

NOTES:

1. WHENEVER A LONGITUDINAL DROP-OFF BETWEEN ADJACENT TRAVELED LANES IS TO BE LEFT OVERNIGHT THEN "UNEVEN LANES" (W8-11) SIGNS AND CHANNELIZING DEVICES SHOULD BE INSTALLED.
2. IF REQUIRED, THE CHANNELIZING DEVICES USED SHALL BE THOSE WHICH MAXIMIZE THE TRAVELED LANE (I.E. CONES, VERTICAL PANELS OR TUBULAR MARKERS).
3. A BITUMINOUS CONCRETE FILLET WITH A 1.5:1 SLOPE MAY BE USED IN PLACE OF CHANNELIZING DEVICES, HOWEVER THE "UNEVEN LANES" (W8-11) SIGNS SHOULD BE INSTALLED REGARDLESS.
4. FOR SPECIFIC REQUIREMENTS USE CHART "A".

DROP-OFF BEYOND SHOULDER OR CURB

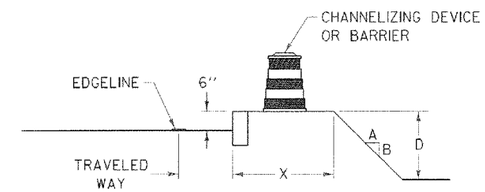

NOTES:

1. CHANNELIZING DEVICES OR BARRIER SHOULD BE PLACED TO MAXIMIZE THE WIDTH OF THE TRAVELED WAY.
2. FOR SPECIFIC REQUIREMENTS USE CHART "A" OR "B" AS APPLICABLE.

CHART "A"
ALL SPEEDS WITH NO CURB

X (FEET)	DROP (D) (INCHES)	A/B SLOPE	DEVICE REQUIRED
0 TO 4'	LESS THAN 2"	ANY	NONE
	2" TO 6"	1.5:1 OR FLATTER	NONE
		STEEPER THAN 1.5:1	CHANNELIZING DEVICE
	GREATER THAN 6"	3:1 OR FLATTER	NONE
		STEEPER THAN 3:1	BARRIER/CHANNELIZING DEVICE
4' TO 10'	LESS THAN 6"	ANY	NONE
	6" TO 12"	3:1 OR FLATTER	NONE
		STEEPER THAN 3:1	BARRIER/CHANNELIZING DEVICE
	GREATER THAN 12"	3:1 OR FLATTER	NONE
		STEEPER THAN 3:1	BARRIER/CHANNELIZING DEVICE
10' TO CZ	LESS THAN OR EQUAL TO 12"	ANY	NONE
	GREATER THAN 12"	3:1 OR FLATTER	NONE
		STEEPER THAN 3:1	BARRIER

NOTES:

1. THE MINIMUM CLEAR ZONE FOR FREEWAYS IS TO BE DETERMINED PER THE CURRENT "AMERICAN ASSOCIATION OF STATE HIGHWAY TRANSPORTATION OFFICIALS" (AASHTO) ROADSIDE DESIGN GUIDE. ALL OTHER HIGHWAYS WILL BE DETERMINED PER THE CURRENT "VERMONT STATE STANDARDS" BOOK.
2. CHANNELIZING DEVICES MAY BE USED INSTEAD OF BARRIER FOR SHORT TERM (ONE-DAY) OPERATIONS.
3. ON BORDERLINE CONDITIONS, THE ENGINEER SHOULD DETERMINE WHICH TREATMENT IS ADEQUATE FOR THE EXISTING CONDITIONS.

CHART "B"
40 MPH OR LESS WITH CURB

X (FEET)	DROP (D) (INCHES)	DEVICE REQUIRED
0-10'	LESS THAN OR EQUAL TO 12"	NONE
0-10'	GREATER THAN 12"	CHANNELIZING DEVICE
GREATER THAN 10'	ANY	NONE

NOTES:

1. USE THIS CHART FOR DROP-OFF BEYOND SHOULDER OR CURB.
2. USE THIS CHART FOR VERTICAL CURBS OF SIX INCHES OR GREATER. FOR LOWER OR MOUNTABLE CURBS USE CHART "A".
3. FOR CURBED SECTIONS WITH POSTED SPEED ABOVE 40 MPH, USE CHART "A".

GENERAL NOTES:

1. THESE CONDITIONS AND TREATMENTS ARE ONLY PART OF THE TRAFFIC CONTROL SYSTEM AND SHOULD BE USED IN ADDITION TO THE PROPER WORK ZONE SIGNING.
2. THE FOLLOWING ARE ACCEPTABLE CHANNELIZING DEVICES:

   A. VERTICAL PANEL
   B. TYPE I OR TYPE II BARRICADE
   C. PLASTIC DRUM
   * D. CONE - WHERE APPLICABLE
   E. TUBULAR MARKERS (MUTCD)

   * IF CHANNELIZING DEVICES ARE REQUIRED TO REMAIN IN PLACE DURING NIGHTTIME HOURS, CONES SHALL BE A MINIMUM OF 36 INCHES HIGH.

3. WHERE BARRIER IS CALLED FOR, EITHER CONCRETE BARRIER (JERSEY SHAPE), STEEL BEAM GUARDRAIL OR OTHER FEDERAL HIGHWAY ADMINISTRATION (FHWA) APPROVED BARRIER MAY BE USED.

   BARRIER ENDS FACING ONCOMING TRAFFIC SHALL BE TAPERED BEYOND THE CLEAR ZONE OR PROTECTED WITH AN APPROVED END TREATMENT DESIGNED FOR THE POSTED SPEED LIMIT OF THE ROADWAY.

4. CHANNELIZING DEVICE SPACING ALONG A LONGITUDINAL DROP-OFF (TANGENT) SHALL BE AS FOLLOWS:

   TANGENT - CHANNELIZING DEVICES SHALL BE SPACED "2S" ("S" IS THE POSTED SPEED LIMIT IN FEET) APART.

5. "LOW SHOULDER" (W8-9), "SHOULDER DROP OFF" (W8-9A) OR "UNEVEN LANES" (W8-11) SIGNS, WHEN USED, SHOULD BEGIN PRIOR TO THE DROP-OFF CONDITION AND SHOULD BE REPEATED EVERY 1500 FEET.
6. USE CHART "A" FOR DROP OFFS CREATED BY PROJECT ACTIVITIES.

OTHER STDS. REQUIRED: **E-101, E-106, E-107, E-107A**

REVISIONS AND CORRECTIONS

SEPT. 20, 1993 - ORIGINAL APPROVAL DATE
AUG. 18, 1995 - ADDED SHOULDER WARNING NOTE
DEC. 8, 2008 - GENERAL UPDATE
JUN. 8, 2009 - MINOR REVISIONS

APPROVED

Kevin A. Marshia
HIGHWAY, SAFETY & DESIGN ENGINEER

Richard Fetwatt
DIRECTOR OF PROGRAM DEVELOPMENT

Mark D. Richter
FEDERAL HIGHWAY ADMINISTRATION

CONSTRUCTION ZONE LONGITUDINAL DROP OFFS

VERMONT AGENCY OF TRANSPORTATION

STANDARD
E-108