Proposed Bridge Improvement Project

Wardsboro BF 013-1(22)

Bridge #73

Concrete:

Mix Designation: P60TER

1. Specified Mix Design -	5000 PSI
2. Proposed Mix Design -	6000 PSI
3. Striping Strength -	3000 PSI
4. Handling Strength -	3000 PSI
5. Shipping Strength -	5000 PSI
6. Install Strength -	5000 PSI
7. Traffic Loading -	5000 PSI

Fabrication Tolerances:

1. Width	±1/4"
2. Height	±1/4"
3. Length	±1/2"
4. Rebar Cover	2" Min. (Unless Noted Otherwise)
5. Rebar Spacing	±1"
6. Rebar Clearance	±1/4"
7. Insert Placement	±1/4"

Design Notes:

1. Design is in accordance w/ ASTM C1577, PCI MNL135, VAOT540 & AASHTO 2010 LRFD Bridge Design Specs Fifth Edition
2. Any conflict between tolerances listed above shall result in the usage of the stricter tolerance
3. Design Live Load = HL-93
4. Materials and manufacturing shall conform to ASTM C1433
5. Earth Fill Design: 0'-0" to 2'-0"
6. Soil Weight: 130 pcf

Installation Sequence:

1. Sub base for box culvert / cut off walls to be compacted and set to appropriate grades/slopes
2. Precast cut off walls to be installed
3. All elevations are to be checked and verified they match those of plan set
4. Begin sequence of installing all box culvert sections
5. Clean granular backfill for structures used for backfill of footers & of box culvert so water can reach weep holes if applicable
6. Fill all lifting holes and bolt pockets with non-shrink grout or repair mortar
7. ASTM C1675-11 box culvert installation guidelines shall be followed.

Reinforcing:

General Notes:

1. Reinforing Steel -
   a. Precast box sections, headwalls, & cut off walls shall be level I epoxy coated bar ASTM A615
2. Materials and manufacturing shall conform to ASTM C1433
3. Bar tied at every intersection.

Tolerances:

1. Spacing ±1"
2. Clearance ±1/4"

Lap Lengths:

1. Per AASHTO 5.11.2.1.1 & 5.11.5.3.1
   Lap Length:
   #4 Bar=21"
   #5 Bar=26"
   #6 Bar=31"

Reinforcing Weights:

#4 Bar = 7,428 lbs
#5 Bar = 6,571 lbs
#6 bar = 17,670 lbs

Joint Treatment:

Vertical Seams:

Per VTrans Approved Product List 780.02
Overhead & Vertical Concrete Repair Mortar
Applied by Site Contractor

Horizontal Seams / Grout:

Per VTrans Approved Product List 707.03
Mortar, Type IV
Applied by Site Contractor

Waterproofing:

1. Silane 40 by BASF (now called Master Protect H 440HZ) applied to both headwall and all four wingwalls.(Interior of box culvert will not receive silane)

Miscellaneous:

1. All exposed wingwall hardware to be zinc plate galvanized.
2. All box culvert bolt pocket hardware to be plain steel
3. All Exposed Edges of Concrete Shall be Chamfered 1"x1"

Legend:

- (A) 2"Ø PVC Sleeve
- (B) 4"Ø PVC Sleeve
- (C) Mechanical Bolt Pocket (A.L. Patterson w/ 1"Ø Galv. Coil Rod)
- (D) Oxford A750-7 Lifting Device
- (E) 1"Ø x 12" CX-9 Coil Loop Insert
- (F) 5/8" FI-42 Flared Loop Ferrule Insert
- (G) Continuous Keyway (See Detail on Page 5 of 6)
- (H) Solid Lines Indicate 1" Chamfered Edge (Isometrics)

7/17/14

STATE OF VERMONT
GARY K. MUNKELT
NO. 6291
REGISTERED
PROFESSIONAL ENGINEER

STRUCTURAL DESIGN ONLY

Gary K. Munkelt & Associates
Structural Consulting Engineers
1180 Welsh Rd, Suite 190
North Wales, PA 19454
Ph: 215-855-8713 F: 215-855-8714

CONTRACTORS VTSPE: Revisions: -Changes per Vtrans 6/30/14 Review

PRECAST CONCRETE BOX CULVERT SHOP DRAWINGS (#14442-1)

SUPERVISOR: M. WHEELER
DETAILER: I. ADAMS
CHECKER: E. Barendse
ENGINEER: Gary K. Munkelt & Assoc.

PROJECT NAME: Wardsboro
PROJECT #: BF 013-1(22)
LOCATION: Wardsboro, VT

FABRICATOR:
193 INDUSTRIAL AVE.
WILLISTON, VT 05495
Ph: (802) 658-0201

SD Ireland PRECAST

07/15/2014 | COVER_PAGE | 1_OF_6

Plan View

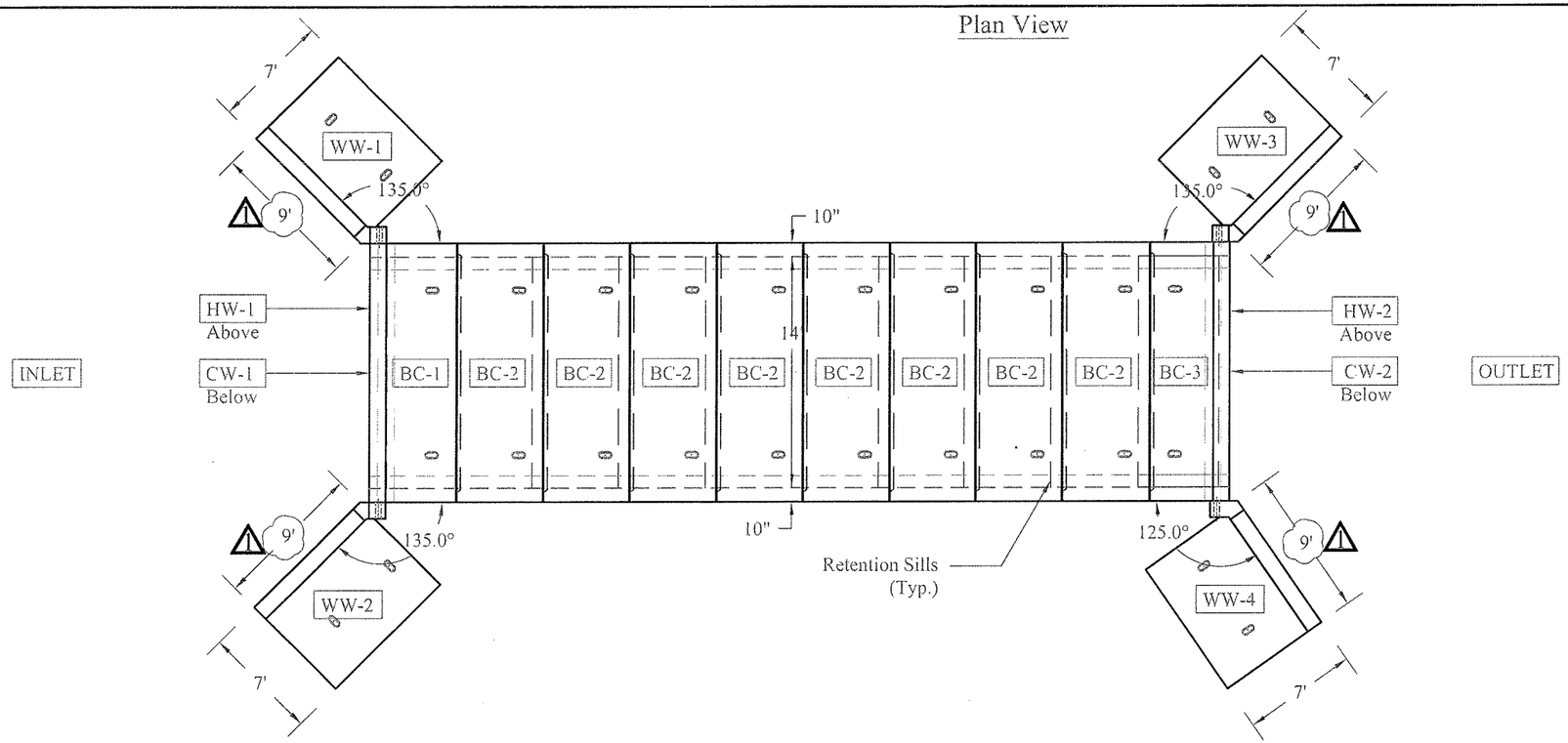

Table of Units				
Name	Qty	Length	Vol.(CY)	Wt.(lbs.)*
BC-1**	1	5'-2¾"	9.56	39,350
BC-2*	8	5'-3"	9.41	37,654
BC-3**	1	4'-10¾"	9.54	37,950
WW-1	1	9'-6"	6.35	25,400
WW-2	1	9'-6"	6.35	25,400
WW-3	1	9'-6"	6.35	24,280
WW-4	1	9'-6"	6.34	24,600
CW-1	1	15'-8"	.57	2,280
CW-2	1	15'-8"	.59	2,360

* Baffle Weight Included in BC-2
** Baffle and Headwall Included in BC-1 and BC-3

Elevation View

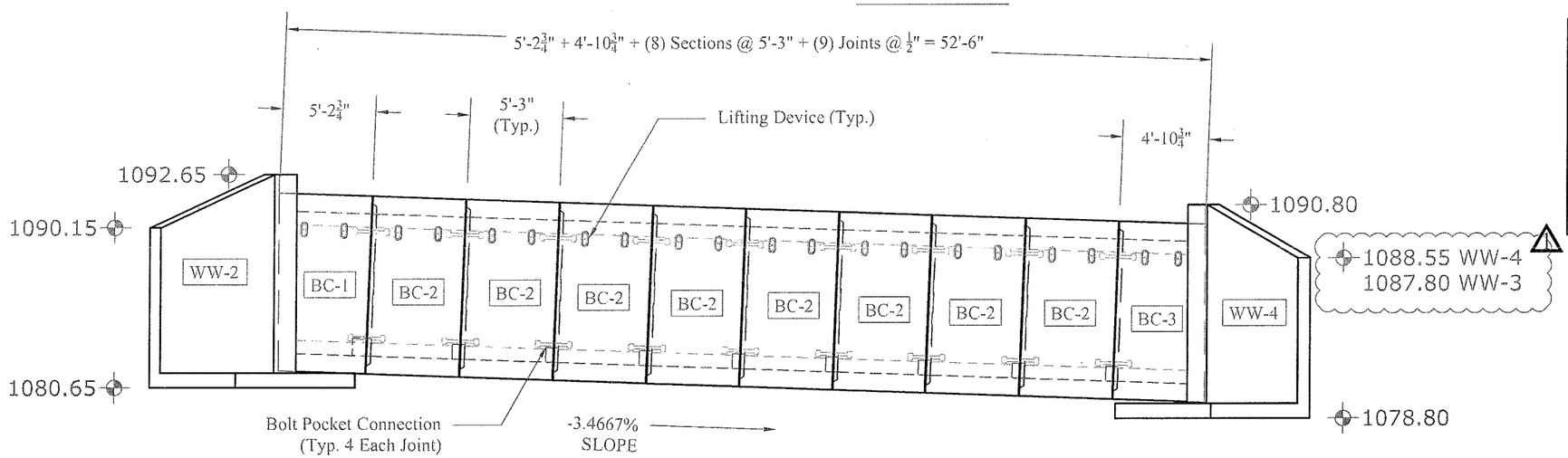

Culvert Specifications

Inside Dimensions	8'-0"x14'-0"
Waterway Area	84 Sq. Ft.
Top Slab Thickness	12"
Side Wall Thickness	10"
Bottom Slab Thickness	12"

STATE OF VERMONT
GARY K. MUNKELT
NO. 6291
REGISTERED
PROFESSIONAL ENGINEER

STRUCTURAL DESIGN ONLY

Gary K. Munkelt & Associates
Structural Consulting Engineers
1180 Welsh Rd, Suite 190
North Wales, PA 19454
Ph: 215-855-8713 F: 215-855-8714

CONTRACTORS VTSPE:

- Ⓐ 2"Ø PVC Sleeve
- Ⓑ 4"Ø PVC Sleeve
- Ⓒ Mechanical Bolt Pocket (A.L. Patterson w/ 1"Ø Coil Rod)
- Ⓓ Oxford A750-7 Lifting Device
- Ⓔ 1"Øx12" CX-9 Coil Loop Insert
- Ⓕ ⅝" FI-42 Flared Loop Ferrule Insert
- Ⓖ 1 1/2" x 3 1/2" Continuous Keyway
- Ⓗ Solid Lines Indicate 1" Chamfer

PRECAST CONCRETE BOX CULVERT SHOP DRAWINGS (#14442-1)

SUPERVISOR: M. WHEELER
DETAILER: I. ADAMS
CHECKER: E. Barendse
ENGINEER: Gary K. Munkelt & Assoc.

PROJECT NAME: Wardsboro
PROJECT #: BF 013-1(22)
LOCATION: Wardsboro, VT

07/15/2014

FABRICATOR:
193 INDUSTRIAL AVE.
WILLISTON, VT 05495
Ph: (802) 658-0201

SD Ireland PRECAST

PLAN_ELEVATION

BC-1 Detail

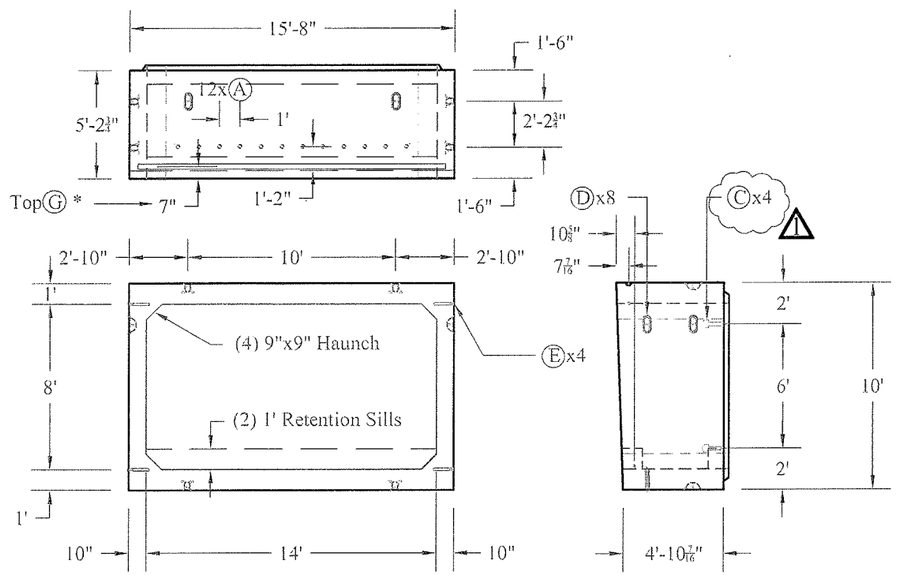

*Keyway to Stop 3" Short of Each Side

BC-2 Detail

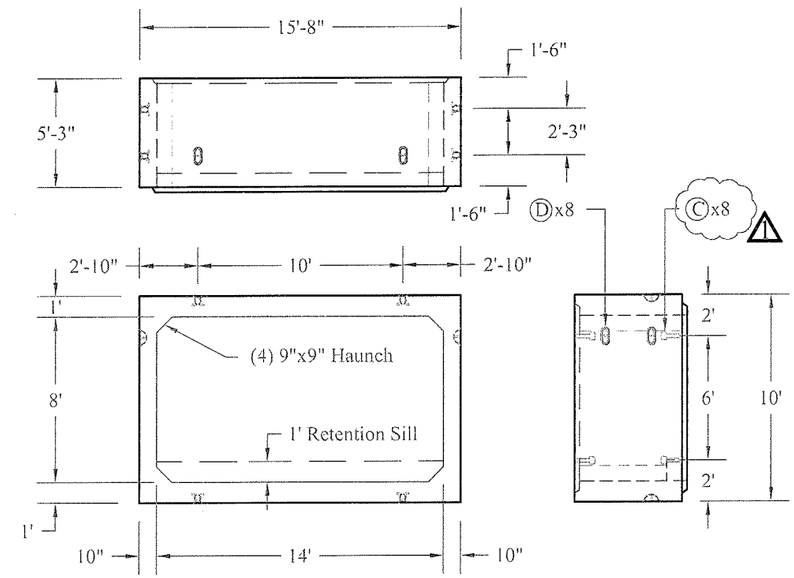

BC-3 Detail

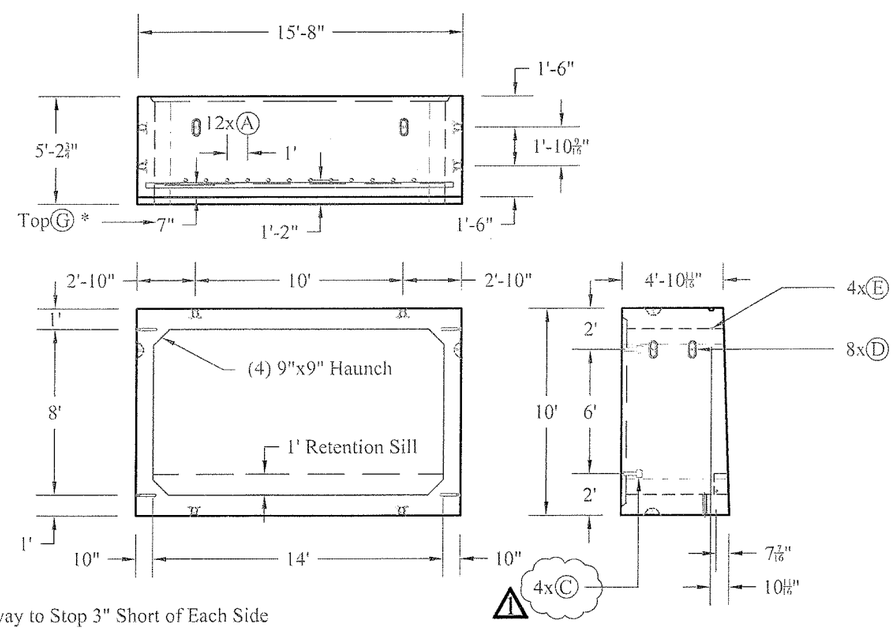

*Keyway to Stop 3" Short of Each Side

Box Secion Reinforcement Detail

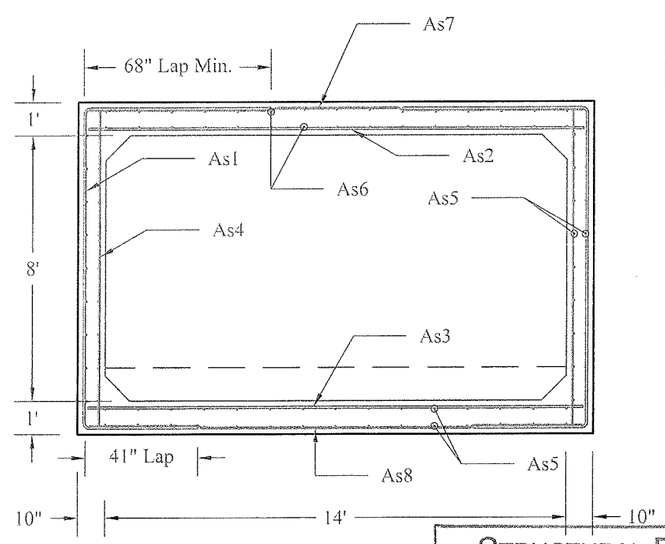

Rebar Schedule

Mark	Size	Max Spacing	Length	Type	A	B	C
As1	#6	6"	225"	Bent	68"	116"	41"
As2	#6	6"	184"	Str.	184"		
As3	#5	5"	184"	Str.	184"		
As4	#4	9"	116"	Str.	116"		
As5	#4	12"	Varies	Str.	Varies		
As6	#5	12"	Varies	Str.	Varies		
As7	#4	9"	184"	Str.	184"		
As8	#4	9"	184"	Str.	184"		

Notes: 2" Clear Typical Unless Noted Otherwise

STATE OF VERMONT
GARY K. MUNKELT
NO. 6291
REGISTERED PROFESSIONAL ENGINEER

7/17/14

STRUCTURAL DESIGN ONLY

Gary K. Munkelt & Associates
Structural Consulting Engineers
1180 Welsh Rd, Suite 190
North Wales, PA 19454
Ph: 215-855-8713 F: 215-855-8714

CONTRACTORS VTSPE:

- (A) 2"Ø PVC Sleeve
- (B) 4"Ø PVC Sleeve
- (C) Mechanical Bolt Pocket (A.L. Patterson w/ 1"Ø Coil Rod)
- (D) Oxford A750-7 Lifting Device
- (E) 1"Øx12" CX-9 Coil Loop Insert
- (F) ⅝" FI-42 Flared Loop Ferrule Insert
- (G) 1 1/2" x 3 1/2" Continuous Keyway
- (H) Solid Lines Indicate 1" Chamfer

PRECAST CONCRETE BOX CULVERT SHOP DRAWINGS (#14442-1)

SUPERVISOR: M. WHEELER
DETAILER: I. ADAMS
CHECKER: E. Barendse
ENGINEER: Gary K. Munkelt & Assoc.

PROJECT NAME: Wardsboro
PROJECT #: BF 013-1(22)
LOCATION: Wardsboro, VT

FABRICATOR:
193 INDUSTRIAL AVE.
WILLISTON, VT 05495
Ph: (802) 658-0201

SD Ireland PRECAST

07/15/2014

BOX_SECTIONS

WW-1 Detail

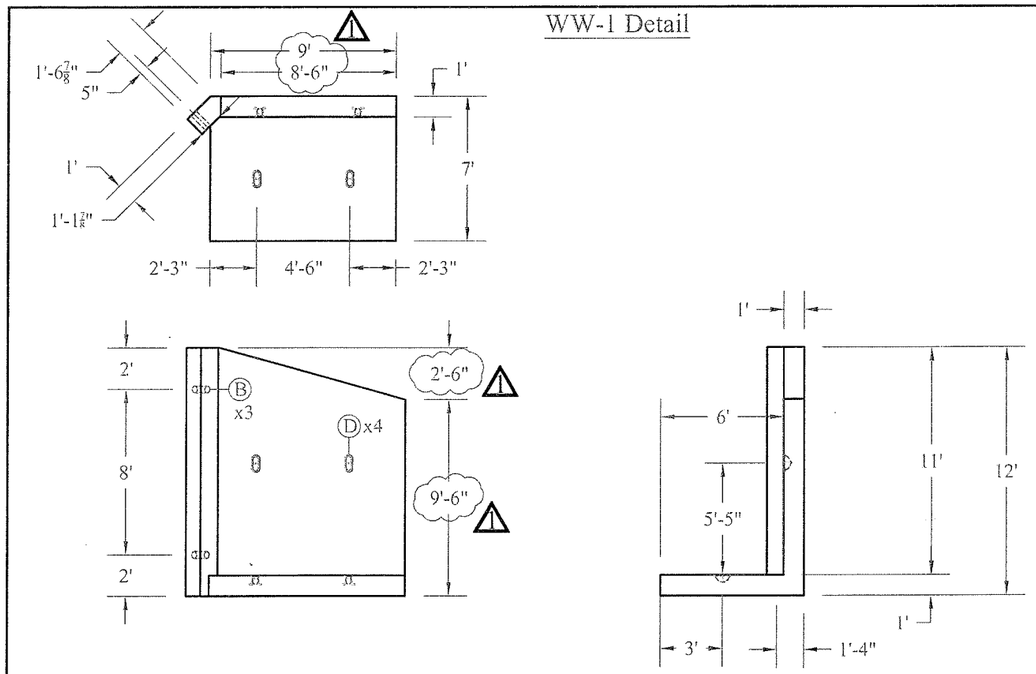

WW-2 Detail

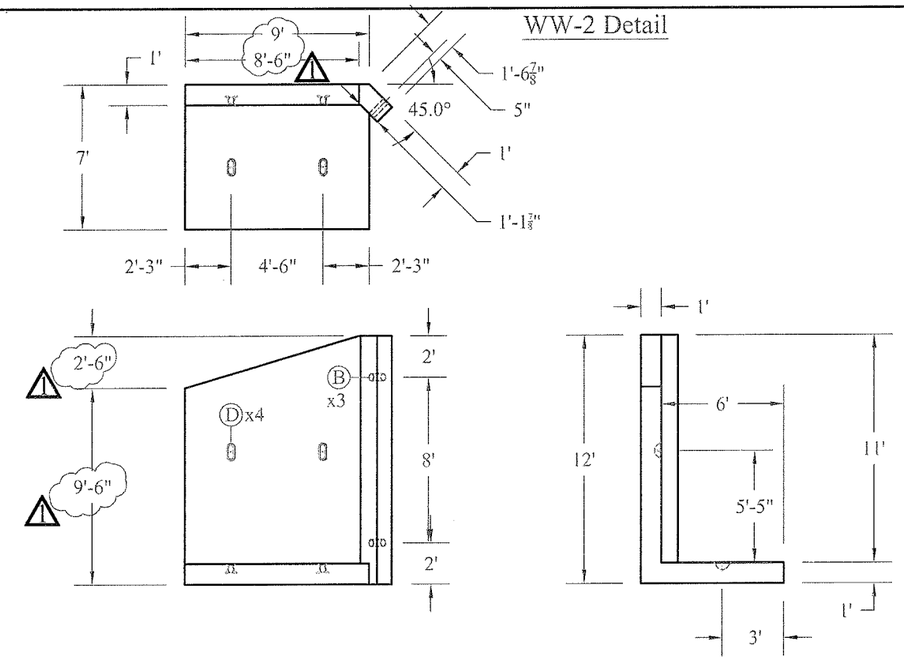

WW-3 Detail

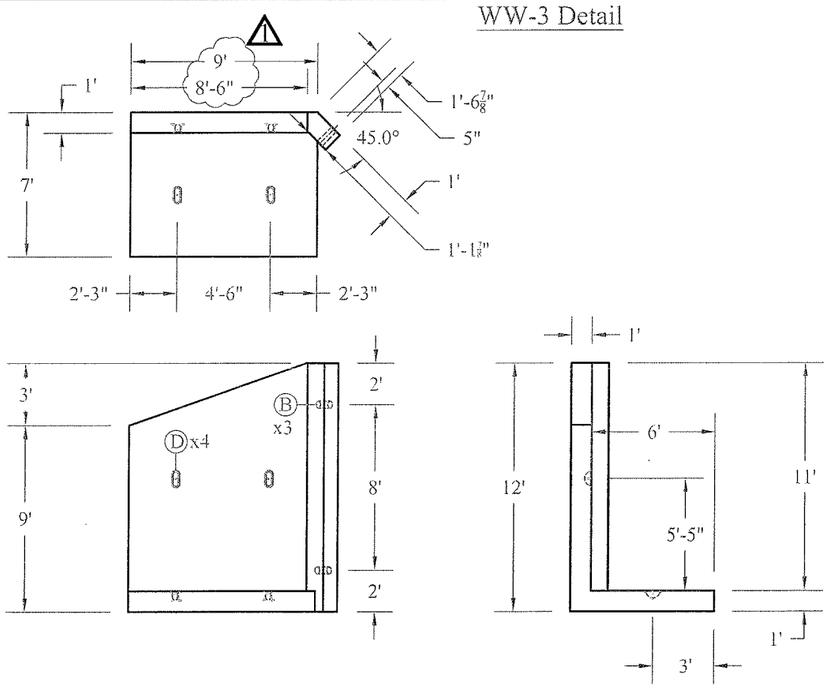

WW-4 Detail

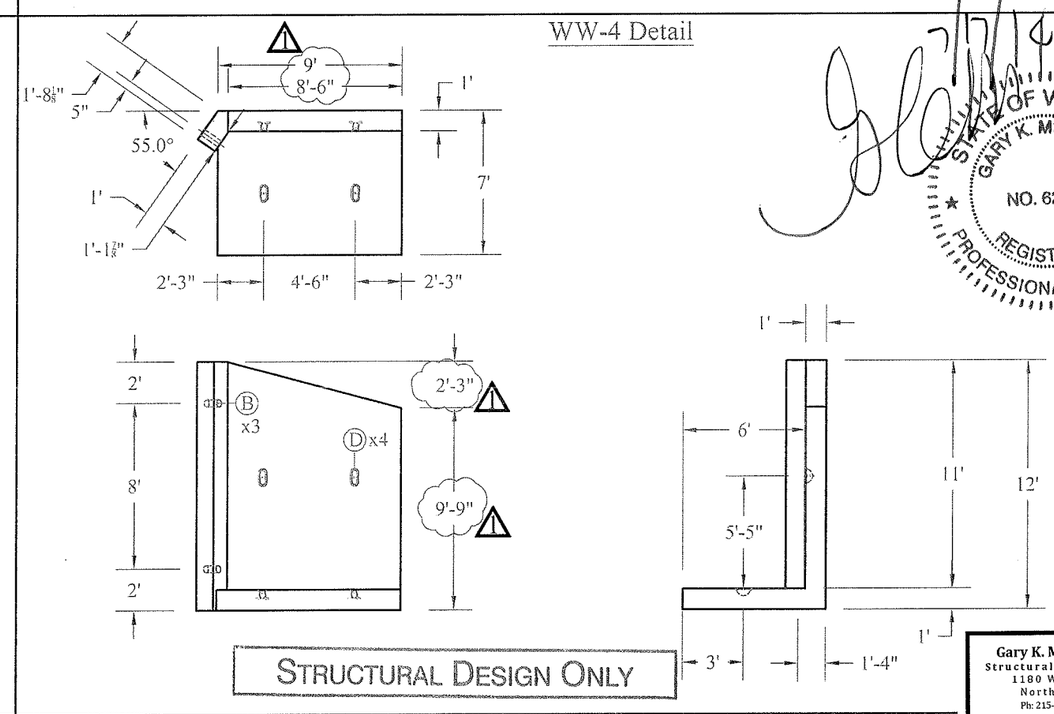

STATE OF VERMONT
GARY K. MUNKELT
NO. 6291
REGISTERED PROFESSIONAL ENGINEER

7/15/14

STRUCTURAL DESIGN ONLY

Gary K. Munkelt & Associates
Structural Consulting Engineers
1180 Welsh Rd, Suite 190
North Wales, PA 19454
Ph: 215-855-8713 F: 215-855-8714

CONTRACTORS VISPE:

- Ⓐ 2"Ø PVC Sleeve
- Ⓑ 4"Ø PVC Sleeve
- Ⓒ Mechanical Bolt Pocket (A.L. Patterson w/ 1"Ø Coil Rod)
- Ⓓ Oxford A750-7 Lifting Device
- Ⓔ 1"Ø×12" CX-9 Coil Loop Insert
- Ⓕ 5/8" FI-42 Flared Loop Ferrule Insert
- Ⓖ 1 1/2" x 3 1/2" Continuous Keyway
- Ⓗ Solid Lines Indicate 1" Chamfer

PRECAST CONCRETE BOX CULVERT SHOP DRAWINGS (#14442-1)

SUPERVISOR: M. WHEELER
DETAILER: I. ADAMS
CHECKER: E. Barendse
ENGINEER: Gary K. Munkelt & Assoc.

PROJECT NAME: Wardsboro
PROJECT #: BF 013-1(22)
LOCATION: Wardsboro, VT

FABRICATOR:
193 INDUSTRIAL AVE.
WILLISTON, VT 05495
Ph: (802) 658-0201

SD Ireland PRECAST

07/15/2014 | WINGWALLS | 4_OF_6

HW-1 Detail

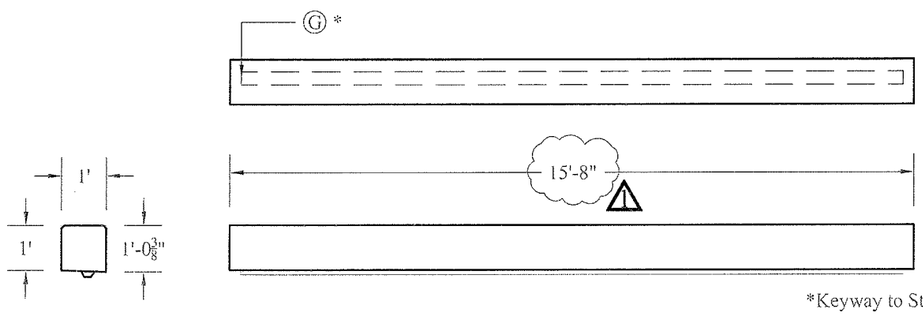

*Keyway to Stop 3" Short of Each Side

HW-2 Detail

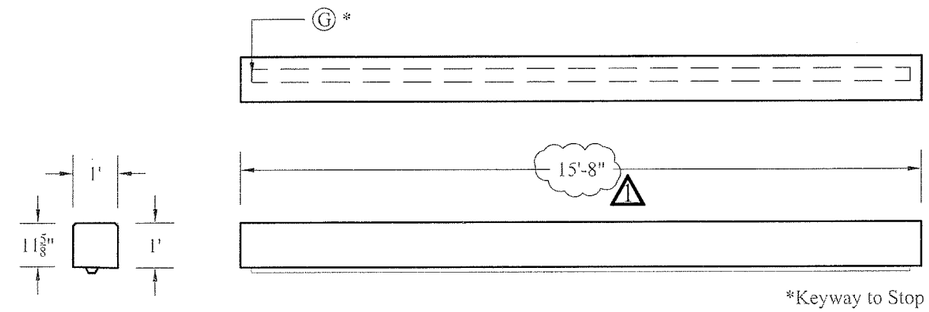

*Keyway to Stop 3" Short of Each Side

HW-1 & HW-2 Isometric View

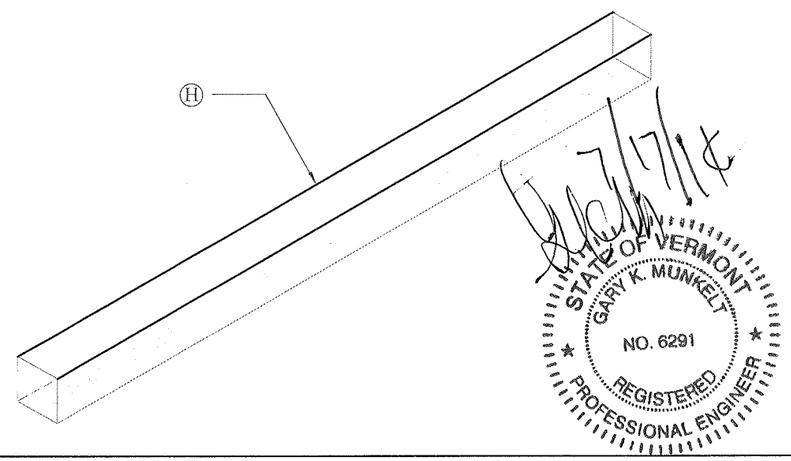

STATE OF VERMONT
GARY K. MUNKELT
NO. 6291
REGISTERED
PROFESSIONAL ENGINEER

Cutoff Wall Rebar Detail

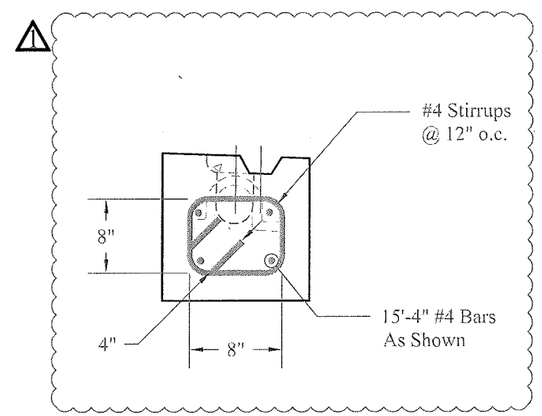

Head Wall Rebar Detail

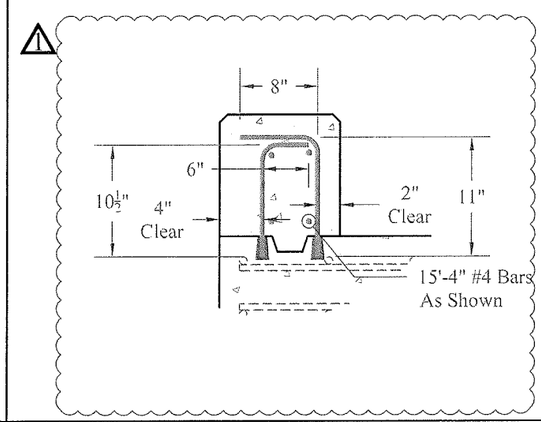

CW-1/2 Detail

STRUCTURAL DESIGN ONLY

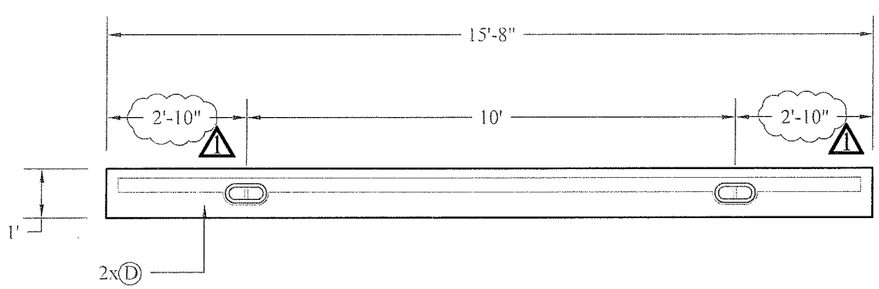

CW-1 Detail

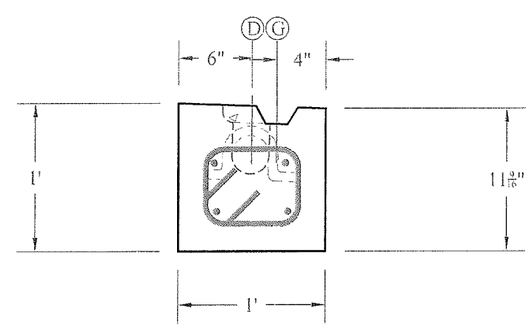

Note: 2" Clear Reinforcement Cover

CW-2 Detail

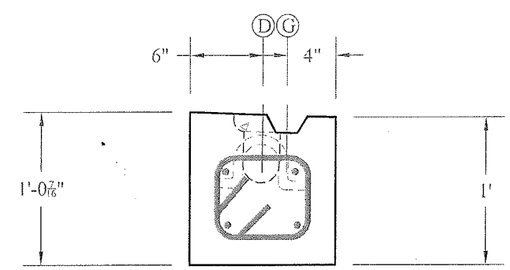

Note: 2" Clear Reinforcement Cover

Gary K. Munkelt & Associates
Structural Consulting Engineers
1180 Welsh Rd, Suite 190
North Wales, PA 19454
Ph: 215-855-8713 F: 215-855-8714

CONTRACTORS VTSPE:

- Ⓐ 2"Ø PVC Sleeve
- Ⓑ 4"Ø PVC Sleeve
- Ⓒ Mechanical Bolt Pocket (A.L. Patterson w/ 1"Ø Coil Rod)
- Ⓓ Oxford A750-7 Lifting Device
- Ⓔ 1"Øx12" CX-9 Coil Loop Insert
- Ⓕ ⅝" FI-42 Flared Loop Ferrule Insert
- Ⓖ 1 1/2" x 3 1/2" Continuous Keyway
- Ⓗ Solid Lines Indicate 1" Chamfer

PRECAST CONCRETE BOX CULVERT SHOP DRAWINGS (#14442-1)

SUPERVISOR: M. WHEELER
DETAILER: I. ADAMS
CHECKER: E. Barendse
ENGINEER: Gary K. Munkelt & Assoc.

PROJECT NAME: Wardsboro
PROJECT #: BF 013-1(22)
LOCATION: Wardsboro, VT

FABRICATOR:
193 INDUSTRIAL AVE.
WILLISTON, VT 05495
Ph: (802) 658-0201

SD Ireland PRECAST

07/15/2014

HEADWALLS_CUTOFFWALLS

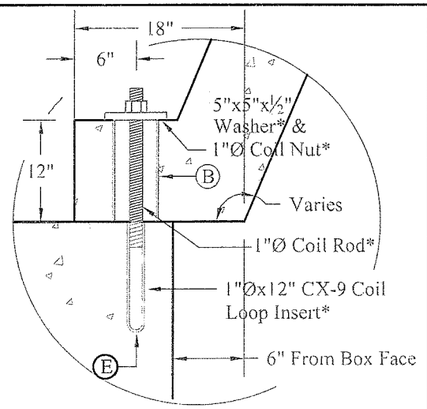

Wing Wall to Box Culvert Connection

See Page 5 for bar Detail

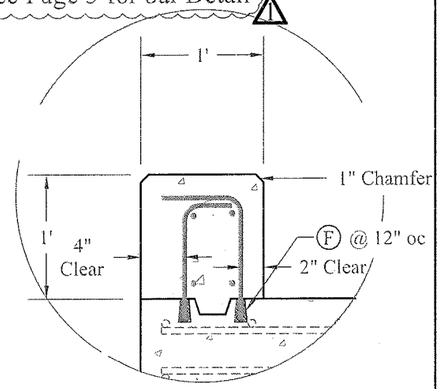

Head Wall to Box Culvert Connection

Retention Sill Detail

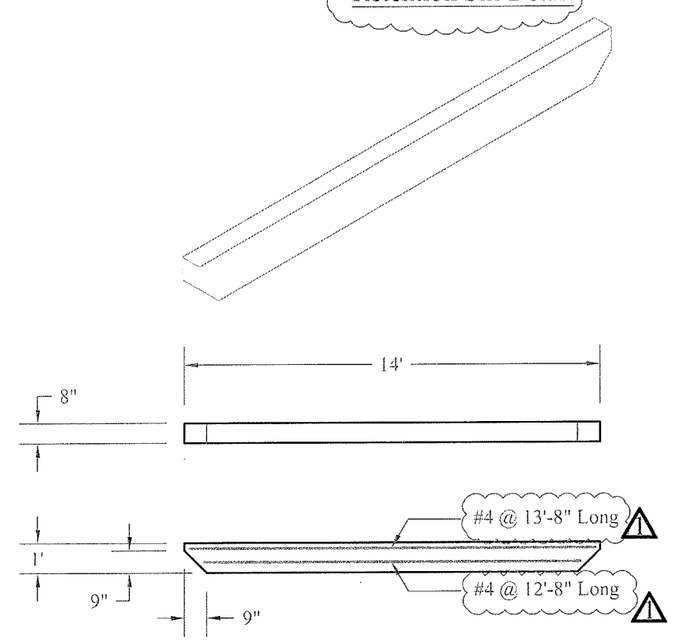

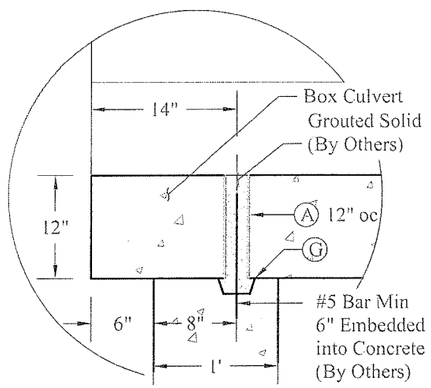

Culvert to Cut Off Wall Connection

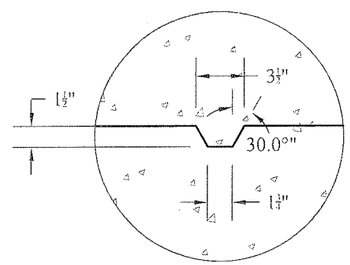

Keyway Detail

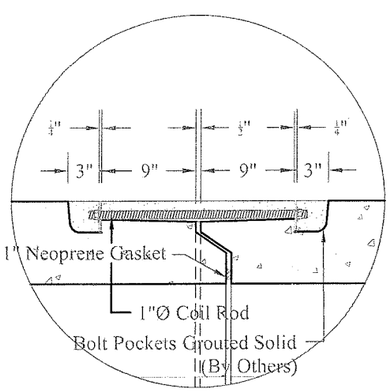

Bolt Pocket Connection Detail

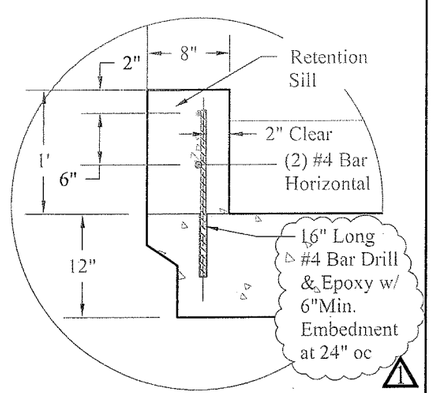

Retention Sill Reinforcing Detail

Wing Wall Reinforcement

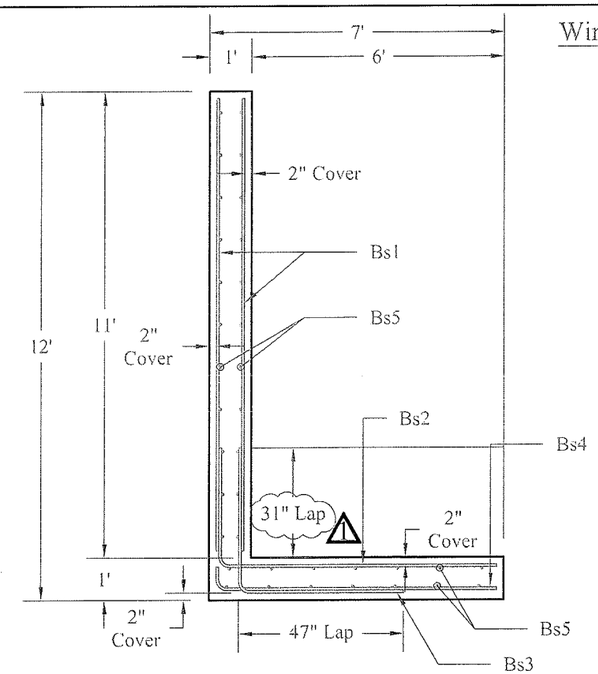

Rebar Schedule						
Mark	Size	Max Spacing	Length	Type	A	B
Bs1	#6	8"	Varies	Str		
Bs2	#6	8"	113"	Bent	33"	80"
Bs3	#6	8"	88"	Bent	41"	47"
Bs4	#6	8"	88"	Bent	8"	80"
Bs5	#5	12"	Varies	Str		

Notes: 2" Clear Typical Unless Noted Otherwise

Bent Bar Guide

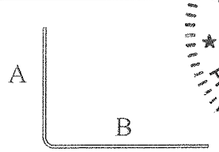

STATE OF VERMONT
GARY K. MUNKELT
NO. 6291
REGISTERED
PROFESSIONAL ENGINEER

STRUCTURAL DESIGN ONLY

Gary K. Munkelt & Associates
Structural Consulting Engineers
1180 Welsh Rd, Suite 190
North Wales, PA 19454
Ph: 215-855-8713 F: 215-855-8714

CONTRACTORS VTSPE:

- Ⓐ 2"Ø PVC Sleeve
- Ⓑ 4"Ø PVC Sleeve
- Ⓒ Mechanical Bolt Pocket (A.L. Patterson w/ 1"Ø Coil Rod)
- Ⓓ Oxford A750-7 Lifting Device
- Ⓔ 1"Øx12" CX-9 Coil Loop Insert
- Ⓕ ⅝" FL-42 Flared Loop Ferrule Insert
- Ⓖ 1 1/2" x 3 1/2" Continuous Keyway
- Ⓗ Solid Lines Indicate 1" Chamfer

PRECAST CONCRETE BOX CULVERT SHOP DRAWINGS (#14442-1)

SUPERVISOR: M. WHEELER
DETAILER: I. ADAMS
CHECKER: E. Barendse
ENGINEER: Gary K. Munkelt & Assoc.

PROJECT NAME: Wardsboro
PROJECT #: BF 013-1(22)
LOCATION: Wardsboro, VT

FABRICATOR:
193 INDUSTRIAL AVE.
WILLISTON, VT 05495
Ph: (802) 658-0201

SD Ireland PRECAST

07/15/2014

CONNECTIONS

6_OF_6