DUFRESNE GROUP CONSULTING ENGINEERS

1996 Depot Street, Manchester Center, VT 05255 (t) 802.768.8291 | (f) 802.768.8315 | (e)dg_manchester@dufresnegroup.com www.dufresnegroup.com

TABLE OF CONTENTS
ERECTION AND EXCAVATION PLAN
WARDSBORO BF 013-1(21)
WARDSBORO, VERMONT
August 14, 2014

GENERAL

EXCAVATION

ERECTION

ATTACHMENTS PROVIDED BY KUBRICKY CONSTRUCTION CORP AND VALLEY CRANE SERVICES, INC.:

- DEMAG AC160 Dimensional Cut Sheet
- Crane Lift Worksheet
- Schematic Plan with center pin locations
- Sling Cut Sheet and Schematic

STATE OF VERMONT
CHRISTINA M. LEGERE
NO. 73343
CIVIL
LICENSED
PROFESSIONAL ENGINEER

Christina Legere
8·14·14

54 Main Street, P.O. Box B, Windsor, VT 05089 (t) 802.674.2904 | (f) 802.674.2913 | (e) info@dufresnegroup.com
297 South Main Street, Barre, VT 05641 (t) 802.479.3698 | (f) 802.479.2261 | (e) d_g_barre@dufresnegroup.com
459 Portland St., Suite 102, St. Johnsbury, VT 05819 (t) 802.748.8605 | (f) 802.748.4512 | (e) d_g_stj@dufresnegroup.com
1996 Depot Street, Manchester Center, VT 05255 (t) 802.768.8291 | (f) 802.768.8315 | (e) dg_manchester@dufresnegroup.com
Dufresne Group is owned by Dufresne & Associates, PC

ERECTION AND EXCAVATION PLAN
WARDSBORO BF 013-1(21)
WARDSBORO, VERMONT
August 14, 2014

General

The Wardsboro BF 013-1(21) box culvert project will occur when Route 100 is temporarily closed. The culvert installation will be in accordance with the Contract Documents and ASTM C1675-11 *Standard Practice for Installation of Precast Reinforced Concrete Monolithic Box Sections for Culverts, Storm Drains and Sewers.*

Excavation

The roadway and subsoil will be excavated as necessary for installation of the 16 foot wide (outside dimension) box culvert with 18 inches of granular backfill for structures on each side. The culvert excavation will extend 18 inches below the bottom of the culvert. If ledge or boulders are encountered within this depth, the material will be removed as required by the contract documents and the over-excavated materials will be backfilled with granular backfill for structures. Dewatering will be employed as necessary to keep water from the excavation area.

Based on the boring logs provided on Sheet 413 or 444, the soils are granular. The soils are Type C under the OSHA soils classification system and the excavation side slope is therefore a maximum of 1.5H:1V. The maximum excavation depth is approximately 14.5 feet based on the design elevations, for a horizontal dimension of 21.75 ft for each side slope. The excavation width is 19 feet at the base or 9.5 feet from the center of the culvert. Therefore, the top of slope is 21.75 ft + 9.5 ft = 31.25 ft horizontally from the center of the culvert. The top of excavation width will decrease where total excavation depth is below 14.5 ft.

The crane will be located on undisturbed, level, firm material. The center pin of the crane is specified by the crane company, Valley Crane Services, Inc., as 65 ft from the center of the culvert. Therefore, the center pin will be a minimum of 65 ft – 31.25 ft = 33.75 ft from the top of excavation with the outriggers located a minimum of 21.3 ft from the top of excavation. A cut sheet showing the outriggers' dimensions from the crane center is attached.

Erection

Culvert sections will be placed by a 64 ton crane with 109,800 lb counter weights supplied by Valley Crane Services, Inc. The crane will be set at the east end of the box. The maximum working radii will be 65 ft for the culvert sections and wing walls.

The crane capacity exceeds the requirements for the heaviest culvert sections. The heaviest box section is 39,350 lbs and the total weight with appurtenances such as jib and rigging is 45,785 lbs. The 64 ton crane has a capacity of 48,100 lb at a radius of 65 ft. Calculation sheets and the crane schematic plan by Kubricky Construction Corp are attached.

The minimum length slings are 30 ft long with a capacity of 19,600 lbs each, as shown on the attached cut sheet. Based on 16 ft between pick points on the precast units, the sling angle is 70 degrees. The capacity per sling is reduced to about 18,400 lbs based on the angle. However, with four slings, the capacity is sufficient for even the heaviest section.

<u>Attachments Provided by Kubricky Construction Corp. and Valley Crane Services, Inc.</u>

- DEMAG AC160 Dimensional Cut Sheet
- Crane Lift Worksheet
- Schematic Plan with center pin locations
- Sling Cut Sheet NARRand Schematic

Dimensions

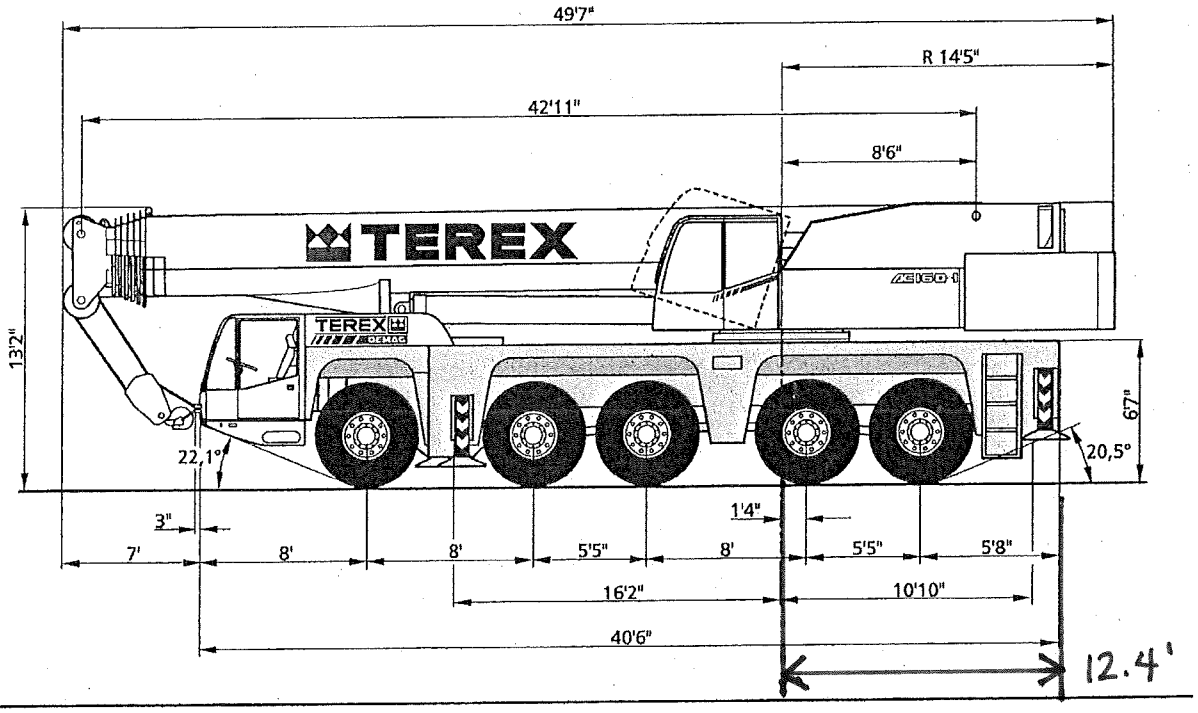
49'7"
R 14'5"
42'11"
8'6"
TEREX
13'2"
67"
22,1°
20,5°
3"
1'4"
7'
8'
8'
5'5"
8'
5'5"
5'8"
16'2"
10'10"
40'6"
12.4'

KUBRICKY CONSTRUCTION CORP

PROPOSED BRIDGE IMPROVEMENT PROJECTS
WARDSBORO BF 013-1(21) & (22)

CRANE LIFT WORKSHEET

CRANE: DEMAG AC160-1
OWNER: VALLEY CRANE SERVICES, INC.

LOAD CONFIGURATION	
AMOUNT OF EQUIPMENT WEIGHT	39,350
10% ALLOWANCE	3,935
WEIGHT OF BALL	-
WEIGHT OF BLOCK	2,000
WEIGHT OF SPREADER	-
WEIGHT OF RIGGING	500
WEIGHT OF JIB ERECTED	-
WEIGHT OF JIB STOWED	-
WEIGHT OF AUXILIARY HEAD	-
MISC. WEIGHT	-
TOTAL WEIGHT	**45,785**

CHART INFORMATION	
MAXIMUM LOAD	48,100
MAXIMUM RADIUS	65’
COUNTERWEIGHT	109,800

MAINLINE CURVE (25)
DELTA = 19°22' 15"
D = 4°46' 29"
R = 1200.00'
T = 204.80'
L = 405.70'
E = 17.35'

MAINLINE CURVE (26)
DELTA = 5°06' 37"
D = 1°58' 33"
R = 2900.00'
T = 129.41'
L = 258.65'
E = 2.89'

CHANNEL CURVE (1)
DELTA = 68°26' 44"
D =381°58' 19"
R = 15.00'
T = 10.20'
L = 17.92'
E = 3.14'

CHANNEL CURVE (2)
DELTA = 18°59' 07"
D =114°35' 30"
R = 50.00'
T = 8.36'
L = 16.57'
E = 0.69'

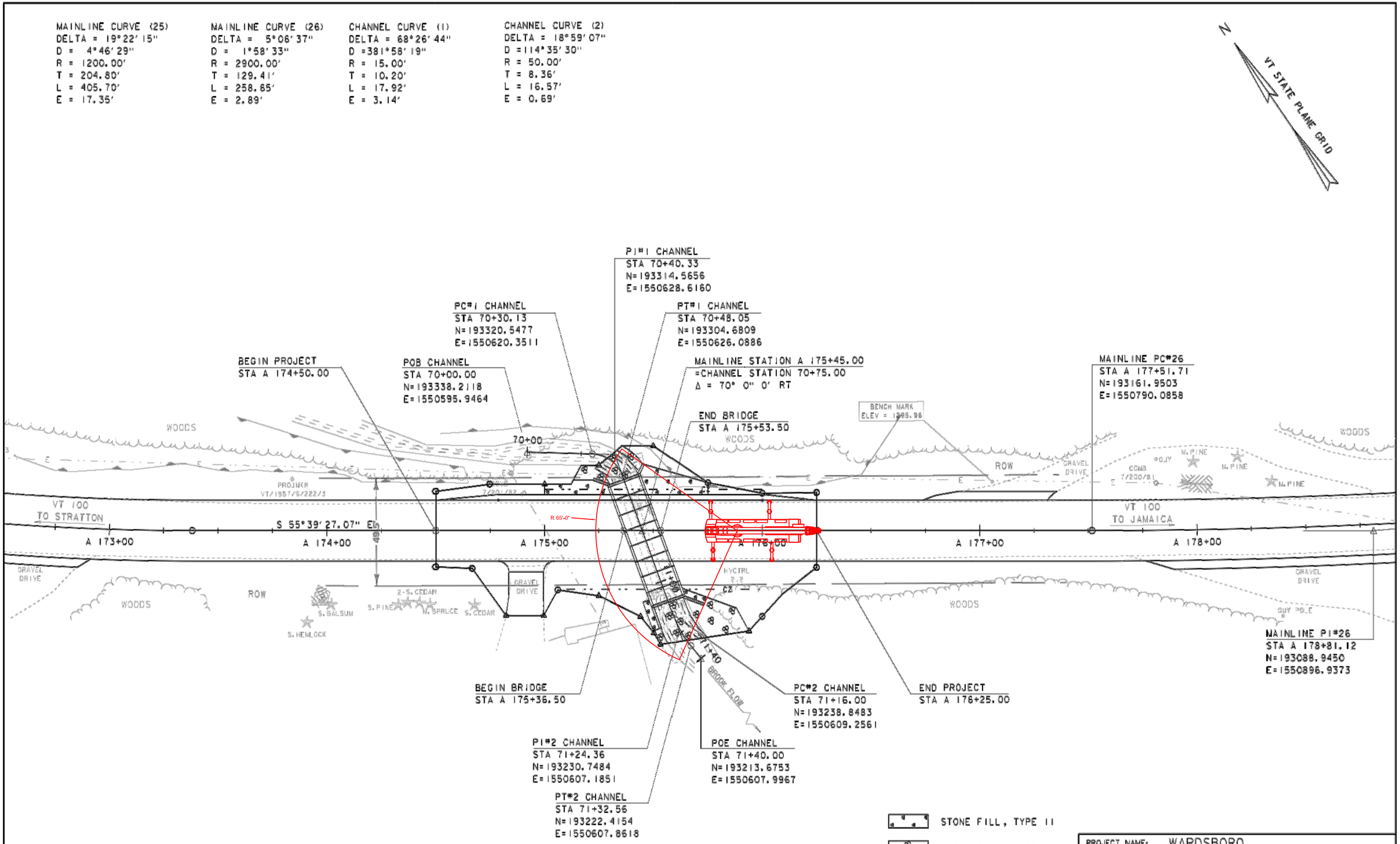

LAYOUT SHEET

SCALE 1" = 20'-0"
20 0 20

PROJECT NAME: WARDSBORO	
PROJECT NUMBER: BF 013-1(21)	
FILE NAME: s13b072bdr.dgn	PLOT DATE: 26-FEB-2014
PROJECT LEADER: K. HIGGINS	DRAWN BY: J. SALVATORI
DESIGNED BY: J. SALVATORI	CHECKED BY: G. LAROCHE
LAYOUT SHEET	SHEET 407 OF 444

PERMALOC WIRE ROPE SLINGS

Lift-All Permaloc Slings are made using the flemish splice technique to form the eyes. Unlike the simple return loop method that places 100% of its strength on the swaged sleeve, *Permaloc* slings have reserve strength should the sleeve become damaged in use.

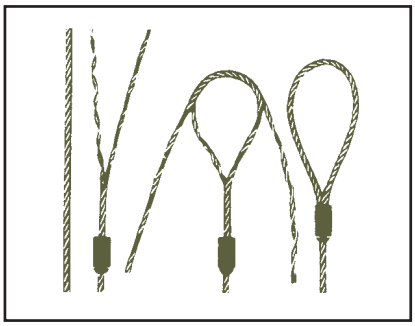

Features, Advantages and Benefits

Maintains all the basic *Lift-All* wire rope sling features plus ...

Promotes Safety

- Reserve strength - integrity of eyes not solely dependent upon steel sleeves
- IWRC resists crushing better than FC ropes

Saves Money

- When specified, thimble eyes protect wire rope from wear for increased life
- Good abrasion resistance for longer life

Permaloc With Single Part Body

Mechanically swaged, flemish eye splice wire rope slings

IWRC (Independent Wire Rope Core)

Fiber core available at reduced capacities

Wire Rope Class		Rope Dia. (in.)	EIP, IWRC [1] Rated Capacity (tons)* Vertical	Choker	V. Basket	[2] Min. Sling Length	Standard Eye Size (in.) W x L	Thimbled Eye Size (in.) W x L	Eye Hook Cap. (tons)	Crescent Thimble Eye Size (in.) W x L	Slip Thru Thimble Eye Size (in.) W x L	Sliding Choker Hook (in.)
	6 x 19 EIP, IWRC	1/4	.65	.48	1.3	1' 6"	2 x 4	7/8 x 1 5/8	1	2 x 4	2 1/8 x 4 1/8	3/8
		5/16	1.0	.74	2.0	1' 9"	2 1/2 x 5	1 1/16 x 1 7/8	1	2 x 4	2 1/2 x 4 1/8	3/8
		3/8	1.4	1.1	2.9	2' 0"	3 x 6	1 1/8 x 2 1/8	1 1/2	2 x 4	2 1/2 x 4 1/8	3/8
		7/16	1.9	1.4	3.9	2' 3"	3 1/2 x 7	1 1/4 x 2 1/4	2	2 x 5	2 3/8 x 4 3/8	1/2
		1/2	2.5	1.9	5.1	2' 6"	4 x 8	1 1/2 x 2 3/4	3	2 1/4 x 6	2 3/8 x 4 3/8	1/2 **
		9/16	3.2	2.4	6.4	2' 9"	4 1/2 x 9	1 1/2 x 2 3/4	4 1/2	2 1/4 x 7	2 3/8 x 4 3/8	5/8
		5/8	3.9	2.9	7.8	3' 0"	5 x 10	1 3/4 x 3 1/4	4 1/2	2 3/4 x 7	3 3/8 x 6 5/8	5/8 **
		3/4	5.6	4.1	11	3' 6"	6 x 12	2 x 3 3/4	7	3 1/4 x 8 1/2	3 3/8 x 6 5/8	3/4 **
		7/8	7.6	5.6	15	4' 0"	7 x 14	2 1/4 x 4 1/4	11	4 1/2 x 10	3 3/4 x 7 1/8	7/8
		1	9.8	7.2	20	4' 6"	8 x 16	2 1/2 x 4 1/2	11	4 1/2 x 11 1/2	3 3/4 x 7 1/8	1
		1 1/8	12	9.1	24	5' 0"	9 x 18	2 7/8 x 5 1/8	15	4 7/8 x 13	4 3/8 x 8 3/8	1 1/8
	6 x 37 EIP, IWRC	1 1/4	15	11	30	5' 6"	10 x 20	3 1/2 x 6 1/2	15	5 1/2 x 14 1/2	4 3/8 x 8 3/8	1 1/4
		1 3/8	18	13	36	6' 0"	11 x 22	3 1/2 x 6 1/4	22	6 x 16	5 x 9 1/2	1 3/8
		1 1/2	21	16	42	7' 0"	12 x 24	3 1/2 x 6 1/4	22	6 x 17 1/2	5 x 9 1/2	1 1/2**
		1 3/4	28	21	57	8' 0"	14 x 28	4 1/2 x 9	30	7 x 20	6 3/4 x 11 3/4	-
		2	37	28	73	9' 0"	16 x 32	6 x 12	37	7 x 23 1/2	8 x 14 1/2	-
		2 1/4	44	35	89	10' 0"	18 x 36	7 x 14	45	8 1/2 x 26	8 x 15 1/2	-
		2 1/2	54	42	109	11' 0"	20 x 40	-	-	8 1/2 x 29 1/2	-	-

Note: Larger diameter slings available. Basket ratings are based on a minimum D/d of 25. See page 74.

1. 1 Ton = 2,000 lbs.
2. Minimum sling length when using standard eyes.

Note: **Length Tolerances** - Single Part Wire Rope Slings - Standard length tolerance is plus or minus two rope diameters, or plus or minus 0.5% of the sling length, whichever is greater.

** See page 91 for reduced choker capacity when using these hook sizes.

* **WARNING** Do not exceed rated capacities. Sling capacity decreases as the angle from horizontal decreases. Slings should not be used at angles of less than 30°. Refer to Effect of Angle chart page 12.

KUBRICKY CONSTRUCTION CORP.
A MEMBER OF THE D.A. COLLINS COMPANIES

DATE AUGUST 11, 2014 JOB 20140260
BY APL SHEET 1 OF 1
DESCRIPTION SLING REDUCTION FACTOR

MINIMUM LENGTH OF SLINGS	30	FT
SLING VERTICAL CAPACITY	19,600	LB
MAX DISTANCE BETWEEN PICK POINTS	15.88	FT ⇒ ASSUME 16.00 FT

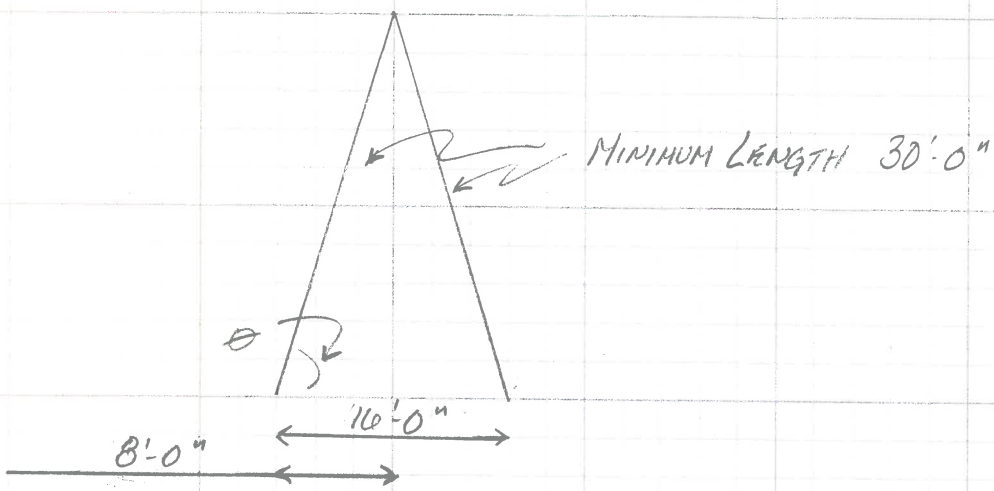

$$\cos\theta = \frac{8'\text{-}0''}{30'\text{-}0''}$$

$$\cos\theta = 0.2667$$

$$\theta = 74.53^\circ \Rightarrow \underline{\text{ASSUME } 70^\circ}$$

CAPACITY REDUCTION FACTOR ⇒ 0.9397

REDUCED SLING CAPACITY ~18,400 LB

4 SLINGS @ 18,400 LB ⇒ 73,600 LB

HEAVIEST PICK (CULVERT) ~40,000 LB ✓

2 SLINGS @ 18,400 LB ⇒ 36,800 LB

HEAVIEST PICK (WING WALL ⇒ 26,560 LB ✓