KUBRICKY CONSTRUCTION CORP.
269 BALLARD ROAD

WILTON, NY 12831
518 792-5864

KUBRICKY CONSTRUCTION CORP.
A PROUD MEMBER OF THE D.A. COLLINS™ COMPANIES
An Equal Opportunity Employer

Rutland City BRF 3000 (2014036)
SUBMITTAL 81.2

Issued 03/11/16
Respond by 03/25/16

To

Timothy Pockette, PE

Topic	BRF3000 Subm 81.2 (19) 900.645 8 Inch Watermain on Bridge R2
Status	For Approval

Message

Tim,
Please see revised submittal addressing comments from the previously returned from CHA.

Thanks,
Mike

Courtesy Copy

Volker H.D. Burkowski

From

Mike Martin

Signed by Mike C. Martin Date 3-11-16

Proceed as Indicated _____ Date _____
Owner Authorized Representative

TR FLEX® RESTRAINED JOINT PIPE

For Generations

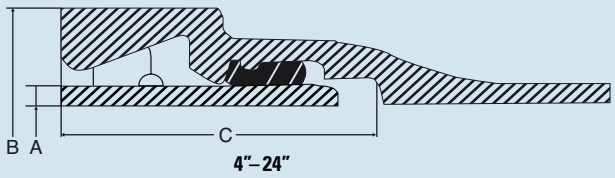

4"–24"

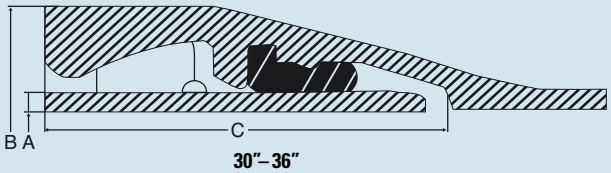

30"–36"

Pipe Size In.	*Pressure Rating psi	A	B	C	# of D.I. Locking Segments	# of Rubber Segments Retainers	Max Deflection Degrees	Pullout
		In.	PIPE In.	In.				
4	350	4.80	7.25	4.84	2	1	5	0.03
6	350	6.90	9.52	5.27	2	1	5	0.04
8	350	9.05	11.93	5.82	2	1	5	0.04
10	350	11.10	14.37	6.03	2	1	5	0.05
12	350	13.20	16.68	6.30	4	2	5	0.06
14	350	15.30	19.16	7.75	4	2	3-1/4	0.05
16	350	17.40	21.46	7.95	4	2	3-1/4	0.05
18	350	19.50	23.76	8.19	4	2	3	0.05
20	350	21.60	26.04	8.40	4	2	2-1/2	0.05
24	350	25.80	30.61	8.86	8	4	2-1/4	0.05
30	250	32.00	36.88	10.28	8	4	1-3/4	0.05
36	250	38.30	43.85	10.87	8	4	1-1/2	0.05

*The TR FLEX® Restrained Joint has a working pressure rating equivalent to the working pressure rating of the parent pipe with a maximum working pressure rating of 350 psi for 4 in. through 24 in. and 250 psi for 30 in. through 36 in.

NOTE: These deflections are based on joints with nominal dimensions.

ASSEMBLY INSTRUCTIONS

Step 1. (4"–10") Lay pipe such that one of the bell slots is accessible.
(12"–20") Lay pipe such that both of the bell slots are accessible, in the horizontal position if possible.
(24"–36") Lay pipe such that all four of the bell slots are accessible, in the diagonal position if possible.

Step 2. Clean the bell socket and insert gasket.

Step 3. Clean the spigot end to the assembly stripes.

Step 4. Lubricate the exposed surface of the gasket and pipe spigot end back to the weld bead.

Step 5. Make a normal push-on joint assembly, completely homing the pipe until the first assembly strip is in the bell socket. Keeping the joint in straight alignment during the assembly process.

Step 6. (4"–10") Insert the right-hand locking segment into a bell slot and slide the segment clockwise around the pipe.
(12"–36") Insert lower locking segment into a bell slot and slide the segment around the pipe.

Step 7. (4"–10") Insert left-hand locking segment into the bell slot and slide the segment counter-clockwise around the pipe.
(12"–36") Insert upper locking segment into the same bell slot and rotate around the pipe.

Step 8. (4"–10") Hold the segments apart and wedge the rubber retainer into the slot between the two locking segments.
(12"–36") Hold the upper segment in place and wedge the rubber retainer into the slot between the two locking segments.

Step 9. (4"–10") None.
(12"–20") Repeat steps 6–8 for other slot. Make sure that all 4 locking segments and 2 rubber retainers are securely in place.
(24"–36") Repeat steps 6–8 for other slot. Make sure that all 8 locking segments and 4 rubber retainers are securely in place.

Step 10. Extend the joint to remove the slack in the locking segment cavity. Joint extension is necessary to attain the marked laying length on the pipe and to minimize growth or extension of the line as it is pressurized.

Step 11. Set the joint deflection as required.

McWANE DUCTILE | IRON STRONG

Canada Pipe Company ULC

NEW JERSEY
183 Sitgreaves St.
Phillipsburg, NJ 08865
908-454-1161
mcwaneductile.com

OHIO
2266 S. 6th St.
Coshocton, OH 43812
740-622-6651
mcwaneductile.com

UTAH
1401 E 2000 S.
Provo, UT 84603
801-373-6910
mcwaneductile.com

CANADA
1757 Burlington St. E
Hamilton, ON L8N-3R5
905-547-3251
canadapipe.com

UL FM APPROVED NSF 61 ISO 9001 VPP DIPRA wsdo SMART certified Transparent. Quantified. Global.

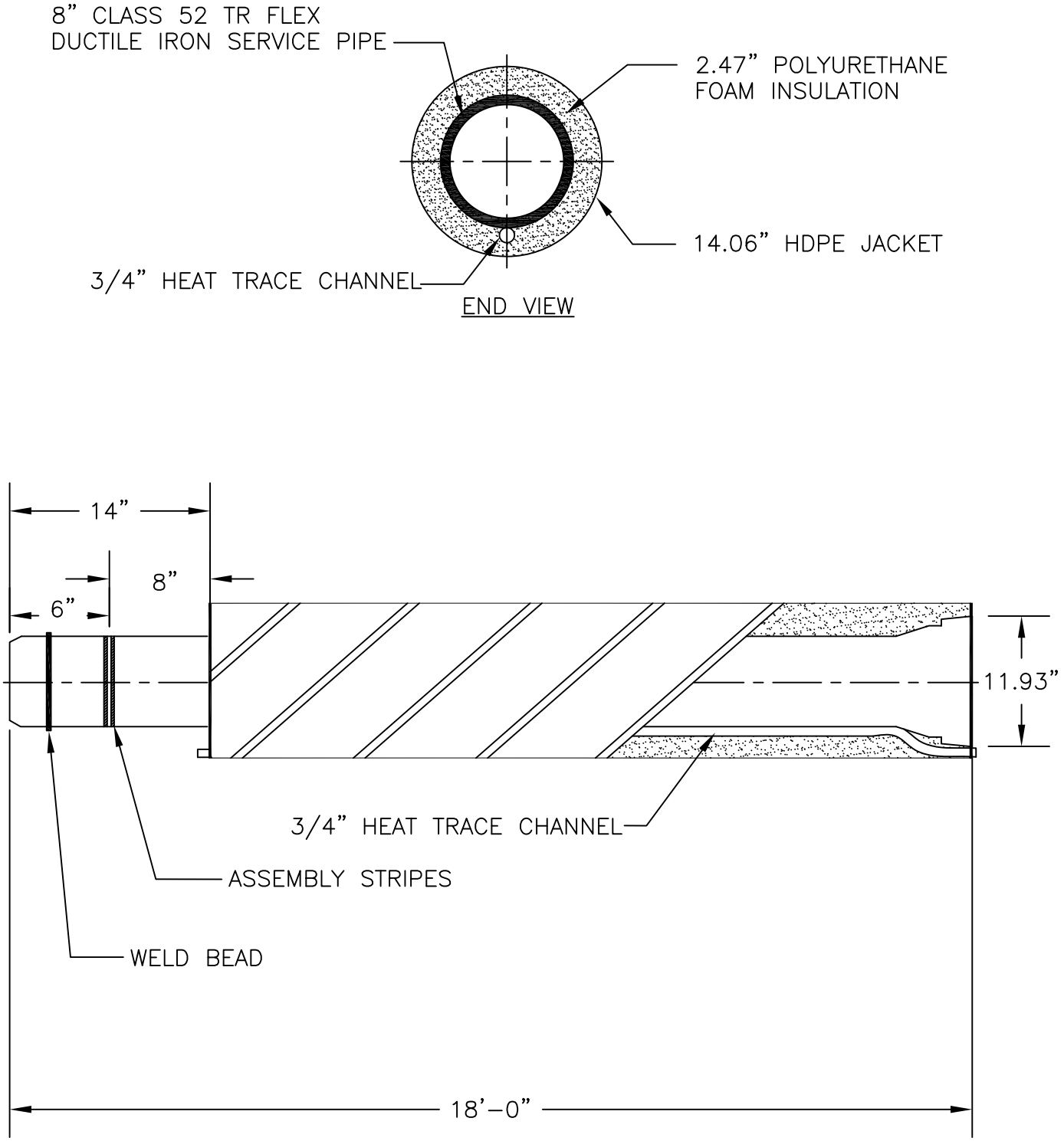

22 PCS

8" CLASS 52 TR FLEX STRAIGHT LENGTH DETAIL	Date: 11/23/16	Dwg. No.: DI-1
	Rev.: 03/11/16	

TRICON Piping Systems, Inc. ®
P.O. Box 361, Canastota, New York 13032
Tel: 315.697.8787 Fax: 315.697.8788

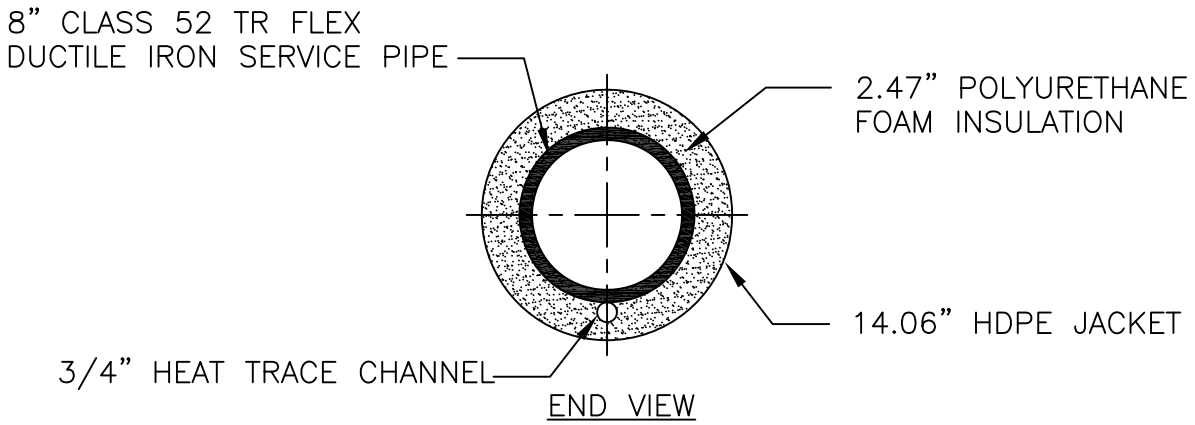

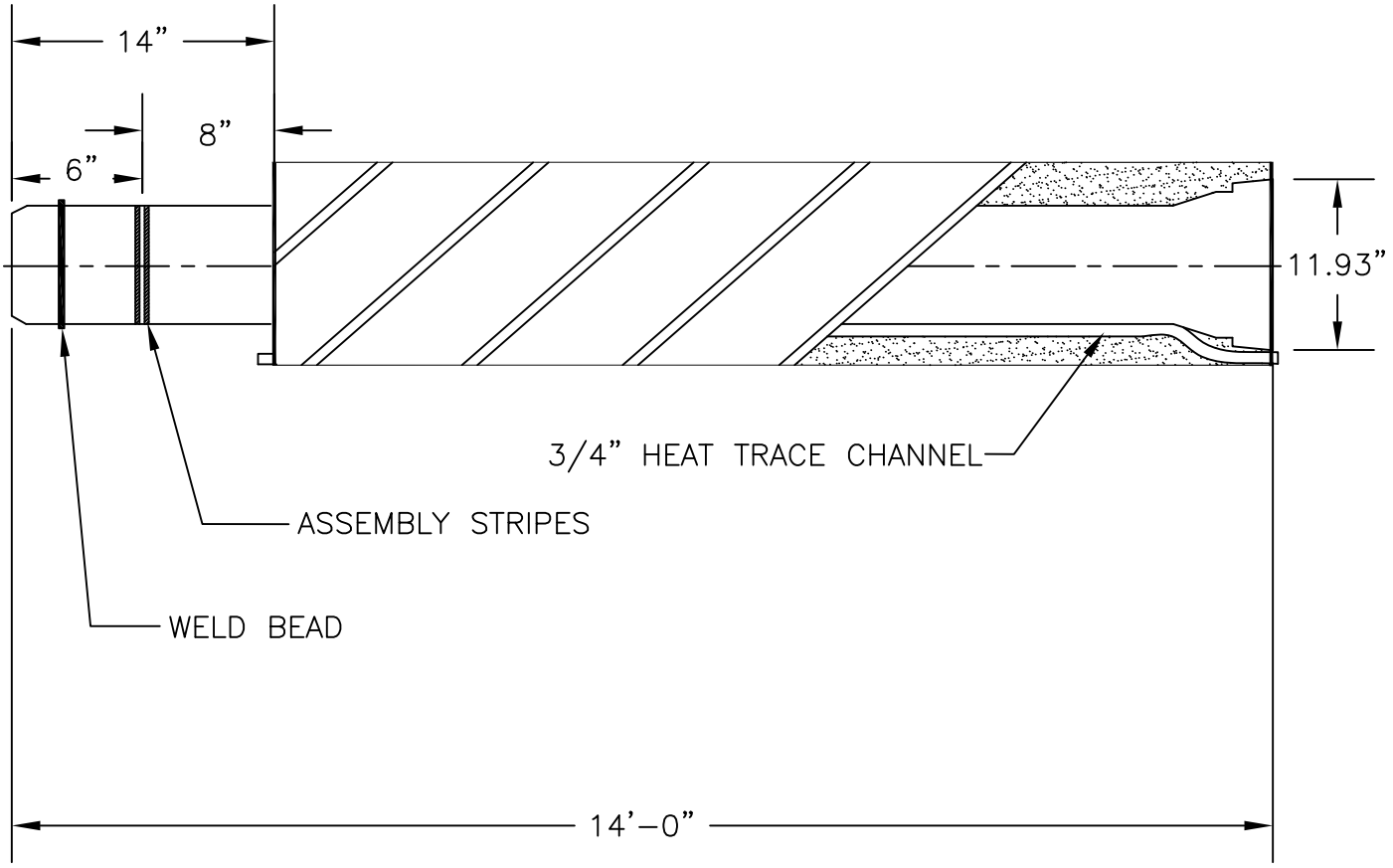

4 PCS

RIPLEY BRIDGE - RUTLAND, VT

8" CLASS 52 TR FLEX STRAIGHT LENGTH DETAIL	Date: 03/10/16	Dwg. No.: DI-2
	Rev.:	

TRICON Piping Systems, Inc.®
P.O. Box 361, Canastota, New York 13032
Tel: 315.697.8787 Fax: 315.697.8788

PHASE 1

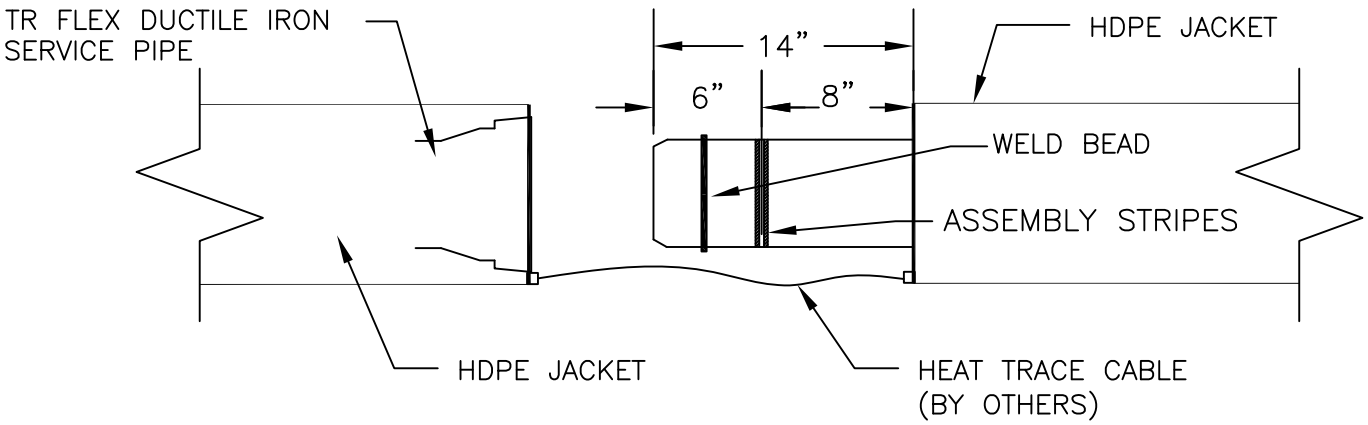

REMOVE ALL FOREIGN MATTER IN SOCKET. THE GASKET SEAT SHOULD BE THOROUGHLY INSPECTED TO BE CERTAIN IT IS CLEAN. FOREIGN MATTER IN THE GASKET SEAT MAY CAUSE A LEAK. LUBRICATE PIPE ENDS AND GASKET AS DIRECTED BY MCWANE PIPE. AFTER ALL JOINTS ARE CONNECTED, PULL HEAT TRACE CABLE FROM SPOOL AND PULL CABLE THROUGH PIPING SYSTEM

PHASE 2

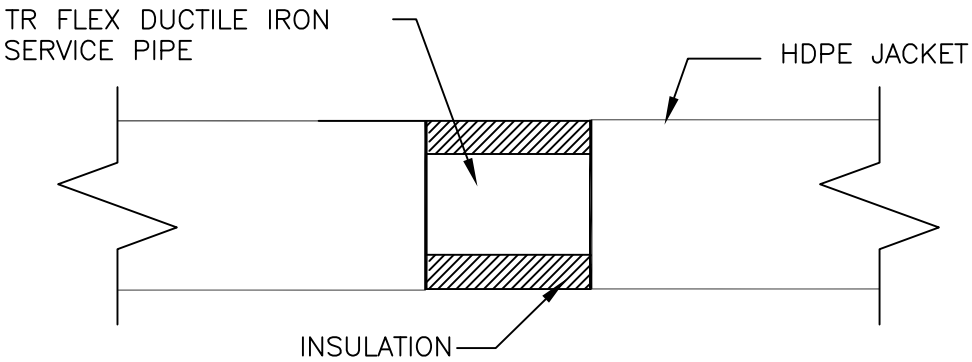

APPLY PRECUT INSULATION IN PLACE OVER JOINT. SOME TRIMMING MAY BE NECESSARY FOR A CLOSE FIT.

PHASE 3

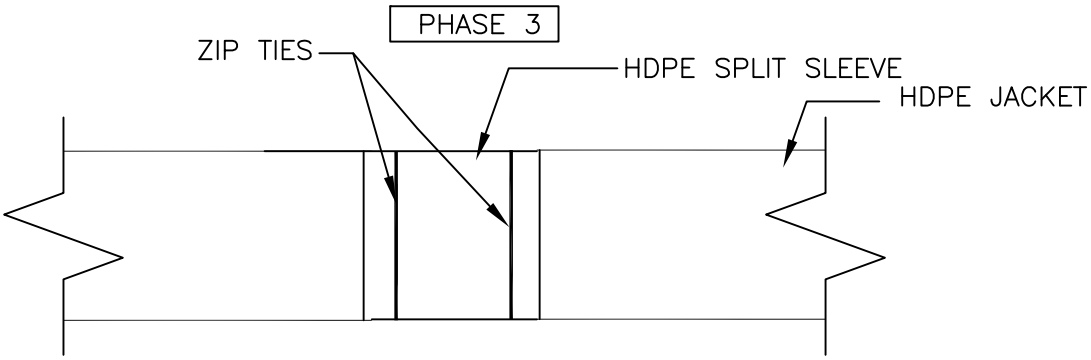

ONCE INSULATION IS IN PLACE AND SECURE, WRAP JOINT WITH AN OVERSIZED SPLIT HDPE SLEEVE AND SECURE IN PLACE WITH NYLON (ZIP TIES) STRAPPING.

RIPLEY BRIDGE - RUTLAND, VT

8" CLASS 52 TR FLEX FIELD JOINT KIT DETAIL	Date: 11/23/15	Dwg. No. DI–FJK
	Rev.: 03/11/16	

TRICON Piping Systems, Inc. ®
P.O. Box 361, Canastota, New York 13032
Tel: 315.697.8787 Fax: 315.697.8788

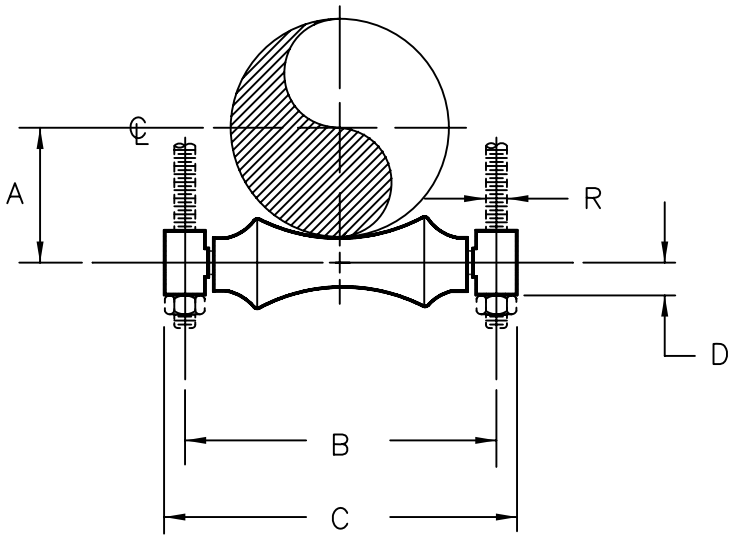

PIPE SIZE	A	B	C	D	R	MAX LOAD	UNIT WGT
1	1	3	4 1/8	5/8	3/8	600	0.45
1 1/4	1 1/4	3 3/8	4 1/2	5/8	3/8	600	0.48
1 1/2	1 3/8	3 5/8	4 3/4	5/8	3/8	600	0.51
2	1 5/8	4 1/8	5 1/4	5/8	3/8	600	0.57
2 1/2	2	5 1/2	7	7/8	1/2	600	1.50
3	2 1/4	6 1/8	7 5/8	7/8	1/2	700	1.50
3 1/2	2 1/2	6 5/8	8 1/8	7/8	1/2	700	1.70
4	2 7/8	7 1/8	8 5/8	7/8	5/8	700	1.80
5	3 1/2	8 3/8	9 7/8	7/8	5/8	700	2.40
6	4	9 5/8	11 3/8	1	5/8	1000	4.00
7	4 3/4	10 3/4	12 1/2	1	5/8	1200	6.00
8	5 1/8	12	14	1 1/8	7/8	1300	6.40
10	6 1/4	14 1/8	16	1 1/8	7/8	1700	8.50
12	7 1/2	16 1/8	18	1 1/8	7/8	2400	10.30
14	8 3/8	17 3/4	20	1 3/8	1	3100	20.90
16	9 1/2	19 7/8	22 1/8	1 3/8	1	3900	26.10
18	10 1/2	22 1/8	24 3/8	1 3/8	1	4200	36.60
20	11 5/8	24 1/8	26 5/8	1 1/2	1 1/4	4500	39.00
24	14	28 7/8	32 1/8	1 3/4	1 1/2	6100	66.90
30	17 1/2	35 1/2	39 7/8	2 1/8	1 1/2	7200	134.00

LOAD (LBS) • DIMENSIONS (INCHES) • WEIGHT (LBS)

MSS–SP–69 TYPE 41

REV	DATE	APP	DESCRIPTION
6			
5			
4			
3	03/01/07	UB	ADDED MSS-SP-69 TYPE NUMBER
2			
1			

CARPENTER AND PATERSON INC
WOBURN, MA 01801 / SADDLE BROOK, NJ 07663

SUBMITTAL DRAWING

MATERIAL: CARBON STEEL

FINISH: HOT DIP GALVANIZED

DESCRIPTION: TWO ROD ROLL HANGER

DRAWN	CHKD.	APPVD.	DATE	SCALE	SHEET
BM	RP	UB	12/93	N/A	1

DWG/FIGURE NO. 142G

REV 1

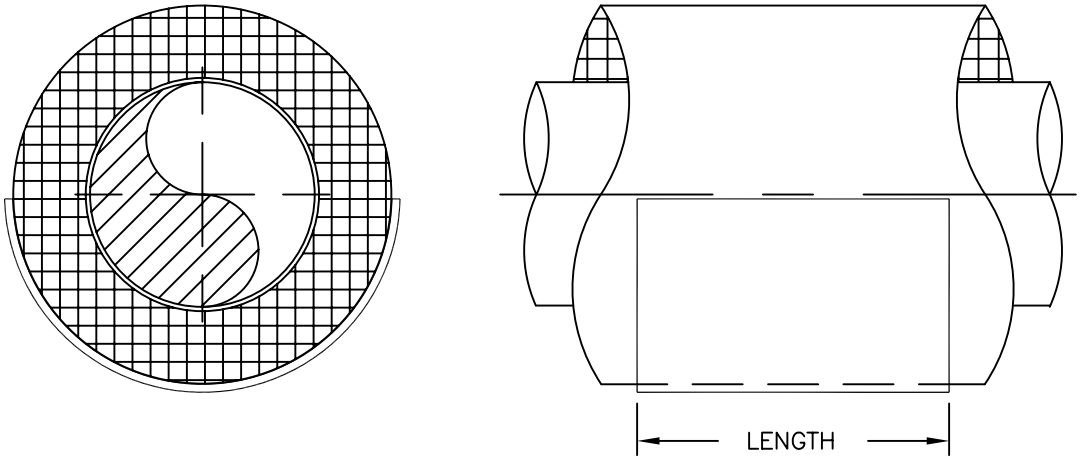

SIZE (I.D.)	HANGER SIZE	LENGTH	GA.	UNIT WGT
2.375	2	12	18	0.70
2.875	2 1/2	12	18	0.80
3.500	3	12	18	1.00
4.000	3 1/2	12	18	1.10
4.500	4	12	18	1.30
5.000	5	12	18	1.40
5.563	5	12	18	1.60
6.000	6	12	18	1.90
6.625	6	12	18	1.90
7.000	7	12	18	2.70
7.625	7	12	18	4.00
8.625	8	12	18	4.30
9.625	10	12	18	5.10
10.750	10	12	18	5.60
11.750	12	12	18	10.20
12.750	12	12	18	11.10
14.000	14	12	16	11.90
15.000	16	12	16	12.70
16.000	16	12	16	13.60
17.000	18	12	16	14.50
18.000	18	12	16	21.20
19.000	20	12	16	22.40
21.000	24	12	16	23.60

LOAD (LBS) • DIMENSIONS (INCHES) • WEIGHT (LBS)

MSS–SP–69 TYPE 40

REV	DATE	APP	DESCRIPTION
6			
5			
4			
3			
2			
1	03/14/07	UB	ADDED MSS-SP-69 TYPE NUMBER

CARPENTER AND PATERSON INC
WOBURN, MA 01801 / SADDLE BROOK, NJ 07663

SUBMITTAL DRAWING

MATERIAL: CARBON STEEL
FINISH: ELECTRO–GALVANIZED
DESCRIPTION: INSULATION SHIELD

DRAWN	CHKD.	APPVD.	DATE	SCALE	SHEET
BM	RP	UB	12/93	N/A	1

DWG/FIGURE NO. 265P
REV 1

EX-TEND®

Expansion Joint for Water and Waste Water Pipelines

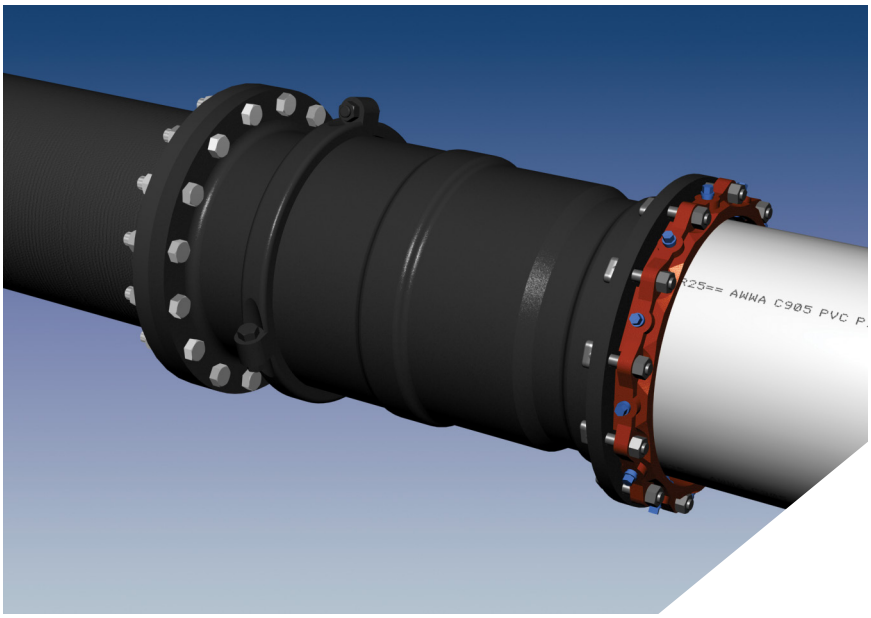

▲ *Series 216C0 EX-TEND, 16 inch combination mechanical joint by flanged expansion joint. (DIP by PVC)*
▼ *Series 216C0 EX-TEND, 16 inch combination mechanical joint by flanged expansion joint.*

Sample Specification

Expansion joints shall be installed in the locations indicated on the drawings and shall be manufactured of ductile iron conforming to the material properties of ANSI/AWWA C153/A21.53. All expansion joints shall be capable of expanding or contracting to the amounts shown on the drawings, or indicated in the specifications, but in no case shall there be less than 4" total axial movement. Separation beyond the maximum extension of the expansion joint shall be prevented without the use of external tie rods. Each expansion joint shall be pressure tested against its own restraint to a minimum of 350 psi (250 psi 24 inch and greater). MEGALUG joint restraint shall be provided with each mechanical joint connection. All internal surfaces (wetted parts) shall be lined with a minimum of 15 mils of fusion bonded epoxy conforming to the applicable requirements of ANSI/AWWA C213. Exterior surfaces shall be coated with a minimum of 6 mils of fusion bonded epoxy conforming to the applicable requirements of ANSI/AWWA C116/A21.16. Sealing gaskets shall be constructed of EPDM. The coating shall meet ANSI/NSF-61. All expansion joints shall be EX-TEND 200, as manufactured by EBAA Iron, Inc., or approved equal.

Features and Applications:

- Sizes 3 inch through 36 inch
- For Ductile Iron, Steel, PVC or HDPE pipe
- 3 inch through 20 inch rated at 350 PSI
  24 inch and greater rated at 250 PSI
- Constructed of ASTM A536 Ductile Iron
- Each unit tested to rated working pressure prior to shipment
- Self restrained at full expansion without the use of external tie bars
- Due to the design of the seals, no periodic maintenance is required
- Seals conform to the applicable requirements of ANSI/AWWA C111/A21.11
- End connections:
  Flanged Joint; 3 inch through 36 inch
  Mechanical Joint; 3 inch through 24 inch
  Combination of the two Joints available
- Flange outlets conform to the dimensional requirements of ANSI/AWWA C110/A21.10 (class 150) with the addition of an O-ring gasket which is provided to ensure a watertight seal
- Mechanical Joint end connections conform to the dimensional requirements of either ANSI/AWWA C111/A21.11 or ANSI/AWWA C153/A21.53 depending on size
- All "wetted" parts are coated with a NSF61 approved fusion bonded epoxy
- Insertion of additional sleeves for increased expansion capacity can be done at the factory or in the field as the need occurs

For use on water or wastewater pipelines subject to hydrostatic pressure and tested in accordance with either AWWA C600, C605, or ASTM D2774.

Copyright 2015 © EBAA IRON, INC.

FLEX-TEND, EX-TEND, AND FLEX-900 O-ring Groove

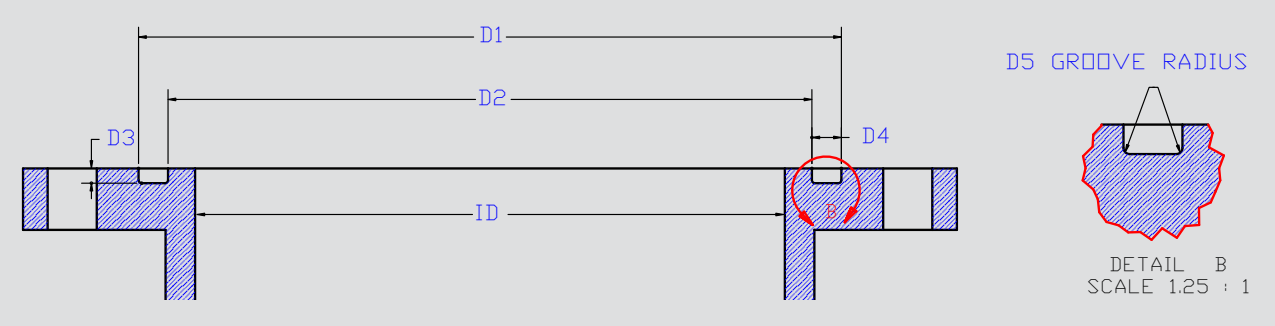

Size	D1	D2	D3	D4	D5	O-ring Diameter	O-ring Part Number
3	4.885	4.185	0.175	0.350	0.0625	0.25	983003
4	5.900	4.700	0.300	0.600	0.0625	0.5	983004
6	8.00	6.800	0.300	0.600	0.0625	0.5	983006
8	10.100	8.900	0.300	0.600	0.0625	0.5	983008
10	12.200	11.000	0.300	0.600	0.0625	0.5	983010
12	14.300	13.100	0.300	0.600	0.0625	0.5	983012
14	16.200	15.00	0.300	0.600	0.0625	0.5	983014
16	18.500	16.900	0.400	0.800	0.1250	0.625	983016
18	20.700	19.100	0.400	0.800	0.1250	0.625	983018
20	23.000	21.400	0.400	0.800	0.1250	0.625	983020
24	27.200	25.600	0.400	0.800	0.1250	0.625	983024
30	33.500	31.700	0.400	0.900	0.1250	0.75	983030
36	40.000	38.300	0.400	0.850	0.1250	0.75	983036
42	46.580	44.080	0.650	1.250	0.1250	N/A	983042
48	52.720	50.220	0.650	1.250	0.1250	1	983048

Determine your expansion requirements

Expansion Coefficient Table

Material	Coefficient inch/inch/degree F
Ductile Iron	0.0000062
PVC	0.000030
Cast Iron	0.0000058
Steel	0.0000065
HDPE	0.000080
Concrete	0.0000055

The Change in length (ΔL) due to thermal contraction/expansion is given by:

$$\Delta L = L\,(\Delta T)(C)$$

Where: L = length of pipe (inches)
ΔT = change in Temperature (degrees F)
C = coefficient of thermal expansion

Example:

1. Determine the Expansion Needed

   1000 Foot Bridge; 6 inch Ductile Iron Pipe; 120° F Total Temperature Change
   (1000)(12in/ft)(120° F)(0.0000062in/in/°F) = 8.93 in (Nearly 9 inches)

2. Select Proper Unit

   Referring to the chart on the opposite page, we will require a Series 206M2 EX-TEND because of the ability to accommodate the nine inches of expansion needed, with it's 12 inches of maximum expansion.

3. Determine the installation preset

   Factory preset for the EX-TEND is at 50% Contraction 50% Expansion setting, but the preset can be changed in the field to accommodate the present installation Temperature .

Series 200 EX-TEND® Submittal Reference Drawing

EBAA IRON

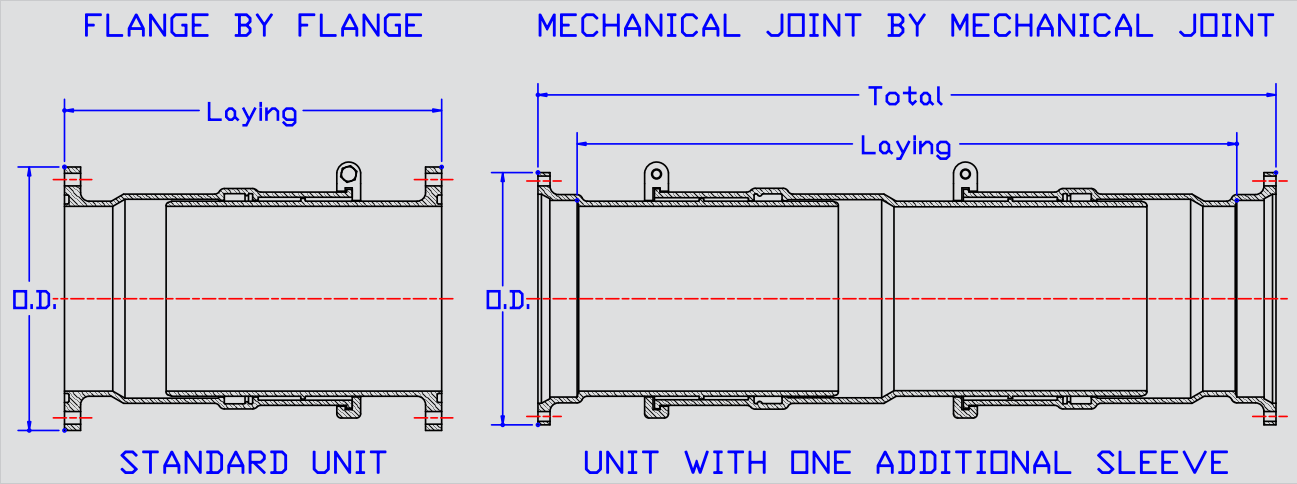

MADE IN USA

		Flange by Flange				Mechanical Joint by Mechanical Joint				
Nominal Pipe Size	Expansion (Linear)	Series Number	Maximum O.D.	Laying*	Weight (Approx)	Series Number	Maximum O.D.	Laying*	Total*	Weight (Approx)
	4	203F0	‡	‡	‡	203M0	‡	‡	‡	‡
3	8	203F1	‡	‡	‡	203M1	‡	‡	‡	‡
	12	203F2	‡	‡	‡	203M2	‡	‡	‡	‡
	4	204F0	11.0	18.2	69	204M0	11.0	15.6	20.6	74
4	8	204F1	11.0	33.5	113	204M1	11.0	30.9	35.9	118
	12	204F2	11.0	48.8	157	204M2	11.0	46.2	51.2	162
	4	206F0	12.4	19.5	95	206M0	12.4	15.4	20.4	96
6	8	206F1	12.4	33.8	160	206M1	12.4	29.7	34.7	161
	12	206F2	12.4	48.1	225	206M2	12.4	44.0	49.0	226
	4	208F0	14.8	20.7	143	208M0	14.8	16.4	21.4	139
8	8	208F1	14.8	37.8	235	208M1	14.8	33.5	38.5	231
	12	208F2	14.8	54.9	327	208M2	14.8	50.6	55.6	323
	4	210F0	17.0	21.0	196	210M0	17.0	16.5	21.5	192
10	8	210F1	17.0	36.8	333	210M1	17.0	30.5	35.5	329
	12	210F2	17.0	52.6	470	210M2	17.0	44.5	49.5	466
	4	212F0	19.3	21.5	245	212M0	19.3	19.2	24.2	244
12	8	212F1	19.3	37.5	396	212M1	19.3	35.2	40.2	395
	12	212F2	19.3	53.5	547	212M2	19.3	51.2	56.2	546
	8	214F0	22.3	32.4	389	214M0	22.3	27.0	34.0	432
14	16	214F1	22.3	58.8	677	214M1	22.3	53.3	60.0	677
	24	214F2	22.3	85.3	922	214M2	22.3	79.6	87.0	921
	8	216F0	24.5	33.9	621	216M0	24.5	31.3	38.8	621
16	16	216F1	24.5	61.8	959	216M1	24.5	59.2	66.2	959
	24	216F2	24.5	89.7	1297	216M2	24.5	87.1	94.1	1297
	8	218F0	27.1	33.7	661	218M0	27.1	27.6	34.6	652
18	16	218F1	27.1	60.8	1041	218M1	27.1	54.7	61.7	1032
	24	218F2	27.1	87.9	1421	218M2	27.1	81.8	88.8	1412
	8	220F0	27.5	32.7	701	220M0	27.5	27.5	34.5	683
20	16	220F1	27.5	60.0	1123	220M1	27.5	54.8	61.8	1105
	24	220F2	27.5	87.3	1545	220M2	27.5	82.1	89.1	1527
	8	224F0	34.9	33.5	908	224M0	34.9	29.0	36.0	882
24	16	224F1	34.9	60.8	1610	224M1	34.9	56.3	63.3	1584
	24	224F2	34.9	88.1	2312	224M2	34.9	83.6	90.6	2286
		230F0	‡	‡	‡	~	~	~	~	~
30	10	230F1	‡	‡	‡	~	~	~	~	~
		230F2	‡	‡	‡	~	~	~	~	~
36	10	236F0	49.2	46.8	2347	~	~	~	~	~

NOTE: Dimensions are in inches ± 1% and are subject to change without notice. Contact EBAA for availability of sizes not shown or listed.
* Laying Lengths and Total Lengths reflect unit set at midpoint of expansion capacity.
‡ Contact EBAA for sizes not listed.

Installation Instructions for EX-TEND® 200

1. Remove protective end covers.
2. Remove polyethylene sleeve and other material.
3. Check interior, remove dirt and foreign material from interior and end connections.
4. For buried applications install polyethylene sleeve per ANSI/AWWA C105/A21.5 recommendations.
5. Assembly of flange joint:
   a. Place flange o-ring in groove.
   b. Place EX-TEND flange against adjoining flange, install and hand tighten bolts.
   c. Tighten flange bolts.
6. Install mechanical joint EX-TEND end connections using the EBAA IRON MEGALUG® Joint Restraint suitable for adjacent pipe material.

   MEGALUG 1100 should be used on ductile iron pipe.

   MEGALUG 2000PV should be used on AWWA PVC pipe.

   Assembly instructions for each of these products are included with restraint device.
7. Assembly of restrained plain end:
   a. Lubricate and install EBAA-Seal® gasket provided over plain end per ANSI/AWWA C600.
   b. Insert plain end into adjacent mechanical joint bell.
   c. Install and hand tighten t-bolts.
   d. Tighten t-bolts per AWWA recommendations.
8. Remove shipping skid.
9. Touch up exterior coating as necessary. Use coal tar epoxy following

Important Notes

Due to hydrostatic forces that cause the EX-TEND 200 to expand, some applications may require blocking to isolate the areas of anticipated movement and to prevent this expansion from affecting adjacent piping.

The flanged outlets have dimensions according to ANSI/AWWA C110/A21.10 with each flange to ensure a proven water tight seal to a maximum of 350 PSI pressure.

Mechanical joint connections conform to the dimensional requirements of either ANSI/AWWA C110/A21.10 or ANSI/AWWA C153/A21.53 depending on the size.

EBAA IRON Sales, Inc.

P.O. Box 857, Eastland, TX 76448

Tel: (254) 629-1731

Fax: (254) 629-8931

(800) 433-1716 within US and Canada

contact@ebaa.com

www.ebaa.com

Members of...

AMERICAN FOUNDRY SOCIETY

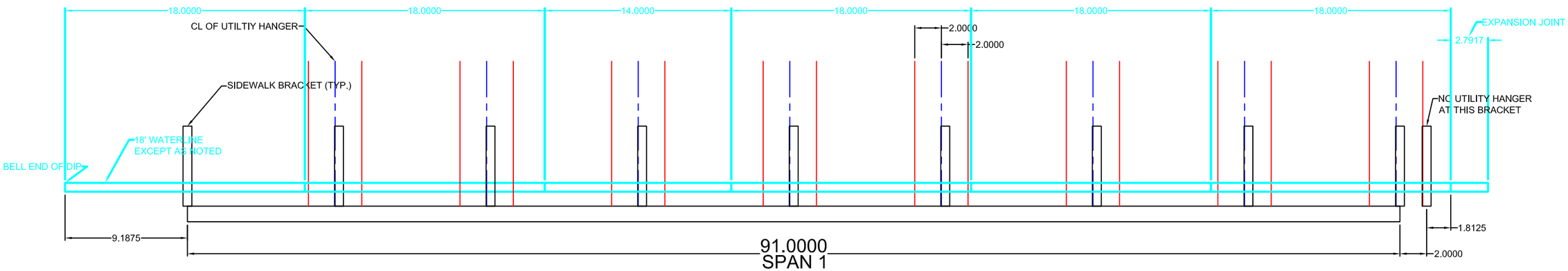

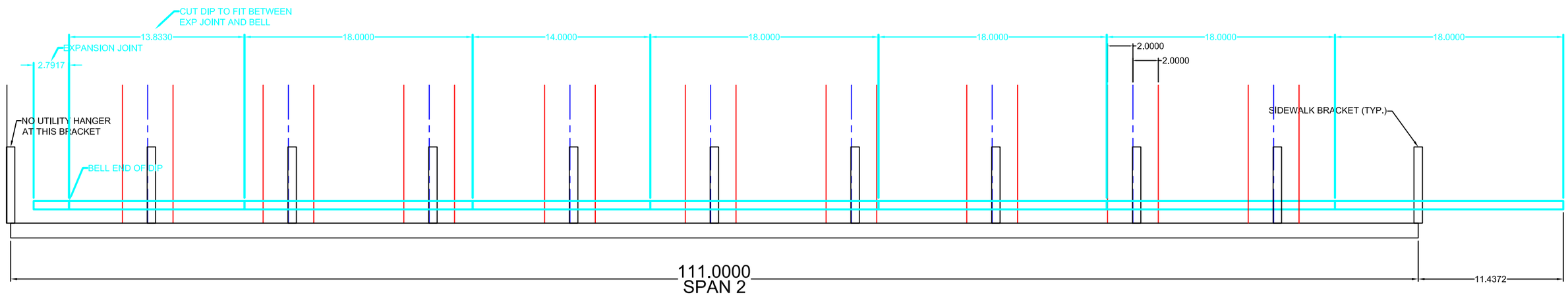

RIPLEY ROAD TRUSS 8 INCH WATERLINE LAYOUT

8 INCH SEWER SIMILAR

KUBRICKY CONSTRUCTION CORP.

REVISIONS			KUBRICKY CONSTRUCTION		
NO.	DATE	BY	CONTRACT No.		
1			RIPLEY ROAD 8 INCH UTILITY LAYOUT		
2					
3					
4			DESIGNED RMP	SHEET SIZE 11" x 17"	DRAWING NO.
5			CHK'D MCM	DATE 10MAR16	UL-01