KUBRICKY CONSTRUCTION CORP.
269 BALLARD ROAD

WILTON, NY 12831
518 792-5864

KUBRICKY CONSTRUCTION CORP.
A PROUD MEMBER OF THE D.A. COLLINS™ COMPANIES
An Equal Opportunity Employer

Rutland City BRF 3000 (2014036)
SUBMITTAL 81

Issued 01/06/16
Respond by 01/20/16

To

Timothy Pockette, PE

Topic	900.645 Water Main on Bridge 8"
Status	For Approval
Spec section	900.645
Responsibility	(19) Ripley Road
Sent to approver	1/6/16
Required from approver	1/20/16

Message

Submittal includes:
8" DI Pipe
Pipe Insulation
Two rod roll hanger (two at each location IAW truss design)
Insulation Shield
Ex-Tend Expansion Joint

From

Volker H.D. Burkowski

Signed by _____ Date 1/6/16

Proceed as Indicated _____ Date _____
Owner Authorized Representative

P.O. Box 2727
Birmingham, AL 35202-2727
Telephone: 1-800-442-2347
Fax: 1-800-442-2348
E-mail: adipcs@american-usa.com
WWW.AMERICAN-USA.COM

AMERICAN
DUCTILE IRON PIPE
THE RIGHT WAY

AMERICAN Ductile Iron Pipe Product Submittal Package

Cover Page Information

Generated By: Andrew Cowan
Email: andrew.cowan@ferguson.com
Telephone: 518-877-3086
Project Name: Ripley Road Bridge
Project Location: Rutland VT

This is to certify materials furnished on this project by AMERICAN will comply with the ANSI/AWWA Standards listed below. Some components and other materials, including but not limited to various fittings, flanges, gaskets, fasteners, and bolts/nuts may be globally sourced and not of domestic manufacture. ANSI/AWWA Standards are the latest revisions as of this date.

Products Submitted in this Package Include:

1. Certificate of Compliance (pg.1)
2. Flex-Ring Joint Pipe (pg.2)

AMERICAN manufactured Flex-Ring Restraint

American Cast Iron Pipe Company
Quality Assurance
PO Box 2727
Birmingham, Al 35202-2727
(205) 325-7976

AMERICAN
THE RIGHT WAY

Certificate of Compliance

Date: October 3, 2014

To whom it may concern,

This is to certify the pipe produced at this facility are manufactured (cast, lined, coated), tested, inspected and approved in accordance with all applicable ANSI/AWWA standards prior to shipment.

Ronald Hayes

Ronald Hayes, P.E.
Manager of Quality Assurance

AMERICAN Ductile Iron Flex-Ring® Joint Pipe

Centrifugally Cast for Water, Sewage, or Other Liquids

4"-12" Flex-Ring® Joint

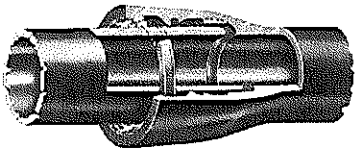

14"-54" Flex-Ring® Joint

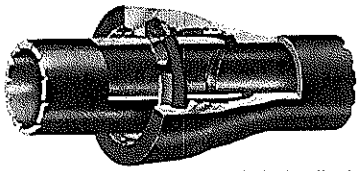

AMERICAN Flex-Ring® Restrained Joint Ductile Iron pipe, utilizing the sealing features of the time-proven Fastite® Joint and a boltless restrained connection, provides flexible, easily assembled, positive restraint against endwise separation due to thrust.

The patented[1] Flex-Ring Joint is designed for a working pressure[2] equal to that of the pipe or up to 350 psi in sizes 4"-24" and up to 250 psi in sizes 30" and 48". The joint has been thoroughly factory tested to withstand dead-end thrust resulting from more than twice those working pressures.

Flex-Ring® joint pipe with its positive, flexible joint restraint may also be used in trenchless applications such as **horizontal directional drilling** and pipe bursting. With spigot ahead, the low-profile Flex-Ring® bell assembles quickly and offers a smooth transition during pipe pull-back. AMERICAN offers a Flex-Ring® pulling bell assembly specifically designed for this installation method.

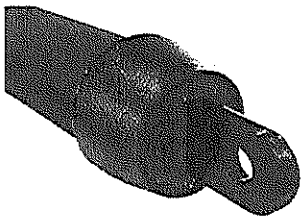

Pulling Bell Assembly

For 4"-12" sizes, a beveled ductile iron, welded-on retainer ring and a yellow painted ductile iron split flex-ring, assembled behind the retainer ring, provide the means of restraint. After the plain end of the pipe is assembled into the Flex-Ring bell, the split flex-ring is inserted and springs into the socket locking groove. The flex-ring is securely positioned behind the welded-on retainer ring and in the socket locking groove on the inside of the pipe bell. This provides the flexible restraint.

For 14"-54" sizes, a shop-applied weld bead and a rubber-backed ring, containing yellow painted ductile iron segments, provide the means of restraint. As the plain end of the pipe is fully assembled into the bell, the ductile iron segments automatically close on the pipe behind the weld bead. The enclosure of the segments between the weld bead, spigot, and the sloped inner lip of the bell provides the flexible restraint.

The Flex-Ring Joint can be safely deflected after assembly to the limits shown in Table Nos. 9-1 and 9-2. This liberal deflection facilitates installation, decreases the number of necessary fittings, and accommodates settlement.

The Flex-Ring Joint is Underwriters Laboratories listed and Factory Mutual approved in sizes 4"-12". This UL listing and FM approval applies to all pressure classes and special thickness classes of ductile iron pipe. The only joint components needed to assemble the Flex-Ring Joint are a gasket and a single ring.

1 U.S. Patent Nos. 4,643,466, 4,685,708, and 5,197,768
2 If higher working pressures are required, check AMERICAN.

AMERICAN Ductile Iron Flex-Ring® Joint Pipe

Centrifugally Cast for Water, Sewage, or Other Liquids

No loose lugs, heavy wedges, rubber tubes, etc. are necessary. Also, there is no need to orient bells to ensure proper installation, though for convenience, most installers orient the split locking ring ends in 4"-12" sizes away from the very bottom of the joints. Just follow the simple instructions shown on the following pages, and positive restraint is ensured.

Flex-Rings, Flex-Ring segments, and retainer rings are manufactured of ductile iron compatible with pipe. Welds and weld beads (if used) are nickel-iron, proven desirably cathodic to the ductile iron pipe, and welding is performed using welders qualified to produce high-quality, dependable welds.

Fittings for use with 16"- 48" Flex-Ring pipe are ductile iron and meet or exceed the applicable performance and manufacturing requirements of ANSI /AWWA C110/A21.10 or ANSI/AWWA C153/A21.53. These are rated for the same working pressures shown for like fittings in C110 and C153. Fittings in these sizes are also available in both bell-bell and bell-Flex-Ring spigot configurations for installation versatility and economy.

AMERICAN Flex-Ring® pipe and fittings are normally furnished with standard asphaltic coating outside and cement lined in accordance with ANSI/AWWA C104/A21.4. Special coatings and linings can be furnished when specified.

Field closures or other restraint can normally be securely made by using AMERICAN's Fast-Grip® gasket, which is available in 4"-30" sizes. (See page 9-2 for details of the Fast-Grip gasket.)The Fast-Grip® gasket restraint closure is UL listed and FM approved for use in Flex-Ring and Fastite bells in 4"-16" sizes. Field closures or other restraint in 14"-36" sizes can also be made in Flex-Ring bells only by using AMERICAN's Field Flex-Ring®. (See page 9-16.)

AMERICAN Ductile Iron Flex-Ring® Joint Pipe

Standard Dimensions and Pressure Ratings

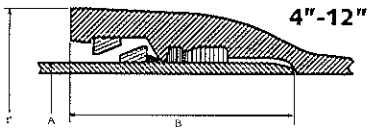

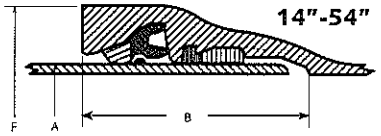

Table No. 9-1 **4"-12"**

Size in.	Working Pressure* psi	Nominal Laying Length** ft.	A O.D. in.	B Socket Depth in.	F Bell O.D.† in.	Allowable Pulling Load lb.††	Allowable Deflection degree	Offset per 20' Length in.	Radius of Curve^ ft.	Empty Pipe Buoyancy in Water (lb/ft)^^
4	350	20	4.80	5.62	7.06	10,000	5	21	230	-5
6	350	20	6.90	5.62	9.19	20,000	5	21	230	-2
8	350	20	9.05	5.74	11.33	30,000	5	21	230	3
10	350	20	11.10	6.72	13.56	45,000	5	21	230	11
12	350	20	13.20	6.72	15.74	60,000	5	21	230	19

* Working pressure is the maximum pressure rating of the joint and is based on its capability to resist thrust due to internal pressure. If higher working pressure is required, check AMERICAN.

** Laying length is nominal 20'. Where exact lengths are required, contact AMERICAN. Minimum laying lengths for Flex-Ring & Flex-Ring End pipe is 1'-0" and for Flex-Ring End & Flex-Ring End pipe is 2'-0".

† Dimensions subject to change at our option. Check AMERICAN if smaller or exact dimensions are required.

†† Intended for Horizontal Directional Drilling (HDD) applications. Flex-Ring pipe may be available for greater pulling loads than indicated in the tabulated values. **Contact AMERICAN when higher pulling loads are required.**

^ Approximate radius of curve produced by a succession of 20' lengths of pipe fully deflected.

^^ Based on weight of empty (full of air) Pressure Class 350 Flex-Ring pipe with standard cement lining immersed in water. Positive numbers indicate such pipe will float.

Table No. 9-2 **14"-54"**

Size in.	Working Pressure* psi	Nominal Laying Length** ft.	A O.D. in.	B Socket Depth in.	F Bell O.D.† in.	Allowable Pulling Load lb.††	Allowable Deflection degree	Offset per 20' Length in.	Radius of Curve^ ft.	Empty Pipe Buoyancy in Water (lb/ft)^^
14	350	20	15.30	7.38	19.31	75,000	4	17	285	27
16	350	20	17.40	7.38	21.43	95,000	3 3/4	16	305	38
18	350	20	19.50	8.20	23.70	120,000	3 3/4	16	305	52
20	350	20	21.60	8.20	25.82	150,000	3 1/2	15	327	69
24	350	20	25.80	8.96	29.88	210,000	3	12	380	104
30	250	20	32.00	9.63	36.34	220,000	2 1/2	10	458	175
36	250	20	38.30	9.63	42.86	310,000	2	8	570	266
42	250	20	44.50	10.84	49.92	390,000	2	8	570	359
48	250	20	50.80	12.37	56.36	500,000	2	8	570	484
54	250	20	57.56	12.74	63.90	650,000	2	8	570	632

* Working pressure is the maximum pressure rating of the joint and is based on its capability to resist thrust due to internal pressure. If higher working pressure is required, check AMERICAN. Pressure rating of the joint is limited by the pressure rating of the parent pipe.

** Laying length is nominal 20'. Where exact lengths are required, contact AMERICAN. See below for minimum laying lengths for 14"-48" Flex-Ring.

† Dimensions subject to change at our option. Check AMERICAN if smaller or exact dimensions are required.

†† Intended for Horizontal Directional Drilling (HDD) applications. The tabulated values are based on Pressure Class 350 pipe thickness. **Contact AMERICAN when it may be desirable to use lesser pressure class pipe or when higher pulling loads are required.** Flex-Ring pipe may be available for greater pulling loads than indicated in the tabulated values.

^ Approximate radius of curve produced by a succession of 20' lengths of pipe fully deflected.

^^ Based on weight of empty (full of air) Pressure Class 350 Flex-Ring pipe with standard cement lining immersed in water. Positive numbers indicate such pipe will float.

Minimum Laying Lengths

Size in.	Flex-Ring & Flex-Ring End	Flex-Ring End & Flex-Ring End
14	1'-6"	2'-0"
16	1'-6"	2'-0"
18	1'-6"	2'-0"
20	1'-6"	2'-0"
24	2'-0"	2'-6"
30	2'-0"	2'-6"
36	2'-0"	2'-6"
42	2'-0"	3'-0"
48	2'-6"	3'-0"
54	3'-0"	3'-6"

AMERICAN Ductile Iron Flex-Ring® Joint Pipe

Assembly Instructions

4"-12"

1

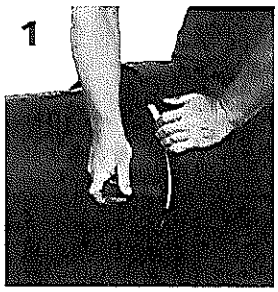

2

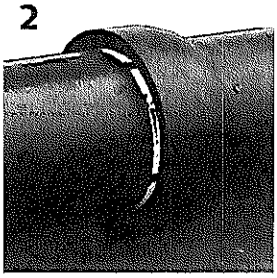

Prior to joint assembly, remove the packing material holding the split flex-ring onto the pipe. (See "Field Assembly of Flex-Ring" if split flex-ring is shipped separately.) Thoroughly clean the socket locking groove as well as the Fastite gasket recess and pipe plain end. In accordance with standard Fastite joint assembly instructions, insert the gasket and lubricate the pipe plain end, bevel, and inside surface of the gasket. With the pipe in essentially straight alignment, assemble the plain end into the Flex-Ring socket until the spigot stripe disappears into the bell. The orientation of the spigot stripe relative to the bell face is an indication of pipe alignment.

1. Tap the flex-ring into the socket beginning with one end of the flex-ring and progressing around the joint as shown in Photo 1. This operation is made easier by holding one end of the flex-ring inside the bell as the remainder of the ring is caulked into the socket. Correct seating is generally ensured by a snapping noise as the flex-ring springs into position. This should be accompanied by visual or tactile inspection (the flex-ring is painted yellow to aid in this inspection). (Note: When a visual inspection to determine the flex-ring position is not practical, such as in an underwater installation, a feeler gauge can be used to ensure the correct positioning of the flex-ring in the socket locking groove. It may be necessary to move the entering pipe slightly to improve alignment if the ring does not readily spring into the socket locking groove.)

2. The completed joint.

This bridge crossing illustrates design/construction advantages, including the deflection capabilities of AMERICAN Flex-Ring Joint Pipe.

AMERICAN Ductile Iron Flex-Ring® Joint Pipe

Assembly Instructions
4"-12"

FIELD ASSEMBLY OF FLEX-RING

If the split flex-ring is shipped separately, assemble it onto the pipe spigot by spreading the Flex-Ring ends as shown above. Be sure that the flex-ring is oriented so that the small end is toward the pipe plain end.

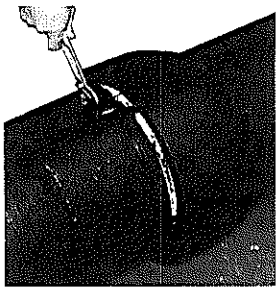

DISASSEMBLY OF 4"-12" FLEX-RING

If disassembly of the joint is required, it may be accomplished by inserting pins or nails into the drilled holes furnished in the flex-ring ends and compressing the flex-ring firmly onto the pipe as shown above. If desired, steel pins can be field welded onto the ends of common adjustable pliers, if such a disassembly tool is more desirable to the user. If axial movement or joint extension has occurred in the joint prior to disassembly, it may be necessary to move the spigot completely to the rear of the socket in straight alignment to allow the Flex-Ring to be compressed for removal.

THE FOLLOWING INFORMATION PERTAINS TO 4"-54" JOINTS:

NOTE: The AMERICAN Flex-Ring Joint allows for joint take-up and flexibility after installation. In most underground installations, including most restrained bend locations, this feature is advantageous in that increased thrust-resisting soil forces are generated. Also, expansion and contraction due to temperature variations may be accommodated without excessive stress in the pipe members.

In any application where axial or lateral movement may be undesirable, such as certain bridge crossings, certain exposed or unburied piping applications, or certain connections of restrained pipe sections to rigid piping, special provisions, including effective joint extension, may be necessary to control unacceptable pipeline movement. (See also Section 7, Pipe-On-Supports, etc.)

Depending on job conditions and restrained pipe length, cumulative joint take-up can be substantial, particularly in exposed or unburied piping applications. In this regard, joints may be extended after assembly to minimize further joint take-up in test or service. This will not prevent proper joint deflection.

The amount of joint take-up or line movement in buried restrained pipelines is substantially limited by the surrounding soil. Therefore, system security and safety is maximized by filling and testing restrained sections of pipelines after backfilling as recommended by ANSI/AWWA C600, Installation of Ductile Iron Water Mains and Their Appurtenances and AWWA M41.

AMERICAN Ductile Iron Flex-Ring® Joint Pipe

Assembly Instructions

14"-54"

1) Cleaning and Fastite gasket insertion

Thoroughly clean the socket restraining groove (nearest the bell end), the Fastite gasket recess, and the pipe plain end, removing dirt, sand, ice, mud, or any other material which could prevent the proper placement of the Fastite gasket and flex-ring. As in normal Fastite joint assembly, insert the gasket into the gasket socket groove

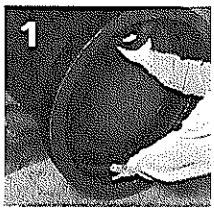

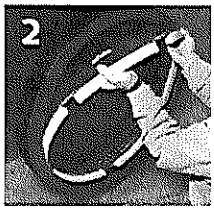

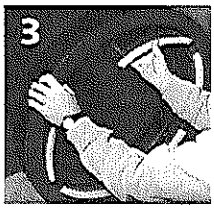

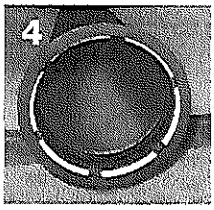

(1). Important: A Fastite gasket must also be used, because the rubberbacked flex-ring does not perform any sealing function.

2) Placement of the the flex-ring in socket and joint lubrication

Remove the flex-ring from its container and place it in the socket restraining groove in gasket-like fashion (Photo 2). **The yellow** restraining segments of the flex-ring must be oriented toward the entering spigot. This may be done by first placing the flex-ring in the socket groove by forming one or more inward or lateral loops in the rubber backed ring (Photo 3). Work all inward or lateral loops fully outward and planar such that each metal segment fits reasonably flush against the wedging surface of the socket, and no rubber bulges or twists remain (Photo 4).

Lubricate the inside surface of the gasket and the first four inches of the spigot including the beveled nose end of the pipe. Do not allow the lubricated spigot end of the pipe to contact the ground prior to insertion.

3) Initial placement of Flex-Ring spigot end into socket

With the spigot in reasonably straight alignment and centered within the flex-ring (Photo 5),

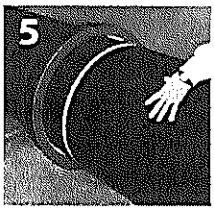

insert the spigot until it contacts the back of the socket per normal Fastite joint assembly procedure. (See Section 2 for additional detail on Fastite assembly procedures.) When the weld bead is in proper assembled position fully beyond the yellow Flex-Ring segments, every segment will be trapped firmly between the weld bead, the spigot, and the wedging surface of the socket.

Verify the correct positioning of the yellow Flex-Ring segments by visual inspection (or by "feeler" gauge if installed in conditions of poor visibility).

The segments will normally snap directly into the correct assembled position. However, if any segment should not come down firmly onto the pipe at any location, deflect the pipe slightly in that direction, thereby allowing the segment to seat itself correctly.

After joint assembly, the joint may be extended and then deflected within the range of allowable joint deflection for the size of pipe being assembled.

4) Assembly of fittings

Flex-Ring pipe and fitting joints can generally be assembled with the same tools and methods used for many years with Fastite joints. When using a field-cut pipe to locate a fitting, it may be advantageous to use an uncut flex-ring spigot end (with factory weld bead) and a standard Flex-Ring in the fitting socket rather than using a field-cut plain end and Field Flex-Ring with

AMERICAN Ductile Iron Flex-Ring® Joint Pipe
Assembly Instructions
14"-54"

black-toothed gripping segments. A Field Flex-Ring and cut pipe plain end may then be used in the nearest pipe socket on either side of the fitting. When possible, the use of standard flex-ring with yellow segments and factory spigots with weld beads in the sockets of a fitting may allow easier orientation or rotation of the fitting relative to the pipe after assembly, if this is needed. (See Section 4 for additional detail on the assembly of Fastite fittings.)

5) Joint extension after installation

The 14"- 54" Flex-Ring locking mechanism allows approximately one inch of free axial movement and also provides substantial flexibility after installation. However, the joints may be extended after assembly to minimize this joint takeup in test or service conditions.

In most underground installations (including most restrained bend locations), joint take-up is advantageous in that increased thrust-resisting forces are generated. Also, expansion and contraction due to temperature variations may be accommodated without excessive stress in pipe members. The amount of joint take-up or line movement in buried restrained pipelines is substantially limited by the surrounding soil. Therefore, system security and safety is maximized by filling and testing restrained sections of pipelines **after** backfilling as recommended by ANSI/AWWA C600, Installation of Ductile Iron Water Mains and Their Appurtenances and AWWA M41.

In any application where axial or lateral movement may be undesirable, such as certain bridge crossings, certain exposed or unburied piping applications, or certain connections of restrained pipe sections to rigid piping, special provisions, including effective joint extension, may be necessary to control unacceptable pipeline movement.

Depending on job conditions and restrained pipe length, cumulative joint take-up can obviously be substantial, particularly in exposed piping applications. Where joint pre-extension is necessary in a piping system, it may be accomplished by pulling or jacking the spigot away from the socket until firm resistance is encountered. This will not limit joint flexibility. See "Restrained Joint Pipe Assembly Extension Procedure" in this section of the Pipe Manual for more information concerning joint extension.

The versatile performance capabilities of AMERICAN Flex-Ring Joint Pipe are perfectly suited for projects containing a variety of conditions such as the hilly, rocky terrain shown in this photo.

AMERICAN Ductile Iron Flex-Ring® Joint Pipe

Disassembly Instructions for 14"-54" Flex-Ring Joints

Flex-Ring joints may be disassembled if required using sharp wedges and 3/16"-1/4" thick disassembly shims. Flex-Ring disassembly sets are available from AMERICAN and are suggested for disassembly. These disassembly sets include two sharp steel starter wedges and an appropriate number of "L"- shaped shims. The wedges are used to start the separation of the yellow Flex-Ring joint locking segments outward from the spigot while it is in the bell of an already assembled joint. The "L"-shaped shims are then hammered between the spigot and each locking segment. The thicker shims lift the locking segments entirely away from the spigot when fully inserted, and allow the spigot weld bead to pass under the locking segments generally located as shown in Figs. 1 and 2. Step-by-step instructions follow:

1. First straighten the joint as much as possible and push or pull the spigot back into the bell until it "bottoms out" in the rear of the socket. (Fig. 3)

2. Hammer a starter wedge under a yellow locking segment until an approximately 1/8" gap is seen between the segment and the spigot. (Fig. 4)

3. Hammer a second wedge (if necessary to start the shims) under the other end of the locking segment as in step 2.

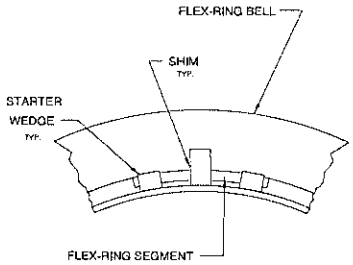

Figure 1
Starter shim and wedge arrangement for 14", 18", and 20" sizes.

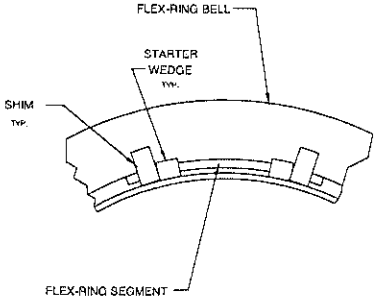

Figure 2
Shim and wedge arrangement for 16", 24", 30", 42", 48", and 54" sizes.

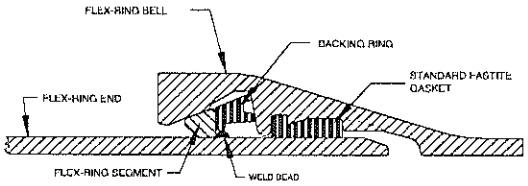

Figure 3

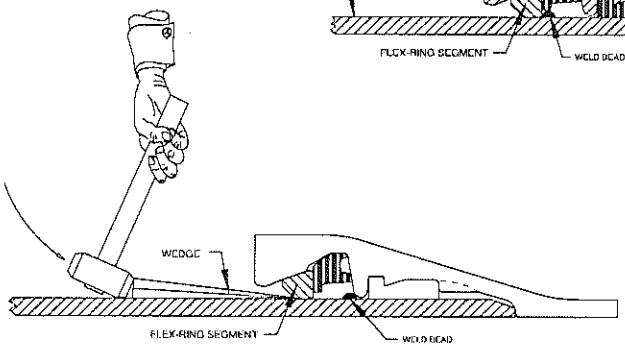

Figure 4

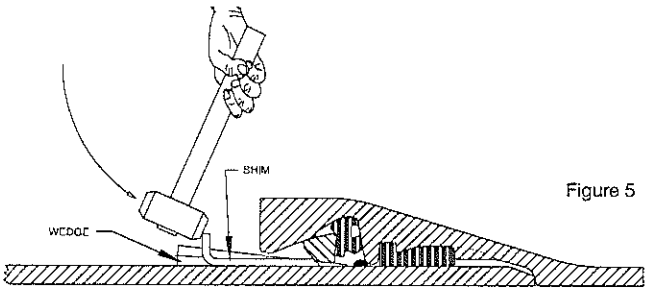

Figure 5

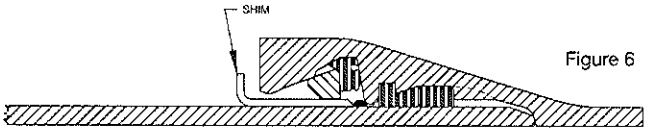

Figure 6

4. With a large hammer (such as a six pounder) vigorously drive one or two "L"-shaped shims under the locking segment until the ends of the shims firmly contact the spigot weld bead. (Fig. 5) Shims and wedges can be safely and firmly held against the pipe as they are hammered using a block of wood or a board. Safety precautions such as the wearing of safety glasses and keeping clear of the hammer during striking should always be taken to avoid injury.

5. Remove the starter wedges from between the locking segment and spigot, leaving the shim(s) in place. (Fig. 6) Note that the wedges are reused for each locking segment.

6. Drive wedges and shims under all locking segments as shown in steps 2-5. (See photo.) Check to be sure that the inner surface of all segments will not interfere with the spigot weld bead during joint separation after inserting shims.

7. Separate the joint. During joint separation, it is generally best to pull the spigot straight out of the socket. Extreme back and forth deflecting motions of the spigot during joint separation can cause shims to fall out of the joint and/or relocking to occur. If the joint does not readily come apart, check to see if one or more of the segments is in locking contact with the spigot weld bead. If so, push or deflect the spigot back in that location and add or replace shims as required.

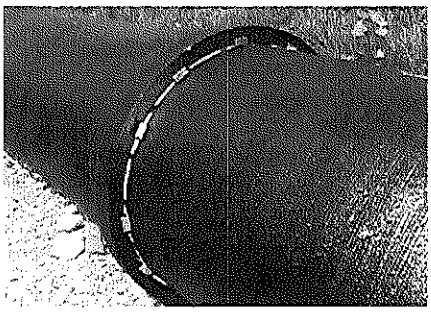

Disassembly kits accompanied by instructions for use can be furnished by AMERICAN upon request.

PHASE 1

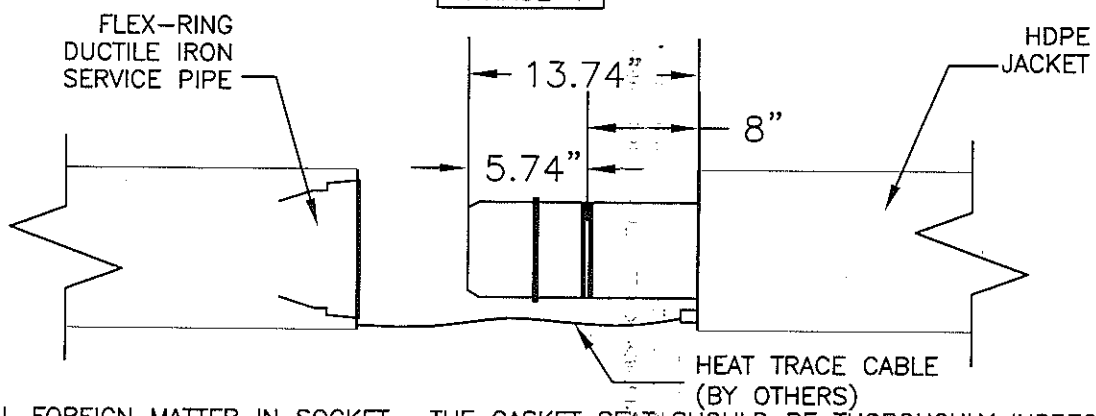

REMOVE ALL FOREIGN MATTER IN SOCKET. THE GASKET SEAT SHOULD BE THOROUGHLY INSPECTED TO BE CERTAIN IT IS CLEAN. FOREIGN MATTER IN THE GASKET SEAT MAY CAUSE A LEAK. LUBRICATE PIPE ENDS AND GASKET. LUBRICATE PIPE ENDS AS DIRECTED BY US PIPE. AFTER ALL JOINTS ARE CONNECTED, PULL HEAT TRACE CABLE FROM SPOOL AND PULL CABLE THROUGH PIPING SYSTEM.

PHASE 2

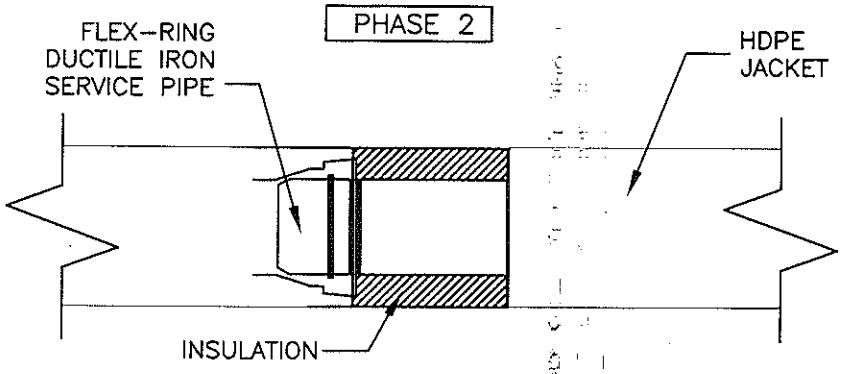

APPLY PRECUT INSULATION IN PLACE OVER JOINT. SOME TRIMMING MAY BE NECESSARY FOR A CLOSE FIT.

PHASE 3

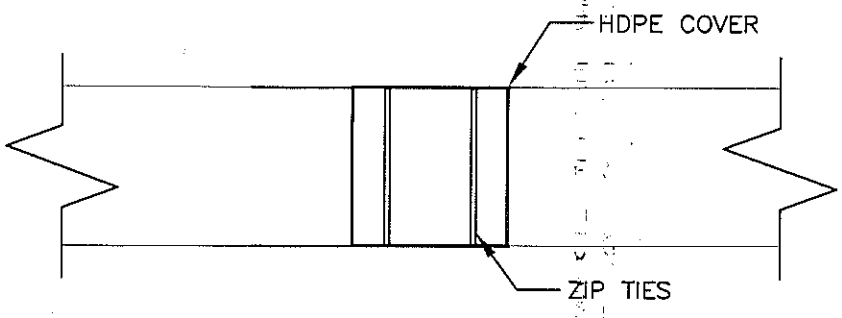

ONCE INSULATION IS IN PLACE AND SECURE, WRAP JOINT WITH HDPE COVER AND SECURE IN PLACE WITH ZIP TIES.

RIPLEY BRIDGE - RUTLAND, VT

FIELD JOINT KIT DETAIL	Date: 11/23/15	Dwg. No. DI–FJK
	Rev.:	

TRICON Piping Systems, Inc.®
P.O. Box 361, Canastota, New York 13032
Tel: 315.697.8787 Fax: 315.697.8788

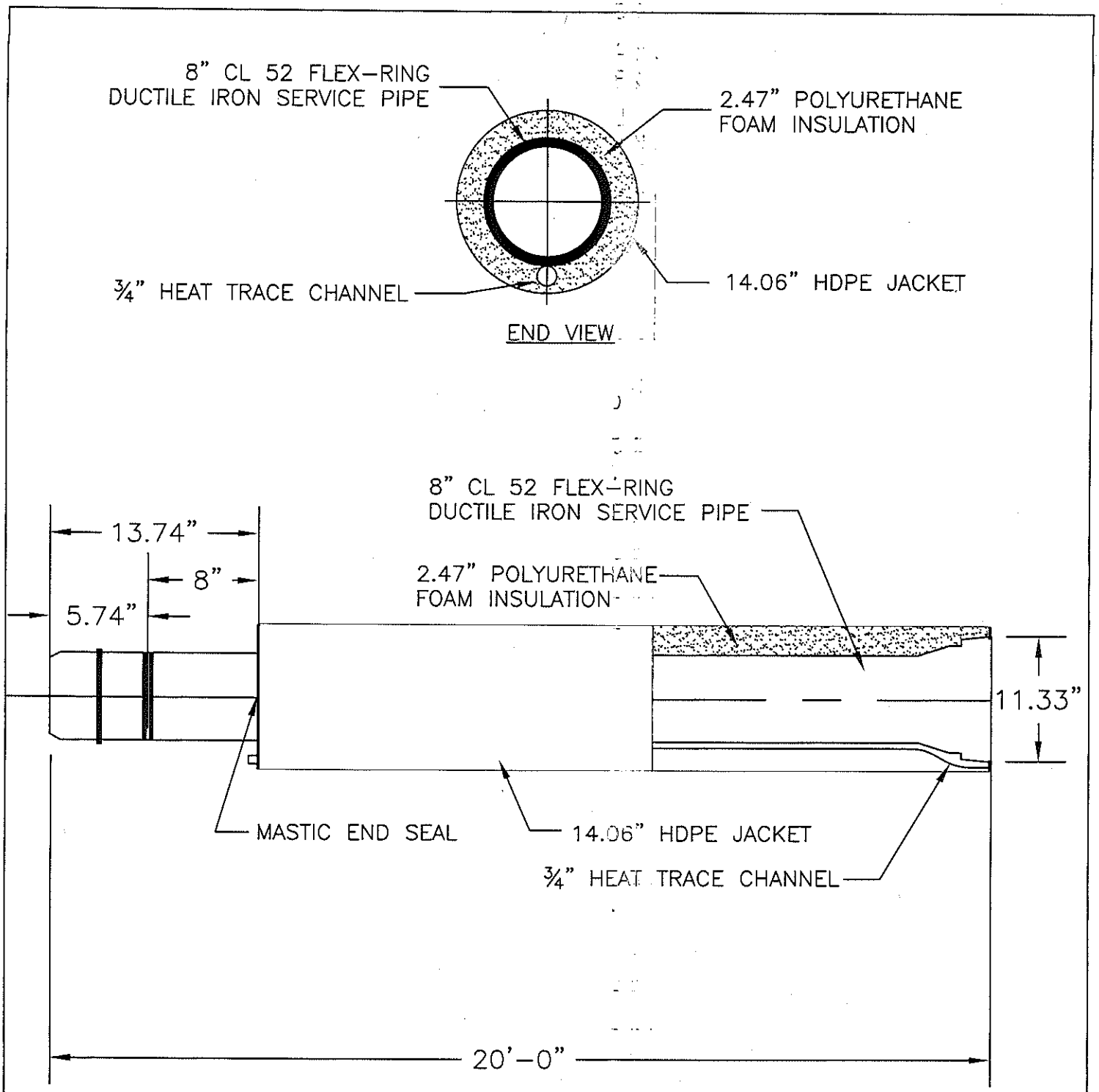

22 PCS

RIPLEY BRIDGE - RUTLAND, VT		TRICON Piping Systems, Inc. ®
8" WATER/SEWER STRAIGHT LENGTH DETAIL	Date: 11/23/15	Dwg. No.: DI-1
	Rev.:	

P.O. Box 361, Canastota, New York 13032
Tel: 315.697.8787 Fax: 315.697.8788

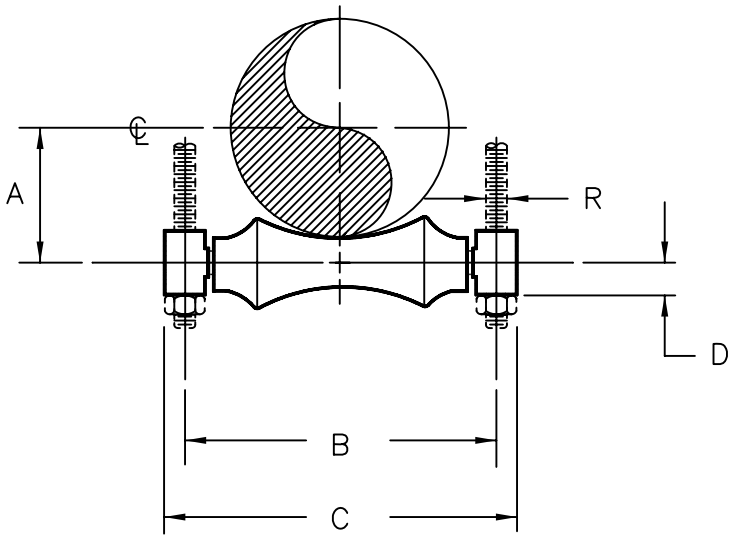

PIPE SIZE	A	B	C	D	R	MAX LOAD	UNIT WGT
1	1	3	4 1/8	5/8	3/8	600	0.45
1 1/4	1 1/4	3 3/8	4 1/2	5/8	3/8	600	0.48
1 1/2	1 3/8	3 5/8	4 3/4	5/8	3/8	600	0.51
2	1 5/8	4 1/8	5 1/4	5/8	3/8	600	0.57
2 1/2	2	5 1/2	7	7/8	1/2	600	1.50
3	2 1/4	6 1/8	7 5/8	7/8	1/2	700	1.50
3 1/2	2 1/2	6 5/8	8 1/8	7/8	1/2	700	1.70
4	2 7/8	7 1/8	8 5/8	7/8	5/8	700	1.80
5	3 1/2	8 3/8	9 7/8	7/8	5/8	700	2.40
6	4	9 5/8	11 3/8	1	5/8	1000	4.00
7	4 3/4	10 3/4	12 1/2	1	5/8	1200	6.00
8	5 1/8	12	14	1 1/8	7/8	1300	6.40
10	6 1/4	14 1/8	16	1 1/8	7/8	1700	8.50
12	7 1/2	16 1/8	18	1 1/8	7/8	2400	10.30
14	8 3/8	17 3/4	20	1 3/8	1	3100	20.90
16	9 1/2	19 7/8	22 1/8	1 3/8	1	3900	26.10
18	10 1/2	22 1/8	24 3/8	1 3/8	1	4200	36.60
20	11 5/8	24 1/8	26 5/8	1 1/2	1 1/4	4500	39.00
24	14	28 7/8	32 1/8	1 3/4	1 1/2	6100	66.90
30	17 1/2	35 1/2	39 7/8	2 1/8	1 1/2	7200	134.00

LOAD (LBS) • DIMENSIONS (INCHES) • WEIGHT (LBS)

MSS–SP–69 TYPE 41

REV	DATE	APP	DESCRIPTION
6			
5			
4			
3	03/01/07	UB	ADDED MSS-SP-69 TYPE NUMBER
2			
1			

CARPENTER AND PATERSON INC
WOBURN, MA 01801 / SADDLE BROOK, NJ 07663

SUBMITTAL DRAWING

MATERIAL: CARBON STEEL

FINISH: HOT DIP GALVANIZED

DESCRIPTION: TWO ROD ROLL HANGER

DRAWN	CHKD.	APPVD.	DATE	SCALE	SHEET
BM	RP	UB	12/93	N/A	1

DWG/FIGURE NO. 142G

REV 1

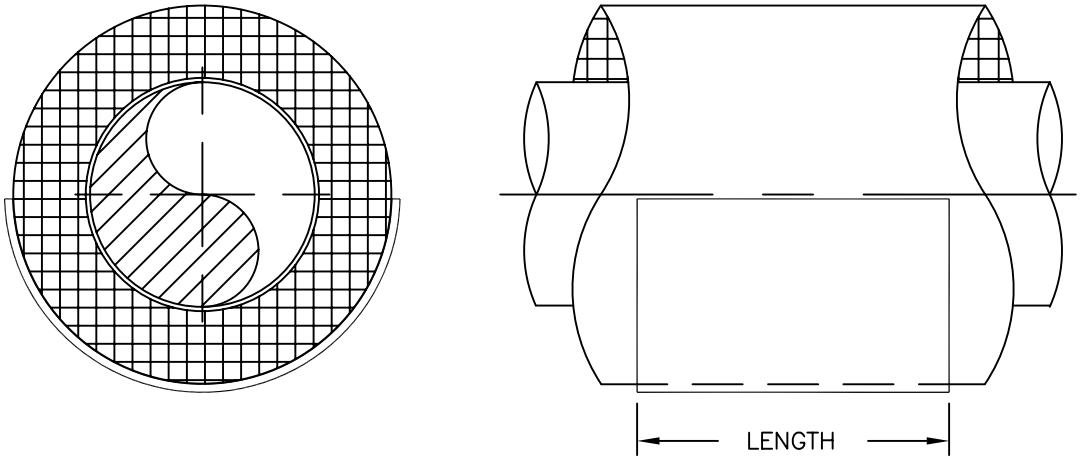

SIZE (I.D.)	HANGER SIZE	LENGTH	GA.	UNIT WGT
2.375	2	12	18	0.70
2.875	2 1/2	12	18	0.80
3.500	3	12	18	1.00
4.000	3 1/2	12	18	1.10
4.500	4	12	18	1.30
5.000	5	12	18	1.40
5.563	5	12	18	1.60
6.000	6	12	18	1.90
6.625	6	12	18	1.90
7.000	7	12	18	2.70
7.625	7	12	18	4.00
8.625	8	12	18	4.30
9.625	10	12	18	5.10
10.750	10	12	18	5.60
11.750	12	12	18	10.20
12.750	12	12	18	11.10
14.000	14	12	16	11.90
15.000	16	12	16	12.70
16.000	16	12	16	13.60
17.000	18	12	16	14.50
18.000	18	12	16	21.20
19.000	20	12	16	22.40
21.000	24	12	16	23.60

LOAD (LBS) • DIMENSIONS (INCHES) • WEIGHT (LBS)

MSS–SP–69 TYPE 40

REV	DATE	APP	DESCRIPTION
6			
5			
4			
3			
2			
1	03/14/07	UB	ADDED MSS-SP-69 TYPE NUMBER

CARPENTER AND PATERSON INC
WOBURN, MA 01801 / SADDLE BROOK, NJ 07663

SUBMITTAL DRAWING

MATERIAL: CARBON STEEL
FINISH: ELECTRO–GALVANIZED
DESCRIPTION: INSULATION SHIELD

DRAWN	CHKD.	APPVD.	DATE	SCALE	SHEET
BM	RP	UB	12/93	N/A	1

DWG/FIGURE NO. 265P
REV 1

EX-TEND®

Expansion Joint for Water and Waste Water Pipelines

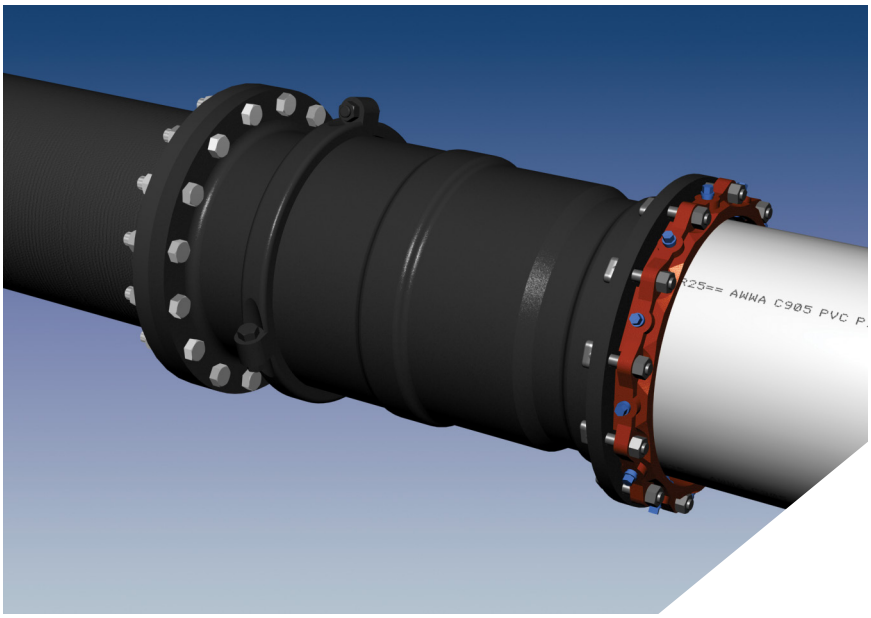

▲ *Series 216C0 EX-TEND, 16 inch combination mechanical joint by flanged expansion joint. (DIP by PVC)*
▼ *Series 216C0 EX-TEND, 16 inch combination mechanical joint by flanged expansion joint.*

Sample Specification

Expansion joints shall be installed in the locations indicated on the drawings and shall be manufactured of ductile iron conforming to the material properties of ANSI/AWWA C153/A21.53. All expansion joints shall be capable of expanding or contracting to the amounts shown on the drawings, or indicated in the specifications, but in no case shall there be less than 4" total axial movement. Separation beyond the maximum extension of the expansion joint shall be prevented without the use of external tie rods. Each expansion joint shall be pressure tested against its own restraint to a minimum of 350 psi (250 psi 24 inch and greater). MEGALUG joint restraint shall be provided with each mechanical joint connection. All internal surfaces (wetted parts) shall be lined with a minimum of 15 mils of fusion bonded epoxy conforming to the applicable requirements of ANSI/AWWA C213. Exterior surfaces shall be coated with a minimum of 6 mils of fusion bonded epoxy conforming to the applicable requirements of ANSI/AWWA C116/A21.16. Sealing gaskets shall be constructed of EPDM. The coating shall meet ANSI/NSF-61. All expansion joints shall be EX-TEND 200, as manufactured by EBAA Iron, Inc., or approved equal.

Features and Applications:

- Sizes 3 inch through 36 inch
- For Ductile Iron, Steel, PVC or HDPE pipe
- 3 inch through 20 inch rated at 350 PSI
  24 inch and greater rated at 250 PSI
- Constructed of ASTM A536 Ductile Iron
- Each unit tested to rated working pressure prior to shipment
- Self restrained at full expansion without the use of external tie bars
- Due to the design of the seals, no periodic maintenance is required
- Seals conform to the applicable requirements of ANSI/AWWA C111/A21.11
- End connections:
  Flanged Joint; 3 inch through 36 inch
  Mechanical Joint; 3 inch through 24 inch
  Combination of the two Joints available
- Flange outlets conform to the dimensional requirements of ANSI/AWWA C110/A21.10 (class 150) with the addition of an O-ring gasket which is provided to ensure a watertight seal
- Mechanical Joint end connections conform to the dimensional requirements of either ANSI/AWWA C111/A21.11 or ANSI/AWWA C153/A21.53 depending on size
- All "wetted" parts are coated with a NSF61 approved fusion bonded epoxy
- Insertion of additional sleeves for increased expansion capacity can be done at the factory or in the field as the need occurs

For use on water or wastewater pipelines subject to hydrostatic pressure and tested in accordance with either AWWA C600, C605, or ASTM D2774.

Copyright 2015 © EBAA IRON, INC.

FLEX-TEND, EX-TEND, AND FLEX-900 O-ring Groove

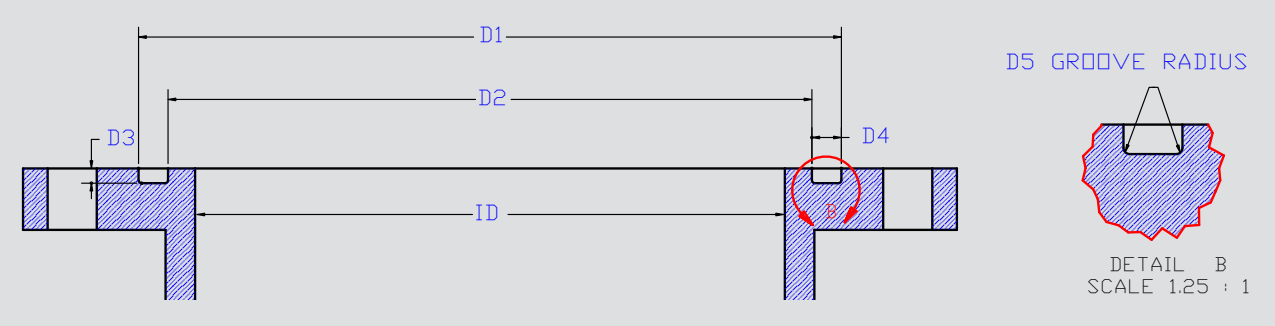

Size	D1	D2	D3	D4	D5	O-ring Diameter	O-ring Part Number
3	4.885	4.185	0.175	0.350	0.0625	0.25	983003
4	5.900	4.700	0.300	0.600	0.0625	0.5	983004
6	8.00	6.800	0.300	0.600	0.0625	0.5	983006
8	10.100	8.900	0.300	0.600	0.0625	0.5	983008
10	12.200	11.000	0.300	0.600	0.0625	0.5	983010
12	14.300	13.100	0.300	0.600	0.0625	0.5	983012
14	16.200	15.00	0.300	0.600	0.0625	0.5	983014
16	18.500	16.900	0.400	0.800	0.1250	0.625	983016
18	20.700	19.100	0.400	0.800	0.1250	0.625	983018
20	23.000	21.400	0.400	0.800	0.1250	0.625	983020
24	27.200	25.600	0.400	0.800	0.1250	0.625	983024
30	33.500	31.700	0.400	0.900	0.1250	0.75	983030
36	40.000	38.300	0.400	0.850	0.1250	0.75	983036
42	46.580	44.080	0.650	1.250	0.1250	N/A	983042
48	52.720	50.220	0.650	1.250	0.1250	1	983048

Determine your expansion requirements

Expansion Coefficient Table

Material	Coefficient inch/inch/degree F
Ductile Iron	0.0000062
PVC	0.000030
Cast Iron	0.0000058
Steel	0.0000065
HDPE	0.000080
Concrete	0.0000055

The Change in length (ΔL) due to thermal contraction/expansion is given by:

$$\Delta L = L\,(\Delta T)(C)$$

Where: L = length of pipe (inches)
ΔT = change in Temperature (degrees F)
C = coefficient of thermal expansion

Example:

1. Determine the Expansion Needed

   1000 Foot Bridge; 6 inch Ductile Iron Pipe; 120° F Total Temperature Change
   (1000)(12in/ft)(120° F)(0.0000062in/in/°F) = 8.93 in (Nearly 9 inches)

2. Select Proper Unit

   Referring to the chart on the opposite page, we will require a Series 206M2 EX-TEND because of the ability to accommodate the nine inches of expansion needed, with it's 12 inches of maximum expansion.

3. Determine the installation preset

   Factory preset for the EX-TEND is at 50% Contraction 50% Expansion setting, but the preset can be changed in the field to accommodate the present installation Temperature .

Series 200 EX-TEND® Submittal Reference Drawing

EBAA IRON

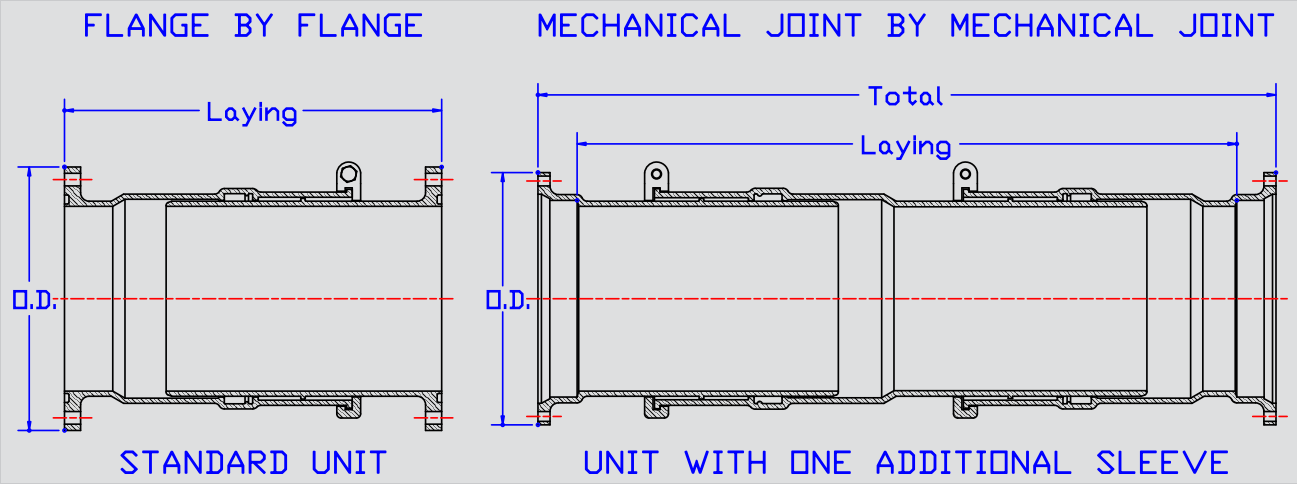

MADE IN USA

		Flange by Flange				Mechanical Joint by Mechanical Joint				
Nominal Pipe Size	Expansion (Linear)	Series Number	Maximum O.D.	Laying*	Weight (Approx)	Series Number	Maximum O.D.	Laying*	Total*	Weight (Approx)
	4	203F0	‡	‡	‡	203M0	‡	‡	‡	‡
3	8	203F1	‡	‡	‡	203M1	‡	‡	‡	‡
	12	203F2	‡	‡	‡	203M2	‡	‡	‡	‡
	4	204F0	11.0	18.2	69	204M0	11.0	15.6	20.6	74
4	8	204F1	11.0	33.5	113	204M1	11.0	30.9	35.9	118
	12	204F2	11.0	48.8	157	204M2	11.0	46.2	51.2	162
	4	206F0	12.4	19.5	95	206M0	12.4	15.4	20.4	96
6	8	206F1	12.4	33.8	160	206M1	12.4	29.7	34.7	161
	12	206F2	12.4	48.1	225	206M2	12.4	44.0	49.0	226
	4	208F0	14.8	20.7	143	208M0	14.8	16.4	21.4	139
8	8	208F1	14.8	37.8	235	208M1	14.8	33.5	38.5	231
	12	208F2	14.8	54.9	327	208M2	14.8	50.6	55.6	323
	4	210F0	17.0	21.0	196	210M0	17.0	16.5	21.5	192
10	8	210F1	17.0	36.8	333	210M1	17.0	30.5	35.5	329
	12	210F2	17.0	52.6	470	210M2	17.0	44.5	49.5	466
	4	212F0	19.3	21.5	245	212M0	19.3	19.2	24.2	244
12	8	212F1	19.3	37.5	396	212M1	19.3	35.2	40.2	395
	12	212F2	19.3	53.5	547	212M2	19.3	51.2	56.2	546
	8	214F0	22.3	32.4	389	214M0	22.3	27.0	34.0	432
14	16	214F1	22.3	58.8	677	214M1	22.3	53.3	60.0	677
	24	214F2	22.3	85.3	922	214M2	22.3	79.6	87.0	921
	8	216F0	24.5	33.9	621	216M0	24.5	31.3	38.8	621
16	16	216F1	24.5	61.8	959	216M1	24.5	59.2	66.2	959
	24	216F2	24.5	89.7	1297	216M2	24.5	87.1	94.1	1297
	8	218F0	27.1	33.7	661	218M0	27.1	27.6	34.6	652
18	16	218F1	27.1	60.8	1041	218M1	27.1	54.7	61.7	1032
	24	218F2	27.1	87.9	1421	218M2	27.1	81.8	88.8	1412
	8	220F0	27.5	32.7	701	220M0	27.5	27.5	34.5	683
20	16	220F1	27.5	60.0	1123	220M1	27.5	54.8	61.8	1105
	24	220F2	27.5	87.3	1545	220M2	27.5	82.1	89.1	1527
	8	224F0	34.9	33.5	908	224M0	34.9	29.0	36.0	882
24	16	224F1	34.9	60.8	1610	224M1	34.9	56.3	63.3	1584
	24	224F2	34.9	88.1	2312	224M2	34.9	83.6	90.6	2286
		230F0	‡	‡	‡	~	~	~	~	~
30	10	230F1	‡	‡	‡	~	~	~	~	~
		230F2	‡	‡	‡	~	~	~	~	~
36	10	236F0	49.2	46.8	2347	~	~	~	~	~

NOTE: Dimensions are in inches ± 1% and are subject to change without notice. Contact EBAA for availability of sizes not shown or listed.
* Laying Lengths and Total Lengths reflect unit set at midpoint of expansion capacity.
‡ Contact EBAA for sizes not listed.

Installation Instructions for EX-TEND® 200

1. Remove protective end covers.
2. Remove polyethylene sleeve and other material.
3. Check interior, remove dirt and foreign material from interior and end connections.
4. For buried applications install polyethylene sleeve per ANSI/AWWA C105/A21.5 recommendations.
5. Assembly of flange joint:
   a. Place flange o-ring in groove.
   b. Place EX-TEND flange against adjoining flange, install and hand tighten bolts.
   c. Tighten flange bolts.
6. Install mechanical joint EX-TEND end connections using the EBAA IRON MEGALUG® Joint Restraint suitable for adjacent pipe material.

   MEGALUG 1100 should be used on ductile iron pipe.

   MEGALUG 2000PV should be used on AWWA PVC pipe.

   Assembly instructions for each of these products are included with restraint device.
7. Assembly of restrained plain end:
   a. Lubricate and install EBAA-Seal® gasket provided over plain end per ANSI/AWWA C600.
   b. Insert plain end into adjacent mechanical joint bell.
   c. Install and hand tighten t-bolts.
   d. Tighten t-bolts per AWWA recommendations.
8. Remove shipping skid.
9. Touch up exterior coating as necessary. Use coal tar epoxy following

Important Notes

Due to hydrostatic forces that cause the EX-TEND 200 to expand, some applications may require blocking to isolate the areas of anticipated movement and to prevent this expansion from affecting adjacent piping.

The flanged outlets have dimensions according to ANSI/AWWA C110/A21.10 with each flange to ensure a proven water tight seal to a maximum of 350 PSI pressure.

Mechanical joint connections conform to the dimensional requirements of either ANSI/AWWA C110/A21.10 or ANSI/AWWA C153/A21.53 depending on the size.

EBAA IRON Sales, Inc.

P.O. Box 857, Eastland, TX 76448

Tel: (254) 629-1731

Fax: (254) 629-8931

(800) 433-1716 within US and Canada

contact@ebaa.com

www.ebaa.com

Members of...

AMERICAN FOUNDRY SOCIETY