KUBRICKY CONSTRUCTION CORP.
269 BALLARD ROAD

WILTON, NY 12831
518 792-5864

KUBRICKY CONSTRUCTION CORP.
A PROUD MEMBER OF THE D.A. COLLINS™ COMPANIES
An Equal Opportunity Employer

Rutland City BRF 3000 (2014036)
SUBMITTAL 80.2

**Issued 03/11/16**
Respond by 03/25/16

*To*

**Timothy Pockette, PE**

| | |
|---|---|
| Topic | 900.645 8 Inch Sewermain on Bridge R2 |
| Status | For Approval |

Message

Tim,
Please see revised submittal addressing comments from the previously returned from CHA.

Thanks,
Mike

*Courtesy Copy*

**Volker H.D. Burkowski**

*From*

**Mike Martin**

Signed by Mark C. Martin Date 3-11-16

Proceed as Indicated _____ Date _____
Owner Authorized Representative

# TR FLEX® RESTRAINED JOINT PIPE

For Generations

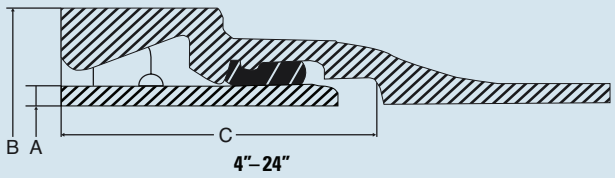


4"–24"

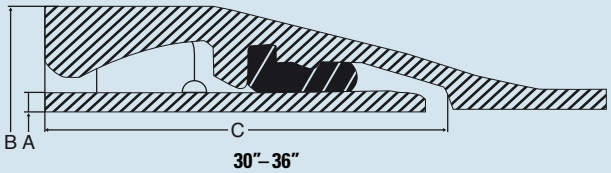


30"–36"

| Pipe Size In. | *Pressure Rating psi | A | B | C | # of D.I. Locking Segments | # of Rubber Segments Retainers | Max Deflection Degrees | Pullout |
|---|---|---|---|---|---|---|---|---|
| | | In. | PIPE In. | In. | | | | |
| 4 | 350 | 4.80 | 7.25 | 4.84 | 2 | 1 | 5 | 0.03 |
| 6 | 350 | 6.90 | 9.52 | 5.27 | 2 | 1 | 5 | 0.04 |
| 8 | 350 | 9.05 | 11.93 | 5.82 | 2 | 1 | 5 | 0.04 |
| 10 | 350 | 11.10 | 14.37 | 6.03 | 2 | 1 | 5 | 0.05 |
| 12 | 350 | 13.20 | 16.68 | 6.30 | 4 | 2 | 5 | 0.06 |
| 14 | 350 | 15.30 | 19.16 | 7.75 | 4 | 2 | 3-1/4 | 0.05 |
| 16 | 350 | 17.40 | 21.46 | 7.95 | 4 | 2 | 3-1/4 | 0.05 |
| 18 | 350 | 19.50 | 23.76 | 8.19 | 4 | 2 | 3 | 0.05 |
| 20 | 350 | 21.60 | 26.04 | 8.40 | 4 | 2 | 2-1/2 | 0.05 |
| 24 | 350 | 25.80 | 30.61 | 8.86 | 8 | 4 | 2-1/4 | 0.05 |
| 30 | 250 | 32.00 | 36.88 | 10.28 | 8 | 4 | 1-3/4 | 0.05 |
| 36 | 250 | 38.30 | 43.85 | 10.87 | 8 | 4 | 1-1/2 | 0.05 |

*The TR FLEX® Restrained Joint has a working pressure rating equivalent to the working pressure rating of the parent pipe with a maximum working pressure rating of 350 psi for 4 in. through 24 in. and 250 psi for 30 in. through 36 in.

NOTE: These deflections are based on joints with nominal dimensions.

**ASSEMBLY INSTRUCTIONS**

Step 1. (4"–10") Lay pipe such that one of the bell slots is accessible.
(12"–20") Lay pipe such that both of the bell slots are accessible, in the horizontal position if possible.
(24"–36") Lay pipe such that all four of the bell slots are accessible, in the diagonal position if possible.

Step 2. Clean the bell socket and insert gasket.

Step 3. Clean the spigot end to the assembly stripes.

Step 4. Lubricate the exposed surface of the gasket and pipe spigot end back to the weld bead.

Step 5. Make a normal push-on joint assembly, completely homing the pipe until the first assembly strip is in the bell socket. Keeping the joint in straight alignment during the assembly process.

Step 6. (4"–10") Insert the right-hand locking segment into a bell slot and slide the segment clockwise around the pipe.
(12"–36") Insert lower locking segment into a bell slot and slide the segment around the pipe.

Step 7. (4"–10") Insert left-hand locking segment into the bell slot and slide the segment counter-clockwise around the pipe.
(12"–36") Insert upper locking segment into the same bell slot and rotate around the pipe.

Step 8. (4"–10") Hold the segments apart and wedge the rubber retainer into the slot between the two locking segments.
(12"–36") Hold the upper segment in place and wedge the rubber retainer into the slot between the two locking segments.

Step 9. (4"–10") None.
(12"–20") Repeat steps 6–8 for other slot. Make sure that all 4 locking segments and 2 rubber retainers are securely in place.
(24"–36") Repeat steps 6–8 for other slot. Make sure that all 8 locking segments and 4 rubber retainers are securely in place.

Step 10. Extend the joint to remove the slack in the locking segment cavity. Joint extension is necessary to attain the marked laying length on the pipe and to minimize growth or extension of the line as it is pressurized.

Step 11. Set the joint deflection as required.


McWANE DUCTILE | IRON STRONG

Canada Pipe Company ULC

**NEW JERSEY**
183 Sitgreaves St.
Phillipsburg, NJ 08865
908-454-1161
mcwaneductile.com

**OHIO**
2266 S. 6th St.
Coshocton, OH 43812
740-622-6651
mcwaneductile.com

**UTAH**
1401 E 2000 S.
Provo, UT 84603
801-373-6910
mcwaneductile.com

**CANADA**
1757 Burlington St. E
Hamilton, ON L8N-3R5
905-547-3251
canadapipe.com



UL FM APPROVED NSF 61 ISO 9001 VPP DIPRA wsdo SMART certified Transparent. Quantified. Global.

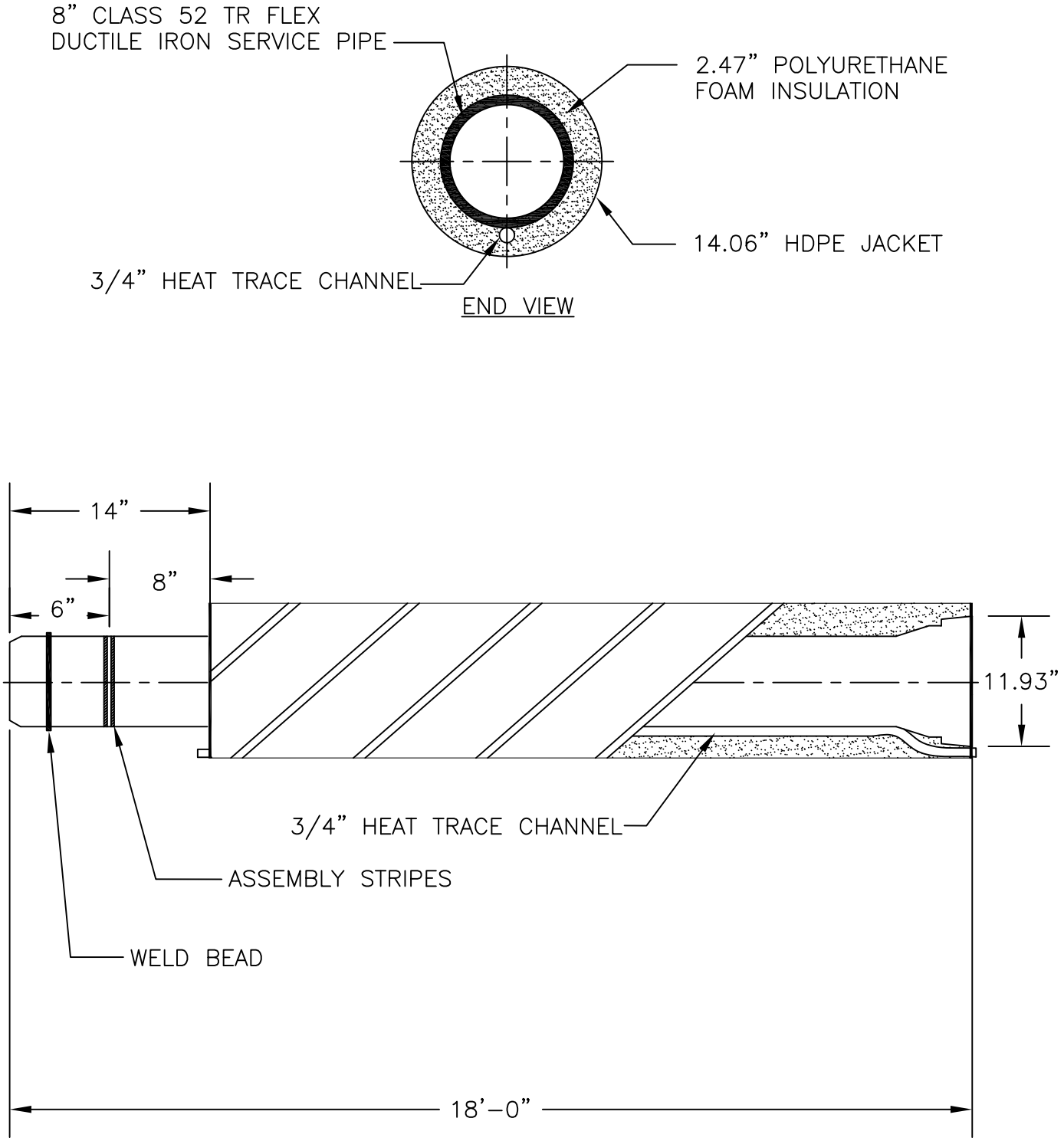


**22 PCS**

| | | |
|---|---|---|
| 8" CLASS 52 TR FLEX STRAIGHT LENGTH DETAIL | Date: 11/23/16 | Dwg. No.: DI-1 |
| | Rev.: 03/11/16 | |

TRICON Piping Systems, Inc. ®
P.O. Box 361, Canastota, New York 13032
Tel: 315.697.8787 Fax: 315.697.8788

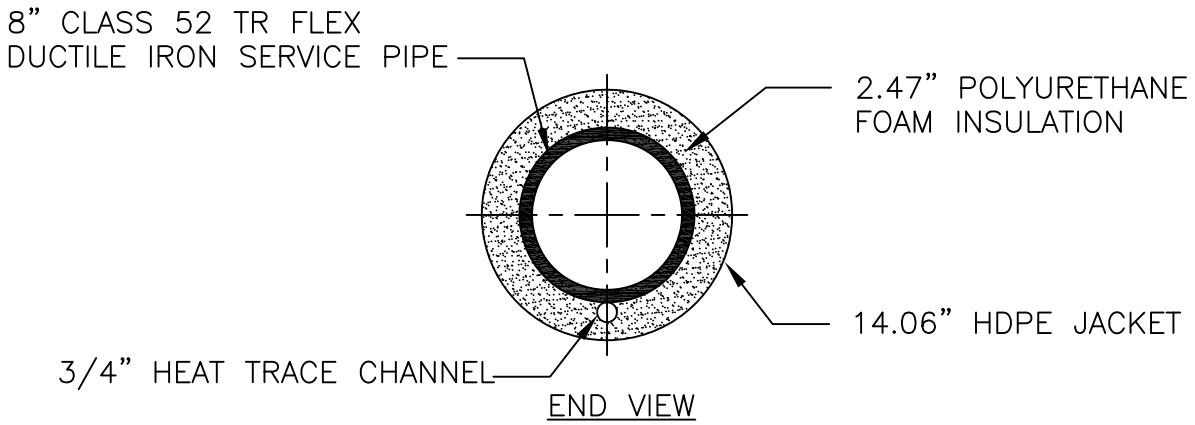


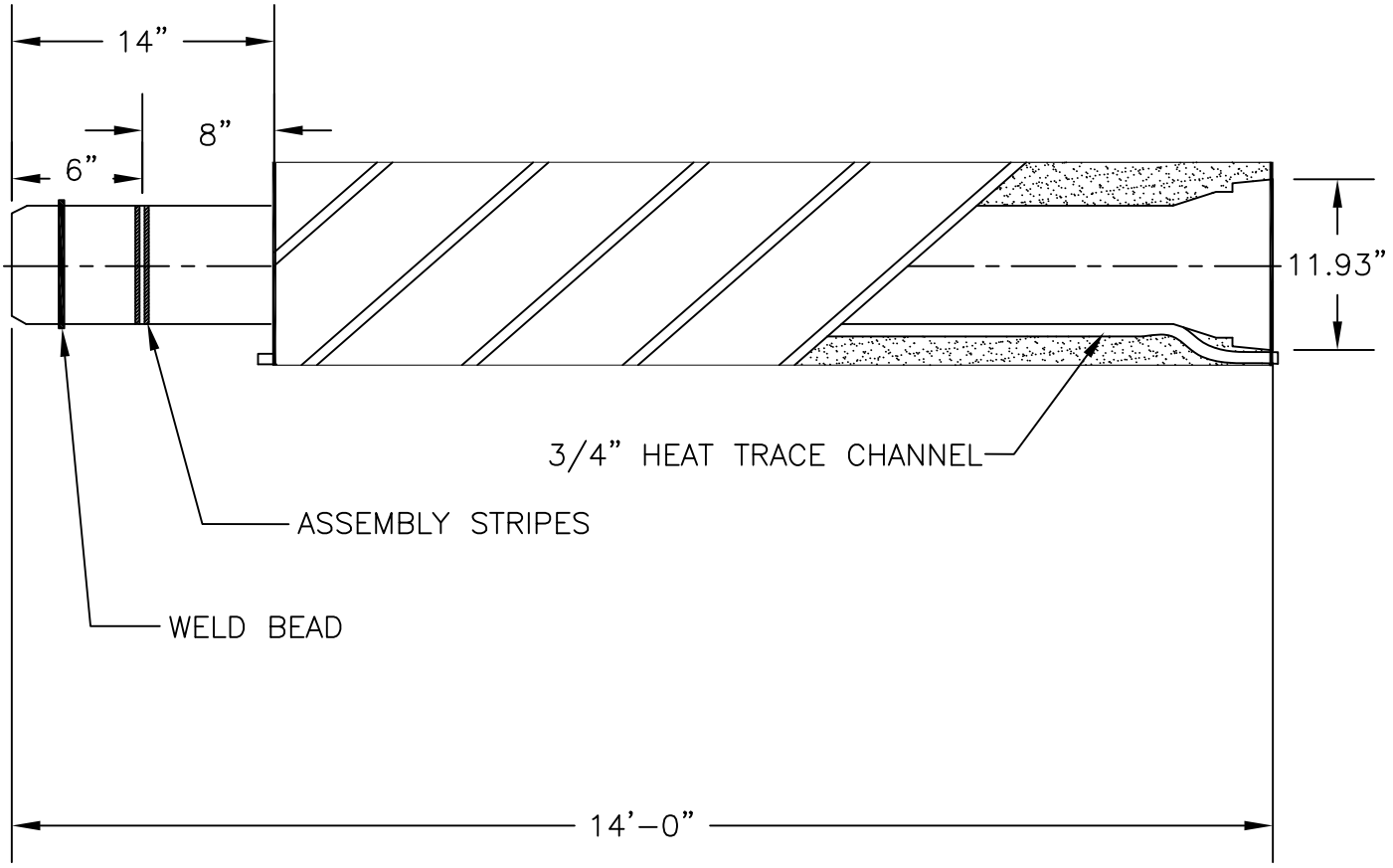


**4 PCS**

# RIPLEY BRIDGE - RUTLAND, VT

| | | |
|---|---|---|
| 8" CLASS 52 TR FLEX STRAIGHT LENGTH DETAIL | Date: 03/10/16 | Dwg. No.: DI-2 |
| | Rev.: | |

TRICON Piping Systems, Inc.®
P.O. Box 361, Canastota, New York 13032
Tel: 315.697.8787 Fax: 315.697.8788

PHASE 1

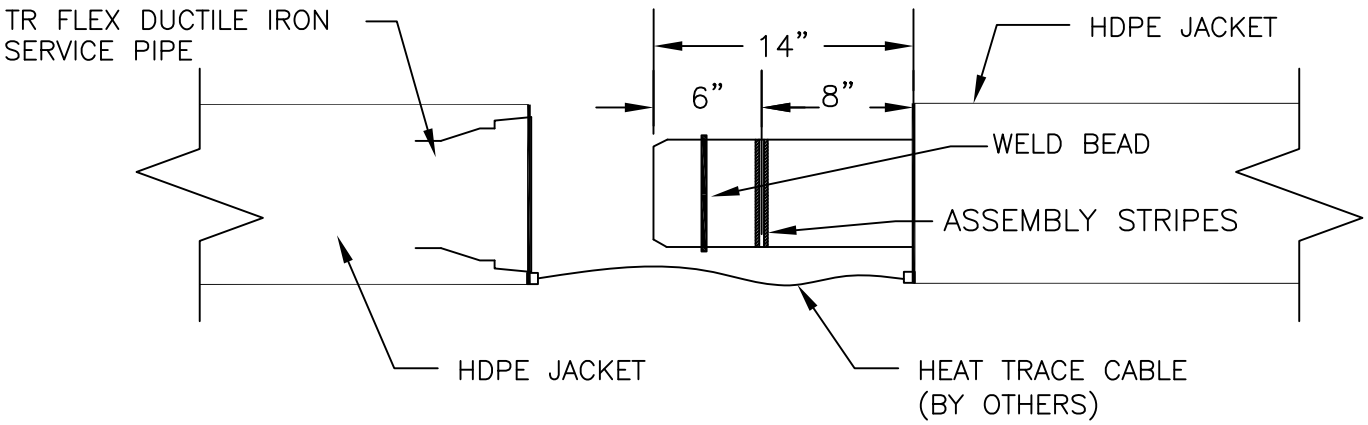


REMOVE ALL FOREIGN MATTER IN SOCKET. THE GASKET SEAT SHOULD BE THOROUGHLY INSPECTED TO BE CERTAIN IT IS CLEAN. FOREIGN MATTER IN THE GASKET SEAT MAY CAUSE A LEAK. LUBRICATE PIPE ENDS AND GASKET AS DIRECTED BY MCWANE PIPE. AFTER ALL JOINTS ARE CONNECTED, PULL HEAT TRACE CABLE FROM SPOOL AND PULL CABLE THROUGH PIPING SYSTEM

PHASE 2

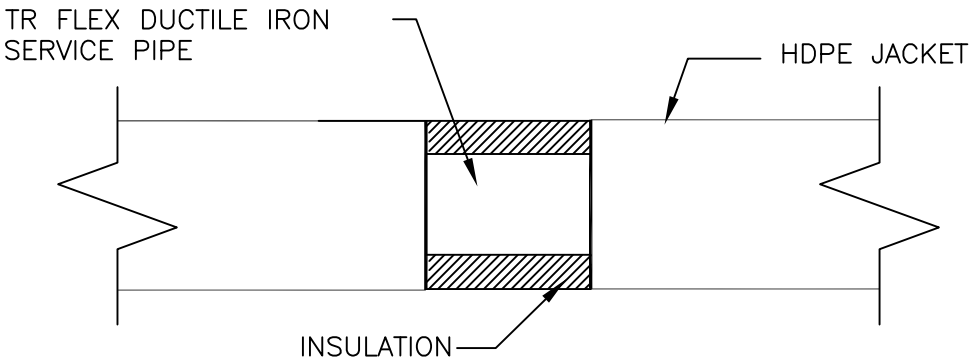


APPLY PRECUT INSULATION IN PLACE OVER JOINT. SOME TRIMMING MAY BE NECESSARY FOR A CLOSE FIT.

PHASE 3

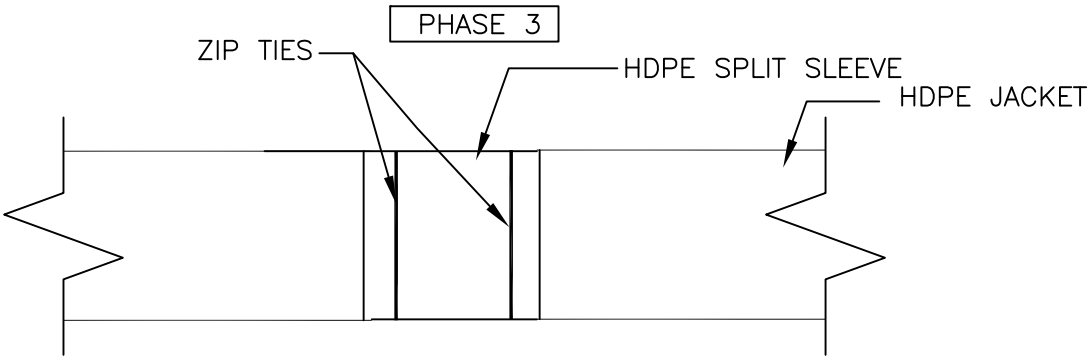


ONCE INSULATION IS IN PLACE AND SECURE, WRAP JOINT WITH AN OVERSIZED SPLIT HDPE SLEEVE AND SECURE IN PLACE WITH NYLON (ZIP TIES) STRAPPING.

## RIPLEY BRIDGE - RUTLAND, VT

| | | |
|---|---|---|
| 8" CLASS 52 TR FLEX FIELD JOINT KIT DETAIL | Date: 11/23/15 | Dwg. No. DI–FJK |
| | Rev.: 03/11/16 | |

TRICON Piping Systems, Inc. ®
P.O. Box 361, Canastota, New York 13032
Tel: 315.697.8787 Fax: 315.697.8788

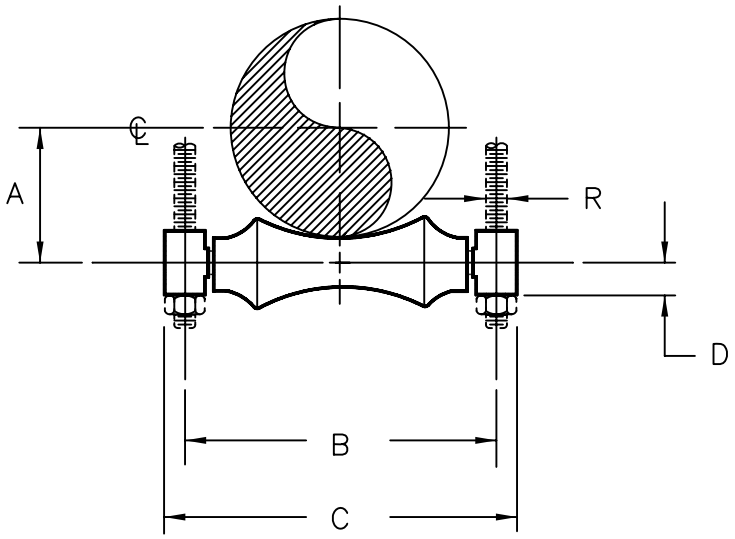


| PIPE SIZE | A | B | C | D | R | MAX LOAD | UNIT WGT |
|---|---|---|---|---|---|---|---|
| 1 | 1 | 3 | 4 1/8 | 5/8 | 3/8 | 600 | 0.45 |
| 1 1/4 | 1 1/4 | 3 3/8 | 4 1/2 | 5/8 | 3/8 | 600 | 0.48 |
| 1 1/2 | 1 3/8 | 3 5/8 | 4 3/4 | 5/8 | 3/8 | 600 | 0.51 |
| 2 | 1 5/8 | 4 1/8 | 5 1/4 | 5/8 | 3/8 | 600 | 0.57 |
| 2 1/2 | 2 | 5 1/2 | 7 | 7/8 | 1/2 | 600 | 1.50 |
| 3 | 2 1/4 | 6 1/8 | 7 5/8 | 7/8 | 1/2 | 700 | 1.50 |
| 3 1/2 | 2 1/2 | 6 5/8 | 8 1/8 | 7/8 | 1/2 | 700 | 1.70 |
| 4 | 2 7/8 | 7 1/8 | 8 5/8 | 7/8 | 5/8 | 700 | 1.80 |
| 5 | 3 1/2 | 8 3/8 | 9 7/8 | 7/8 | 5/8 | 700 | 2.40 |
| 6 | 4 | 9 5/8 | 11 3/8 | 1 | 5/8 | 1000 | 4.00 |
| 7 | 4 3/4 | 10 3/4 | 12 1/2 | 1 | 5/8 | 1200 | 6.00 |
| 8 | 5 1/8 | 12 | 14 | 1 1/8 | 7/8 | 1300 | 6.40 |
| 10 | 6 1/4 | 14 1/8 | 16 | 1 1/8 | 7/8 | 1700 | 8.50 |
| 12 | 7 1/2 | 16 1/8 | 18 | 1 1/8 | 7/8 | 2400 | 10.30 |
| 14 | 8 3/8 | 17 3/4 | 20 | 1 3/8 | 1 | 3100 | 20.90 |
| 16 | 9 1/2 | 19 7/8 | 22 1/8 | 1 3/8 | 1 | 3900 | 26.10 |
| 18 | 10 1/2 | 22 1/8 | 24 3/8 | 1 3/8 | 1 | 4200 | 36.60 |
| 20 | 11 5/8 | 24 1/8 | 26 5/8 | 1 1/2 | 1 1/4 | 4500 | 39.00 |
| 24 | 14 | 28 7/8 | 32 1/8 | 1 3/4 | 1 1/2 | 6100 | 66.90 |
| 30 | 17 1/2 | 35 1/2 | 39 7/8 | 2 1/8 | 1 1/2 | 7200 | 134.00 |

LOAD (LBS) • DIMENSIONS (INCHES) • WEIGHT (LBS)

MSS–SP–69 TYPE 41

| REV | DATE | APP | DESCRIPTION |
|---|---|---|---|
| 6 | | | |
| 5 | | | |
| 4 | | | |
| 3 | 03/01/07 | UB | ADDED MSS-SP-69 TYPE NUMBER |
| 2 | | | |
| 1 | | | |

**CARPENTER AND PATERSON INC**
WOBURN, MA 01801 / SADDLE BROOK, NJ 07663

# SUBMITTAL DRAWING

MATERIAL: CARBON STEEL

FINISH: HOT DIP GALVANIZED

DESCRIPTION: TWO ROD ROLL HANGER

| DRAWN | CHKD. | APPVD. | DATE | SCALE | SHEET |
|---|---|---|---|---|---|
| BM | RP | UB | 12/93 | N/A | 1 |

DWG/FIGURE NO. 142G

REV 1

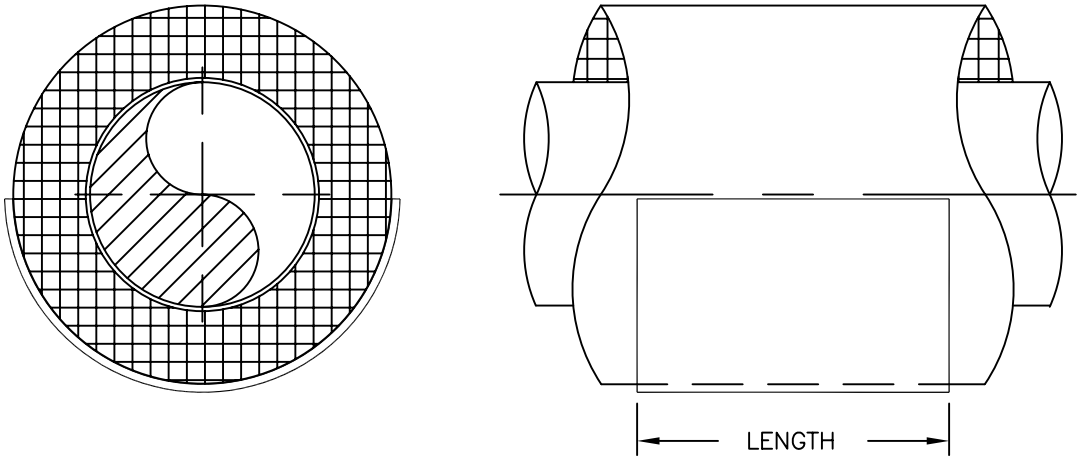


| SIZE (I.D.) | HANGER SIZE | LENGTH | GA. | UNIT WGT |
|---|---|---|---|---|
| 2.375 | 2 | 12 | 18 | 0.70 |
| 2.875 | 2 1/2 | 12 | 18 | 0.80 |
| 3.500 | 3 | 12 | 18 | 1.00 |
| 4.000 | 3 1/2 | 12 | 18 | 1.10 |
| 4.500 | 4 | 12 | 18 | 1.30 |
| 5.000 | 5 | 12 | 18 | 1.40 |
| 5.563 | 5 | 12 | 18 | 1.60 |
| 6.000 | 6 | 12 | 18 | 1.90 |
| 6.625 | 6 | 12 | 18 | 1.90 |
| 7.000 | 7 | 12 | 18 | 2.70 |
| 7.625 | 7 | 12 | 18 | 4.00 |
| 8.625 | 8 | 12 | 18 | 4.30 |
| 9.625 | 10 | 12 | 18 | 5.10 |
| 10.750 | 10 | 12 | 18 | 5.60 |
| 11.750 | 12 | 12 | 18 | 10.20 |
| 12.750 | 12 | 12 | 18 | 11.10 |
| 14.000 | 14 | 12 | 16 | 11.90 |
| 15.000 | 16 | 12 | 16 | 12.70 |
| 16.000 | 16 | 12 | 16 | 13.60 |
| 17.000 | 18 | 12 | 16 | 14.50 |
| 18.000 | 18 | 12 | 16 | 21.20 |
| 19.000 | 20 | 12 | 16 | 22.40 |
| 21.000 | 24 | 12 | 16 | 23.60 |

LOAD (LBS) • DIMENSIONS (INCHES) • WEIGHT (LBS)

MSS–SP–69 TYPE 40

| REV | DATE | APP | DESCRIPTION |
|---|---|---|---|
| 6 | | | |
| 5 | | | |
| 4 | | | |
| 3 | | | |
| 2 | | | |
| 1 | 03/14/07 | UB | ADDED MSS-SP-69 TYPE NUMBER |

**CARPENTER AND PATERSON INC**
WOBURN, MA 01801 / SADDLE BROOK, NJ 07663

# SUBMITTAL DRAWING

MATERIAL: CARBON STEEL
FINISH: ELECTRO–GALVANIZED
DESCRIPTION: INSULATION SHIELD

| DRAWN | CHKD. | APPVD. | DATE | SCALE | SHEET |
|---|---|---|---|---|---|
| BM | RP | UB | 12/93 | N/A | 1 |

DWG/FIGURE NO. 265P
REV 1

# EX-TEND®

## Expansion Joint for Water and Waste Water Pipelines

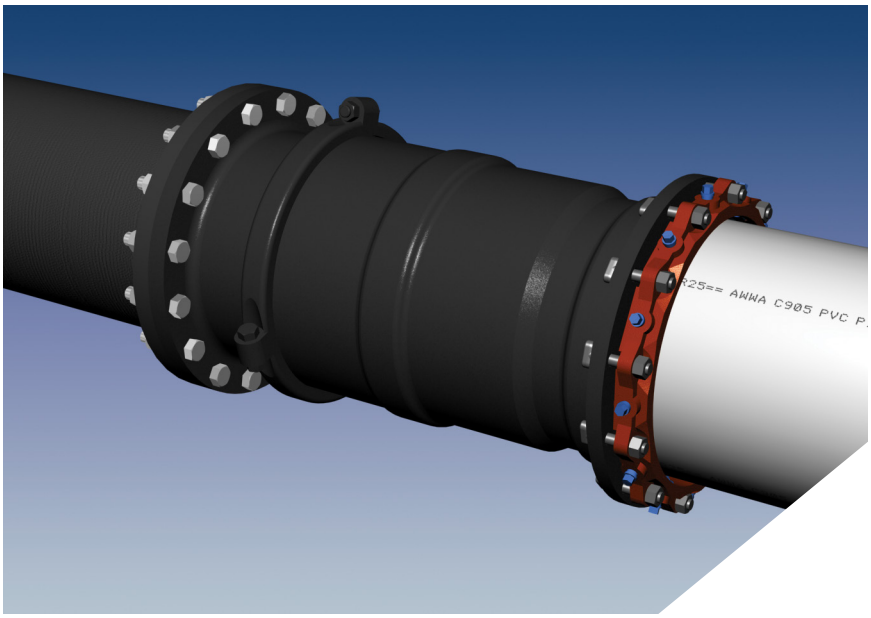


▲ *Series 216C0 EX-TEND, 16 inch combination mechanical joint by flanged expansion joint. (DIP by PVC)*
▼ *Series 216C0 EX-TEND, 16 inch combination mechanical joint by flanged expansion joint.*

### Sample Specification

Expansion joints shall be installed in the locations indicated on the drawings and shall be manufactured of ductile iron conforming to the material properties of ANSI/AWWA C153/A21.53. All expansion joints shall be capable of expanding or contracting to the amounts shown on the drawings, or indicated in the specifications, but in no case shall there be less than 4" total axial movement. Separation beyond the maximum extension of the expansion joint shall be prevented without the use of external tie rods. Each expansion joint shall be pressure tested against its own restraint to a minimum of 350 psi (250 psi 24 inch and greater). MEGALUG joint restraint shall be provided with each mechanical joint connection. All internal surfaces (wetted parts) shall be lined with a minimum of 15 mils of fusion bonded epoxy conforming to the applicable requirements of ANSI/AWWA C213. Exterior surfaces shall be coated with a minimum of 6 mils of fusion bonded epoxy conforming to the applicable requirements of ANSI/AWWA C116/A21.16. Sealing gaskets shall be constructed of EPDM. The coating shall meet ANSI/NSF-61. All expansion joints shall be EX-TEND 200, as manufactured by EBAA Iron, Inc., or approved equal.

### Features and Applications:

- Sizes 3 inch through 36 inch
- For Ductile Iron, Steel, PVC or HDPE pipe
- 3 inch through 20 inch rated at 350 PSI
  24 inch and greater rated at 250 PSI
- Constructed of ASTM A536 Ductile Iron
- Each unit tested to rated working pressure prior to shipment
- Self restrained at full expansion without the use of external tie bars
- Due to the design of the seals, no periodic maintenance is required
- Seals conform to the applicable requirements of ANSI/AWWA C111/A21.11
- End connections:
  Flanged Joint; 3 inch through 36 inch
  Mechanical Joint; 3 inch through 24 inch
  Combination of the two Joints available
- Flange outlets conform to the dimensional requirements of ANSI/AWWA C110/A21.10 (class 150) with the addition of an O-ring gasket which is provided to ensure a watertight seal
- Mechanical Joint end connections conform to the dimensional requirements of either ANSI/AWWA C111/A21.11 or ANSI/AWWA C153/A21.53 depending on size
- All "wetted" parts are coated with a NSF61 approved fusion bonded epoxy
- Insertion of additional sleeves for increased expansion capacity can be done at the factory or in the field as the need occurs

For use on water or wastewater pipelines subject to hydrostatic pressure and tested in accordance with either AWWA C600, C605, or ASTM D2774.


Copyright 2015 © EBAA IRON, INC.

## FLEX-TEND, EX-TEND, AND FLEX-900 O-ring Groove

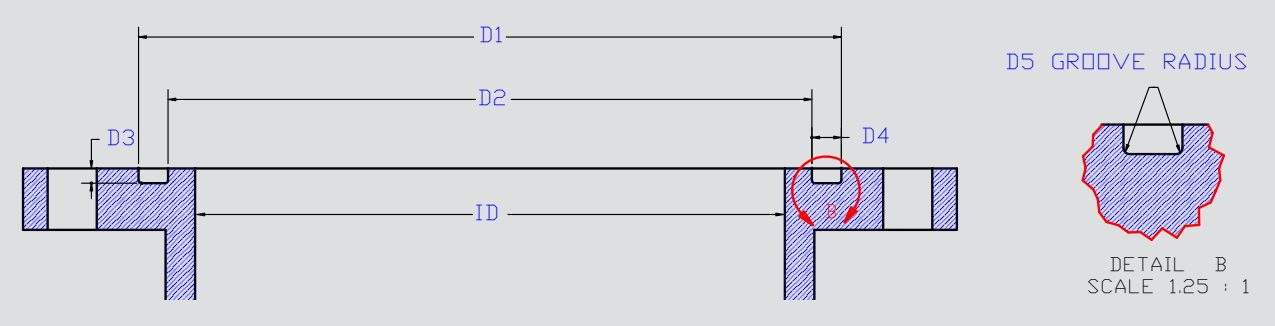


| Size | D1 | D2 | D3 | D4 | D5 | O-ring Diameter | O-ring Part Number |
|---|---|---|---|---|---|---|---|
| 3 | 4.885 | 4.185 | 0.175 | 0.350 | 0.0625 | 0.25 | 983003 |
| 4 | 5.900 | 4.700 | 0.300 | 0.600 | 0.0625 | 0.5 | 983004 |
| 6 | 8.00 | 6.800 | 0.300 | 0.600 | 0.0625 | 0.5 | 983006 |
| 8 | 10.100 | 8.900 | 0.300 | 0.600 | 0.0625 | 0.5 | 983008 |
| 10 | 12.200 | 11.000 | 0.300 | 0.600 | 0.0625 | 0.5 | 983010 |
| 12 | 14.300 | 13.100 | 0.300 | 0.600 | 0.0625 | 0.5 | 983012 |
| 14 | 16.200 | 15.00 | 0.300 | 0.600 | 0.0625 | 0.5 | 983014 |
| 16 | 18.500 | 16.900 | 0.400 | 0.800 | 0.1250 | 0.625 | 983016 |
| 18 | 20.700 | 19.100 | 0.400 | 0.800 | 0.1250 | 0.625 | 983018 |
| 20 | 23.000 | 21.400 | 0.400 | 0.800 | 0.1250 | 0.625 | 983020 |
| 24 | 27.200 | 25.600 | 0.400 | 0.800 | 0.1250 | 0.625 | 983024 |
| 30 | 33.500 | 31.700 | 0.400 | 0.900 | 0.1250 | 0.75 | 983030 |
| 36 | 40.000 | 38.300 | 0.400 | 0.850 | 0.1250 | 0.75 | 983036 |
| 42 | 46.580 | 44.080 | 0.650 | 1.250 | 0.1250 | N/A | 983042 |
| 48 | 52.720 | 50.220 | 0.650 | 1.250 | 0.1250 | 1 | 983048 |

# Determine your expansion requirements

### Expansion Coefficient Table

| Material | Coefficient inch/inch/degree F |
|---|---|
| Ductile Iron | 0.0000062 |
| PVC | 0.000030 |
| Cast Iron | 0.0000058 |
| Steel | 0.0000065 |
| HDPE | 0.000080 |
| Concrete | 0.0000055 |

The Change in length ($\Delta L$) due to thermal contraction/expansion is given by:

$$\Delta L = L\,(\Delta T)(C)$$

Where: L = length of pipe (inches)
$\Delta T$ = change in Temperature (degrees F)
C = coefficient of thermal expansion

Example:

1. Determine the Expansion Needed

   1000 Foot Bridge; 6 inch Ductile Iron Pipe; 120° F Total Temperature Change
   (1000)(12in/ft)(120° F)(0.0000062in/in/°F) = 8.93 in (Nearly 9 inches)

2. Select Proper Unit

   Referring to the chart on the opposite page, we will require a Series 206M2 EX-TEND because of the ability to accommodate the nine inches of expansion needed, with it's 12 inches of maximum expansion.

3. Determine the installation preset

   Factory preset for the EX-TEND is at 50% Contraction 50% Expansion setting, but the preset can be changed in the field to accommodate the present installation Temperature .

## Series 200 EX-TEND® Submittal Reference Drawing

EBAA IRON

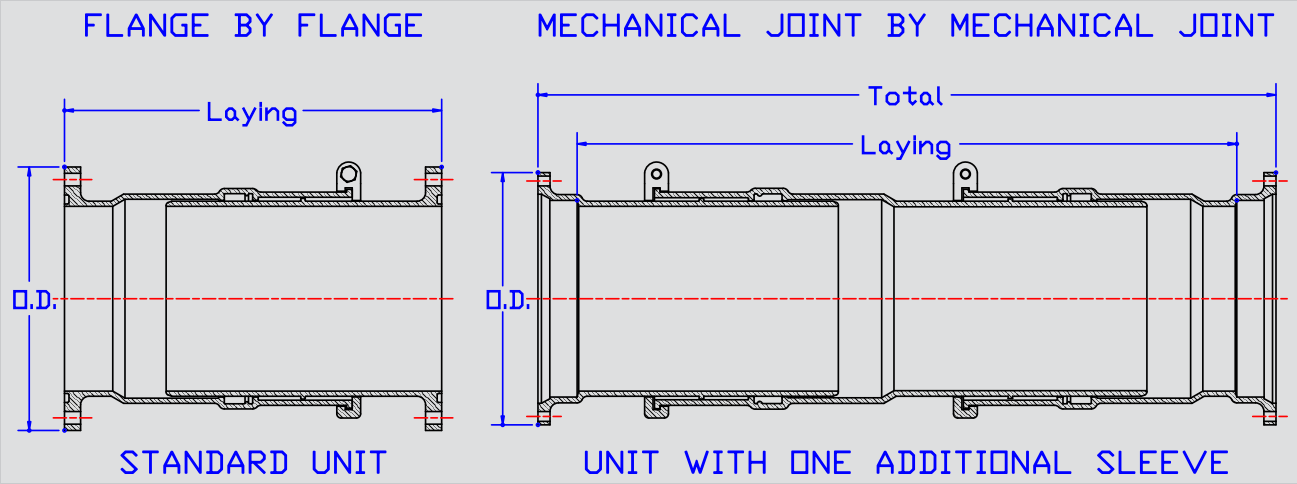


MADE IN USA

| | | Flange by Flange | | | | Mechanical Joint by Mechanical Joint | | | | |
|---|---|---|---|---|---|---|---|---|---|---|
| Nominal Pipe Size | Expansion (Linear) | Series Number | Maximum O.D. | Laying* | Weight (Approx) | Series Number | Maximum O.D. | Laying* | Total* | Weight (Approx) |
| | 4 | 203F0 | ‡ | ‡ | ‡ | 203M0 | ‡ | ‡ | ‡ | ‡ |
| 3 | 8 | 203F1 | ‡ | ‡ | ‡ | 203M1 | ‡ | ‡ | ‡ | ‡ |
| | 12 | 203F2 | ‡ | ‡ | ‡ | 203M2 | ‡ | ‡ | ‡ | ‡ |
| | 4 | 204F0 | 11.0 | 18.2 | 69 | 204M0 | 11.0 | 15.6 | 20.6 | 74 |
| 4 | 8 | 204F1 | 11.0 | 33.5 | 113 | 204M1 | 11.0 | 30.9 | 35.9 | 118 |
| | 12 | 204F2 | 11.0 | 48.8 | 157 | 204M2 | 11.0 | 46.2 | 51.2 | 162 |
| | 4 | 206F0 | 12.4 | 19.5 | 95 | 206M0 | 12.4 | 15.4 | 20.4 | 96 |
| 6 | 8 | 206F1 | 12.4 | 33.8 | 160 | 206M1 | 12.4 | 29.7 | 34.7 | 161 |
| | 12 | 206F2 | 12.4 | 48.1 | 225 | 206M2 | 12.4 | 44.0 | 49.0 | 226 |
| | 4 | 208F0 | 14.8 | 20.7 | 143 | 208M0 | 14.8 | 16.4 | 21.4 | 139 |
| 8 | 8 | 208F1 | 14.8 | 37.8 | 235 | 208M1 | 14.8 | 33.5 | 38.5 | 231 |
| | 12 | 208F2 | 14.8 | 54.9 | 327 | 208M2 | 14.8 | 50.6 | 55.6 | 323 |
| | 4 | 210F0 | 17.0 | 21.0 | 196 | 210M0 | 17.0 | 16.5 | 21.5 | 192 |
| 10 | 8 | 210F1 | 17.0 | 36.8 | 333 | 210M1 | 17.0 | 30.5 | 35.5 | 329 |
| | 12 | 210F2 | 17.0 | 52.6 | 470 | 210M2 | 17.0 | 44.5 | 49.5 | 466 |
| | 4 | 212F0 | 19.3 | 21.5 | 245 | 212M0 | 19.3 | 19.2 | 24.2 | 244 |
| 12 | 8 | 212F1 | 19.3 | 37.5 | 396 | 212M1 | 19.3 | 35.2 | 40.2 | 395 |
| | 12 | 212F2 | 19.3 | 53.5 | 547 | 212M2 | 19.3 | 51.2 | 56.2 | 546 |
| | 8 | 214F0 | 22.3 | 32.4 | 389 | 214M0 | 22.3 | 27.0 | 34.0 | 432 |
| 14 | 16 | 214F1 | 22.3 | 58.8 | 677 | 214M1 | 22.3 | 53.3 | 60.0 | 677 |
| | 24 | 214F2 | 22.3 | 85.3 | 922 | 214M2 | 22.3 | 79.6 | 87.0 | 921 |
| | 8 | 216F0 | 24.5 | 33.9 | 621 | 216M0 | 24.5 | 31.3 | 38.8 | 621 |
| 16 | 16 | 216F1 | 24.5 | 61.8 | 959 | 216M1 | 24.5 | 59.2 | 66.2 | 959 |
| | 24 | 216F2 | 24.5 | 89.7 | 1297 | 216M2 | 24.5 | 87.1 | 94.1 | 1297 |
| | 8 | 218F0 | 27.1 | 33.7 | 661 | 218M0 | 27.1 | 27.6 | 34.6 | 652 |
| 18 | 16 | 218F1 | 27.1 | 60.8 | 1041 | 218M1 | 27.1 | 54.7 | 61.7 | 1032 |
| | 24 | 218F2 | 27.1 | 87.9 | 1421 | 218M2 | 27.1 | 81.8 | 88.8 | 1412 |
| | 8 | 220F0 | 27.5 | 32.7 | 701 | 220M0 | 27.5 | 27.5 | 34.5 | 683 |
| 20 | 16 | 220F1 | 27.5 | 60.0 | 1123 | 220M1 | 27.5 | 54.8 | 61.8 | 1105 |
| | 24 | 220F2 | 27.5 | 87.3 | 1545 | 220M2 | 27.5 | 82.1 | 89.1 | 1527 |
| | 8 | 224F0 | 34.9 | 33.5 | 908 | 224M0 | 34.9 | 29.0 | 36.0 | 882 |
| 24 | 16 | 224F1 | 34.9 | 60.8 | 1610 | 224M1 | 34.9 | 56.3 | 63.3 | 1584 |
| | 24 | 224F2 | 34.9 | 88.1 | 2312 | 224M2 | 34.9 | 83.6 | 90.6 | 2286 |
| | | 230F0 | ‡ | ‡ | ‡ | ~ | ~ | ~ | ~ | ~ |
| 30 | 10 | 230F1 | ‡ | ‡ | ‡ | ~ | ~ | ~ | ~ | ~ |
| | | 230F2 | ‡ | ‡ | ‡ | ~ | ~ | ~ | ~ | ~ |
| 36 | 10 | 236F0 | 49.2 | 46.8 | 2347 | ~ | ~ | ~ | ~ | ~ |

NOTE: Dimensions are in inches ± 1% and are subject to change without notice. Contact EBAA for availability of sizes not shown or listed.
* Laying Lengths and Total Lengths reflect unit set at midpoint of expansion capacity.
‡ Contact EBAA for sizes not listed.

## Installation Instructions for EX-TEND® 200

1. Remove protective end covers.
2. Remove polyethylene sleeve and other material.
3. Check interior, remove dirt and foreign material from interior and end connections.
4. For buried applications install polyethylene sleeve per ANSI/AWWA C105/A21.5 recommendations.
5. Assembly of flange joint:
   a. Place flange o-ring in groove.
   b. Place EX-TEND flange against adjoining flange, install and hand tighten bolts.
   c. Tighten flange bolts.
6. Install mechanical joint EX-TEND end connections using the EBAA IRON MEGALUG® Joint Restraint suitable for adjacent pipe material.

   MEGALUG 1100 should be used on ductile iron pipe.

   MEGALUG 2000PV should be used on AWWA PVC pipe.

   Assembly instructions for each of these products are included with restraint device.
7. Assembly of restrained plain end:
   a. Lubricate and install EBAA-Seal® gasket provided over plain end per ANSI/AWWA C600.
   b. Insert plain end into adjacent mechanical joint bell.
   c. Install and hand tighten t-bolts.
   d. Tighten t-bolts per AWWA recommendations.
8. Remove shipping skid.
9. Touch up exterior coating as necessary. Use coal tar epoxy following

## Important Notes

Due to hydrostatic forces that cause the EX-TEND 200 to expand, some applications may require blocking to isolate the areas of anticipated movement and to prevent this expansion from affecting adjacent piping.

The flanged outlets have dimensions according to ANSI/AWWA C110/A21.10 with each flange to ensure a proven water tight seal to a maximum of 350 PSI pressure.

Mechanical joint connections conform to the dimensional requirements of either ANSI/AWWA C110/A21.10 or ANSI/AWWA C153/A21.53 depending on the size.


# EBAA IRON Sales, Inc.

P.O. Box 857, Eastland, TX 76448

Tel: (254) 629-1731

Fax: (254) 629-8931

(800) 433-1716 within US and Canada

contact@ebaa.com

www.ebaa.com


Members of...

AMERICAN FOUNDRY SOCIETY

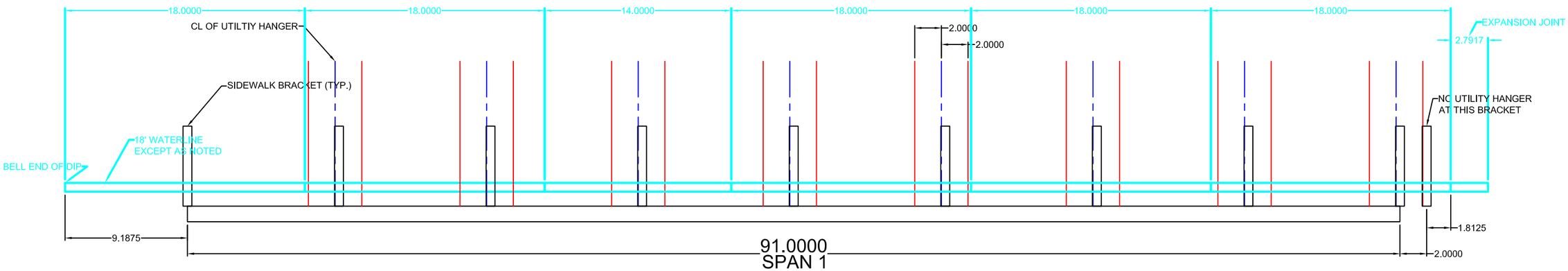


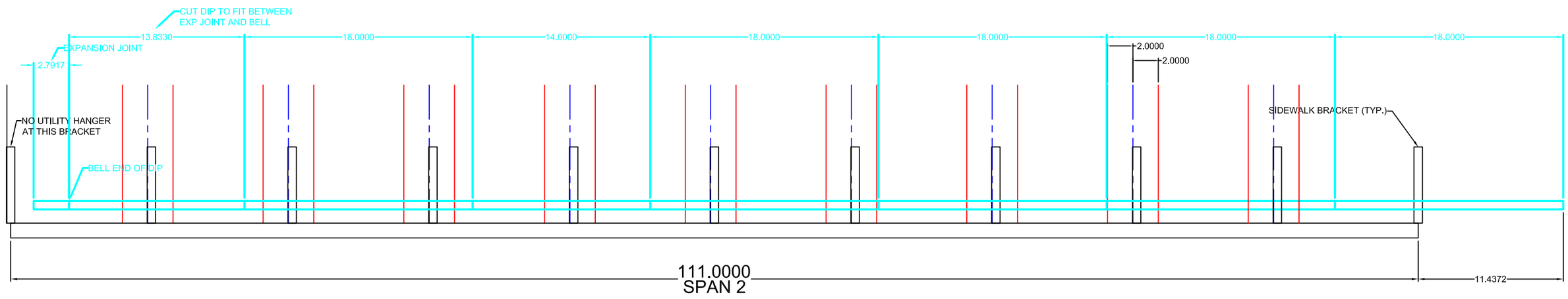


# *RIPLEY ROAD TRUSS 8 INCH WATERLINE LAYOUT*

8 INCH SEWER SIMILAR

KUBRICKY CONSTRUCTION CORP.

| REVISIONS | | | KUBRICKY CONSTRUCTION | | |
|---|---|---|---|---|---|
| NO. | DATE | BY | CONTRACT No. | | |
| 1 | | | RIPLEY ROAD<br>8 INCH UTILITY LAYOUT | | |
| 2 | | | | | |
| 3 | | | | | |
| 4 | | | DESIGNED RMP | SHEET SIZE 11" x 17" | DRAWING NO. |
| 5 | | | CHK'D MCM | DATE 10MAR16 | UL-01 |