SHOP DRAWING TRANSMITTAL

DATE RETURNED:	11/20/15	**DATE SENT:**	11/2/15	**PAGE** 1 of 1

TO/FROM: TEL. # **CHA** **III WINNERS CIRCLE** **ALBANY, NY 12205** **ATTN:**	**TO/FROM: TEL. # ( )** **MARK SARGENT** **PROJECT MANAGER - STRUCTURES** **1 NATIONAL LIFE DRIVE** **MONTPELIER, VT 05633-5001**

CHA PROJECT NO.20615
CONTRACT NO. BRF 3000(19)
TITLE: RUTLAND CITY (RIPLEY ROAD)

SHOP DRAWING DATA: (TO BE FILLED IN BY CONTRACTOR)

TOPIC: **PREFABRICATED TRUSS BRIDGE**

SPECIFICATION: **900.645**

***DO NOT** MIX SUBMISSIONS FROM DIFFERENT SPEC DIVISIONS ON THIS FORM. FILL OUT NEW FORM EACH TIME!*

FOR CHA'S RECEIVED STAMP.

THE ABOVE NAMED CONTRACTOR HAS EVALUATED EACH ITEM IDENTIFIED IN THIS TRANSMITTAL & CERTIFIES IT TO BE IN CONFORMANCE WITH THE CONTRACT DOCUMENTS.

THIS SUBMITTAL IS NOT BEING PRESENTED AS A SUBSTITUTION

CERTIFIED BY: **RYAN HENDERSON** **TITLE:** **DESIGN MANAGER** **DATE:** **11/20/15**

ID NUMBER	QUANTITY		DESCRIPTION OF ITEM(S) BEING SUBMITTED (Reference specification section and/or drawing number for each item being submitted)	ENGINEER'S REVIEW STATUS
	SENT	RETURN		
900.645-TR1			Prefabricated Truss Bridge	**MCN**

NET = NO EXCEPTIONS TAKEN **MCN** = MAKE CORRECTIONS NOTED **R&R** = REVISE AND RESUBMIT
REJ = REJECTED **SSI** = SUBMIT SPECIFIED ITEM **NR** = NOT REVIEWED
***RESUBMIT REQUIRED IF REVIEW STATUS IS R&R, REJ, SSI**

CONTRACTOR'S COMMENTS:	**Engineer's Comments: See attached comments.**

(FOR ENGINEER's INTERNAL USE ONLY)

Forwarded To:	R HENDERSON	**DUE BACK TO CONTRACTOR:**	
Reviewed By:	J NAJDOWSKI	**DATE SENT:**	11/2/15
Returned to Contractor By:	J NAJDOWSKI	**DATE RETURNED:**	11/20/15
			(ENTER DATE ABOVE)

November 20, 2015

Mr. Mark Sargent
Project Manager - Structures
1 National Life Drive
Montpelier, VT 05633-5001

RE: BRF 3000(19) Rutland City (Ripley Road); 900.645 Special Provision (Prefabricated Truss Bridge)

Mr. Sargent:

CHA has reviewed the truss design and drawings and has the following comments.

1. Sewer support as shown on Sheets T3, T4 & T6 appears too low. Verify that this detail is possible while maintaining invert elevations as shown on sheet T7 and abutment blockout details as shown on sheets 72 & 73 of 245. Revise detail if necessary.

2. A cable rail system pedestrian barrier shall be detailed with applicable VTrans and AASHTO guidelines as shown on the Typical Section on Sheet 64 of 245, to be paid for under the Truss pay item. It appears that the only mention in this submittal is on the Typical Bridge Section, sheet T3, which says "Pedestrian Barrier Per Std. Spec." Please provide details for this barrier.

3. Detail 1 on sheet T3 incorrectly shows the deck as 9". Verify that the U-bolt spacing and reinforcing steel is not affected by the increase to 10".

4. The shear connector detail on sheet T6 says that the shear connectors are to be spaced at 6", but the design calls for 5 ¼" spacing (see pdf sheet 240 of 522). Please revise the detail on sheet T6. Also, please call out the total required number of shear connectors per each floorbeam (70).

5. Casco Bay drawings have different panel points than the FST drawings, which may lead to confusion during erection. Please coordinate so that the panel points are labelled the same on all drawings as well as on shop drawings.

6. As per note 8 on sheet 65 of 245, details shall be furnished to allow for future jacking of the trusses for bearing replacements under one lane of live load, and this condition should

be checked in the design. It does not appear these were provided. Please revise and incorporate as required.

7. A number of submittals in regards to the truss and deck are still required and are noted as follows:

    a. Shop fabrication drawings must be submitted six weeks prior to beginning fabrication of the bridge as per note 17, sheet 20 of 245.

    b. Proposed method and sequence of erection as per note 5, sheet 65 of 245.

    c. Bar list and bending schedules as per Deck and Sidewalk Note 8, sheet 65 of 245.

    d. Upon substantial completion of construction, provide revised load rating calculations based upon as-built conditions as per note 6, sheet 65 of 245 and note 19, sheet 20 of 245.

If you have any questions, or require additional information, please contact us.

Sincerely,

Jeff Najdowski, P.E.
Project Engineer, CHA

/jcn
Enclosures
Cc: R. Henderson, CHA
D. Gozalkowski, CHA

V:\Projects\ANY\K2\20615\Construction\Shop_Drawings\Trusses\CHA review 11-20-15\Supplementary\BRF3000 Subm 75 (19) Truss Design CHA comments.docx

KUBRICKY CONSTRUCTION CORP.
269 BALLARD ROAD

WILTON, NY 12831
518 792-5864

KUBRICKY CONSTRUCTION CORP.
A PROUD MEMBER OF THE D.A. COLLINS™ COMPANIES

Rutland City BRF 3000 (2014036)
SUBMITTAL 75

Issued **10/22/15**
Respond by 12/01/15

To

Timothy Pockette, PE

Topic	900.645 Special Provision (Prefabricated Truss Bridge)
Status	Review for Conformance
Spec section	900.645
Responsibility	(19) Ripley Road
Received from submitter	10/20/15
Sent to approver	10/22/15
Required from approver	12/1/15

Message: Please prioritize review of the substructure elevations. We are currently on track to pour the pier first week of November.

From

Volker H.D. Burkowski

Signed by _____ Date 10/22/15

Proceed as Indicated _____ Date _____
Owner Authorized Representative

☐ NO EXCEPTION TAKEN ☒ MAKE CORRECTIONS NOTED
☐ REJECTED ☐ REVISE AND RESUBMIT
☐ SUBMIT SPECIFIED ITEM

CHECKING IS ONLY FOR THE GENERAL CONFORMANCE WITH THE DESIGN CONCEPT OF THE PROJECT AND GENERAL COMPLIANCE WITH THE INFORMATION GIVEN IN THE CONTRACT DOCUMENTS. ANY ACTION SHOWN IS SUBJECT TO THE REQUIREMENTS OF THE PLANS AND SPECIFICATIONS. CONTRACTOR IS RESPONSIBLE FOR DIMENSIONS WHICH SHALL BE CONFIRMED AND CORRELATED AT THE JOB SITE; FABRICATION PROCESSES AND TECHNIQUES OF CONSTRUCTION; COORDINATION OF HIS WORK WITH THAT OF ALL OTHER TRADES AND THE SATISFACTORY PERFORMANCE OF THE WORK.

CHA

DATE 11-20-15 BY J. NAJDOWSKI

☐ NO EXCEPTION TAKEN ☒ MAKE CORRECTIONS NOTED
☐ REJECTED ☐ REVISE AND RESUBMIT
☐ SUBMIT SPECIFIED ITEM

CHECKING IS ONLY FOR THE GENERAL CONFORMANCE WITH THE DESIGN CONCEPT OF THE PROJECT AND GENERAL COMPLIANCE WITH THE INFORMATION GIVEN IN THE CONTRACT DOCUMENTS. ANY ACTION SHOWN IS SUBJECT TO THE REQUIREMENTS OF THE PLANS AND SPECIFICATIONS. CONTRACTOR IS RESPONSIBLE FOR DIMENSIONS WHICH SHALL BE CONFIRMED AND CORRELATED AT THE JOB SITE; FABRICATION PROCESSES AND TECHNIQUES OF CONSTRUCTION; COORDINATION OF HIS WORK WITH THAT OF ALL OTHER TRADES AND THE SATISFACTORY PERFORMANCE OF THE WORK.

CHA

DATE 11-20-15 BY J. NAJDOWSKI

STATE OF VERMONT
AGENCY OF TRANSPORTATION

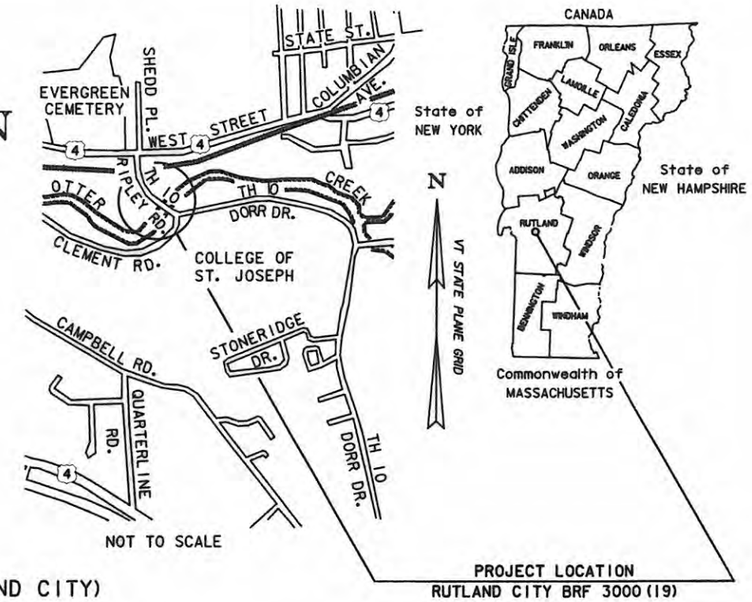

PROPOSED IMPROVEMENT
BRIDGE PROJECT
CITY OF RUTLAND
COUNTY OF RUTLAND

ROUTE NO : TH 10 (RIPLEY ROAD) (MAJOR COLLECTOR) BRIDGE NO : 17 (RUTLAND CITY)

PROJECT LOCATION: LOCATED IN THE COUNTY OF RUTLAND, CITY OF RUTLAND, TH 10 (RIPLEY ROAD) OVER THE OTTER CREEK, APPROXIMATELY 500 FEET SOUTH OF THE JUNCTION OF US BUSINESS ROUTE 4 (WEST STREET) AND TH 10 (RIPLEY ROAD) AND EXTENDING ALONG TH 10 APPROXIMATELY 975 FEET TO THE END.

PROJECT DESCRIPTION: CONSTRUCTION OF NEW STRUCTURE, EMBANKMENTS, AND SIDEWALK ON A NEW ALIGNMENT, RECONSTRUCTION OF APPROACHES AND DEMOLITION OF EXISTING STRUCTURE AND OTHER HIGHWAY RELATED ITEMS.

LENGTH OF STRUCTURE : 208.50 FEET
LENGTH OF ROADWAY : 916.50 FEET
LENGTH OF PROJECT : 1125.00 FEET

TRAFFIC DATA

2012	ADT =	2100
2032	ADT =	2200
2032	ADTT =	190
2032	DHV =	270
	T =	1.2%
	D =	61%
	V =	30 MPH

2013 ~ 2032 CUM. ESALS = 716,000
2013 ~ 2053 CUM. ESALS = 1,670,000

AGENCY REVIEW SUBMITTAL
NOT FOR CONSTRUCTION

CONSTRUCTION PLANS FOR CONTRACTOR - FURNISHED TRUSS, PEDESTRIAN RAILING AND TRUSS BEARINGS. FOR INFORMATION NOT SHOWN SEE CONTRACT DRAWINGS.

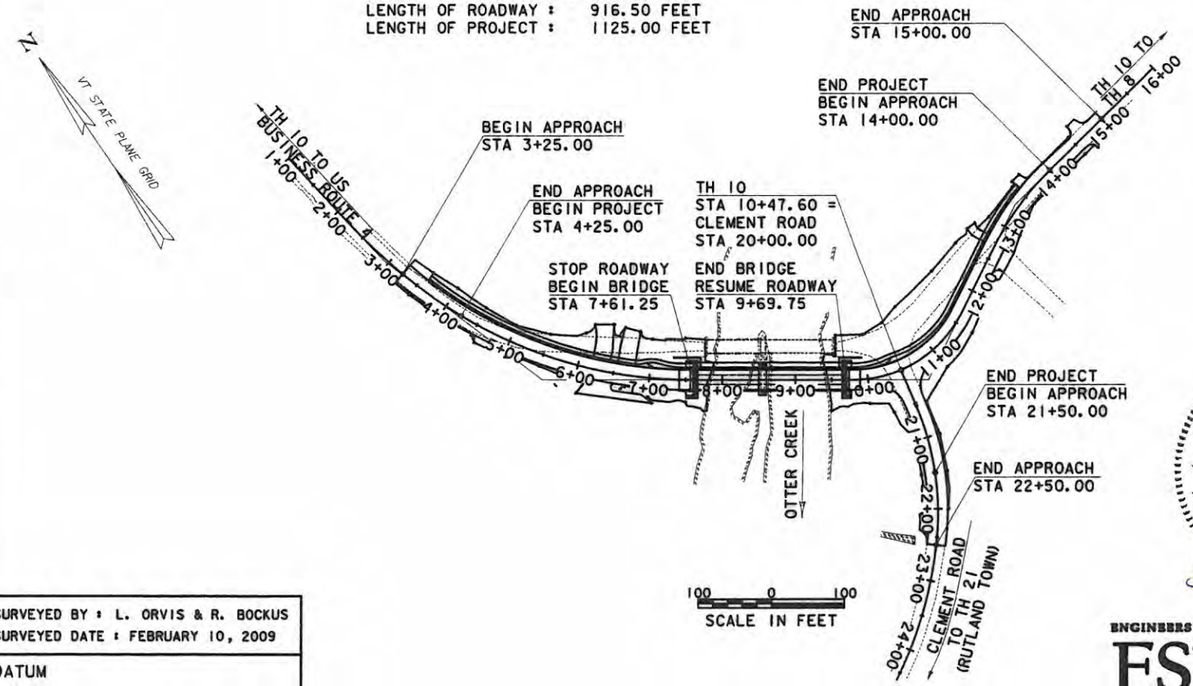

QUALITY ASSURANCE PROGRAM: LEVEL 2

CONVENTIONAL SYMBOLS

COUNTY LINE
TOWN LINE
LIMITS OF ACCESS
POINT OF ACCESS
FENCE LINE
STONE WALL
TRAVELED WAY
GUARD RAIL
RAILROAD
SURVEY LINE
CULVERT
POWER POLE
TELEPHONE POLE
TREES
OVERHEAD WIRES (AER E&T)
EXISTING SEWER LINE (S)
EXISTING WATER LINE (W)
EXISTING ROW LINE
EXISTING WETLANDS
EXISTING WATER'S EDGE
CONTROL OF ACCESS
PROPERTY LINE
R.O.W. TAKING LINE
SLOPE RIGHTS (SR)
TOP OF CUT
TOE OF SLOPE

SURVEYED BY : L. ORVIS & R. BOCKUS
SURVEYED DATE : FEBRUARY 10, 2009

DATUM
VERTICAL NAVD 88
HORIZONTAL NAD 83 (92)

STATE OF VERMONT
THOMAS A. DENSFORD
NO. 108525
STRUCTURAL
LICENSED PROFESSIONAL ENGINEER
10-15-15

CONSTRUCTION IS TO BE CARRIED ON IN ACCORDANCE WITH THESE PLANS AND THE STANDARD SPECIFICATIONS FOR CONSTRUCTION DATED 2011, AS APPROVED BY THE FEDERAL HIGHWAY ADMINISTRATION ON JULY 20, 2011 FOR USE ON THIS PROJECT, INCLUDING ALL SUBSEQUENT REVISIONS AND SUCH REVISED SPECIFICATIONS AND SPECIAL PROVISIONS AS ARE INCORPORATED IN THESE PLANS.

ENGINEERS FST Since 1914

TITLE SHEET

PROJECT NAME: RUTLAND CITY
PROJECT NUMBER: BRF 3000 (19)

FILE NAME: 018_Z08J096TITLE.DWG
PROJECT LEADER: T. DENSFORD
DESIGNED BY: T. DENSFORD
DWG. NO.:
PLOT DATE: 8/14/2015
DRAWN BY: B. LAVERGNE
CHECKED BY: M. BRASSARD
SHEET T1 OF

STRUCTURAL STEEL AND PREFABRICATED TRUSS BRIDGE NOTES:

1. ALL STRUCTURAL STEEL USED IN THE TRUSS BRIDGE SHALL MEET THE REQUIREMENTS OF AASHTO M 270M/M 270, GRADE 50.

2. THE PREFABRICATED STEEL TRUSS BRIDGE FOR THIS PROJECT SHALL MEET THE SPECIFICATION REQUIREMENTS FOR ITEM 900.645 SPECIAL PROVISION (PREFABRICATED TRUSS BRIDGE). THE TRUSS SHALL BE DESIGNED, DETAILED, FABRICATED, AND TRANSPORTED TO THE SITE AND ERECTED BY THE FABRICATOR/CONTRACTOR.

3. THE TRUSS BRIDGE TO BE PROVIDED BY THE FABRICATOR/CONTRACTOR SHALL BE SIMILAR IN GENERAL APPEARANCE AND CONFIGURATION TO THE EXISTING TRUSS BRIDGE AND THAT SHOWN IN THESE PLANS (SEE SHEET 65).

4. THE TRUSS MUST BE A PONY TRUSS WITH NO CONNECTIONS BETWEEN THE TOP CHORDS OF THE NORTH AND SOUTH TRUSSES.

5. FLOORBEAMS, STRINGERS, AND LATERAL BRACING SHALL NOT EXTEND BE1LOW THE BOTTOM CHORDS.

6. ADDITIONAL INFORMATION REGARDING THE GENERAL APPEARANCE AND CONFIGURATION OF THE TRUSS TO BE PROVIDED IS GIVEN THROUGHOUT THESE PLANS.

7. THE FABRICATOR SHALL IDENTIFY ALL TENSILE STRUCTURAL STEEL MEMBERS AND PLATES REQUIRING A CHARPY V–NOTCH TEST ON THE FABRICATION DRAWINGS BY THE INITIALS "CVN". STRUCTURAL STEEL MEMBERS DESIGNATED "CVN" IN THE FABRICATION DRAWINGS SHALL BE CHARPY V–NOTCH TESTED IN ACCORDANCE WITH SUBSECTION 714.01 OF THE STANDARD SPECIFICATIONS.

   ALL FRACTURE CRITICAL MEMBERS SHALL BE FABRICATED ACCORDING TO SECTION 12 OF THE AASHTO/AWS D1.5M/D1.5 BRIDGE WELDING CODE.

   ALL FRACTURE CRITICAL MEMBERS SHALL BE FABRICATED IN A PLANT HAVING AN AISC FRACTURE CRITICAL ENDORSEMENT OR THE FABRICATOR SHALL PROVIDE TO THE STRUCTURES ENGINEER AN ACCEPTABLE FRACTURE CONTROL PLAN MEETING THE REQUIREMENTS OF AASHTO/AWS D1.5 PRIOR TO FABRICATION.

   ALL FRACTURE CRITICAL MEMBERS SHALL BE IMPACT TESTED TO THE FRACTURE CRITICAL REQUIREMENTS AS SPECIFIED IN AASHTO M 270M/M 270.

8. ALL WELDING SHALL CONFORM TO THE PROVISIONS OF SUBSECTION 506.10.

9. ALL FASTENERS UNLESS OTHERWISE NOTED SHALL BE MADE WITH ⅞" DIAMETER ASTM DESIGNATION A–325 TYPE I (AASHTO M 164) BOLTS IN 15⁄16" DIAMETER HOLES.

10. THE FABRICATOR/CONTRACTOR SHALL USE DIRECT TENSION INDICATOR METHOD AS SPECIFIED IN SUBSECTION 506.19 FOR PRETENSIONING OF ALL BOLTED TRUSS CONNECTIONS. NO OTHER BOLT TENSIONING METHOD SHALL BE PERMITTED ON THE BOLTED TRUSS CONNECTIONS.

11. AFTER THE SUPERSTRUCTURE HAS BEEN ERECTED, BUT PRIOR TO DECK CONSTRUCTION, ELEVATIONS SHALL BE TAKEN ALONG THE TOP OF THE FLOORBEAMS AND STRINGERS, AS DIRECTED BY THE ENGINEER, FOR USE IN DETERMINING THE FINISHED GRADE.

12. ALL STEEL SHALL BE GALVANIZED ACCORDING TO SUBSECTION 726.08 OF THE STANDARD SPECIFICATIONS. PRIOR TO GALVANIZATION ALL SURFACES SHALL BE PREPARED ACCORDING TO SUBSECTION 506.14 OF THE STANDARD SPECIFICATIONS. GALVANIZING SHALL BE PAID FOR UNDER ITEM 900.645 SPECIAL PROVISION (PREFABRICATED TRUSS BRIDGE).

13. A CAST–IN–PLACE CONCRETE DECK IS ASSUMED IN THESE PLANS. IF THIS TYPE OF DECK IS PROPOSED BY THE CONTRACTOR IT SHALL BE DESIGNED COMPOSITE WITH THE FLOOR SYSTEM.

14. IF SHEAR STUDS ARE REQUIRED THEY SHALL BE APPLIED BEFORE THE TRUSS MEMBERS ARE GALVANIZED. THE COST FOR THE SHEAR STUDS SHALL BE INCIDENTAL TO ITEM 900.645 SPECIAL PROVISION (PREFABRICATED TRUSS BRIDGE).

15. ANY DAMAGE CAUSED TO GALVANIZING BEFORE ACCEPTANCE OF THE WORK SHALL BE REPAIRED AS REQUIRED BY THE SPECIFICATIONS AND THE COST SHALL BE INCIDENTAL TO ITEM 900.645 SPECIAL PROVISION (PREFABRICATED TRUSS BRIDGE).

16. THE BEARING DEVICES SHALL BE DESIGNED, DETAILED, FABRICATED, AND TRANSPORTED TO THE SITE BY THE FABRICATOR. THE BEARING DEVICES SHALL CONFORM TO THE APPLICABLE SUBSECTIONS OF SECTION 531 AND 731. EXPANSION BEARINGS SHALL BE ADJUSTED FOR TEMPERATURE AS SHOWN ON THE FABRICATION DRAWINGS. THE COSTS OF THE BEARINGS SHALL BE INCLUDED IN THE BID PRICE FOR ITEM 900.645 SPECIAL PROVISION (PREFABRICATED TRUSS BRIDGE).

17. FABRICATION DRAWINGS, DESIGN CALCULATIONS, AND WELD PROCEDURES MUST BE SUBMITTED IN ACCORDANCE WITH SUBSECTION 105.03(b) (6 WEEKS PRIOR TO BEGINNING FABRICATION OF THE TRUSS) TO THE STRUCTURES ENGINEER TO BE REVIEWED FOR CONFORMANCE. THE DESIGN CALCULATIONS FOR THE TRUSS, BEARINGS, FLOORBEAM AND STRINGER PROFILES, AND DECK SLAB SHALL BE STAMPED AND SIGNED BY A PROFESSIONAL ENGINEER. THE FABRICATION DRAWINGS SHALL INCLUDE ALL TRUSS DEAD LOAD DEFLECTION AND CAMBER INFORMATION (INCLUDING VERTICAL CURVE PROFILE FOR THE ROADWAY) INFORMATION AND SHALL BE STAMPED WITH THE DESIGN ENTITY DRAWING APPROVAL STAMP OR STAMPED AND SIGNED BY A PROFESSIONAL ENGINEER. COST INCLUDED WITH ITEM 900.645 SPECIAL PROVISION (PREFABRICATED TRUSS BRIDGE).

18. THE FABRICATOR WILL BE RESPONSIBLE FOR SUPPLYING LOAD RATING CALCULATIONS STAMPED AND SIGNED BY A PROFESSIONAL ENGINEER FOR THE NEW BRIDGE AND COMPLETING THE LOAD RATING TABLE SHOWN ON THE PRELIMINARY INFORMATION SHEET OF THE PLANS. THIS LOAD RATING MUST BE SUBMITTED WITH THE FABRICATION DRAWINGS; TRUCK CONFIGURATIONS TO BE USED IN COMPLETING THE LOAD RATING SHALL BE AS LISTED IN THE 2010 VTRANS STRUCTURES DESIGN MANUAL SECTION 15.

19. UPON SUBSTANTIAL COMPLETION OF CONSTRUCTION AND BEFORE FINAL PAYMENT FOR CONSTRUCTION THE FABRICATOR WILL PROVIDE REVISED LOAD RATING CALCULATIONS BASED ON AS–BUILT CONDITIONS STAMPED AND SIGNED BY A PROFESSIONAL ENGINEER. THE REVISED LOAD RATING SHALL FOLLOW ALL THE REQUIREMENTS GIVEN IN THE PRECEDING NOTE. COST INCLUDED WITH ITEM 900.645 SPECIAL PROVISION (PREFABRICATED TRUSS BRIDGE).

20. THE CONTRACTOR SHALL ADHERE TO ALL INSTRUCTION FROM THE TRUSS SUPPLIER REGARDING ERECTION AND FIELD CONNECTIONS.

21. THE CONTRACTOR WILL BE RESPONSIBLE FOR THE DETAILING OF THE HOPPER AND HOPPER DOWNSPOUTS FOR THE EXPANSION JOINT. COORDINATION WILL BE REQUIRED TO ENSURE AN ADEQUATE FIT OF THE HOPPER WITH THE BRIDGE EXPANSION JOINT, TRUSS BRIDGE, AND SUBSTRUCTURE BRIDGE SEAT(S). DETAILING, FABRICATION, TRANSPORTATION TO THE SITE AND INSTALLATION OF THE HOPPER AND DOWNSPOUT SHALL BE INCIDENTAL TO ITEM 516.11 BRIDGE EXPANSION JOINT, VERMONT. THE DOWNSPOUT SHALL EXTEND A MINIMUM OF 1 FT AND NOT MORE THAN 2 FT BELOW THE BRIDGE SEAT.

22. BOLT HOLES SHALL BE CLEANED OF GALVANIZATION TO RE–ESTABLISH A 15⁄16" HOLE.

23. ALL TRUSS DIAGONAL MEMBERS (EXCEPT END POST DIAGONALS), VERTICAL MEMBERS, BOTTOM CHORDS AND FLOOR BEAMS SHALL BE CONSIDERED FRACTURE–CRITICAL.

24. ALL TRUSS FLOOR BEAMS AND VERTICAL MEMBERS SHALL BE ALIGNED PERPENDICULAR TO THE PROFILE INSTANTANEOUS SLOPE. BEARING POST VERTICALS SHALL BE VERTICAL IN FINAL CONDITION.

DECK AND SIDEWALK DESIGN AND CONCRETE NOTES:

1. THE COST FOR THE DECK AND SIDEWALK SLAB CONCRETE AND DECK AND SIDEWALK SLAB REINFORCING STEEL SHALL BE PAID FOR UNDER ITEM 900.645 SPECIAL PROVISION (PREFABRICATED TRUSS BRIDGE). THE FOLLOWING NOTES SHALL APPLY TO THE DECK AND/OR SIDEWALK.

2. THE FABRICATOR/CONTRACTOR SHALL DESIGN AND DETAIL THE DECK SLAB TO MEET THE FOLLOWING DESIGN CRITERIA (DESIGN COST SHALL BE INCIDENTAL TO ITEM 900.645 SPECIAL PROVISION (PREFABRICATED TRUSS BRIDGE)):

   CONCRETE SHALL BE HIGH PERFORMANCE CLASS A CONCRETE AND SHALL MEET THE REQUIREMENTS OF SECTION 501 OF THE STANDARD SPECIFICATIONS.

   REINFORCING STEEL SHALL BE LEVEL II AND SHALL MEET THE REQUIREMENTS OF SECTION 507 OF THE STANDARD SPECIFICATIONS.

   THE MINIMUM REINFORCING STEEL SHALL BE #5 BARS SPACED 12 INCHES CENTER TO CENTER IN EACH DIRECTION AND ON EACH FACE.

   MINIMUM COVER FOR REINFORCING STEEL SHALL BE 2.5 INCHES FOR THE TOP OF CONCRETE DECK, 3 INCHES FOR CURB, AND 1.5 INCHES FOR BOTTOM OF THE CONCRETE DECK.

3. THE CONTRACTOR HAS THE OPTION TO PROVIDE AN ALTERNATE DECK TYPE THAN THAT MENTIONED ABOVE WITH PRIOR APPROVAL FROM THE ENGINEER AND VTRANS SHPO. THE CONTRACTOR IS SOLELY RESPONSIBLE FOR COORDINATING DECK TYPE WITH THE TRUSS FABRICATOR. THE PAYMENT FOR ALTERNATE DECK WILL BE INCLUDED UNDER ITEM 900.645 SPECIAL PROVISION (PREFABRICATED TRUSS BRIDGE).

4. THE CONCRETE BRIDGE CURB SHALL BE CAST–IN–PLACE HIGH PERFORMANCE CLASS A CONCRETE AS SHOWN ON THE PLANS AND PAID FOR UNDER ITEM 501.33 CONCRETE, HIGH PERFORMANCE CLASS A. THE REINFORCING STEEL FOR CONCRETE BRIDGE CURB SHALL BE LEVEL II REINFORCING STEEL, PLACED AS SHOWN ON THE PLANS AND PAID FOR UNDER ITEM 507.12 REINFORCING STEEL, LEVEL II.

5. THE FABRICATOR/CONTRACTOR SHALL PROVIDE FINAL CONCRETE BRIDGE SEAT ELEVATIONS ON THE FABRICATION DRAWINGS FOR EACH ABUTMENT BASED ON THE ACTUAL DEPTH OF THE BRIDGE AND THE HEIGHT OF THE BEARINGS.

6. CONCRETE PORTIONS OF THE ABUTMENT AND WINGWALLS ABOVE THE TOP OF FOOTING SHALL NOT BE PLACED UNTIL THE ENGINEER HAS APPROVED THE FINAL BRIDGE SEAT ELEVATIONS FOR THE TRUSS AND RELATED BRIDGE COMPONENTS.

7. NO CONCRETE IN ABUTMENTS OR WINGWALLS SHALL BE PLACED ABOVE THE BRIDGE SEAT ELEVATIONS UNTIL THE STRINGERS, FLOORBEAMS, AND SIDEWALK STRINGERS HAVE BEEN PROFILED AND THE FINISHED GRADE OF THE DECK AND SIDEWALK HAS BEEN DETERMINED.

8. THE BAR LIST AND BENDING SCHEDULES SHALL BE PREPARED BY THE VENDOR AS SPECIFIED IN SUBSECTION 507.09. PAYMENT FOR THIS WORK SHALL BE INCIDENTAL TO ITEMS 507.11 REINFORCING STEEL, LEVEL I AND 507.12 REINFORCING STEEL LEVEL II.

9. ALL SUBSTRUCTURE REINFORCING STEEL ABOVE THE BRIDGE SEAT ELEVATION, INCLUDING REINFORCING STEEL THAT EXTENDS ABOVE THE BRIDGE SEAT, SHALL BE LEVEL II REINFORCING STEEL MEETING THE REQUIREMENTS OF SECTION 507.

10. ALL SUBSTRUCTURE AND APPROACH SLAB CONCRETE SHALL BE HIGH PERFORMANCE, CLASS B.

11. CONCRETE FOR CURB ON BRIDGE SHALL BE HIGH PERFORMANCE, CLASS A

12. ALL REINFORCING ABOVE THE BRIDGE SEAT (MARK SUFFIX .2) SHALL HAVE LEVEL II CORROSION PROTECTION AND SHALL BE PAID FOR UNDER ITEM 507.12 REINFORCING STEEL, LEVEL II. ALL OTHER SUBSTRUCTURE REINFORCING SHALL BE PLAIN AND SHALL BE PAID FOR UNDER ITEM 507.11 REINFORCING STEEL, LEVEL I.

PRELIMINARY INFORMATION SHEET (BRIDGE)

PLAN SHEETS	
NO.	SHEET TITLE
T1	TITLE SHEET
T2	PROJECT NOTES SHEET
T3	DECK REINFORCING PLAN AND DETAILS
T4	BOTTOM OF SLAB ELEVATION TABLE
T5	DECK REINFORCING AND DETAILS
T6	FRAMING PLAN & DETAILS
T7	FRAMING ELEVATION & SECTION
T8	TRUSS JOINT DETAILS (1)
T9	TRUSS JOINT DETAILS (2)
T10	TRUSS JOINT DETAILS (3)
T11	TRUSS JOINT DETAILS (4)
T12	TRUSS JOINT DETAILS (5)
T13	TRUSS JOINT DETAILS (6)
T14	TRUSS JOINT DETAILS (7)
T15	TRUSS JOINT DETAILS (8)
T16	TRUSS BEARING NOTES
T17	ABUTMENT BEARING DETAILS
T18	PIER BEARING DETAILS
T19	PEDESTRIAN RAILING DETAILS 1
T20	PEDESTRIAN RAILING DETAILS 2
T21	CABLE PEDESTRIAN BARRIER DETAILS
MODIFIED PLANS	
72	ABUTMENT 1 PLAN AND DETAILS
73	ABUTMENT 2 PLAN AND DETAILS
74	WINGWALL DETAILS
75	PIER 1 PLAN AND DETAILS
STRUCTUCTAL DETAIL SHEETS	
SD–502.00	CONCRETE DETAILS AND NOTES
SD–601.00	STRUCTURAL STEEL DETAILS AND NOTES
SD–602.00	STRUCTURAL STEEL PLATE GIRDER DETAILS AND NOTES
STANDARDS LIST	
G–1	STEEL BEAM GUARDRAIL DETAILS (POST, DELINEATOR, TYPICALS)
S–367A	BRIDGE RAILING, GALVANIZED HDSB/FASCIA MOUNTED/ STEEL TUBING

DESIGN VALUES			
1.	DESIGN LIVE LOAD		HL-93
2.	FUTURE PAVEMENT	d_p:	3.0 INCH
3.	DESIGN SPAN 1	$L1$:	91.0'
	DESIGN SPAN 2	$L2$:	111.0'
4.	MIN. MID-SPAN POS. CAMBER @ RELEASE (PRESTRESSED UNITS)	Δ:	---
5.	PRESTRESSING STRAND (0.60 INCH DIAMETER - LOW RELAX)	f_y:	---
6.	PRESTRESSED CONCRETE STRENGTH	f'_c:	---
7.	PRESTRESSED CONCRETE RELEASE STRENGTH	f'_{ci}:	---
8.	CONCRETE, HIGH PERFORMANCE CLASS AA	f'_c:	---
9.	CONCRETE, HIGH PERFORMANCE CLASS A	f'_c:	4.0 KSI
10.	CONCRETE, HIGH PERFORMANCE CLASS B	f'_c:	---
11.	CONCRETE, CLASS C	f'_c:	---
12.	REINFORCING STEEL	f_y:	60 KSI
13.	STRUCTURAL STEEL AASHTO M270	f_y:	50 KSI
14.	NOMINAL BEARING RESISTANCE OF SOIL	q_n:	---
15.	SOIL BEARING RESISTANCE FACTOR (REFER TO AASHTO LRFD)	ϕ:	---
16.	NOMINAL BEARING RESISTANCE OF ROCK	q_n:	---
17.	ROCK BEARING RESISTANCE FACTOR (REFER TO AASHTO LRFD)	ϕ:	---
18.	PILE RESISTANCE FACTOR	ϕ:	---
19.	LATERAL PILE DEFLECTION	Δ:	---
20.	BASIC WIND SPEED	V_{3s}:	100 MPH
21.	MINIMUM GROUND SNOW LOAD	p_g:	---
22.	SEISMIC DATA PGA:	S_s:	---
		S_1:	---
23.			
24.			---
25.			---
26.			---

SPAN 1 AT 91'-0" **LRFR LOAD RATING FACTORS**

LOADING LEVELS	TRUCK						
	H-20	HL-93	3S2	6 AXLE	3A. STR.	4A. STR.	5A. SEMI
TONNAGE	**20**	**36**	**36**	**66**	**30**	**34.5**	**38**
INVENTORY	2.14	1.07					
POSTING							
OPERATING	2.78	1.39	1.97	1.18	1.92	1.74	1.76
COMMENTS:							

SPAN 2 AT 111'-0" **LRFR LOAD RATING FACTORS**

LOADING LEVELS	TRUCK						
	H-20	HL-93	3S2	6 AXLE	3A. STR.	4A. STR.	5A. SEMI
TONNAGE	**20**	**36**	**36**	**66**	**30**	**34.5**	**38**
INVENTORY	2.23	1.03					
POSTING							
OPERATING	2.90	1.34	1.99	1.16	1.99	1.79	1.79
COMMENTS:							

ENGINEERS FST Since 1984

PROJECT NOTES SHEET

PROJECT NAME: RUTLAND CITY
PROJECT NUMBER: BRF 3000 (19)

FILE NAME: 020_Z08J096PROJNOTES.DWG
PROJECT LEADER: T. DENSFORD
DESIGNED BY: T. DENSFORD
DWG. NO.:

PLOT DATE: 8/14/2015
DRAWN BY: B. LAVERGNE
CHECKED BY: M. BRASSARD
SHEET T2 OF

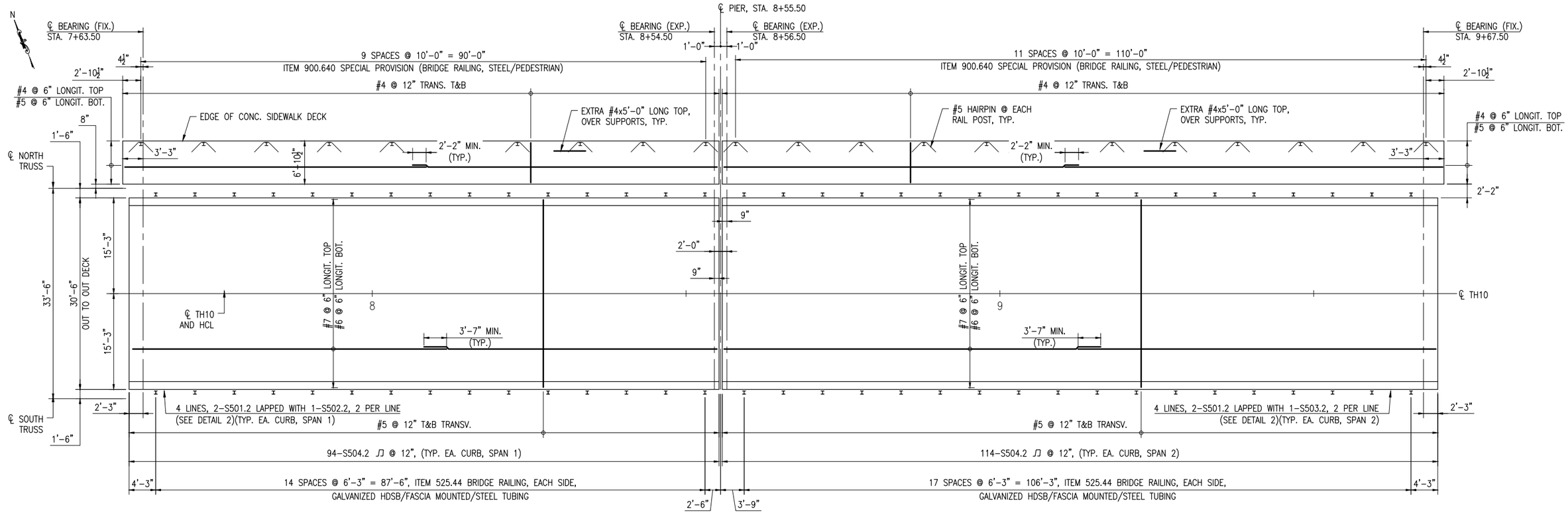

DECK REINFORCING PLAN
SCALE ⅛" = 1'-0"

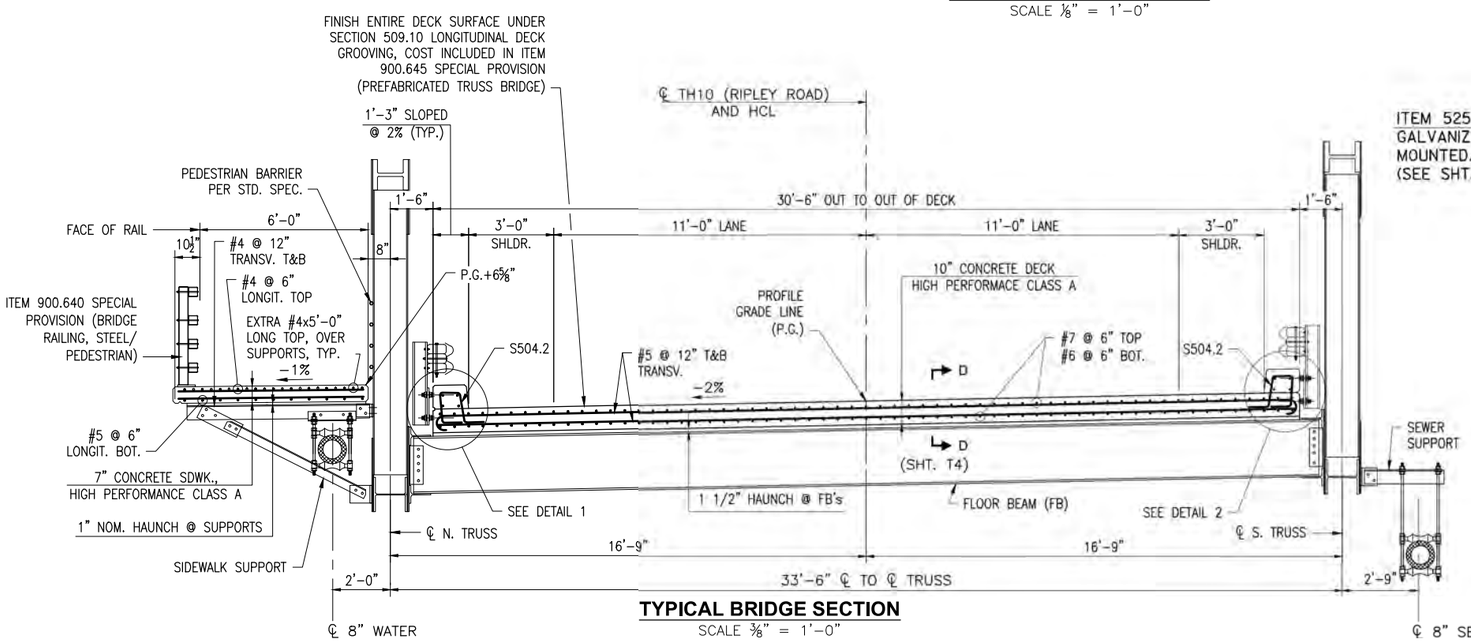

TYPICAL BRIDGE SECTION
SCALE ⅜" = 1'-0"

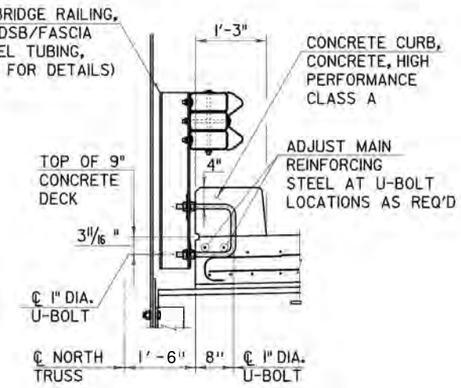

DETAIL 1
(N. FASCIA SHOWN, S. FASCIA SIMILAR)
SCALE ¾" = 1'-0"

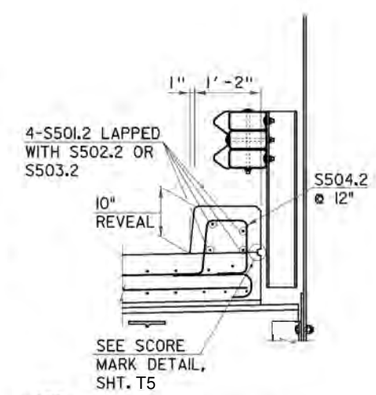

NOTE:
WORK DETAILS 1 AND 2 TOGETHER.

DETAIL 2
(S. FASCIA SHOWN, N. FASCIA SIMILAR)
SCALE ¾" = 1'-0"

ENGINEERS FST Since 1984

DECK REINFORCING PLAN AND DETAILS	PROJECT NAME: RUTLAND CITY PROJECT NUMBER: BRF 3000 (19)
FILE NAME: 061_Z08J096DECKREINFPLAN.DWG PROJECT LEADER: T. DENSFORD DESIGNED BY: T. DENSFORD DWG. NO.:	PLOT DATE: 8/14/2015 DRAWN BY: B. LAVERGNE CHECKED BY: M. BRASSARD SHEET T3 OF

Deck Slab Elevation Table (ft)

	Panel Point	L10	L11	L12	L13	L14	L13'	L12'	L11'	L10'	L20	L21	L22	L23	L24	L25	L24'	L23'	L22'	L21'	L20'
	FINISH GRADE AT P.G.L.	527.84	528.16	528.43	528.65	528.83	528.97	529.06	529.1	529.09	529.09	529.03	528.93	528.78	528.59	528.36	528.36	528.08	527.4	526.99	526.54
DECK LT. (LOW)	A THEORETICAL BOTTOM OF DECK LT. EL.	526.70	527.02	527.29	527.51	527.69	527.83	527.92	527.96	527.95	527.95	527.89	527.79	527.64	527.45	527.22	526.94	526.62	526.26	525.85	525.40
	B TOP OF FLOORBEAM LT. EL.																				
	C = A - B																				
	D CONCRETE + S.D.L. + WEARING SURF/UTIL DEFLECTION	0.00	0.05	0.10	0.13	0.14	0.13	0.10	0.05	0.00	0.00	0.09	0.17	0.24	0.28	0.30	0.28	0.24	0.17	0.09	0.00
	DEPTH OF DECK LT. HAUNCH - C + D (FT.)																				
DECK RT. (HIGH)	A THEORETICAL BOTTOM OF DECK RT. EL.	527.32	527.64	527.91	528.13	528.31	528.45	528.54	528.58	528.57	528.57	528.51	528.41	528.26	528.07	527.84	527.84	527.56	526.88	526.47	526.02
	B TOP OF FLOORBEAM RT. EL.																				
	C = A - B																				
	D CONCRETE + S.D.L. + WEARING SURF/UTIL DEFLECTION	0.00	0.05	0.10	0.13	0.14	0.13	0.10	0.05	0.00	0.00	0.09	0.17	0.24	0.28	0.30	0.28	0.24	0.17	0.09	0.00
	DEPTH OF DECK RT. HAUNCH - C + D (FT.)																				

Sidewalk Slab Elevation Table (ft)

	Panel Point	L10	L11	L12	L13	L14	L13'	L12'	L11'	L10'	L20	L21	L22	L23	L24	L25	L24'	L23'	L22'	L21'	L20'
SIDEWALK SUPPORT LT. (LOW)	A THEORETICAL BOTTOM OF SIDEWALK DECK LT. EL.	526.71	527.03	527.30	527.52	527.70	527.84	527.93	527.97	527.96	527.96	527.90	527.80	527.65	527.46	527.23	526.95	526.63	526.27	525.86	525.41
	B TOP OF SIDEWALK SUPPORT LT. EL.																				
	C = A - B																				
	D CONCRETE + S.D.L. + WEARING SURF/UTIL DEFLECTION	0.00	0.05	0.10	0.13	0.14	0.13	0.10	0.05	0.00	0.00	0.09	0.17	0.24	0.28	0.30	0.28	0.24	0.17	0.09	0.00
	DEPTH OF DECK LT. HAUNCH = C + D (FT.)																				
SIDEWALK SUPPORT LT. (HIGH)	A THEORETICAL BOTTOM OF SIDEWALK DECK RT. EL.	526.65	526.97	527.24	527.46	527.64	527.78	527.87	527.91	527.90	527.90	527.84	527.74	527.59	527.40	527.17	526.89	526.57	526.21	525.80	525.35
	B TOP OF SIDEWALK SUPPORT RT. EL.																				
	C = A - B	0.00	0.05	0.10	0.13	0.14	0.13	0.10	0.05	0.00	0.00	0.09	0.17	0.24	0.28	0.30	0.28	0.24	0.17	0.09	0.00
	D CONCRETE + S.D.L. + WEARING SURF/UTIL DEFLECTION																				
	DEPTH OF DECK LT. HAUNCH = C + D (FT.)																				

HAUNCH CONSTRUCTION NOTES:

1. THE CONTRACTOR IS NOTIFIED THAT STAY-IN-PLACE FORMWORK WILL NOT BE ALLOWED FOR CONCRETE DECK, OR SIDEWALK CONSTRUCTION.
2. THE CONTRACTOR SHALL ERECT THE PREFABRICATED PONY TRUSS AND ALL INCIDENTAL ITEMS FURNISHED UNDER ITEM 900.645 SPECIAL PROVISION (PREFABRICATED TRUSS BRIDGE). ITEM 900.645 SPECIAL PROVISION (SEWER MAIN ON BRIDGE) (8"). AND ITEM 900.645 SPECIAL PROVISION (WATER MAIN ON BRIDGE) (8") PRIOR TO PLACEMENT OF THE CONCRETE DECK, OR SIDEWALK.
3. PRIOR TO SETTING THE BOTTOM FORMWORK FOR THE CAST-IN-PLACE CONCRETE DECK. OR SIDEWALK. THE CONTRACTOR SHALL SUBMIT THE COMPLETED HAUNCH TABLES TO THE ENGINEER FOR APPROVAL.
4. DEAD LOAD DEFLECTION DIAGRAMS ARE THE RESPONSIBILITY OF THE TRUSS FABRICATOR. THE CONTRACTOR IS NOTIFIED THAT COMPLETION OF THE HAUNCH TABLES BELOW WILL REQUIRE FIELD SURVEY AND COORDINATION WITH THE TRUSS FABRICATOR TO OBTAIN THE REQUIRED THEORETICAL TRUSS DEFLECTIONS.
5. THE FRONT EDGE OF THE SIDEWALK SHALL BE OFFSET 17'-5" FROM THE ℄ HCL OF RIPLEY ROAD. THE SIDEWALK SHALL FOLLOW THE SAME VERTICAL PROFILE AS THE CONCRETE DECK. THE DIFFERENCE IN ELEVATION BETWEEN THE TOP OF SIDEWALK AT ITS FRONT EDGE (DISREGARDING THE CHAMFER) AND THE TOP OF DECK AT THE HCL SHALL BE 6⅝".

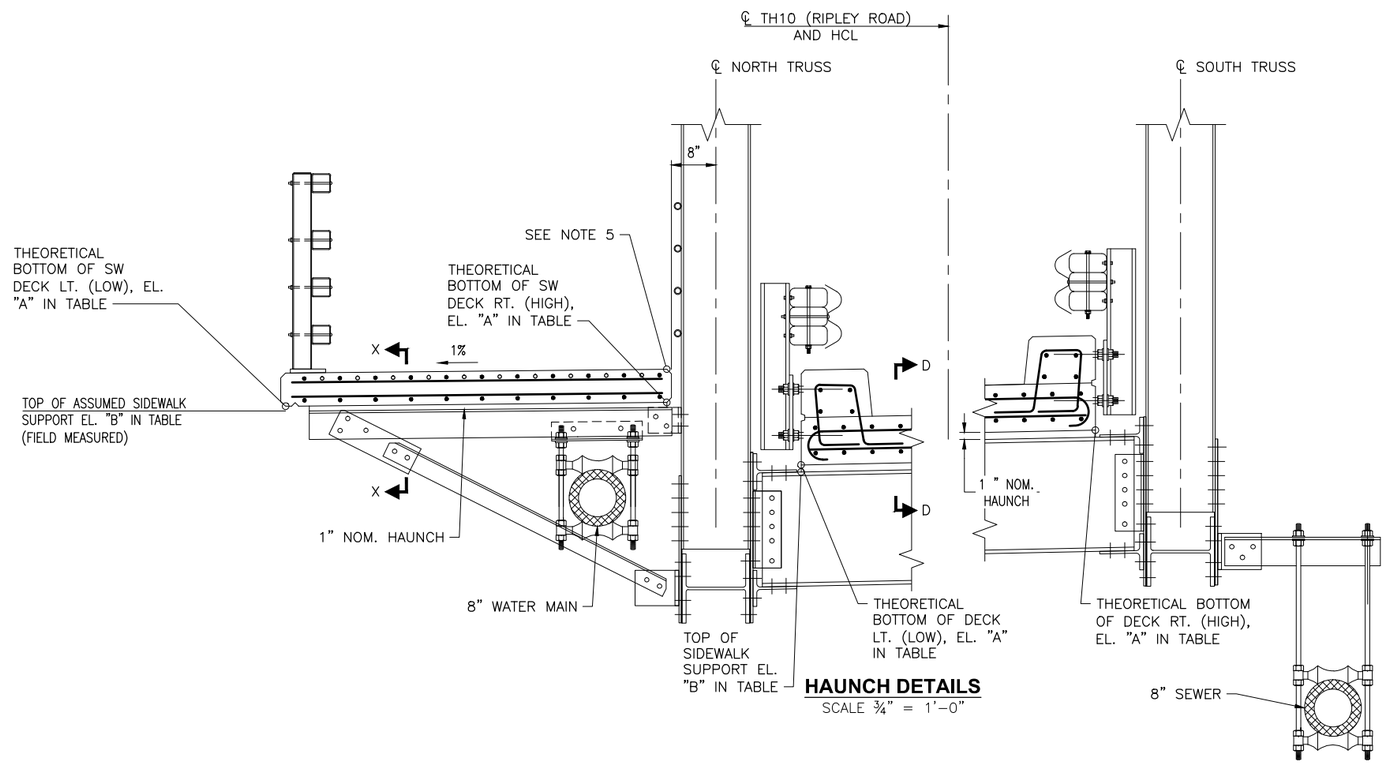

HAUNCH DETAILS
SCALE ¾" = 1'-0"

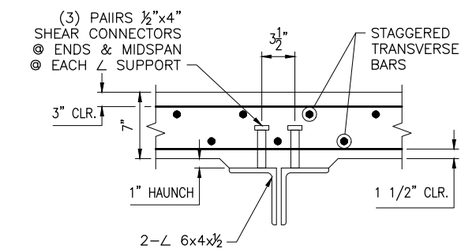

SECTION X-X
SCALE ¾" 1'-0"

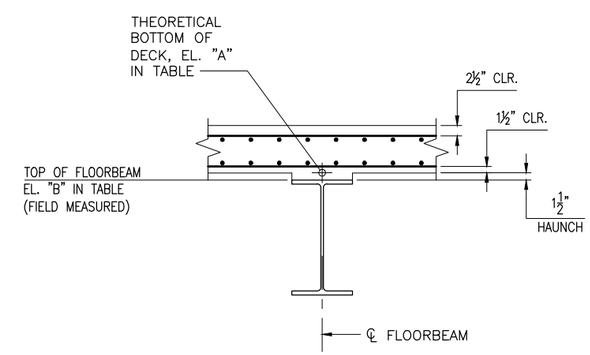

HAUNCH DETAIL AT DECK SLAB SECTION D-D
SCALE ¾" 1'-0"

ENGINEERS FST Since 1984

BOTTOM OF SLAB ELEVATION TABLE

PROJECT NAME: RUTLAND CITY
PROJECT NUMBER: BRF 3000 (19)

FILE NAME: 00E_Z08J096BOTTOMOFSLABTABLE.DWG PLOT DATE: 8/14/2015
PROJECT LEADER: T. DENSFORD DRAWN BY: B. LAVERGNE
DESIGNED BY: T. DENSFORD CHECKED BY: M. BRASSARD
DWG. NO.: SHEET T4 OF

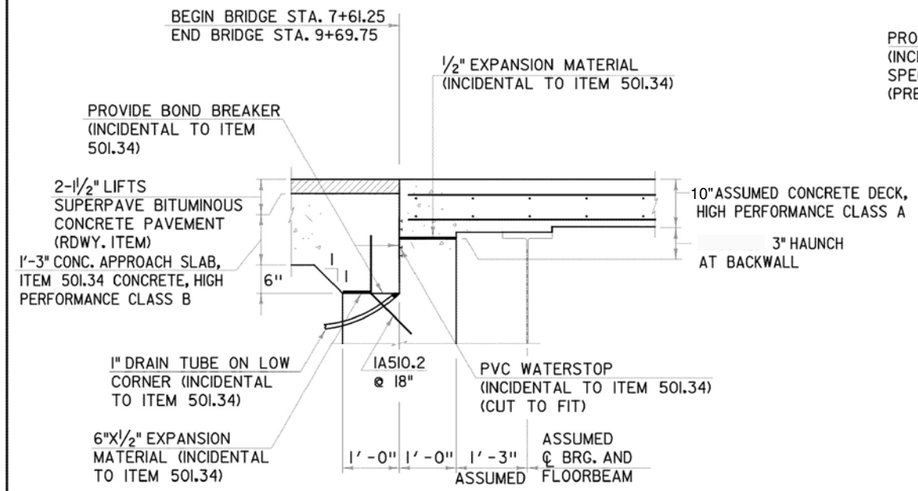

SECTION A-A

(ABUT. 1 SHOWN, ABUT. 2 SIMILAR)
SCALE 3/4" = 1'-0"

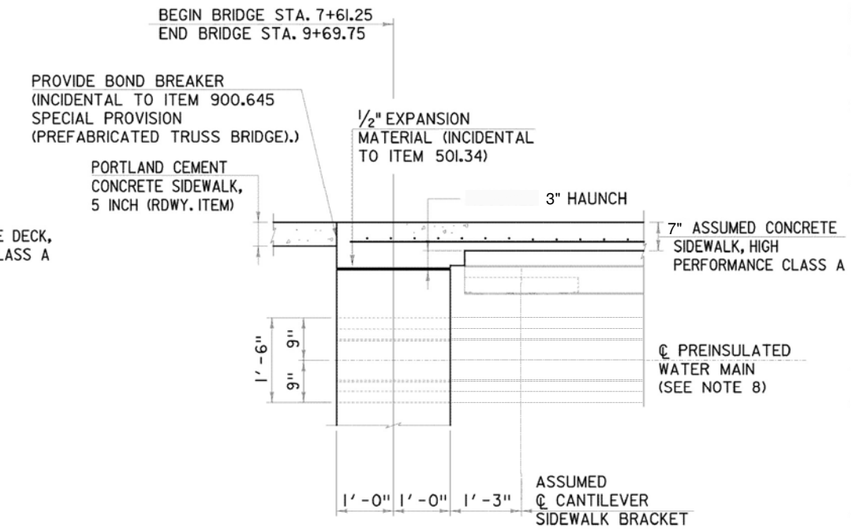

SECTION B-B

(ABUT. 2 SHOWN, ABUT. 1 SIMILAR)
SCALE 3/4" = 1'-0"

DECK NOTES:

1. THE CONTRACTOR IS NOTIFIED THAT STAY-IN-PLACE FORMWORK WILL NOT BE ALLOWED FOR CONCRETE DECK, OR SIDEWALK CONSTRUCTION.
2. WHEN CONSTRUCTING THE DECK, THE CONCRETE SHALL BE PLACED SYMMETRICALLY ABOUT THE CENTERLINE OF THIO (RIPLEY ROAD), TO THE EXTENT PRACTICAL, SO AS TO LOAD THE SUPERSTRUCTURE EQUALLY.
3. THE ENTIRE CONCRETE DECK POUR FOR EACH SPAN 1 AND SPAN 2 SHALL BE COMPLETED IN A SINGLE POUR IN EIGHT HOURS OR LESS. THE CONCRETE SHALL BE POURED FROM ONE END OF THE SPAN TO THE OTHER. IF A SPAN CANNOT BE COMPLETED IN A SINGLE POUR IN THE TIME ALLOWED, A POUR SEQUENCE SHALL BE SUBMITTED IN WRITING TO THE STRUCTURES ENGINEER FOR APPROVAL ALONG WITH CONCURRENCE FROM THE TRUSS FABRICATOR. THERE SHALL BE A MINIMUM OF 96 HOURS BETWEEN THE COMPLETION OF ONE DAY'S POUR AND THE BEGINNING OF THE ADJACENT POURS. ALL POURS SHALL START FROM THE LOWER END.
4. REQUIREMENTS OF NOTE 3 SHALL ALSO APPLY TO SIDEWALK POURS
5. A RETARDING AND A SHRINKAGE COMPENSATION ADMIXTURE, BOTH APPROVED BY THE VERMONT AGENCY OF TRANSPORTATION MATERIALS AND RESEARCH LABORATORY SHALL BE USED FOR DECK AND SIDEWALK POURS. PAYMENT FOR THE ADMIXTURES SHALL BE INCIDENTAL TO ITEM 900.645 SPECIAL PROVISION (PREFABRICATED TRUSS BRIDGE).
6. IF REQUIRED, TRANSVERSE BRIDGE DECK OR SIDEWALK CONSTRUCTION JOINTS SHALL BE FORMED BETWEEN ADJACENT POURS AS SHOWN IN THE TYPICAL CONCRETE CONSTRUCTION JOINT DETAIL.
7. ALL SUPERSTRUCTURE REINFORCING SHALL HAVE LEVEL II CORROSION PROTECTION AND PAYMENT WILL BE INCLUDED UNDER ITEM 900.645 SPECIAL PROVISION (PREFABRICATED TRUSS BRIDGE).
8. WATER MAIN AND SUPPORTS TO BE DETERMINED BY CONTRACTOR. COST INCLUDED WITH ITEM 900.645 SPECIAL PROVISION (WATER MAIN ON BRIDGE) (8"). SEE SEWER AND WATER MAIN NOTES FOR ADDITIONAL INFORMATION.

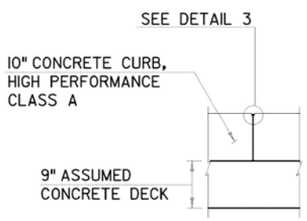

CURB JOINT DETAIL

SCALE 3/4" = 1'-0"

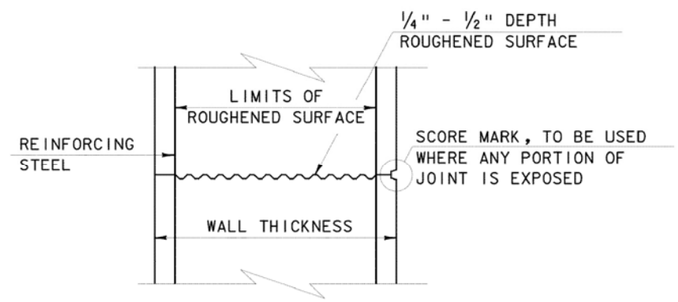

TYPICAL HORIZONTAL CONSTRUCTION JOINT

(NOT TO SCALE)

1. THE SURFACE OF THE CONCRETE CONSTRUCTION JOINTS SHALL BE CLEANED AND FREE OF LAITANCE.
2. IMMEDIATELY BEFORE NEW CONCRETE IS PLACED, ALL CONSTRUCTION JOINTS SHALL BE WETTED AND STANDING WATER REMOVED.

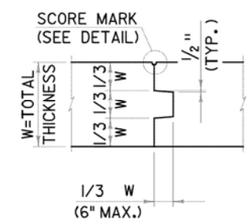

CONSTRUCTION JOINT DETAIL

SCALE 1/2" = 1'-0"

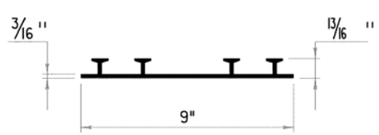

P.V.C. WATERSTOP

NOT TO SCALE

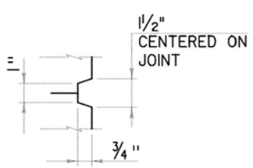

SCORE MARK DETAIL

NOT TO SCALE

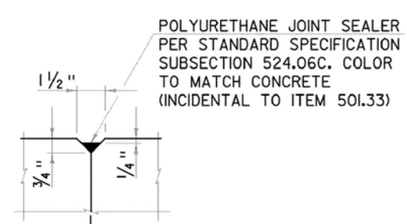

DETAIL 3

NOT TO SCALE

CHA

DECK REINFORCING DETAILS	PROJECT NAME: RUTLAND CITY PROJECT NUMBER: BRF 3000 (19)	
	PROJECT LEADER: T. DENSFORD DESIGNED BY: T. DENSFORD DWG. NO.:	PLOT DATE: 6/30/2014 DRAWN BY: B. LAVERGNE CHECKED BY: M. BRASSARD SHEET T5 OF

FILE NAME = V:\Projects\ANY\K2\20615\CADD\MSTN\08_096\consultants\z08_096deck-details.dgn
DATE/TIME = 6/30/2014
USER = 4916

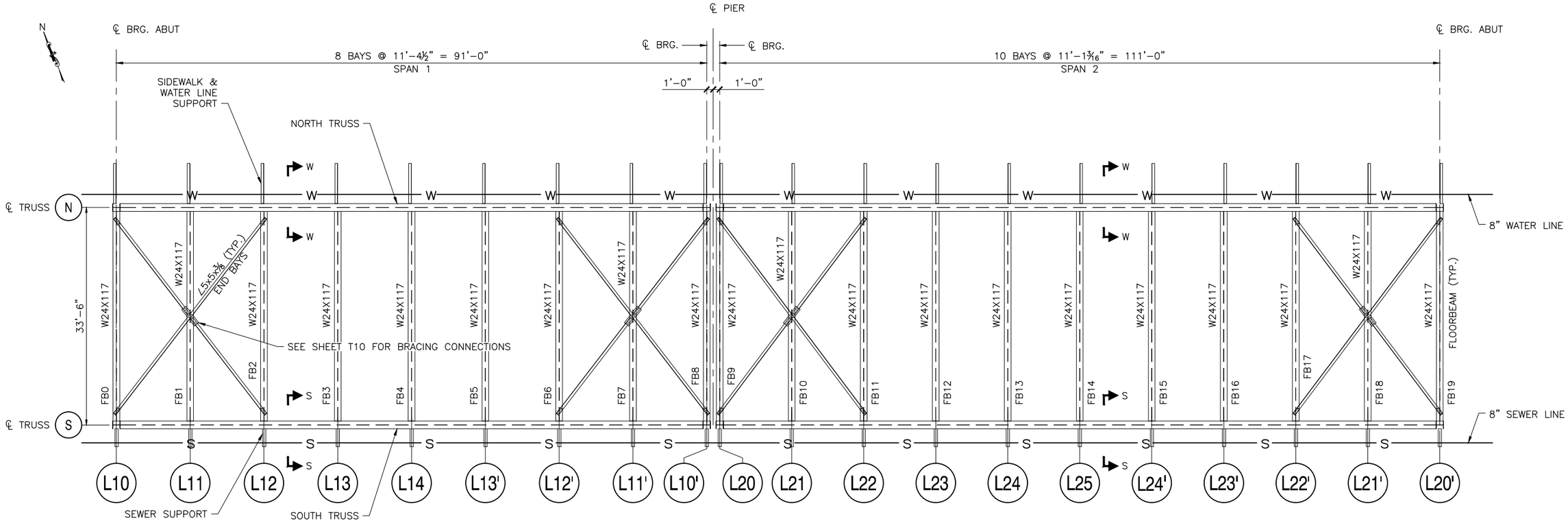

FRAMING PLAN
SCALE ⅛" = 1'-0"

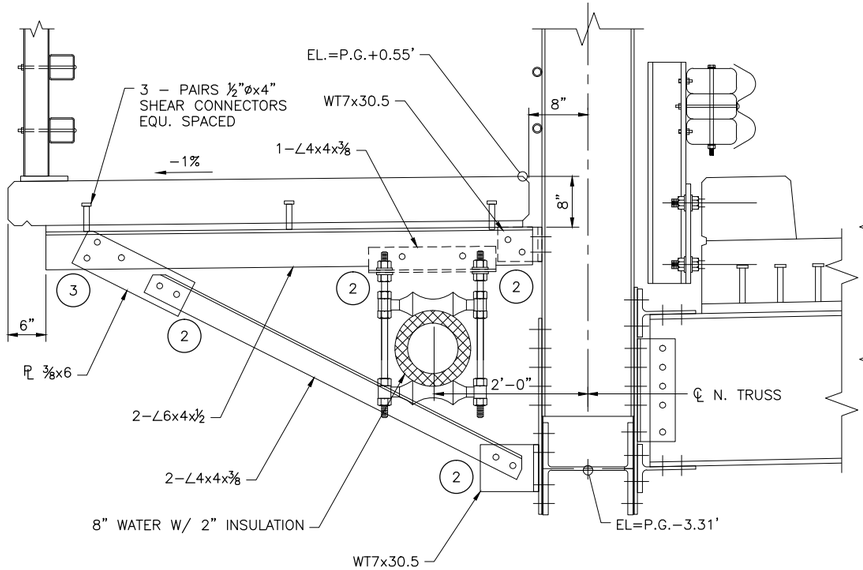

SIDEWALK & WATER SUPPORT - SECTION W-W
SCALE 1" = 1'-0"

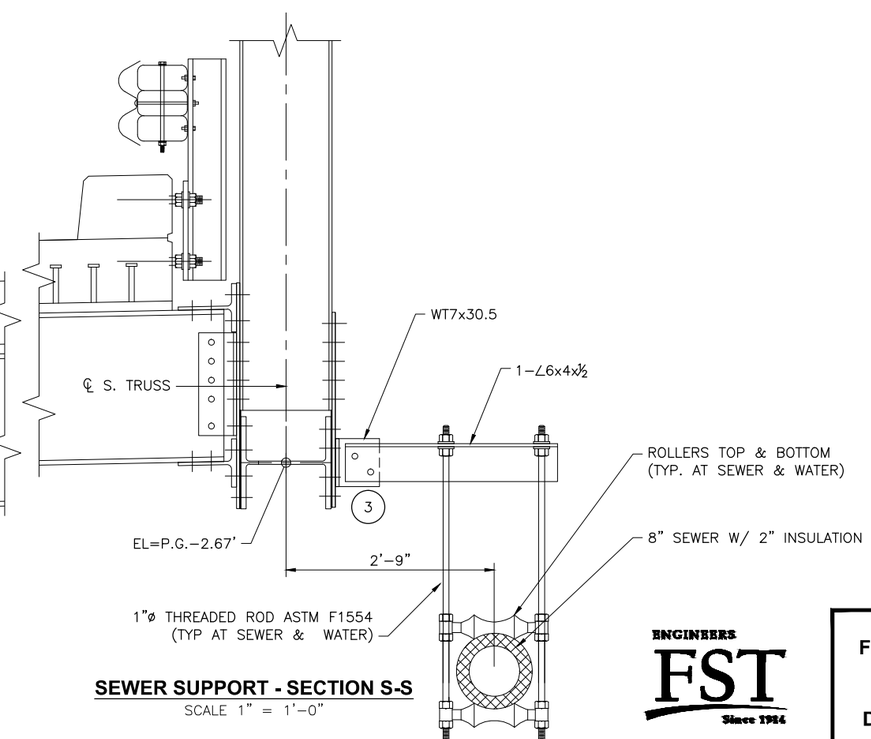

SEWER SUPPORT - SECTION S-S
SCALE 1" = 1'-0"

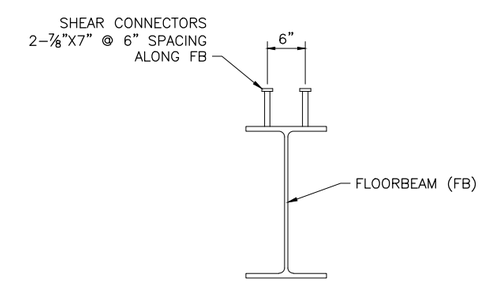

SHEAR CONNECTOR DETAILS
SCALE 1" = 1'-0"

ENGINEERS FST Since 1914

FRAMING PLAN & DETAILS

PROJECT NAME: RUTLAND CITY	
PROJECT NUMBER: BRF 3000 (19)	
FILE NAME: 064_Z08J096FRAMINGPLAN_NEW.DWG	PLOT DATE: 8/14/2015
PROJECT LEADER: T. DENSFORD	DRAWN BY: B. LAVERGNE
DESIGNED BY: T. DENSFORD	CHECKED BY: M. BRASSARD
DWG. NO.:	SHEET T6 OF

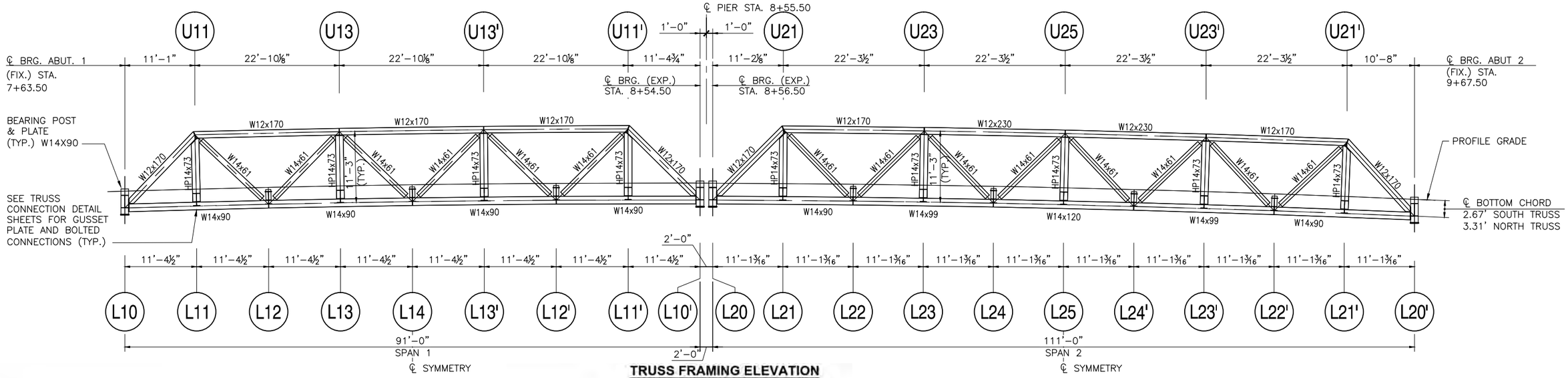

TRUSS FRAMING ELEVATION

SCALE ⅛" = 1'-0"

North Truss Camber (in)

Panel Point	L10	L11	L12	L13	L14	L13'	L12'	L11'	L10'	L20	L21	L22	L23	L24	L25	L24'	L23'	L22'	L21'	L20'
Concrete Deflection	0.00	0.17	0.32	0.43	0.46	0.43	0.32	0.17	0.00	0.00	0.24	0.48	0.67	0.77	0.82	0.77	0.67	0.48	0.24	0.00
Superimposed Dead Load Deflection	0.00	0.14	0.27	0.36	0.38	0.36	0.27	0.14	0.00	0.00	0.14	0.26	0.37	0.42	0.45	0.42	0.37	0.26	0.14	0.00
Future Wearing Surface & Utility Deflection	0.00	0.04	0.07	0.10	0.11	0.10	0.07	0.04	0.00	0.00	0.06	0.12	0.17	0.19	0.20	0.19	0.17	0.12	0.06	0.00
Steel Deflection	0.00	0.05	0.10	0.14	0.14	0.14	0.10	0.05	0.00	0.00	0.09	0.17	0.24	0.28	0.30	0.28	0.24	0.17	0.09	0.00
Vertical Curve Ordinate	0.00	1.94	3.33	4.16	4.44	4.16	3.33	1.94	0.00	0.00	2.38	4.22	5.54	6.34	6.60	6.34	5.54	4.22	2.38	0.00
Total Camber	**0.00**	**2.34**	**4.09**	**5.20**	**5.53**	**5.20**	**4.09**	**2.34**	**0.00**	**0.00**	**2.91**	**5.26**	**7.00**	**7.99**	**8.36**	**7.99**	**7.00**	**5.26**	**2.91**	**0.00**

South Truss Camber (in)

Panel Point	L10	L11	L12	L13	L14	L13'	L12'	L11'	L10'	L20	L21	L22	L23	L24	L25	L24'	L23'	L22'	L21'	L20'
Concrete Deflection	0.00	0.17	0.32	0.43	0.46	0.43	0.32	0.17	0.00	0.00	0.24	0.48	0.67	0.77	0.82	0.77	0.67	0.48	0.24	0.00
Superimposed Dead Load Deflection	0.00	0.01	0.02	0.02	0.03	0.02	0.02	0.01	0.00	0.00	0.02	0.04	0.06	0.07	0.07	0.07	0.06	0.04	0.02	0.00
Future Wearing Surface & Utility Deflection	0.00	0.04	0.07	0.10	0.11	0.10	0.07	0.04	0.00	0.00	0.06	0.12	0.17	0.19	0.20	0.19	0.17	0.12	0.06	0.00
Steel Deflection	0.00	0.05	0.10	0.14	0.14	0.14	0.10	0.05	0.00	0.00	0.09	0.17	0.24	0.27	0.29	0.27	0.24	0.17	0.09	0.00
Vertical Curve Ordinate	0.00	1.94	3.33	4.16	4.44	4.16	3.33	1.94	0.00	0.00	2.38	4.22	5.54	6.34	6.60	6.34	5.54	4.22	2.38	0.00
Total Camber	**0.00**	**2.21**	**3.84**	**4.85**	**5.17**	**4.85**	**3.84**	**2.21**	**0.00**	**0.00**	**2.79**	**5.03**	**6.68**	**7.64**	**7.98**	**7.64**	**6.68**	**5.03**	**2.79**	**0.00**

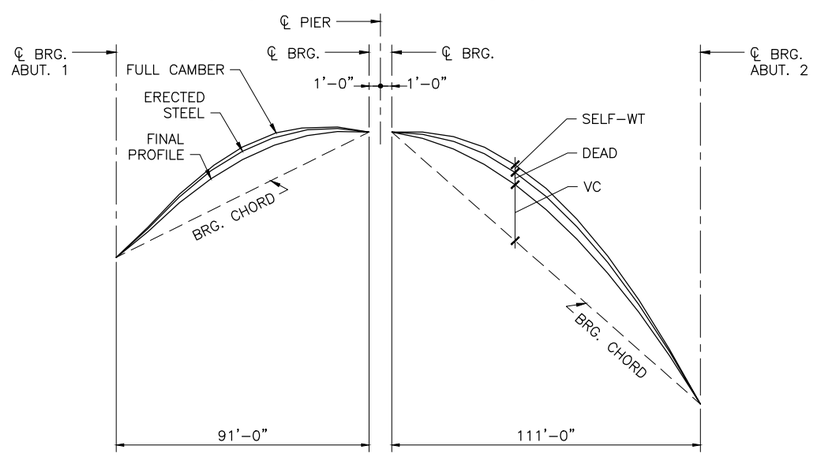

TRUSS CAMBER DIAGRAM

NOT TO SCALE

SEWER AND WATER MAIN NOTES:

1. SEWER AND WATER MAIN NOMINAL PIPE SIZE IS 8", HOWEVER, BOTH ARE PREINSULATED WITH 2" THICK INSULATION. CANTILEVER SIDEWALK BRACKET DETAILING AND ALL PIPE HARDWARE SHALL BE CAPABLE OF ACCOMMODATING A 14" MINIMUM FINISHED PIPE DIAMETER.

2. THE CONTRACTOR IS NOTIFIED THAT THE EXISTING SANITARY SEWER SYSTEM WHICH SERVICES TH10 (RIPLEY ROAD) IS A GRAVITY SYSTEM. INVERT ELEVATIONS ALONG THE SPAN ARE CRITICAL AND SHALL BE ESTABLISHED AS SHOWN IN THE FOLLOWING TABLE. IT SHOULD BE NOTED THAT ELEVATIONS SHOWN ARE FINAL (AFTER ALL DEAD LOAD DEFLECTIONS HAVE OCCURRED).

SEWER MAIN INVERT EL. TABLE

SPAN 1	FB0	522.80	SPAN 2	FB9	522.52
	FB1	522.77		FB10	522.49
	FB2	522.73		FB11	522.45
	FB3	522.70		FB12	522.42
	FB4	522.66		FB13	522.39
	FB5	522.63		FB14	522.35
	FB6	522.60		FB15	522.32
	FB7	522.58		FB16	522.29
	FB8	522.53		FB17	522.25
				FB18	522.22
				FB19	522.19

CAMBER NOTES:

1. THE TRUSS FABRICATOR IS NOTIFIED THAT IN ADDITION TO CAMBER, SELECT DEAD LOAD DEFLECTION VALUES WILL BE REQUIRED FOR HAUNCH CONSTRUCTION, SEE SHT. T4 FOR DETAIL.

2. TH10 (RIPLEY ROAD) IS ALIGNED ON A CREST VERTICAL CURVE, AS SHOWN ON SHT. 38. VERTICAL CURVE ORDINATES SHOWN ARE REPORTED RELATIVE TO A REFERENCE LINE DRAWN BETWEEN FINISHED GRADE ELEVATIONS AT THE SUBSTRUCTURE UNITS FOR EACH SPAN.

   VERTICAL CURVE DATA:

   PVI STATION = 8+65.80
   PVI ELEVATION = 531.01
   VC LENGTH = 210.00'
   GRADE IN: +3.1000%
   GRADE OUT: −4.3982%

ENGINEERS FST Since 1984

FRAMING ELEVATION & SECTION

PROJECT NAME: RUTLAND CITY
PROJECT NUMBER: BRF 3000 (19)

FILE NAME: 064_Z08J096FRAMINGPLAN_NEW.DWG
PROJECT LEADER: T. DENSFORD
DESIGNED BY: T. DENSFORD
DWG. NO.:

PLOT DATE: 8/14/2015
DRAWN BY: B. LAVERGNE
CHECKED BY: M. BRASSARD
SHEET T7 OF

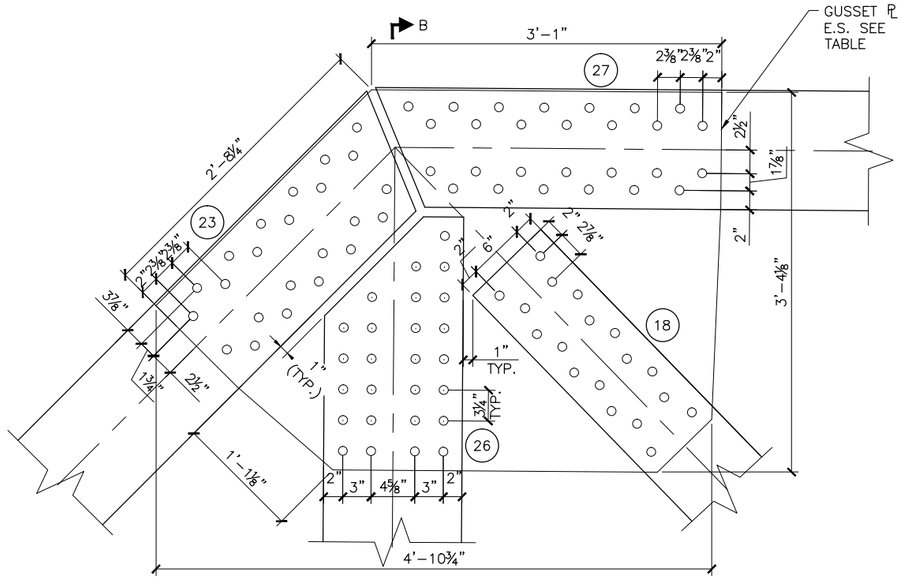

JOINTS U11, U21

SCALE: 1½" = 1'-0"

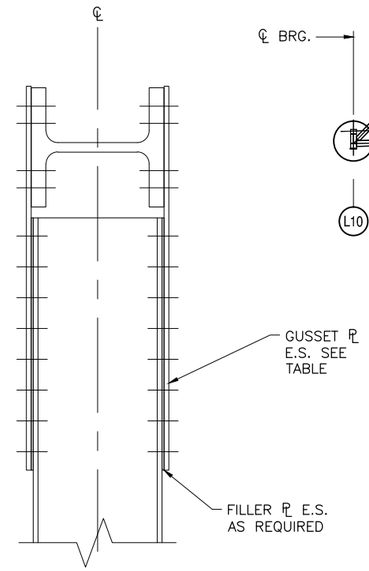

SECTION B-B

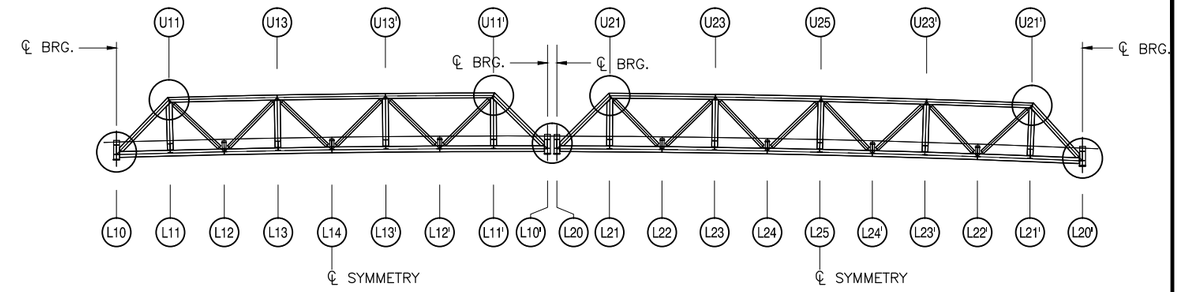

KEY ELEVATION

NOT TO SCALE

NOTES:

1. SEE SHEET T2 FOR NOTES.
2. (#) NUMBER OF BOLTS SHOWN ON VIEW.
3. SEE SHEET T9 FOR PLATE THICKNESS TABLE.

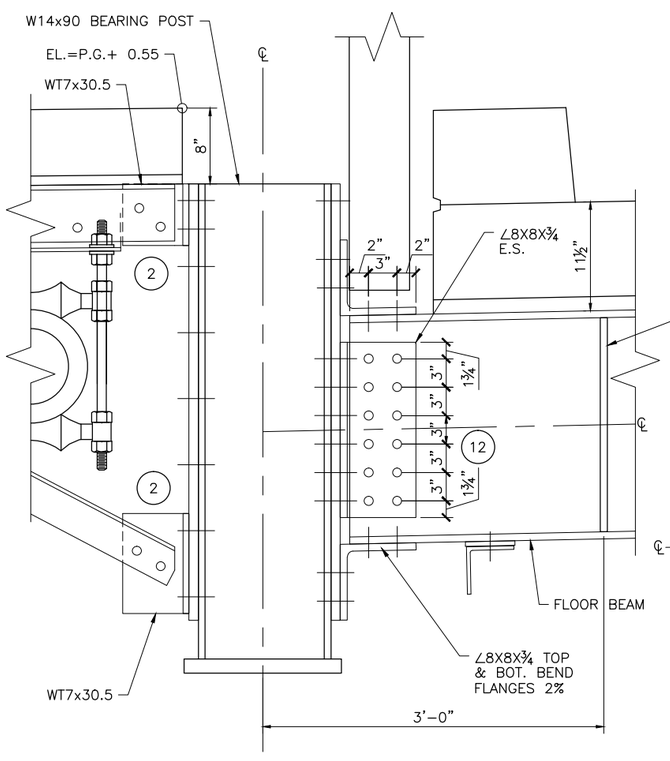

CONNECTIONS L10, L20 - SECTION A-A LEFT

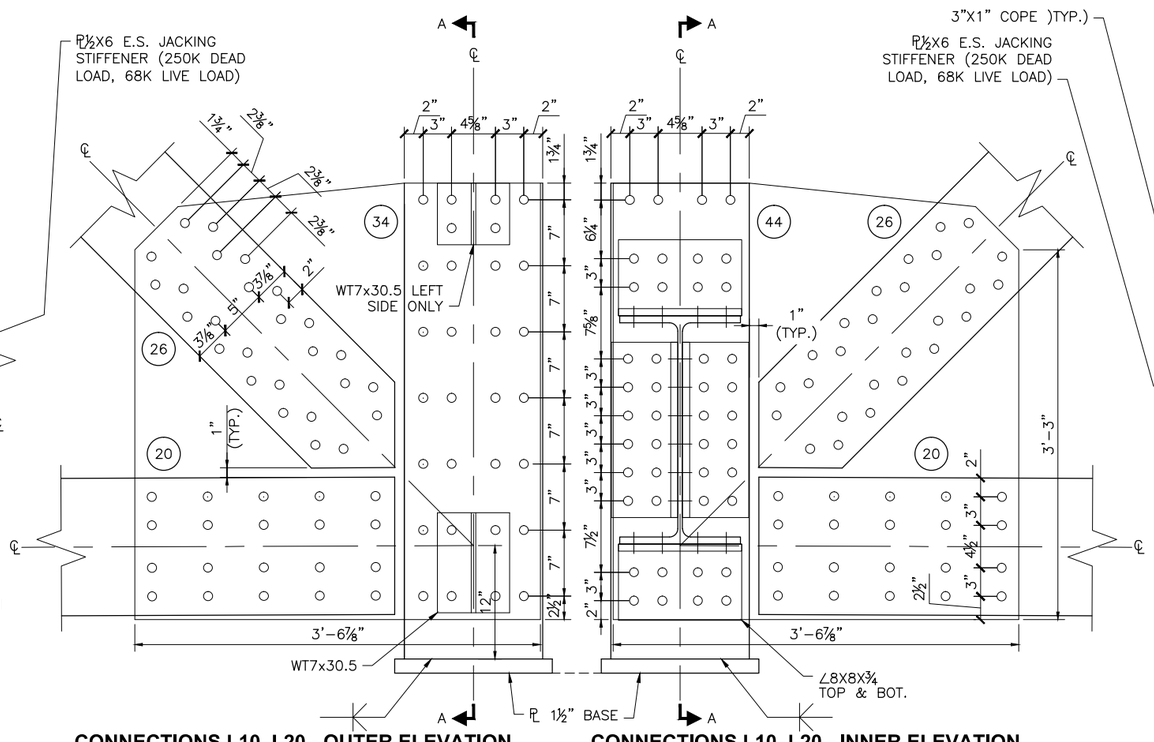

CONNECTIONS L10, L20 - OUTER ELEVATION

CONNECTIONS L10, L20 - INNER ELEVATION

JOINTS L10, L20

SCALE: 1½" = 1'-0"

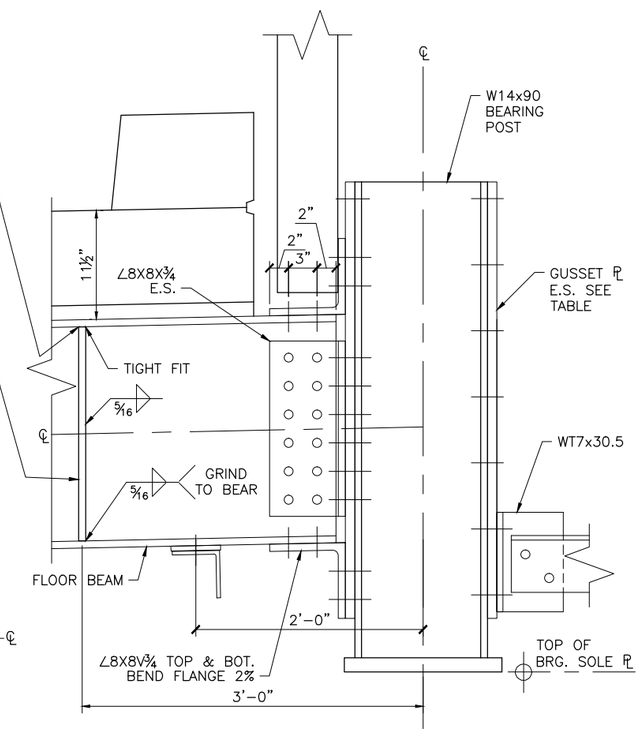

CONNECTIONS L10, L20 - SECTION A-A RIGHT

ENGINEERS FST Since 1984

TRUSS JOINT DETAILS (1)

PROJECT NAME: RUTLAND CITY	
PROJECT NUMBER: BRF 3000 (19)	
FILE NAME: 064_Z08J096FRAMINGPLAN_NEW.DWG	PLOT DATE: 8/14/2015
PROJECT LEADER: T. DENSFORD	DRAWN BY: B. LAVERGNE
DESIGNED BY: T. DENSFORD	CHECKED BY: M. BRASSARD
DWG. NO.:	SHEET T8 OF

PLATE THICKNESSES		
JOINT NO.	GUSSET PL THICKNESS	CHORD PL THICKNESS
L10, L20	1" ALL	NONE
L11, L13, L21, L23, L25	¾" ALL	NONE
L12, L14	1¼" ALL	NONE
L22, L24	1½", 1¾"	NONE
U11,U21	1¼" ALL	NONE
U13	¾"	¾"
U23	¾"	¾"
U25	¾"	1"

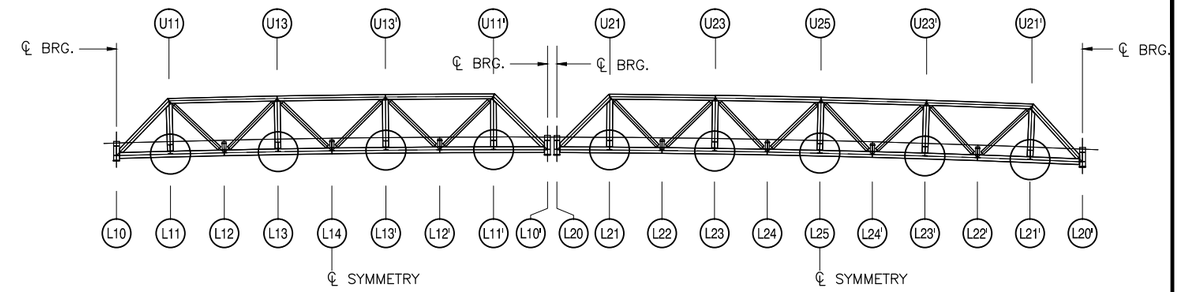

KEY ELEVATION
NOT TO SCALE

NOTES:

1. SEE SHEET T2 FOR NOTES.
2. (#) NUMBER OF BOLTS SHOWN ON VIEW.
3. SEE SHEET T9 FOR PLATE THICKNESS TABLE.

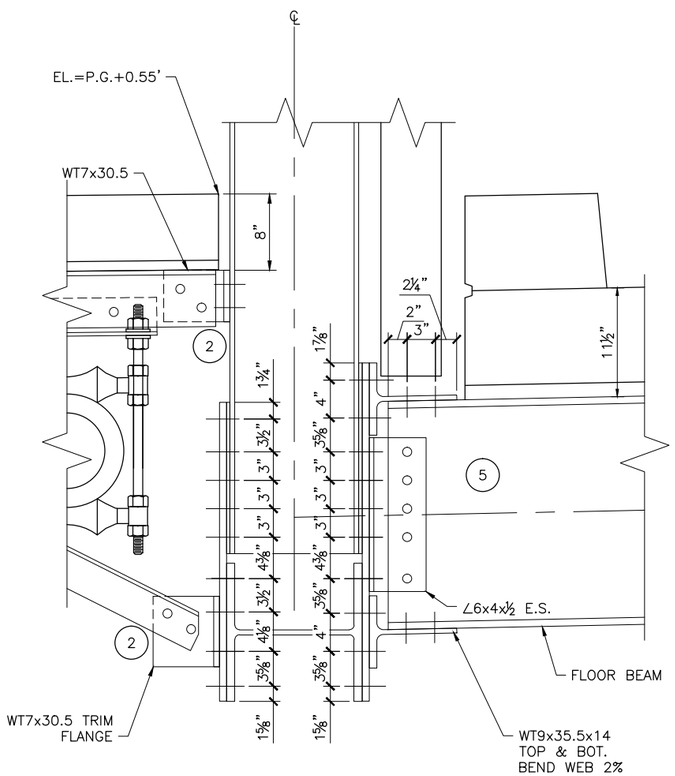

CONNECTIONS L11, L13, L21, L23, L25 - SECTION C-C LEFT

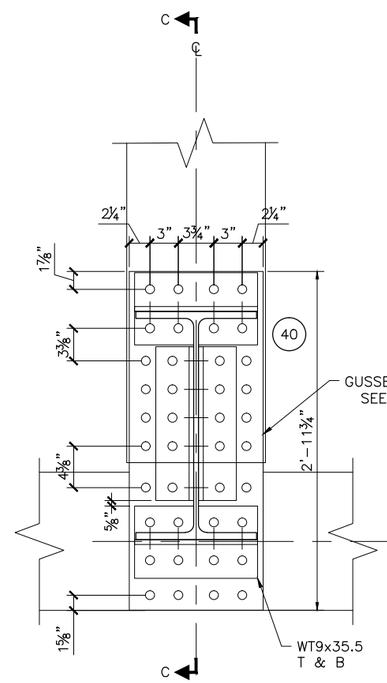

CONNECTIONS L11, L13, L21, L23, L25 INNER ELEVATION

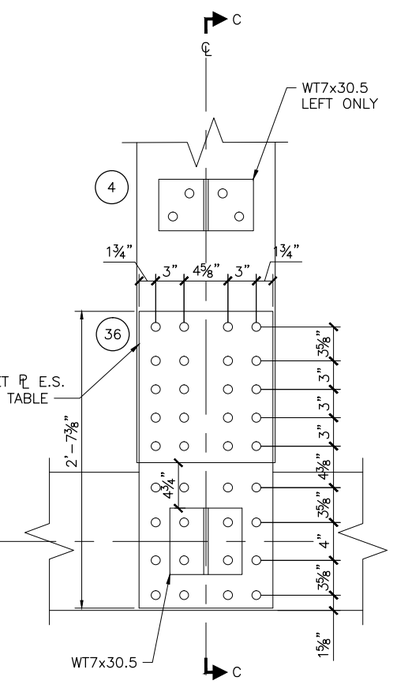

CONNECTIONS L11, L13, L21, L23, L25 OUTER ELEVATION

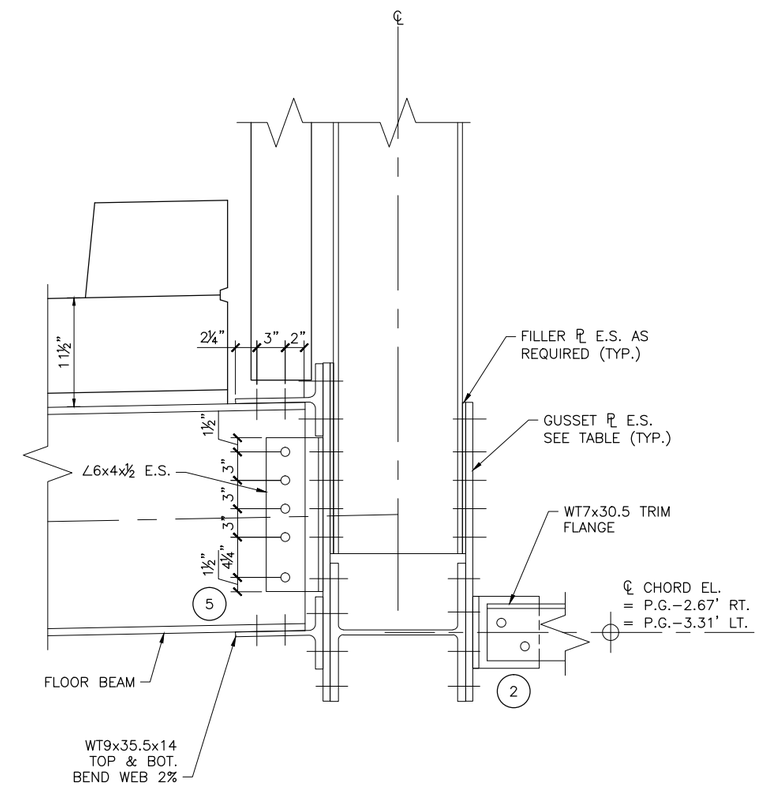

CONNECTIONS L11, L13, L21, L23, L25 - SECTION C-C RIGHT

JOINTS L11, L13, L21, L23, L25
SCALE: 1½" = 1'-0"

ENGINEERS FST Since 1984

TRUSS JOINT DETAILS (2)

PROJECT NAME: RUTLAND CITY
PROJECT NUMBER: BRF 3000 (19)

FILE NAME: 064_Z08J096FRAMINGPLAN_NEW.DWG
PROJECT LEADER: T. DENSFORD
DESIGNED BY: T. DENSFORD
DWG. NO.:
PLOT DATE: 8/14/2015
DRAWN BY: B. LAVERGNE
CHECKED BY: M. BRASSARD
SHEET T9 OF

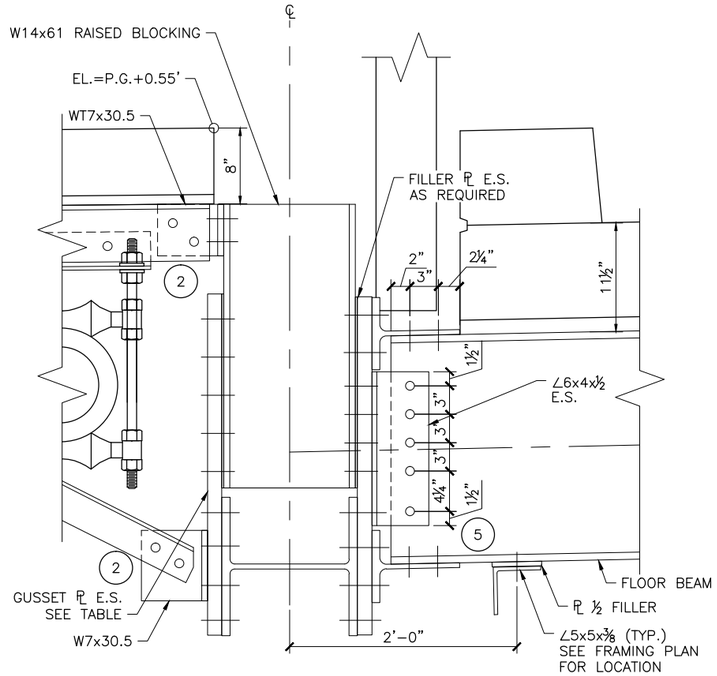

CONNECTIONS L12, L14 - SECTION D-D LEFT

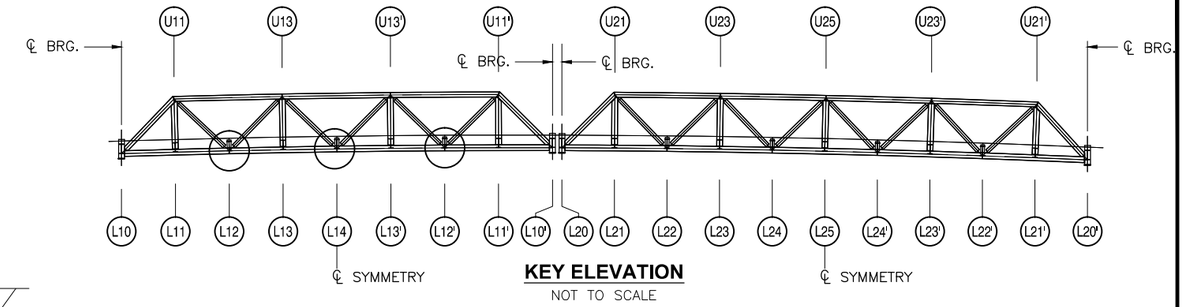

KEY ELEVATION

NOT TO SCALE

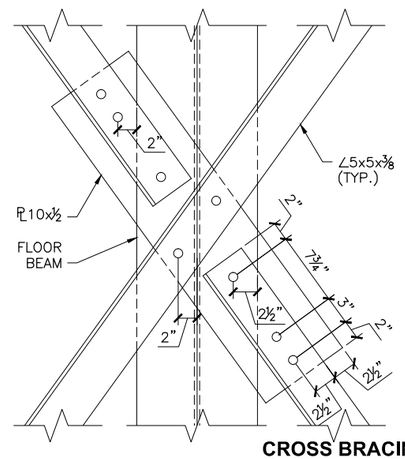

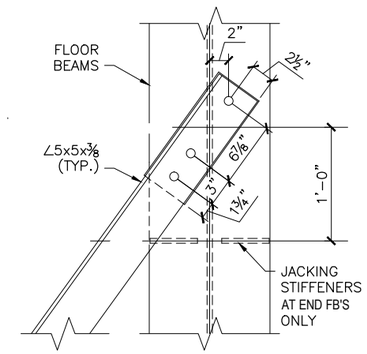

CROSS BRACING DETAILS AT BOTTOM OF FB'S

SCALE: 1½" = 1'-0"

NOTES:

1. SEE SHEET T2 FOR NOTES.
2. (#) NUMBER OF BOLTS SHOWN ON VIEW.
3. SEE SHEET T9 FOR PLATE THICKNESS TABLE.

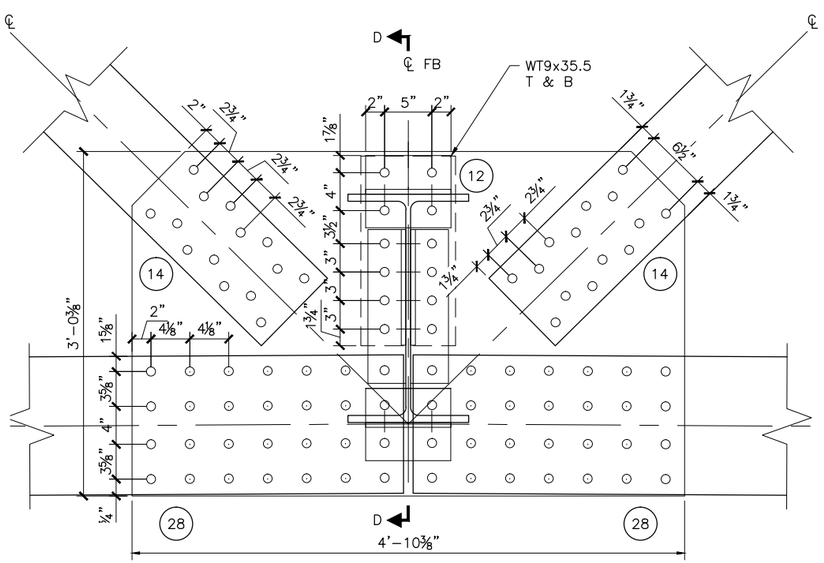

CONNECTIONS L12, L14 - INNER ELEVATION

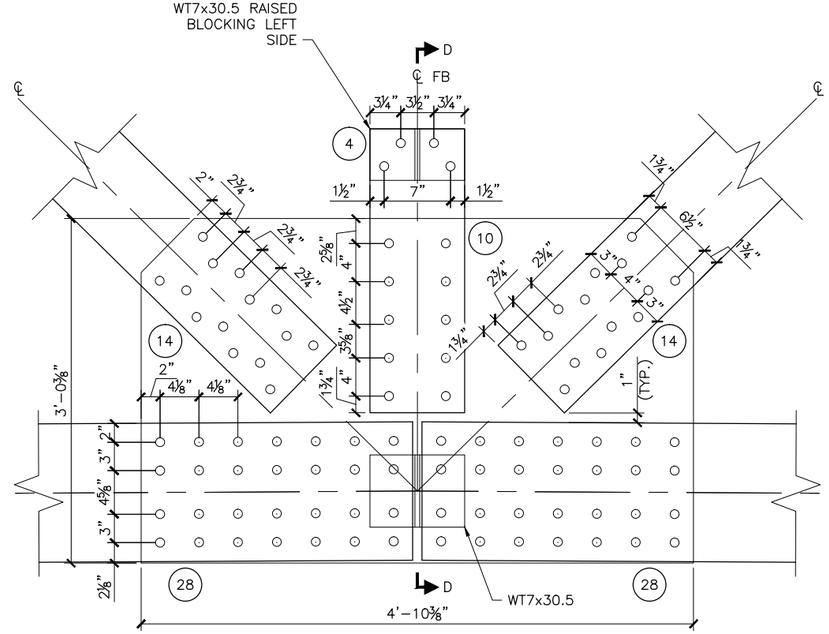

CONNECTIONS L12, L14 - OUTER ELEVATION

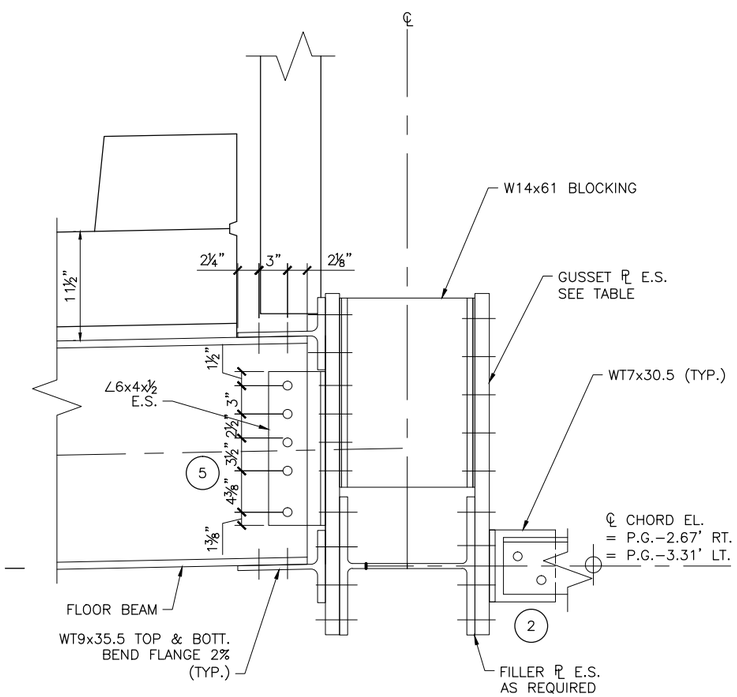

CONNECTIONS L12, L14 - SECTION D-D RIGHT

JOINTS L12, L14

SCALE: 1½" = 1'-0"

ENGINEERS FST Since 1984

TRUSS JOINT DETAILS (3)	PROJECT NAME: RUTLAND CITY PROJECT NUMBER: BRF 3000 (19)
	FILE NAME: 064_Z08J096FRAMINGPLAN_NEW.DWG PROJECT LEADER: T. DENSFORD DESIGNED BY: T. DENSFORD DWG. NO.:
	PLOT DATE: 8/14/2015 DRAWN BY: B. LAVERGNE CHECKED BY: M. BRASSARD SHEET T10 OF

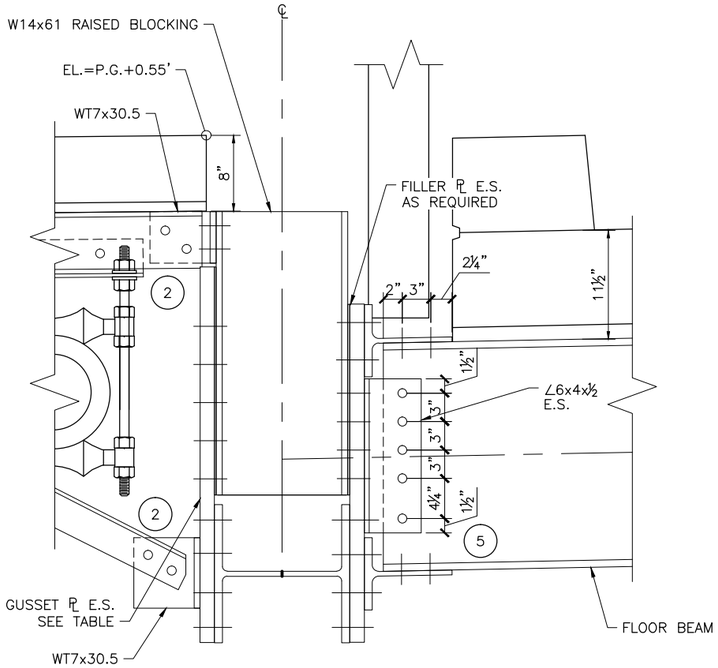

CONNECTION L22 - SECTION E-E LEFT

SCALE: 1½" = 1'-0"

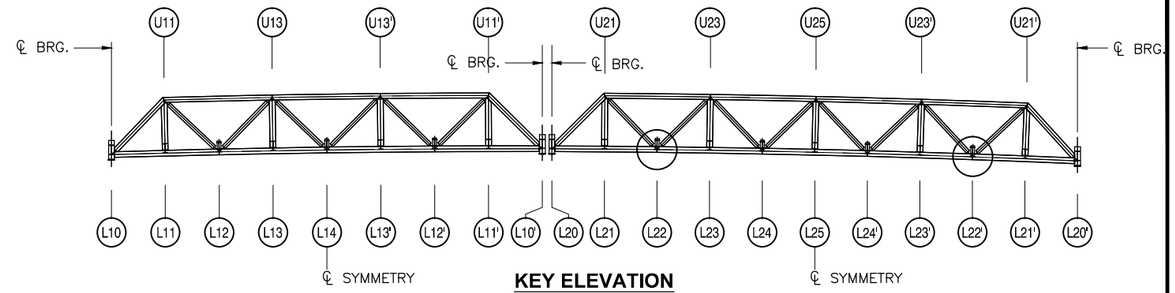

KEY ELEVATION

NOT TO SCALE

NOTES:

1. SEE SHEET T2 FOR NOTES.
2. (#) NUMBER OF BOLTS SHOWN ON VIEW.
3. SEE SHEET T9 FOR PLATE THICKNESS TABLE.

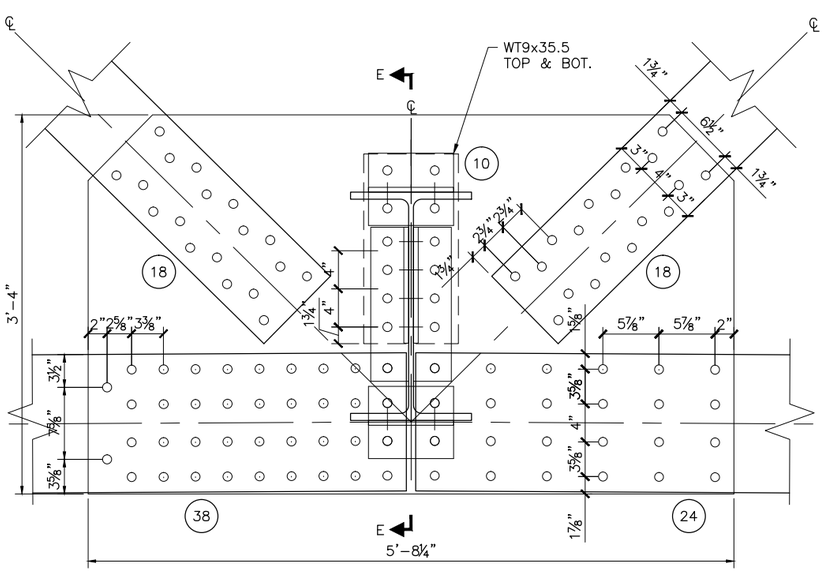

CONNECTION L22 - INNER ELEVATION

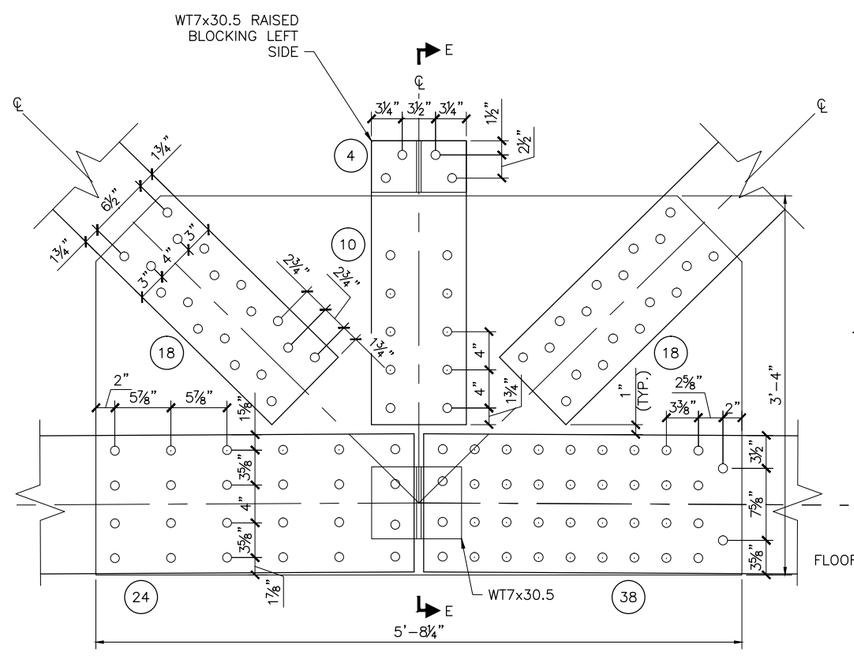

CONNECTION L22 - OUTER ELEVATION

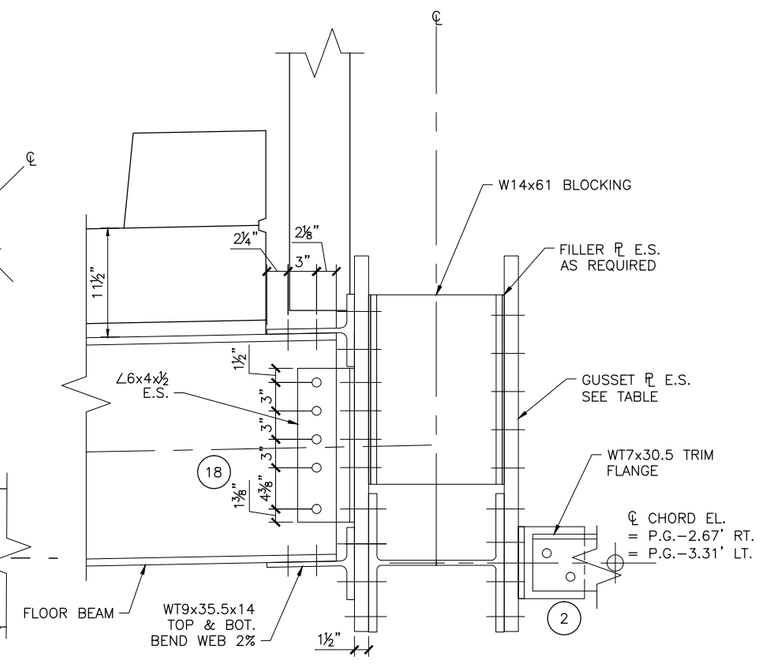

CONNECTION L22 - SECTION E-E RIGHT

SCALE: 1½" = 1'-0"

JOINTS L22

SCALE: 1½" = 1'-0"

ENGINEERS FST Since 1984

TRUSS JOINT DETAILS (4)	PROJECT NAME: RUTLAND CITY PROJECT NUMBER: BRF 3000 (19)
	FILE NAME: 064_Z08J096FRAMINGPLAN_NEW.DWG PROJECT LEADER: T. DENSFORD DESIGNED BY: T. DENSFORD DWG. NO.:
	PLOT DATE: 8/14/2015 DRAWN BY: B. LAVERGNE CHECKED BY: M. BRASSARD SHEET T11 OF

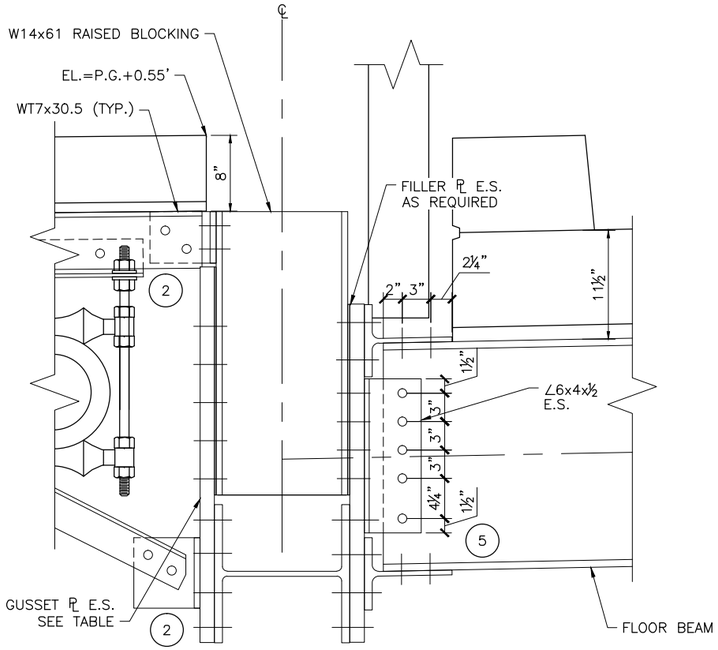

CONNECTION L24 - SECTION F-F LEFT

SCALE: 1½" = 1'-0"

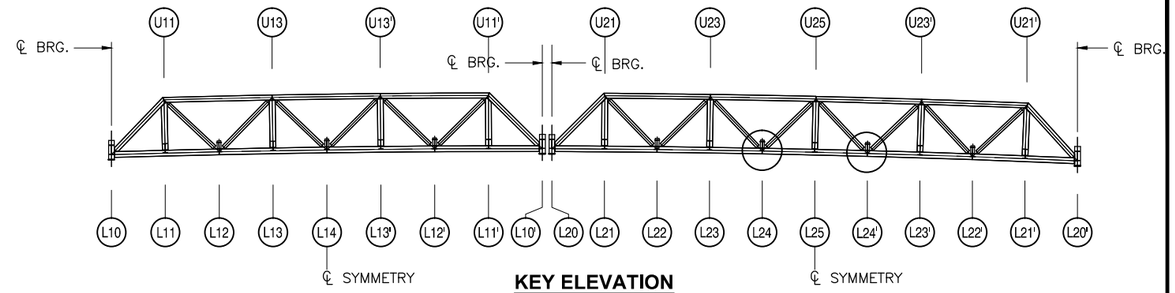

KEY ELEVATION

NOT TO SCALE

NOTES:

1. SEE SHEET T2 FOR NOTES.
2. (#) NUMBER OF BOLTS SHOWN ON VIEW.
3. SEE SHEET T9 FOR PLATE THICKNESS TABLE.

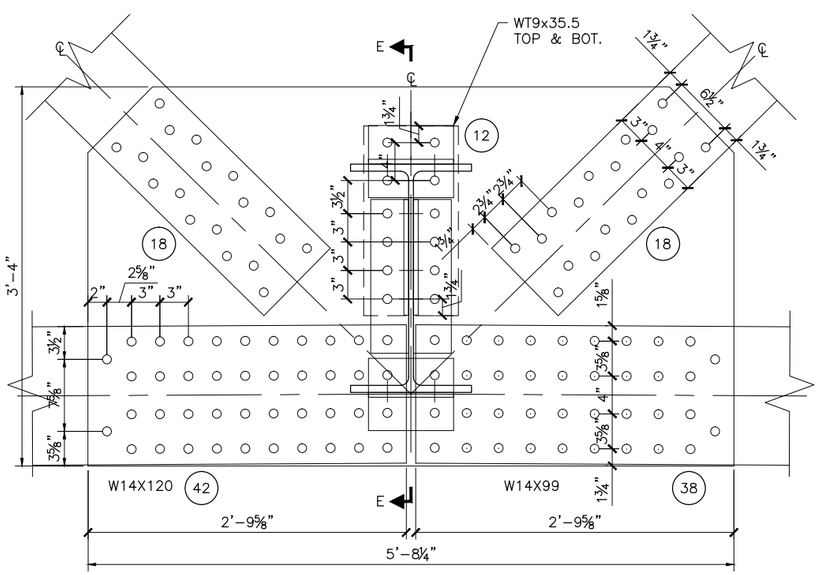

CONNECTION L24 - INNER ELEVATION

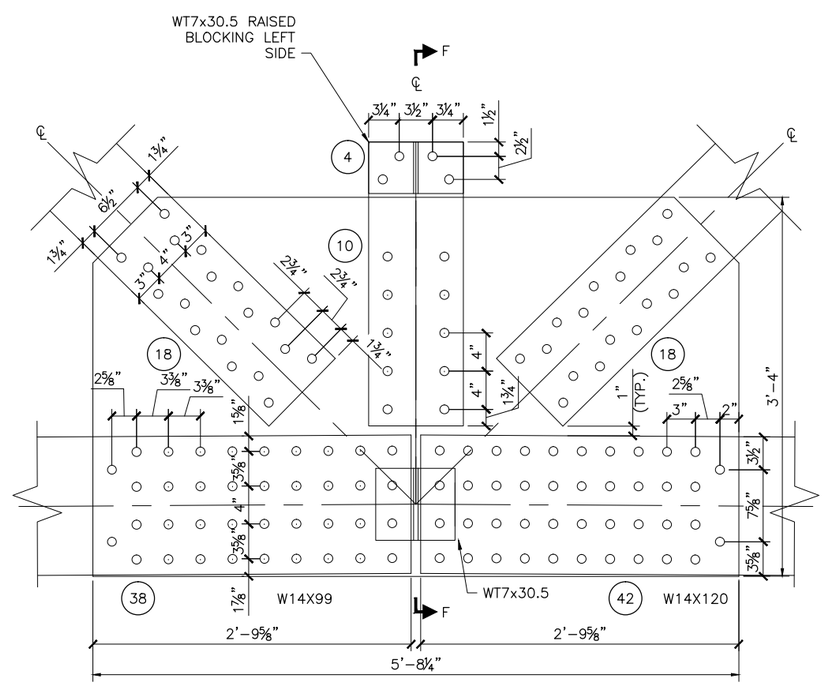

CONNECTION L24 - OUTER ELEVATION

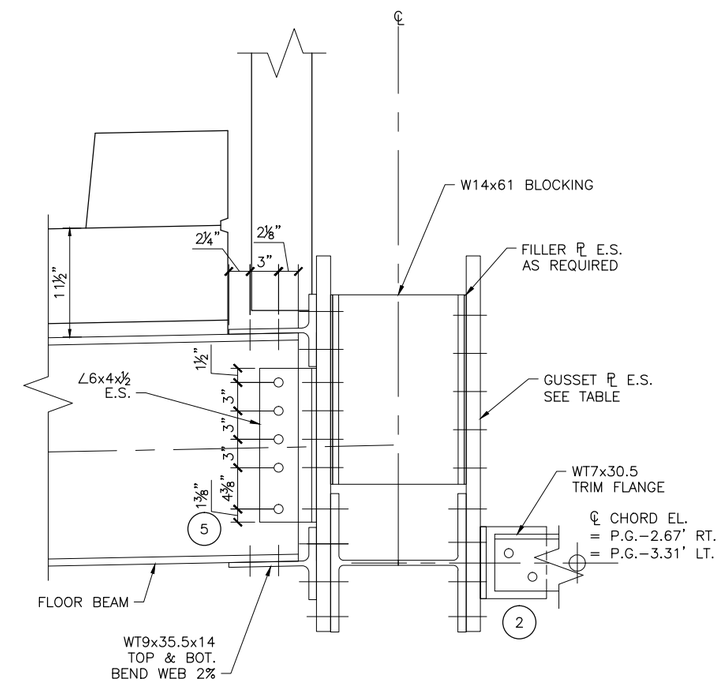

CONNECTION L24 - SECTION F-F RIGHT

JOINT L24

SCALE: 1½" = 1'-0"

ENGINEERS FST Since 1984

TRUSS JOINT DETAILS (5)	PROJECT NAME: RUTLAND CITY PROJECT NUMBER: BRF 3000 (19)
	FILE NAME: 064_Z08J096FRAMINGPLAN_NEW.DWG PROJECT LEADER: T. DENSFORD DESIGNED BY: T. DENSFORD DWG. NO.:
	PLOT DATE: 10/2/2015 DRAWN BY: B. LAVERGNE CHECKED BY: M. BRASSARD SHEET T12 OF

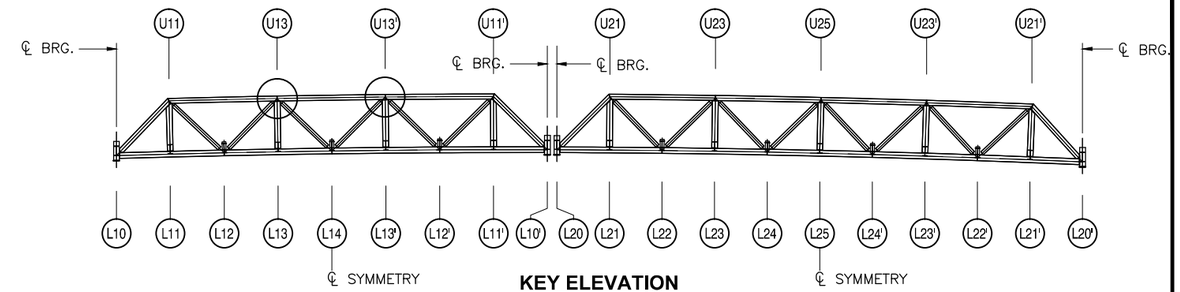

KEY ELEVATION
NOT TO SCALE

NOTES:

1. SEE SHEET T2 FOR NOTES.
2. (#) NUMBER OF BOLTS SHOWN ON VIEW.
3. SEE SHEET T9 FOR PLATE THICKNESS TABLE.

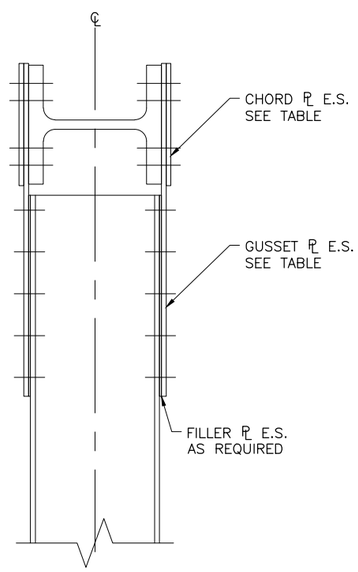

CONNECTION U13 -SECTION G-G

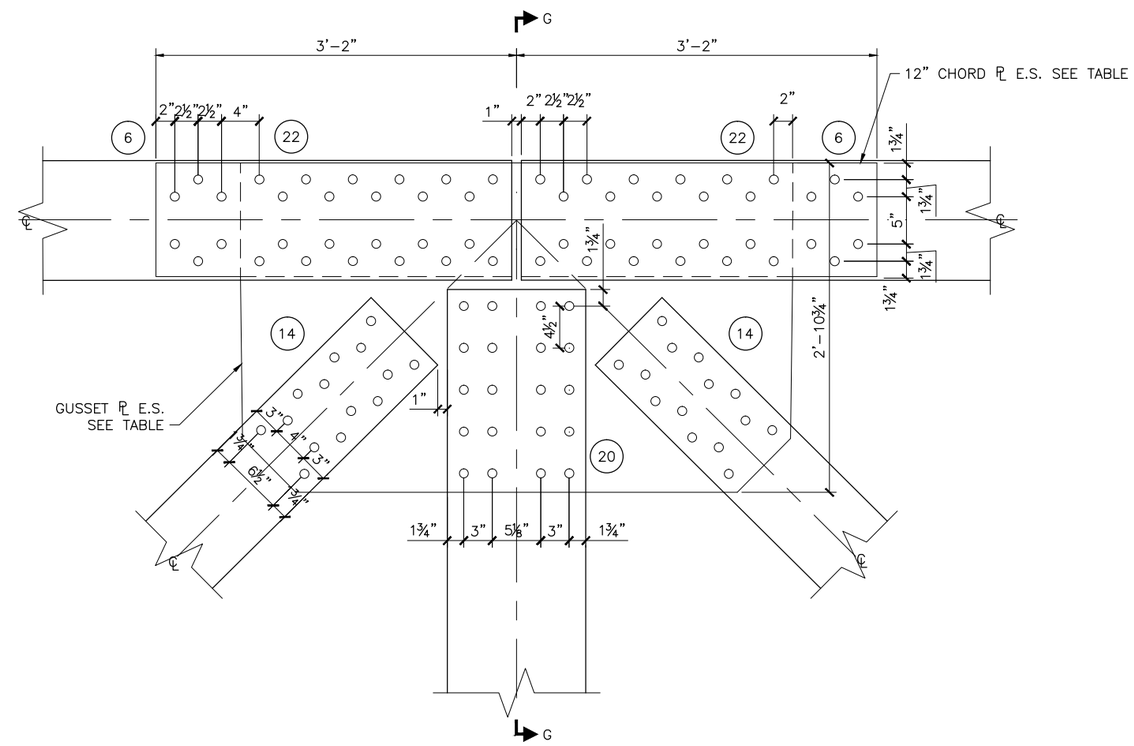

CONNECTION U13 - ELEVATION

JOINT U13
SCALE: 1½" = 1'-0"

ENGINEERS FST Since 1984

TRUSS JOINT DETAILS (6)	PROJECT NAME: RUTLAND CITY PROJECT NUMBER: BRF 3000 (19)	
	FILE NAME: 064_Z08J096FRAMINGPLAN_NEW.DWG PROJECT LEADER: T. DENSFORD DESIGNED BY: T. DENSFORD DWG. NO.:	PLOT DATE: 8/14/2015 DRAWN BY: B. LAVERGNE CHECKED BY: M. BRASSARD SHEET T13 OF

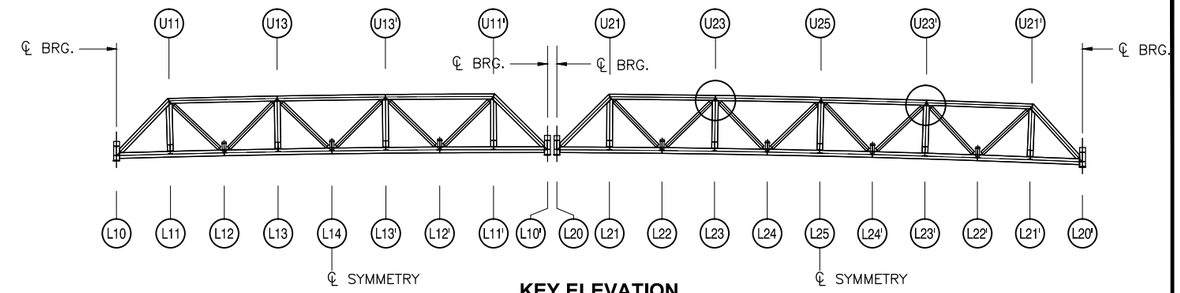

KEY ELEVATION

NOT TO SCALE

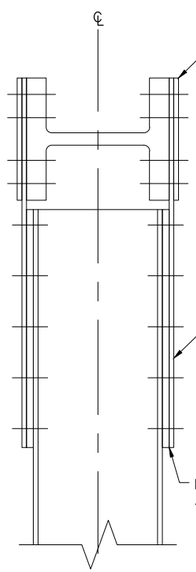

CONNECTION U23 SECTION H-H

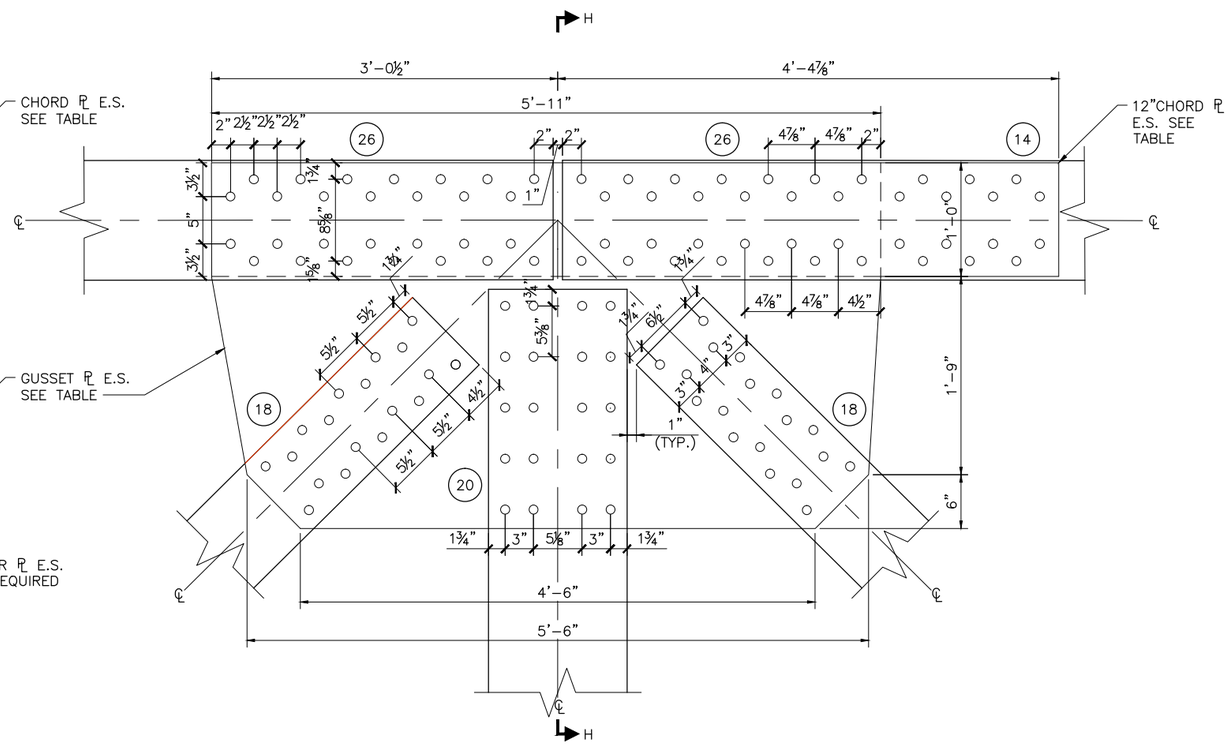

CONNECTION U23 ELEVATION

JOINT U23

SCALE: 1½" = 1'-0"

NOTES:

1. SEE SHEET T2 FOR NOTES.
2. (#) NUMBER OF BOLTS SHOWN ON VIEW.
3. SEE SHEET T9 FOR PLATE THICKNESS TABLE.

ENGINEERS FST Since 1984

TRUSS JOINT DETAILS (7)

PROJECT NAME: RUTLAND CITY	
PROJECT NUMBER: BRF 3000 (19)	
FILE NAME: 064_Z08J096FRAMINGPLAN_NEW.DWG	PLOT DATE: 8/14/2015
PROJECT LEADER: T. DENSFORD	DRAWN BY: B. LAVERGNE
DESIGNED BY: T. DENSFORD	CHECKED BY: M. BRASSARD
DWG. NO.:	SHEET T14 OF

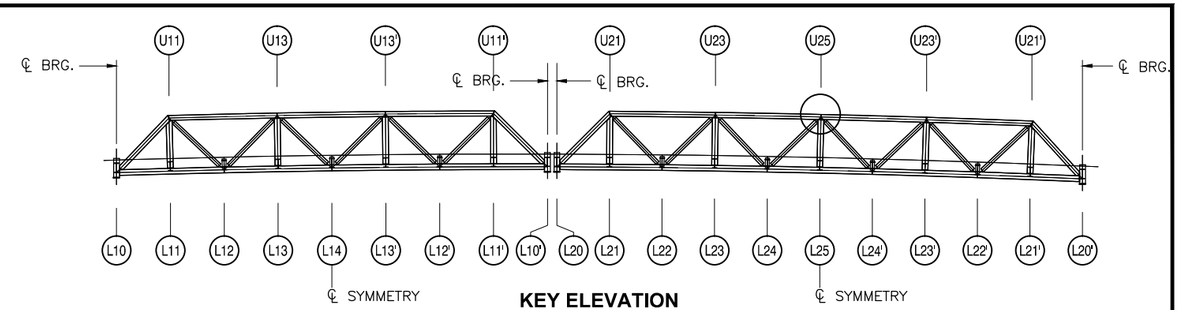

KEY ELEVATION
NOT TO SCALE

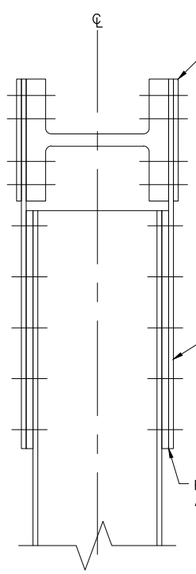

CONNECTION U25 SECTION I-I

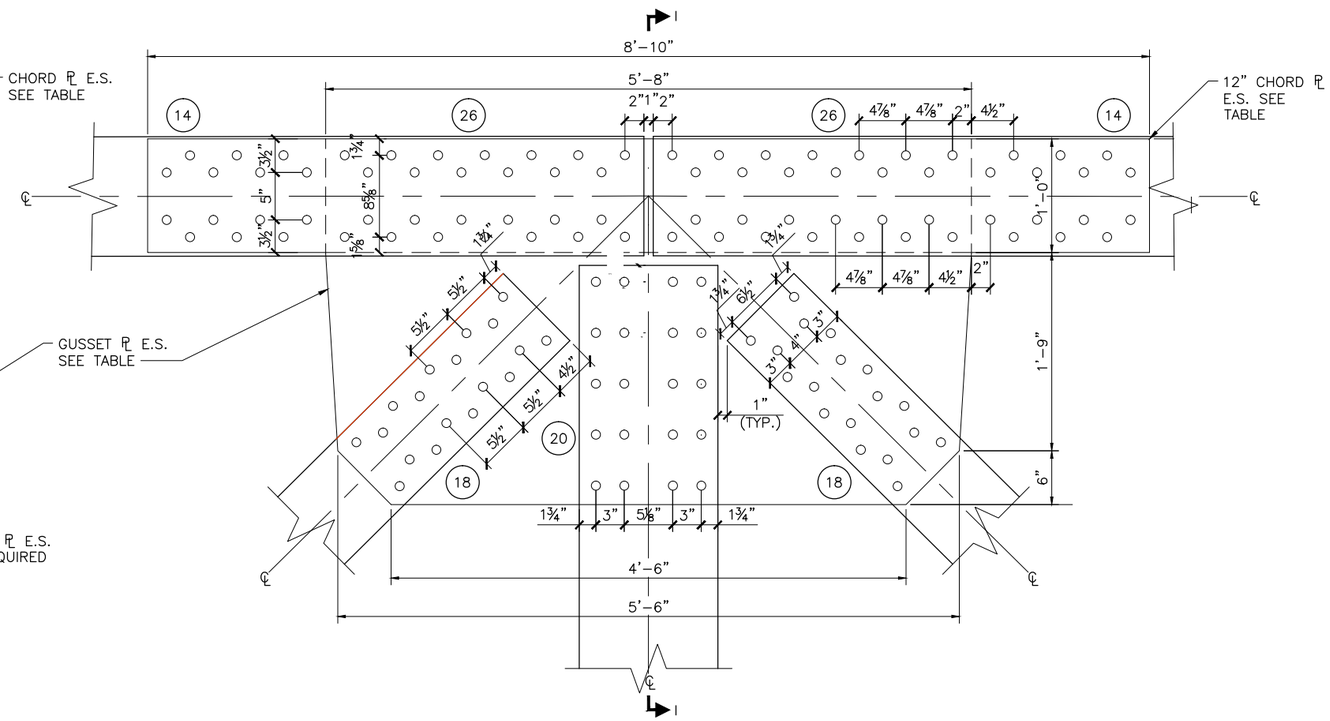

CONNECTION U25 ELEVATION

NOTES:

1. SEE SHEET T2 FOR NOTES.
2. (#) NUMBER OF BOLTS SHOWN ON VIEW.
3. SEE SHEET T9 FOR PLATE THICKNESS TABLE.

JOINT U25
SCALE: 1½" = 1'-0"

ENGINEERS FST Since 1984

TRUSS JOINT DETAILS (8)	PROJECT NAME: RUTLAND CITY	
	PROJECT NUMBER: BRF 3000 (19)	
	FILE NAME: 064_Z08J096FRAMINGPLAN_NEW.DWG	PLOT DATE: 8/14/2015
	PROJECT LEADER: T. DENSFORD	DRAWN BY: B. LAVERGNE
	DESIGNED BY: T. DENSFORD	CHECKED BY: M. BRASSARD
	DWG. NO.:	SHEET T15 OF

TRUSS BEARING NOTES

1. APPROACH SPAN FIXED AND EXPANSION BEARINGS SHALL BE PAID FOR UNDER THE ITEM 531.11 "BEARING DEVICE ASSEMBLY, ELASTOMERIC PAD" AND SHALL CONFORM TO APPLICABLE SUBSECTIONS OF SECTION 531 AND 731.

2. ALL MATERIALS SHALL CONFORM TO SECTION 14 OF THE AASHTO LRFD BRIDGE DESIGN SPECIFICATIONS AND SECTION 18 OF AASHTO LRFD BRIDGE CONSTRUCTION SPECIFICATIONS AND ALL AASHTO OR ASTM SPECIFICATIONS SPECIFIED IN THIS SECTION.

3. THE ELASTOMERIC COMPOUND SHALL BE VIRGIN CRYSTALLIZATION RESISTANT POLYCHLOROPENE (NEOPRENE) OR VIRGIN NATURAL POLYISOPRENE (NATURAL RUBBER) AS THE RAW POLYMER, EXCEPT WHEN USING A DISC THE COMPOUND SHALL BE BASED ON POLYETHER URETHANE, USING ONLY VIRGIN MATERIALS. THE RESULTING PRODUCT SHALL BE FREE OF POROUS AREAS, WEAK SECTIONS, BUBBLES, FOREIGN MATTER, OR OTHER DEFECTS AFFECTING SERVICEABILITY. IT SHALL CONFORM TO THE REQUIREMENTS OF AASHTO M 251.

4. ELASTOMER WAS DESIGNED USING METHOD A, WITH A NOMINAL HARDNESS OF 50 +/— 5 ON THE SHORE A SCALE, EXCEPT FOR DISCS WHICH SHALL HAVE A HARDNESS OF 50 +/— 5 ON THE SHORE D SCALE. IT IS ACCEPTABLE TO TEST PER AASHTO M 251 APPENDIX X1. ELASTOMER SHALL MEET THE REQUIREMENTS FOR LOW—TEMPERATURE ZONE D, GRADE

5. ALTERNATE CONFIGURATIONS FOR BEARINGS MAY BE SUBMITTED FOR APPROVAL. ANY ALTERNATE SUBMITTED SHALL BE DESIGNED AND CERTIFIED TO MEET THE DESIGN LOADS AND CRITERIA SHOWN ON THIS SHEET. THE ALTERNATE SHALL MAINTAIN THE ANCHORAGE SYSTEM SHOWN AND SHALL BE DESIGNED PER THE LATEST AASHTO LRFD BRIDGE DESIGN SPECIFICATION. BRIDGE SEAT ELEVATIONS MAY BE REVISED TO ACCOMMODATE AN ALTERNATIVE CONFIGURATION.

6. STEEL REINFORCED ELASTOMERIC PADS SHALL BE WITHIN THE TOLERANCES LISTED IN TABLE 2 IN AASHTO M251. EXTERNAL LOAD PLATES SHALL BE WITHIN THE TOLERANCES GIVEN IN SECTION 18 OF THE AASHTO LRFD BRIDGE CONSTRUCTION SPECIFICATION.

7. THE PREFORMED BEARING PAD BENEATH THE MASONRY PLATE SHALL HAVE THE SAME SIZE AND ANCHOR BOLT HOLE LAYOUT AS THE CORRESPONDING MASONRY PLATE.

8. BEARING SHALL BE SET LEVEL AND PARALLEL WITHIN 0.03125 IN./FT. WITH FULL AND UNIFORM BEARING. THE CONCRETE UNDER THE BEARING DEVICE SHALL BE LEVEL.

9. DURING ANY WELDING, SURFACES IN CONTACT WITH THE ELASTOMER SHALL BE RESTRICTED TO 200 DEGREES FAHRENHEIT, AND SUFACES IN CONTACT WITH PTFE SHALL BE RESTRICTED TO 300 DEGREES FAHRENHEIT. TEMPERATURE SHALL BE DETERMINED BY TEMPERATURE INDICATING WAX PENCILS OR OTHER SUITABLE MEANS.

10. PRIOR TO ORDERING MATERIALS AND STARTING THE WORK, THE CONTRACTOR SHALL SUBMIT A DRILLING AND MORTARING PROPOSAL TO THE ENGINEER FOR APPROVAL, INCLUDING A PREMIXED MORTAR MATERIAL BRAND NAME.

11. THE DRILLED HOLES TO BE MORTARED SHALL BE THOROUGHLY CLEANED, WETTED, AND FREE OF STANDING WATER.

12. THE MORTAR SHALL BE MIXED IN A MECHANICAL MIXER ACCORDING TO THE MANUFACTURER'S RECOMMENDATIONS AND SHALL BE READILY POURABLE SO THAT WHEN POURED IT COMPLETELY FILLS THE REMAINING HOLE CAVITIES. THE PLACEMENT OF MORTAR FOR EACH BEARING SHALL BE CONTINUOUS AND COMPLETE AT ALL HOLE LOCATIONS.

13. ALL EXPOSED MORTAR SHALL BE CURED FOR A PERIOD OF NOT LESS THAN THREE (3) DAYS BY THE WE"|'ED BURLAP METHOD IN ACCORDANCE WITH SECTION 501. CURING SHALL COMMENCE AS SOON AS PRACTICAL AFTER MORTAR PLACEMENT. THE CONTRACTOR SHALL NOT APPLY ANY FORCES TO THE ANCHOR BOLTS DURING THE CURING PERIOD.

14. ANCHOR BOLTS TO BE DOUBLE NUTTED SHALL USE THE FOLLOWING PROCEDURE: INSTALL THE LOWER NUT IN CONTACT WITH TOP OF SOLE PLATE, AND THEN BACK OFF ´/2 TURN. INSTALL UPPER NUT SNUG TIGHT TO PREVENT LOWER NUTS FROM LOOSENING.

15. THE BEARING MANUFACTURER SHALL INCLUDE A TEMPERATURE SETTING TABLE ON THE FABRICATION DRAWINGS.

16. APPROACH SPAN SEAT ELEVATIONS ARE BASED ON THE BEARING HEIGHTS SHOWN. PRIOR TO CASTING ABUTMENT 1 AND THE PIER, THE CONTRACTOR SHALL SUBMIT TO THE ENGINEER THE PROPOSED BEARING HEIGHT AS PROVIDED BY THE MANUFACTURER AND ANY ELEVATION MODIFICATIONS REQUIRED BEFORE CONSTRUCTING ABUTMENT 1 OR THE PIER.

17. BOLTS INSTALLED IN PAINTED STRUCTURAL COMPONENTS SHALL BE TYPE 1, SHALL BE PROVIDED WITH APPROPRIATE NUTS AND WASHERS, AS REQUIRED, AND THE COMBINATION OF BOLT, NUT, AND WASHER SHALL BE MECHANICALLY GALVANIZED IN ACCORDANCE WITH AASHTO M 298, CLASS 50, TYPE 1.

18. BOLTS FURNISHED FOR BEARINGS SHALL CONFORM TO SUBSECTION 71408. THE BOLTS, NUTS, AND WASHERS FURNISHED SHALL BE TESTED AND CERTIFIED AS MEETING THEREQUIREMENTS OF THE ZINC THICKNESS TEST AS SPECIFIED IN SUBSECTION 714.05, IN ADDITION TO ANY OTHER TEST AND CERTIFICATION REQUIREMENTS.

19. THE WELDS FOR THE SOLE PLATE CONNECTION SHOULD ONLY BE ALONG THE LONGITUDINAL GIRDER AXIS. TRANSVERSE JOINTS SHOULD BE SEALED WITH AN ACCEPTABLE CAULKING MATERIAL.

20. PRIOR TO WELDING BEAMS TO SOLE PLATES, THE CONCRETE DECK SHALL BE PLACED AND CURED, AND THE BEAMS SHALL BE RAISED TO ALLOW RELEASE OF INITIAL BEARING DEFORMATION DUE TO BEAM CAMBER RELAXATION.

21. GALVANIZING THAT HAS BEEN DAMAGED SHALL BE REPAIRED IN ACCORDANCE WITH ASTM A780, STANDARD PRACTICE FOR REPAIR OF DAMAGED HOT DIPPED GALVANIZED COATINGS, ANNEX A2. THE PAINT USED IN THE REPAIR SHALL BE ORGANIC—RICH, CONTAINING 92 PERCENT(MIN.) ZINC BY WEIGHT IN THE DRY FILM. THE PAINT SHALL BE APPLIED PER MANUFACTURE RECOMMENDATIONS TO A THICKNESS EQUIVALENT TO THE SURROUNDING GALVANIZING.

22. METALIZING THAT HAS BEEN DAMAGED SHALL BE REPAIRED USING THE METHODS DESCRIBED IN NOTE 21.

23. STEEL REINFORCED ELASTOMERIC BEARINGS SHALL HAVE A MINIMUM 1/8 INCH EDGE SEAL OF ELASTOMER INTEGRAL WITH BEARING OVER ALL INTERNAL PLATES.

24. DESIGN CRITERIA:
    - A) MASONRY PLATE TO CONCRETE DESIGN PRESSURE = 925 PSI
    - B) DESIGN ROTATION = 0.011 RAD
    - C) HORIZONTAL CAPACITY SHALL BE MINIMUM OF 20% VERTICAL LOAD IN ANY UNRESTRAINED DIRECTION.
    - D) DESIGN LOAD PER BEARING
      - RDL = 265 KIPS
      - RLL = 120 KIPS
    - E) NO FABRIC REINFORCEMENT WILL BE ALLOWED IN ELASTOMERIC PADS

ENGINEERS FST Since 1984

TRUSS BEARING NOTES

PROJECT NAME: RUTLAND CITY	
PROJECT NUMBER: BRF 3000 (19)	
FILE NAME: 00C_Z08J096APPSPANBRGNOTES.DWG	PLOT DATE: 8/14/2015
PROJECT LEADER: T. DENSFORD	DRAWN BY: B. LAVERGNE
DESIGNED BY: T. DENSFORD	CHECKED BY: M. BRASSARD
DWG. NO.:	SHEET T16 OF

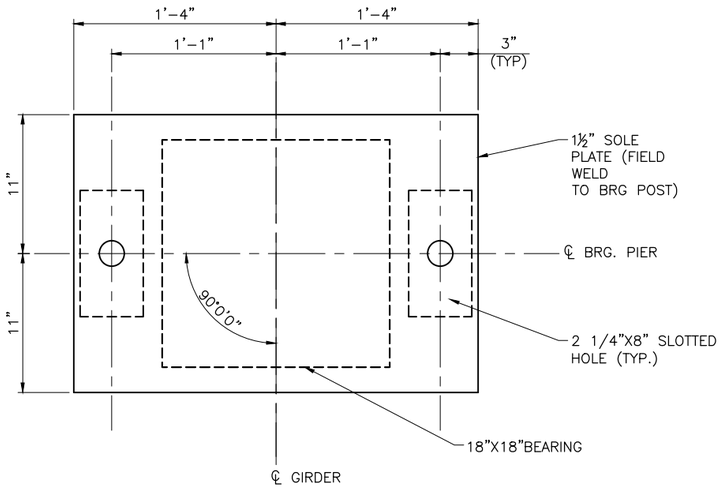

SOLE PLATE PLAN

SCALE: 2" = 1'-0"

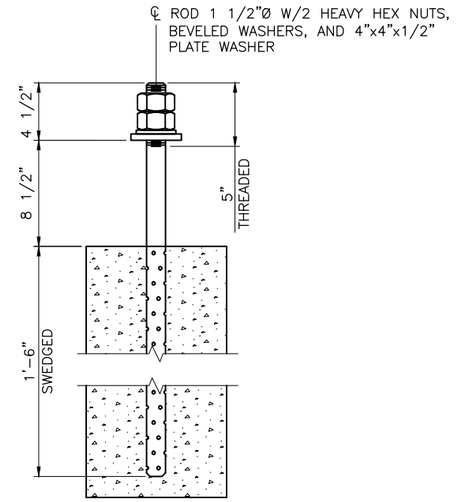

ANCHOR ROD DETAIL

SCALE: 2" = 1'-0"

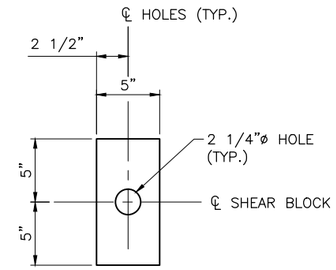

SHEAR BLOCK PLAN

SCALE: 2" = 1'-0"

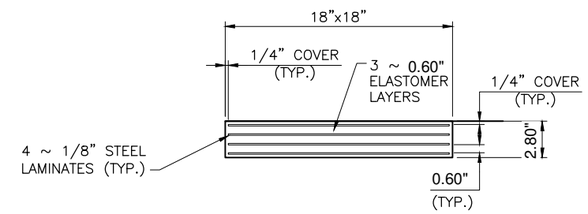

BEARING PAD SECTION

SCALE: 2" = 1'-0"

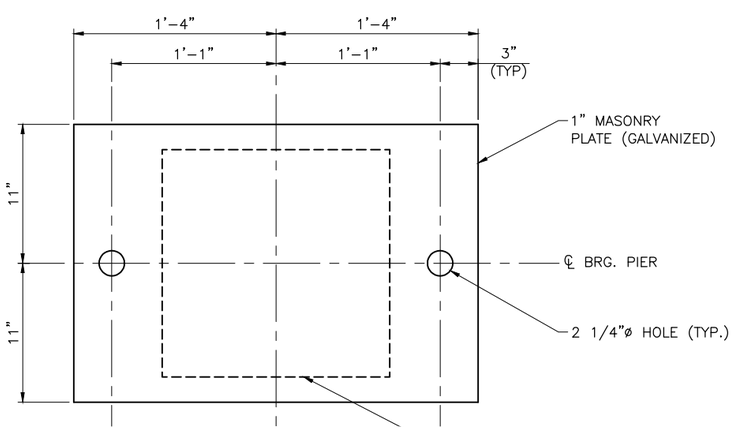

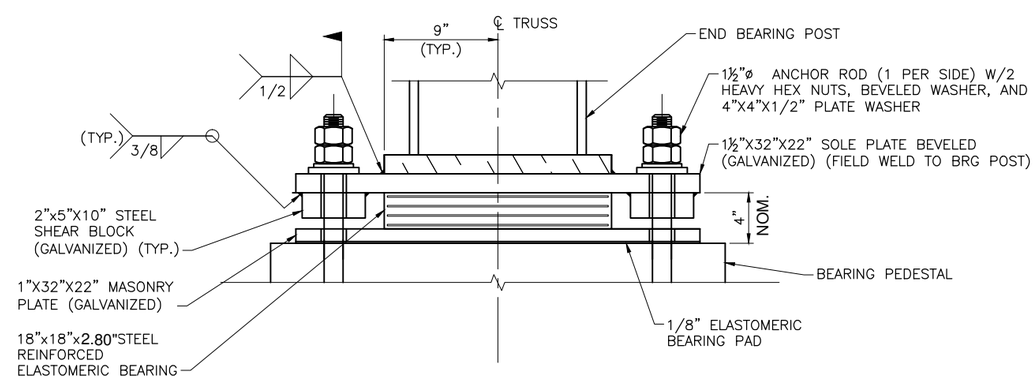

END ELEVATION (4 BEARINGS REQUIRED)

SCALE: 2" = 1'-0"

ENGINEERS FST Since 1914

ABUTMENT BEARING DETAILS

PROJECT NAME: RUTLAND CITY	
PROJECT NUMBER: BRF 3000 (19)	
FILE NAME:	PLOT DATE: 8/14/2015
PROJECT LEADER: T. DENSFORD	DRAWN BY: B. LAVERGNE
DESIGNED BY: T. DENSFORD	CHECKED BY: M. BRASSARD
DWG. NO.:	SHEET T17 OF

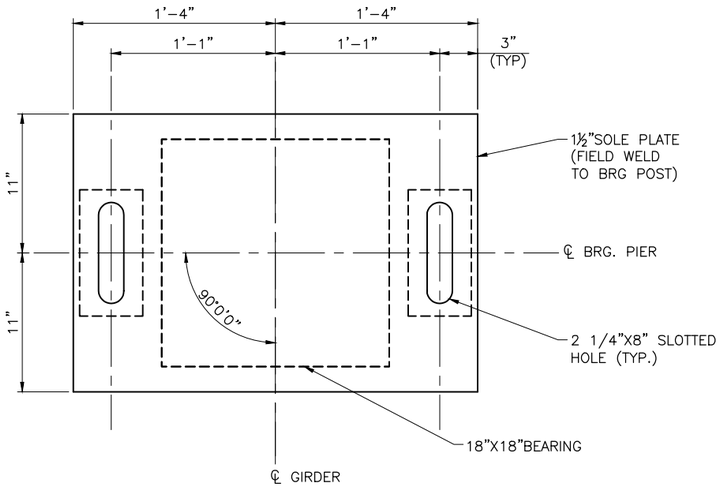

SOLE PLATE PLAN

SCALE: 2" = 1'-0"

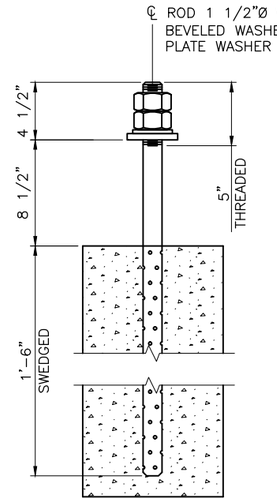

ANCHOR ROD DETAIL

SCALE: 2" = 1'-0"

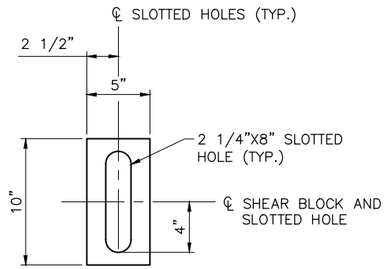

SHEAR BLOCK PLAN

SCALE: 2" = 1'-0"

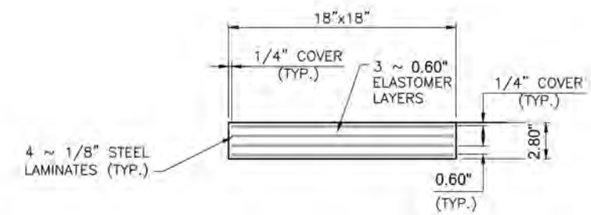

BEARING PAD SECTION

SCALE: 2" = 1'-0"

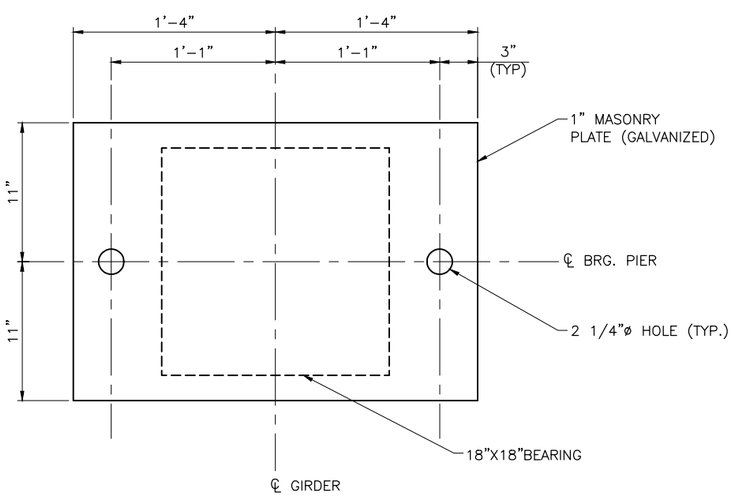

MASONRY PLATE PLAN

SCALE: 2" = 1'-0"

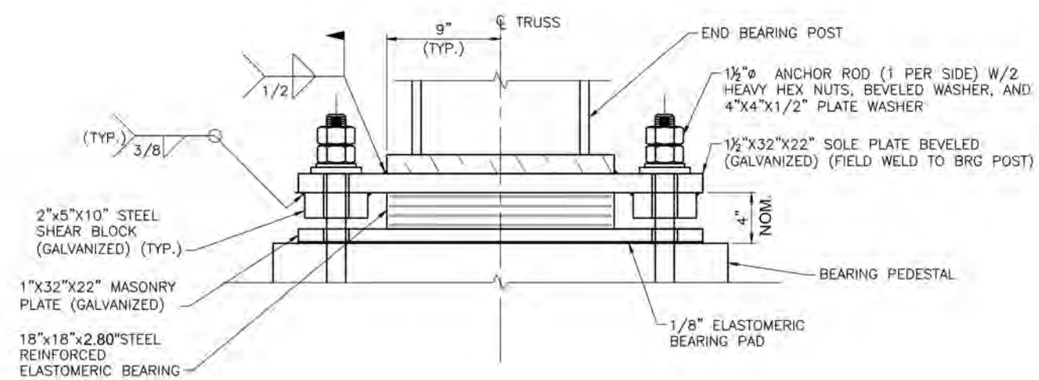

END ELEVATION (4 BEARINGS REQUIRED)

SCALE: 2" = 1'-0"

ENGINEERS FST Since 1984

PIER BEARING DETAILS

PROJECT NAME: RUTLAND CITY	
PROJECT NUMBER: BRF 3000 (19)	
FILE NAME: 000_Z08J096BEARING.DWG	PLOT DATE: 8/14/2015
PROJECT LEADER: T. DENSFORD	DRAWN BY: B. LAVERGNE
DESIGNED BY: T. DENSFORD	CHECKED BY: M. BRASSARD
DWG. NO.:	SHEET T18 OF

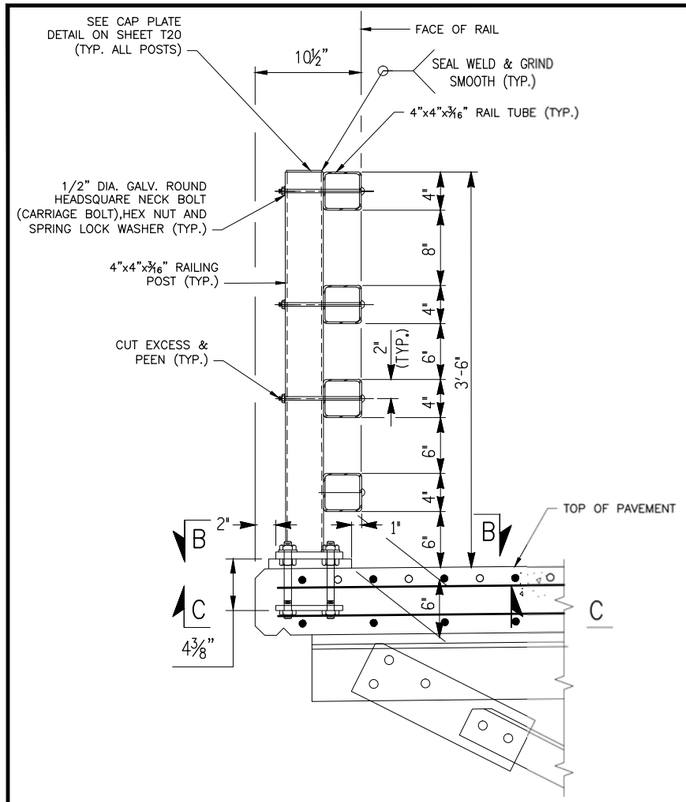

SECTION A-A

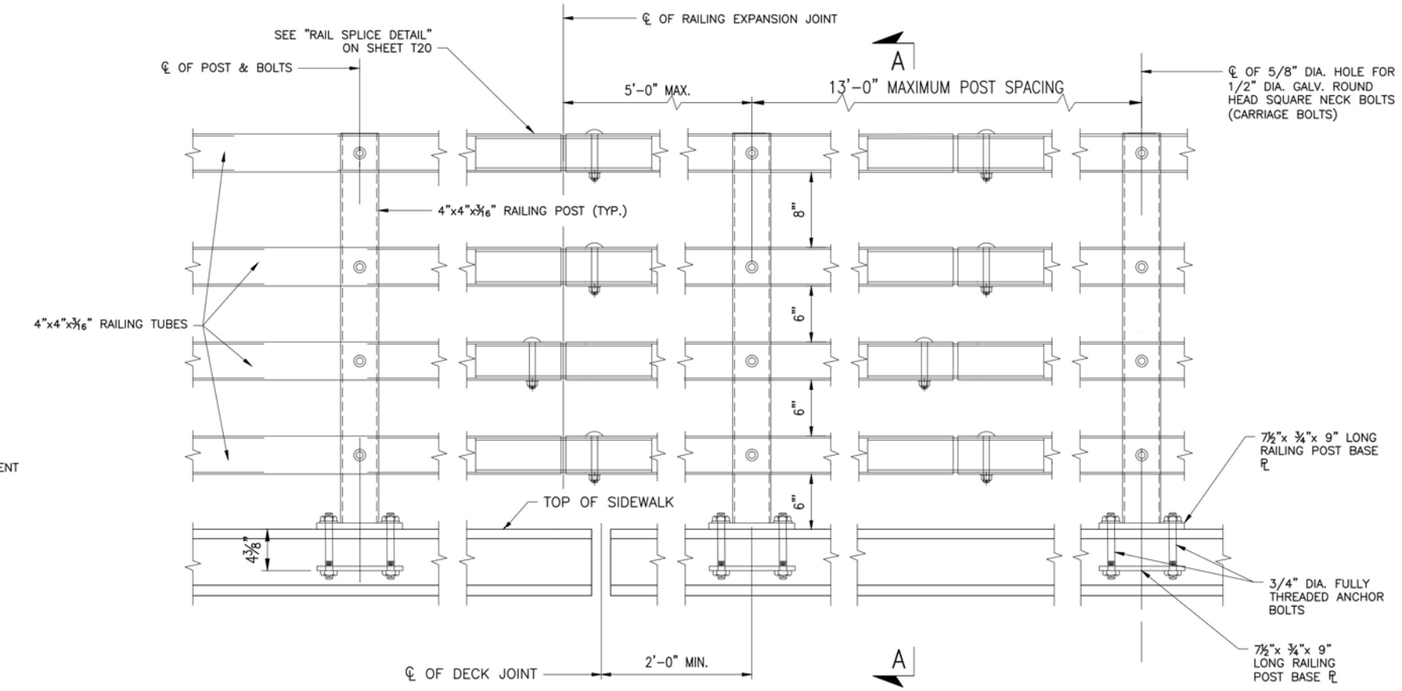

TYPICAL OUTSIDE ELEVATION

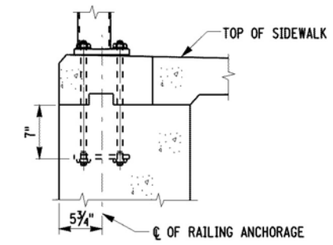

RAILING POST ANCHORAGE DETAIL ON U-WINGWALL

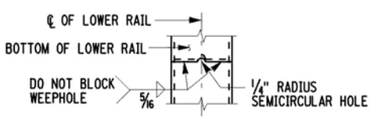

TYPICAL WEEP HOLE DETAIL FOR LOWER RAILS

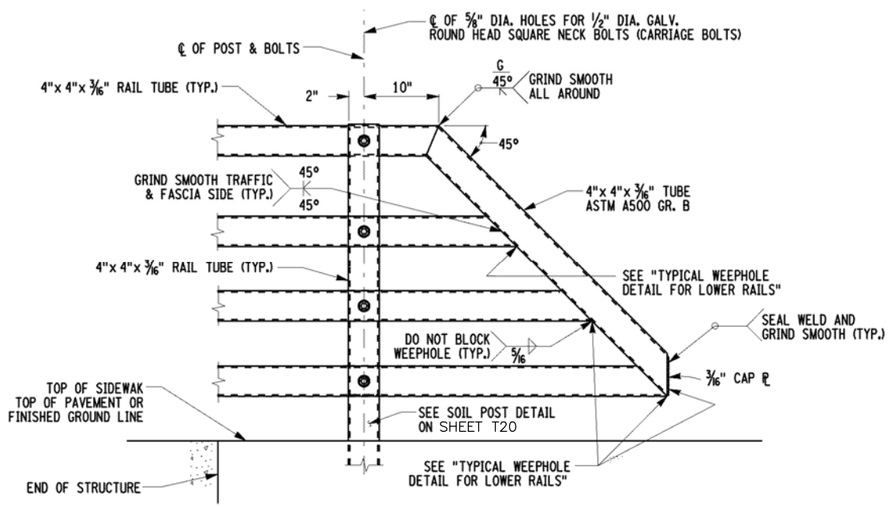

TYPICAL END ELEVATION FOR PEDESTRIAN BRIDGE RAILING

NOTES:

1. FOR SECTIONS B–B, C–C, CAP PLATE DETAIL AND SOIL POST DETAIL,SEE SHEET T20.
2. DETAILS ON THE DRAWINGS LABELED AS "NOT TO SCALE" ARE INTENTIONALLY DRAWN NOT TO SCALE FOR VISUAL CLARITY. ALLOTHER DETAILS, FOR WHICH NO SCALE IS SHOWN, ARE DRAWNPROPORTIONAL AND ARE FULLY DIMENSIONED.

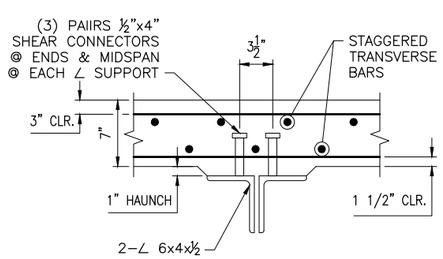

SECTION X-X

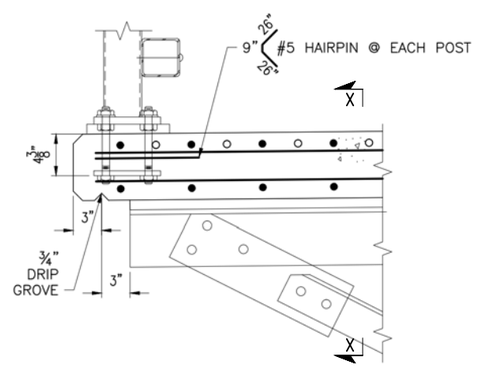

CURBLESS RAILING POST ANCHORAGE DETAILS ON SUPERSTRUCTURE

ENGINEERS FST Since 1984

PEDESTRIAN RAILING DETAILS 1

PROJECT NAME:	RUTLAND CITY
PROJECT NUMBER:	BRF 3000 (19)
FILE NAME: 00E_Z08J096PEDSRAILDET.DWG	PLOT DATE: 8/14/2015
PROJECT LEADER: T. DENSFORD	DRAWN BY: B. LAVERGNE
DESIGNED BY: T. DENSFORD	CHECKED BY: M. BRASSARD
DWG. NO.: 00E	SHEET T19 OF

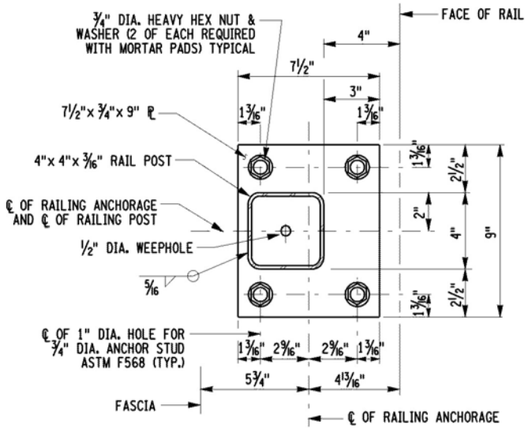

SECTION B-B
RAILING POST BASE PLATE

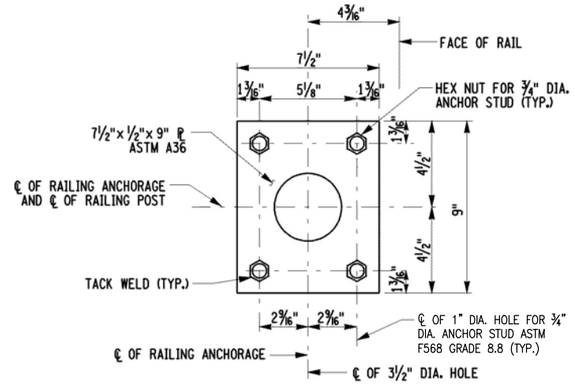

SECTION C-C
RAILING POST ANCHOR PLATE

NOTES:

1. ALL RAILING IS TO BE FABRICATED AND ERECTED SO THAT THE RAILS ARE PARALLEL TO EACH OTHER AND TO THE GRADE. THE POSTS ARE TO BE SET PERPENDICULAR TO THE GRADE
2. TUBULAR STEEL RAILS, RAIL POSTS, NUTS AND WASHERS, CARRIAGE BOLTS, BASE PLATE ASSEMBLIES, ANCHOR STUDS, ANCHOR PLATES, ANY NECESSARY SHIMS AND MORTAR PADS TO BE PAID FOR UNDER THE RAILING ITEM 900.640.
3. AFTER THE ANCHOR STUD NUTS HAVE BEEN PLACED AND TIGHTENED TO THE SATISFACTION OF THE ENGINEER, THE STUDS SHALL BE CUT OFF 1" ABOVE THE NUT AND THE THREADS SHALL BE DAMAGED SO THE NUT SHALL NOT BACK OFF.
4. RAIL SHALL SPAN A MINIMUM OF 3 POSTS, EXCEPT AT THE END OF THE BRIDGE RAILING WHERE THE RAIL MAY SPAN A MINIMUM OF 2 POSTS.
5. RAILING COMPONENTS ARE TO BE GALVANIZED IN ACCORDANCE WITH MATERIAL SPECIFICATION NOTED IN THE SPECIAL PROVISIONS.
6. PRIOR TO GALVANIZING, GRIND ALL SHARP EDGES TO A MINIMUM RADIUS OF 1/16".
   CEMENT MORTAR PADS SHALL BE PAID FOR UNDER THE RAILING ITEM.
7. REPAIRS TO ALL DAMAGED GALVANIZED SURFACES INCLUDING ANCHOR STUDS SHALL BE MADE IN ACCORDANCE WITH MATERIAL SPECIFICATION 719-01.
8. FOR SECTIONS B-B, C-C, CAP PLATE DETAIL AND SOIL POST DETAIL,SEE SHEET T19.
9. DETAILS ON THE DRAWINGS LABELED AS "NOT TO SCALE" ARE INTENTIONALLY DRAWN NOT TO SCALE FOR VISUAL CLARITY. ALLOTHER DETAILS, FOR WHICH NO SCALE IS SHOWN, ARE DRAWNPROPORTIONAL AND ARE FULLY DIMENSIONED.

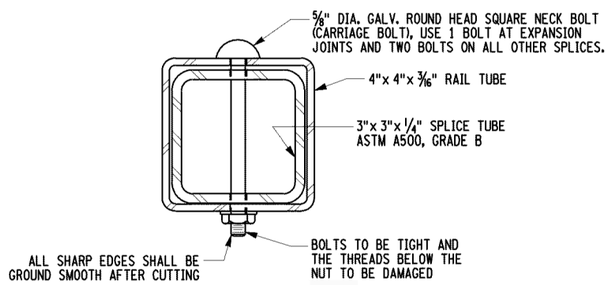

SECTION D-D

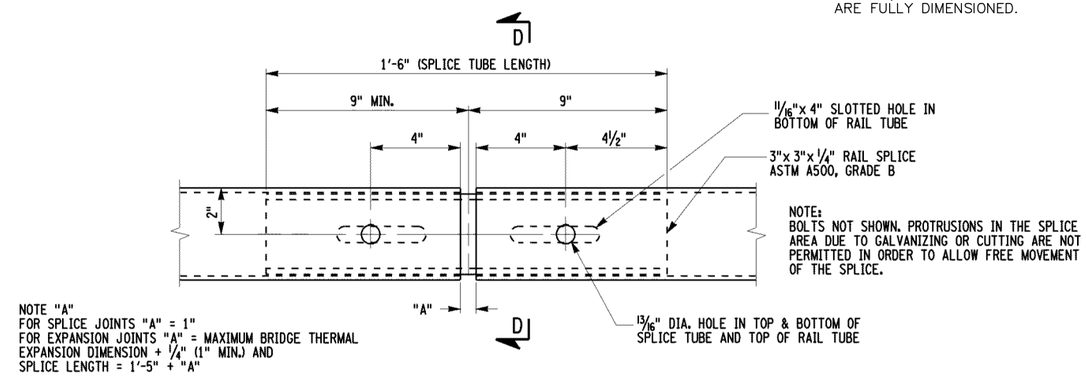

RAIL SPLICE DETAIL

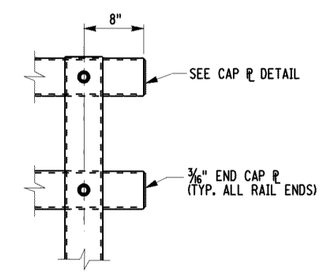

ALTERNATE RAIL TERMINATION DETAIL

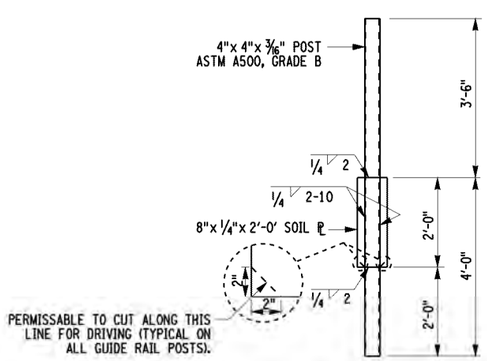

SOIL POST DETAIL FOR PEDESTRIAN BRIDGE RAILING (FOUR RAIL)
(TO BE USED OFF OF THE STRUCTURE)

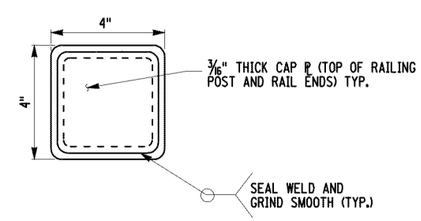

CAP PLATE DETAIL
(TYPICAL FOR TOP OF RAILING POSTS AND RAIL ENDS)
NOT TO SCALE

ENGINEERS FST Since 1914

PEDESTRIAN RAILING DETAILS 2	PROJECT NAME: RUTLAND CITY PROJECT NUMBER: BRF 3000 (19)
	FILE NAME: 00E_Z08J096PEDSRAILDET.DWG PROJECT LEADER: T. DENSFORD DESIGNED BY: T. DENSFORD DWG. NO.: 00E
	PLOT DATE: 8/14/2015 DRAWN BY: B. LAVERGNE CHECKED BY: M. BRASSARD SHEET T20 OF

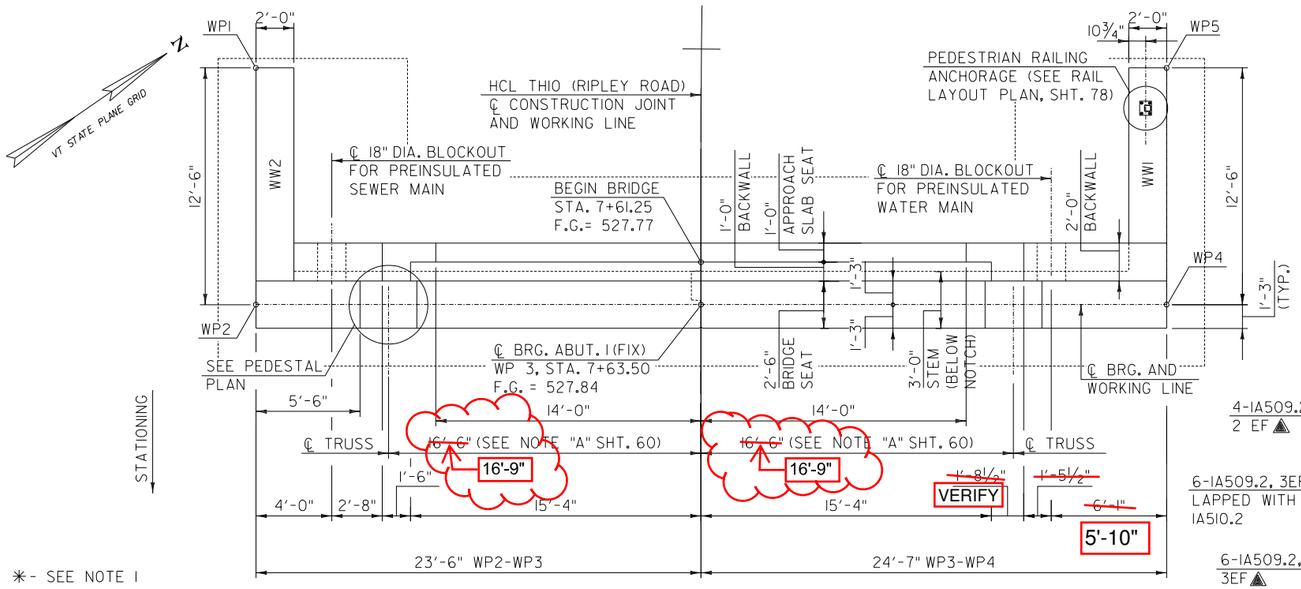

PLAN

SCALE: 1/4" = 1'-0"

✱- SEE NOTE 1

✱✱- ELEVATIONS ARE ASSUMED AND MAY REQUIRE REVISION AFTER PREFABRICATED TRUSS IS SELECTED. IT IS CONTRACTOR'S RESPONSIBILITY TO PROVIDE CURRENT ELEVATIONS AND REVISE REINFORCEMENT DETAILS (IF NECESSARY) AT NO ADDITIONAL COST TO THE STATE OF VERMONT.

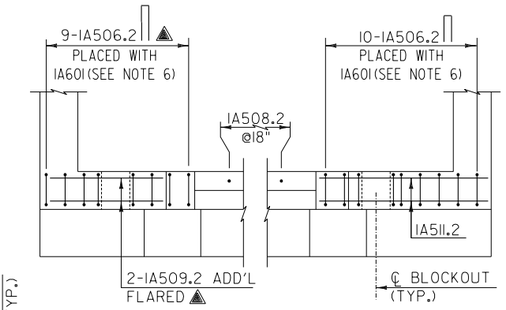

SECTION U–U

SCALE: 1/4" = 1'-0"

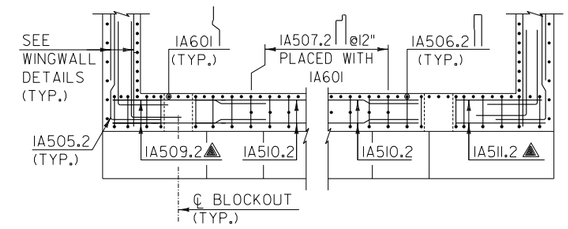

SECTION V–V

SCALE: 1/4" = 1'-0"

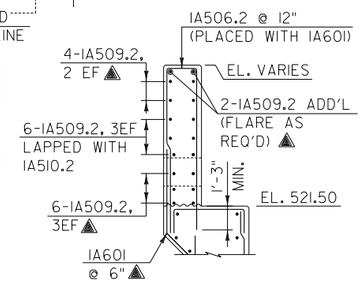

SECTION S–S

SCALE: 1/4" = 1'-0"

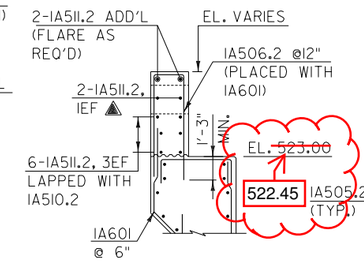

SECTION T–T

SCALE: 1/4" = 1'-0"

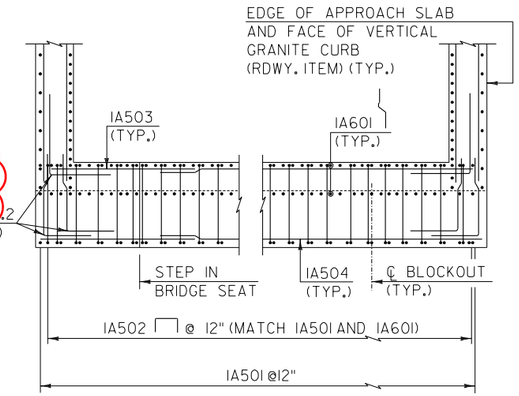

SECTION W–W

SCALE: 1/4" = 1'-0"

REVISE PER BRG DETAILS

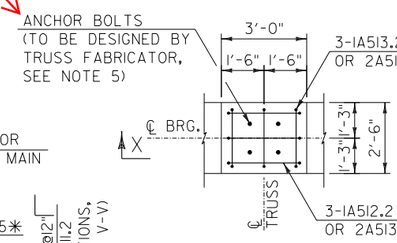

PEDESTAL PLAN

SCALE: 3/8" = 1'-0"

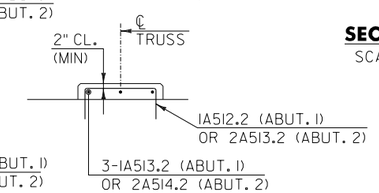

SECTION X–X

SCALE: 3/8" = 1'-0"

NOTE: ADJUST VERTICAL REBAR FOR REVISED SEAT ELEVATIONS.

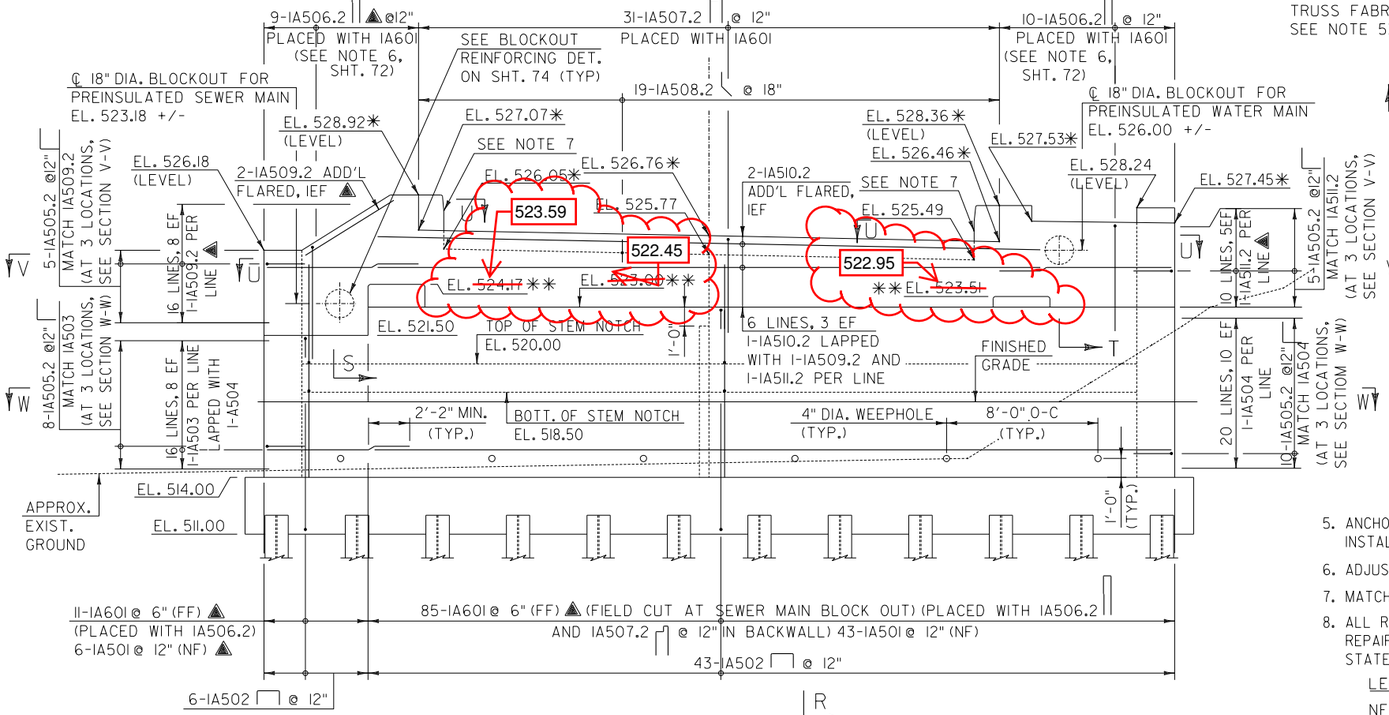

ELEVATION

SCALE: 1/4" = 1'-0"

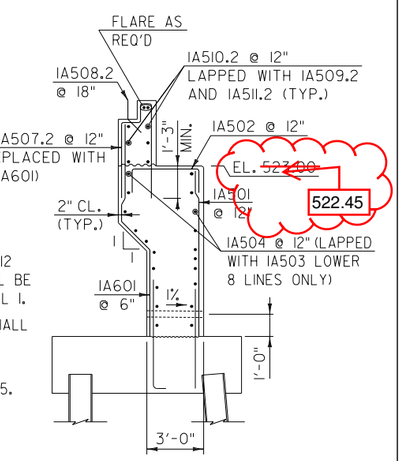

SECTION R–R

SCALE: 1/4" = 1'-0"

NOTES:

1. ELEVATIONS APPLY AT FRONT FACE. TOP OF CONCRETE SHALL BE SLOPED TO MATCH ROADWAY PROFILE.
2. ALL SUBSTRUCTURE CONCRETE SHALL BE HIGH PERFORMANCE CLASS B AND SHALL BE PAID FOR UNDER ITEM 501.34 CONCRETE, HIGH PERFORMANCE CLASS B.
3. ALL REINFORCING ABOVE THE BRIDGE SEAT (MARK SUFFIX .2) SHALL HAVE LEVEL II CORROSION PROTECTION AND SHALL BE PAID FOR UNDER ITEM 507.12 REINFORCING STEEL, LEVEL II. ALL OTHER SUBSTRUCTURE REINFORCING SHALL BE PLAIN AND SHALL BE PAID FOR UNDER ITEM 507.11 REINFORCING STEEL, LEVEL I.
4. FOOTINGS, DECK & CURBS SHALL HAVE 3" CL. AND ALL OTHER LOCATIONS SHALL HAVE 2" CL. UNLESS OTHERWISE SHOWN ON PLANS.
5. ANCHOR BOLT SIZE AND PATTERN TO BE DETERMINED BY TRUSS FABRICATOR. INSTALLATION SHALL BE IN ACCORDANCE WITH STANDARD SPECIFICATION SUBSECTION 531.05.
6. ADJUST 1A506.2, 2A506.2, OR 2A507.2 SPACING AT WATER AND SEWER MAIN.
7. MATCH 10:1 TAPER FOR CURB AS SHOWN ON SHEET 79.
8. ALL REINFORCING STEEL, LEVEL II DAMAGED IN THE FIELD SHALL BE REPLACED OR REPAIRED TO THE SATISFACTION OF THE ENGINEER AT NO ADDITIONAL COST TO THE STATE OF VERMONT.

LEGEND

NF = NEAR FACE
FF = FAR FACE
EF = EACH FACE
▲ = CUT IN FIELD
EST = ESTIMATED QUANTITY

SCALE 1/4" = 1'-0 (1 0 2 4 6)

SCALE 3/8" = 1'-0 (1 0 1 2 3 4)

CHA

ABUTMENT 1 PLAN AND DETAILS

PROJECT NAME: RUTLAND CITY
PROJECT NUMBER: BRF 3000 (19)

FST REV, 9-17-15

PROJECT LEADER: M.D.S.
DESIGNED BY: D.M.D.
DWG. NO.:

PLOT DATE: 7/1/2014
DRAWN BY: D.M.D.
CHECKED BY: P.M.P.
SHEET 72 OF 245

FILE NAME = V:\Projects\ANY\K2\20615\CADD\MSTN\08_096\consultants\z08_096abutment1.dgn
DATE/TIME = 7/1/2014
USER = 4161

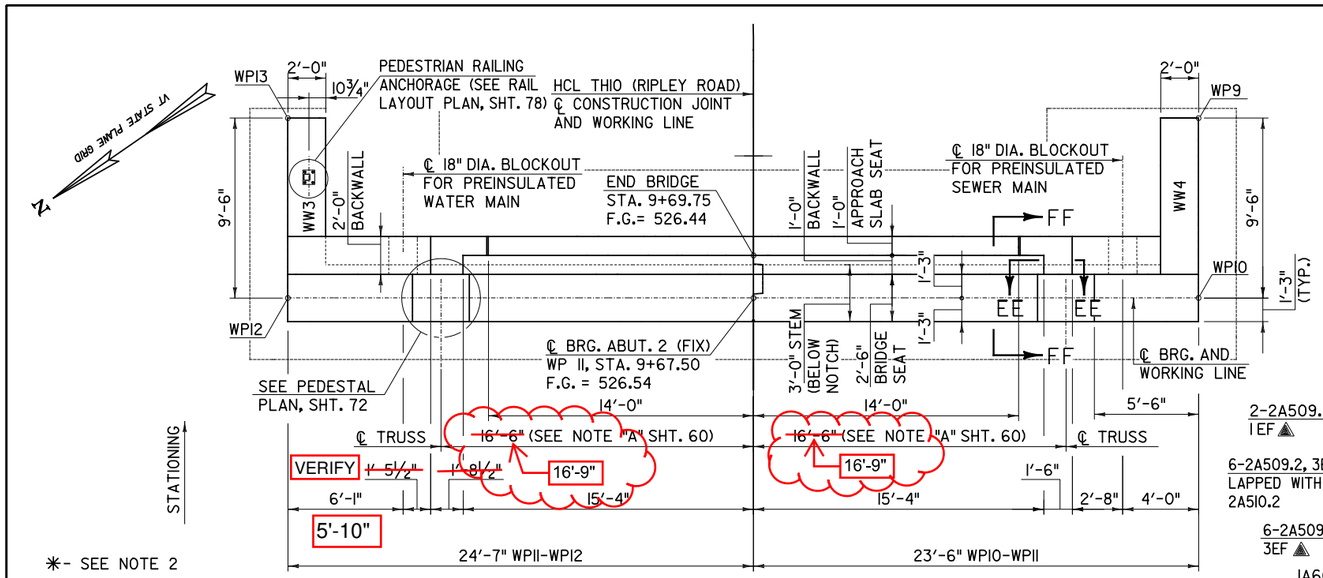

PLAN
SCALE: 1/4" = 1'-0"

✳- SEE NOTE 2

✳✳- ELEVATIONS ARE ASSUMED AND MAY REQUIRE REVISION AFTER PREFABRICATED TRUSS IS SELECTED. IT IS CONTRACTOR'S RESPONSIBILITY TO PROVIDE CURRENT ELEVATIONS AND REVISE REINFORCEMENT DETAILS (IF NECESSARY) AT NO ADDITIONAL COST TO THE STATE OF VERMONT.

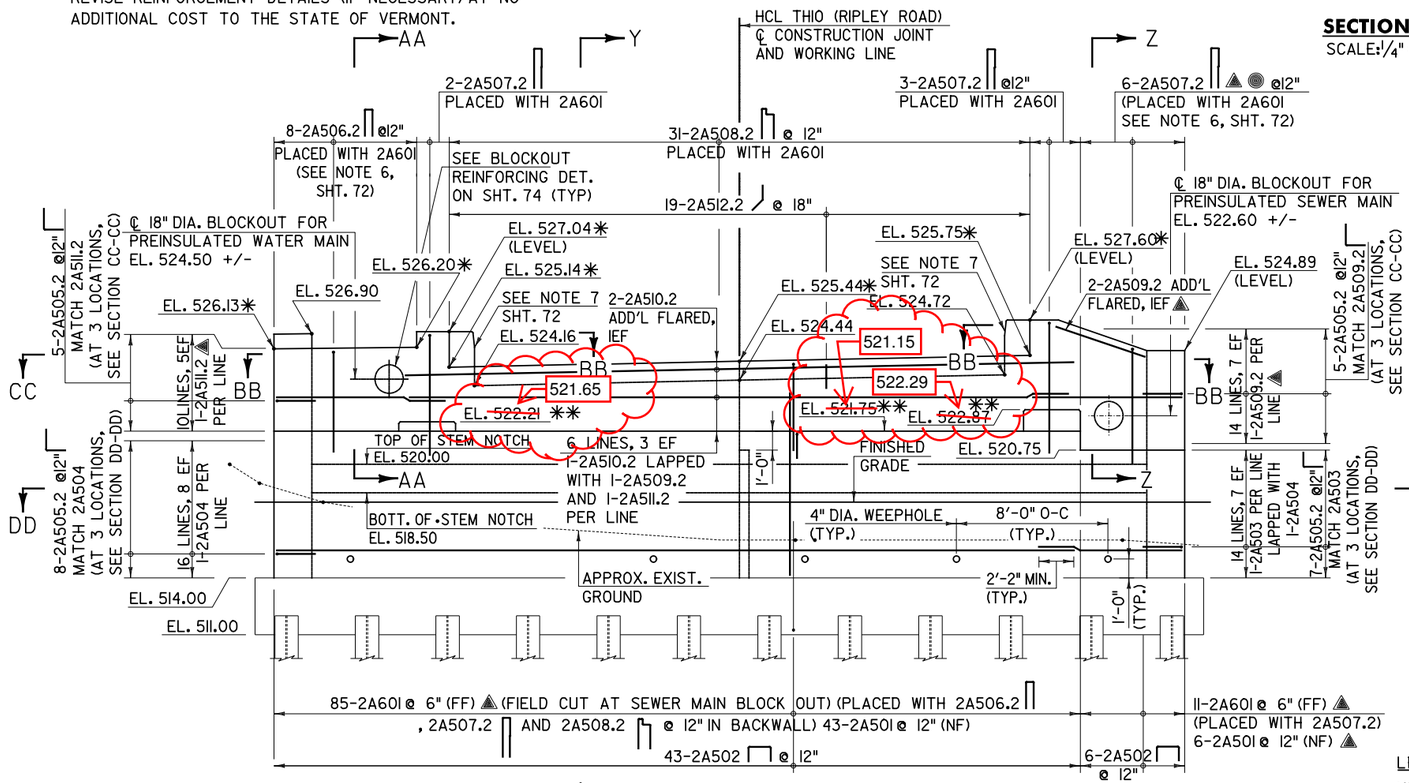

ELEVATION
SCALE: 1/4" = 1'-0"

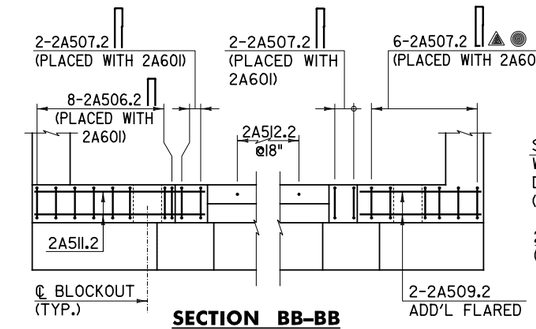

SECTION BB-BB
SCALE: 1/4" = 1'-0"

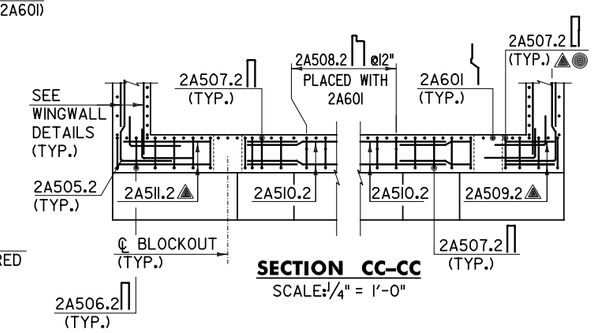

SECTION CC-CC
SCALE: 1/4" = 1'-0"

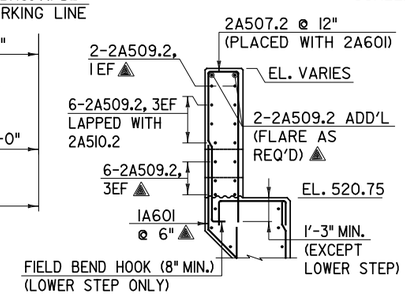

SECTION Z-Z
SCALE: 1/4" = 1'-0"

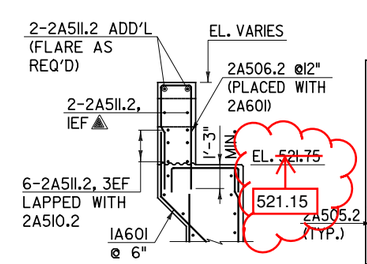

SECTION AA-AA
SCALE: 1/4" = 1'-0"

NOTE: ADJUST VERTICAL REBAR FOR REVISED SEAT ELEVATIONS.

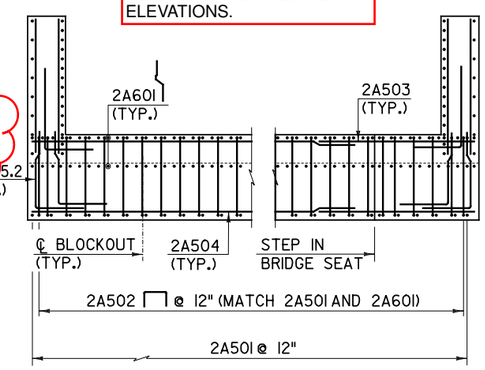

SECTION DD-DD
SCALE: 1/4" = 1'-0"

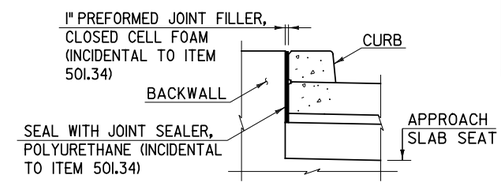

SECTION EE-EE
(ABUT 2 SHOWN, ABUT. 1 SIMILAR)
SCALE: 1/4" = 1'-0"

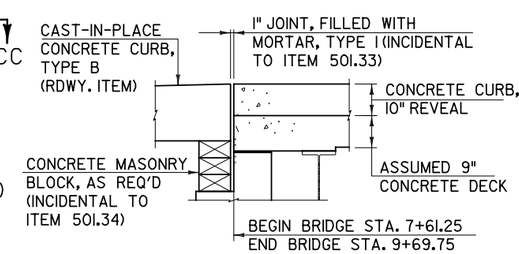

SECTION FF-FF
(ABUT. 2 SHOWN, ABUT. 1 SIMILAR)
SCALE: 1/2" = 1'-0"

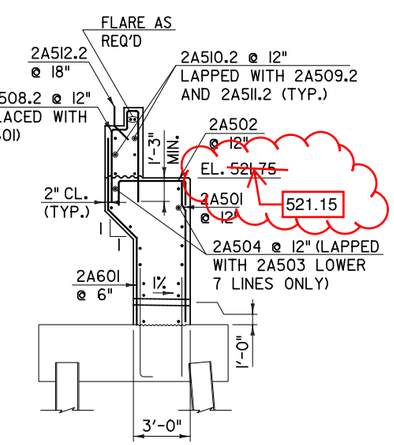

SECTION Y-Y
SCALE: 1/4" = 1'-0"

NOTES:

1. SEE SHT. 72 FOR ADDITIONAL NOTES THAT APPLY TO BOTH ABUTMENTS 1 AND 2.
2. ELEVATIONS APPLY AT FRONT FACE. TOP OF CONCRETE SHALL BE SLOPED TO MATCH ROADWAY PROFILE.

LEGEND

NF = NEAR FACE
FF = FAR FACE
EF = EACH FACE
▲ = CUT IN FIELD
◉ = BEND IN FIELD
EST = ESTIMATED QUANTITY

SCALE 1/4" = 1'-0 (1 0 2 4 6)

SCALE 1/2" = 1'-0 (1 0 1 2)

CHA

ABUTMENT 2 PLAN AND DETAILS

PROJECT NAME: RUTLAND CITY
PROJECT NUMBER: BRF 3000 (19)

FST REV, 9-17-15

PROJECT LEADER: M.D.S.
DESIGNED BY: D.M.D.
DWG. NO.:

PLOT DATE: 6/30/2014
DRAWN BY: D.M.D.
CHECKED BY: P.M.P.
SHEET 73 OF 245

FILE NAME = V:\Projects\ANY\K2\20615\CADD\MSTN\08_096\consultants\z08_096abutment2.dgn
DATE/TIME = 6/30/2014
USER = 4916

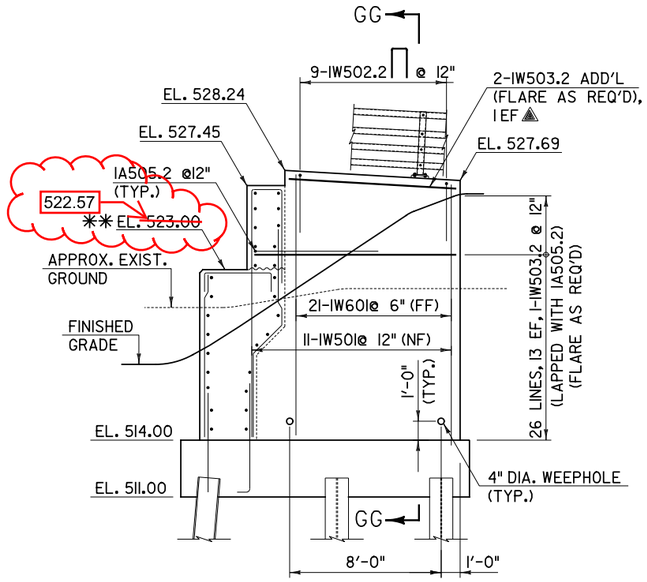

WINGWALL 1 ELEVATION
SCALE 1/4" = 1'-0
1 0 2 4 6

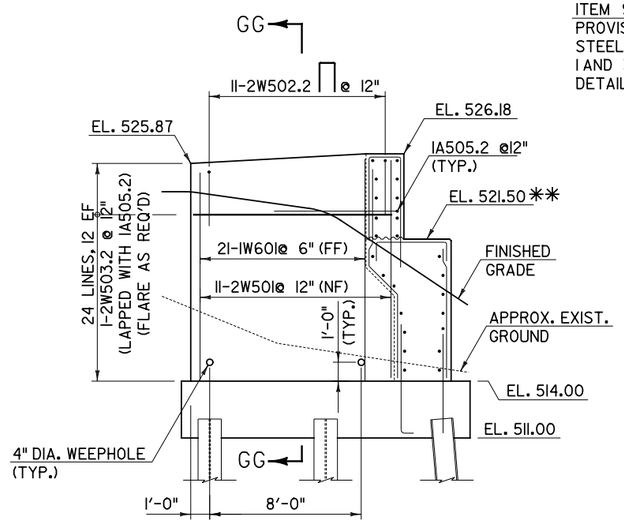

WINGWALL 2 ELEVATION
SCALE 1/4" = 1'-0
1 0 2 4 6

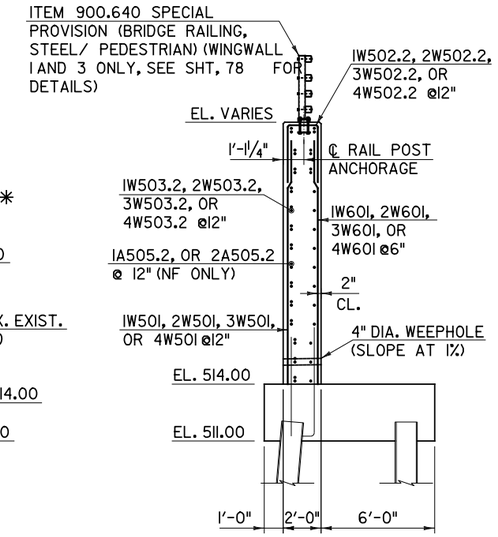

SECTION GG-GG
SCALE 1/4" = 1'-0
1 0 2 4 6

NOTES:

1. ALL SUBSTRUCTURE CONCRETE SHALL BE HIGH PERFORMANCE CLASS B AND SHALL BE PAID FOR UNDER ITEM 501.34 CONCRETE, HIGH PERFORMANCE CLASS B.
2. HORIZONTAL WINGWALL REINFORCING WHICH PENETRATES THE BACKWALL ABOVE THE BRIDGE SEAT (MARK SUFFIX .2) SHALL HAVE LEVEL II CORROSION PROTECTION AND SHALL BE PAID FOR UNDER ITEM 507.12 REINFORCING STEEL, LEVEL II. ALL OTHER WINGWALL REINFORCING SHALL BE PLAIN AND SHALL BE PAID FOR UNDER ITEM 507.11 REINFORCING STEEL, LEVEL I.
3. 2" CL. FOR WINGWALLS EXCEPT 3" CL. IN FOOTINGS.

** - ELEVATIONS ARE ASSUMED AND MAY REQUIRE REVISION AFTER PREFABRICATED TRUSS IS SELECTED. IT IS CONTRACTOR'S RESPONSIBILITY TO PROVIDE CURRENT ELEVATIONS AND REVISE REINFORCEMENT DETAILS (IF NECESSARY) AT NO ADDITIONAL COST TO THE STATE OF VERMONT.

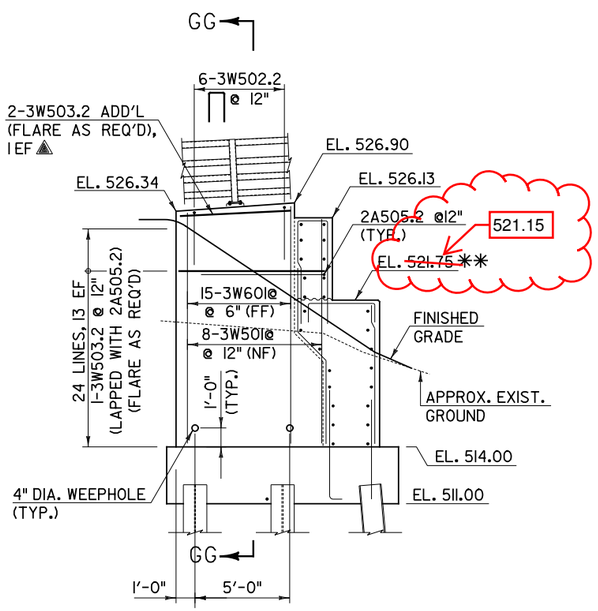

WINGWALL 3 ELEVATION
SCALE 1/4" = 1'-0
1 0 2 4 6

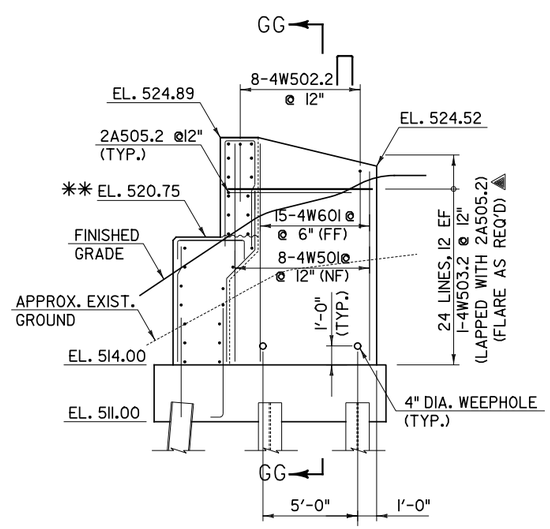

WINGWALL 4 ELEVATION
SCALE 1/4" = 1'-0
1 0 2 4 6

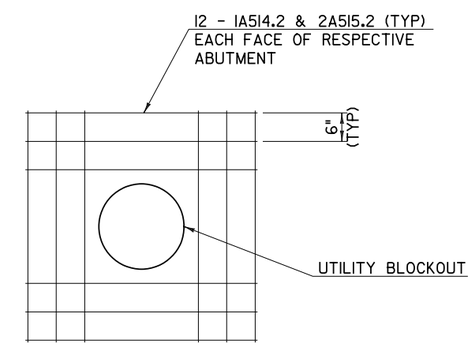

BLOCKOUT REINFORCING DETAIL
NOT TO SCALE

LEGEND

NF = NEAR FACE
FF = FAR FACE
EF = EACH FACE
▲ = CUT IN FIELD
EST = ESTIMATED QUANTITY

CHA

WINGWALL DETAILS	PROJECT NAME: RUTLAND CITY PROJECT NUMBER: BRF 3000 (19)	FST REV, 9-17-15
	PROJECT LEADER: M.D.S. DESIGNED BY: D.M.D. DWG. NO.:	PLOT DATE: 6/30/2014 DRAWN BY: D.M.D. CHECKED BY: P.M.P. SHEET 74 OF 245

FILE NAME = V:\Projects\ANY\K2\20615\CADD\MSTN\08_096\consultants\z08_096wingwalldetails.dgn
DATE/TIME = 6/30/2014
USER = 4916

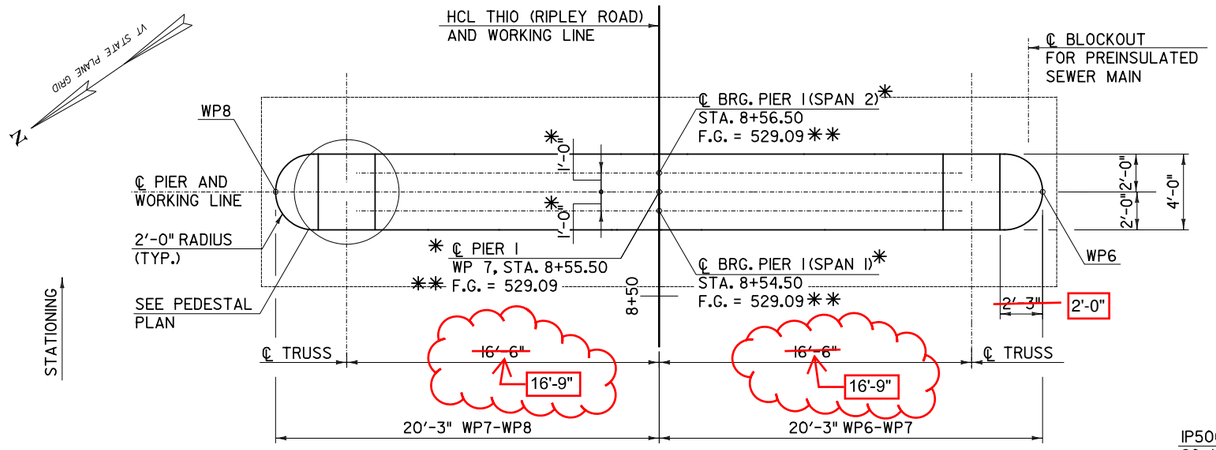

PLAN

SCALE: 1/4" = 1'-0"

✱- SEE NOTE "A" SHT. 60.

✱✱- ELEVATIONS ARE ASSUMED AND MAY REQUIRE REVISION AFTER PREFABRICATED TRUSS IS SELECTED. IT IS CONTRACTOR'S RESPONSIBILITY TO PROVIDE CURRENT ELEVATIONS AND REVISE REINFORCEMENT DETAILS (IF NECESSARY) AT NO ADDITIONAL COST TO THE STATE OF VERMONT.

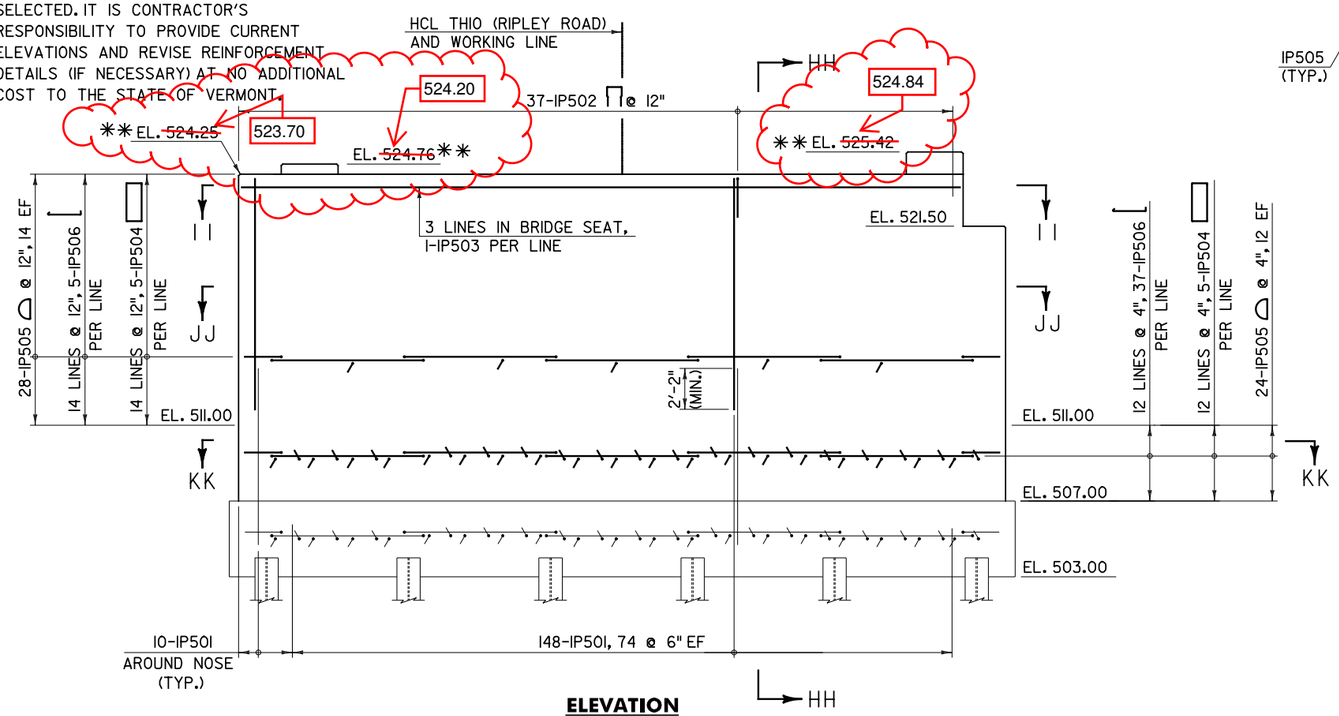

ELEVATION

SCALE: 1/4" = 1'-0"

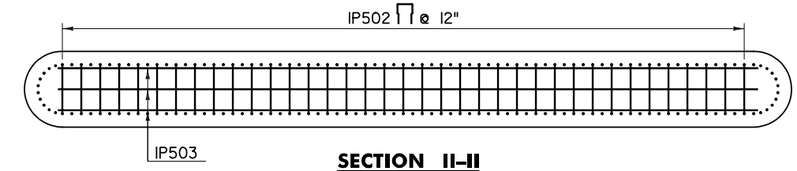

SECTION II-II

SCALE: 1/4" = 1'-0"

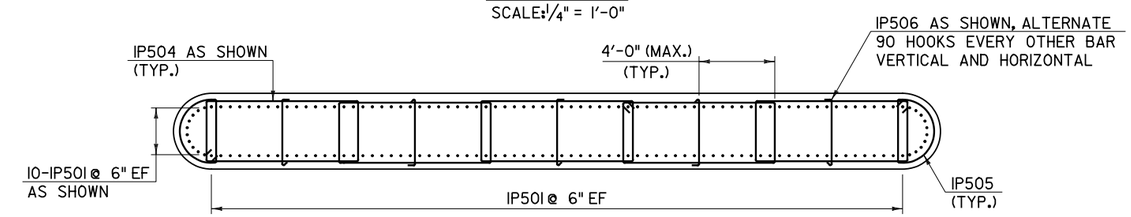

SECTION JJ-JJ

SCALE: 1/4" = 1'-0"

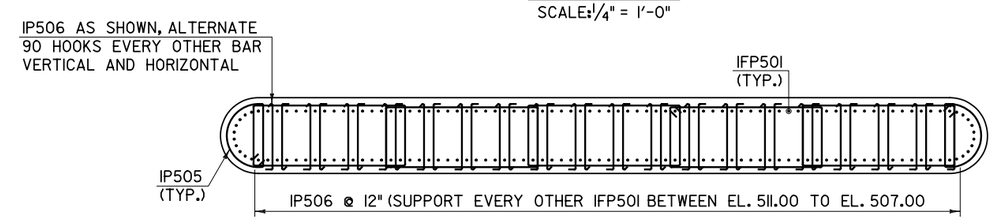

SECTION KK-KK

SCALE: 1/4" = 1'-0"

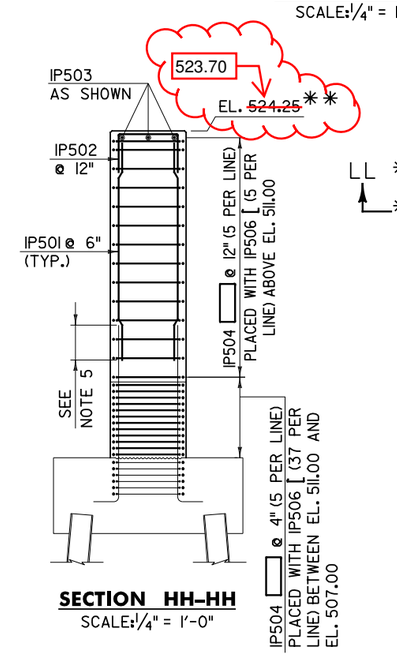

SECTION HH-HH

SCALE: 1/4" = 1'-0"

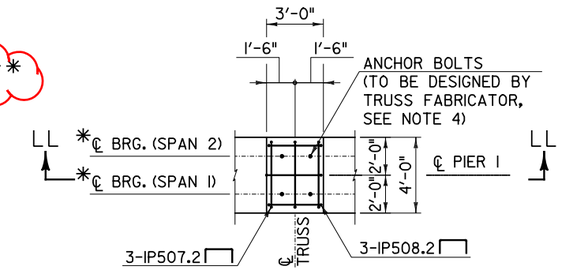

PEDESTAL PLAN

(TWO LOCATIONS)
SCALE: 1/4" = 1'-0"

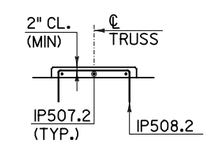

SECTION LL-LL

SCALE: 1/4" = 1'-0"

NOTES:

1. ALL SUBSTRUCTURE CONCRETE SHALL BE HIGH PERFORMANCE CLASS B AND SHALL BE PAID FOR UNDER ITEM 501.34 CONCRETE, HIGH PERFORMANCE CLASS B.
2. ALL REINFORCING ABOVE THE BRIDGE SEAT (MARK SUFFIX .2) SHALL BE STAINLESS CLAD AND SHALL BE PAID FOR UNDER ITEM 507.12 REINFORCING STEEL, LEVEL II. ALL OTHER SUBSTRUCTURE REINFORCING SHALL BE PLAIN AND SHALL BE PAID FOR UNDER ITEM 507.11 REINFORCING STEEL, LEVEL I.
3. 2" CL. FOR PIERS, EXCEPT 3" CL. FOR FOOTINGS.
4. ANCHOR BOLT SIZE AND PATTERN TO BE DETERMINED BY TRUSS FABRICATOR. INSTALLATION SHALL BE IN ACCORDANCE WITH STANDARD SPECIFICATION SUBSECTION 531.05.
5. LAP SPLICES OF LONGITUDINAL REINFORCING WILL NOT BE PERMITTED BELOW EL. 511.00. FP501 AND IP501 HAVE BEEN DETAILED ACCORDINGLY.

SCALE 1/4" = 1'-0
1 0 2 4 6

LEGEND

NF = NEAR FACE
FF = FAR FACE
EF = EACH FACE
▲ = CUT IN FIELD
EST = ESTIMATED QUANTITY

CHA

PIER 1 PLAN AND DETAILS

PROJECT NAME: RUTLAND CITY
PROJECT NUMBER: BRF 3000 (19)

FST REV, 9-17-15

PROJECT LEADER: M.D.S.
DESIGNED BY: D.M.D.
DWG. NO.:

PLOT DATE: 6/30/2014
DRAWN BY: D.M.D.
CHECKED BY: P.M.P.
SHEET 75 OF 245

FILE NAME = V:\Projects\ANY\K2\20615\CADD\MSTN\08_@96\consultants\z08_@96pier1.dgn
DATE/TIME = 6/30/2014
USER = 4916

GENERAL NOTES

CONSTRUCTION SPECIFICATIONS

1. ALL MATERIAL AND WORKMANSHIP TO BE IN ACCORDANCE WITH THE STATE OF VERMONT AGENCY OF TRANSPORTATION STANDARD SPECIFICATIONS FOR CONSTRUCTION DATED 2006 WITH LATEST REVISIONS AND THE AASHTO LRFD BRIDGE CONSTRUCTION SPECIFICATIONS FOR HIGHWAY BRIDGES 4th EDITION WITH INTERIMS THROUGH 2010.

2. THE PREFABRICATED STEEL TRUSS BRIDGE FOR THIS PROJECT SHALL MEET THE SPECIFICATION REQUIREMENTS FOR ITEM 900.645 SPECIAL PROVISIONS (PREFABRICATED TRUSS BRIDGE). THE TRUSS SHALL BE DESIGNED, DETAILED, FABRICATED AND TRANSPORTED TO THE SITE AND ERECTED BY THE FABRICATOR/CONTRACTOR.

MATERIAL SPECIFICATIONS

1. ALL STEEL SHALL BE AASHTO M270 GRADE 50 AND SHALL BE GALVANIZED PER SUBSECTION 506.15.
2. MATERIAL NOTED "T2" OR CVN ON DETAIL DRAWINGS SHALL BE CHARPY V-NOTCH TESTED IN ACCORDANCE WITH THE REQUIREMENTS OF VERMONT STANDARD SPECIFICATIONS SECTION 714.01.

3. MATERIAL NOTED "F2" OR FCM (FRACTURE CRITICAL MEMBERS) ON DETAIL DRAWINGS SHALL MEET THE FOLLOWING CONSTRUCTION AND TESTING REQUIREMENTS:

   A. ALL FRACTURE CRITICAL MEMBERS SHALL BE FABRICATED ACCORDING TO SECTION 12 OF THE AASHTO/AWS D1.5 BRIDGE WELDING CODE.

   B. ALL FRACTURE CRITICAL MEMBERS SHALL BE FABRICATED IN A PLANT HAVING AN AISC FRACTURE CRITICAL ENDORSEMENT OR THE FABRICATOR SHALL PROVIDE TO THE STRUCTURES ENGINEER AN ACCEPTABLE FRACTURE CONTROL PLAN MEETING THE REQUIREMENTS OF AASHTO/AWS D1.5, PRIOR TO FABRICATION.

   C. ALL FRACTURE CRITICAL MEMBERS SHALL BE IMPACT TESTED TO THE FRACTURE CRITICAL REQUIREMENTS AS SPECIFIED IN AASHTO M270.

4. HIGH STRENGTH BOLTS: ASTM A325 TYPE 1 GALVANIZED PER SECTION 506 (UN).
   NUTS SHALL BE A563 GRADE DH GALVANIZED.
   LOAD INDICATOR WASHERS (LIW) SHALL BE USED AS THE METHOD FOR PRETENSIONING ALL BOLTED TRUSS CONNECTIONS.
   BOLTS & NUTS SHALL BE ROTATIONAL CAPACITY TESTED.
   DO NOT MIX NUTS & BOLTS FROM DIFFERENT CONTAINERS UNLESS ALL BOLTS & NUTS HAVE THE SAME LOT NUMBER.

FABRICATION

1. ALL HOLES SHALL BE DRILLED FULL SIZE (UN).

2. NO FIELD DRILLING, REAMING, OR CUTTING OF TRUSS OR CONNECTION MEMBERS.

WELDING

1. ALL WELDING SHALL CONFORM TO THE PROVISIONS OF SUBSECTION 506.10.

2. NON DESTRUCTIVE TESTING OF WELDS SHALL BE IN ACCORDANCE WITH THE REFERENCED SPECIFICATION.

3. SHEAR CONNECTORS FOR FLOORBEAMS & SIDEWALK TOP STRUTS SHALL BE ATTACHED IN THE SHOP, PRIOR TO GALVANIZING. WELDING AND INSPECTION OF SHEAR CONNECTORS SHALL CONFORM TO THE PROVISIONS OF SECTION 508.

4. SEE DETAIL "WT1" ON THIS DRAWING FOR WELD TERMINATION DETAIL.

5. THE FOLLOWING CASCO WELDING PROCEDURES SHALL BE USED:

WELD DESCRIPTION	MAT'L GRADE	WP	CASCO WELD PROC.
FLOOR BEAM STIFFENER TO WEB FILLET WELDING	M270 GR50	**WP1**	250
FLOOR BEAM STIFFENER TO FLANGE FILLET WELDING	M270 GR50	**WP2**	470 or 480
ALL OTHER FILLET WELDS	M270 GR50	**WP3**	470 or 610

SURFACE PREPARATION

1. PRIOR TO GALVANIZING, ALL CORNERS AND EDGES OF STEEL PLATES, SHAPES, ETC., SHALL BE GROUND TO A 1/16" RADIUS.

2. ALL STEEL TO BE GALVANIZED SHALL BE CLEANED TO BE AT LEAST EQUIVALENT TO SURFACE PREPARATION GRADE SSPC-SP8, UNLESS OTHERWISE APPROVED BY THE ENGINEER.

GALVANIZING

1. ALL STEEL SHALL BE HOT DIP GALVANIZED IN ACCORDANCE WITH SUBSECTION 506.15.

2. ALL FAYING SURFACES SHALL BE HAND WIRE BRUSHED, OR BRUSH BLASTED, AFTER GALVANIZING TO ACHIEVE AN AASHTO CLASS C SURFACE CONDITION. NO MECHANICAL OR POWER BRUSHING ALLOWED.

3. BOLT HOLES SHALL BE CLEANED OF GALVANIZATION TO RE-ESTABLISH 15/16" DIA. HOLE.

4. NO FIELD GALVANIZING PERMITTED.

PAINTING

1. ALL STEEL SHALL BE PAINTED AFTER GALVANIZING. PAINT SYSTEM SHALL BE DETERMINED.

FIELD CONNECTIONS

1. ALL FIELD CONNECTIONS SHALL BE MADE WITH 7/8" DIAMETER HIGH STRENGTH A325 TYPE 1 GALVANIZED BOLTS (UN), INSTALLED PER SECTION 506.19(c).

2. BOLTS SHALL HAVE A HEAVY HEX HEAD, ONE HEAVY HEX NUT, ONE LOAD INDICATOR WASHER (LIW), AND AT LEAST ONE FLAT WASHER EACH. WASHER TO BE PLACED UNDER TURNED ELEMENT. SEE "TYPICAL BOLT DETAIL" ON THIS DRAWING.

3. PIECE MARKS WILL BE LOCATED AS SHOWN ON ERECTION DRAWINGS.

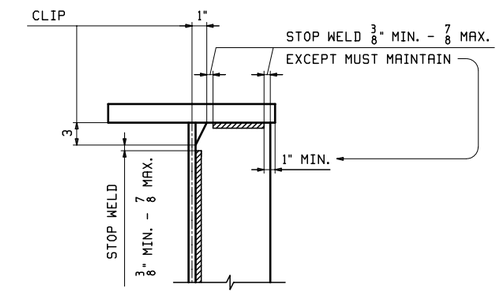

DETAIL "WT1"

STIFFENER WELD TERMINATION

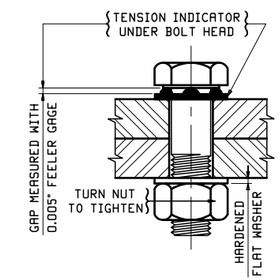

TYPICAL BOLT DETAIL

NOTE TO ENGINEER:
THESE NOTES ARE NOT INTENDED TO BE ALL INCLUSIVE AND COMPLIANCE WITH RELEVANT SPECIFICATIONS REMAIN UNCHANGED.

REV.	DATE	REMARKS	DWN	CHK	APVL	SHOP
0						

MATERIAL: | SURFACE PREP. & PAINT: | HOLES: | SHOP BOLTS:

DESCRIPTION: GENERAL NOTES

CASCO BAY STEEL STRUCTURES, INC.
1 WALLACE AVE. SOUTH PORTLAND, ME 04106
PHONE (207) 780-6722 FAX. (207) 780-6726
TENSOR 3285

STRUCTURE: TH-10 OVER OTTER CREEK PONY TRUSS BRIDGE

DRAWN: RB	DATE: 10/7/15		
CHKD: WJL	DATE: 10/16/15		
LOCATION: RUTLAND CITY, VERMONT	JOB NO.	DWG NO.	
PROJ NO. BRF 3000 (19)	598	GN1	
CUSTOMER: KUBRICKY CONSTRUCTION CORP.		REV. △	

RB Fri, Oct 16, 2015 02:21:54 PM /users/jobs/3285/GN1.Rev0

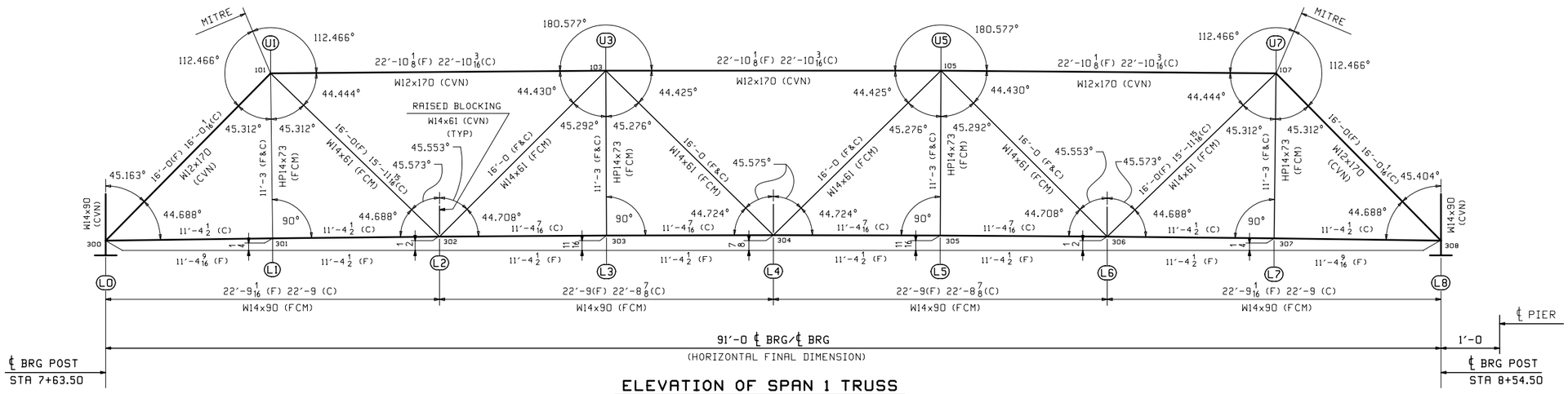

ELEVATION OF SPAN 1 TRUSS

(TRUSS T2 POINTS = T1 POINTS + 100)

(SOUTH TRUSS T1 SHOWN)

(ANGLES & DIMENSIONS FOR NORTH TRUSS T2 ARE THE SAME)

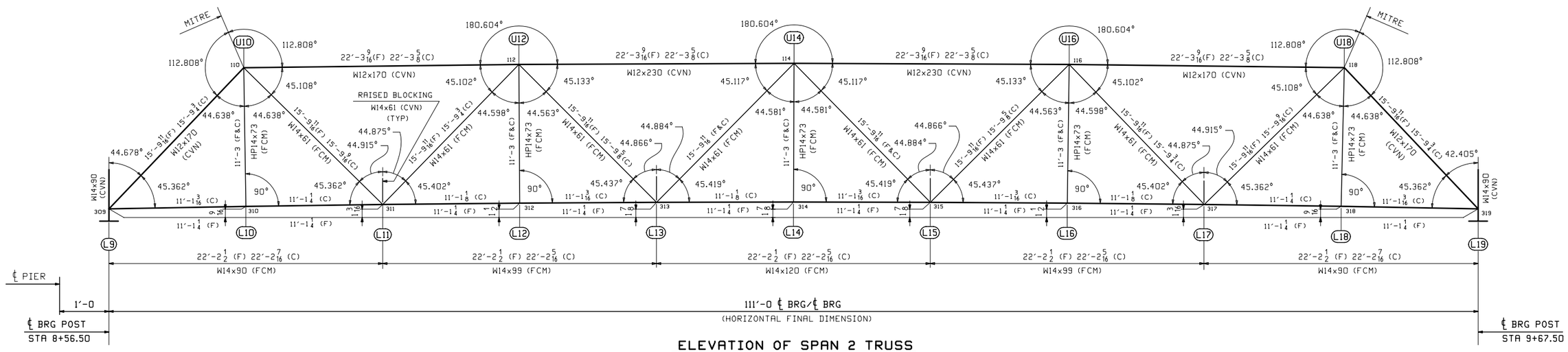

ELEVATION OF SPAN 2 TRUSS

(TRUSS T2 POINTS = T1 POINTS + 100)

(SOUTH TRUSS T1 SHOWN)

(ANGLES & DIMENSIONS FOR NORTH TRUSS T2 ARE THE SAME)

** NOTE **
THE PURPOSE OF THIS DRAWING IS TO COORDINATE GEOMETRIC CONTROL INFORMATION. THIS DWG IS SUBMITTED FOR INFORMATION ONLY AND IS NOT INTENDED FOR SHOP FABRICATION.

NOTES:

1. TRUSS DETAILS SHALL BE BASED ON CAMBERED GEOMETRIC ANGLES AND CAMBERED LENGTHS. CAMBERED LENGTHS ARE NOTED (C), FINAL LENGTHS (F). FINAL LENGTHS ARE SHOWN FOR REFERENCE ONLY, AND SHOULD NOT BE USED FOR DETAILING.
2. ALL TRUSS MEMBER MATERIAL SHALL BE M270-50 W/ FCM & CVN AS NOTED. FRACTURE CRITICAL MEMBERS ARE NOTED (FCM). CHARPY MEMBERS ARE NOTES (CVN).
3. WORK THIS DWG. WITH DWG. WS2 & WS3.

REV.	DATE	REMARKS	DWN	CHK	APVL	SHOP
0						

MATERIAL: | SURFACE PREP. & PAINT: | HOLES: | SHOP BOLTS:

DESCRIPTION: TRUSS ELEVATION

CASCO BAY STEEL STRUCTURES, INC.
1 WALLACE AVE. SOUTH PORTLAND, ME 04106
PHONE (207) 780-6722 FAX. (207) 780-6726
TENSOR 3285

STRUCTURE: TH-10 OVER OTTER CREEK PONY TRUSS BRIDGE		DRAWN: RB	DATE: 9/25/15
		CHKD: WL	DATE: 9/29/15
LOCATION: RUTLAND CITY, VERMONT		JOB NO.	DWG NO.
PROJ NO. BRF 3000 (19)		598	WS1
CUSTOMER: KUBRICKY CONSTRUCTION CORP.			REV. △

RB Thu, Oct 8, 2015 10:10:39 AM /users/jobs/3285/WS1.Rev0

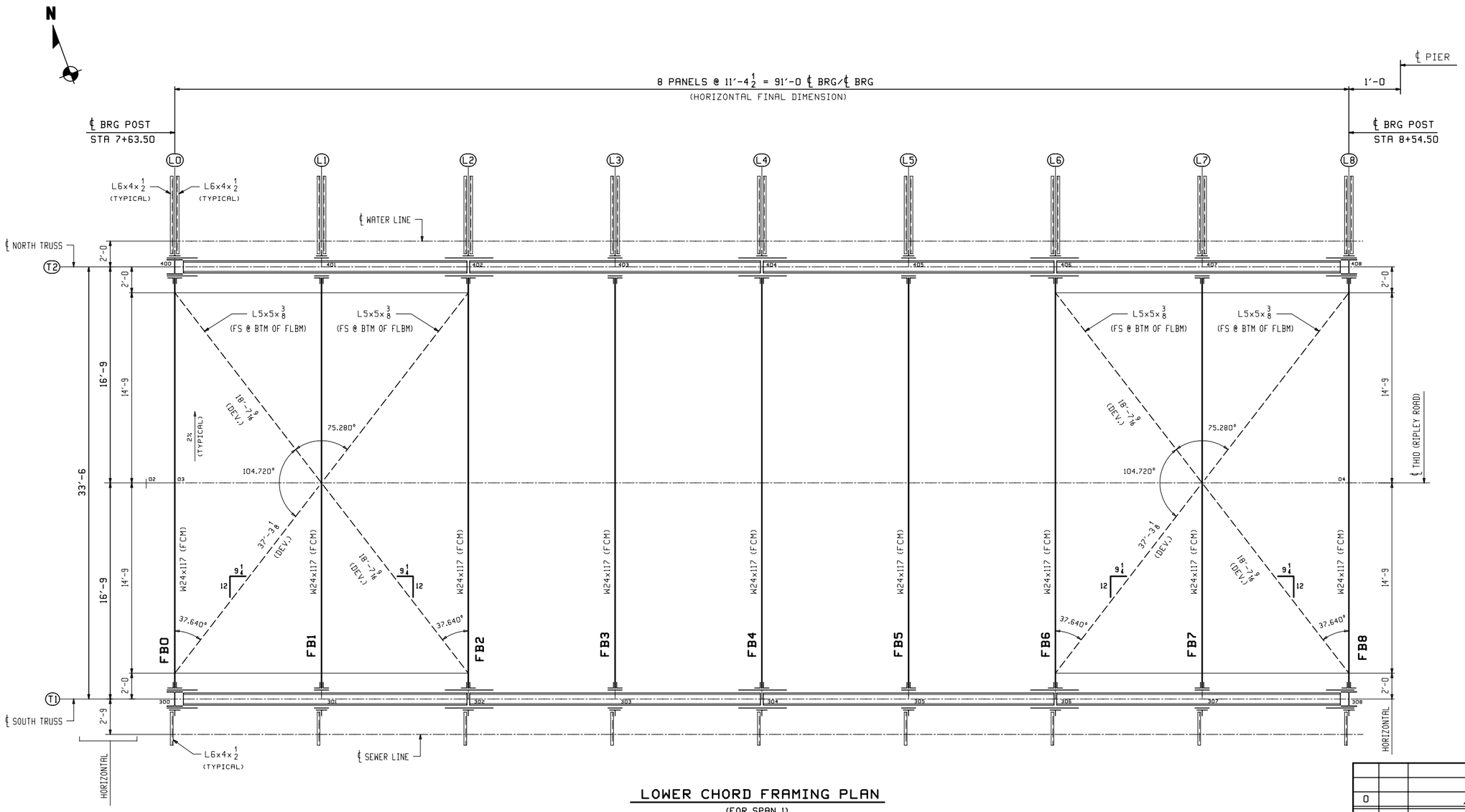

LOWER CHORD FRAMING PLAN

(FOR SPAN 1)

** NOTE **
THE PURPOSE OF THIS DRAWING IS TO COORDINATE GEOMETRIC CONTROL INFORMATION. THIS DWG IS SUBMITTED FOR INFORMATION ONLY AND IS NOT INTENDED FOR SHOP FABRICATION.

WORK THIS DWG. WITH DWG. WS1 & WS3.

REV.	DATE	REMARKS	DWN	CHK	APVL	SHOP
0						

MATERIAL: | SURFACE PREP. & PAINT: | HOLES: | SHOP BOLTS:

DESCRIPTION: LOWER CHORD FRAMING PLAN (SPAN 1)

CASCO BAY STEEL STRUCTURES, INC.
1 WALLACE AVE.
SOUTH PORTLAND, ME 04106
PHONE (207) 780-6722
FAX. (207) 780-6726
TENSOR 3285

STRUCTURE: TH-10 OVER OTTER CREEK PONY TRUSS BRIDGE	DRAWN: RB	DATE: 9/26/15	
	CHKD: WL	DATE: 9/29/15	
LOCATION: RUTLAND CITY, VERMONT	JOB NO.	DWG NO.	
PROJ NO. BRF 3000 (19)	598	WS2	
CUSTOMER: KUBRICKY CONSTRUCTION CORP.		REV. △	

RB Mon, Oct 5, 2015 01:43:19 PM /users/jobs/3285/WS2 : Rev0

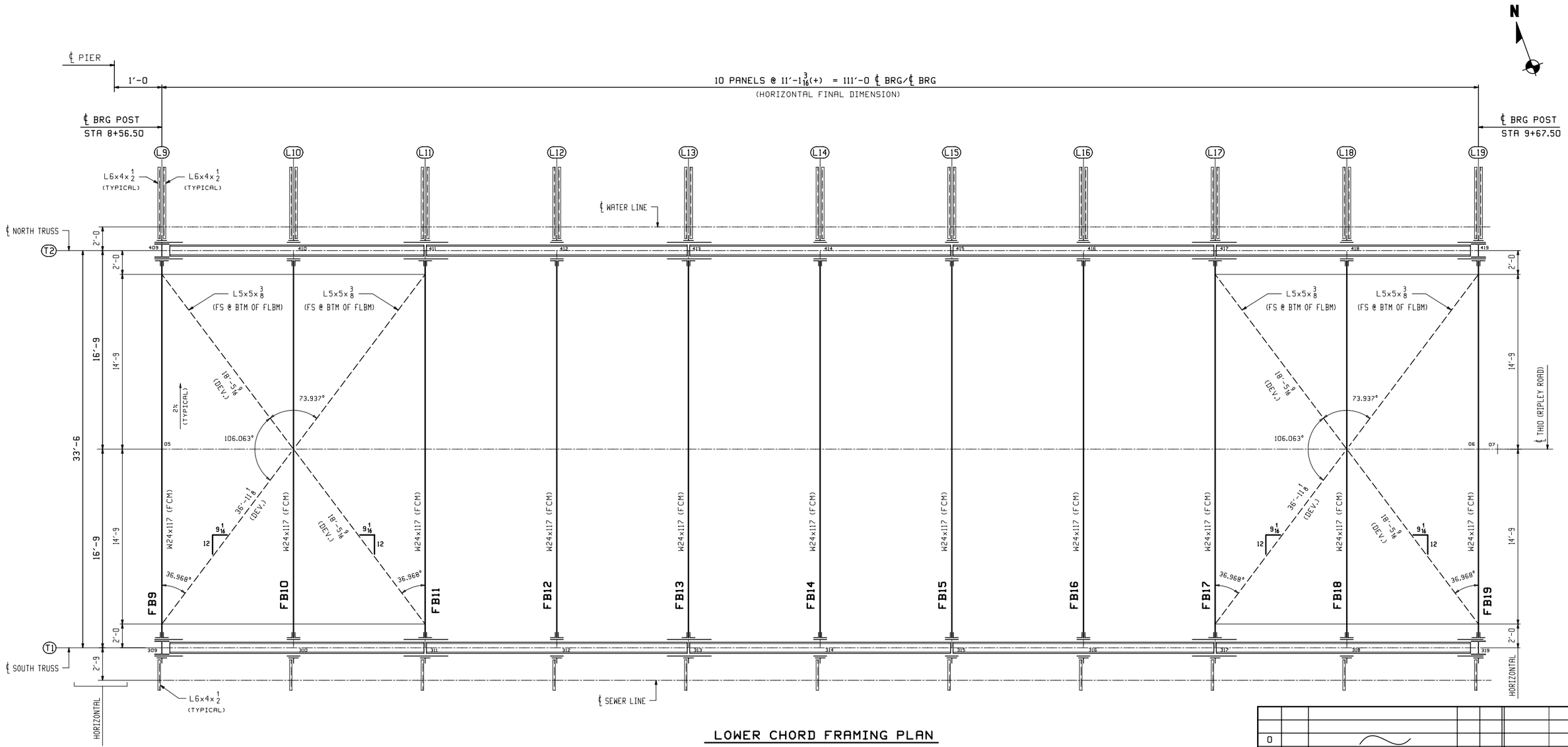

LOWER CHORD FRAMING PLAN

(FOR SPAN 2)

** NOTE **
THE PURPOSE OF THIS DRAWING IS TO COORDINATE GEOMETRIC CONTROL INFORMATION. THIS DWG IS SUBMITTED FOR INFORMATION ONLY AND IS NOT INTENDED FOR SHOP FABRICATION.

WORK THIS DWG. WITH DWG. WS1 & WS2.

REV.	DATE	REMARKS	DWN	CHK	APVL	SHOP
0						

MATERIAL:	SURFACE PREP. & PAINT:	HOLES:	SHOP BOLTS:

DESCRIPTION: LOWER CHORD FRAMING PLAN (SPAN 2)

CASCO BAY STEEL STRUCTURES, INC.
1 WALLACE AVE.
SOUTH PORTLAND, ME 04106
PHONE (207) 780-6722
FAX. (207) 780-6726
TENSOR 3285

STRUCTURE:	TH-10 OVER OTTER CREEK PONY TRUSS BRIDGE	DRAWN: RB	DATE: 9/28/15
		CHKD: WL	DATE: 9/30/15
LOCATION:	RUTLAND CITY, VERMONT	JOB NO.	DWG NO.
PROJ NO.	BRF 3000 (19)	598	WS3
CUSTOMER:	KUBRICKY CONSTRUCTION CORP.		REV. △

RB Mon, Oct 5, 2015 01:01:14 PM /users/jobs/3285/WS3.Rev0

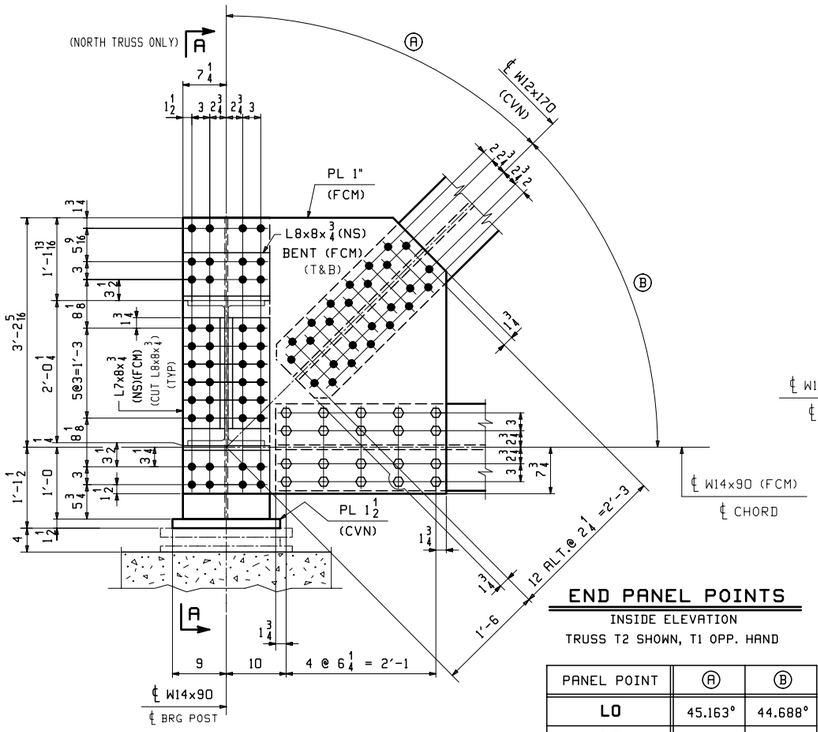

END PANEL POINTS

INSIDE ELEVATION

TRUSS T2 SHOWN, T1 OPP. HAND

PANEL POINT	Ⓐ	Ⓑ
L0	45.163°	44.688°
L8	45.404°	44.688°
L9	44.678°	45.362°
L19	42.405°	45.362°

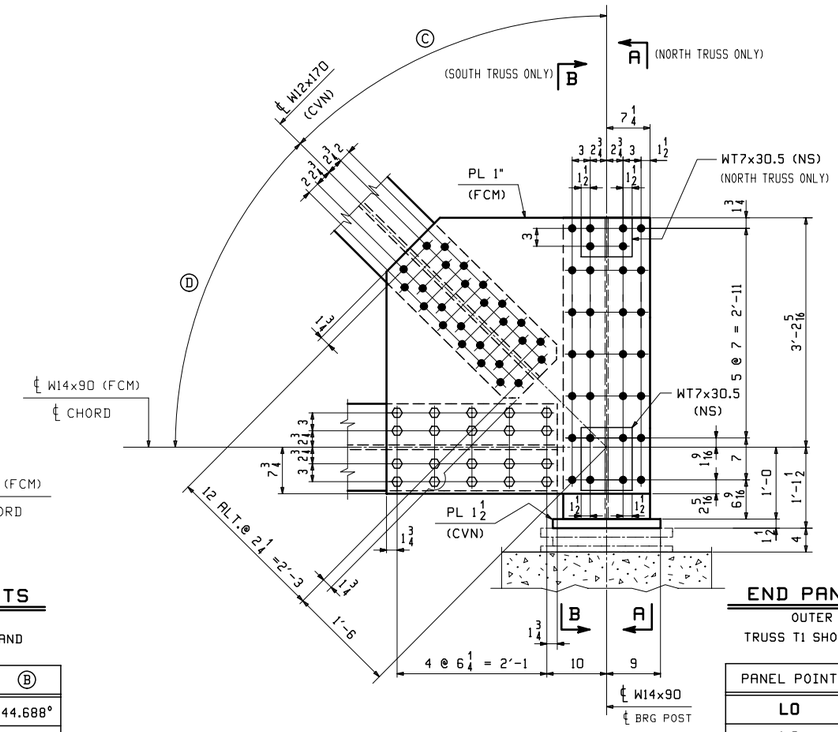

END PANEL POINTS

OUTER ELEVATION

TRUSS T1 SHOWN, T2 OPP. HAND

PANEL POINT	Ⓒ	Ⓓ
L0	45.163°	44.688°
L8	45.404°	44.688°
L9	44.678°	45.362°
L19	42.405°	45.362°

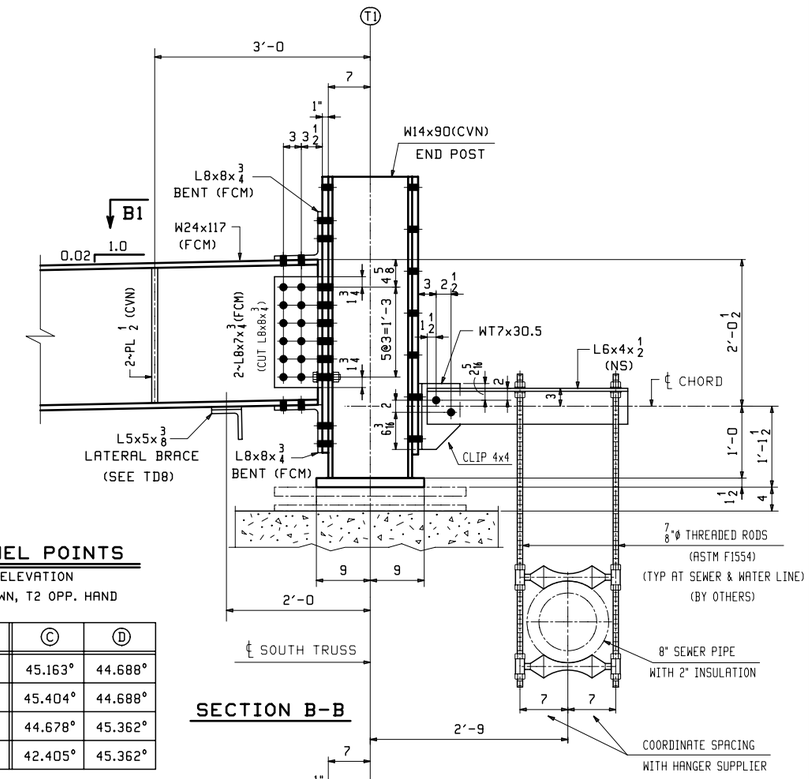

SECTION B-B

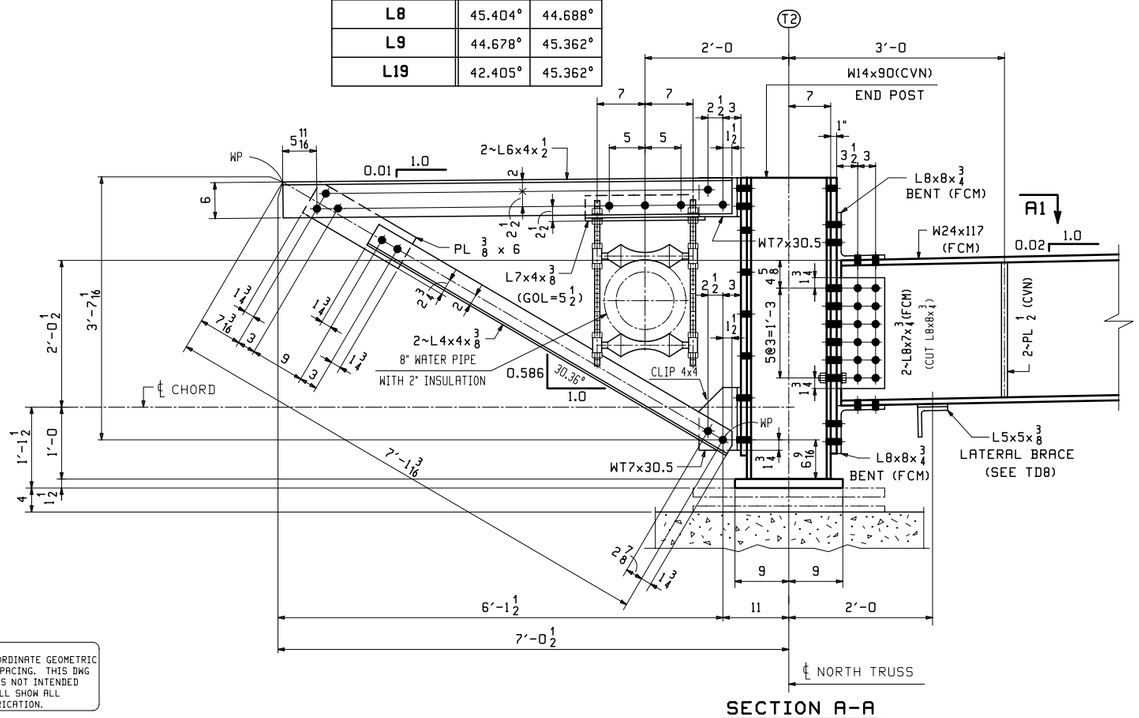

SECTION A-A

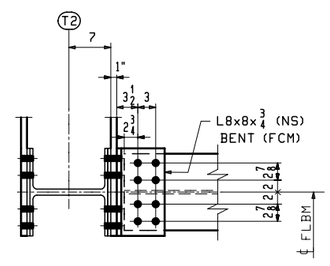

SECTION -A1

(DEVELOPED)

(FLBM TOP FLG SHOWN)

(SECTION @ FLBM BTM FLG SIMILAR)

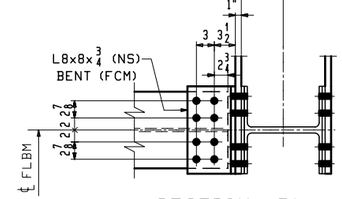

SECTION -B1

(DEVELOPED)

(FLBM TOP FLG SHOWN)

(SECTION @ FLBM BTM FLG SIMILAR)

NOTES:

1. FCM INDICATES FRACTURE CRITICAL MATERIAL, CVN INDICATES CHARPY V-NOTCH TESTED MATERIAL. ALL STEEL (EXCEPT FOR BOLTS) SHALL BE HOT-DIP GALVANIZED AFTER FABRICATION.

2. BOLTS SHALL BE 7/8Ø A325-1 GALV. (UN). ALL BOLTS SHALL BE INSTALLED WITH HEADS EXPOSED TO PUBLIC VIEW WITH ONE HARDENNED WASHER AND ONE DTI WASHER. BOLTS AND WASHERS SHALL BE MECHANICALLY GALVANIZED.

3. DUE TO ROLLING MILL TOLERANCE, THE ACTUAL THICKNESS OF FILL PLATES MAY VARY FROM WHAT IS SHOWN ON THIS DWG. THE SHOP WILL BE RESPONSIBLE FOR ADJUSTING FILL THICKNESS AS REQUIRED TO SUIT THE ACTUAL MATERIAL SIZE. FILL PLATES SHALL BE A SINGLE THICKNESS PLATE.

** NOTE **
THE PURPOSE OF THIS DRAWING IS TO COORDINATE GEOMETRIC CONTROL INFORMATION AND CONNECTION SPACING. THIS DWG IS SUBMITTED FOR INFORMATION ONLY & IS NOT INTENDED FOR SHOP FABRICATION. DETAIL DWGS WILL SHOW ALL WELDING AND DIMENSIONS REQ'D FOR FABRICATION.

REV.	DATE	REMARKS	DWN	CHK	APVL	SHOP
0						

MATERIAL:	SURFACE PREP. & PAINT:	HOLES:	SHOP BOLTS:
M270-50 (UN)	HOT-DIP GALV.	15/16Ø (UN)	7/8Ø (UN)

DESCRIPTION: TRUSS LAYOUT @ L0, L8, L9 & L19

CASCO BAY STEEL STRUCTURES, INC.
1 WALLACE AVE. SOUTH PORTLAND, ME 04106
PHONE (207) 780-6722 FAX. (207) 780-6726
TENSOR 3285

STRUCTURE:	TH-10 OVER OTTER CREEK PONY TRUSS BRIDGE	DRAWN: RB	DATE: 9/28/15
		CHKD: WJL	DATE: 10/13/15
LOCATION:	RUTLAND CITY, VERMONT	JOB NO.	DWG NO.
PROJ NO.	BRF 3000 (19)	598	TD1
CUSTOMER:	KUBRICKY CONSTRUCTION CORP.		REV. △

WJL Fri, Oct 16, 2015 11:55:44 AM J:\Jobs\2015\TD1 & Rev0

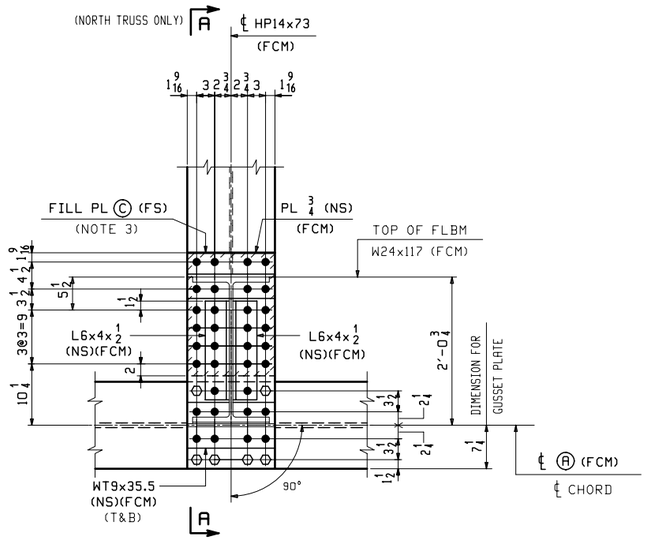

INSIDE ELEVATION

TRUSS T2 SHOWN, T1 OPP. HAND

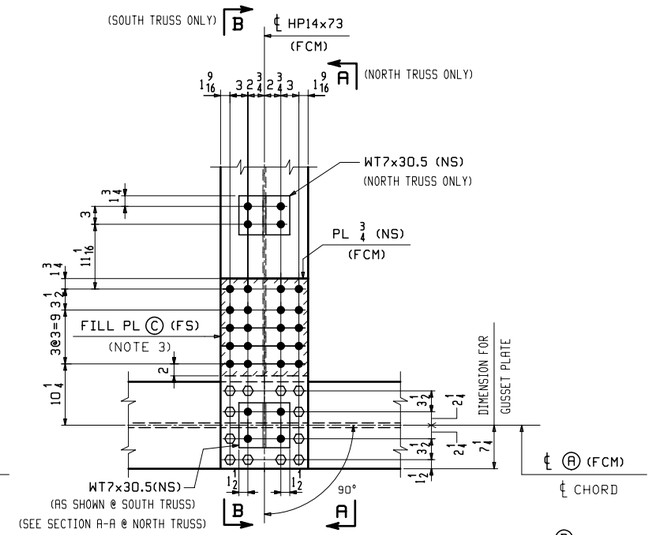

OUTER ELEVATION

TRUSS T1 SHOWN, T2 OPP. HAND & NOTED

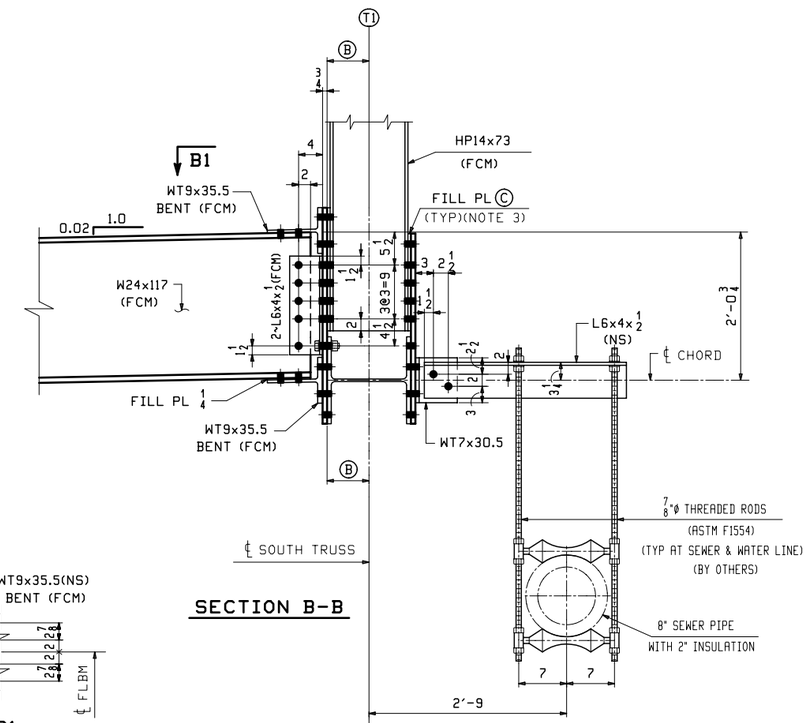

SECTION B-B

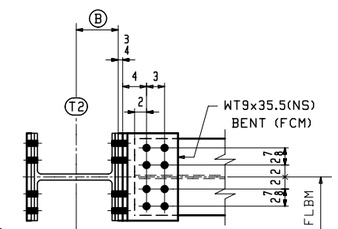

SECTION -A1

(DEVELOPED)
(FLBM TOP FLG SHOWN)
(SECTION @ FLBM BTM FLG SIMILAR)

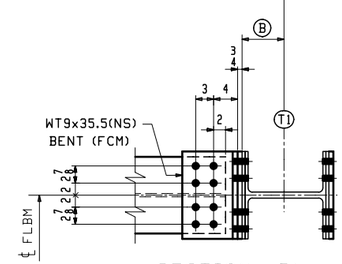

SECTION -B1

(DEVELOPED)
(FLBM TOP FLG SHOWN)
(SECTION @ FLBM BTM FLG SIMILAR)

LOWER CHORD PANEL POINTS @ VERTICALS

PANEL POINT	Ⓐ	Ⓑ	Ⓒ	Ⓓ	Ⓔ	Ⓕ	Ⓖ	Ⓗ
L1,L3,L5,L7,L10,L18	W14x90	7	7 GA (A1011-50)	6'-1 3/4	10 3/4	3'-7 3/16	7'-1 1/2	1 7/8
L12, L16	W14x99	7 1/16	1/4	6'-1 11/16	10 13/16	3'-7 1/8	7'-1 7/16	1 15/16
L14	W14x120	7 1/4	7/16	6'-1 1/2	11	3'-7 1/16	7'-1 3/16	2

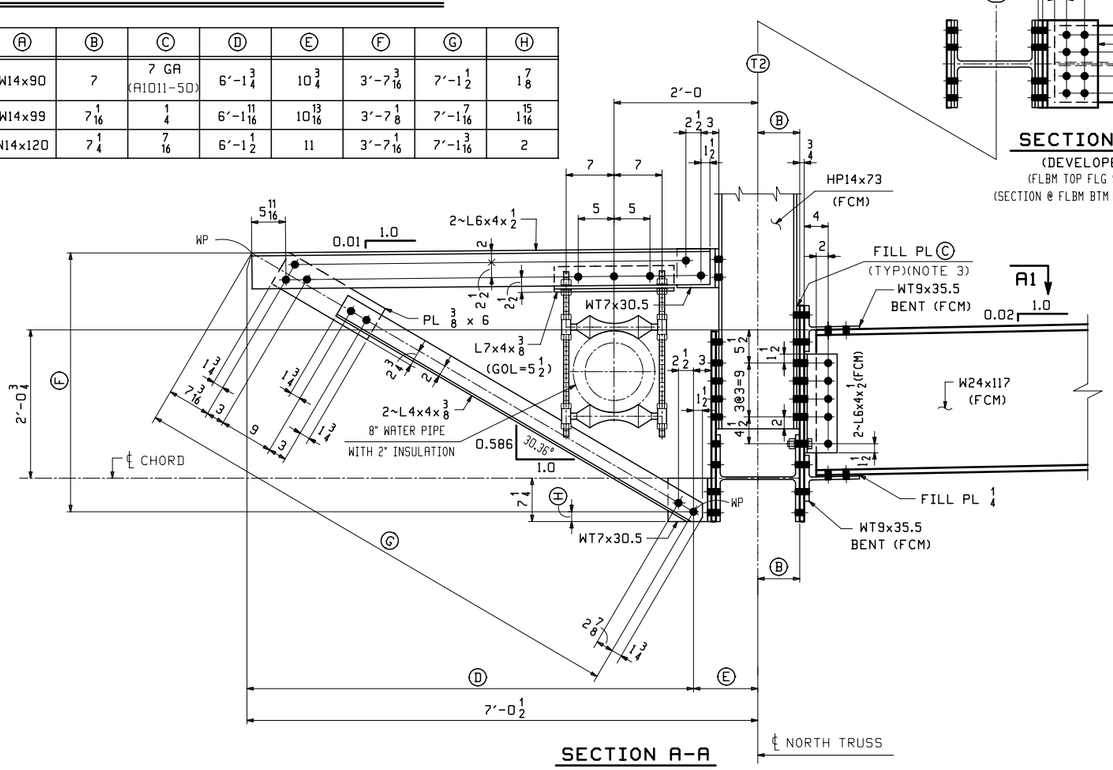

SECTION A-A

NOTES:

1. FCM INDICATES FRACTURE CRITICAL MATERIAL, CVN INDICATES CHARPY V-NOTCH TESTED MATERIAL. ALL STEEL (EXCEPT FOR BOLTS) SHALL BE HOT-DIP GALVANIZED AFTER FABRICATION.
2. BOLTS SHALL BE 7/8Ø A325-1 GALV. (UN). ALL BOLTS SHALL BE INSTALLED WITH HEADS EXPOSED TO PUBLIC VIEW WITH ONE HARDENNED WASHER AND ONE DTI WASHER. BOLTS AND WASHERS SHALL BE MECHANICALLY GALVANIZED.
3. DUE TO ROLLING MILL TOLERANCE, THE ACTUAL THICKNESS OF FILL PLATES MAY VARY FROM WHAT IS SHOWN ON THIS DWG. THE SHOP WILL BE RESPONSIBLE FOR ADJUSTING FILL THICKNESS AS REQUIRED TO SUIT THE ACTUAL MATERIAL SIZE. FILL PLATES SHALL BE A SINGLE THICKNESS PLATE.

** NOTE **
THE PURPOSE OF THIS DRAWING IS TO COORDINATE GEOMETRIC CONTROL INFORMATION AND CONNECTION SPACING. THIS DWG IS SUBMITTED FOR INFORMATION ONLY & IS NOT INTENDED FOR SHOP FABRICATION. DETAIL DWGS WILL SHOW ALL WELDING AND DIMENSIONS REQ'D FOR FABRICATION.

REV.	DATE	REMARKS	DWN	CHK	APVL	SHOP
0						

MATERIAL:	SURFACE PREP. & PAINT:	HOLES:	SHOP BOLTS:
M270-50 (UN)	HOT-DIP GALV.	15/16Ø (UN)	7/8Ø (UN)

DESCRIPTION: TRUSS LAYOUT @ L1,L3,L5,L7,L10,L12,L14,L16,L18

CASCO BAY STEEL STRUCTURES, INC.
1 WALLACE AVE. PHONE (207) 780-6722
SOUTH PORTLAND, ME 04106 FAX. (207) 780-6726
TENSOR 3285

STRUCTURE: TH-10 OVER OTTER CREEK PONY TRUSS BRIDGE		DRAWN: RB	DATE: 9/29/15
		CHKD: WJL	DATE: 10/14/15
LOCATION:	RUTLAND CITY, VERMONT	JOB NO.	DWG NO.
PROJ NO.	BRF 3000 (19)	598	TD2
CUSTOMER:	KUBRICKY CONSTRUCTION CORP.		REV. △

Fri, Oct 16, 2015 12:21:46 PM /users/jobs/3285/TD2 - Rev0

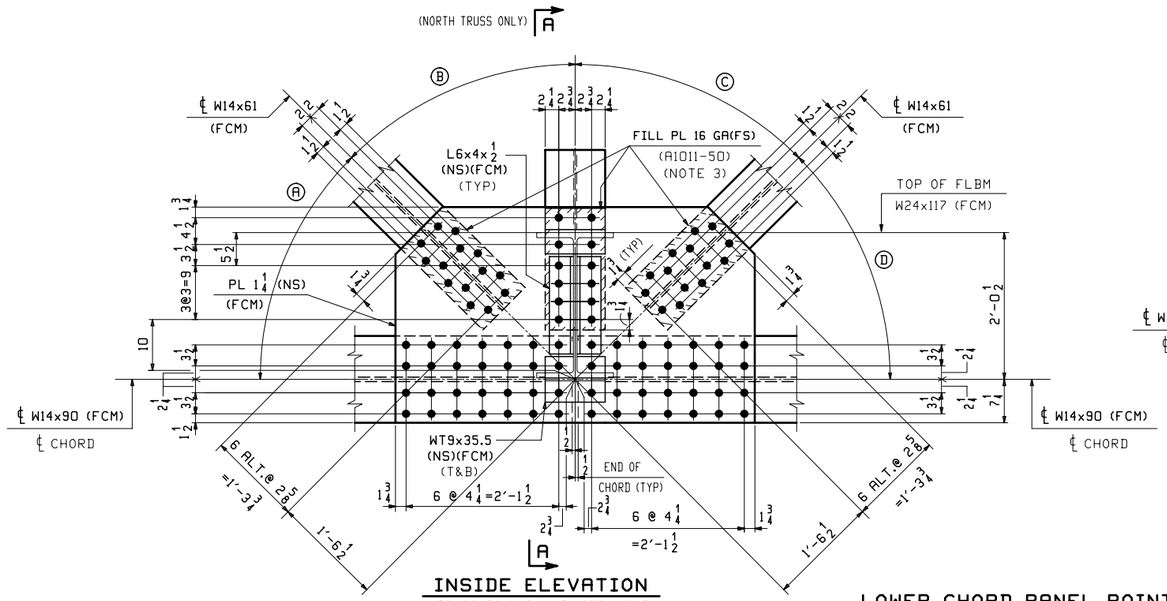

INSIDE ELEVATION

TRUSS T2 SHOWN, T1 OPP. HAND
(LOOKING NORTH)

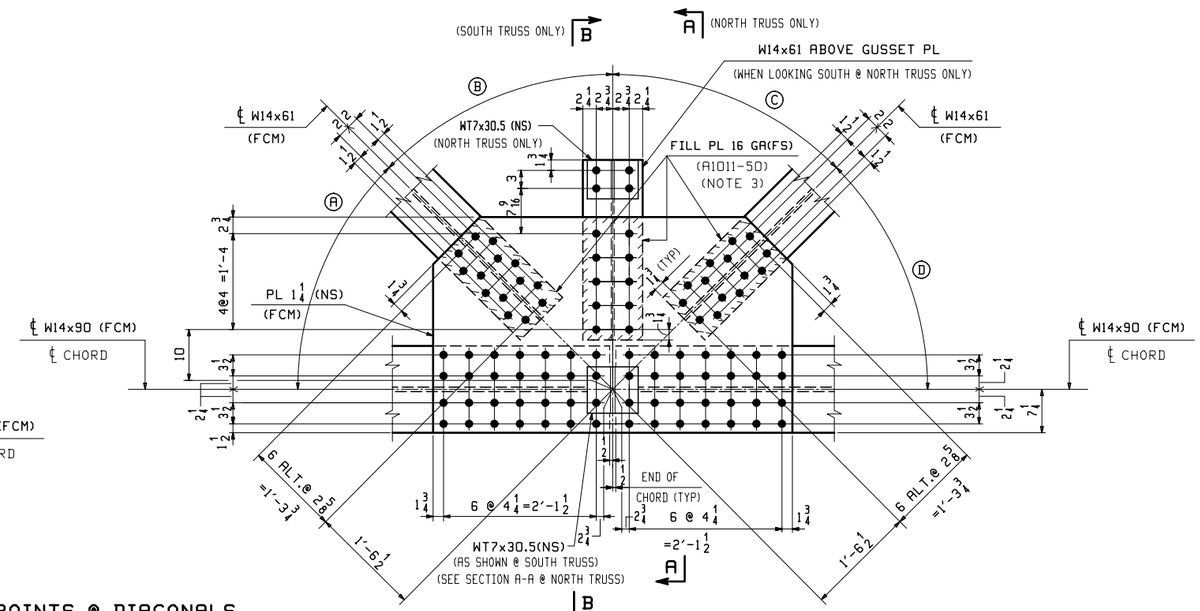

OUTER ELEVATION

TRUSS T1 SHOWN, T2 OPP. HAND & NOTED
(LOOKING NORTH - UN)

LOWER CHORD PANEL POINTS @ DIAGONALS

PANEL POINT	Ⓐ	Ⓑ	Ⓒ	Ⓓ
L2	44.688°	45.573°	45.553°	44.708°
L4	44.724°	45.575°	45.575°	44.724°
L6	44.708°	45.553°	45.573°	44.688°

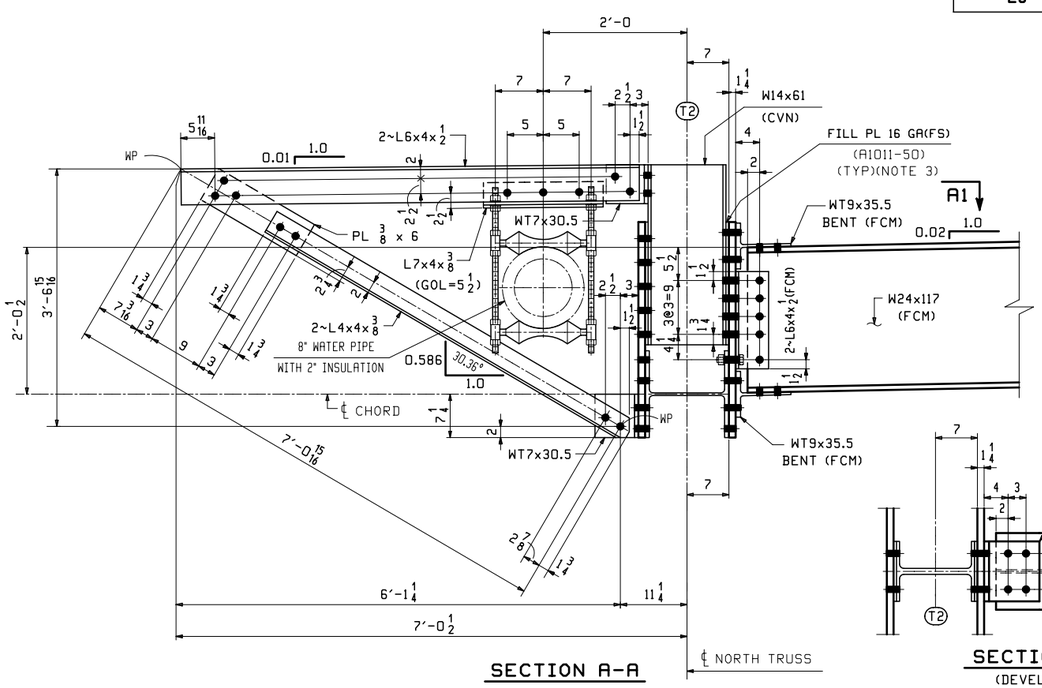

SECTION A-A

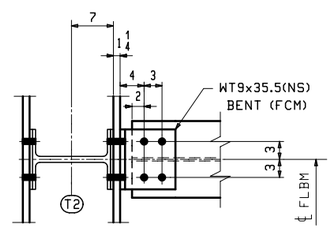

SECTION -A1

(DEVELOPED)
(FLBM TOP FLG SHOWN)
(FLBM BTM FLG SIMILAR)

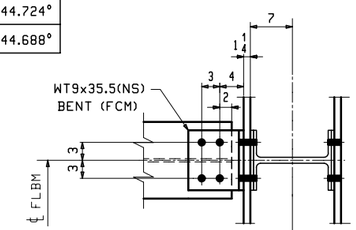

SECTION -B1

(DEVELOPED)
(FLBM TOP FLG SHOWN)
(FLBM BTM FLG SIMILAR)

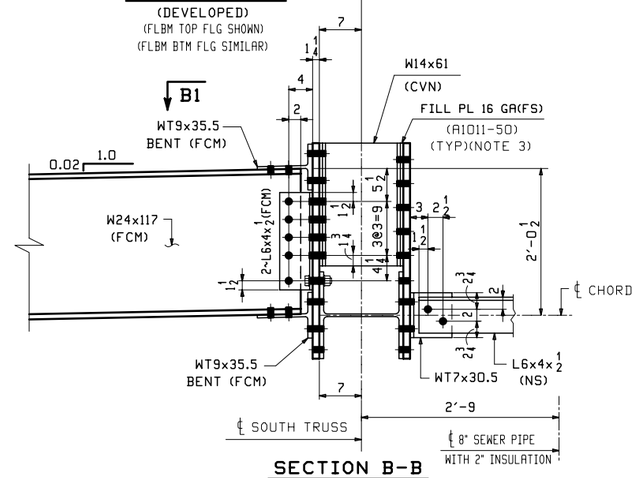

SECTION B-B

** NOTE **
THE PURPOSE OF THIS DRAWING IS TO COORDINATE GEOMETRIC CONTROL INFORMATION AND CONNECTION SPACING. THIS DWG IS SUBMITTED FOR INFORMATION ONLY & IS NOT INTENDED FOR SHOP FABRICATION. DETAIL DWGS WILL SHOW ALL WELDING AND DIMENSIONS REQ'D FOR FABRICATION.

NOTES:

1. FCM INDICATES FRACTURE CRITICAL MATERIAL, CVN INDICATES CHARPY V-NOTCH TESTED MATERIAL. ALL STEEL (EXCEPT FOR BOLTS) SHALL BE HOT-DIP GALVANIZED AFTER FABRICATION.
2. BOLTS SHALL BE 7/8Ø A325-1 GALV. (UN). ALL BOLTS SHALL BE INSTALLED WITH HEADS EXPOSED TO PUBLIC VIEW WITH ONE HARDENNED WASHER AND ONE DTI WASHER. BOLTS AND WASHERS SHALL BE MECHANICALLY GALVANIZED.
3. DUE TO ROLLING MILL TOLERANCE, THE ACTUAL THICKNESS OF FILL PLATES MAY VARY FROM WHAT IS SHOWN ON THIS DWG. THE SHOP WILL BE RESPONSIBLE FOR ADJUSTING FILL THICKNESS AS REQUIRED TO SUIT THE ACTUAL MATERIAL SIZE. FILL PLATES SHALL BE A SINGLE THICKNESS PLATE.

REV.	DATE	REMARKS	DWN	CHK	APVL	SHOP
0						

MATERIAL:	SURFACE PREP. & PAINT:	HOLES:	SHOP BOLTS:
M270-50 (UN)	HOT-DIP GALV.	15/16Ø (UN)	7/8Ø (UN)

DESCRIPTION: TRUSS LAYOUT @ L2, L4 & L6

CASCO BAY STEEL STRUCTURES, INC.
1 WALLACE AVE. SOUTH PORTLAND, ME 04106
PHONE (207) 780-6722 FAX. (207) 780-6726
TENSOR 3285

STRUCTURE:	TH-10 OVER OTTER CREEK PONY TRUSS BRIDGE	DRAWN: RB	DATE: 9/30/15
		CHKD: WJL	DATE: 10/14/15
LOCATION:	RUTLAND CITY, VERMONT	JOB NO.	DWG NO.
PROJ NO.	BRF 3000 (19)	598	TD3
CUSTOMER:	KUBRICKY CONSTRUCTION CORP.		REV. △

RB Fri, Oct 16, 2015 12:25:18 PM /users/jake/3285/TD3.Rev0

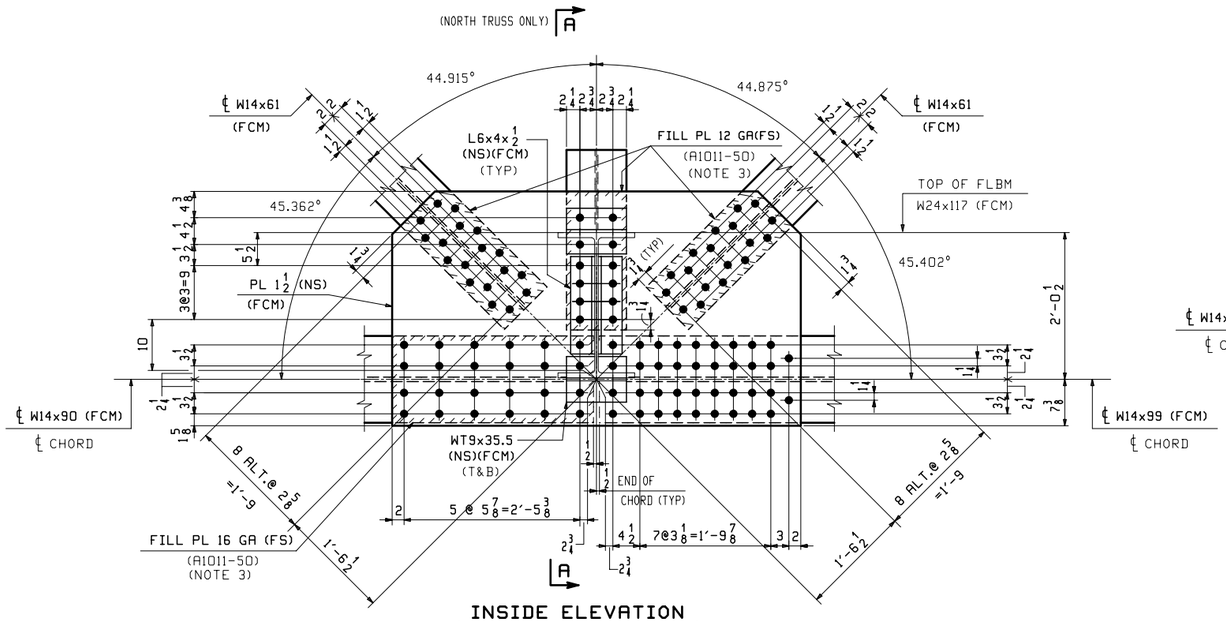

INSIDE ELEVATION

TRUSS T2 SHOWN, T1 OPP. HAND
(LOOKING NORTH)

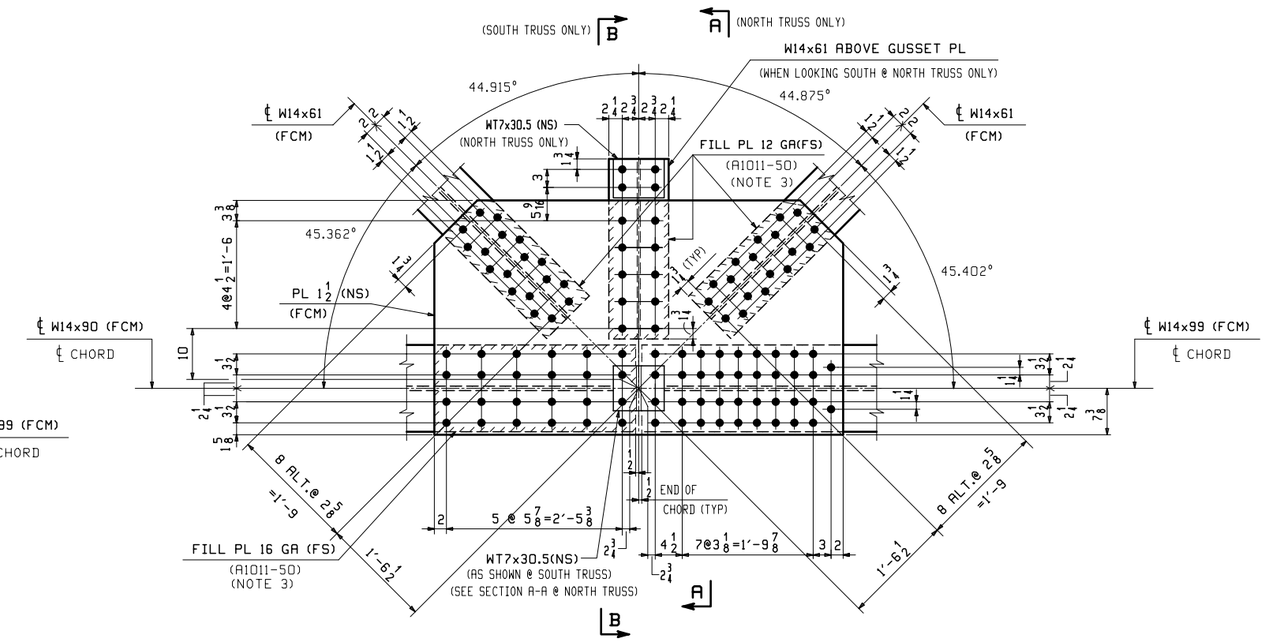

OUTER ELEVATION

TRUSS T1 SHOWN, T2 OPP. HAND & NOTED
(LOOKING NORTH - UN)

LOWER CHORD PANEL POINTS L11 & L17

(DETAILS FOR L11 ARE SHOWN)
(DETAILS FOR L17 ARE OPP. HAND)

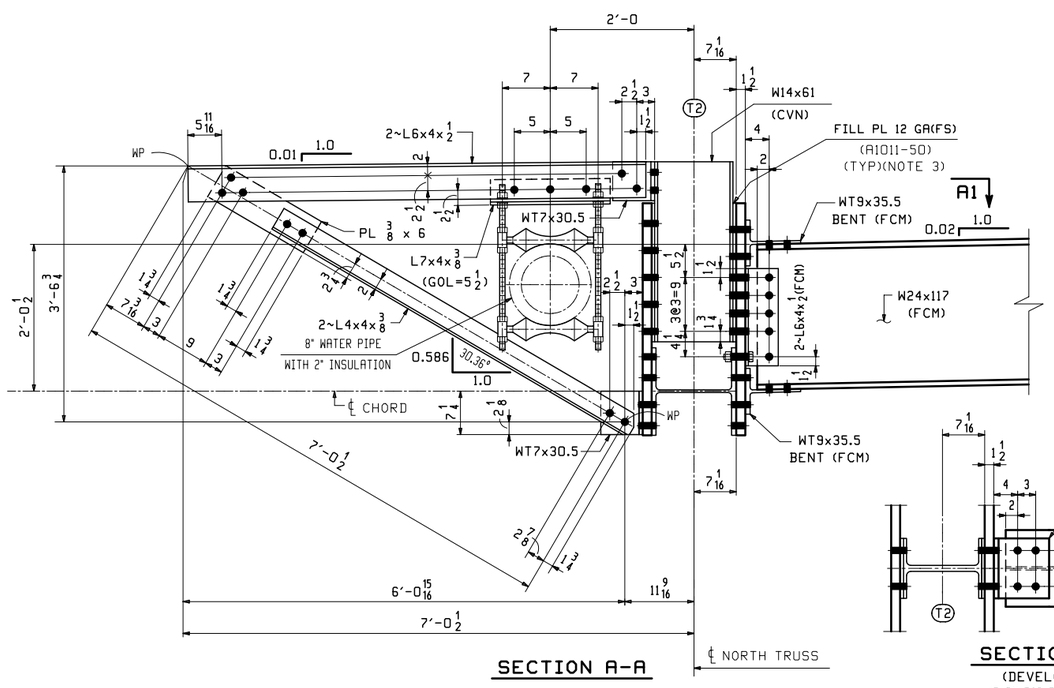

SECTION A-A

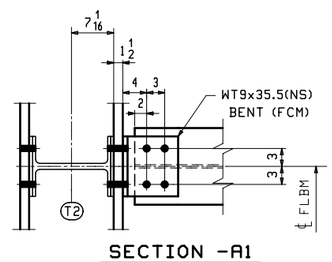

SECTION -A1

(DEVELOPED)
(FLBM TOP FLG SHOWN)
(FLBM BTM FLG SIMILAR)

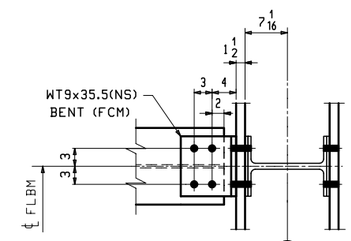

SECTION -B1

(DEVELOPED)
(FLBM TOP FLG SHOWN)
(FLBM BTM FLG SIMILAR)

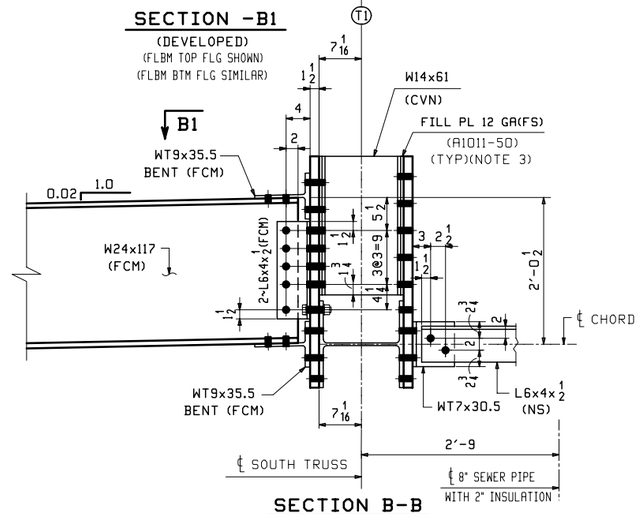

SECTION B-B

** NOTE **
THE PURPOSE OF THIS DRAWING IS TO COORDINATE GEOMETRIC CONTROL INFORMATION AND CONNECTION SPACING. THIS DWG IS SUBMITTED FOR INFORMATION ONLY & IS NOT INTENDED FOR SHOP FABRICATION. DETAIL DWGS WILL SHOW ALL WELDING AND DIMENSIONS REQ'D FOR FABRICATION.

NOTES:

1. FCM INDICATES FRACTURE CRITICAL MATERIAL, CVN INDICATES CHARPY V-NOTCH TESTED MATERIAL. ALL STEEL (EXCEPT FOR BOLTS) SHALL BE HOT-DIP GALVANIZED AFTER FABRICATION.
2. BOLTS SHALL BE 7/8ø A325-1 GALV. (UN). ALL BOLTS SHALL BE INSTALLED WITH HEADS EXPOSED TO PUBLIC VIEW WITH ONE HARDENNED WASHER AND ONE DTI WASHER. BOLTS AND WASHERS SHALL BE MECHANICALLY GALVANIZED.
3. DUE TO ROLLING MILL TOLERANCE, THE ACTUAL THICKNESS OF FILL PLATES MAY VARY FROM WHAT IS SHOWN ON THIS DWG. THE SHOP WILL BE RESPONSIBLE FOR ADJUSTING FILL THICKNESS AS REQUIRED TO SUIT THE ACTUAL MATERIAL SIZE. FILL PLATES SHALL BE A SINGLE THICKNESS PLATE.

REV.	DATE	REMARKS	DWN	CHK	APVL	SHOP
0						

MATERIAL:	SURFACE PREP. & PAINT:	HOLES:	SHOP BOLTS:
M270-50 (UN)	HOT-DIP GALV.	15/16ø (UN)	7/8ø (UN)

DESCRIPTION: TRUSS LAYOUT @ L11 & L17

CASCO BAY STEEL STRUCTURES, INC.
1 WALLACE AVE. SOUTH PORTLAND, ME 04106
PHONE (207) 780-6722 FAX. (207) 780-6726
TENSOR 3285

STRUCTURE:	DRAWN:	DATE:
TH-10 OVER OTTER CREEK PONY TRUSS BRIDGE	RB	10/1/15
	CHKD: WJL	DATE: 10/15/15

LOCATION:	RUTLAND CITY, VERMONT	JOB NO.	DWG NO.
PROJ NO.	BRF 3000 (19)	598	TD4
CUSTOMER:	KUBRICKY CONSTRUCTION CORP.		REV. △

Fri, Oct 16, 2015 01:05:58 PM /users/jobs/3285/TD4 - Rev0

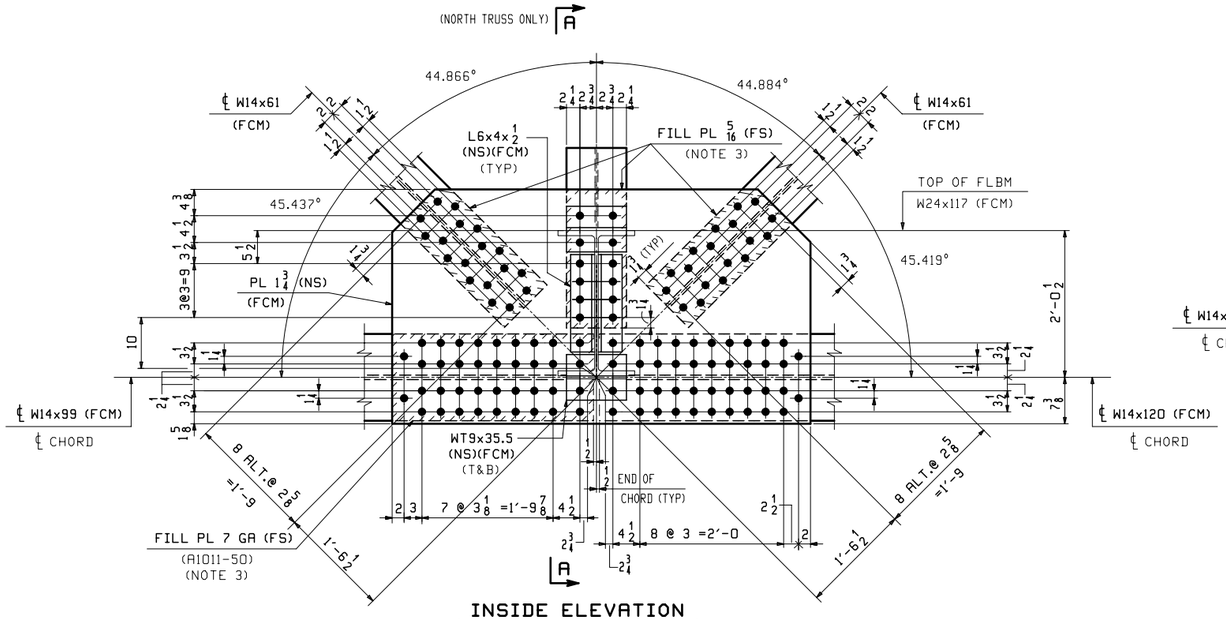

INSIDE ELEVATION

TRUSS T2 SHOWN, T1 OPP. HAND
(LOOKING NORTH)

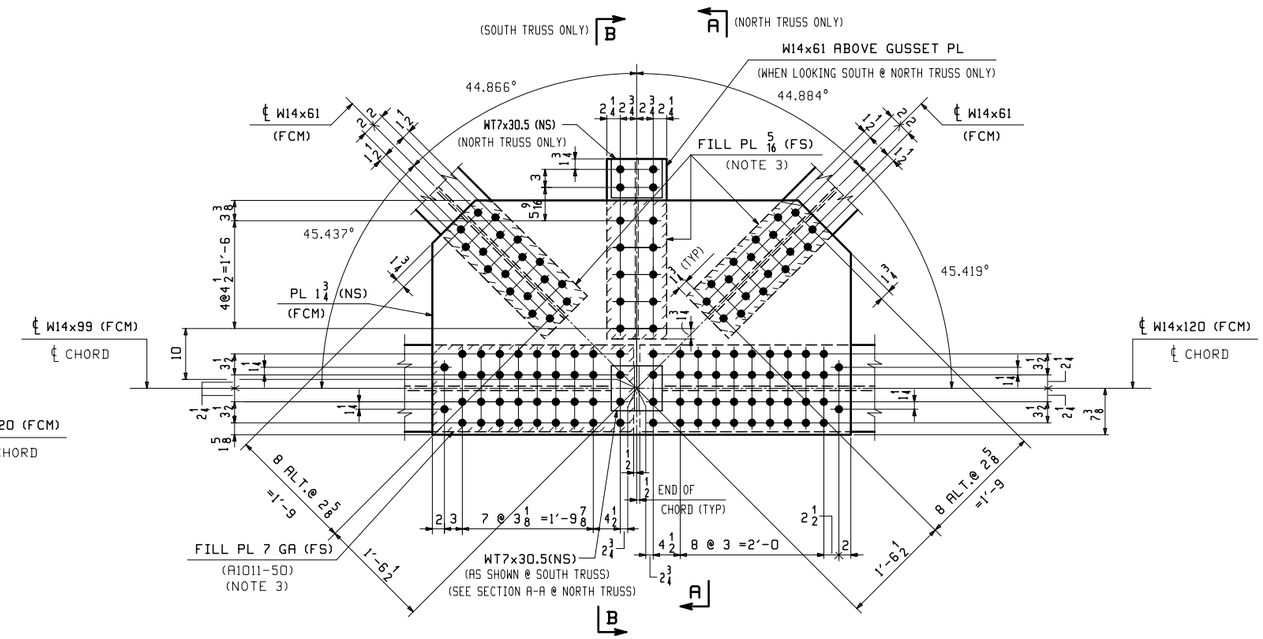

OUTER ELEVATION

TRUSS T1 SHOWN, T2 OPP. HAND & NOTED
(LOOKING NORTH - UN)

LOWER CHORD PANEL POINTS L13 & L15

(DETAILS FOR L13 ARE SHOWN)
(DETAILS FOR L15 ARE OPP. HAND)

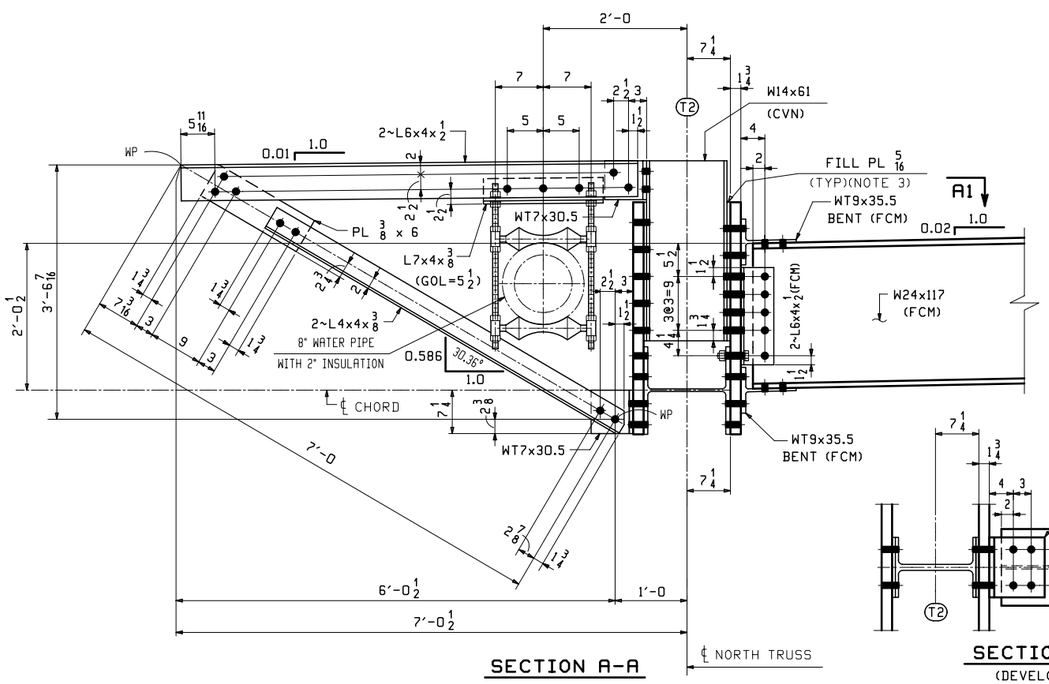

SECTION A-A

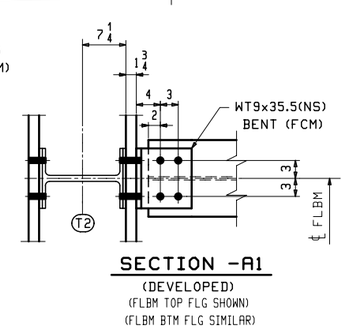

SECTION -A1

(DEVELOPED)
(FLBM TOP FLG SHOWN)
(FLBM BTM FLG SIMILAR)

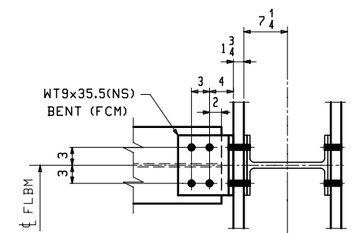

SECTION -B1

(DEVELOPED)
(FLBM TOP FLG SHOWN)
(FLBM BTM FLG SIMILAR)

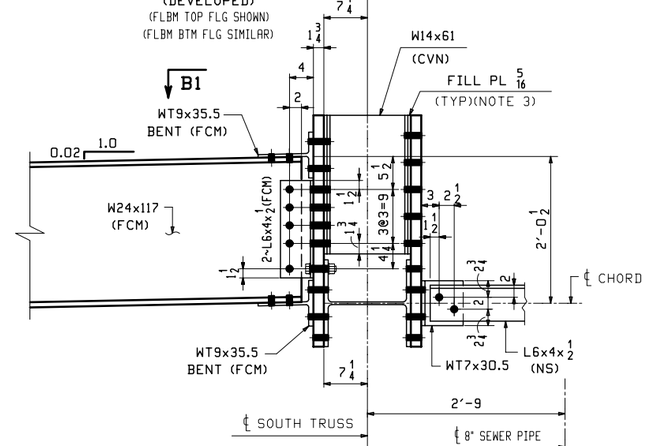

SECTION B-B

** NOTE **
THE PURPOSE OF THIS DRAWING IS TO COORDINATE GEOMETRIC CONTROL INFORMATION AND CONNECTION SPACING. THIS DWG IS SUBMITTED FOR INFORMATION ONLY & IS NOT INTENDED FOR SHOP FABRICATION. DETAIL DWGS WILL SHOW ALL WELDING AND DIMENSIONS REQ'D FOR FABRICATION.

NOTES:

1. FCM INDICATES FRACTURE CRITICAL MATERIAL, CVN INDICATES CHARPY V-NOTCH TESTED MATERIAL. ALL STEEL (EXCEPT FOR BOLTS) SHALL BE HOT-DIP GALVANIZED AFTER FABRICATION.
2. BOLTS SHALL BE 7/8ø A325-1 GALV. (UN). ALL BOLTS SHALL BE INSTALLED WITH HEADS EXPOSED TO PUBLIC VIEW WITH ONE HARDENNED WASHER AND ONE DTI WASHER. BOLTS AND WASHERS SHALL BE MECHANICALLY GALVANIZED.
3. DUE TO ROLLING MILL TOLERANCE, THE ACTUAL THICKNESS OF FILL PLATES MAY VARY FROM WHAT IS SHOWN ON THIS DWG. THE SHOP WILL BE RESPONSIBLE FOR ADJUSTING FILL THICKNESS AS REQUIRED TO SUIT THE ACTUAL MATERIAL SIZE. FILL PLATES SHALL BE A SINGLE THICKNESS PLATE.

REV.	DATE	REMARKS	DWN	CHK	APVL	SHOP
0						

MATERIAL:	SURFACE PREP. & PAINT:	HOLES:	SHOP BOLTS:
M270-50 (UN)	HOT-DIP GALV.	15/16ø (UN)	7/8ø (UN)

DESCRIPTION: TRUSS LAYOUT @ L13 & L15

CASCO BAY STEEL STRUCTURES, INC.
1 WALLACE AVE. SOUTH PORTLAND, ME 04106
PHONE (207) 780-6722 FAX. (207) 780-6726
TENSOR 3285

STRUCTURE: TH-10 OVER OTTER CREEK PONY TRUSS BRIDGE		DRAWN: RB	DATE: 10/2/15
		CHKD: WJL	DATE: 10/15/15
LOCATION: RUTLAND CITY, VERMONT		JOB NO.	DWG NO.
PROJ NO. BRF 3000 (19)		598	TD5
CUSTOMER: KUBRICKY CONSTRUCTION CORP.			REV. △

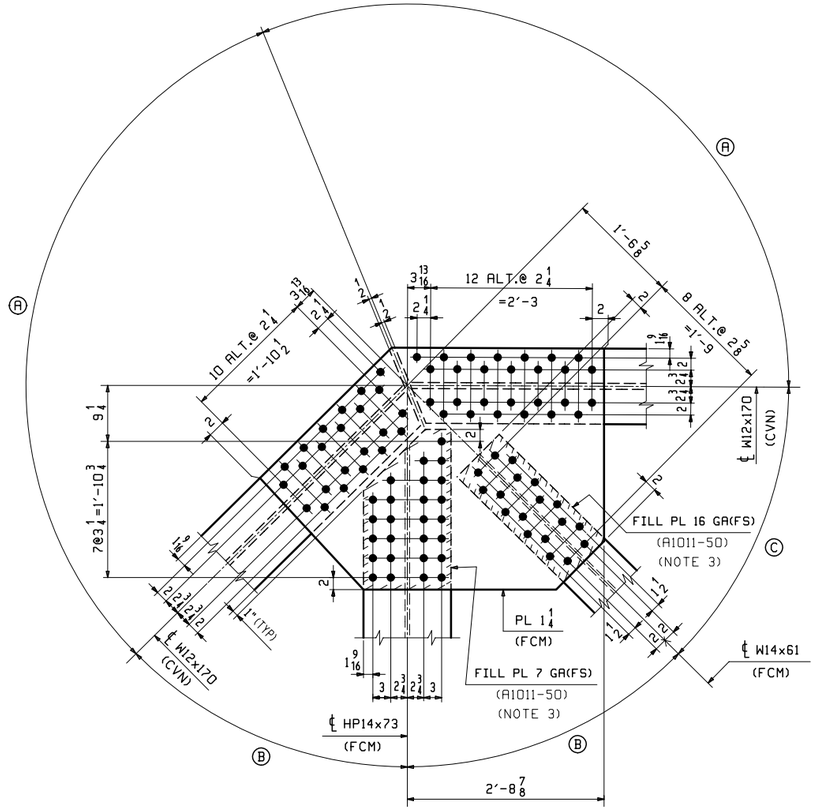

UPPER CORNER PANEL POINTS

ELEVATION AS SHOWN FOR U1 & U10, OPP. HAND FOR U7 & U18
INSIDE & OUTER ELEVATION FOR TRUSS T1 & T2 ARE IDENTICAL
(LOOKING NORTH @ U1 & U10, LOOKING SOUTH @ U7 & U18)

PANEL POINT	Ⓐ	Ⓑ	Ⓒ
U1	112.466°	45.312°	44.444°
U7	112.466°	45.312°	44.444°
U10	112.808°	44.638°	45.108°
U18	112.808°	44.638°	45.108°

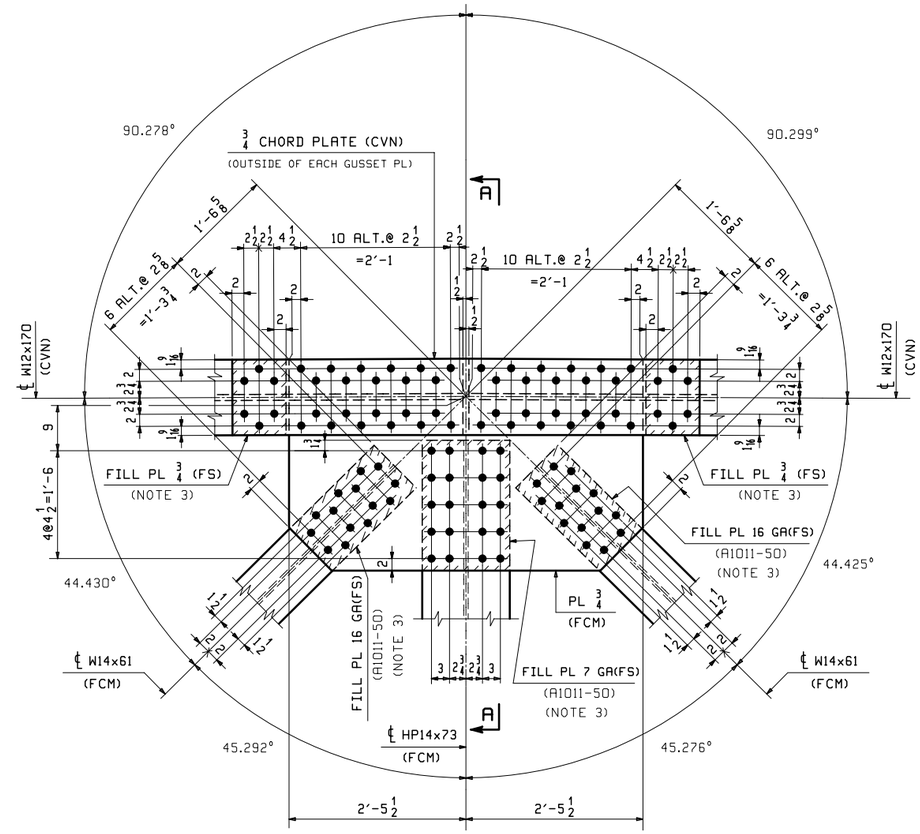

UPPER CHORD PANEL POINTS U3 & U5

(DETAILS FOR U3 ARE SHOWN)
(DETAILS FOR U5 ARE OPP. HAND)
INSIDE & OUTER ELEVATION FOR TRUSS T1 & T2 ARE IDENTICAL
(LOOKING NORTH)

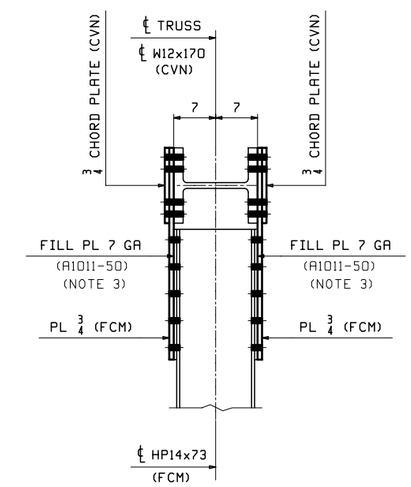

SECTION A-A

NOTES:

1. FCM INDICATES FRACTURE CRITICAL MATERIAL,
   CVN INDICATES CHARPY V-NOTCH TESTED MATERIAL.
   ALL STEEL (EXCEPT FOR BOLTS) SHALL BE HOT-DIP GALVANIZED AFTER FABRICATION.

2. BOLTS SHALL BE 7/8Ø A325-1 GALV. (UN). ALL BOLTS SHALL BE INSTALLED WITH HEADS EXPOSED TO PUBLIC VIEW WITH ONE HARDENNED WASHER AND ONE DTI WASHER. BOLTS AND WASHERS SHALL BE MECHANICALLY GALVANIZED.

3. DUE TO ROLLING MILL TOLERANCE, THE ACTUAL THICKNESS OF FILL PLATES MAY VARY FROM WHAT IS SHOWN ON THIS DWG. THE SHOP WILL BE RESPONSIBLE FOR ADJUSTING FILL THICKNESS AS REQUIRED TO SUIT THE ACTUAL MATERIAL SIZE. FILL PLATES SHALL BE A SINGLE THICKNESS PLATE.

** NOTE **
THE PURPOSE OF THIS DRAWING IS TO COORDINATE GEOMETRIC CONTROL INFORMATION AND CONNECTION SPACING. THIS DWG IS SUBMITTED FOR INFORMATION ONLY & IS NOT INTENDED FOR SHOP FABRICATION. DETAIL DWGS WILL SHOW ALL WELDING AND DIMENSIONS REQ'D FOR FABRICATION.

REV.	DATE	REMARKS	DWN	CHK	APVL	SHOP
0						

MATERIAL:	SURFACE PREP. & PAINT:	HOLES:	SHOP BOLTS:
M270-50 (UN)	HOT-DIP GALV.	15/16Ø (UN)	7/8Ø (UN)

DESCRIPTION: TRUSS LAYOUT @ U1, U3, U5, U7, U10 & U18

CASCO BAY STEEL STRUCTURES, INC.
1 WALLACE AVE. SOUTH PORTLAND, ME 04106
PHONE (207) 780-6722 FAX. (207) 780-6726
TENSOR 3285

STRUCTURE:	TH-10 OVER OTTER CREEK PONY TRUSS BRIDGE	DRAWN: RB	DATE: 10/2/15
		CHKD: WJL	DATE: 10/15/15
LOCATION:	RUTLAND CITY, VERMONT	JOB NO.	DWG NO.
PROJ NO.	BRF 3000 (19)	598	TD6
CUSTOMER:	KUBRICKY CONSTRUCTION CORP.		REV. △

RB Fri, Oct 16, 2015 01:10:53 PM /users/jobs/3285/TD6.Rev0

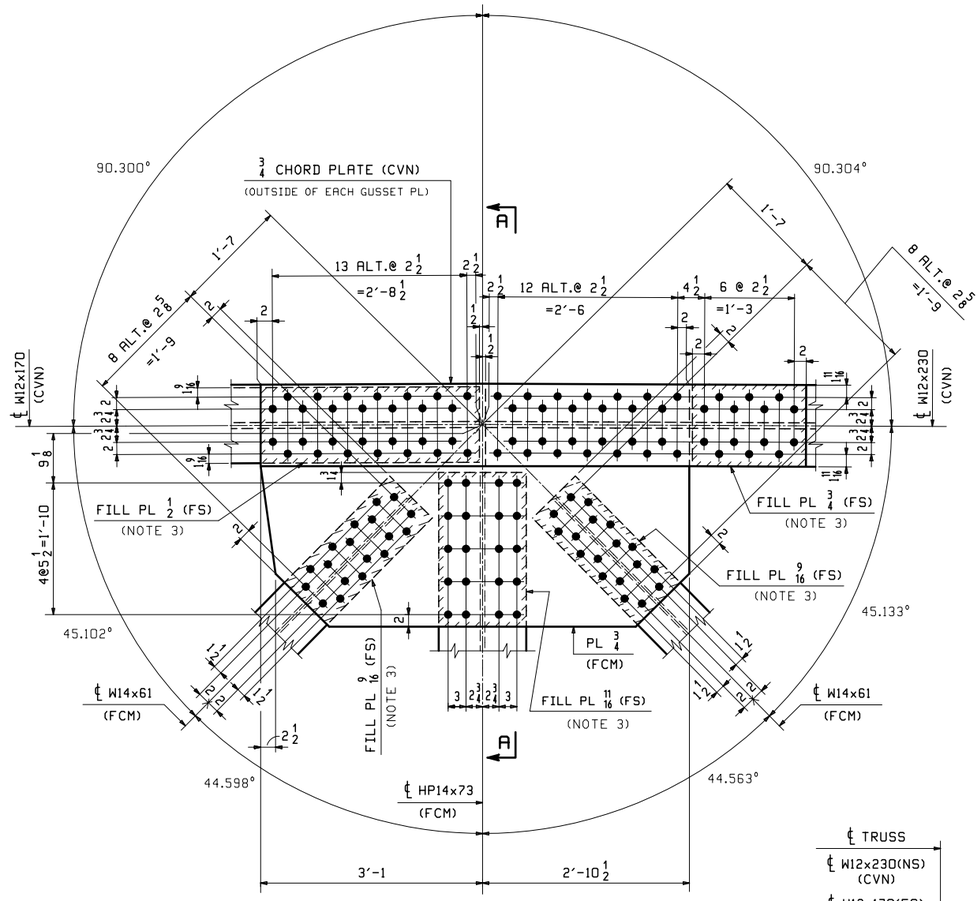

UPPER CHORD PANEL POINTS U12 & U16

(DETAILS FOR U12 ARE SHOWN)
(DETAILS FOR U16 ARE OPP. HAND)
INSIDE & OUTER ELEVATION FOR TRUSS T1 & T2 ARE IDENTICAL
(LOOKING NORTH)

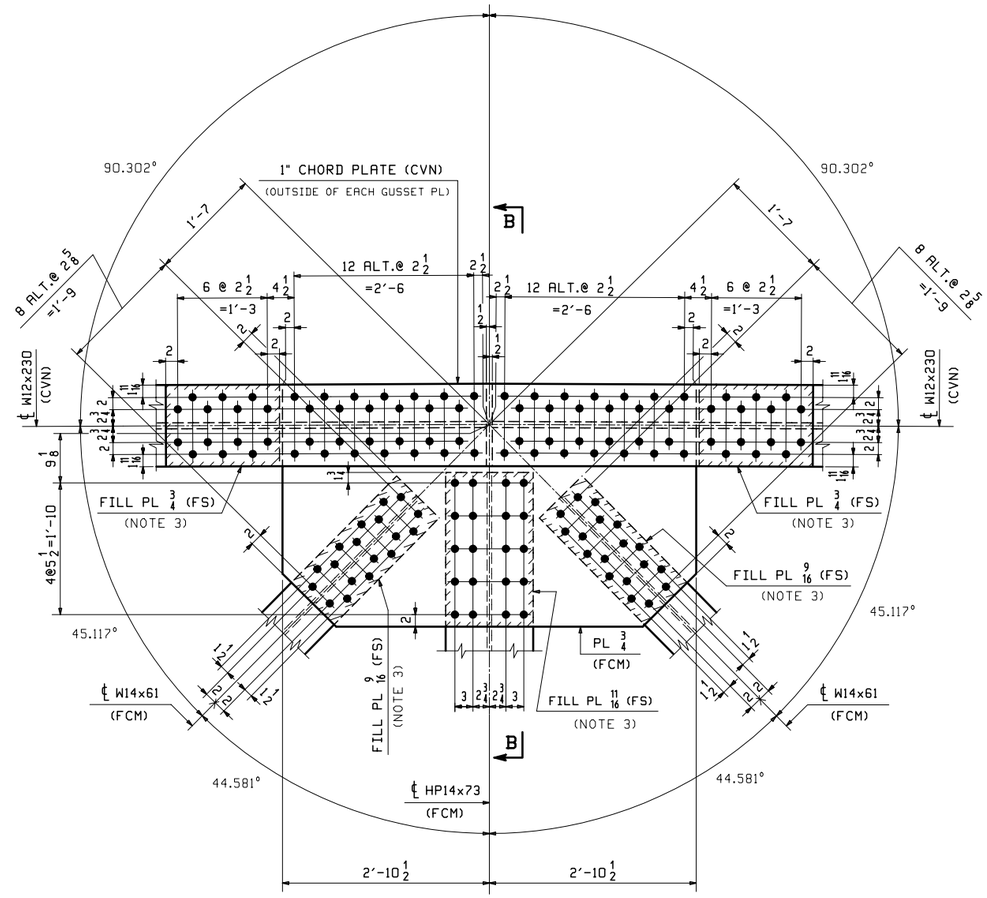

UPPER CHORD PANEL POINT U14

INSIDE & OUTER ELEVATION FOR TRUSS T1 & T2 ARE IDENTICAL
(LOOKING NORTH)

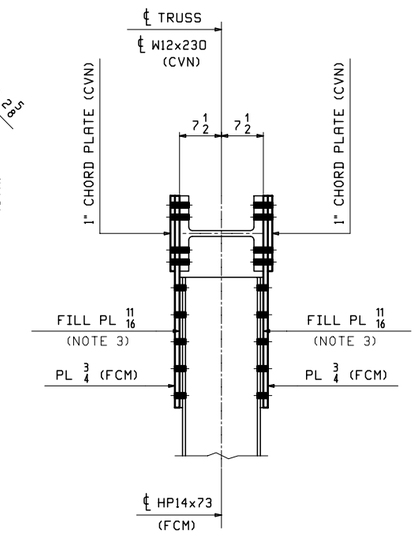

SECTION B-B

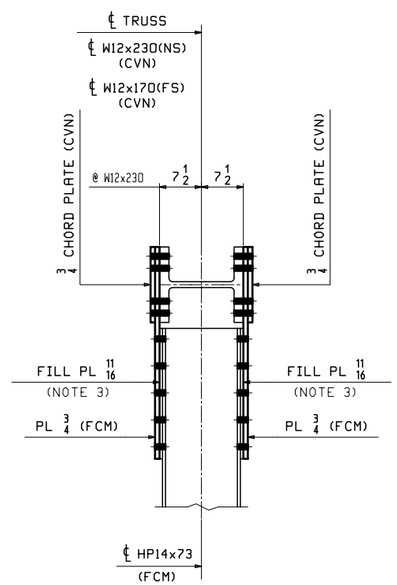

SECTION A-A

NOTES:

1. FCM INDICATES FRACTURE CRITICAL MATERIAL,
   CVN INDICATES CHARPY V-NOTCH TESTED MATERIAL.
   ALL STEEL (EXCEPT FOR BOLTS) SHALL BE HOT-DIP GALVANIZED AFTER FABRICATION.
2. BOLTS SHALL BE 7/8Ø A325-1 GALV. (UN). ALL BOLTS SHALL BE INSTALLED WITH HEADS EXPOSED TO PUBLIC VIEW WITH ONE HARDENNED WASHER AND ONE DTI WASHER. BOLTS AND WASHERS SHALL BE MECHANICALLY GALVANIZED.
3. DUE TO ROLLING MILL TOLERANCE, THE ACTUAL THICKNESS OF FILL PLATES MAY VARY FROM WHAT IS SHOWN ON THIS DWG. THE SHOP WILL BE RESPONSIBLE FOR ADJUSTING FILL THICKNESS AS REQUIRED TO SUIT THE ACTUAL MATERIAL SIZE. FILL PLATES SHALL BE A SINGLE THICKNESS PLATE.

** NOTE **
THE PURPOSE OF THIS DRAWING IS TO COORDINATE GEOMETRIC CONTROL INFORMATION AND CONNECTION SPACING. THIS DWG IS SUBMITTED FOR INFORMATION ONLY & IS NOT INTENDED FOR SHOP FABRICATION. DETAIL DWGS WILL SHOW ALL WELDING AND DIMENSIONS REQ'D FOR FABRICATION.

REV.	DATE	REMARKS	DWN	CHK	APVL	SHOP
0						

MATERIAL: M270-50 (UN)	SURFACE PREP. & PAINT: HOT-DIP GALV.	HOLES: 15/16Ø (UN)	SHOP BOLTS: 7/8Ø (UN)

DESCRIPTION: TRUSS LAYOUT @ U12, U14 & U16

CASCO BAY STEEL STRUCTURES, INC.
1 WALLACE AVE. PHONE (207) 780-6722
SOUTH PORTLAND, ME 04106 FAX. (207) 780-6726
TENSOR 3285

STRUCTURE: TH-10 OVER OTTER CREEK PONY TRUSS BRIDGE		DRAWN: RB	DATE: 10/5/15
		CHKD: WJL	DATE: 10/15/15
LOCATION:	RUTLAND CITY, VERMONT	JOB NO.	DWG NO.
PROJ NO.	BRF 3000 (19)	598	TD7
CUSTOMER:	KUBRICKY CONSTRUCTION CORP.		REV. △

Fri, Oct 16, 2015 01:01:31 PM /users/jobs/3285/TD7 - Rev0

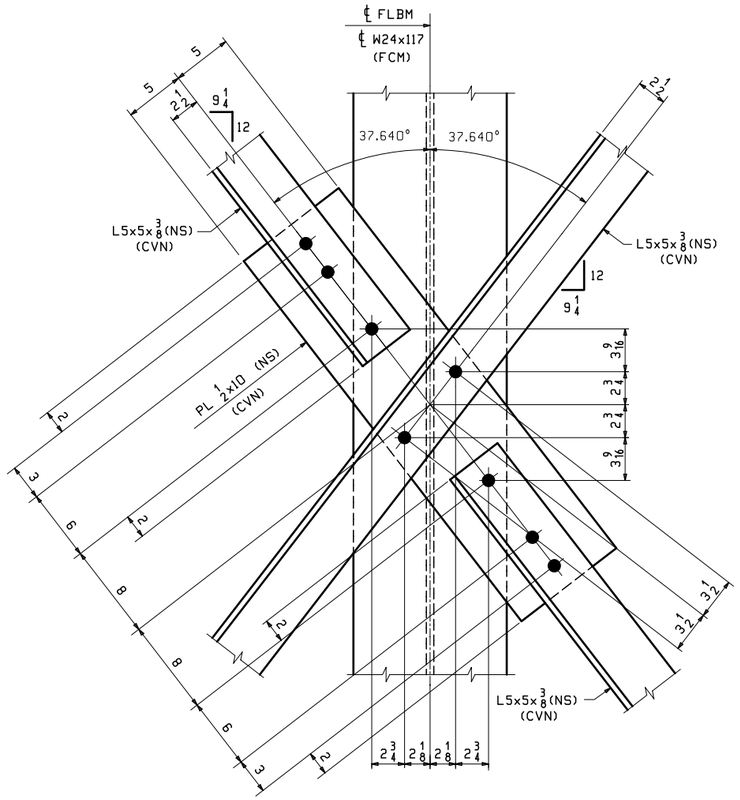

DETAIL AT CENTER OF FLOORBEAMS

(FOR SPAN 1)

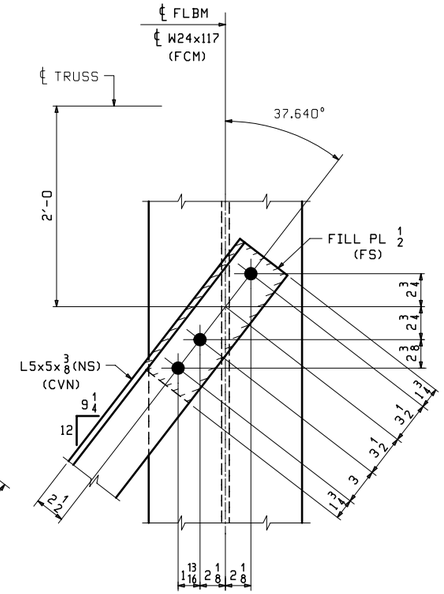

DETAIL AT END OF FLOORBEAMS

(FOR SPAN 1)

LATERAL BRACING @ BTM OF FLOORBEAMS FOR SPAN 1

(LOOKING UP AT FLOORBEAM BOTTOM FLANGE)

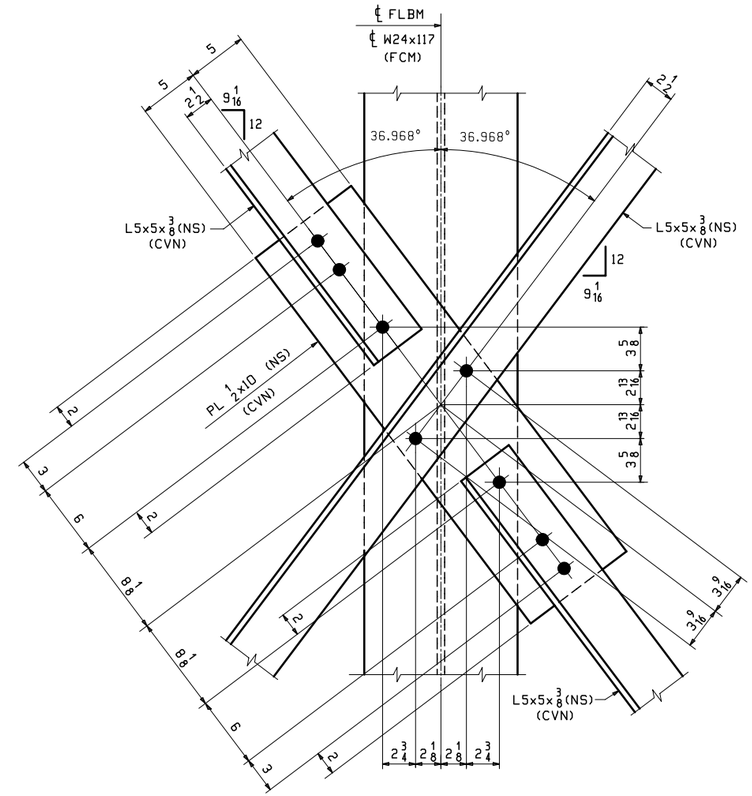

DETAIL AT CENTER OF FLOORBEAMS

(FOR SPAN 2)

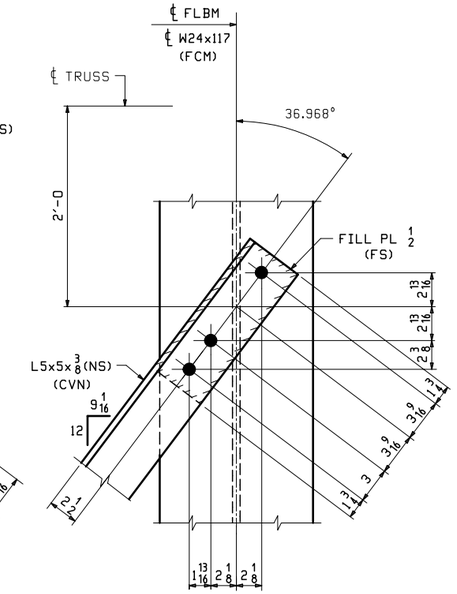

DETAIL AT END OF FLOORBEAMS

(FOR SPAN 2)

LATERAL BRACING @ BTM OF FLOORBEAMS FOR SPAN 2

(LOOKING UP AT FLOORBEAM BOTTOM FLANGE)

** NOTE **
THE PURPOSE OF THIS DRAWING IS TO COORDINATE GEOMETRIC CONTROL INFORMATION AND CONNECTION SPACING. THIS DWG IS SUBMITTED FOR INFORMATION ONLY & IS NOT INTENDED FOR SHOP FABRICATION. DETAIL DWGS WILL SHOW ALL WELDING AND DIMENSIONS REQ'D FOR FABRICATION.

NOTES:

1. FCM INDICATES FRACTURE CRITICAL MATERIAL, CVN INDICATES CHARPY V-NOTCH TESTED MATERIAL. ALL STEEL (EXCEPT FOR BOLTS) SHALL BE HOT-DIP GALVANIZED AFTER FABRICATION.

2. BOLTS SHALL BE 7/8Ø A325-1 GALV. ALL BOLTS SHALL BE INSTALLED WITH HEADS EXPOSED TO PUBLIC VIEW WITH ONE HARDENNED WASHER AND ONE DTI WASHER. BOLTS AND WASHERS SHALL BE MECHANICALLY GALVANIZED.

REV.	DATE	REMARKS	DWN	CHK	APVL	SHOP
0						

MATERIAL:	SURFACE PREP. & PAINT:	HOLES:	SHOP BOLTS:
M270-50 (UN)	HOT-DIP GALV.	15/16Ø	NONE

DESCRIPTION: LAYOUT FOR LATERAL BRACING

CASCO BAY STEEL STRUCTURES, INC.
1 WALLACE AVE.
SOUTH PORTLAND, ME 04106
PHONE (207) 780-6722
FAX. (207) 780-6726
TENSOR 3285

STRUCTURE: TH-10 OVER OTTER CREEK PONY TRUSS BRIDGE	DRAWN: RB	DATE: 10/5/15
	CHKD: WJL	DATE: 10/15/15
LOCATION: RUTLAND CITY, VERMONT	JOB NO.	DWG NO.
PROJ NO. BRF 3000 (19)	598	TD8
CUSTOMER: KUBRICKY CONSTRUCTION CORP.		REV. △

WJL Fri, Oct 16, 2015 01:42:41 PM /users/jobs/3285/TD8 : Rev0

SUPERSTRUCTURE DESIGN CALCULATIONS

VERMONT AGENCY OF TRANSPORTATION

PROJECT No. BRF 3000 (19)

BRIDGE #17 RUTLAND CITY

ROUTE TH 10 (RIPLEY ROAD) OVER OTTER CREEK
Rutland, Vermont

☐ NO EXCEPTION TAKEN ☒ MAKE CORRECTIONS NOTED
☐ REJECTED ☐ REVISE AND RESUBMIT
☐ SUBMIT SPECIFIED ITEM

CHECKING IS ONLY FOR THE GENERAL CONFORMANCE WITH THE DESIGN CONCEPT OF THE PROJECT AND GENERAL COMPLIANCE WITH THE INFORMATION GIVEN IN THE CONTRACT DOCUMENTS. ANY ACTION SHOWN IS SUBJECT TO THE REQUIREMENTS OF THE PLANS AND SPECIFICATIONS. CONTRACTOR IS RESPONSIBLE FOR DIMENSIONS WHICH SHALL BE CONFIRMED AND CORRELATED AT THE JOB SITE; FABRICATION PROCESSES AND TECHNIQUES OF CONSTRUCTION; COORDINATION OF HIS WORK WITH THAT OF ALL OTHER TRADES AND THE SATISFACTORY PERFORMANCE OF THE WORK.

CHA

DATE 11-20-15 BY J. NAJDOWSKI

STATE OF VERMONT
THOMAS A. DENSFORD
NO. 108525
STRUCTURAL
LICENSED
PROFESSIONAL ENGINEER
10-15-15

October 2015
Revision 1

Prepared by: Fay, Spofford & Thorndike, LLC

ENGINEERS FST Since 1914

For: Casco Bay Steel Structures, Inc.

CASCO BAY STEEL STRUCTURES

SUPERSTRUCTURE DESIGN CALCULATIONS FOR BRIDGE #17, RUTLAND, VT

TABLE OF CONTENTS

Project

VERMONT AGENCY OF TRANSPORTATION
PROJECT No. BRF 3000 (19)
BRIDGE #17 RUTLAND CITY
ROUTE TH 10 (RIPLEY ROAD) OVER OTTER CREEK
Rutland, Vermont

Design References

1 Vtrans Bridge Manual
2 Bridge plans by CHA dated 6-26-14
3 AASHTO LRFD Bridge Design Specification, 7th Edition
4 NCHRP 197, Guidelines for the Load and Resistance Factor Design and Rating of Riveted and Bolted Gusset-Plate Connections for Steel Bridges
5 FHWA-HRT-14-063, Guidelines for Design and Rating of Gusset-Plate Connections for Steel Truss Bridges
6 AASHTO Guide Specifications for the Design of Pedestrian Bridges, 2009
7 AISC Steel Handbook, 13th Edition, 2005
8 Guide to Stability Design Criteria for Metal Structures, 2010

A. LOADS AND LOAD COMBINATIONS

B. PONY TRUSS TOP CHORD STABILITY

C. TRUSS MEMBER FORCES FOR DESIGN

D. TRUSS DESIGN

E. TRUSS BRACING

F. GUSSET PLATES DESIGN

G. FLOOR BEAM DESIGN

H. SIDEWALK AND UTILITY SUPPORTS DESIGN

I. DECK DESIGN

J. GEOMETRY AND CAMBER

K. BEARING DESIGN

L. SUPERSTRUCTURE LOAD RATING

A. LOADS AND LOAD COMBINATIONS

SUPERSTRUCTURE DESIGN CALCULATIONS FOR BRIDGE #17, RUTLAND, VT

TRUSS -- MAIN MEMBER DESIGN

- Permanent Loads

CR = force effects due to creep
DD = downdrag force
DC = dead load of structural components and nonstructural attachments
DW = dead load of wearing surfaces and utilities
EH = horizontal earth pressure load
EL = miscellaneous locked-in force effects resulting from the construction process, including jacking apart of cantilevers in segmental construction
ES = earth surcharge load
EV = vertical pressure from dead load of earth fill
PS = secondary forces from post-tensioning
SH = force effects due to shrinkage

- Transient Loads

BL = blast loading
BR = vehicular braking force
CE = vehicular centrifugal force
CT = vehicular collision force
CV = vessel collision force
EQ = earthquake load
FR = friction load
IC = ice load
IM = vehicular dynamic load allowance
LL = vehicular live load
LS = live load surcharge
PL = pedestrian live load
SE = force effect due to settlement
TG = force effect due to temperature gradient
TU = force effect due to uniform temperature
WA = water load and stream pressure
WL = wind on live load
WS = wind load on structure

Table 3.6.1.1.2-1—Multiple Presence Factors, *m*

Number of Loaded Lanes	Multiple Presence Factors, *m*
1	1.20
2	1.00
3	0.85
>3	0.65

If a component supported a sidewalk and two lanes of vehicular live load, it would be investigated for:

- One lane of vehicular live load, $m = 1.20$;
- The greater of the more significant lanes of vehicular live load and the pedestrian loads or two lanes of vehicular live load, $m = 1.0$, applied to the governing case; and
- Two lanes of vehicular live load and the pedestrian loads, $m = 0.85$.

Table 3.4.1-1—Load Combinations and Load Factors

Load Combination Limit State	*DC* *DD* *DW* *EH* *EV* *ES* *EL* *PS* *CR* *SH*	*LL* *IM* *CE* *BR* *PL* *LS*	*WA*	*WS*	*WL*	*FR*	*TU*	*TG*	*SE*	Use One of These at a Time *EQ*	*BL*	*IC*	*CT*	*CV*
Strength I (unless noted)	γ_p	1.75	1.00	—	—	1.00	0.50/1.20	γ_{TG}	γ_{SE}	—	—	—	—	—
Strength II	γ_p	1.35	1.00	—	—	1.00	0.50/1.20	γ_{TG}	γ_{SE}	—	—	—	—	—
Strength III	γ_p	—	1.00	1.40	—	1.00	0.50/1.20	γ_{TG}	γ_{SE}	—	—	—	—	—
Strength IV	γ_p	—	1.00	—	—	1.00	0.50/1.20	—	—	—	—	—	—	—
Strength V	γ_p	1.35	1.00	0.40	1.0	1.00	0.50/1.20	γ_{TG}	γ_{SE}	—	—	—	—	—
Extreme Event I	γ_p	γEQ	1.00	—	—	1.00	—	—	—	1.00	—	—	—	—
Extreme Event II	γ_p	0.50	1.00	—	—	1.00	—	—	—	—	1.00	1.00	1.00	1.00
Service I	1.00	1.00	1.00	0.30	1.0	1.00	1.00/1.20	γ_{TG}	γ_{SE}	—	—	—	—	—
Service II	1.00	1.30	1.00	—	—	1.00	1.00/1.20	—	—	—	—	—	—	—
Service III	1.00	0.80	1.00	—	—	1.00	1.00/1.20	γ_{TG}	γ_{SE}	—	—	—	—	—
Service IV	1.00	—	1.00	0.70	—	1.00	1.00/1.20	—	1.0	—	—	—	—	—
Fatigue I—*LL, IM & CE* only	—	1.50	—	—	—	—	—	—	—	—	—	—	—	—
Fatigue I II—*LL, IM & CE* only	—	0.75	—	—	—	—	—	—	—	—	—	—	—	—

Table 3.4.1-2—Load Factors for Permanent Loads, γ_p

Type of Load, Foundation Type, and Method Used to Calculate Downdrag		Load Factor Maximum	Load Factor Minimum
DC: Component and Attachments		1.25	0.90
DC: Strength IV only		1.50	0.90
DD: Downdrag	Piles, α Tomlinson Method	1.4	0.25
	Piles, λ Method	1.05	0.30
	Drilled shafts, O'Neill and Reese (1999) Method	1.25	0.35
DW: Wearing Surfaces and Utilities		1.50	0.65
EH: Horizontal Earth Pressure			
• Active		1.50	0.90
• At-Rest		1.35	0.90
• *AEP* for anchored walls		1.35	N/A
EL: Locked-in Construction Stresses		1.00	1.00
EV: Vertical Earth Pressure			
• Overall Stability		1.00	N/A
• Retaining Walls and Abutments		1.35	1.00
• Rigid Buried Structure		1.30	0.90
• Rigid Frames		1.35	0.90
• Flexible Buried Structures			
o Metal Box Culverts and Structural Plate Culverts with Deep Corrugations		1.5	0.9
o Thermoplastic culverts		1.3	0.9
o All others		1.95	0.9
ES: Earth Surcharge		1.50	0.75

The multiple presence factor of 1.20 for a single lane does not apply to the pedestrian loads. Therefore, the case of the pedestrian loads without the vehicular live load is a subset of the second bulleted item.

The multiple presence factors in Table 3.6.1.1.2-1 were developed on the basis of an ADTT of 5,000 trucks in one direction. The force effect resulting from the appropriate number of lanes may be reduced for sites with lower ADTT as follows:

- If $100 \leq ADTT \leq 1{,}000$, 95 percent of the specified force effect may be used; and
- If $ADTT < 100$, 90 percent of the specified force effect may be used.

This adjustment is based on the reduced probability of attaining the design event during a 75-year design life with reduced truck volume.

TRAFFIC DATA

2012	ADT	=	2100
2032	ADT	=	2200
2032	ADTT	=	190
2032	DHV	=	270
	T	=	1.2%
	D	=	61%
	V	=	30 MPH

2013 ~ 2032 CUM. ESALS = 716,000

2013 ~ 2053 CUM. ESALS = 1,670,000

1.3.4—Redundancy

Multiple-load-path and continuous structures should be used unless there are compelling reasons not to use them.

For the strength limit state:

$\eta_R \geq$ 1.05 for nonredundant members

$=$ 1.00 for conventional levels of redundancy, foundation elements where ϕ already accounts for redundancy as specified in Article 10.5

$\geq$ 0.95 for exceptional levels of redundancy beyond girder continuity and a torsionally-closed cross-section

ADTT is between 100 and 1000,
therefore may use 95% of multipresence factor

eta R = 1.05 for non-redundant members (truss)

redundancy factor of 1.05 and 95% factor for traffic cancels to be 1.0
so use multipresence factors per Table 3.6.1.1.2-1

Ref.	Load	Comment	STR I	STR III	STR IIIup	STR V	SVC I	SVC II	SVC IVup	FAT I
3.5.1	DC	see attached	1.25	1.25	1.25	1.25	1.00	1.00	1.00	-
3.5.1	DW	see attached	1.50	1.50	1.50	1.50	1.00	1.00	1.00	-
3.6.1.1	LL	HL-93	1.75	-	-	1.35	1.00	1.30	-	-
	LL fatigue	one HS-20 truck only	-	-	-	-	-	-	-	1.50
	IM	33%	1.75	-	-	-	-	-	-	-
	IM fatigue	15%	-	-	-	-	-	-	-	1.50
	PL	75 psf	1.75	-	-	1.35	1.00	1.30	-	-
3.8	WL	100 plf at 6' ht	-	-	-	1.00	1.00	-	-	-
3.8.1.2	WS	50+25 psf windw/leeward	-	1.40	1.40	0.40	0.30	-	0.7	-
	WS uplift	20 psf along qutr pt of deck	-	-	1.40	-	-	-	0.7	-
	BR	for anchor rod design, 18k per lane								
	EQ	for anchor rod design 3.10.9								
	LL sidewalk	10k snow truck	-	-	-	-	-	-		-

BRIDGE #17 RUTLAND CITY
ROUTE TH 10 (RIPLEY ROAD) OVER OTTER CREEK
Rutland, Vermont

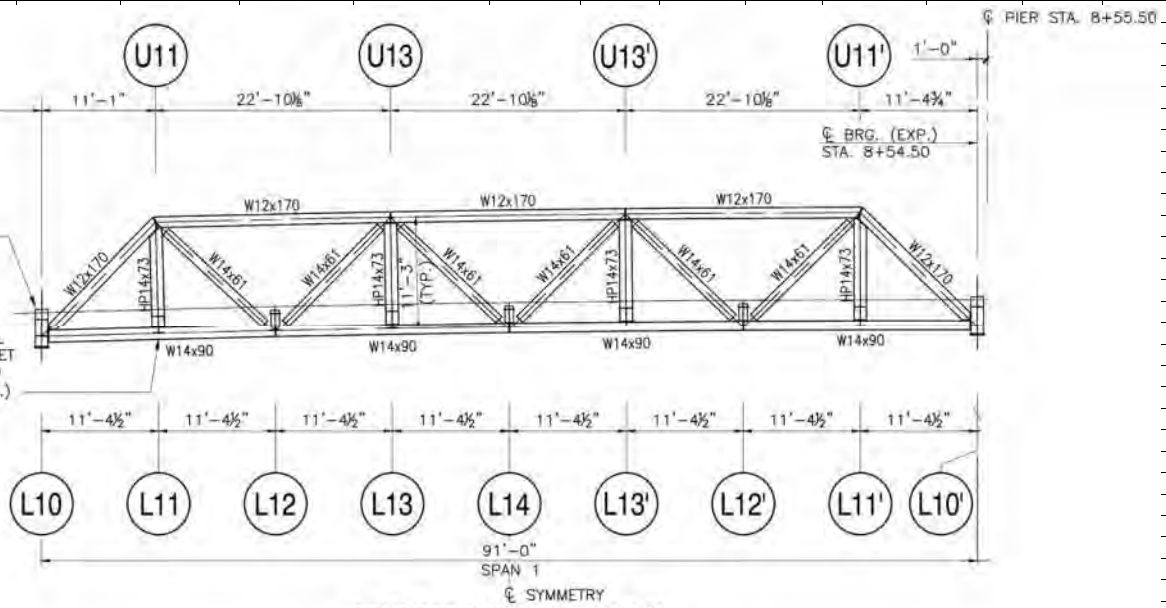

TRUSS FRAMING ELEVATION

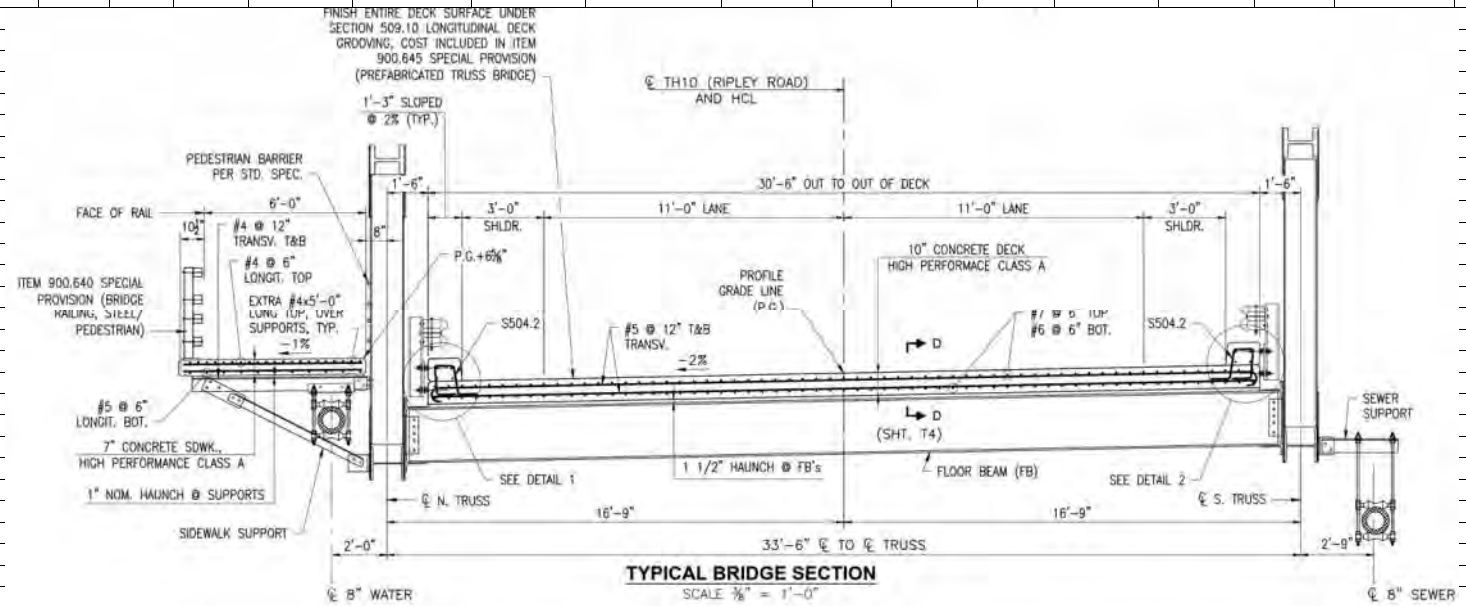

TYPICAL BRIDGE SECTION

SCALE ⅜" = 1'-0"

DEAD LOADS																			
TRUSS SPAN 1																			
LENGTH	91.00	ft																	
TRUSS CL TO CL	33.50	ft																	
CONNECTION WEIGHTS, TWO TRUSSES SPAN 1																	WT/FT	WT/FT	WT/FT
		GUSSET	GUSSET	GUSSET	GUSSET	GUSSET	CHD PL	CHD PL	CHD PL	CHD PL	CHD PL			TOTAL		ECCENTRICITY	TOTAL	LT TRUSS	RT TRUSS
JOINT		THICK	LENGTH	HEIGHT	NUMBER	WEIGHT	THICK	LENGTH	HEIGHT	NUMBER	WEIGHT	BLOCKING	MISC CONN.	WEIGHT	TYPE				
L10		1.00	43.00	48.00	8	4682	0.00	0.00	0.00	0	0	0.00	948	5631	DC1				
L11, L13		0.75	14.00	36.00	16	1715	0.00	0.00	0.00	0	0	0.00	1443	3158	DC1				
L12		1.25	59.00	36.00	8	6023	0.00	0.00	0.00	0	0	732.00	1257	8012	DC1				
L14		1.25	59.00	36.00	4	3011	0.00	0.00	0.00	0	0	366.00	654	4031	DC1				
U11		1.25	48.00	42.00	8	5717	0.00	0.00	0.00	0	0	0.00	400	6117	DC1				
U13		0.75	58.00	35.00	8	3454	0.75	76.00	12.00	8	1552	0.00	400	5405	DC1				
CONNECTION WEIGHTS, TWO TRUSSES SPAN 1					52	24602				8	1552	1098.00	5102	32354	DC1	0.00	356	178	178
														32354			11	psf	
SIDEWALK SUPPORT LEFT SIDE, SPAN 1								WT/FT	WT/FT	WT/FT									
		LENGTH	WT. EA.	NUMBER	WEIGHT	TYPE	ECCENTRICITY	TOTAL	LT TRUSS	RT TRUSS									
L6x4x1/2		78.00	110.59	18.00	1991	DC1													
L4x4x3/8		72.00	102.08	18.00	1838	DC1													
PL3/8X6X18		18.00	11.48	9.00	103	DC1													
WT7X30.5		15.00	38.13	9.00	343	DC1													
SIDEWALK SUPPORT LEFT SIDE, SPAN 1					4275	DC1	-20.92	47	53	-6									

UTILITY SUPPORT RIGHT SIDE, SPAN 1								WT/FT	WT/FT	WT/FT									
		LENGTH	WT. EA.	NUMBER	WEIGHT	TYPE	ECCENTRICITY	TOTAL	LT TRUSS	RT TRUSS									
L6x4x1/2		36.00	51.04	18.00	919	DC1													
WT7X30.5		9.00	22.88	9.00	206	DC1													
UTILITY SUPPORT RIGHT SIDE, SPAN 1					1125	DC1	19.50	12	-1	13									
TWO TRUSSES, SPAN 1								WT/FT	WT/FT	WT/FT	AREA	I	AREA	I					
MEMBER	SIZE	WT/FT	LENGTH	NO.	WT	TYPE	ECCENTRICITY	TOTAL	LT TRUSS	RT TRUSS	IN2	IN4	FT2	FT4					
BRG POST	W14x90	90.00	4.50	4.00	1620	DC1					26.50	362.00	0.1840	0.01746					
BOTTOM CHORD	W14x90	90.00	90.00	2.00	16200	DC1					26.50	362.00	0.1840	0.01746					
END DIAG	W12x170	170.00	15.11	4.00	10274	DC1					50.00	517.00	0.3472	0.02493					
VERTICALS	HP14x73	73.00	10.25	8.00	5986	DC1					21.40	261.00	0.1486	0.01259					
INT. DIAGONALS	W14x61	61.00	14.22	12.00	10411	DC1					17.90	107.00	0.1243	0.00516					
TOP CHORD	W12X170	170.00	22.85	6.00	23307	DC1					50.00	517.00	0.3472	0.02493					
DIAG. BRACING	L5X5X3/8	12.30	37.65	4.00	1852	DC1													
FLOOR BEAMS	W24x117	117.00	32.17	9.00	33875	DC1													
TWO TRUSSES, SPAN 1					103525	DC1	0.00	1138	569	569									
								34	psf										
SIDEWALK LEFT SIDE, SPAN 1									WT/FT	WT/FT	WT/FT								
	DIM1	DIM2	DIM 3	NO.	UNIT WT	WT	TYPE	ECCENTRICITY	TOTAL	LT TRUSS	RT TRUSS								
SIDEWALK	7.0	0.58	1.00	1.0	150.0	609	DC3	-20.92											
SW HAUNCH	7.0	0.75	0.08	0.1	150.0	6	DC3	-20.92											
PED. RAIL	1.0	1.00	1.00	1.0	100.0	100	DC3	-23.92											
CABLE RAIL	1.0	0.50	8.00	1.0	3.4	14	DC3	-17.42											
SIDEWALK LEFT SIDE, SPAN 1						728	DC3	-21.27	728	827	-98								
UTILITY LEFT SIDE						60	DW	-18.75	60	64	-4								
UTILITY RIGHT SIDE						60	DW	19.50	60	-5	65								
DECK, SPAN 1									WT/FT	WT/FT	WT/FT								
	DIM1	DIM2	DIM 3	NO.	UNIT WT	WT	TYPE	ECCENTRICITY	TOTAL	LT TRUSS	RT TRUSS								
DECK	30.5	0.8	1.0	1.0	150.0	3813	DC2	0.00											
FB HAUNCH	30.5	1.2	0.1	0.1	150.0	59	DC2	0.00											
DECK AND HAUNCH						3871	DC2	0.00	3871	1936	1936								
CURB	1.3	0.8	1.0	2.0	100.0	208	DC3	0.00											
RAIL	1.0	1.0	1.0	2.0	50.0	100	DC3	0.00											
CURB AND RAIL						308	DC3		308	154	154								
WEARING COURSE	28.00	0.25	1.0	1.0	150.0	1050	DW	0.00	1050	525	525								

SUMMARY					LOAD	WT/FT	WT/FT												
					TYPE	LT TRUSS	RT TRUSS												
CONNECTION WEIGHTS, TWO TRUSSES SPAN 1					DC1	178	178												
SIDEWALK SUPPORT LEFT SIDE, SPAN 1					DC1	53	-6												
UTILITY SUPPORT RIGHT SIDE, SPAN 1					DC1	-1	13												
TWO TRUSSES, SPAN 1					DC1	569	569												
					DC1	798	754												
					USE	850	850												
DECK AND HAUNCH					DC2	1936	1936												
					USE	1950	1950												
SIDEWALK LEFT SIDE, SPAN 1					DC3	827	-98												
CURB AND RAIL					DC3	154	154												
					DC3	981	56												
					USE	1000	200												
UTILITY LEFT SIDE					DW	64	-4												
UTILITY RIGHT SIDE					DW	-5	65												
WEARING COURSE					DW	525	525												
					DW	584	586												
					USE	600	600												
					TOTAL DC	3800	3000				LOAD TYPES:								
					TOTAL DW	600	600				DC1	STEEL WEIGHT							
					TOTAL WT/FT, LB	4400	3600				DC2	CONCRETE DECK							
					MIDSPAN DEAD LOAD MOMENT, FT LB	4554550	3726450				DC3	SUPERIMPOSED DEAD							
					MIDSPAN CHORD FORCE, LB	405	331				DW	WEARING SURFACE AND UTILITIES							

BRIDGE #17 RUTLAND CITY

ROUTE TH 10 (RIPLEY ROAD) OVER OTTER CREEK

Rutland, Vermont

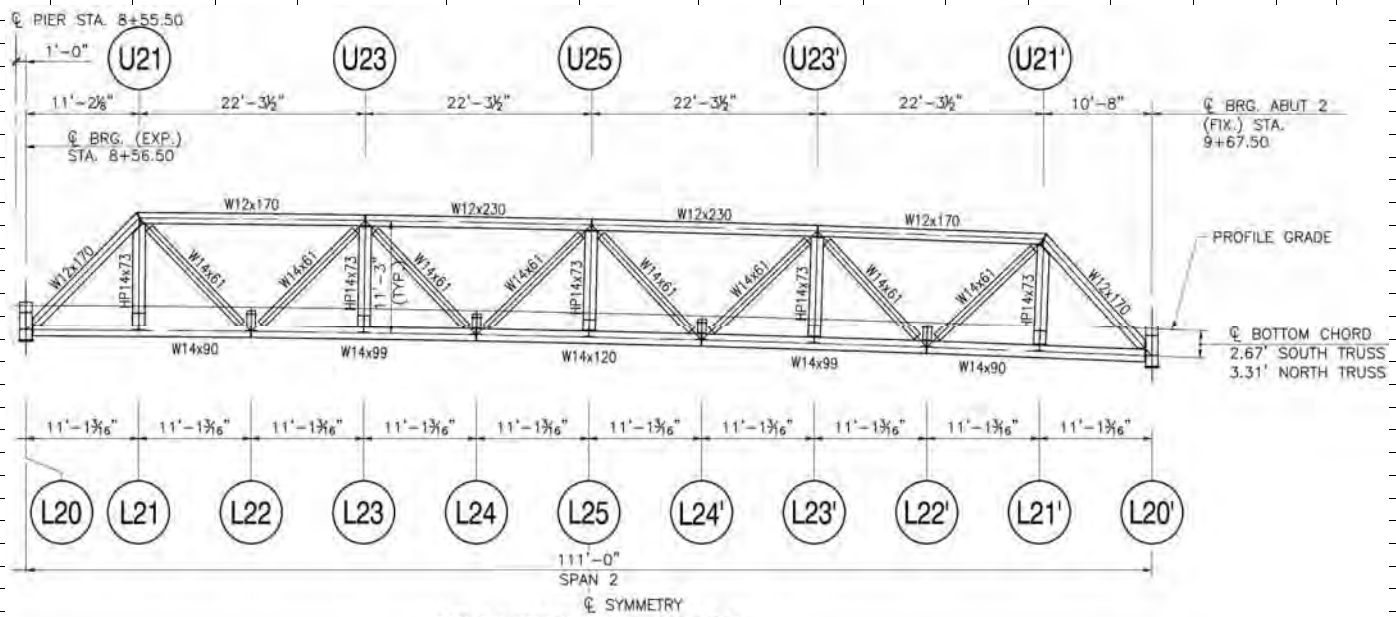

TRUSS FRAMING ELEVATION

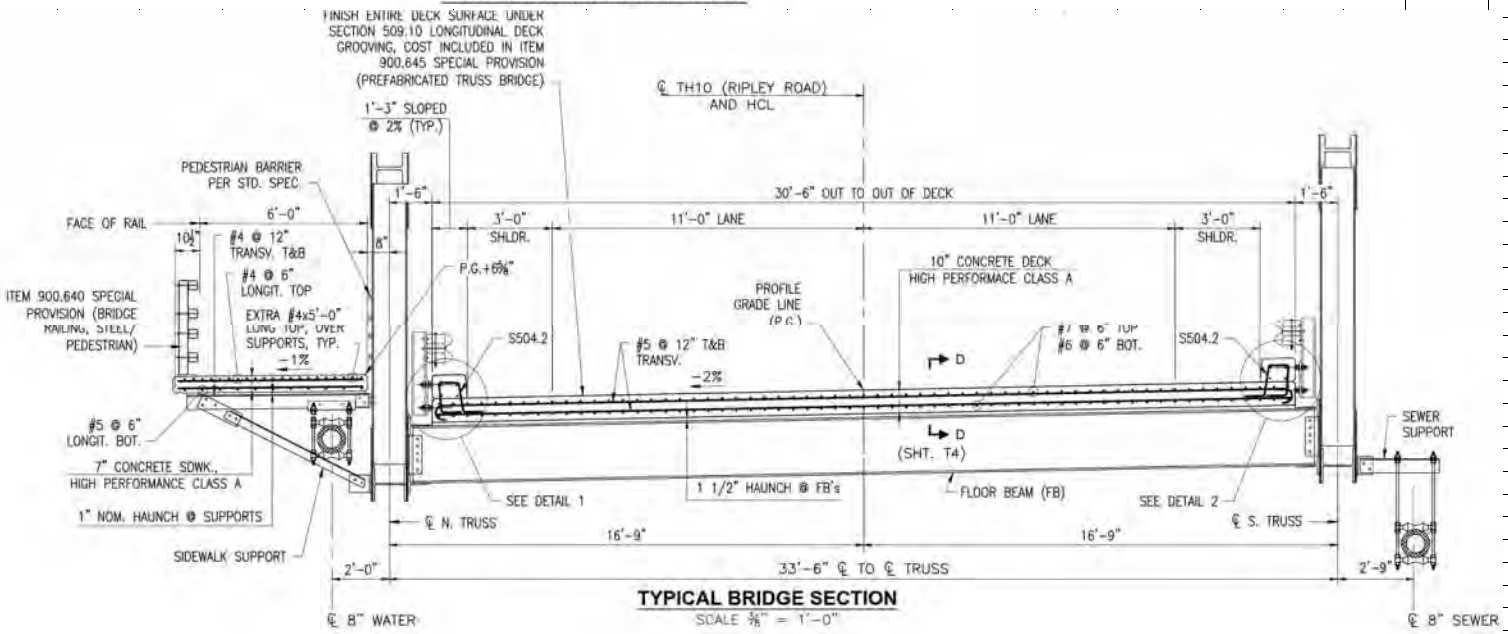

TYPICAL BRIDGE SECTION

SCALE ⅛" = 1'-0"

DEAD LOADS

TRUSS SPAN 2

LENGTH	111.00	ft
TRUSS CL TO CL	33.50	ft

CONNECTION WEIGHTS, TWO TRUSSES SPAN 2

JOINT	GUSSET THICK	GUSSET LENGTH	GUSSET HEIGHT	GUSSET NUMBER	GUSSET WEIGHT	CHD PL THICK	CHD PL LENGTH	CHD PL HEIGHT	CHD PL NUMBER	CHD PL WEIGHT	BLOCKING	SC CONN.	TOTAL WEIGHT	TYPE	ECCEN	WT/FT TOTAL	WT/FT LT TRUSS	WT/FT RT TRUSS
L20	1.00	43.00	48.00	8	4682	0.00	0.00	0.00	0	0	0.00	948	5631	DC1				
L21, L23, L25	0.75	14.00	36.00	20	2144	0.00	0.00	0.00	0	0	0.00	1775	3918	DC1				
L22	1.50	69.00	40.00	8	9392	0.00	0.00	0.00	0	0	732.00	1257	11381	DC1				
L24	1.75	69.00	40.00	8	10957	0.00	0.00	0.00	0	0	732.00	1257	12946	DC1				
U21	1.25	48.00	42.00	8	5717	0.00	0.00	0.00	0	0	0.00	400	6117	DC1				
U23	0.75	69.00	39.00	8	4578	0.75	90.00	12.00	8	1838	0.00	400	6816	DC1				
U25	0.75	67.00	39.00	4	2223	1.00	106.00	12.00	4	1443	0.00	200	3866	DC1				
CONNECTION WEIGHTS, TWO TRUSSES SPAN 2				64	39693				12	3280	1464.00	6237	50674	DC1	0.00	557	278	278
													50674			17	psf	

SIDEWALK SUPPORT LEFT SIDE, SPAN 2

	LENGTH	WT. EA.	NUMBER	WEIGHT	TYPE	ECCENTRICITY	WT/FT TOTAL	WT/FT LT TRUSS	WT/FT RT TRUSS
L6x4x1/2	78.00	110.59	22.00	2433	DC1				
L4x4x3/8	72.00	102.08	22.00	2246	DC1				
PL3/8X6X18	18.00	11.48	11.00	126	DC1				
WT7X30.5	15.00	38.13	11.00	419	DC1				
SIDEWALK SUPPORT LEFT SIDE, SPAN 2				5225	DC1	-20.92	47	53	-6

UTILITY SUPPORT RIGHT SIDE, SPAN 2

	LENGTH	WT. EA.	NUMBER	WEIGHT	TYPE	ECCENTRICITY	WT/FT TOTAL	WT/FT LT TRUSS	WT/FT RT TRUSS
L6x4x1/2	36.00	51.04	22.00	1123	DC1				
WT7X30.5	9.00	22.88	11.00	252	DC1				
UTILITY SUPPORT RIGHT SIDE, SPAN 2				1375	DC1	19.50	12	-1	13

MEMBERS TWO TRUSSES, SPAN 2

MEMBER	SIZE	WT/FT	LENGTH	NO.	WT	TYPE	ECCENTRICITY	WT/FT TOTAL	WT/FT LT TRUSS	WT/FT RT TRUSS	AREA IN2	I IN4	AREA FT2	I FT4
BRG POST	W14x90	90.00	4.50	4.00	1620	DC1					26.50	362.00	0.1840	0.01746
BOTTOM CHORD	W14x90	90.00	21.75	4.00	7830	DC1								
BOTTOM CHORD	W14x99	99.00	22.25	4.00	8811	DC1					29.10	402.00	0.2021	0.01939
BOTTOM CHORD	W14x120	120.00	22.25	2.00	5340	DC1					35.30	495.00	0.2451	0.02387
END DIAG	W12x170	170.00	14.90	4.00	10135	DC1					50.00	517.00	0.3472	0.02493
VERTICALS	HP14x73	73.00	10.25	10.00	7483	DC1					21.40	261.00	0.1486	0.01259
INT. DIAGONALS	W14x61	61.00	14.02	16.00	13683	DC1					17.90	107.00	0.1243	0.00516
TOP CHORD	W12X170	170.00	22.30	4.00	15164	DC1					50.00	517.00	0.3472	0.02493
TOP CHORD	W12X230	230.00	22.30	4.00	20516	DC1					67.70	742.00	0.4701	0.03578
DIAG. BRACING	L5X5X3/8	12.30	37.65	8.00	3705	DC1								
FLOOR BEAMS	W24x117	117.00	32.17	11.00	41403	DC1								
MEMBERS TWO TRUSSES, SPAN 2					135690	DC1	0.00	1491	746	746				
								45	psf					

SIDEWALK LEFT SIDE, SPAN 2									WT/FT	WT/FT	WT/FT
	DIM1	DIM2	DIM 3	NO.	UNIT WT	WT	TYPE	ECCENTRICITY	TOTAL	LT TRUSS	RT TRUSS
SIDEWALK	7.0	0.58	1.0	1.0	150.0	609	DC3	-20.92			
SW HAUNCH	7.0	0.75	0.08	0.1	150.0	6	DC3	-20.92			
PED. RAIL	1.0	1.0	1.0	1.0	100.0	100	DC3	-23.92			
CABLE RAIL	1.0	0.5	8.0	1.0	3.4	14	DC3	-17.42			
SIDEWALK LEFT SIDE, SPAN 2						728	DC3	-21.27	728	827	-98
UTILITY LEFT SIDE						60	DW	-18.75	60	64	-4
UTILITY RIGHT SIDE						60	DW	19.50	60	-5	65
DECK, SPAN 2									WT/FT	WT/FT	WT/FT
	DIM1	DIM2	DIM 3	NO.	UNIT WT	WT	TYPE	ECCENTRICITY	TOTAL	LT TRUSS	RT TRUSS
DECK	30.5	0.83	1.0	1.0	150.0	3813	DC2	0.00			
FB HAUNCH	30.5	1.2	0.13	0.1	150.0	59	DC2	0.00			
DECK AND HAUNCH						3871	DC2	0.00	3871	1936	1936
CURB	1.25	0.83	1.0	2.0	150.0	312	DC3	0.00			
RAIL	1.0	1.0	1.0	2.0	50.0	100	DC3	0.00			
CURB AND RAIL						412	DC3		412	206	206
WEARING COURSE	28.00	0.25	1.0	1.0	150.0	1050	DW	0.00	1050	525	525
SUMMARY					LOAD	WT/FT	WT/FT				
					TYPE	LT TRUSS	RT TRUSS				
CONNECTION WEIGHTS, TWO TRUSSES SPAN 2					DC1	278	278				
SIDEWALK SUPPORT LEFT SIDE, SPAN 2					DC1	53	-6				
UTILITY SUPPORT RIGHT SIDE, SPAN 2					DC1	-1	13				
MEMBERS TWO TRUSSES, SPAN 2					DC1	746	746				
					DC1	1076	1032				
					USE	1100	1100				
DECK AND HAUNCH					DC2	1936	1936				
					USE	1950	1950				
SIDEWALK LEFT SIDE, SPAN 2					DC3	827	-98				
CURB AND RAIL					DC3	206	206				
					DC3	1033	108				
					USE	1050	200				
UTILITY LEFT SIDE					DW	64	-4				
UTILITY RIGHT SIDE					DW	-5	65				
WEARING COURSE					DW	525	525				
					DW	584	586				
					USE	600	600				
					TOTAL DC	4100	3250				
					TOTAL DW	600	600				
					TOTAL WT/FT, LB	4700	3850				
			MIDSPAN DEAD LOAD MOMENT, FT LB			7238588	5929481				
				MIDSPAN CHORD FORCE, LB		643	527				

LOAD TYPES:	
DC1	STEEL WEIGHT
DC2	CONCRETE DECK
DC3	SUPERIMPOSED DEAD
DW	WEARING SURFACE AND UTILITIES

LIVE LOAD and DYNAMIC LOAD, L+I

Rutland VT

Span: 91 ft

C.G. to Midspan - or +? + (user toggle for max w)

Vehicle: **HL-93**

Axle	Load, P, k	Spa, ft	Dist, XA, ft	P*X	Dist, XB, ft	R left, k	M at max pt
1	8		0	0	29.17	5.44	122.6
2	32	14	14	448	43.17	16.82	726.1
3	32	14	28	896	57.17	11.90	513.6
4	0	0	28	0	57.17	0.00	0.0
5	0	0	28	0	57.17	0.00	0.0
6	0	0	28	0	57.17	0.00	0.0
	72			1344		34.2	1362.3

truck length	28	ft
C.G. Dist	18.67	ft
C.G. Offset Dist	4.67	ft
C.G. to Midspan	2.33	ft
X to max moment Pt	43.17	ft
X/L or 1-X/L	0.47	

Loads for Moment Envelope due to Axle Loads:

equivalent distr load, w axles	1.518	k/ft for Moment per lane
correction midspan load, P axles	-9.49	k for Moment per lane
axle Max moment at X	1362.3	ft k per lane
axle moment Distribution factor	1.180	lanes
axle Impact	0.33	
w Axle (L+I)*Distr for Moment	**2.38**	**k/ft for Moment**
correction midspan load, P axles (L+I)*Distr	**-14.9**	**k for Moment (negative is up)**
axle Max moment (L+I)*Distr at X	**2138.0**	**ft k**

Loads for Shear Envelope due to Axle Loads:

axle Max end shear, Vr	64.6	k for Shear per lane
or		
w Axle (L+I)*Distr for Shear	**1.24**	**k/ft for Shear**
P midspan Axle (L+I)*Distr for Shear	**89.8**	**k at midspan for Shear**

Load for Moment and Shear due to Lane Load:

w lane	0.64	k/ft/lane
lane Distribution factor	1.180	
lane Impact	0.00	
wLane (L+I)*Distr	**0.76**	**k/ft for Moment and Shear**

Compare computed Axle Moments and Shears for equivalent loads to actuals (per lane, without Impact):

Span	X	M equ LL	V equ LL	M LL actual	V LL actual	Moment diff	Shear diff
1	0.00	0.0	64.6	0.0	64.6	0.0%	0.0%
1	9.10	522.5	57.4	522.5	57.4	0.0%	0.0%
1	18.20	919.3	50.2	913.9	50.2	-0.6%	0.0%
1	27.30	1190.3	43.0	1174.3	43.0	-1.4%	0.0%
1	36.40	1335.7	35.8	1326.1	35.8	-0.7%	0.0%
1	45.50	1355.4	-28.6	1358.0	28.6	0.2%	0.0%
1	54.60	1335.7	-35.8	1326.1	-35.8	-0.7%	0.0%
1	63.70	1190.3	-43.0	1174.3	-43.0	-1.4%	0.0%
1	72.80	919.3	-50.2	913.9	-50.2	-0.6%	0.0%
1	81.90	522.5	-57.4	522.5	-57.4	0.0%	0.0%
1	91.00	0.0	-64.6	0.0	-64.6	0.0%	0.0%

LIVE LOAD and DYNAMIC LOAD, L+I

Rutland VT

Span: 91 ft

C.G. to Midspan - or +? + (user toggle for max w)

Vehicle: **TANDEM**

Axle	Load, P, k	Spa, ft	Dist, XA, ft	P*X	Dist, XB, ft	R left, k	M at max pt
1	25		0	0	44.50	12.77	568.5
2	25	4	4	100	48.50	11.68	519.6
3	0	0	4	0	48.50	0.00	0.0
4	0	0	4	0	48.50	0.00	0.0
5	0	0	4	0	48.50	0.00	0.0
6	0	0	4	0	48.50	0.00	0.0
	50			100		24.5	1088.0

truck length	4	ft
C.G. Dist	2.00	ft
C.G. Offset Dist	2.00	ft
C.G. to Midspan	1.00	ft
X to max moment Pt	44.50	ft
X/L or 1-X/L	0.49	

Loads for Moment Envelope due to Axle Loads:

equivalent distr load, w axles	1.099	k/ft for Moment per lane
correction midspan load, P axles	-2.20	k for Moment per lane
axle Max moment at X	1088.0	ft k per lane
axle moment Distribution factor	1.180	lanes
axle Impact	0.33	
w Axle (L+I)*Distr for Moment	**1.72**	**k/ft for Moment**
correction midspan load, P axles (L+I)*Dist	**-3.4**	**k for Moment (negative is up)**
axle Max moment (L+I)*Distr at X	**1707.6**	**ft k**

Loads for Shear Envelope due to Axle Loads:

axle Max end shear, Vr	48.9	k for Shear per lane
or		
w Axle (L+I)*Distr for Shear	**0.86**	**k/ft for Shear**
P midspan Axle (L+I)*Distr for Shear	**75.0**	**k at midspan for Shear**

Load for Moment and Shear due to Lane Load:

w lane	0.64	k/ft/lane
lane Distribution factor	1.180	
lane Impact	0.00	
wLane (L+I)*Distr	**0.76**	**k/ft for Moment and Shear**

Compare computed Axle Moments and Shears for equivalent loads to actuals (per lane, without Impact):

Span	X	M equ LL	V equ LL	M LL actual	V LL actual	Moment diff	Shear diff
1	0.00	0.0	48.9	0.0	48.9	0.0%	0.0%
1	9.10	399.5	43.9	399.5	43.9	0.0%	0.0%
1	18.20	708.0	38.9	708.0	38.9	0.0%	0.0%
1	27.30	925.5	33.9	925.5	33.9	0.0%	0.0%
1	36.40	1052.0	28.9	1052.0	28.9	0.0%	0.0%
1	45.50	1087.5	-23.9	1087.5	23.9	0.0%	0.0%
1	54.60	1052.0	-28.9	1052.0	-28.9	0.0%	0.0%
1	63.70	925.5	-33.9	925.5	-33.9	0.0%	0.0%
1	72.80	708.0	-38.9	708.0	-38.9	0.0%	0.0%
1	81.90	399.5	-43.9	399.5	-43.9	0.0%	0.0%
1	91.00	0.0	-48.9	0.0	-48.9	0.0%	0.0%

LIVE LOAD and DYNAMIC LOAD, L+I

Rutland VT

Span: 91 ft
C.G. to Midspan - or +? + (user toggle for max w)

Vehicle: **LRFD FATIGUE**

Axle	Load, P, k	Spa, ft	Dist, XA, ft	P*X	Dist, XB, ft	R left, k	M at max pt
1	8		0	0	25.61	5.75	115.7
2	32	14	14	448	39.61	18.07	715.8
3	32	30	44	1408	69.61	7.52	297.9
4	0	0	44	0	69.61	0.00	0.0
5	0	0	44	0	69.61	0.00	0.0
6	0	0	44	0	69.61	0.00	0.0
	72			1856		31.3	1129.4

truck length	44	ft
C.G. Dist	25.78	ft
C.G. Offset Dist	11.78	ft
C.G. to Midspan	5.89	ft
X to max moment Pt	39.61	ft
X/L or 1-X/L	0.44	

Loads for Moment Envelope due to Axle Loads:

equivalent distr load, w axles	1.434	k/ft for Moment per lane
correction midspan load, P axles	-16.64	k for Moment per lane
axle Max moment at X	1129.4	ft k per lane
axle moment Distribution factor	0.770	lanes
axle Impact	0.15	
w Axle (L+I)*Distr for Moment	**1.27**	**k/ft for Moment**
correction midspan load, P axles (L+I)*Distr	**-14.7**	**k for Moment (negative is up)**
axle Max moment (L+I)*Distr at X	**1000.1**	**ft k**

Loads for Shear Envelope due to Axle Loads:

axle Max end shear, Vr	57.6	k for Shear per lane
or		
w Axle (L+I)*Distr for Shear	**0.70**	**k/ft for Shear**
P midspan Axle (L+I)*Distr for Shear	**38.2**	**k at midspan for Shear**

Load for Moment and Shear due to Lane Load:

w lane	0.00	k/ft/lane
lane Distribution factor	0.770	
lane Impact	0.00	
wLane (L+I)*Distr	**0.00**	**k/ft for Moment and Shear**

Compare computed Axle Moments and Shears for equivalent loads to actuals (per lane, without Impact):

Span	X	M equ LL	V equ LL	M LL actual	V LL actual	Moment diff	Shear diff
1	0.00	0.0	57.6	0.0	57.6	0.0%	0.0%
1	9.10	458.5	50.4	458.5	50.4	0.0%	0.0%
1	18.20	798.2	43.2	785.9	43.2	-1.6%	0.0%
1	27.30	1019.3	36.0	1009.5	36.0	-1.0%	0.0%
1	36.40	1121.7	28.8	1121.3	28.8	0.0%	0.0%
1	45.50	1105.3	-21.6	1102.0	21.6	-0.3%	0.0%
1	54.60	1121.7	-28.8	1121.3	-28.8	0.0%	0.0%
1	63.70	1019.3	-36.0	1009.5	-36.0	-1.0%	0.0%
1	72.80	798.2	-43.2	785.9	-43.2	-1.6%	0.0%
1	81.90	458.5	-50.4	458.5	-50.4	0.0%	0.0%
1	91.00	0.0	-57.6	0.0	-57.6	0.0%	0.0%

LIVE LOAD and DYNAMIC LOAD, L+I

Rutland VT

Span: 111 ft

C.G. to Midspan - or +? + (user toggle for max w)

Vehicle: **HL-93**

Axle	Load, P, k	Spa, ft	Dist, XA, ft	P*X	Dist, XB, ft	R left, k	M at max pt
1	8		0	0	39.17	5.18	163.3
2	32	14	14	448	53.17	16.67	886.4
3	32	14	28	896	67.17	12.64	671.8
4	0	0	28	0	67.17	0.00	0.0
5	0	0	28	0	67.17	0.00	0.0
6	0	0	28	0	67.17	0.00	0.0
	72			1344		34.5	1721.5

truck length	28	ft
C.G. Dist	18.67	ft
C.G. Offset Dist	4.67	ft
C.G. to Midspan	2.33	ft
X to max moment Pt	53.17	ft
X/L or 1-X/L	0.48	

Loads for Moment Envelope due to Axle Loads:

equivalent distr load, w axles	1.254	k/ft for Moment per lane
correction midspan load, P axles	-7.74	k for Moment per lane
axle Max moment at X	1721.5	ft k per lane
axle moment Distribution factor	1.180	lanes
axle Impact	0.33	
w Axle (L+I)*Distr for Moment	**1.97**	**k/ft for Moment**
correction midspan load, P axles (L+I)*Distr	**-12.1**	**k for Moment (negative is up)**
axle Max moment (L+I)*Distr at X	**2701.8**	**ft k**

Loads for Shear Envelope due to Axle Loads:

axle Max end shear, Vr	65.9	k for Shear per lane
axle Max midspan shear, Vm	29.9	k for Shear per lane
or		
w Axle for Shear	0.65	k/ft for Shear per lane
P midspan for Shear	59.9	k at midspan for Shear per lane
axle shear Distribution factor	1.180	lanes
axle Impact	0.330	
axle Max end shear, Vr*(L+I)*Distr	103.5	k end for Shear
axle Max midspan shear, Vm*(L+I)*Distr	47.0	k midspan for Shear
or		
w Axle (L+I)*Distr for Shear	**1.02**	**k/ft for Shear**
P midspan Axle (L+I)*Distr for Shear	**94.0**	**k at midspan for Shear**

Load for Moment and Shear due to Lane Load:

w lane	0.64	k/ft/lane
lane Distribution factor	1.180	
lane Impact	0.00	
wLane (L+I)*Distr	**0.76**	**k/ft for Moment and Shear**

Compare computed Axle Moments and Shears for equivalent loads to actuals (per lane, without L+I):

Span	X	M equ LL	V equ LL	M LL actual	V LL actual	Moment diff	Shear diff
1	0.00	0.0	65.9	0.0	65.9	0.0%	0.0%
1	11.10	652.1	58.7	652.1	58.7	0.0%	0.0%
1	22.20	1149.7	51.5	1144.3	51.5	-0.5%	0.0%
1	33.30	1492.9	44.3	1476.7	44.3	-1.1%	0.0%
1	44.40	1681.6	37.1	1671.7	37.1	-0.6%	0.0%
1	55.50	1715.9	-29.9	1718.0	29.9	0.1%	0.0%
1	66.60	1681.6	-37.1	1671.7	-37.1	-0.6%	0.0%
1	77.70	1492.9	-44.3	1476.7	-44.3	-1.1%	0.0%
1	88.80	1149.7	-51.5	1144.3	-51.5	-0.5%	0.0%
1	99.90	652.1	-58.7	652.1	-58.7	0.0%	0.0%
1	111.00	0.0	-65.9	0.0	-65.9	0.0%	0.0%

LIVE LOAD and DYNAMIC LOAD, L+I

Rutland VT

Span: 111 ft
C.G. to Midspan - or +? + (user toggle for max w)

Vehicle: **TANDEM**

Axle	Load, P, k	Spa, ft	Dist, XA, ft	P*X	Dist, XB, ft	R left, k	M at max pt
1	25		0	0	54.50	12.73	693.5
2	25	4	4	100	58.50	11.82	644.4
3	0	0	4	0	58.50	0.00	0.0
4	0	0	4	0	58.50	0.00	0.0
5	0	0	4	0	58.50	0.00	0.0
6	0	0	4	0	58.50	0.00	0.0
	50			100		24.5	1338.0

truck length	4	ft
C.G. Dist	2.00	ft
C.G. Offset Dist	2.00	ft
C.G. to Midspan	1.00	ft
X to max moment Pt	54.50	ft
X/L or 1-X/L	0.49	

Loads for Moment Envelope due to Axle Loads:

equivalent distr load, w axles	0.901	k/ft for Moment per lane
correction midspan load, P axles	-1.80	k for Moment per lane
axle Max moment at X	1338.0	ft k per lane
axle moment Distribution factor	1.180	lanes
axle Impact	0.33	
w Axle (L+I)*Distr for Moment	**1.41**	**k/ft for Moment**
correction midspan load, P axles (L+I)*Distr	**-2.8**	**k for Moment (negative is up)**
axle Max moment (L+I)*Distr at X	**2099.8**	**ft k**

Loads for Shear Envelope due to Axle Loads:

axle Max end shear, Vr	49.1	k for Shear per lane
axle Max midspan shear, Vm	24.1	k for Shear per lane
or		
w Axle for Shear	0.45	k/ft for Shear per lane
P midspan for Shear	48.2	k at midspan for Shear per lane
axle shear Distribution factor	1.180	lanes
axle Impact	0.330	
axle Max end shear, Vr*(L+I)*Distr	77.1	k end for Shear
axle Max midspan shear, Vm*(L+I)*Distr	37.8	k midspan for Shear
or		
w Axle (L+I)*Distr for Shear	**0.71**	**k/ft for Shear**
P midspan Axle (L+I)*Distr for Shear	**75.6**	**k at midspan for Shear**

Load for Moment and Shear due to Lane Load:

w lane	0.64	k/ft/lane
lane Distribution factor	1.180	
lane Impact	0.00	
wLane (L+I)*Distr	**0.76**	**k/ft for Moment and Shear**

Compare computed Axle Moments and Shears for equivalent loads to actuals (per lane, without L+I):

Span	X	M equ LL	V equ LL	M LL actual	V LL actual	Moment diff	Shear diff
1	0.00	0.0	49.1	0.0	49.1	0.0%	0.0%
1	11.10	489.5	44.1	489.5	44.1	0.0%	0.0%
1	22.20	868.0	39.1	868.0	39.1	0.0%	0.0%
1	33.30	1135.5	34.1	1135.5	34.1	0.0%	0.0%
1	44.40	1292.0	29.1	1292.0	29.1	0.0%	0.0%
1	55.50	1337.5	-24.1	1337.5	24.1	0.0%	0.0%
1	66.60	1292.0	-29.1	1292.0	-29.1	0.0%	0.0%
1	77.70	1135.5	-34.1	1135.5	-34.1	0.0%	0.0%
1	88.80	868.0	-39.1	868.0	-39.1	0.0%	0.0%
1	99.90	489.5	-44.1	489.5	-44.1	0.0%	0.0%
1	111.00	0.0	-49.1	0.0	-49.1	0.0%	0.0%

LIVE LOAD and DYNAMIC LOAD, L+I

Rutland VT

Span: 111 ft
C.G. to Midspan - or +? + (user toggle for max w)

Vehicle: **LRFD FATIGUE**

Axle	Load, P, k	Spa, ft	Dist, XA, ft	P*X	Dist, XB, ft	R left, k	M at max pt
1	8		0	0	35.61	5.43	157.6
2	32	14	14	448	49.61	17.70	878.0
3	32	30	44	1408	79.61	9.05	448.9
4	0	0	44	0	79.61	0.00	0.0
5	0	0	44	0	79.61	0.00	0.0
6	0	0	44	0	79.61	0.00	0.0
	72			1856		32.2	1484.5

truck length	44	ft
C.G. Dist	25.78	ft
C.G. Offset Dist	11.78	ft
C.G. to Midspan	5.89	ft
X to max moment Pt	49.61	ft
X/L or 1-X/L	0.45	

Loads for Moment Envelope due to Axle Loads:

equivalent distr load, w axles	1.197	k/ft for Moment per lane
correction midspan load, P axles	-13.66	k for Moment per lane
axle Max moment at X	1484.5	ft k per lane
axle moment Distribution factor	0.770	lanes
axle Impact	0.15	
w Axle (L+I)*Distr for Moment	**1.06**	**k/ft for Moment**
correction midspan load, P axles (L+I)*Distr	**-12.1**	**k for Moment (negative is up)**
axle Max moment (L+I)*Distr at X	**1314.5**	**ft k**

Loads for Shear Envelope due to Axle Loads:

axle Max end shear, Vr	60.2	k for Shear per lane
axle Max midspan shear, Vm	24.2	k for Shear per lane
or		
w Axle for Shear	0.65	k/ft for Shear per lane
P midspan for Shear	48.4	k at midspan for Shear per lane
axle shear Distribution factor	0.770	lanes
axle Impact	0.150	
axle Max end shear, Vr*(L+I)*Distr	53.3	k end for Shear
axle Max midspan shear, Vm*(L+I)*Distr	21.4	k midspan for Shear
or		
w Axle (L+I)*Distr for Shear	**0.57**	**k/ft for Shear**
P midspan Axle (L+I)*Distr for Shear	**42.8**	**k at midspan for Shear**

Load for Moment and Shear due to Lane Load:

w lane	0.00	k/ft/lane
lane Distribution factor	0.770	
lane Impact	0.00	
wLane (L+I)*Distr	**0.00**	**k/ft for Moment and Shear**

Compare computed Axle Moments and Shears for equivalent loads to actuals (per lane, without L+I):

Span	X	M equ LL	V equ LL	M LL actual	V LL actual	Moment diff	Shear diff
1	0.00	0.0	60.2	0.0	60.2	0.0%	0.0%
1	11.10	588.1	53.0	588.1	53.0	0.0%	0.0%
1	22.20	1028.6	45.8	1016.3	45.8	-1.2%	0.0%
1	33.30	1321.6	38.6	1311.9	38.6	-0.7%	0.0%
1	44.40	1467.1	31.4	1466.9	31.4	0.0%	0.0%
1	55.50	1465.0	-24.2	1462.0	24.2	-0.2%	0.0%
1	66.60	1467.1	-31.4	1466.9	-31.4	0.0%	0.0%
1	77.70	1321.6	-38.6	1311.9	-38.6	-0.7%	0.0%
1	88.80	1028.6	-45.8	1016.3	-45.8	-1.2%	0.0%
1	99.90	588.1	-53.0	588.1	-53.0	0.0%	0.0%
1	111.00	0.0	-60.2	0.0	-60.2	0.0%	0.0%

Table 3.4.6 -1 Typical Snow Removal Vehicles

Vehicle Description	Designation	Gross Vehicle Weight (kips)	Max Width (feet)	Wheel Base (feet)	Front Axle Load (kips)	Rear Axle Load (kips)	Min Bridge Rail to Rail Width (feet)
Skid Steer Figure 3.4.6 -1	HV-05-09	10	5	4	5	5	6
Pickup Truck	HV-10-09	20	6	14	6	14	10
Mid-Duty Truck*	HV-05-09	30	6	14	6	24	10

* This truck is the H-15-44 truck from the AASHTO standard specifications.

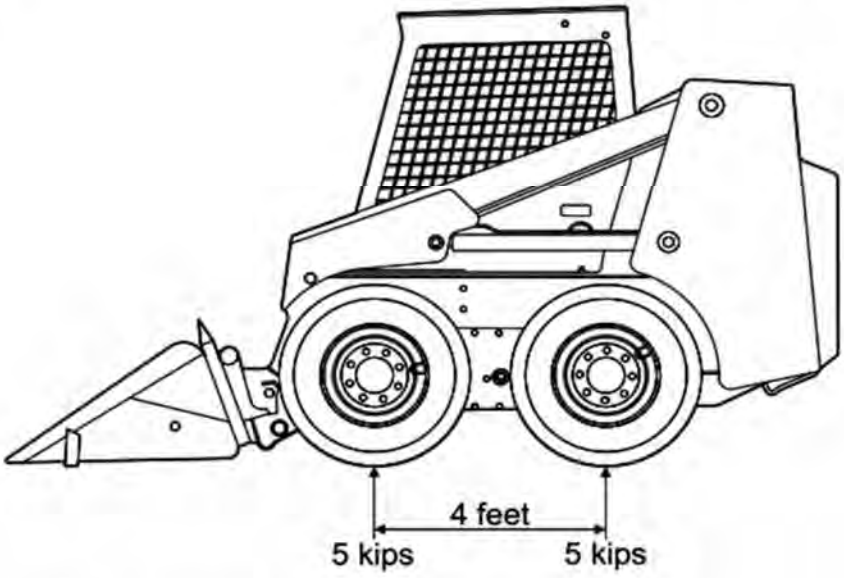

Figure 3.4.6 -1 Skid Steer Snow Removal Vehicle

B. PONY TRUSS TOP CHORD STABILITY

SUPERSTRUCTURE DESIGN CALCULATIONS FOR BRIDGE #17, RUTLAND, VT

6.14.2.9—Half Through-Trusses

The vertical truss members and the floorbeams and their connections in half through-truss spans shall be proportioned to resist a lateral force of not less than 0.30 klf applied at the top chord panel points of each truss, considered as a permanent load for the Strength I Load Combination and factored accordingly.

The top chord shall be considered as a column with elastic lateral supports at the panel points.

Find out-of-plane compression chord buckling effective length using method from AASHTO Guide Specifications for Design of Pedestrian Bridges, 2009, Chapter 7. This method has been confirmed using AISC Direct Analysis Method

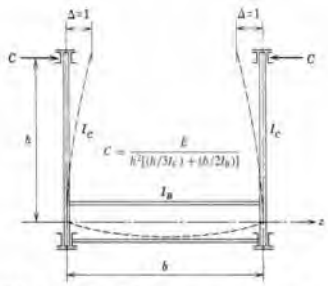

FIGURE 15.3 Frame loading for determining transverse-frame spring constant C.

TABLE 15.1 1/K for Various Values of Cl/P_y and n

	n							
1/K	4	6	8	10	12	14	16	Lutz–Fisher (1985, Eq. 15-8)
1.000	3.686	3.616	3.660	3.714	3.754	3.785	3.809	4.000
0.980		3.284	2.944	2.806	2.787	2.771	2.774	3.730
0.960		3.000	2.665	2.542	2.456	2.454	2.479	3.478
0.950			2.595					
0.940		2.754		2.303	2.252	2.254	2.282	3.244
0.920		2.643		2.146	2.094	2.101	2.121	3.026
0.900	3.352	2.593	2.263	2.045	1.951	1.968	1.981	2.822
0.850		2.460	2.013	1.794	1.709	1.681	1.694	2.372
0.800	2.961	2.313	1.889	1.629	1.480	1.456	1.465	1.993
0.750		2.147	1.750	1.501	1.344	1.273	1.262	1.673
0.700	2.448	1.955	1.595	1.359	1.200	1.111	1.088	1.401
0.650		1.739	1.442	1.236	1.087	0.988	0.940	1.169
0.600	2.035	1.639	1.338	1.133	0.985	0.878	0.808	0.970
0.550		1.517	1.211	1.007	0.860	0.768	0.708	0.798
0.500	1.750	1.362	1.047	0.847	0.750	0.668	0.600	0.648
0.450		1.158	0.829	0.714	0.624	0.537	0.500	0.519
0.400	1.232	0.886	0.627	0.555	0.454	0.428	0.383	0.406
0.350		0.530	0.434	0.352	0.323	0.292	0.280	0.309
0.300	0.121	0.187	0.249	0.170	0.203	0.183	0.187	0.226
0.293	0							
0.259		0						
0.250			0.135	0.107	0.103	0.121	0.112	0.157
0.200			0.045	0.068	0.055	0.053	0.070	0.100
0.180			0					
0.150				0.017	0.031	0.029	0.025	0.056
0.139				0				
0.114					0			
0.100						0.003	0.010	0.025
0.097						0		
0.085							0	
0								0

TOP CHORD BEAM-COLUMN RESISTANCE

Member U23-U25, Span 2, Top Chord 2

U-FRAME:

	u-frame stiffness:		
	h		**122.50**
	b		**402.00**
	Ld		**180.97**
HP14x73	lc		**729.00**
~~**W14x61**~~	ld ignore diagonal		**0.00**
W24x117	lb		**3540.00**
	vert wt		73.00
	beam wt		117.00
	C		17.13
STRI	Pu		**1388.0**
Pc=Pu*1.3	Pc		1846.0
	L top chord		**266.40**
	C*L/Pc		2.47
	1/K		0.76
	K		1.31
	n		5
	from Table 15.1:		
		0.80	**2.637**
		0.76	2.473
		0.70	**2.202**
	bm wt/2		1960
	chd wt		3769
	vert wt		745
	sum		6474

from Table 15.1

n ->	5	4	6
1/K	interpolate	CL/Pc	CL/Pc
1.00	3.651	3.686	3.616
0.90	2.973	3.352	2.593
0.80	2.637	2.961	2.313
0.70	2.202	2.448	1.955
0.60	1.837	2.035	1.639
0.50	1.556	1.750	1.362
0.40	1.059	1.232	0.886
0.30	0.154	0.121	0.187

n is number of vertical members acting as braces

6.9.2 Top chord beam-column strength

Member	U23-U25					
chord section		**W12x 230**	set with web horizontal, X-axis vertical			
	Ag	**67.70**	bf	**12.88**		
	rx	**5.97**	tf	**2.06**	tw	**1.29**
	ry	**3.31**	Ix	**2420.00**	Sx	**321.00**
	d	**15.10**	Iy	**742.00**	Sy	**115.00**

6.10.8.2 Compression-Flange Flexural Resistance

6.10.8.2.2 Local Buckling Resistance

section	W12x230	6.10.8.2.2-3	Lf	3.1
bfc	12.88	6.10.8.2.2-4	Lpf	9.2
tfc	2.06	6.10.8.2.2-5	Lrf	13.5
E	29000	6.10.8.2.2-1	Fnc1	50.0
Fy	50	6.10.8.2.2-2	Fnc2	50.0
Rb	1.00		Fnc	50.0
Rh	1.00			

6.10.8.2.3 Lateral Torsional Buckling Resistance

Lb	266.4	6.8.10.2.3-4	Lp	85.8
Cb	1.00	6.8.10.2.3-9	rt	3.56
Dc, half web for Axial controls	5.49	6.8.10.2.3-5	Lr	269.6
tw	1.29	6.8.10.2.3-8	Fcr	51.2
		6.8.10.2.3-1	Fnc1	50.0
buckling about strong axis by Fnc		6.8.10.2.3-2	Fnc2	50.0
weak axis buckling Fnc=Fy		6.8.10.2.3-3	Fnc3	51.2
			Fnc	**50.0**

6.9.2.2 Combined Axial Compression and Flexure

					X-axis:		Y-axis:	
	E	29000		6.9.4.1.2-1	Pex	5653.8	Pey	2991.4
	Kx = K from U-Frame analysis	1.31		6.9.4.1.1	Po	3385.0	Po	3385.0
4.6.2.5	Ky	1.00			Pe/Po	1.67	Pe/Po	0.88
	L top chord	266.40						
STRI	Pu	1388.0			Pnx	2634.7	Pny	2108.0
Pc=Pu*1.3	Pc	1846.0			Prx	2502.9	Pry	2002.6
	phi c	0.95						
	Q	1.00			approx Ag reqd	49.9	approx Ag reqd	62.4
	Fy	50.0			approx wt reqd	169.8	approx wt reqd	212.2
6.8.10.2.3	Fnc	50.0						
					wind pressure	50.0	vert wt	230.4
					wind load	53.7	vert ice	100.0
					LF WS	1.40	LF DC	1.25
				6.9.2.2	Mu horz	9	Mu vert	25
					phi f	1.00	phi f	1.00
					phi Mn	1338	phi Mn	479
see 4.5.3.2.2b for moment magnification				4.5.3.2.2b-4	δ	1.33	δ	1.87
				4.5.3.2.2b-1	mag. Mu horz	11.9	mag. Mu vert	47.5
				6.9.2	Pu/Prx	0.55	Pu/Pry	0.69
					6.9.2.2-2 ?< 1.0	0.65	6.9.2.2-2 ?< 1.0	0.79
			Top Chord Compression OK as beam-column? -->			**OK**		**OK**

TOP CHORD BEAM-COLUMN RESISTANCE

Member U21-U23, Span 2, Top Chord 1

U-FRAME:

	u-frame stiffness:		
	h		**122.50**
	b		**402.00**
	Ld		**180.97**
HP14x73	lc		**729.00**
~~W14x61~~	ld ignore diagonal		**0.00**
W24x117	lb		**3540.00**
	vert wt		73.00
	beam wt		117.00
	C		17.13
STRI	Pu		**935.0**
Pc=Pu*1.3	Pc		1243.6
	L top chord		**266.40**
	C*L/Pc		3.67
	1/K		1.00
	K		1.00
	n		5
	from Table 15.1:		
		1.00	**3.651**
		1.00	3.670
		0.90	**2.973**
	bm wt/2		1960
	chd wt		2311
	vert wt		745
	sum		5016

from Table 15.1

n ->	5	4	6
1/K	interpolate	CL/Pc	CL/Pc
1.00	3.651	3.686	3.616
0.90	2.973	3.352	2.593
0.80	2.637	2.961	2.313
0.70	2.202	2.448	1.955
0.60	1.837	2.035	1.639
0.50	1.556	1.750	1.362
0.40	1.059	1.232	0.886
0.30	0.154	0.121	0.187

n is number of vertical members acting as braces

6.9.2 Top chord beam-column strength

Member	U21-U23, Span 2, Top Chord 1					
chord section		**W12x 170**	set with web horizontal, X-axis vertical			
	Ag	**50.00**	bf	**12.60**		
	rx	**5.74**	tf	**1.56**	tw	**0.96**
	ry	**3.22**	Ix	**1650.00**	Sx	**235.00**
	d	**14.00**	Iy	**517.00**	Sy	**82.30**

6.10.8.2 Compression-Flange Flexural Resistance

6.10.8.2.2 Local Buckling Resistance

	section	W12x170	6.10.8.2.2-3	Lf	4.0
	bfc	12.60	6.10.8.2.2-4	Lpf	9.2
	tfc	1.56	6.10.8.2.2-5	Lrf	13.5
	E	29000	6.10.8.2.2-1	Fnc1	50.0
	Fy	50	6.10.8.2.2-2	Fnc2	50.0
	Rb	1.00		Fnc	50.0
	Rh	1.00			

6.10.8.2.3 Lateral Torsional Buckling Resistance

	Lb	266.4	6.8.10.2.3-4	Lp	84.0
	Cb	1.00	6.8.10.2.3-9	rt	3.49
	Dc, half web for Axial controls	5.44	6.8.10.2.3-5	Lr	263.8
	tw	0.96	6.8.10.2.3-8	Fcr	49.0
			6.8.10.2.3-1	Fnc1	50.0
	buckling about strong axis by Fnc		6.8.10.2.3-2	Fnc2	50.0
	weak axis buckling Fnc=Fy		6.8.10.2.3-3	Fnc3	49.0
				Fnc	**49.0**

6.9.2.2 Combined Axial Compression and Flexure

				X-axis:		Y-axis:	
	E	29000	6.9.4.1.2-1	Pex	6682.1	Pey	2090.8
	Kx = K from U-Frame analysis	1.00	6.9.4.1.1	Po	2500.0	Po	2500.0
4.6.2.5	Ky	1.00		Pe/Po	2.67	Pe/Po	0.84
	L top chord	266.40					
STRI	Pu	935.0		Pnx	2137.6	Pny	1515.6
Pc=Pu*1.3	Pc	1243.6		Prx	2030.7	Pry	1439.8
	phi c	0.95					
	Q	1.00		approx Ag reqd	30.6	approx Ag reqd	43.2
	Fy	50.0		approx wt reqd	104.1	approx wt reqd	146.8
6.8.10.2.3	Fnc	49.0					
				wind pressure	50.0	vert wt	170.1
				wind load	52.5	vert ice	100.0
				LF WS	1.40	LF DC	1.25
			6.9.2.2	Mu horz	9	Mu vert	21
				phi f	1.00	phi f	1.00
				phi Mn	960	phi Mn	343
see 4.5.3.2.2b for moment magnification			4.5.3.2.2b-4	δ	1.16	δ	1.81
			4.5.3.2.2b-1	mag. Mu horz	10.3	mag. Mu vert	37.6
			6.9.2	Pu/Prx	0.46	Pu/Pry	0.65
				6.9.2.2-2 ?< 1.0	0.57	6.9.2.2-2 ?< 1.0	0.76
		Top Chord Compression OK as beam-column? -->			**OK**		**OK**

TOP CHORD BEAM-COLUMN RESISTANCE

Member U11-U13, Span 1, Top Chord 2

U-FRAME:

	u-frame stiffness:		
	h		**122.50**
	b		**402.00**
	Ld		**180.97**
HP14x73	lc		**729.00**
~~**W14x61**~~	ld ignore diagonal		**0.00**
W24x117	lb		**3540.00**
	vert wt		73.00
	beam wt		117.00
	C		17.13
STRI	Pu		**984.0**
Pc=Pu*1.3	Pc		1308.7
	L top chord		**273.60**
	C*L/Pc		3.58
	1/K		0.99
	K		1.01
	n		5
	from Table 15.1:		
		1.00	**3.651**
		0.99	3.582
		0.90	**2.973**
	bm wt/2		1960
	chd wt		2530
	vert wt		745
	sum		5235

from Table 15.1

n ->	5	4	6
1/K	interpolate	CL/Pc	CL/Pc
1.00	3.651	3.686	3.616
0.90	2.973	3.352	2.593
0.80	2.637	2.961	2.313
0.70	2.202	2.448	1.955
0.60	1.837	2.035	1.639
0.50	1.556	1.750	1.362
0.40	1.059	1.232	0.886
0.30	0.154	0.121	0.187

n is number of vertical members acting as braces

6.9.2 Top chord beam-column strength

Member	U11-U13, Span 1, Top Chord 2					
chord section		**W12x 170**	set with web horizontal, X-axis vertical			
	Ag	**50.00**	bf	**12.60**		
	rx	**5.74**	tf	**1.56**	tw	**0.96**
	ry	**3.22**	Ix	**1650.00**	Sx	**235.00**
	d	**14.00**	Iy	**517.00**	Sy	**82.30**

6.10.8.2 Compression-Flange Flexural Resistance

6.10.8.2.2 Local Buckling Resistance

	section	W12x170	6.10.8.2.2-3	Lf	4.0
	bfc	12.60	6.10.8.2.2-4	Lpf	9.2
	tfc	1.56	6.10.8.2.2-5	Lrf	13.5
	E	29000	6.10.8.2.2-1	Fnc1	50.0
	Fy	50	6.10.8.2.2-2	Fnc2	50.0
	Rb	1.00		Fnc	50.0
	Rh	1.00			

6.10.8.2.3 Lateral Torsional Buckling Resistance

	Lb	273.6	6.8.10.2.3-4	Lp	84.0
	Cb	1.00	6.8.10.2.3-9	rt	3.49
	Dc, half web for Axial controls	5.44	6.8.10.2.3-5	Lr	263.8
	tw	0.96	6.8.10.2.3-8	Fcr	46.5
			6.8.10.2.3-1	Fnc1	50.0
	buckling about strong axis by Fnc		6.8.10.2.3-2	Fnc2	50.0
	weak axis buckling Fnc=Fy		6.8.10.2.3-3	Fnc3	46.5
				Fnc	**46.5**

6.9.2.2 Combined Axial Compression and Flexure

				X-axis:		Y-axis:	
	E	29000	6.9.4.1.2-1	Pex	6171.1	Pey	1982.2
	Kx = K from U-Frame analysis	1.01	6.9.4.1.1	Po	2500.0	Po	2500.0
4.6.2.5	Ky	1.00		Pe/Po	2.47	Pe/Po	0.79
	L top chord	273.60					
STRI	Pu	984.0		Pnx	2110.1	Pny	1474.6
Pc=Pu*1.3	Pc	1308.7		Prx	2004.6	Pry	1400.9
	phi c	0.95					
	Q	1.00		approx Ag reqd	32.6	approx Ag reqd	46.7
	Fy	50.0		approx wt reqd	111.0	approx wt reqd	158.8
6.8.10.2.3	Fnc	46.5					
				wind pressure	50.0	vert wt	170.1
				wind load	52.5	vert ice	100.0
				LF WS	1.40	LF DC	1.25
			6.9.2.2	Mu horz	9	Mu vert	22
				phi f	1.00	phi f	1.00
				phi Mn	910	phi Mn	343
see 4.5.3.2.2b for moment magnification			4.5.3.2.2b-4	δ	1.19	δ	1.99
			4.5.3.2.2b-1	mag. Mu horz	11.1	mag. Mu vert	43.6
			6.9.2	Pu/Prx	0.49	Pu/Pry	0.70
				6.9.2.2-2 ?< 1.0	0.61	6.9.2.2-2 ?< 1.0	0.83
		Top Chord Compression OK as beam-column? -->			**OK**		**OK**

BRIDGE #17 RUTLAND CITY
ROUTE TH 10 (RIPLEY ROAD) OVER OTTER CREEK
Rutland, Vermont

SUMMARY OF TRUSS TOP CHORD STABILITY DESIGN

The original pony truss replacement highway bridge was constructed in the 1930's, with open top chord truss framing. For historical requirements, the replacement bridge was required to be as similar as possible to the original bridge. Computing the compression resistance of the top chord is a deceptively complicated problem. The compression (top) chord is braced by the truss vertical members cantilevering from the floor beams. What is the unbraced length of the compression chord, with varying axial forces, and flexible vertical braces at the panel points? After notable collapses of pony trusses in the mid-1800's, an approximate compression chord capacity solution was put forth by Engesser in the late 1800's. Engesser's approach is still used today for pony truss design.

The truss top chord stability was confirmed by applying the AISC Direct Analysis Method (DM). AISC's Direct Analysis Method (DM) is particularly suited to pony truss stability design. And while DM was developed with buildings' vertical columns in mind, the DM can be applied to bridge (horizontal) structures, as modified to meet AASHTO requirements.

Until the DM was developed, the Equivalent Length Method for column design was used in the design office. For a building, a column's unbraced length is easily determined as being the distance between floors, modified (increased) for the sidesway stiffness of the bracing and beams. For a pony truss top chord, the compression chord tends to buckle in an undulating wave form along the full length, with the shape depending on the stiffness of the lateral bracing provided by the truss vertical members and floor beams. Currently available 3-dimensional, large displacement finite element programs make this problem more solvable in the usual design office, using the DM.

Classical stability approach:
Engesser's method to determine chord (column) equivalent length considering elastic bracing provided by truss verticals
Equivalent length method (ELM) for column capacity, moment magnification for secondary effects

Applying the Direct Analysis Method (DM):
AISC DM provisions for vertical framed structures
Extension of DM to horizontal compression members
AASHTO provisions for horizontal trusses
Second order non-linear large displacement analysis
Finite element modeling
Load combinations
Notional Loads for geometric imperfections
Reduced member stiffnesses for residual stresses
Second order nonlinear large deformation geometry analysis
Results of analysis for the replacement bridge showed that using Engesser's method per AASHTO Guide Spec for Design of Pedestrian Bridges, gives appropriate member sizes.

CSiBridge 2015 v17.3.0 Advanced w/Rating - truss

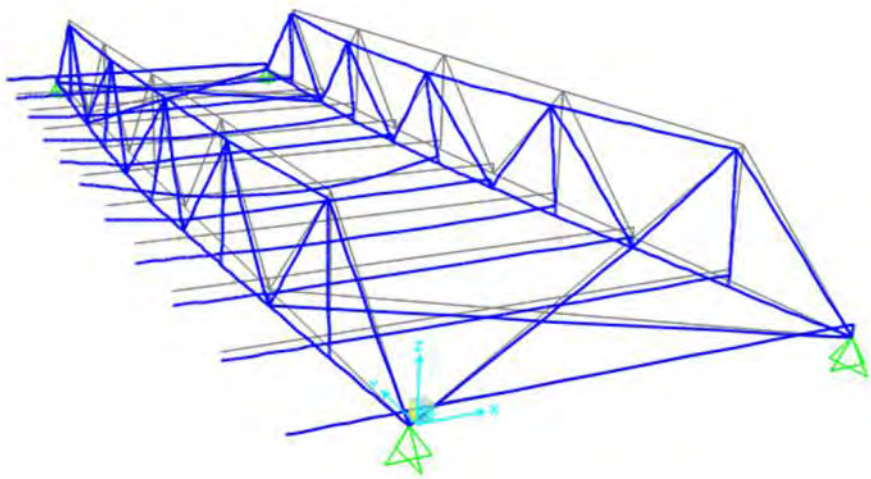

4.6.3.5—Truss Bridges

A refined plane frame or space frame analysis shall include consideration for the following:

- Composite action with the deck or deck system;
- Continuity among the components;
- Force effects due to self-weight of components, change in geometry due to deformation, and axial offset at panel points; and
- In-plane and out-of-plane buckling of components including original out-of-straightness, continuity among the components and the effect axial forces present in those components.

Out-of-plane buckling of the upper chords of pony truss bridges shall be investigated. If the truss derives its lateral stability from transverse frames, of which the floorbeams are a part, the deformation of the floorbeams due to vehicular loading shall be considered.

C4.6.3.5

Load applied to deck or floorbeams instead of to truss joints will yield results that more completely quantify out-of-plane actions.

Experience has shown that dead load force effects calculated using either plane frame or space frame analysis in a truss with properly cambered primary and secondary members and detailed to minimize eccentricity at joints, will be quite close to those calculated by the conventional approximations. In many cases, a complete three-dimensional frame analysis may be the only way to accurately calculate forces in secondary members, particularly live load force effects.

6.14.2.9—Half Through-Trusses

The vertical truss members and the floorbeams and their connections in half through-truss spans shall be proportioned to resist a lateral force of not less than 0.30 klf applied at the top chord panel points of each truss, considered as a permanent load for the Strength I Load Combination and factored accordingly.

The top chord shall be considered as a column with elastic lateral supports at the panel points.

C. TRUSS MEMBER FORCES FOR DESIGN

SUPERSTRUCTURE DESIGN CALCULATIONS FOR BRIDGE #17, RUTLAND, VT

VT truss span 1, for Member Design
Units: feet, kips

LinPro 2.7.5
File: C:\Users\densfo_t\Documents\LinPro files\vt truss span 1 REV 3.aln
Units: kN-m

Input Data

Coordinates of joints/supports

Joint	X	Y	Rx	Ry	Rt	SPRING.X	SPRING.Y	SPRING.ROT	CS.ROT
0	0.000	0.000	1	1	0	0.00E+000	0.00E+000	0.00E+000	0.00
1	11.375	0.000	0	0	0	0.00E+000	0.00E+000	0.00E+000	0.00
2	22.750	0.000	0	0	0	0.00E+000	0.00E+000	0.00E+000	0.00
3	34.125	0.000	0	0	0	0.00E+000	0.00E+000	0.00E+000	0.00
4	45.500	0.000	0	0	0	0.00E+000	0.00E+000	0.00E+000	0.00
5	56.875	0.000	0	0	0	0.00E+000	0.00E+000	0.00E+000	0.00
6	68.250	0.000	0	0	0	0.00E+000	0.00E+000	0.00E+000	0.00
7	79.625	0.000	0	0	0	0.00E+000	0.00E+000	0.00E+000	0.00
8	91.000	0.000	0	1	0	0.00E+000	0.00E+000	0.00E+000	0.00
9	11.375	11.250	0	0	0	0.00E+000	0.00E+000	0.00E+000	0.00
10	34.125	11.250	0	0	0	0.00E+000	0.00E+000	0.00E+000	0.00
11	56.875	11.250	0	0	0	0.00E+000	0.00E+000	0.00E+000	0.00
12	79.625	11.250	0	0	0	0.00E+000	0.00E+000	0.00E+000	0.00

Members

Member	Joint I	Joint J	Type	Releases
0:	0	1	BOT CHORD1	111111
1:	1	2	BOT CHORD1	111111
2:	2	3	BOT CHORD1	111111
3:	3	4	BOT CHORD1	111111
4:	4	5	BOT CHORD1	111111
5:	5	6	BOT CHORD1	111111
6:	6	7	BOT CHORD1	111111
7:	7	8	BOT CHORD1	111111
8:	0	9	END DIAGONAL	111111
9:	9	2	DIAGONAL	111111
10:	2	10	DIAGONAL	111111
11:	10	4	DIAGONAL	111111
12:	4	11	DIAGONAL	111111
13:	11	6	DIAGONAL	111111
14:	6	12	DIAGONAL	111111
15:	12	8	END DIAGONAL	111111
16:	1	9	VERTICAL	111111
17:	3	10	VERTICAL	111111
18:	5	11	VERTICAL	111111
19:	7	12	VERTICAL	111111
20:	9	10	TOP CHORD1	111111
21:	10	11	TOP CHORD1	111111
22:	11	12	TOP CHORD1	111111

Cross Sections

0: BOT CHORD1
A= 1.840E-01
I= 1.000E-04
E= 4176000.00
alpha= 1.2E-05

1: TOP CHORD1
A= 3.470E-01
I= 1.000E-04
E= 4176000.00
alpha= 1.2E-05

2: DIAGONAL
A= 1.240E-01
I= 1.000E-04
E= 4176000.00
alpha= 1.2E-05

3: VERTICAL
A= 1.490E-01
I= 1.000E-04
E= 4176000.00
alpha= 1.2E-05

4: END DIAGONAL
A= 3.472E+03
I= 1.000E-04
E= 4176000.00
alpha= 1.2E-05

```
Load
   0: Distributed Load
           Load Case: DC1  STEEL WT
           Load Name: Distributed
           Coordinate System: Global Y
           a= 0.00
           b= 1.00  On Member
           p1= -1.00
           p2= -1.00

   1: Distributed Load
           Load Case: DC2  DECK
           Load Name: Distributed
           Coordinate System: Global Y
           a= 0.00
           b= 1.00  On Member
           p1= -1.95
           p2= -1.95

   2: Distributed Load
           Load Case: DC3  SDL LT
           Load Name: Distributed
           Coordinate System: Global Y
           a= 0.00
           b= 1.00  On Member
           p1= -1.10
           p2= -1.10

   3: Distributed Load
           Load Case: DW  FWS UTIL
           Load Name: Distributed
           Coordinate System: Global Y
           a= 0.00
           b= 1.00  On Member
           p1= -0.60
           p2= -0.60

   4: Distributed Load
           Load Case: DC3  SDL RT
           Load Name: Distributed
           Coordinate System: Global Y
           a= 0.00
           b= 1.00  On Member
           p1= -0.20
           p2= -0.20

   5: Distributed Load
           Load Case: DC1  STEEL WT
           Load Name: Distributed
           Coordinate System: Global Y
           a= 0.00
           b= 1.00  On Member
           p1= -0.85
           p2= -0.85

   6: Distributed Load
           Load Case: DC3  SDL LT
           Load Name: Distributed
           Coordinate System: Global Y
           a= 0.00
           b= 1.00  On Member
           p1= -1.00
           p2= -1.00

   7: Distributed Load
           Load Case: L+I  MOMENT TRUCK ENV
           Load Name: Distributed
           Coordinate System: Global Y
           a= 0.00
           b= 1.00  On Member
           p1= -2.38
           p2= -2.38

   8: Distributed Load
           Load Case: L+I  SHEAR TRUCK ENV
           Load Name: Distributed
           Coordinate System: Global Y
           a= 0.00
           b= 1.00  On Member
```

```
        p1= -1.24
        p2= -1.24

9: Distributed Load
        Load Case: L+I  M&V LANE
        Load Name: Distributed
        Coordinate System: Global Y
        a= 0.00
        b= 1.00  On Member
        p1= -0.76
        p2= -0.76

10: Distributed Load
        Load Case: FATIGUE MOMENT ENV
        Load Name: Distributed
        Coordinate System: Global Y
        a= 0.00
        b= 1.00  On Member
        p1= -1.95
        p2= -1.95

11: Distributed Load
        Load Case: FATIGUE SHEAR ENV
        Load Name: Distributed
        Coordinate System: Global Y
        a= 0.00
        b= 1.00  On Member
        p1= -1.07
        p2= -1.07

12: Distributed Load
        Load Case: DC1  STEEL WT
        Load Name: Distributed
        Coordinate System: Global Y
        a= 0.00
        b= 1.00  On Member
        p1= -3.80
        p2= -3.80

13: Distributed Load
        Load Case: DC DEAD LT
        Load Name: Distributed
        Coordinate System: Global Y
        a= 0.00
        b= 1.00  On Member
        p1= -3.80
        p2= -3.80

14: Point Load
        Load Case: L+I  MOMENT TRUCK ENV
        Load Name: Point
        Coordinate System: Global
        a= 0.00  Absolute from Joint I
        Force X= 0.00
        Force Y= 14.90
        Moment M= 0.00

15: Point Load
        Load Case: L+I  SHEAR TRUCK ENV
        Load Name: Point
        Coordinate System: Global
        a= 0.00  Absolute from Joint I
        Force X= 0.00
        Force Y= -89.80
        Moment M= 0.00

16: Point Load
        Load Case: FATIGUE MOMENT ENV
        Load Name: Point
        Coordinate System: Global
        a= 0.00  Absolute from Joint I
        Force X= 0.00
        Force Y= 22.60
        Moment M= 0.00

17: Point Load
        Load Case: FATIGUE SHEAR ENV
        Load Name: Point
        Coordinate System: Global
        a= 0.00  Absolute from Joint I
        Force X= 0.00
        Force Y= -58.60
```

```
        Moment M= 0.00

18: Distributed Load
        Load Case: FATIGUE MOMENT ENV
        Load Name: Distributed
        Coordinate System: Global Y
        a= 0.00
        b= 1.00  On Member
        p1= -1.27
        p2= -1.27

19: Distributed Load
        Load Case: FATIGUE SHEAR ENV
        Load Name: Distributed
        Coordinate System: Global Y
        a= 0.00
        b= 1.00  On Member
        p1= -0.70
        p2= -0.70

20: Point Load
        Load Case: FATIGUE MOMENT ENV
        Load Name: Point
        Coordinate System: Global
        a= 0.00  Absolute from Joint I
        Force X= 0.00
        Force Y= 14.70
        Moment M= 0.00

21: Point Load
        Load Case: FATIGUE SHEAR ENV
        Load Name: Point
        Coordinate System: Global
        a= 0.00  Absolute from Joint I
        Force X= 0.00
        Force Y= -38.20
        Moment M= 0.00

22: Distributed Load
        Load Case: UNIT DISTR DOWN -1.0 K/FT
        Load Name: Distributed
        Coordinate System: Global Y
        a= 0.00
        b= 1.00  On Member
        p1= 1.00
        p2= 1.00

23: Point Load
        Load Case: UNIT POINT MIDSPAN UP +1.0 K
        Load Name: Point
        Coordinate System: Global
        a= 0.00  Absolute from Joint I
        Force X= 0.00
        Force Y= 1.00
        Moment M= 0.00

24: Distributed Load
        Load Case: UNIT DISTR DOWN -1.0 K/FT
        Load Name: Distributed
        Coordinate System: Global Y
        a= 0.00
        b= 1.00  On Member
        p1= -1.00
        p2= -1.00

25: Point Load
        Load Case: UNIT POINT MIDSPAN DOWN -1.0 K
        Load Name: Point
        Coordinate System: Global
        a= 0.00  Absolute from Joint I
        Force X= 0.00
        Force Y= -1.00
        Moment M= 0.00

26: Distributed Load
        Load Case: UNIT DISTR DOWN -1.0 K/FT
        Load Name: Distributed
        Coordinate System: Global Y
        a= 0.00
        b= 1.00  On Member
        p1= -1.00
        p2= -1.00
```

VT truss span 1, for Member Design
Units: feet, kips

Load Applied on Joints

Joint	Applied Loads
4:	14, 15, 20, 21, 23, 25

Load Applied on Members

Member	Applied Loads
0:	1, 3, 4, 5, 6, 7, 8, 9, 13, 18, 19, 26
1:	1, 3, 4, 5, 6, 7, 8, 9, 13, 18, 19, 24
2:	1, 3, 4, 5, 6, 7, 8, 9, 13, 18, 19, 24
3:	1, 3, 4, 5, 6, 7, 8, 9, 13, 18, 19, 24
4:	1, 3, 4, 5, 6, 7, 8, 9, 13, 18, 19, 24
5:	1, 3, 4, 5, 6, 7, 8, 9, 13, 18, 19, 24
6:	1, 3, 4, 5, 6, 7, 8, 9, 13, 18, 19, 24
7:	1, 3, 4, 5, 6, 7, 8, 9, 13, 18, 19, 24

Load Cases

0: DC1 STEEL WT
1: DC2 DECK
2: DC3 SDL LT
3: DW FWS UTIL
4: L+I MOMENT TRUCK ENV
5: L+I SHEAR TRUCK ENV
6: L+I M&V LANE
7: DC3 SDL RT
8: FATIGUE MOMENT ENV
9: FATIGUE SHEAR ENV
10: DC DEAD LT
11: UNIT DISTR DOWN -1.0 K/FT
12: UNIT POINT MIDSPAN UP +1.0 K
13: UNIT POINT MIDSPAN DOWN -1.0 K

Load Combinations

0: SCV I DEAD DEFL LT = 1.00xDC1 STEEL WT + 1.00xDC2 DECK + 1.00xDC3 SDL LT + 1.00xDW FWS UTIL + 0.00xL+I MOME
M&V LANE + 0.00xDC3 SDL RT + 0.00xFATIGUE MOMENT ENV + 0.00xFATIGUE SHEAR ENV + 0.00xDC DEAD LT + 0.00xUNIT DISTR DOU
0.00xUNIT POINT MIDSPAN DOWN -1.0 K

1: SVC I DEAD DEFL RT = 1.00xDC1 STEEL WT + 1.00xDC2 DECK + 0.00xDC3 SDL LT + 1.00xDW FWS UTIL + 0.00xL+I MOME
M&V LANE + 1.00xDC3 SDL RT + 0.00xFATIGUE MOMENT ENV + 0.00xFATIGUE SHEAR ENV + 0.00xDC DEAD LT + 0.00xUNIT DISTR DOU
0.00xUNIT POINT MIDSPAN DOWN -1.0 K

2: STRI MOMENT = 0.00xDC1 STEEL WT + 0.00xDC2 DECK + 0.00xDC3 SDL LT + 1.50xDW FWS UTIL + 1.75xL+I MOMENT TRUC
LANE + 0.00xDC3 SDL RT + 0.00xFATIGUE MOMENT ENV + 0.00xFATIGUE SHEAR ENV + 1.25xDC DEAD LT + 0.00xUNIT DISTR DOWN -1
0.00xUNIT POINT MIDSPAN DOWN -1.0 K

3: STRI SHEAR = 0.00xDC1 STEEL WT + 0.00xDC2 DECK + 0.00xDC3 SDL LT + 1.50xDW FWS UTIL + 0.00xL+I MOMENT TRUCK
LANE + 0.00xDC3 SDL RT + 0.00xFATIGUE MOMENT ENV + 0.00xFATIGUE SHEAR ENV + 1.25xDC DEAD LT + 0.00xUNIT DISTR DOWN -1
0.00xUNIT POINT MIDSPAN DOWN -1.0 K

4: SVCII MOMENT = 0.00xDC1 STEEL WT + 0.00xDC2 DECK + 0.00xDC3 SDL LT + 1.00xDW FWS UTIL + 1.30xL+I MOMENT TRU
LANE + 0.00xDC3 SDL RT + 0.00xFATIGUE MOMENT ENV + 0.00xFATIGUE SHEAR ENV + 1.00xDC DEAD LT + 0.00xUNIT DISTR DOWN -1
0.00xUNIT POINT MIDSPAN DOWN -1.0 K

5: SVCII SHEAR = 0.00xDC1 STEEL WT + 0.00xDC2 DECK + 0.00xDC3 SDL LT + 1.00xDW FWS UTIL + 0.00xL+I MOMENT TRUC
LANE + 0.00xDC3 SDL RT + 0.00xFATIGUE MOMENT ENV + 0.00xFATIGUE SHEAR ENV + 1.00xDC DEAD LT + 0.00xUNIT DISTR DOWN -1
0.00xUNIT POINT MIDSPAN DOWN -1.0 K

6: FATGI MOMENT = 0.00xDC1 STEEL WT + 0.00xDC2 DECK + 0.00xDC3 SDL LT + 0.00xDW FWS UTIL + 0.00xL+I MOMENT TRU
LANE + 0.00xDC3 SDL RT + 1.50xFATIGUE MOMENT ENV + 0.00xFATIGUE SHEAR ENV + 0.00xDC DEAD LT + 0.00xUNIT DISTR DOWN -1
0.00xUNIT POINT MIDSPAN DOWN -1.0 K

7: FATGI SHEAR = 0.00xDC1 STEEL WT + 0.00xDC2 DECK + 0.00xDC3 SDL LT + 0.00xDW FWS UTIL + 0.00xL+I MOMENT TRUC
LANE + 0.00xDC3 SDL RT + 0.00xFATIGUE MOMENT ENV + 1.50xFATIGUE SHEAR ENV + 0.00xDC DEAD LT + 0.00xUNIT DISTR DOWN -1
0.00xUNIT POINT MIDSPAN DOWN -1.0 K

8: L+I MOMENT 3S2 ENV = 0.00xDC1 STEEL WT + 0.00xDC2 DECK + 0.00xDC3 SDL LT + 0.00xDW FWS UTIL + 0.00xL+I MOME
M&V LANE + 0.00xDC3 SDL RT + 0.00xFATIGUE MOMENT ENV + 0.00xFATIGUE SHEAR ENV + 0.00xDC DEAD LT + 1.73xUNIT DISTR DOU
0.00xUNIT POINT MIDSPAN DOWN -1.0 K

9: L+I SHEAR 3S2 ENV = 0.00xDC1 STEEL WT + 0.00xDC2 DECK + 0.00xDC3 SDL LT + 0.00xDW FWS UTIL + 0.00xL+I MOMEN
M&V LANE + 0.00xDC3 SDL RT + 0.00xFATIGUE MOMENT ENV + 0.00xFATIGUE SHEAR ENV + 0.00xDC DEAD LT + 0.97xUNIT DISTR DOU
72.70xUNIT POINT MIDSPAN DOWN -1.0 K

10: L+I MOMENT 6AXLE ENV = 0.00xDC1 STEEL WT + 0.00xDC2 DECK + 0.00xDC3 SDL LT + 0.00xDW FWS UTIL + 0.00xL+I M
0.00xL+I M&V LANE + 0.00xDC3 SDL RT + 0.00xFATIGUE MOMENT ENV + 0.00xFATIGUE SHEAR ENV + 0.00xDC DEAD LT + 3.26xUNIT
+1.0 K + 0.00xUNIT POINT MIDSPAN DOWN -1.0 K

11: L+I SHEAR 6AXLE ENV = 0.00xDC1 STEEL WT + 0.00xDC2 DECK + 0.00xDC3 SDL LT + 0.00xDW FWS UTIL + 0.00xL+I MO
0.00xL+I M&V LANE + 0.00xDC3 SDL RT + 0.00xFATIGUE MOMENT ENV + 0.00xFATIGUE SHEAR ENV + 0.00xDC DEAD LT + 1.77xUNIT
+1.0 K + 118.00xUNIT POINT MIDSPAN DOWN -1.0 K

12: L+I MOMENT 3AXLE ENV = 0.00xDC1 STEEL WT + 0.00xDC2 DECK + 0.00xDC3 SDL LT + 0.00xDW FWS UTIL + 0.00xL+I M
0.00xL+I M&V LANE + 0.00xDC3 SDL RT + 0.00xFATIGUE MOMENT ENV + 0.00xFATIGUE SHEAR ENV + 0.00xDC DEAD LT + 1.58xUNIT
+1.0 K + 0.00xUNIT POINT MIDSPAN DOWN -1.0 K

13: L+I SHEAR 3AXLE ENV = 0.00xDC1 STEEL WT + 0.00xDC2 DECK + 0.00xDC3 SDL LT + 0.00xDW FWS UTIL + 0.00xL+I MO
0.00xL+I M&V LANE + 0.00xDC3 SDL RT + 0.00xFATIGUE MOMENT ENV + 0.00xFATIGUE SHEAR ENV + 0.00xDC DEAD LT + 0.81xUNIT
+1.0 K + 80.70xUNIT POINT MIDSPAN DOWN -1.0 K

14: L+I MOMENT 4AXLE ENV = 0.00xDC1 STEEL WT + 0.00xDC2 DECK + 0.00xDC3 SDL LT + 0.00xDW FWS UTIL + 0.00xL+I M
0.00xL+I M&V LANE + 0.00xDC3 SDL RT + 0.00xFATIGUE MOMENT ENV + 0.00xFATIGUE SHEAR ENV + 0.00xDC DEAD LT + 1.79xUNIT
+1.0 K + 0.00xUNIT POINT MIDSPAN DOWN -1.0 K

15: L+I SHEAR 4AXLE ENV = 0.00xDC1 STEEL WT + 0.00xDC2 DECK + 0.00xDC3 SDL LT + 0.00xDW FWS UTIL + 0.00xL+I MO

0.00xL+I M&V LANE + 0.00xDC3 SDL RT + 0.00xFATIGUE MOMENT ENV + 0.00xFATIGUE SHEAR ENV + 0.00xDC DEAD LT + 0.93xUNI
+1.0 K + 89.30xUNIT POINT MIDSPAN DOWN -1.0 K
16: L+I MOMENT 5AXLE ENV = 0.00xDC1 STEEL WT + 0.00xDC2 DECK + 0.00xDC3 SDL LT + 0.00xDW FWS UTIL + 0.00xL+I M
0.00xL+I M&V LANE + 0.00xDC3 SDL RT + 0.00xFATIGUE MOMENT ENV + 0.00xFATIGUE SHEAR ENV + 0.00xDC DEAD LT + 1.86xUNI
+1.0 K + 0.00xUNIT POINT MIDSPAN DOWN -1.0 K
17: L+I SHEAR 5AXLE ENV = 0.00xDC1 STEEL WT + 0.00xDC2 DECK + 0.00xDC3 SDL LT + 0.00xDW FWS UTIL + 0.00xL+I MO
0.00xL+I M&V LANE + 0.00xDC3 SDL RT + 0.00xFATIGUE MOMENT ENV + 0.00xFATIGUE SHEAR ENV + 0.00xDC DEAD LT + 1.02xUNI
+1.0 K + 83.80xUNIT POINT MIDSPAN DOWN -1.0 K
18: L+I MOMENT H20 ENV = 0.00xDC1 STEEL WT + 0.00xDC2 DECK + 0.00xDC3 SDL LT + 0.00xDW FWS UTIL + 0.00xL+I MON
+I M&V LANE + 0.00xDC3 SDL RT + 0.00xFATIGUE MOMENT ENV + 0.00xFATIGUE SHEAR ENV + 0.00xDC DEAD LT + 1.07xUNIT DISTR
0.00xUNIT POINT MIDSPAN DOWN -1.0 K
19: L+I SHEAR H20 ENV = 0.00xDC1 STEEL WT + 0.00xDC2 DECK + 0.00xDC3 SDL LT + 0.00xDW FWS UTIL + 0.00xL+I MOMI
M&V LANE + 0.00xDC3 SDL RT + 0.00xFATIGUE MOMENT ENV + 0.00xFATIGUE SHEAR ENV + 0.00xDC DEAD LT + 0.54xUNIT DISTR DOU
56.60xUNIT POINT MIDSPAN DOWN -1.0 K

Masses

Masses Applied on Joints
Joint Applied Masses

==========
Static Analysis Results

Load Case: DW FWS UTIL

Reactions in global CS

Joint	Rx	Ry	M
0	0.000000	27.300000	0.000000
8	0.000000	27.300000	0.000000

Load Case: L+I MOMENT TRUCK ENV

Reactions in global CS

Joint	Rx	Ry	M
0	0.000000	100.840000	0.000000
8	0.000000	100.840000	0.000000

Load Case: L+I SHEAR TRUCK ENV

Reactions in global CS

Joint	Rx	Ry	M
0	0.000000	101.320000	0.000000
8	0.000000	101.320000	0.000000

Load Case: L+I M&V LANE

Reactions in global CS

Joint	Rx	Ry	M
0	0.000000	34.580000	0.000000
8	0.000000	34.580000	0.000000

Load Case: FATIGUE MOMENT ENV

Reactions in global CS

Joint	Rx	Ry	M
0	0.000000	50.435000	0.000000
8	0.000000	50.435000	0.000000

Load Case: FATIGUE SHEAR ENV

Reactions in global CS

Joint	Rx	Ry	M
0	0.000000	50.950000	0.000000
8	0.000000	50.950000	0.000000

Load Case: DC DEAD LT

Reactions in global CS

Joint	Rx	Ry	M
0	0.000000	172.900000	0.000000
8	0.000000	172.900000	0.000000

Load Case: UNIT DISTR DOWN -1.0 K/FT

Reactions in global CS

Joint	Rx	Ry	M
0	0.000000	45.500000	0.000000
8	0.000000	45.500000	0.000000

Load Case: UNIT POINT MIDSPAN UP +1.0 K

Reactions in global CS

Joint	Rx	Ry	M
0	0.000000	-0.500000	0.000000
8	0.000000	-0.500000	0.000000

Load Case: UNIT POINT MIDSPAN DOWN -1.0 K

Reactions in global CS

Joint	Rx	Ry	M
0	0.000000	0.500000	0.000000
8	0.000000	0.500000	0.000000

Load Combination: STRI MOMENT = 0.00xDC1 STEEL WT + 0.00xDC2 DECK + 0.00xDC3 SDL LT + 1.50xDW FWS UTIL + 1.75xL+I
M&V LANE + 0.00xDC3 SDL RT + 0.00xFATIGUE MOMENT ENV + 0.00xFATIGUE SHEAR ENV + 1.25xDC DEAD LT + 0.00xUNIT DISTR DOU
0.00xUNIT POINT MIDSPAN DOWN -1.0 K

Reactions in global CS

Joint	Rx	Ry	M
0	0.000000	494.060000	0.000000
8	0.000000	494.060000	0.000000

Load Combination: STRI SHEAR = 0.00xDC1 STEEL WT + 0.00xDC2 DECK + 0.00xDC3 SDL LT + 1.50xDW FWS UTIL + 0.00xL+I
M&V LANE + 0.00xDC3 SDL RT + 0.00xFATIGUE MOMENT ENV + 0.00xFATIGUE SHEAR ENV + 1.25xDC DEAD LT + 0.00xUNIT DISTR DOU
0.00xUNIT POINT MIDSPAN DOWN -1.0 K

Reactions in global CS

Joint	Rx	Ry	M
0	0.000000	494.900000	0.000000
8	0.000000	494.900000	0.000000

Load Combination: SVCII MOMENT = 0.00xDC1 STEEL WT + 0.00xDC2 DECK + 0.00xDC3 SDL LT + 1.00xDW FWS UTIL + 1.30xL+I
M&V LANE + 0.00xDC3 SDL RT + 0.00xFATIGUE MOMENT ENV + 0.00xFATIGUE SHEAR ENV + 1.00xDC DEAD LT + 0.00xUNIT DISTR DOU
0.00xUNIT POINT MIDSPAN DOWN -1.0 K

Reactions in global CS

Joint	Rx	Ry	M
0	0.000000	376.246000	0.000000
8	0.000000	376.246000	0.000000

VT truss span 1, for Member Design
Units: feet, kips

Load Combination: SVCII SHEAR = 0.00xDC1 STEEL WT + 0.00xDC2 DECK + 0.00xDC3 SDL LT + 1.00xDW FWS UTIL + 0.00xL+I
M&V LANE + 0.00xDC3 SDL RT + 0.00xFATIGUE MOMENT ENV + 0.00xFATIGUE SHEAR ENV + 1.00xDC DEAD LT + 0.00xUNIT DISTR DOW
0.00xUNIT POINT MIDSPAN DOWN -1.0 K

Reactions in global CS

Joint	Rx	Ry	M
0	0.000000	376.870000	0.000000
8	0.000000	376.870000	0.000000

Load Combination: FATGI MOMENT = 0.00xDC1 STEEL WT + 0.00xDC2 DECK + 0.00xDC3 SDL LT + 0.00xDW FWS UTIL + 0.00xL+I
M&V LANE + 0.00xDC3 SDL RT + 1.50xFATIGUE MOMENT ENV + 0.00xFATIGUE SHEAR ENV + 0.00xDC DEAD LT + 0.00xUNIT DISTR DOW
0.00xUNIT POINT MIDSPAN DOWN -1.0 K

Reactions in global CS

Joint	Rx	Ry	M
0	0.000000	75.652500	0.000000
8	0.000000	75.652500	0.000000

Load Combination: FATGI SHEAR = 0.00xDC1 STEEL WT + 0.00xDC2 DECK + 0.00xDC3 SDL LT + 0.00xDW FWS UTIL + 0.00xL+I
M&V LANE + 0.00xDC3 SDL RT + 0.00xFATIGUE MOMENT ENV + 1.50xFATIGUE SHEAR ENV + 0.00xDC DEAD LT + 0.00xUNIT DISTR DOW
0.00xUNIT POINT MIDSPAN DOWN -1.0 K

Reactions in global CS

Joint	Rx	Ry	M
0	0.000000	76.425000	0.000000
8	0.000000	76.425000	0.000000

VT truss span 1, for Member Design
Units: feet, kips

Structure, Load Case: DW FWS UTIL

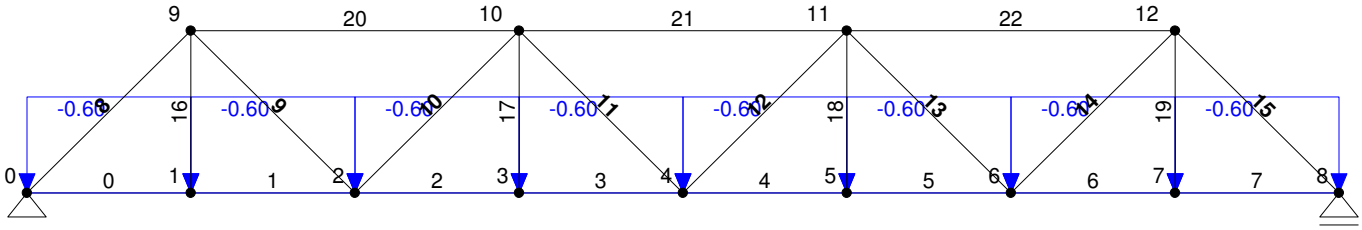

VT truss span 1, for Member Design
Units: feet, kips

Structure, Load Case: L+I MOMENT TRUCK ENV

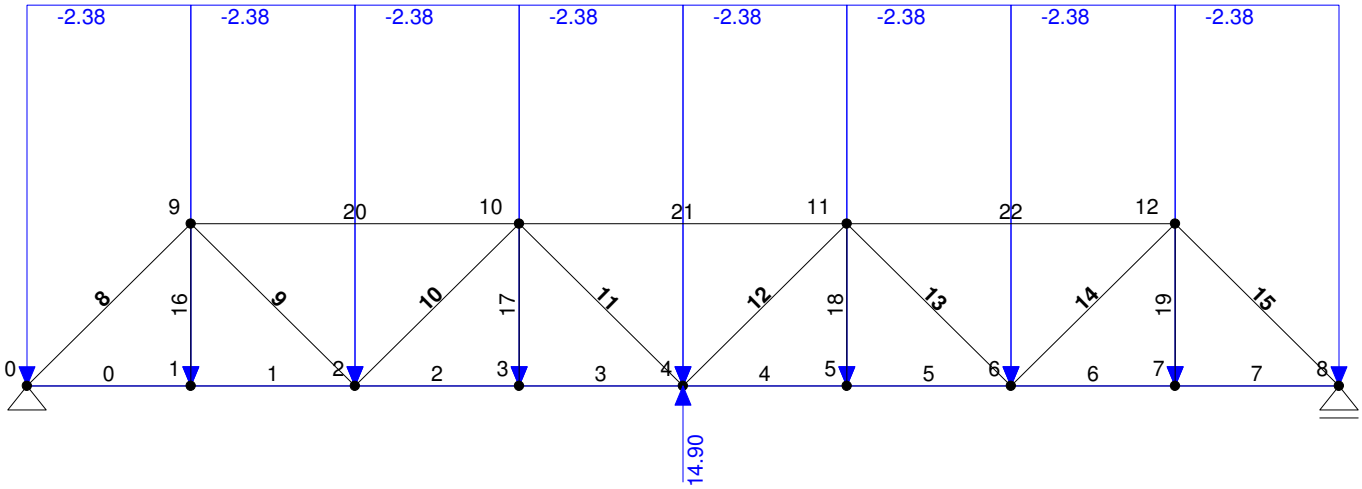

VT truss span 1, for Member Design
Units: feet, kips

Structure, Load Case: L+I SHEAR TRUCK ENV

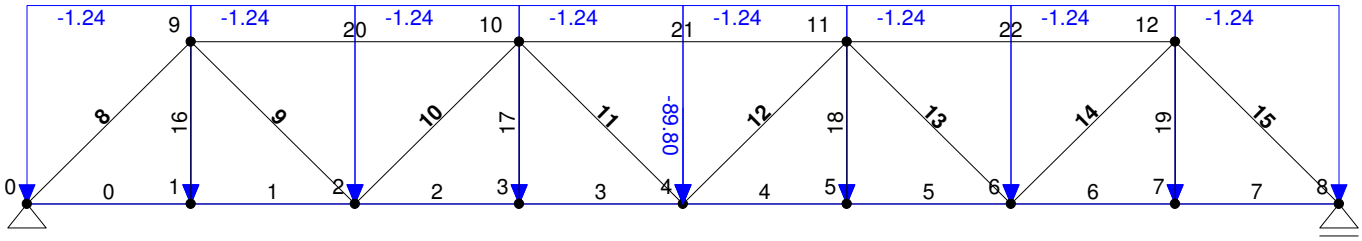

VT truss span 1, for Member Design
Units: feet, kips

Structure, Load Case: L+I M&V LANE

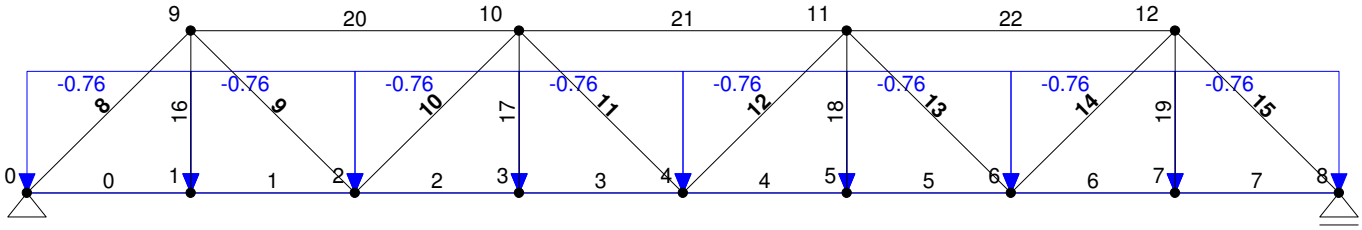

VT truss span 1, for Member Design
Units: feet, kips

Structure, Load Case: FATIGUE MOMENT ENV

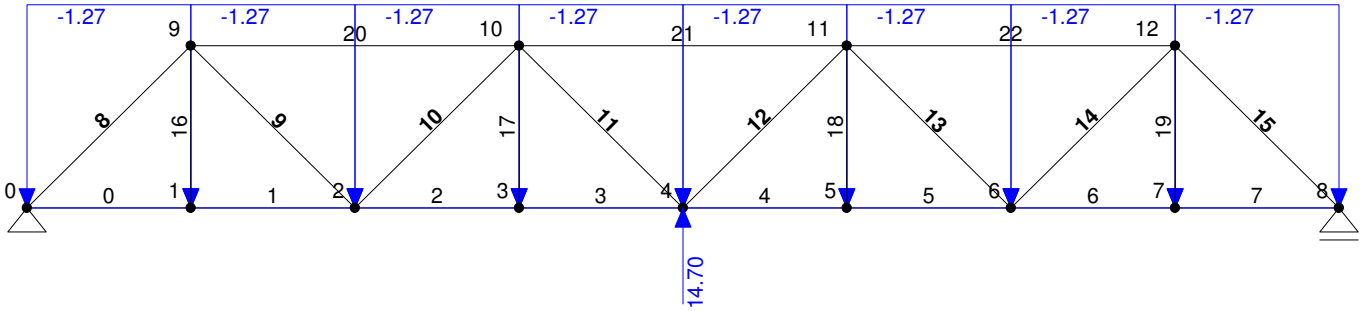

VT truss span 1, for Member Design
Units: feet, kips

Structure, Load Case: FATIGUE SHEAR ENV

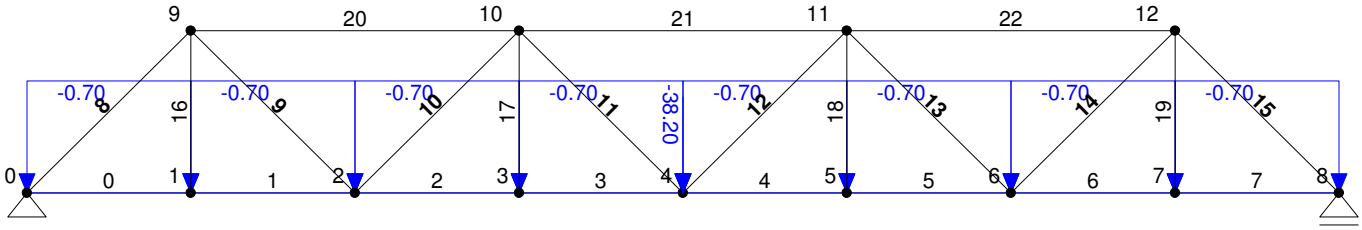

VT truss span 1, for Member Design
Units: feet, kips

Structure, Load Case: DC DEAD LT

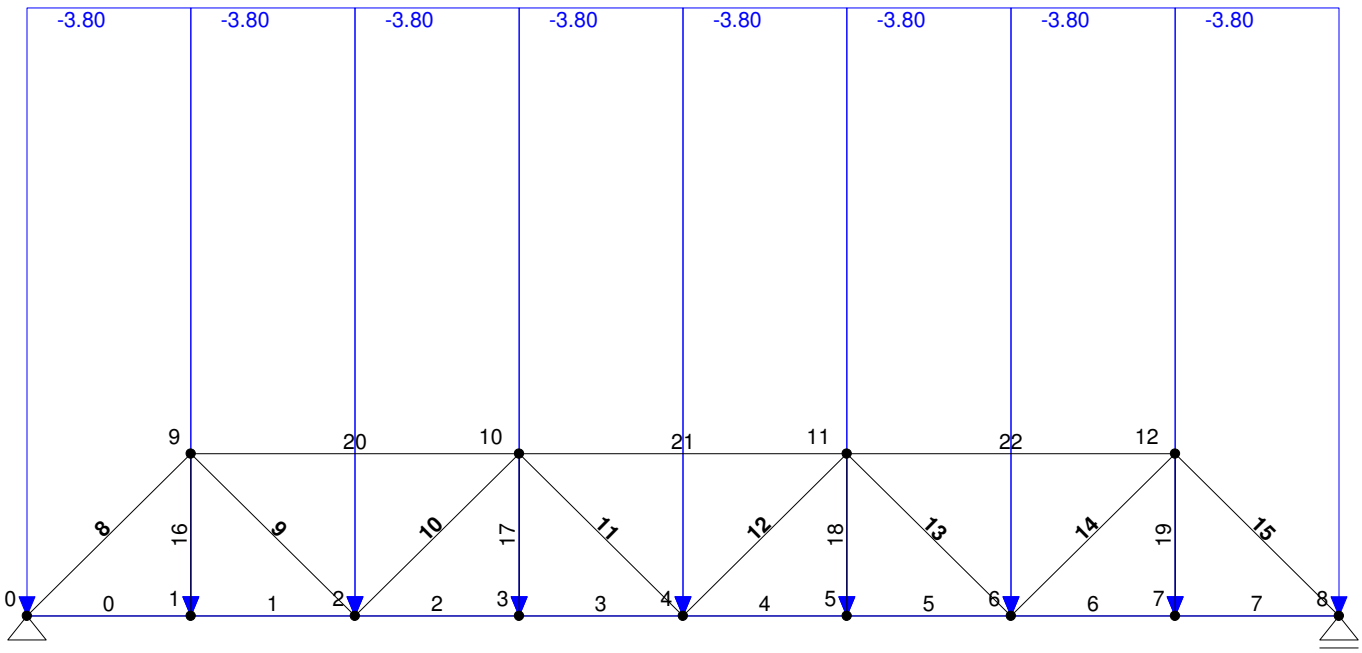

VT truss span 1, for Member Design
Units: feet, kips

Structure, Load Case: UNIT DISTR DOWN -1.0 K/FT

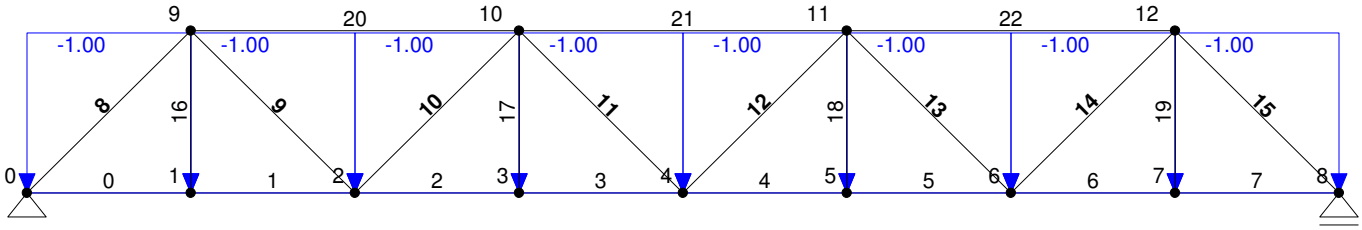

VT truss span 1, for Member Design
Units: feet, kips

Structure, Load Case: UNIT POINT MIDSPAN UP +1.0 K

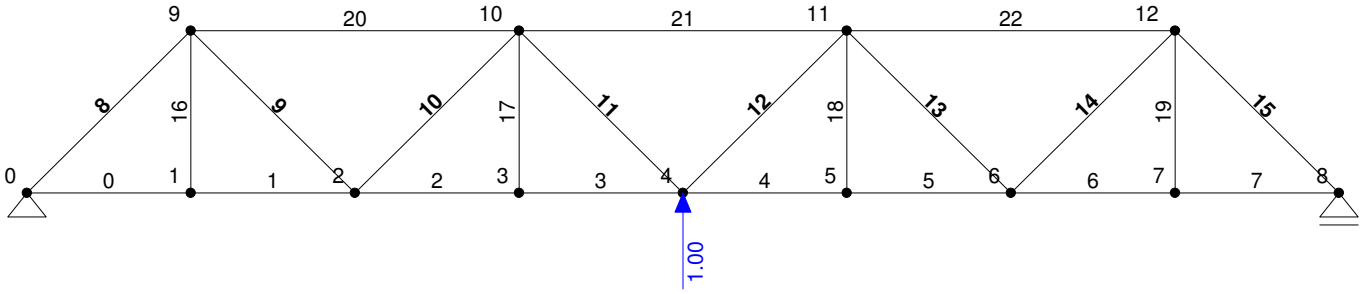

VT truss span 1, for Member Design
Units: feet, kips
Structure, Load Case: UNIT POINT MIDSPAN DOWN -1.0 K

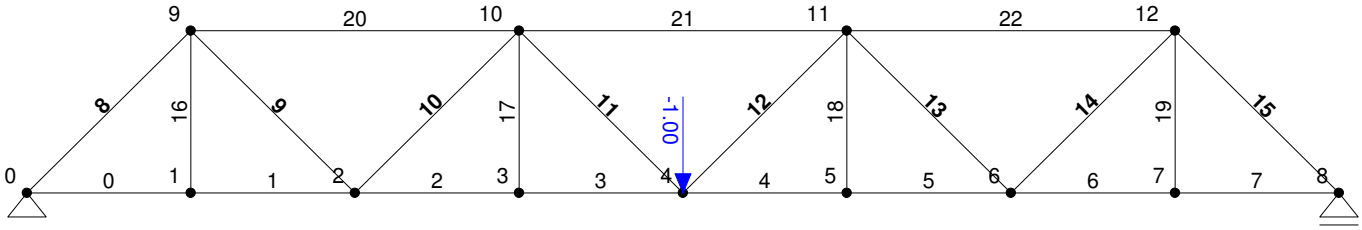

VT truss span 1, for Member Design
Units: feet, kips

Axial Force Diagram, Case: DW FWS UTIL

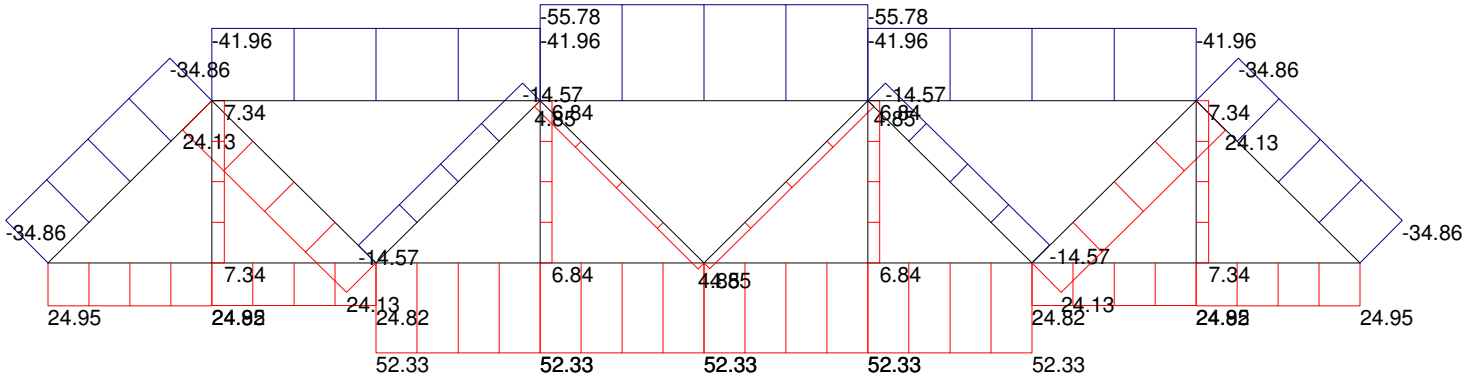

VT truss span 1, for Member Design
Units: feet, kips

Axial Force Diagram, Case: L+I MOMENT TRUCK ENV

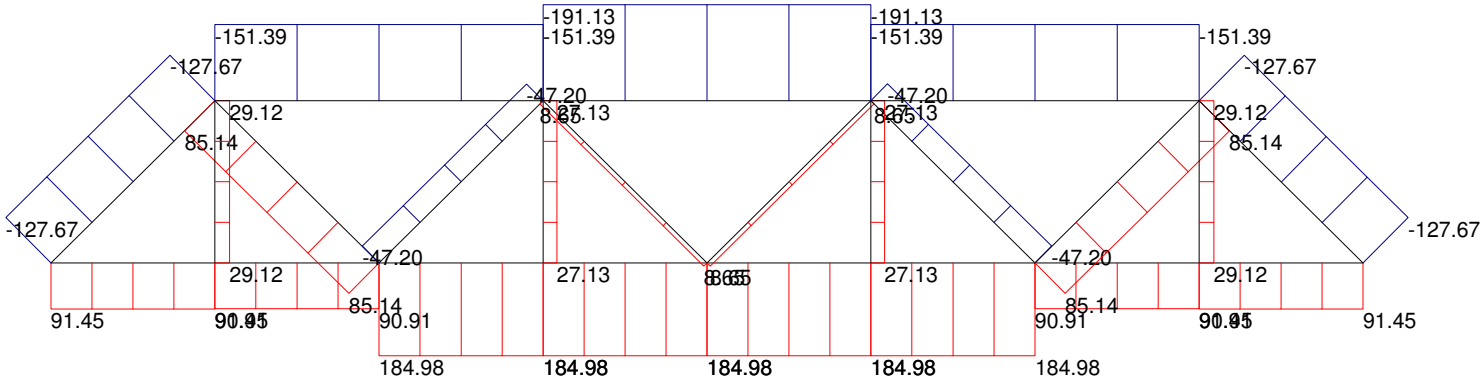

VT truss span 1, for Member Design
Units: feet, kips

Axial Force Diagram, Case: L+I SHEAR TRUCK ENV

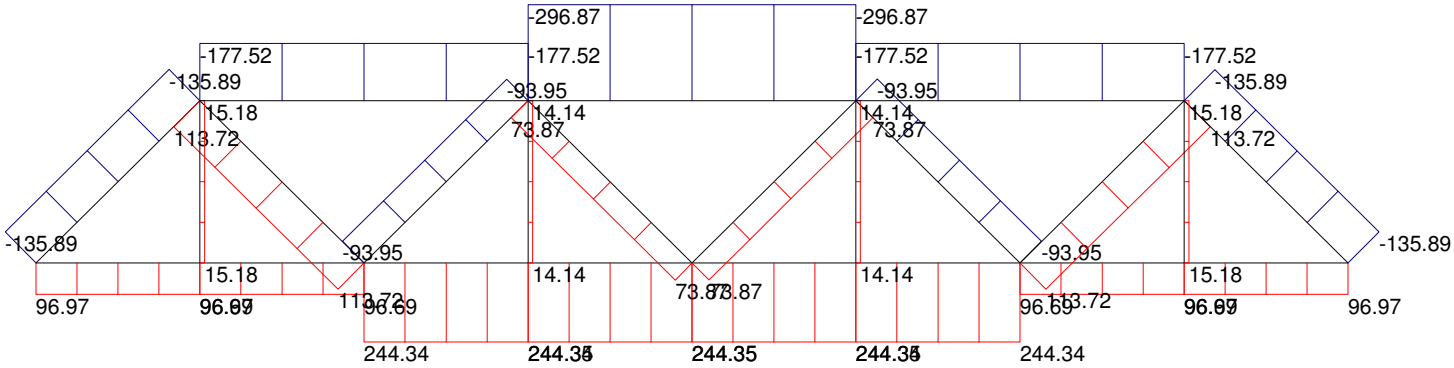

VT truss span 1, for Member Design
Units: feet, kips

Axial Force Diagram, Case: L+I M&V LANE

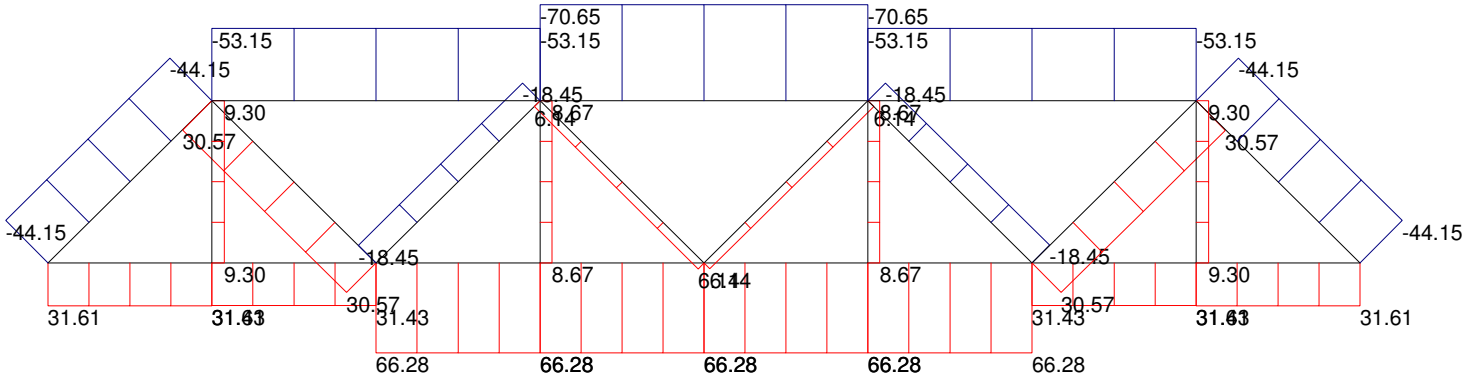

VT truss span 1, for Member Design
Units: feet, kips

Axial Force Diagram, Case: FATIGUE MOMENT ENV

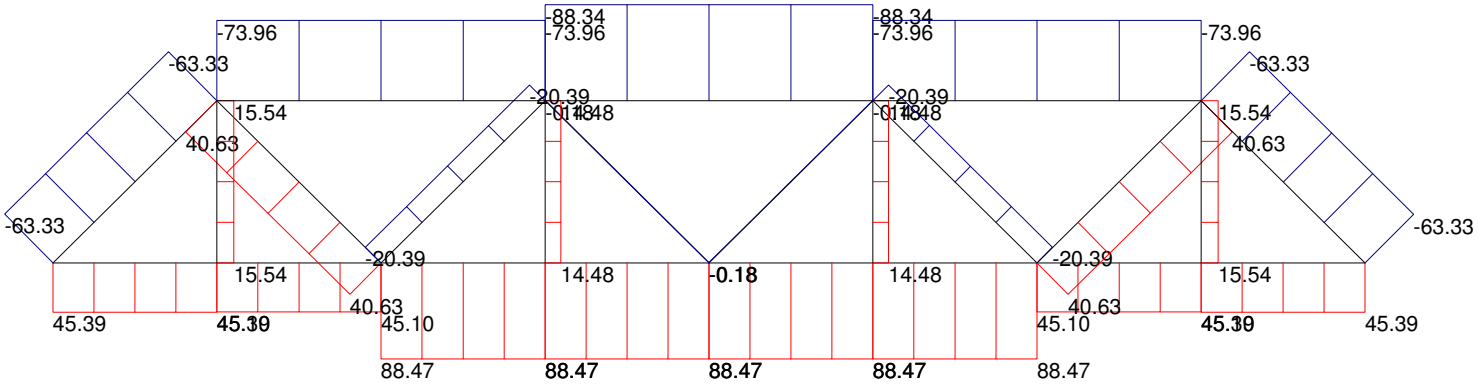

VT truss span 1, for Member Design
Units: feet, kips

Axial Force Diagram, Case: FATIGUE SHEAR ENV

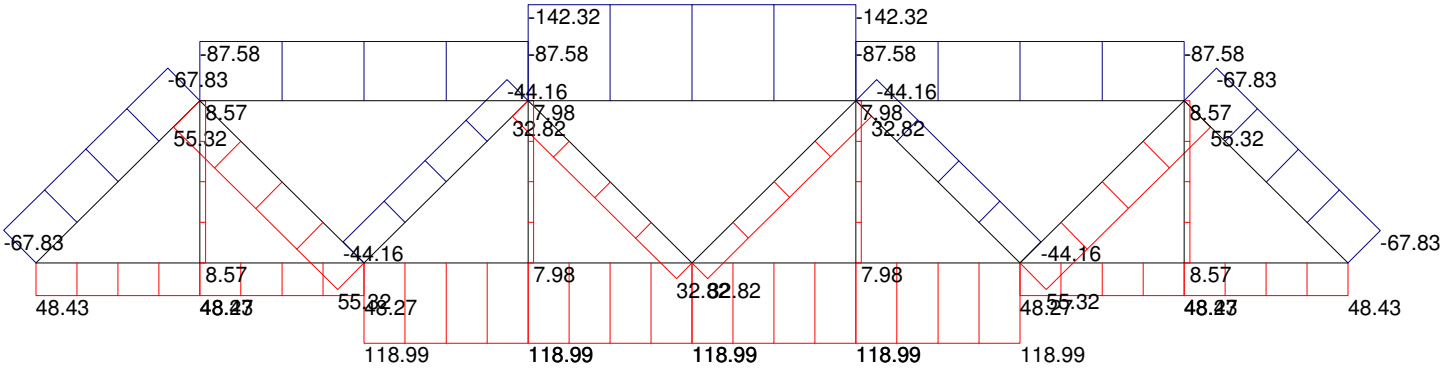

VT truss span 1, for Member Design
Units: feet, kips

Axial Force Diagram, Case: DC DEAD LT

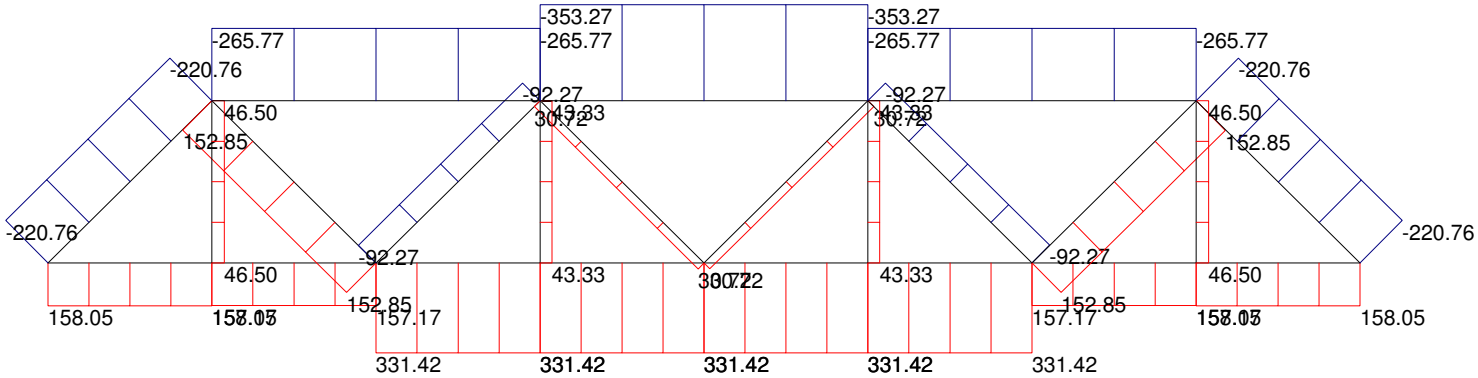

VT truss span 1, for Member Design
Units: feet, kips

Axial Force Diagram, Case: UNIT DISTR DOWN -1.0 K/FT

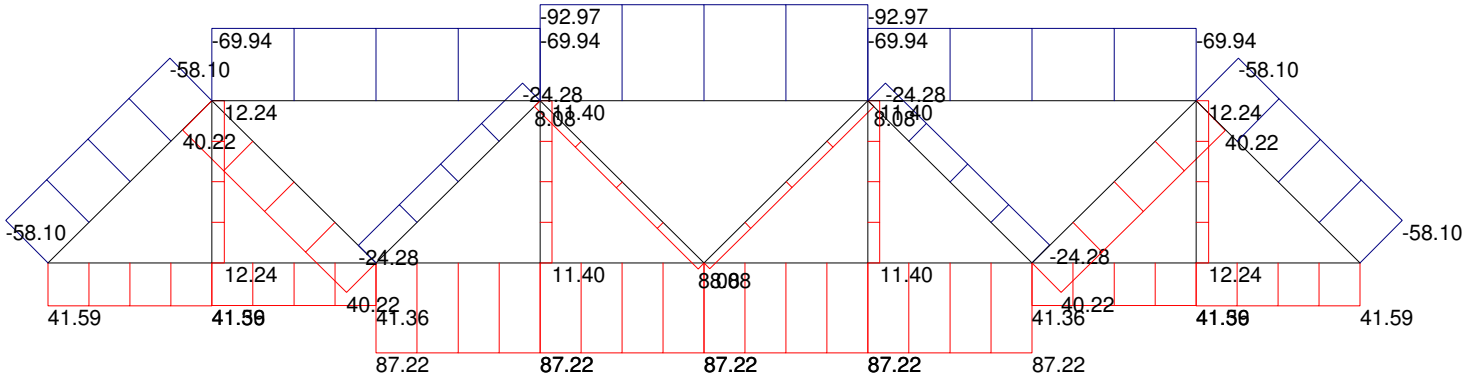

VT truss span 1, for Member Design
Units: feet, kips

Axial Force Diagram, Case: UNIT POINT MIDSPAN UP +1.0 K

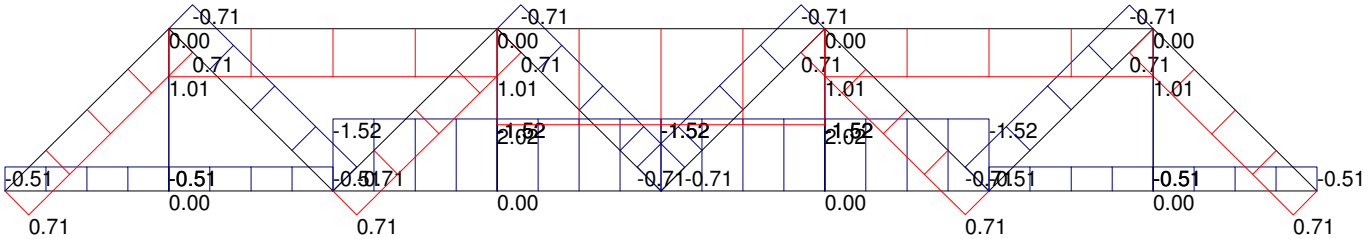

VT truss span 1, for Member Design
Units: feet, kips

Axial Force Diagram, Case: UNIT POINT MIDSPAN DOWN -1.0 K

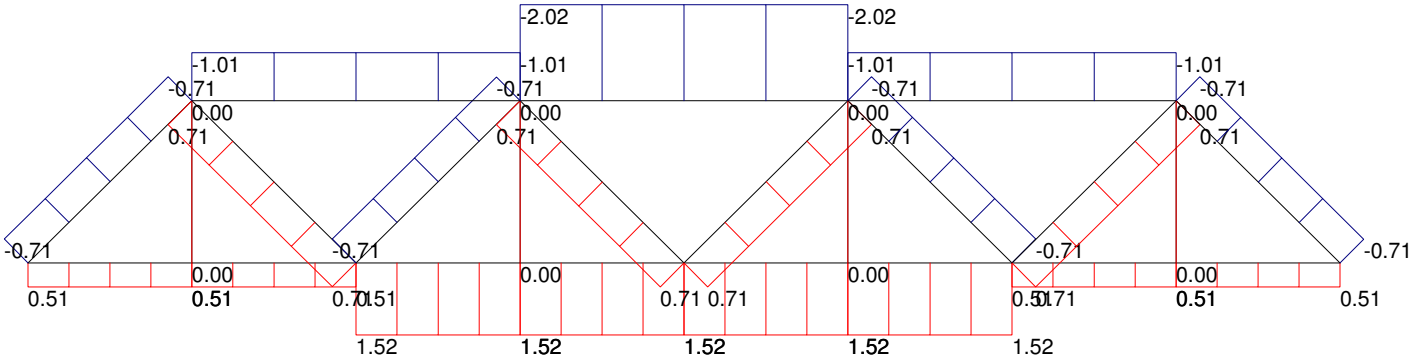

VT truss span 1, for Member Design
Units: feet, kips

Axial Force Diagram, Comb: STRI MOMENT

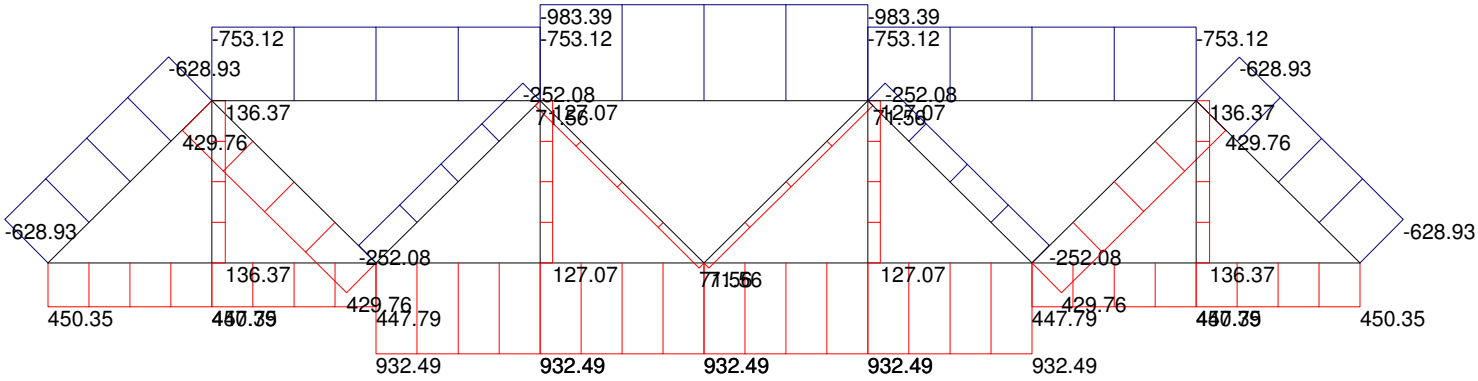

VT truss span 1, for Member Design
Units: feet, kips

Axial Force Diagram, Comb: STRI SHEAR

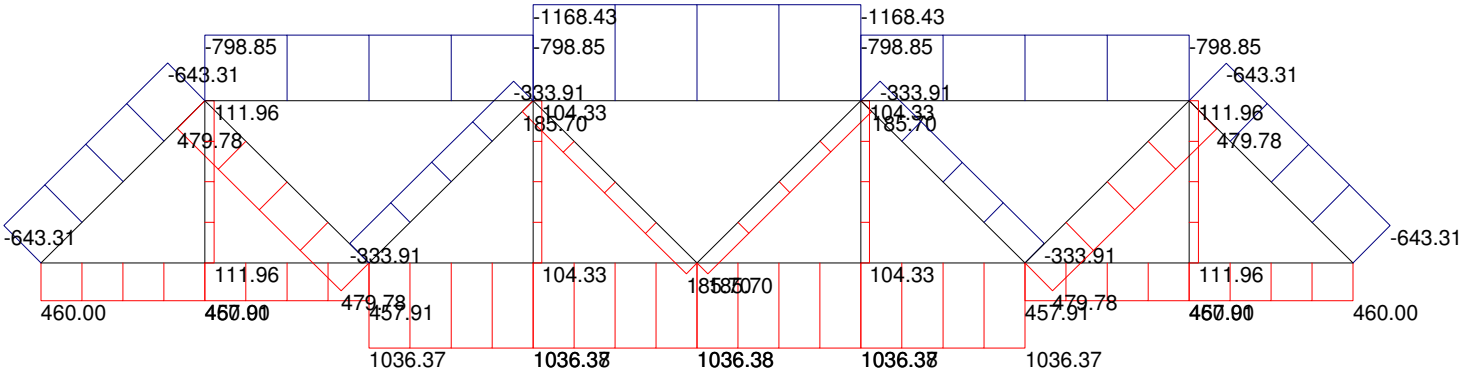

VT truss span 1, for Member Design
Units: feet, kips

Axial Force Diagram, Comb: SVCII MOMENT

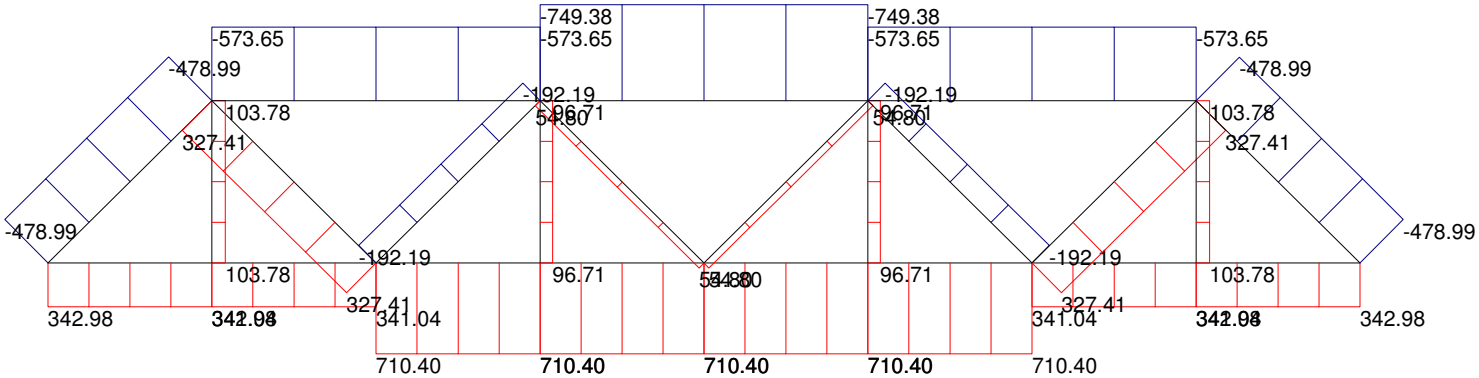

VT truss span 1, for Member Design
Units: feet, kips

Axial Force Diagram, Comb: SVCII SHEAR

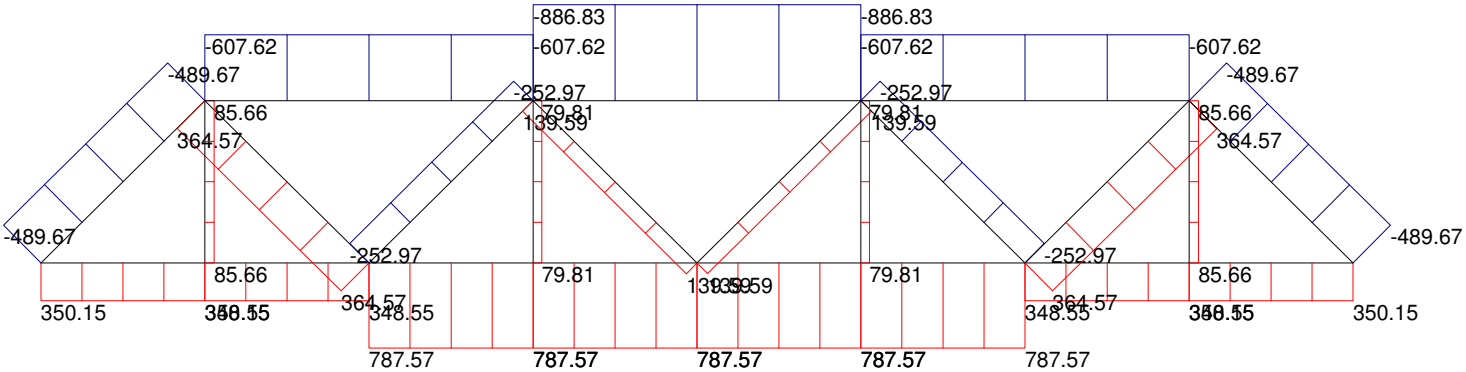

VT truss span 1, for Member Design
Units: feet, kips

Axial Force Diagram, Comb: FATGI MOMENT

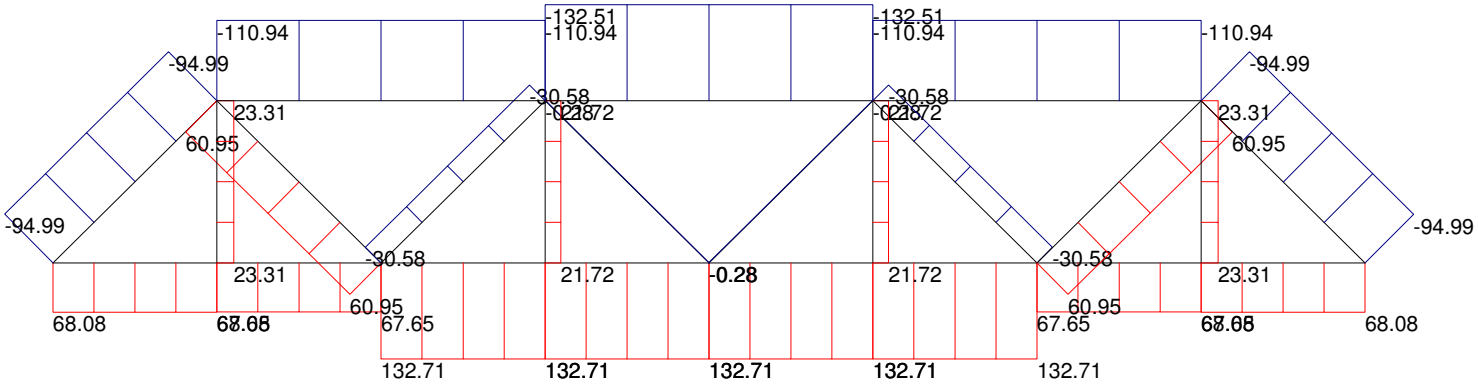

VT truss span 1, for Member Design
Units: feet, kips

Axial Force Diagram, Comb: FATGI SHEAR

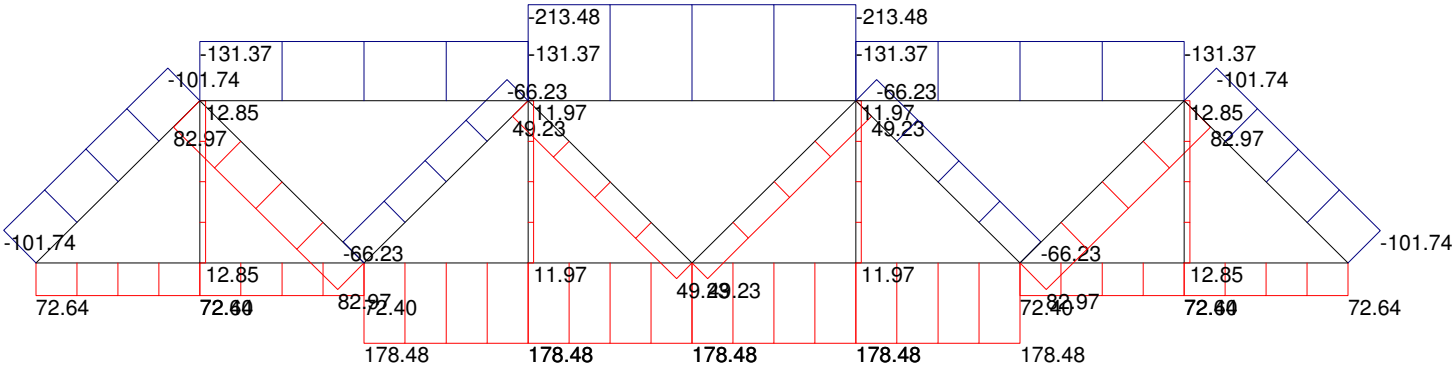

Rutland VT truss span 2, for Member Design

LinPro 2.7.5
File: C:\Users\densfo_t\Documents\LinPro files\vt truss span 2 REV 6.aln
Units: kN-m

Input Data

Coordinates of joints/supports

Joint	X	Y	Rx	Ry	Rt	SPRING.X	SPRING.Y	SPRING.ROT	CS.ROT
0	0.000	0.000	1	1	0	0.00E+000	0.00E+000	0.00E+000	0.00
1	11.100	0.000	0	0	0	0.00E+000	0.00E+000	0.00E+000	0.00
2	22.200	0.000	0	0	0	0.00E+000	0.00E+000	0.00E+000	0.00
3	33.300	0.000	0	0	0	0.00E+000	0.00E+000	0.00E+000	0.00
4	44.400	0.000	0	0	0	0.00E+000	0.00E+000	0.00E+000	0.00
5	55.500	0.000	0	0	0	0.00E+000	0.00E+000	0.00E+000	0.00
6	66.600	0.000	0	0	0	0.00E+000	0.00E+000	0.00E+000	0.00
7	77.700	0.000	0	0	0	0.00E+000	0.00E+000	0.00E+000	0.00
8	88.800	0.000	0	0	0	0.00E+000	0.00E+000	0.00E+000	0.00
9	99.900	0.000	0	0	0	0.00E+000	0.00E+000	0.00E+000	0.00
10	111.000	0.000	0	1	0	0.00E+000	0.00E+000	0.00E+000	0.00
11	11.100	11.250	0	0	0	0.00E+000	0.00E+000	0.00E+000	0.00
12	33.300	11.250	0	0	0	0.00E+000	0.00E+000	0.00E+000	0.00
13	55.500	11.250	0	0	0	0.00E+000	0.00E+000	0.00E+000	0.00
14	77.700	11.250	0	0	0	0.00E+000	0.00E+000	0.00E+000	0.00
15	99.900	11.250	0	0	0	0.00E+000	0.00E+000	0.00E+000	0.00

Members

Member	Joint I	Joint J	Type	Releases
0:	0	1	BOT CHORD1	111111
1:	1	2	BOT CHORD1	111111
2:	2	3	BOT CHORD2	111111
3:	3	4	BOT CHORD2	111111
4:	4	5	BOT CHORD3	111111
5:	5	6	BOT CHORD3	111111
6:	6	7	BOT CHORD2	111111
7:	7	8	BOT CHORD2	111111
8:	8	9	BOT CHORD1	111111
9:	9	10	BOT CHORD1	111111
10:	0	11	END POST	111111
11:	11	2	DIAGONAL	111111
12:	2	12	DIAGONAL	111111
13:	12	4	DIAGONAL	111111
14:	4	13	DIAGONAL	111111
15:	13	6	DIAGONAL	111111
16:	6	14	DIAGONAL	111111
17:	14	8	DIAGONAL	111111
18:	8	15	DIAGONAL	111111
19:	15	10	END POST	111111
20:	1	11	VERTICAL	111111
21:	3	12	VERTICAL	111111
22:	5	13	VERTICAL	111111
23:	7	14	VERTICAL	111111
24:	9	15	VERTICAL	111111
25:	11	12	TOP CHORD1	111111
26:	12	13	TOP CHORD2	111111
27:	13	14	TOP CHORD2	111111
28:	14	15	TOP CHORD1	111111

Cross Sections

```
   0: BOT CHORD1
           A= 1.840E-01
           I= 1.000E-04
           E= 4176000.00
           alpha= 1.2E-05

   1: TOP CHORD1
           A= 3.470E-01
           I= 1.000E-04
           E= 4176000.00
           alpha= 1.2E-05

   2: DIAGONAL
           A= 1.240E-01
           I= 1.000E-04
           E= 4176000.00
           alpha= 1.2E-05

   3: VERTICAL
           A= 1.490E-01
```

```
          I= 1.000E-04
          E= 4176000.00
          alpha= 1.2E-05

   4: BOT CHORD2
          A= 2.021E-01
          I= 1.000E-04
          E= 4176000.00
          alpha= 1.2E-05

   5: TOP CHORD2
          A= 4.700E-01
          I= 1.000E-04
          E= 4176000.00
          alpha= 1.2E-05

   6: END POST
          A= 1.840E-01
          I= 1.000E-04
          E= 4176000.00
          alpha= 1.2E-05

   7: BOT CHORD3
          A= 2.451E-01
          I= 1.000E-04
          E= 4176000.00
          alpha= 1.2E-05



Load
   0: Distributed Load
          Load Case: DC1  STEEL WT
          Load Name: Distributed
          Coordinate System: Global Y
          a= 0.00
          b= 1.00  On Member
          p1= -1.35
          p2= -1.35

   1: Distributed Load
          Load Case: DC2  DECK
          Load Name: Distributed
          Coordinate System: Global Y
          a= 0.00
          b= 1.00  On Member
          p1= -1.95
          p2= -1.95

   2: Distributed Load
          Load Case: DC3  SDL LT
          Load Name: Distributed
          Coordinate System: Global Y
          a= 0.00
          b= 1.00  On Member
          p1= -1.10
          p2= -1.10

   3: Distributed Load
          Load Case: DW  FWS UTIL
          Load Name: Distributed
          Coordinate System: Global Y
          a= 0.00
          b= 1.00  On Member
          p1= -0.60
          p2= -0.60

   4: Distributed Load
          Load Case: blank
          Load Name: Distributed
          Coordinate System: Global Y
          a= 0.00
          b= 1.00  On Member
          p1= -1.30
          p2= -1.30

   5: Distributed Load
          Load Case: DC3  SDL RT
          Load Name: Distributed
          Coordinate System: Global Y
          a= 0.00
          b= 1.00  On Member
```

```
        p1= -0.20
        p2= -0.20

6: Distributed Load
        Load Case: L+I  MOMENT TRUCK ENV
        Load Name: Distributed
        Coordinate System: Global Y
        a= 0.00
        b= 1.00  On Member
        p1= -1.97
        p2= -1.97

7: Distributed Load
        Load Case: L+I  SHEAR TRUCK ENV
        Load Name: Distributed
        Coordinate System: Global Y
        a= 0.00
        b= 1.00  On Member
        p1= -1.02
        p2= -1.02

8: Distributed Load
        Load Case: L+I M&V LANE
        Load Name: Distributed
        Coordinate System: Global Y
        a= 0.00
        b= 1.00  On Member
        p1= -0.76
        p2= -0.76

9: Distributed Load
        Load Case: DC  DEAD LT
        Load Name: Distributed
        Coordinate System: Global Y
        a= 0.00
        b= 1.00  On Member
        p1= -4.10
        p2= -4.10

10: Point Load
        Load Case: L+I  MOMENT TRUCK ENV
        Load Name: Point
        Coordinate System: Global
        a= 0.00  Absolute from Joint I
        Force X= 0.00
        Force Y= 12.10
        Moment M= 0.00

11: Point Load
        Load Case: L+I  SHEAR TRUCK ENV
        Load Name: Point
        Coordinate System: Global
        a= 0.00  Absolute from Joint I
        Force X= 0.00
        Force Y= -94.00
        Moment M= 0.00

12: Point Load
        Load Case: FATIGUE MOMENT ENV
        Load Name: Point
        Coordinate System: Global
        a= 0.00  Absolute from Joint I
        Force X= 0.00
        Force Y= -21.40
        Moment M= 0.00

13: Point Load
        Load Case: FATIGUE MOMENT ENV
        Load Name: Point
        Coordinate System: Global
        a= 0.00  Absolute from Joint I
        Force X= 0.00
        Force Y= 21.40
        Moment M= 0.00

14: Point Load
        Load Case: FATIGUE SHEAR ENV
        Load Name: Point
        Coordinate System: Global
        a= 0.00  Absolute from Joint I
        Force X= 0.00
        Force Y= -75.90
```

```
        Moment M= 0.00

15: Distributed Load
        Load Case: FATIGUE MOMENT ENV
        Load Name: Distributed
        Coordinate System: Global Y
        a= 0.00
        b= 1.00  On Member
        p1= -1.88
        p2= -1.88

16: Distributed Load
        Load Case: FATIGUE SHEAR ENV
        Load Name: Distributed
        Coordinate System: Global Y
        a= 0.00
        b= 1.00  On Member
        p1= -1.02
        p2= -1.02

17: Distributed Load
        Load Case: FATIGUE MOMENT ENV
        Load Name: Distributed
        Coordinate System: Global Y
        a= 0.00
        b= 1.00  On Member
        p1= -1.62
        p2= -1.62

18: Distributed Load
        Load Case: FATIGUE SHEAR ENV
        Load Name: Distributed
        Coordinate System: Global Y
        a= 0.00
        b= 1.00  On Member
        p1= -0.88
        p2= -0.88

19: Point Load
        Load Case: FATIGUE MOMENT ENV
        Load Name: Point
        Coordinate System: Global
        a= 0.00  Absolute from Joint I
        Force X= 0.00
        Force Y= 18.50
        Moment M= 0.00

20: Point Load
        Load Case: FATIGUE SHEAR ENV
        Load Name: Point
        Coordinate System: Global
        a= 0.00  Absolute from Joint I
        Force X= 0.00
        Force Y= -65.60
        Moment M= 0.00

21: Distributed Load
        Load Case: DC1  STEEL WT
        Load Name: Distributed
        Coordinate System: Global Y
        a= 0.00
        b= 1.00  On Member
        p1= -1.10
        p2= -1.10

22: Distributed Load
        Load Case: DC3  SDL LT
        Load Name: Distributed
        Coordinate System: Global Y
        a= 0.00
        b= 1.00  On Member
        p1= -1.05
        p2= -1.05

23: Distributed Load
        Load Case: blank
        Load Name: Distributed
        Coordinate System: Global Y
        a= 0.00
        b= 1.00  On Member
        p1= -1.10
        p2= -1.10
```

```
24: Distributed Load
        Load Case: FATIGUE MOMENT ENV
        Load Name: Distributed
        Coordinate System: Global Y
        a= 0.00
        b= 1.00  On Member
        p1= -1.06
        p2= -1.06

25: Distributed Load
        Load Case: FATIGUE SHEAR ENV
        Load Name: Distributed
        Coordinate System: Global Y
        a= 0.00
        b= 1.00  On Member
        p1= -0.57
        p2= -0.57

26: Point Load
        Load Case: FATIGUE MOMENT ENV
        Load Name: Point
        Coordinate System: Global
        a= 0.00  Absolute from Joint I
        Force X= 0.00
        Force Y= 12.10
        Moment M= 0.00

27: Point Load
        Load Case: FATIGUE SHEAR ENV
        Load Name: Point
        Coordinate System: Global
        a= 0.00  Absolute from Joint I
        Force X= 0.00
        Force Y= -42.80
        Moment M= 0.00

28: Distributed Load
        Load Case: blank
        Load Name: Distributed
        Coordinate System: Global Y
        a= 0.00
        b= 1.00  On Member
        p1= 0.00
        p2= 0.00

29: Distributed Load
        Load Case: blank
        Load Name:
        Coordinate System: Global Y
        a= 0.00
        b= 1.00  On Member
        p1= 0.00
        p2= 0.00

30: Distributed Load
        Load Case: blank
        Load Name: Distributed2
        Coordinate System: Global Y
        a= 0.00
        b= 1.00  On Member
        p1= 0.00
        p2= 0.00

31: Distributed Load
        Load Case: L+I MOMENT 3S2 ENV
        Load Name: Distributed
        Coordinate System: Global Y
        a= 0.00
        b= 1.00  On Member
        p1= -1.73
        p2= -1.73

32: Distributed Load
        Load Case: L+I SHEAR 3S2 ENV
        Load Name: Distributed
        Coordinate System: Global Y
        a= 0.00
        b= 1.00  On Member
        p1= -0.97
        p2= -0.97
```

```
33: Distributed Load
        Load Case: L+I MOMENT 6AXLE ENV
        Load Name: Distributed
        Coordinate System: Global Y
        a= 0.00
        b= 1.00  On Member
        p1= -3.26
        p2= -3.26

34: Distributed Load
        Load Case: L+I SHEAR 6AXLE ENV
        Load Name: Distributed
        Coordinate System: Global Y
        a= 0.00
        b= 1.00  On Member
        p1= -1.77
        p2= -1.77

35: Distributed Load
        Load Case: L+I MOMENT 3AXLE ENV
        Load Name: Distributed
        Coordinate System: Global Y
        a= 0.00
        b= 1.00  On Member
        p1= -1.58
        p2= -1.58

36: Distributed Load
        Load Case: L+I SHEAR 3AXLE ENV
        Load Name: Distributed
        Coordinate System: Global Y
        a= 0.00
        b= 1.00  On Member
        p1= -0.81
        p2= -0.81

37: Distributed Load
        Load Case: L+I MOMENT 4AXLE ENV
        Load Name: Distributed
        Coordinate System: Global Y
        a= 0.00
        b= 1.00  On Member
        p1= -1.79
        p2= -1.79

38: Distributed Load
        Load Case: L+I SHEAR 4AXLE ENV
        Load Name: Distributed
        Coordinate System: Global Y
        a= 0.00
        b= 1.00  On Member
        p1= -0.93
        p2= -0.93

39: Distributed Load
        Load Case: L+I MOMENT 5AXLE ENV
        Load Name: Distributed
        Coordinate System: Global Y
        a= 0.00
        b= 1.00  On Member
        p1= -1.86
        p2= -1.86

40: Distributed Load
        Load Case: L+I SHEAR 5AXLE ENV
        Load Name: Distributed
        Coordinate System: Global Y
        a= 0.00
        b= 1.00  On Member
        p1= -1.02
        p2= -1.02

41: Distributed Load
        Load Case: L+I MOMENT H20 ENV
        Load Name: Distributed
        Coordinate System: Global Y
        a= 0.00
        b= 1.00  On Member
        p1= -1.07
        p2= -1.07

42: Distributed Load
```

```
        Load Case: L+I SHEAR H20 ENV
        Load Name: Distributed
        Coordinate System: Global Y
        a= 0.00
        b= 1.00  On Member
        p1= -0.54
        p2= -0.54

43: Point Load
        Load Case: L+I MOMENT 3S2 ENV
        Load Name: Point
        Coordinate System: Global
        a= 0.00  Absolute from Joint I
        Force X= 0.00
        Force Y= 14.20
        Moment M= 0.00

44: Point Load
        Load Case: L+I SHEAR 3S2 ENV
        Load Name: Point
        Coordinate System: Global
        a= 0.00  Absolute from Joint I
        Force X= 0.00
        Force Y= -72.70
        Moment M= 0.00

45: Point Load
        Load Case: L+I MOMENT 6AXLE ENV
        Load Name: Point
        Coordinate System: Global
        a= 0.00  Absolute from Joint I
        Force X= 0.00
        Force Y= 50.20
        Moment M= 0.00

46: Point Load
        Load Case: L+I SHEAR 6AXLE ENV
        Load Name: Point
        Coordinate System: Global
        a= 0.00  Absolute from Joint I
        Force X= 0.00
        Force Y= -118.00
        Moment M= 0.00

47: Point Load
        Load Case: L+I MOMENT 3AXLE ENV
        Load Name: Point
        Coordinate System: Global
        a= 0.00  Absolute from Joint I
        Force X= 0.00
        Force Y= 5.90
        Moment M= 0.00

48: Point Load
        Load Case: L+I SHEAR 3AXLE ENV
        Load Name: Point
        Coordinate System: Global
        a= 0.00  Absolute from Joint I
        Force X= 0.00
        Force Y= -80.70
        Moment M= 0.00

49: Point Load
        Load Case: L+I MOMENT 4AXLE ENV
        Load Name: Point
        Coordinate System: Global
        a= 0.00  Absolute from Joint I
        Force X= 0.00
        Force Y= 7.20
        Moment M= 0.00

50: Point Load
        Load Case: L+I SHEAR 4AXLE ENV
        Load Name: Point
        Coordinate System: Global
        a= 0.00  Absolute from Joint I
        Force X= 0.00
        Force Y= -89.30
        Moment M= 0.00

51: Point Load
        Load Case: L+I MOMENT 5AXLE ENV
```

```
          Load Name: Point
          Coordinate System: Global
          a= 0.00  Absolute from Joint I
          Force X= 0.00
          Force Y= 11.60
          Moment M= 0.00

   52: Point Load
          Load Case: L+I SHEAR 5AXLE ENV
          Load Name: Point
          Coordinate System: Global
          a= 0.00  Absolute from Joint I
          Force X= 0.00
          Force Y= -83.80
          Moment M= 0.00

   53: Point Load
          Load Case: L+I MOMENT H20 ENV
          Load Name: Point
          Coordinate System: Global
          a= 0.00  Absolute from Joint I
          Force X= 0.00
          Force Y= 3.00
          Moment M= 0.00

   54: Point Load
          Load Case: L+I SHEAR H20 ENV
          Load Name: Point
          Coordinate System: Global
          a= 0.00  Absolute from Joint I
          Force X= 0.00
          Force Y= -56.60
          Moment M= 0.00

Load Applied on Joints
   Joint   Applied Loads
   5:      10, 11, 26, 27, 43, 44, 45, 46, 47, 48, 49, 50, 51, 52, 53, 54


Load Applied on Members
   Member  Applied Loads
   0:      1, 3, 5, 6, 7, 8, 9, 21, 22, 24, 25, 31, 32, 33, 34, 35, 36, 37, 38, 39, 40, 41, 42
   1:      1, 3, 5, 6, 7, 8, 9, 21, 22, 24, 25, 31, 32, 33, 34, 35, 36, 37, 38, 39, 40, 41, 42
   2:      1, 3, 5, 6, 7, 8, 9, 21, 22, 24, 25, 31, 32, 33, 34, 35, 36, 37, 38, 39, 40, 41, 42
   3:      1, 3, 5, 6, 7, 8, 9, 21, 22, 24, 25, 31, 32, 33, 34, 35, 36, 37, 38, 39, 40, 41, 42
   4:      1, 3, 5, 6, 7, 8, 9, 21, 22, 24, 25, 31, 32, 33, 34, 35, 36, 37, 38, 39, 40, 41, 42
   5:      1, 3, 5, 6, 7, 8, 9, 21, 22, 24, 25, 31, 32, 33, 34, 35, 36, 37, 38, 39, 40, 41, 42
   6:      1, 3, 5, 6, 7, 8, 9, 21, 22, 24, 25, 31, 32, 33, 34, 35, 36, 37, 38, 39, 40, 41, 42
   7:      1, 3, 5, 6, 7, 8, 9, 21, 22, 24, 25, 31, 32, 33, 34, 35, 36, 37, 38, 39, 40, 41, 42
   8:      1, 3, 5, 6, 7, 8, 9, 21, 22, 24, 25, 31, 32, 33, 34, 35, 36, 37, 38, 39, 40, 41, 42
   9:      1, 3, 5, 6, 7, 8, 9, 21, 22, 24, 25, 31, 32, 33, 34, 35, 36, 37, 38, 39, 40, 41, 42


Load Cases
   0: DC1  STEEL WT
   1: DC2  DECK
   2: DC3  SDL LT
   3: DW  FWS UTIL
   4: L+I  MOMENT TRUCK ENV
   5: L+I  SHEAR TRUCK ENV
   6: L+I M&V LANE
   7: blank
   8: DC3  SDL RT
   9: DC  DEAD LT
   10: FATIGUE MOMENT ENV
   11: FATIGUE SHEAR ENV
   12: L+I MOMENT 3S2 ENV
   13: L+I SHEAR 3S2 ENV
   14: L+I MOMENT 6AXLE ENV
   15: L+I SHEAR 6AXLE ENV
   16: L+I MOMENT 3AXLE ENV
   17: L+I SHEAR 3AXLE ENV
   18: L+I MOMENT 4AXLE ENV
   19: L+I SHEAR 4AXLE ENV
   20: L+I MOMENT 5AXLE ENV
   21: L+I SHEAR 5AXLE ENV
   22: L+I MOMENT H20 ENV
   23: L+I SHEAR H20 ENV


Load Combinations
   0: SVC I DEAD DEFL LT = 1.00xDC1  STEEL WT + 1.00xDC2  DECK + 1.00xDC3  SDL LT + 1.00xDW  FWS UTIL + 0.00xL+I  MOME
```

```
M&V LANE + 0.00xblank + 0.00xDC3  SDL RT + 0.00xDC  DEAD LT + 0.00xFATIGUE MOMENT ENV + 0.00xFATIGUE SHEAR ENV + 0.00x
MOMENT 6AXLE ENV + 0.00xL+I SHEAR 6AXLE ENV + 0.00xL+I MOMENT 3AXLE ENV + 0.00xL+I SHEAR 3AXLE ENV + 0.00xL+I MOMENT 4
MOMENT 5AXLE ENV + 0.00xL+I SHEAR 5AXLE ENV + 0.00xL+I MOMENT H20 ENV + 0.00xL+I SHEAR H20 ENV
   1: SCV I DEAD DEFL RT = 1.00xDC1  STEEL WT + 1.00xDC2  DECK + 0.00xDC3  SDL LT + 1.00xDW  FWS UTIL + 0.00xL+I  MOME
M&V LANE + 0.00xblank + 1.00xDC3  SDL RT + 0.00xDC  DEAD LT + 0.00xFATIGUE MOMENT ENV + 0.00xFATIGUE SHEAR ENV + 0.00x
MOMENT 6AXLE ENV + 0.00xL+I SHEAR 6AXLE ENV + 0.00xL+I MOMENT 3AXLE ENV + 0.00xL+I SHEAR 3AXLE ENV + 0.00xL+I MOMENT 4
MOMENT 5AXLE ENV + 0.00xL+I SHEAR 5AXLE ENV + 0.00xL+I MOMENT H20 ENV + 0.00xL+I SHEAR H20 ENV
   2: STRI MOMENT = 0.00xDC1  STEEL WT + 0.00xDC2  DECK + 0.00xDC3  SDL LT + 1.50xDW  FWS UTIL + 1.75xL+I  MOMENT TRUC
LANE + 0.00xblank + 0.00xDC3  SDL RT + 1.25xDC  DEAD LT + 0.00xFATIGUE MOMENT ENV + 0.00xFATIGUE SHEAR ENV + 0.00xL+I
MOMENT 6AXLE ENV + 0.00xL+I SHEAR 6AXLE ENV + 0.00xL+I MOMENT 3AXLE ENV + 0.00xL+I SHEAR 3AXLE ENV + 0.00xL+I MOMENT 4
MOMENT 5AXLE ENV + 0.00xL+I SHEAR 5AXLE ENV + 0.00xL+I MOMENT H20 ENV + 0.00xL+I SHEAR H20 ENV
   3: STRI SHEAR = 0.00xDC1  STEEL WT + 0.00xDC2  DECK + 0.00xDC3  SDL LT + 1.50xDW  FWS UTIL + 0.00xL+I  MOMENT TRUCK
LANE + 0.00xblank + 0.00xDC3  SDL RT + 1.25xDC  DEAD LT + 0.00xFATIGUE MOMENT ENV + 0.00xFATIGUE SHEAR ENV + 0.00xL+I
MOMENT 6AXLE ENV + 0.00xL+I SHEAR 6AXLE ENV + 0.00xL+I MOMENT 3AXLE ENV + 0.00xL+I SHEAR 3AXLE ENV + 0.00xL+I MOMENT 4
MOMENT 5AXLE ENV + 0.00xL+I SHEAR 5AXLE ENV + 0.00xL+I MOMENT H20 ENV + 0.00xL+I SHEAR H20 ENV
   4: SVC II MOMENT = 0.00xDC1  STEEL WT + 0.00xDC2  DECK + 0.00xDC3  SDL LT + 1.00xDW  FWS UTIL + 1.30xL+I  MOMENT TR
LANE + 0.00xblank + 0.00xDC3  SDL RT + 1.00xDC  DEAD LT + 0.00xFATIGUE MOMENT ENV + 0.00xFATIGUE SHEAR ENV + 0.00xL+I
MOMENT 6AXLE ENV + 0.00xL+I SHEAR 6AXLE ENV + 0.00xL+I MOMENT 3AXLE ENV + 0.00xL+I SHEAR 3AXLE ENV + 0.00xL+I MOMENT 4
MOMENT 5AXLE ENV + 0.00xL+I SHEAR 5AXLE ENV + 0.00xL+I MOMENT H20 ENV + 0.00xL+I SHEAR H20 ENV
   5: SVCII SHEAR = 0.00xDC1  STEEL WT + 0.00xDC2  DECK + 0.00xDC3  SDL LT + 1.00xDW  FWS UTIL + 0.00xL+I  MOMENT TRUC
LANE + 0.00xblank + 0.00xDC3  SDL RT + 1.00xDC  DEAD LT + 0.00xFATIGUE MOMENT ENV + 0.00xFATIGUE SHEAR ENV + 0.00xL+I
MOMENT 6AXLE ENV + 0.00xL+I SHEAR 6AXLE ENV + 0.00xL+I MOMENT 3AXLE ENV + 0.00xL+I SHEAR 3AXLE ENV + 0.00xL+I MOMENT 4
MOMENT 5AXLE ENV + 0.00xL+I SHEAR 5AXLE ENV + 0.00xL+I MOMENT H20 ENV + 0.00xL+I SHEAR H20 ENV
   6: FATGI MOMENT = 0.00xDC1  STEEL WT + 0.00xDC2  DECK + 0.00xDC3  SDL LT + 0.00xDW  FWS UTIL + 0.00xL+I  MOMENT TRU
LANE + 0.00xblank + 0.00xDC3  SDL RT + 0.00xDC  DEAD LT + 1.50xFATIGUE MOMENT ENV + 0.00xFATIGUE SHEAR ENV + 0.00xL+I
MOMENT 6AXLE ENV + 0.00xL+I SHEAR 6AXLE ENV + 0.00xL+I MOMENT 3AXLE ENV + 0.00xL+I SHEAR 3AXLE ENV + 0.00xL+I MOMENT 4
MOMENT 5AXLE ENV + 0.00xL+I SHEAR 5AXLE ENV + 0.00xL+I MOMENT H20 ENV + 0.00xL+I SHEAR H20 ENV
   7: FATGI SHEAR = 0.00xDC1  STEEL WT + 0.00xDC2  DECK + 0.00xDC3  SDL LT + 0.00xDW  FWS UTIL + 0.00xL+I  MOMENT TRUC
LANE + 0.00xblank + 0.00xDC3  SDL RT + 0.00xDC  DEAD LT + 0.00xFATIGUE MOMENT ENV + 1.50xFATIGUE SHEAR ENV + 0.00xL+I
MOMENT 6AXLE ENV + 0.00xL+I SHEAR 6AXLE ENV + 0.00xL+I MOMENT 3AXLE ENV + 0.00xL+I SHEAR 3AXLE ENV + 0.00xL+I MOMENT 4
MOMENT 5AXLE ENV + 0.00xL+I SHEAR 5AXLE ENV + 0.00xL+I MOMENT H20 ENV + 0.00xL+I SHEAR H20 ENV


Masses


Masses Applied on Joints
   Joint   Applied Masses


==========================================================================
Static Analysis Results
__________________________________________________________________________


__________________________________________________________________________
Load Case: DW  FWS UTIL


Reactions in global CS
     Joint                Rx                Ry                 M
         0          0.000000         33.300000          0.000000
        10          0.000000         33.300000          0.000000


__________________________________________________________________________
Load Case: L+I  MOMENT TRUCK ENV


Reactions in global CS
     Joint                Rx                Ry                 M
         0          0.000000        103.285000          0.000000
        10          0.000000        103.285000          0.000000


__________________________________________________________________________
Load Case: L+I  SHEAR TRUCK ENV


Reactions in global CS
     Joint                Rx                Ry                 M
         0          0.000000        103.610000          0.000000
        10          0.000000        103.610000          0.000000


__________________________________________________________________________
Load Case: L+I M&V LANE


Reactions in global CS
     Joint                Rx                Ry                 M
         0          0.000000         42.180000          0.000000
```

10	0.000000	42.180000	0.000000

Load Case: DC DEAD LT

Reactions in global CS

Joint	Rx	Ry	M
0	0.000000	227.550000	0.000000
10	0.000000	227.550000	0.000000

Load Case: FATIGUE MOMENT ENV

Reactions in global CS

Joint	Rx	Ry	M
0	0.000000	52.780000	0.000000
10	0.000000	52.780000	0.000000

Load Case: FATIGUE SHEAR ENV

Reactions in global CS

Joint	Rx	Ry	M
0	0.000000	53.035000	0.000000
10	0.000000	53.035000	0.000000

Load Combination: STRI MOMENT = 0.00xDC1 STEEL WT + 0.00xDC2 DECK + 0.00xDC3 SDL LT + 1.50xDW FWS UTIL + 1.75xL+I
M&V LANE + 0.00xblank + 0.00xDC3 SDL RT + 1.25xDC DEAD LT + 0.00xFATIGUE MOMENT ENV + 0.00xFATIGUE SHEAR ENV + 0.00
MOMENT 6AXLE ENV + 0.00xL+I SHEAR 6AXLE ENV + 0.00xL+I MOMENT 3AXLE ENV + 0.00xL+I SHEAR 3AXLE ENV + 0.00xL+I MOMENT
MOMENT 5AXLE ENV + 0.00xL+I SHEAR 5AXLE ENV + 0.00xL+I MOMENT H20 ENV + 0.00xL+I SHEAR H20 ENV

Reactions in global CS

Joint	Rx	Ry	M
0	0.000000	588.951250	0.000000
10	0.000000	588.951250	0.000000

Load Combination: STRI SHEAR = 0.00xDC1 STEEL WT + 0.00xDC2 DECK + 0.00xDC3 SDL LT + 1.50xDW FWS UTIL + 0.00xL+I
M&V LANE + 0.00xblank + 0.00xDC3 SDL RT + 1.25xDC DEAD LT + 0.00xFATIGUE MOMENT ENV + 0.00xFATIGUE SHEAR ENV + 0.00
MOMENT 6AXLE ENV + 0.00xL+I SHEAR 6AXLE ENV + 0.00xL+I MOMENT 3AXLE ENV + 0.00xL+I SHEAR 3AXLE ENV + 0.00xL+I MOMENT
MOMENT 5AXLE ENV + 0.00xL+I SHEAR 5AXLE ENV + 0.00xL+I MOMENT H20 ENV + 0.00xL+I SHEAR H20 ENV

Reactions in global CS

Joint	Rx	Ry	M
0	0.000000	589.520000	0.000000
10	0.000000	589.520000	0.000000

Load Combination: SVC II MOMENT = 0.00xDC1 STEEL WT + 0.00xDC2 DECK + 0.00xDC3 SDL LT + 1.00xDW FWS UTIL + 1.30xL
M&V LANE + 0.00xblank + 0.00xDC3 SDL RT + 1.00xDC DEAD LT + 0.00xFATIGUE MOMENT ENV + 0.00xFATIGUE SHEAR ENV + 0.00
MOMENT 6AXLE ENV + 0.00xL+I SHEAR 6AXLE ENV + 0.00xL+I MOMENT 3AXLE ENV + 0.00xL+I SHEAR 3AXLE ENV + 0.00xL+I MOMENT
MOMENT 5AXLE ENV + 0.00xL+I SHEAR 5AXLE ENV + 0.00xL+I MOMENT H20 ENV + 0.00xL+I SHEAR H20 ENV

Reactions in global CS

Joint	Rx	Ry	M
0	0.000000	449.954500	0.000000
10	0.000000	449.954500	0.000000

Load Combination: SVCII SHEAR = 0.00xDC1 STEEL WT + 0.00xDC2 DECK + 0.00xDC3 SDL LT + 1.00xDW FWS UTIL + 0.00xL+I
M&V LANE + 0.00xblank + 0.00xDC3 SDL RT + 1.00xDC DEAD LT + 0.00xFATIGUE MOMENT ENV + 0.00xFATIGUE SHEAR ENV + 0.00
MOMENT 6AXLE ENV + 0.00xL+I SHEAR 6AXLE ENV + 0.00xL+I MOMENT 3AXLE ENV + 0.00xL+I SHEAR 3AXLE ENV + 0.00xL+I MOMENT
MOMENT 5AXLE ENV + 0.00xL+I SHEAR 5AXLE ENV + 0.00xL+I MOMENT H20 ENV + 0.00xL+I SHEAR H20 ENV

Reactions in global CS

Joint	Rx	Ry	M
0	0.000000	450.377000	0.000000

10	0.000000	450.377000	0.000000

Load Combination: FATGI MOMENT = 0.00xDC1 STEEL WT + 0.00xDC2 DECK + 0.00xDC3 SDL LT + 0.00xDW FWS UTIL + 0.00xL+I
M&V LANE + 0.00xblank + 0.00xDC3 SDL RT + 0.00xDC DEAD LT + 1.50xFATIGUE MOMENT ENV + 0.00xFATIGUE SHEAR ENV + 0.00x
MOMENT 6AXLE ENV + 0.00xL+I SHEAR 6AXLE ENV + 0.00xL+I MOMENT 3AXLE ENV + 0.00xL+I SHEAR 3AXLE ENV + 0.00xL+I MOMENT 4
MOMENT 5AXLE ENV + 0.00xL+I SHEAR 5AXLE ENV + 0.00xL+I MOMENT H20 ENV + 0.00xL+I SHEAR H20 ENV

Reactions in global CS

Joint	Rx	Ry	M
0	0.000000	79.170000	0.000000
10	0.000000	79.170000	0.000000

Load Combination: FATGI SHEAR = 0.00xDC1 STEEL WT + 0.00xDC2 DECK + 0.00xDC3 SDL LT + 0.00xDW FWS UTIL + 0.00xL+I
M&V LANE + 0.00xblank + 0.00xDC3 SDL RT + 0.00xDC DEAD LT + 0.00xFATIGUE MOMENT ENV + 1.50xFATIGUE SHEAR ENV + 0.00x
MOMENT 6AXLE ENV + 0.00xL+I SHEAR 6AXLE ENV + 0.00xL+I MOMENT 3AXLE ENV + 0.00xL+I SHEAR 3AXLE ENV + 0.00xL+I MOMENT 4
MOMENT 5AXLE ENV + 0.00xL+I SHEAR 5AXLE ENV + 0.00xL+I MOMENT H20 ENV + 0.00xL+I SHEAR H20 ENV

Reactions in global CS

Joint	Rx	Ry	M
0	0.000000	79.552500	0.000000
10	0.000000	79.552500	0.000000

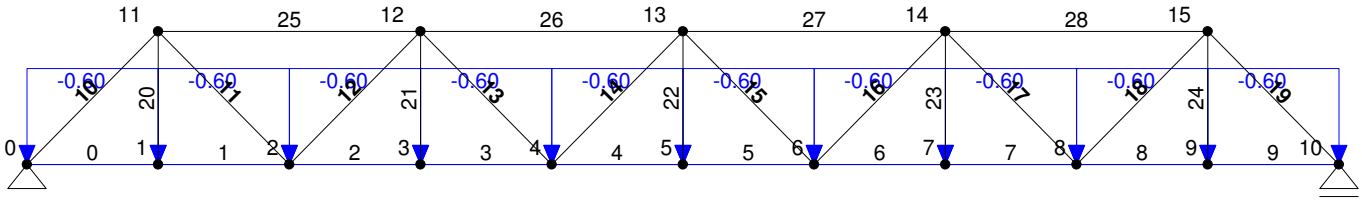
11
25
12
26
13
27
14
28
15
-0.60
-0.60
-0.60
-0.60
-0.60
-0.60
-0.60
-0.60
-0.60
10
20
11
21
12
22
13
23
14
24
15
0
0
1
1
2
2
3
3
4
4
5
5
6
6
7
7
8
8
9
9
10

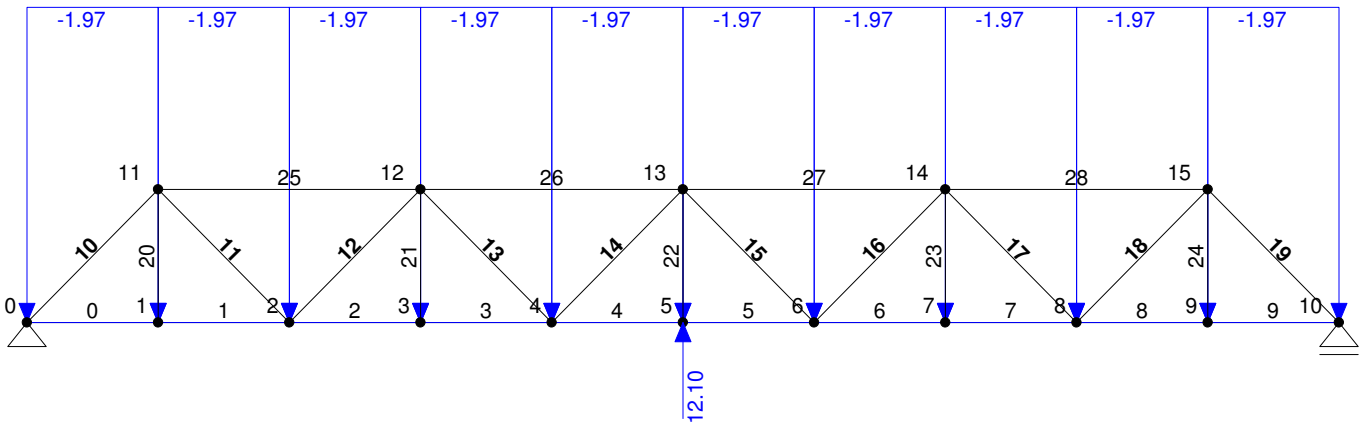
-1.97
-1.97
-1.97
-1.97
-1.97
-1.97
-1.97
-1.97
-1.97
-1.97
11
25
12
26
13
27
14
28
15
10
20
11
12
21
13
14
22
15
16
23
17
18
24
19
0
0
1
1
2
2
3
3
4
4
5
5
6
6
7
7
8
8
9
9
10
12.10

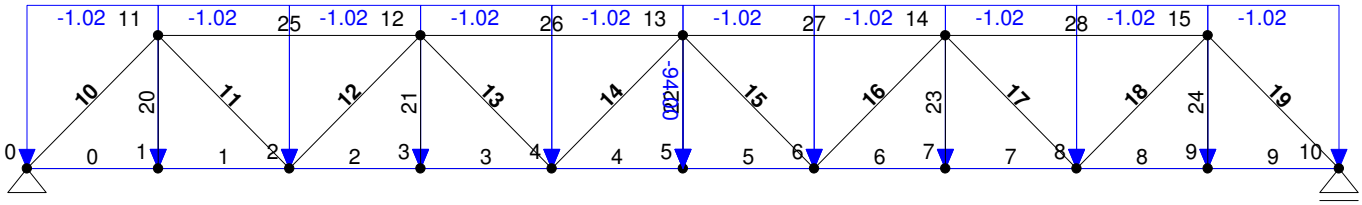
-1.02
11
25
12
26
13
27
14
28
15
10
20
11
12
21
13
14
22
-9.42
15
16
23
17
18
24
19
0
1
2
3
4
5
6
7
8
9
10

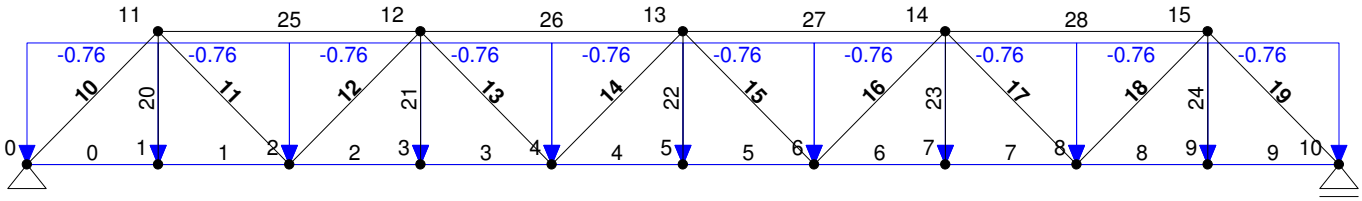
11
25
12
26
13
27
14
28
15
-0.76
10
20
11
12
21
13
14
22
15
16
23
17
18
24
19
0
1
2
3
4
5
6
7
8
9
10

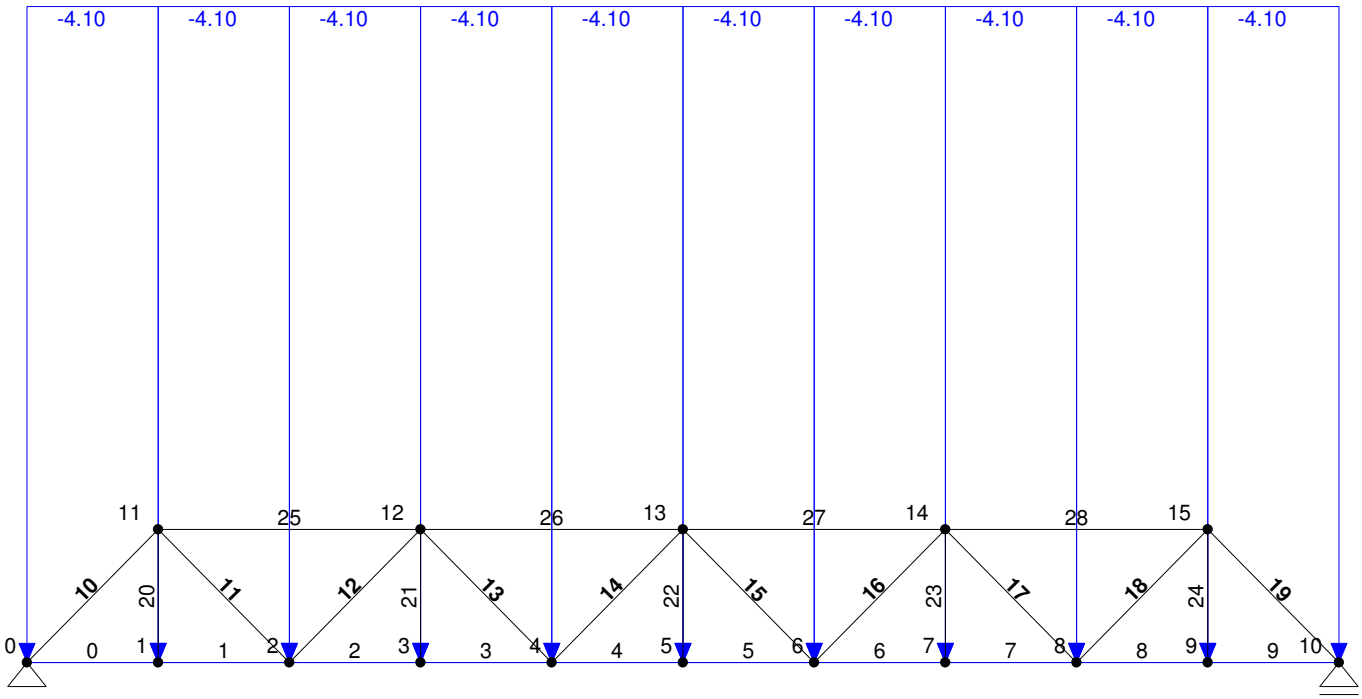
-4.10
-4.10
-4.10
-4.10
-4.10
-4.10
-4.10
-4.10
-4.10
-4.10
11
25
12
26
13
27
14
28
15
10
20
11
12
21
13
14
22
15
16
23
17
18
24
19
0
0
1
1
2
2
3
3
4
4
5
5
6
6
7
7
8
8
9
9
10

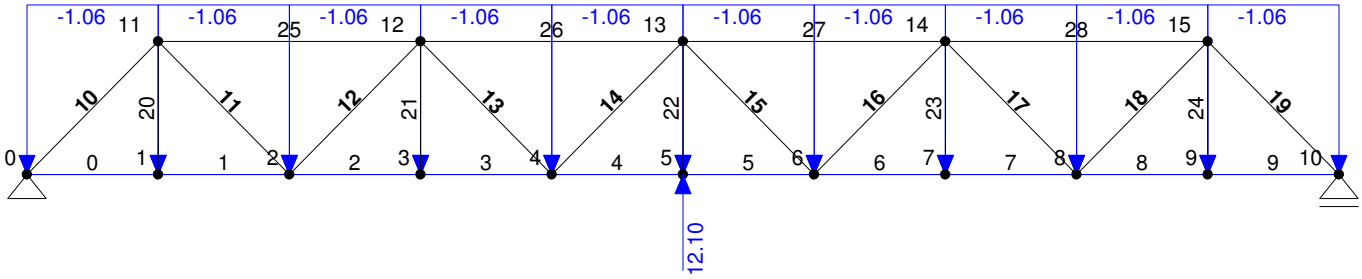
-1.06
11
25
12
26
13
27
14
28
15
10
20
11
12
21
13
14
22
15
16
23
17
18
24
19
0
1
2
3
4
5
6
7
8
9
10
12.10

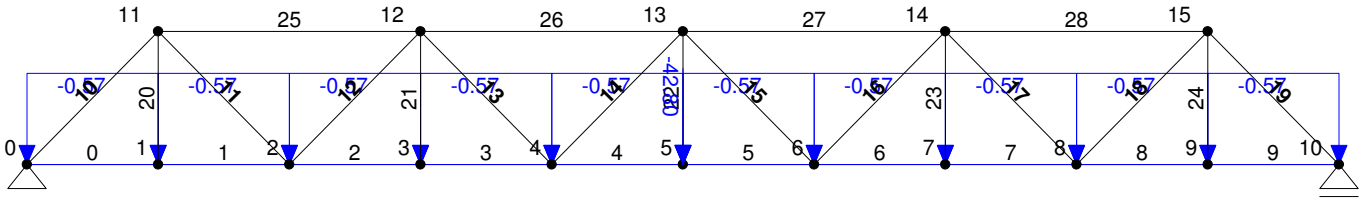
11
25
12
26
13
27
14
28
15
-0.57
-0.57
-0.57

Rutland VT truss span 2, for Member Design Axial Force Diagram, Case: DW FWS UTIL

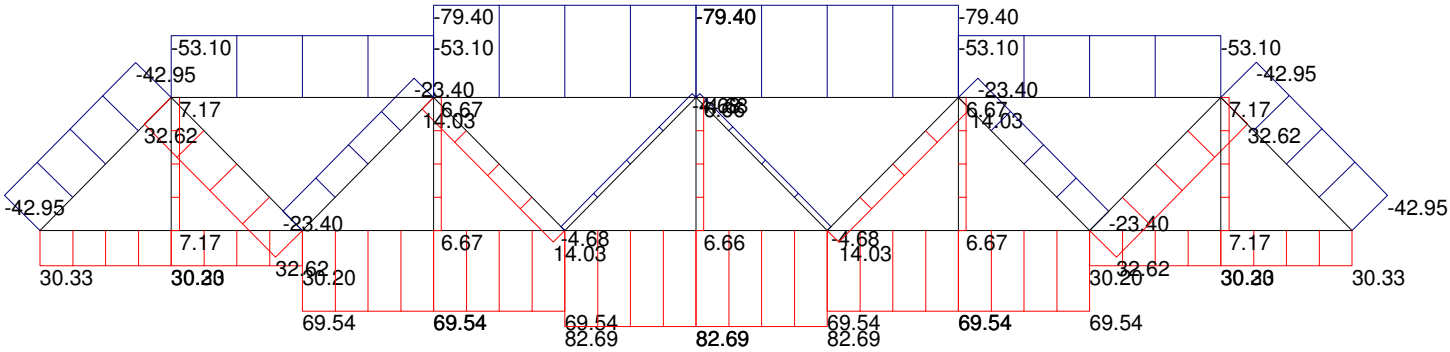

Rutland VT truss span 2, for Member Design Axial Force Diagram, Case: L+I MOMENT TRUCK ENV

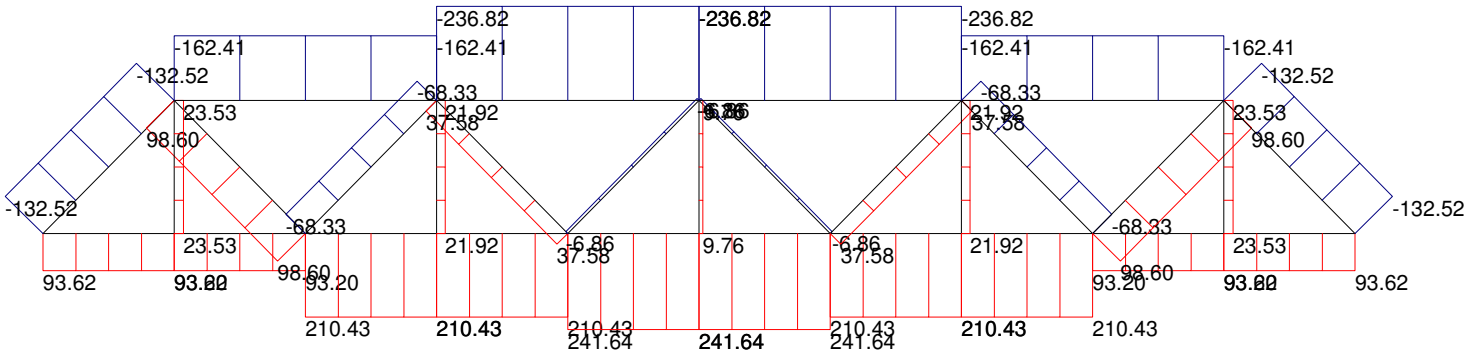

Rutland VT truss span 2, for Member Design

Axial Force Diagram, Case: L+I SHEAR TRUCK ENV

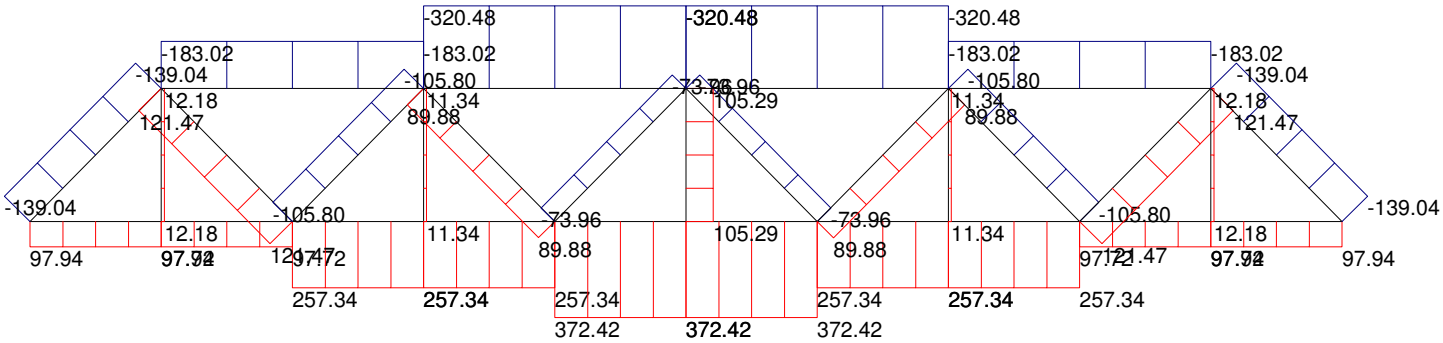

Rutland VT truss span 2, for Member Design Axial Force Diagram, Case: L+I M&V LANE

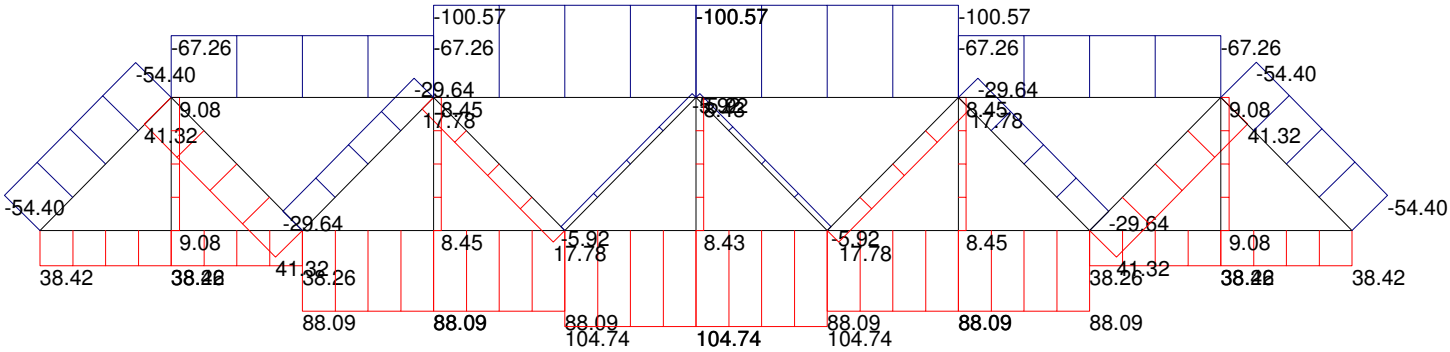

Rutland VT truss span 2, for Member Design Axial Force Diagram, Case: DC DEAD LT

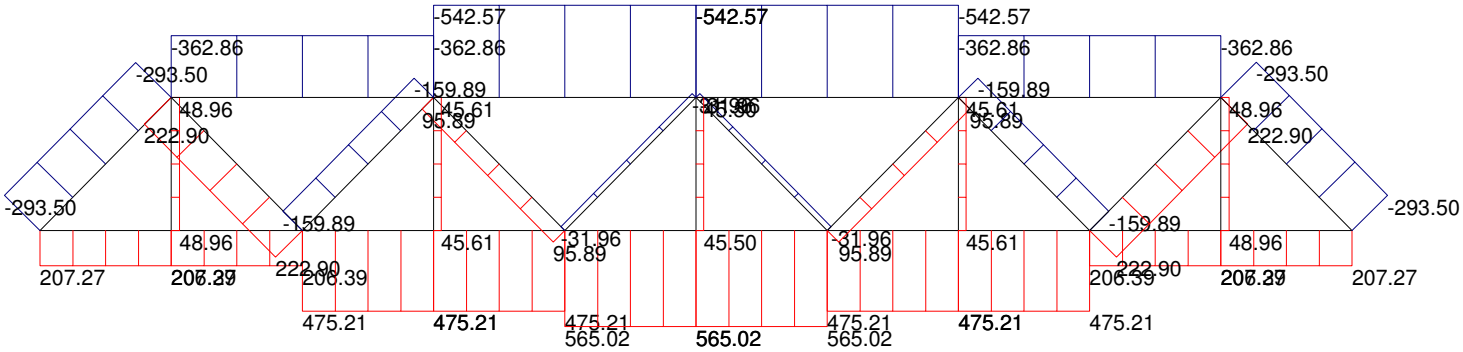

Rutland VT truss span 2, for Member Design Axial Force Diagram, Case: FATIGUE MOMENT ENV

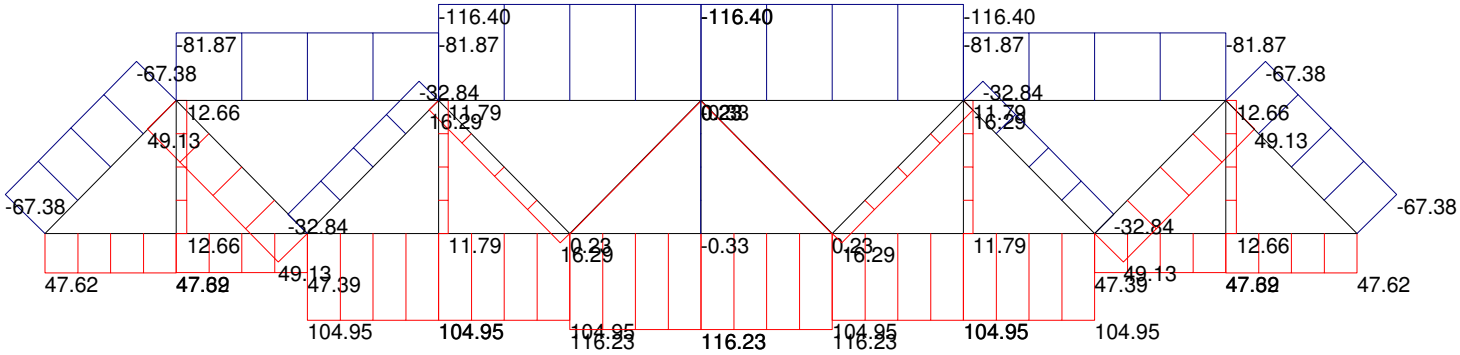

Rutland VT truss span 2, for Member Design Axial Force Diagram, Case: FATIGUE SHEAR ENV

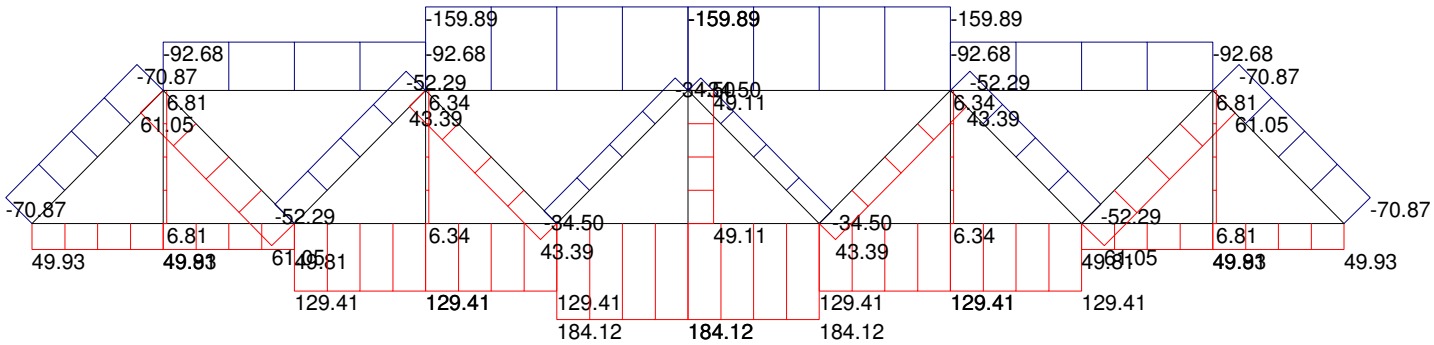

Rutland VT truss span 2, for Member Design Axial Force Diagram, Comb: STRI MOMENT

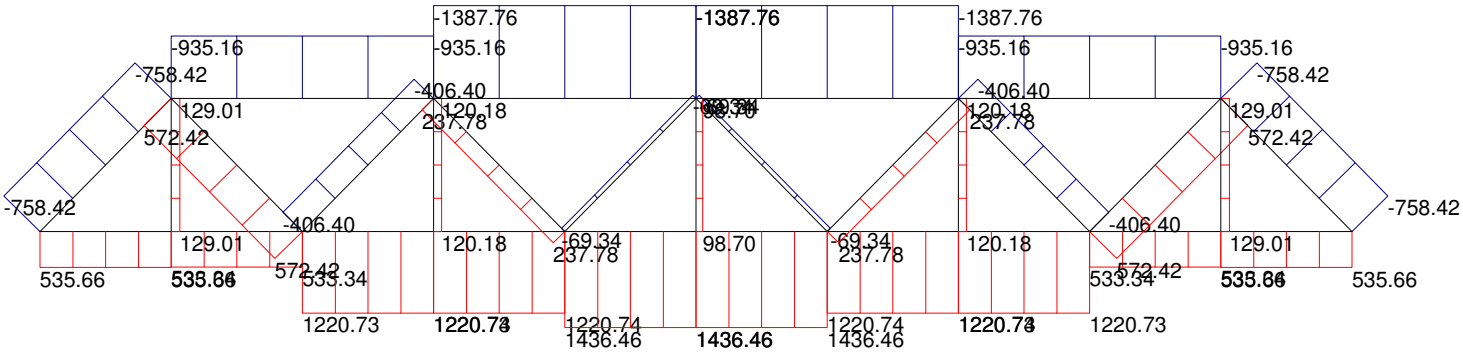

Rutland VT truss span 2, for Member Design Axial Force Diagram, Comb: STRI SHEAR

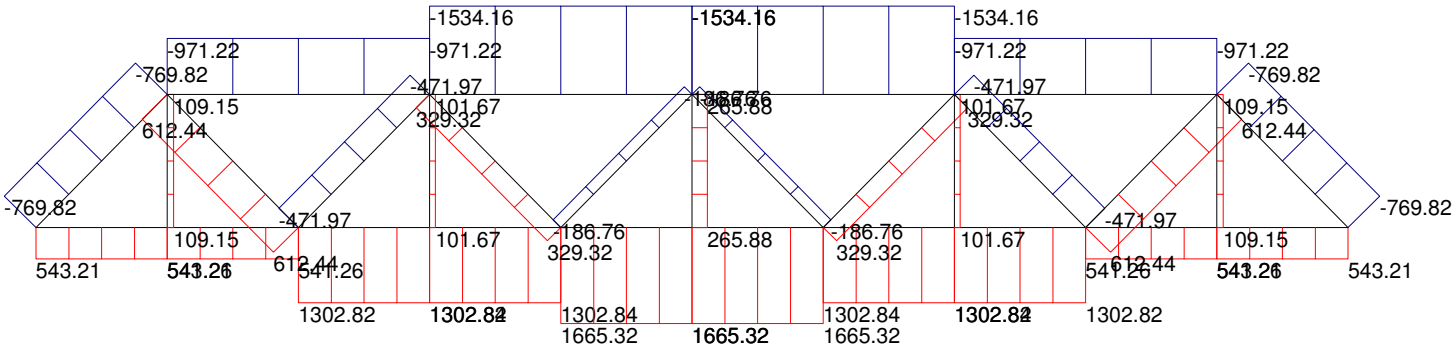

Rutland VT truss span 2, for Member Design Axial Force Diagram, Comb: SVC II MOMENT

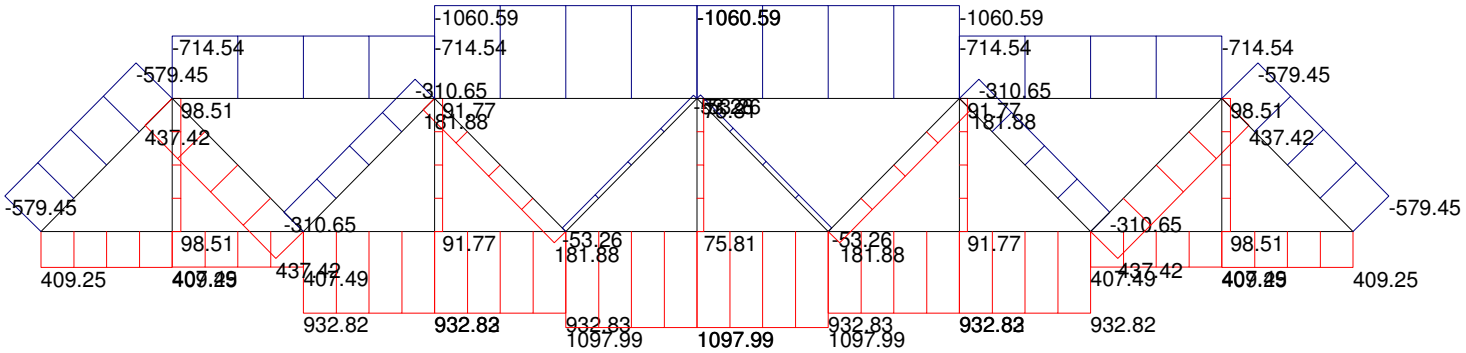

Rutland VT truss span 2, for Member Design

Axial Force Diagram, Comb: SVCII SHEAR

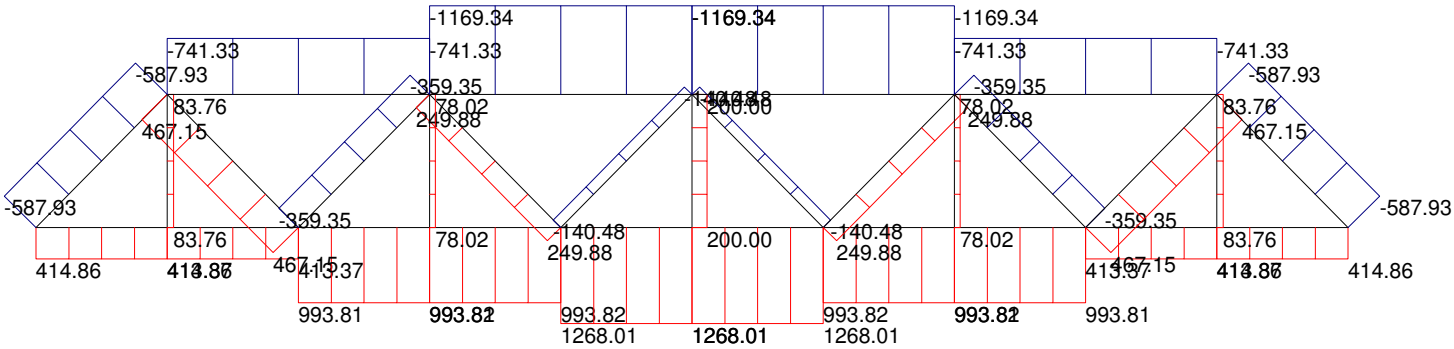

Rutland VT truss span 2, for Member Design Axial Force Diagram, Comb: FATGI MOMENT

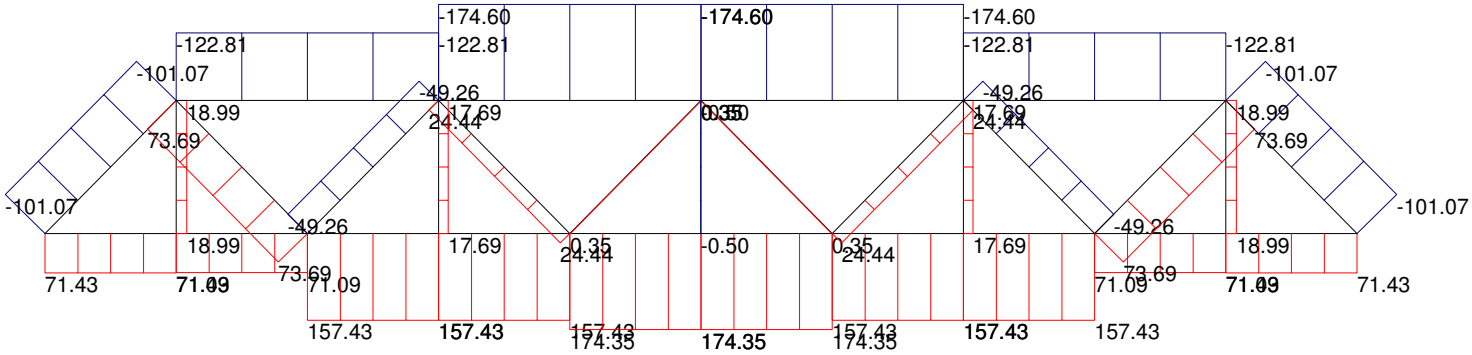

Rutland VT truss span 2, for Member Design Axial Force Diagram, Comb: FATGI SHEAR

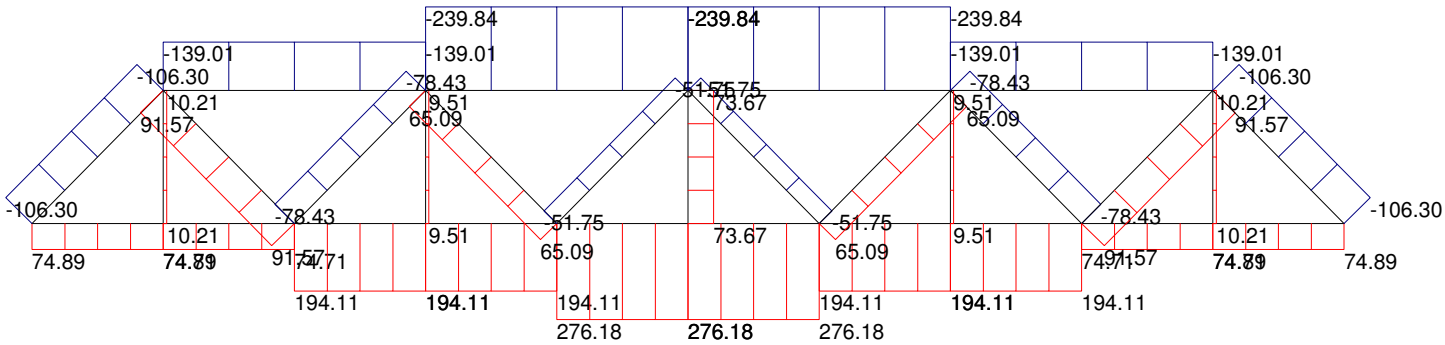

D. TRUSS DESIGN

SUPERSTRUCTURE DESIGN CALCULATIONS FOR BRIDGE #17, RUTLAND, VT

6.5.4.2—Resistance Factors

Resistance factors, ϕ, for the strength limit state shall be taken as follows:

- For flexure $\phi_f = 1.00$
- For shear $\phi_v = 1.00$
- For axial compression, steel only $\phi_c = 0.95$
- For axial compression, composite $\phi_c = 0.90$
- For tension, fracture in net section $\phi_u = 0.80$
- For tension, yielding in gross section $\phi_y = 0.95$
- For bearing on pins in reamed, drilled or bored holes and on milled surfaces $\phi_b = 1.00$
- For bolts bearing on material $\phi_{bb} = 0.80$
- For shear connectors $\phi_{sc} = 0.85$
- For A 325 and A 490 bolts in tension $\phi_t = 0.80$
- For A 307 bolts in tension $\phi_t = 0.80$
- For F 1554 bolts in tension $\phi_t = 0.80$
- For A 307 bolts in shear $\phi_s = 0.75$
- For F 1554 bolts in shear $\phi_s = 0.75$
- For A 325 and A 490 bolts in shear $\phi_s = 0.80$
- For block shear $\phi_{bs} = 0.80$
- For shear, rupture in connection element $\phi_{vn} = 0.80$
- For truss gusset plate compression $\phi_{cg} = 0.75$
- For truss gusset plate chord splices $\phi_{cs} = 0.65$
- For truss gusset plate shear yielding $\phi_{yv} = 0.80$
- For web crippling $\phi_w = 0.80$
- For weld metal in complete penetration welds:
  - shear on effective area $\phi_{e1} = 0.85$
  - tension or compression normal to effective area same as base metal
  - tension or compression parallel to axis of the weldsame as base metal
- For weld metal in partial penetration welds:
  - shear parallel to axis of weld $\phi_{e2} = 0.80$
  - tension or compression parallel to axis of weldsame as base metal
  - compression normal to the effective areasame as base metal
  - tension normal to the effective area $\phi_{e1} = 0.80$
- For weld metal in fillet welds:
  - tension or compression parallel to axis of the weldsame as base metal
  - shear in throat of weld metal $\phi_{e2} = 0.80$
- For resistance during pile driving $\phi = 1.00$

C6.5.4.2

Base metal ϕ as appropriate for resistance under consideration.

The resistance factors for truss gusset plates were developed and calibrated to a target reliability index of 4.5 for the Strength I load combination at a dead-to-live ratio, DL/LL, of 6.0. More liberal ϕ factors could be justified at a DL/LL less than 6.0.

Table 6.4.1-1—Minimum Mechanical Properties of Structural Steel by Shape, Strength, and Thickness

AASHTO Designation	M 270M/ M 270 Grade 36	M 270M/ M 270 Grade 50	M 270M/ M 270 Grade 50S	M 270M/ M 270 Grade 50W	M 270M/ M 270 Grade HPS 50W	M 270M/ M 270 Grade HPS 70W	M 270M/ M 270 Grade HPS 100W	
Equivalent ASTM Designation	A709/ A709M Grade 36	A709/ A709M Grade 50	A709/ A709M Grade 50S	A709/ A709M Grade 50W	A709/ A709M Grade HPS 50W	A709/ A709M Grade HPS 70W	A709/ A709M Grade HPS 100W	
Thickness of Plates, in.	Up to 4.0 incl.	Up to 4.0 incl.	Not Applicable	Up to 4.0 incl.	Up to 4.0 incl.	Up to 4.0 incl.	Up to 2.5 incl.	Over 2.5 to 4.0 incl.
Shapes	All Groups	All Groups	All Groups	All Groups	Not Applicable	Not Applicable	Not Applicable	Not Applicable
Minimum Tensile Strength, F_u, ksi	58	65	65	70	70	85	110	100
Specified Minimum Yield Point or Specified Minimum Yield Strength, F_y, ksi	36	50	50	50	50	70	100	90

BRIDGE #17 RUTLAND CITY
ROUTE TH 10 (RIPLEY ROAD) OVER OTTER CREEK
Rutland, Vermont

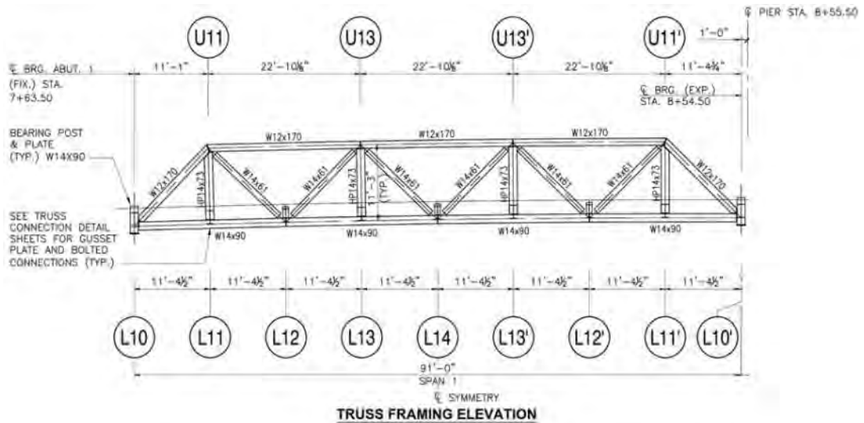

TRUSS FRAMING ELEVATION

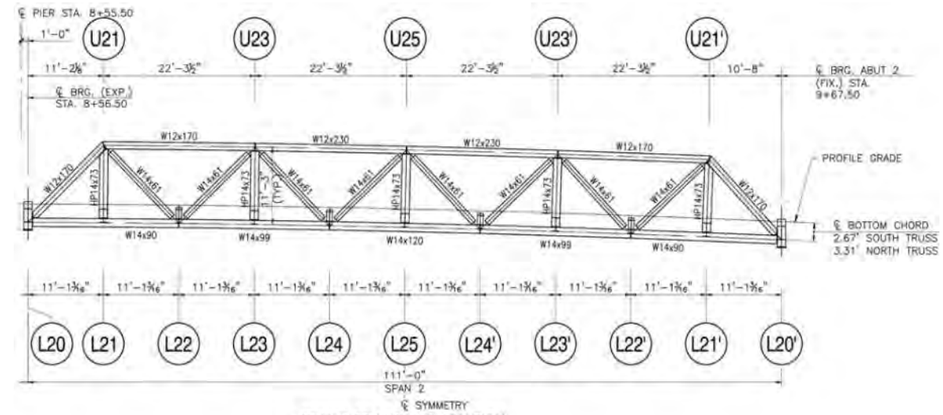

TRUSS FRAMING ELEVATION

MEMBER DESIGN CHECKS AND BOLTS REQUIRED:

Fy, ksi	50.00
Fu, ksi	65.00

		span	1	1	1	1	1	1	1	1	1
		member	brg post	end post diag	top chord 1	top chord 2	diagonal	diagonal	vertical	bot chord 1	bot chord 2
		MEMBER	L10	L10-U11	U11-U13	U13-U13'	L12-U13	U11-L12	L13-U13	L10-L12	L12-L14
		size	W14x90	W12x170	W12x170	W12x170	W14x61	W14x61	HP14x73	W14x90	W14x90
		force, compr tension	C	C	C	C	C	T	T	T	T
		L	4.00	15.99	22.74	22.74	15.99	15.99	11.25	11.37	11.37
		r in plane	3.70	3.22	3.22	3.22	2.45	2.45	3.49	3.70	3.70
		r out plane	6.14	6.14	6.14	6.14	5.97	5.98	5.98	5.84	5.84
		k in plane	1.20	1.20	1.20	1.20	1.20	1.20	1.20	1.20	1.20
		k out plane	2.00	2.00	1.00	1.00	1.20	1.20	2.00	1.20	1.20
		kL/r max	15.6	71.5	101.7	101.7	94.0	94.0	46.4	44.3	44.3
		Ag	26.50	50.00	50.00	50.00	17.90	17.90	21.40	26.50	26.50
		Ag ft2	0.184	0.347	0.347	0.347	0.124	0.124	0.149	0.184	0.184
		bf	14.50	12.60	12.60	12.60	10.00	10.00	14.60	14.50	14.50
		tf	0.71	1.56	1.56	1.56	0.65	0.65	0.51	0.71	0.71
		d	14.00	14.00	14.00	14.00	13.90	13.90	13.60	14.00	14.00
		tw	0.440	0.960	0.960	0.960	0.375	0.375	0.505	0.440	0.440
		bolt holes	8	8	8	8	4	4	8	8	8
		k1	1.44	1.31	1.31	1.31	1.00	1.00	0.88	1.44	1.44
		C3	0.88	0.88	0.88	0.88	0.88	0.88	0.88	0.88	0.88
		k1+C3	2.31	2.19	2.19	2.19	1.88	1.88	1.75	2.31	2.31
		An	21.18	38.30	38.30	38.30	15.48	15.48	17.61	21.18	21.18
		phi y	0.95	0.95	0.95	0.95	0.95	0.95	0.95	0.95	0.95
		phi u	0.80	0.80	0.80	0.80	0.80	0.80	0.80	0.80	0.80
		hole dia	0.94	0.94	0.94	0.94	0.94	0.94	0.94	0.94	0.94
		U	0.90	0.90	0.90	0.90	0.90	0.90	0.90	0.90	0.90
	Tension strength:										
	6.8.2.1-1	phiy Fy	1258.8	2375.0	2375.0	2375.0	850.3	850.3	1016.5	1258.8	1258.8
	6.8.2.1-2	phiu Fu	991.0	1792.4	1792.4	1792.4	724.5	724.5	824.3	991.0	991.0
	Compression strength:										
	6.9.4.1.1	phic*Pn/Ag	46.7	32.7	22.3	22.3	24.9	24.9	40.6	41.1	41.1
		phic*Pn	-1237.3	-1634.8	-1115.8	-1115.8	-446.0	-446.0	-867.8	-1090.2	-1090.2
	STRI, axial	**load demand/resist**	**0.40**	**0.40**	**0.67**	**0.88**	**0.75**	**0.66**	**0.20**	**0.45**	**0.94**
	computed	STRI force	-495.0	-647.0	-753.0	-984.0	-334.0	479.0	167.0	450.0	933.0
	computed	SVCII force	-377.0	-492.0	-574.0	-750.0	-253.0	364.0	126.0	343.0	711.0
	computed	FATGI force						83.0	43.1	68.0	133.0
6.13.1	conn design	STRI force	-928.0	-1226.1	-934.4	-1049.9	-390.0	601.8	618.2	743.2	962.0
6.13.2.7 shear k/bolt	27.70	#bolts STR	34	45	34	38	15	22	23	27	35
6.13.2.8 shear k/bolt	12.90	#bolts SVC	30	39	45	59	20	29	10	27	56
STRI	BOLTS strength	phi*Rn	-941.8	-1246.5	-1246.5	-1634.3	-554.0	803.3	637.1	747.9	1551.2
SVCII	BOLTS strength	phi*Rn	-438.6	-580.5	-580.5	-761.1	-258.0	374.1	296.7	348.3	722.4
6.6.1.2.5 FATGI	on net section	stress<16ksi						5.4	2.4	3.2	6.3

	span	2	2	2	2	2	2	2	2	2	2	2	2
	member	brg post	end post diag	top chord 1	top chord 2	diagonal	diagonal	vertical	bot chord 1	bot chord 2	bot chord 3	bot chord 2	bot chord 3
	MEMBER	L20	L20-U21	U21-U23	U23-U25	L22-U23	U21-L22	L23-U23	L20-L22	L22-L24	L24-L24'	L22-L24	L24-L24'
	size	W14x90	W12x170	W12x170	W12x230	W14x61	W14x61	HP14x73	W14x90	W14x99	W14x120	W14x99	W14x120
	force, compr tension	C	C	C	C	C	T	T	T	T	T	T	T
	L	4.00	15.80	22.20	22.20	15.80	15.80	11.25	11.10	11.10	11.10	11.10	11.10
	r in plane	3.70	3.22	3.22	3.31	2.45	2.45	3.49	3.70	3.71	3.74	3.71	3.74
	r out plane	6.14	6.14	5.74	5.97	5.98	5.98	5.84	6.14	6.17	6.24	6.17	6.24
	k in plane	1.00	1.00	1.00	1.00	1.00	1.00	1.00	1.00	1.00	1.00	1.00	1.00
	k out plane	2.00	2.00	1.00	1.31	1.20	1.20	2.00	1.20	1.40	1.40	1.40	1.40
	kL/r max	15.6	61.8	82.7	80.5	77.4	77.4	46.2	36.0	35.9	35.6	35.9	35.6
	Ag	26.5	50.0	50.0	67.7	17.9	17.9	21.4	26.5	29.1	35.3	29.1	35.3
	Ag ft2	0.184	0.347	0.347	0.470	0.124	0.124	0.149	0.184	0.202	0.245	0.202	0.245
	bf	14.50	12.60	12.60	12.90	10.00	10.00	14.60	14.50	14.56	14.67	14.56	14.67
	tf	0.71	1.56	1.56	2.07	0.65	0.65	0.51	0.71	0.78	0.94	0.78	0.94
	d	14.00	14.00	14.00	15.10	13.90	13.90	13.60	14.00	14.16	14.48	14.16	14.48
	tw	0.440	0.960	0.960	1.290	0.375	0.375	0.505	0.440	0.485	0.590	0.485	0.590
	bolt holes	8	8	8	8	4	4	8	8	4	4	8	8
	k1	1.44	1.31	1.31	1.50	1.00	1.00	0.88	1.44	1.50	1.50	1.50	1.50
	C3	0.88	0.88	0.88	0.88	0.88	0.88	0.88	0.88	0.88	0.88	0.88	0.88
	k1+C3	2.31	2.19	2.19	2.38	1.88	1.88	1.75	2.31	2.38	2.38	2.38	2.38
	An	21.2	38.3	38.3	52.2	15.5	15.5	17.6	21.2	26.2	31.8	23.3	28.3
	phi y	0.95	0.95	0.95	0.95	0.95	0.95	0.95	0.95	0.95	0.95	0.95	0.95
	phi u	0.80	0.80	0.80	0.80	0.80	0.80	0.80	0.80	0.80	0.80	0.80	0.80
	hole dia	0.94	0.94	0.94	0.94	0.94	0.94	0.94	0.94	0.94	0.94	0.94	0.94
	U	0.90	0.90	0.90	0.90	0.90	0.90	0.90	0.95	0.95	0.95	0.95	0.95
	Tension strength:												
	6.8.2.1-1	phiy Fy	1258.8	2375.0	2375.0	3215.8	850.3	850.3	1016.5	1258.8	1382.3	1676.8	1382.3	1676.8
	6.8.2.1-2	phiu Fu	991.0	1792.4	1792.4	2441.8	724.5	724.5	824.3	1046.0	1293.0	1569.7	1148.6	1395.6
	Compression strength:												
	6.9.4.1.1	phic*Pn/Ag	46.7	35.9	28.8	29.6	30.7	30.7	40.6	43.2	43.2	43.3	43.2	43.3
		phic*Pn	-1237.3	-1796.7	-1441.5	-2004.8	-549.2	-549.2	-868.9	-1144.5	-1257.4	-1527.6	-1257.4	-1527.6
	STRI, axial	**load demand/resist**	**0.48**	**0.43**	**0.65**	**0.69**	**0.86**	**0.85**	**0.20**	**0.51**	**0.94**	**0.92**	**0.97**	**0.95**
	computed	STRI force	-590.0	-770.0	-935.0	-1388.0	-472.0	613.0	167.0	536.0	1221.0	1437.0	1110.2	1326.2
	computed	SVCII force	-451.0	-588.0	-715.0	-1061.0	-359.0	467.0	127.0	409.0	933.0	1098.0	906.0	1072.0
	computed	FATGI force						92.0	43.1	72.0	158.0	175.0		
6.13.1	conn design	STRI force	-928.0	-1347.5	-1188.3	-1696.4	-510.6	668.8	618.2	791.0	1257.0	1503.3	1129.4	1360.9
6.13.2.7 shear k/bolt	27.70	#bolts STR	34	49	43	62	19	25	23	29	46	55	41	50
6.13.2.8 shear k/bolt	12.90	#bolts SVC	35	46	56	83	28	36	10	32	73	85	71	84
STRI	BOLTS strength	phi*Rn	-969.5	-1357.3	-1551.2	-2299.1	-775.6	997.2	637.1	886.4	2022.1	2354.5	1966.7	2326.8
SVCII	BOLTS strength	phi*Rn	-451.5	-632.1	-722.4	-1070.7	-361.2	464.4	296.7	412.8	941.7	1096.5	915.9	1083.6
6.6.1.2.5 FATGI	on net section	stress<16ksi						5.9	2.4	3.4	6.0	5.5		

FST

PROJECT

PROJECT NUMBER

SUBJECT RUTLAND VT TRUSS

SHEET NUMBER

DATE 5-15

COMPUTED BY TD

CHECKED BY MAB

TRUSS DISTRIBUTION FACTORS FOR LL+IM

DESIGN 2-LANES

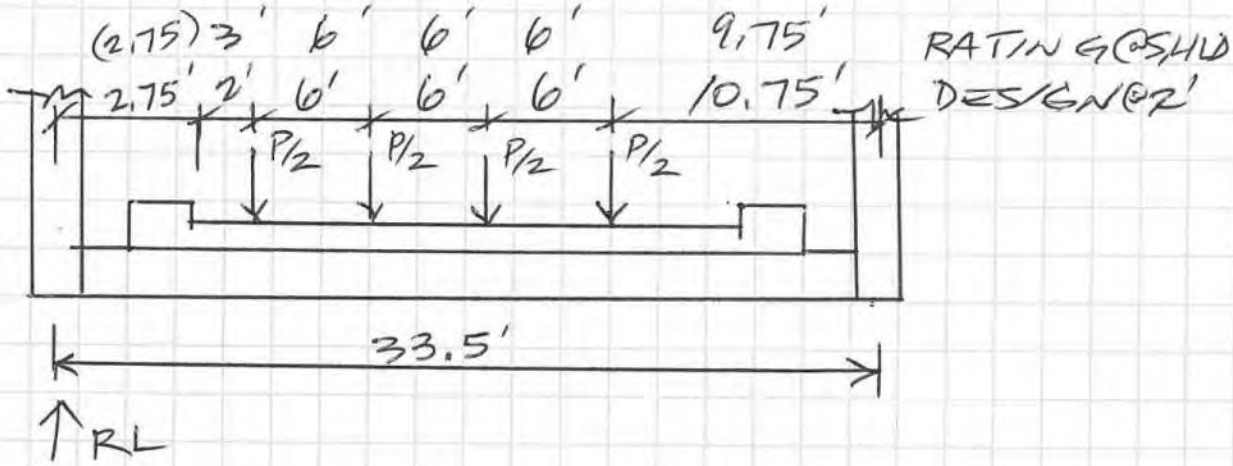

$$RL = P/2\,(10.75 + 16.75 + 22.75 + 28.75)\,/\,33.5$$

$$= 1.18\,P \text{ DESIGN D.F.}$$

FOR RATING, 1ST WHEEL @ STRIPE

$$RL = \frac{P}{2}(9.75 + 15.75 + 21.75 + 27.75)\,/\,33.5$$

$$= 1.12\,P \text{ RATING D.F.}$$

FATIGUE 1-LANE

$$RL = P/2\,(18.75 + 22.75)\,/\,33.5$$

$$= 0.770\,P \text{ FATIGUE D.F.}$$

BRIDGE #17 RUTLAND CITY
ROUTE TH 10 (RIPLEY ROAD) OVER OTTER CREEK
Rutland, Vermont

Bolted Connection Design Values

6.13.2 bolts

input			output		
	in				
dia	0.875		area	0.60	sq in
spec	A325				
Fub	120				
threads in	0.38				
threads out	0.48				

6.13.2.7 shear STRENGTH
Rr=phi Rn=phi (0.48 or 0.38) AbFuNs (after slip has occurred)
Rr=phi Rn

phi s	0.8		phi Rn shear STR thread-in	21.9 k
Ns	1		phi Rn shear STR thread-out	27.7 k

6.13.2.2 SERVICE II (1.3*LL+I)
6.13.2.8 Rn=KhKsNsPt phi Rn (prior to slip) 12.9 k

Kh	1	std hole		
Ks	0.33	0.5=Cl B; 0.33=Cl C	0.59	STR1/SVC2 thread in
Ns	1	planes	0.46	STR1/SVC2 thread out
Pt	39	39 for 7/8, 51 for 1"		
phi	1	svc		

6.13.2.9 bearing

phi Rn=phibb*2.4*d*t*Fu min t 0.25

Fu plate	65	ksi
phibb	0.8	
d	0.875	in
phi Rn shear STR thread-out	27.7	k

6.13.2.10 tensile STR
Rr=phi Rn=phi 0.76 AbFu phi Rn tension STR 43.9 k
Rr=phi Rn
phi t 0.8

FST

PROJECT

SUBJECT

PROJECT NUMBER
SHEET NUMBER
DATE
COMPUTED BY TD
CHECKED BY MAB

6,14,2,9
300#/, STRI PERM

U-FRAME CONNECTION

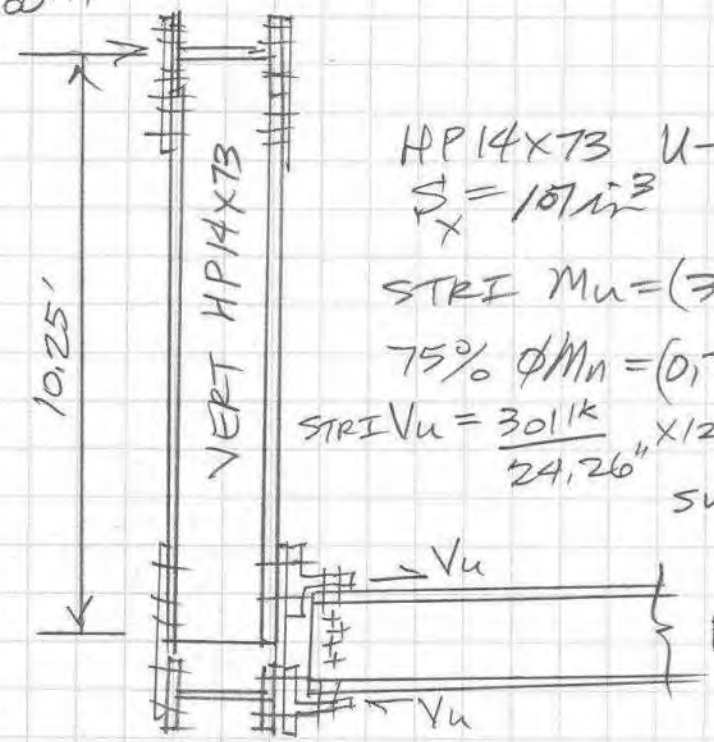

HP14x73 U-FRAME BENDING
$S_x = 107 in^3$

STRI $M_u = (300^{\#}/' \; 11.4' \times 10.25')/1.25 = 44^k$

75% $\phi M_n = (0.75)\, 0.9(50)\, 107/12 = 301^{'k}$

STRI $V_u = \frac{301^{'k}}{24.26''} \times 12 = 149^k \div 27.7 = 5.4$ BOLTS

SVCII BOLTS
$= \frac{44^k}{24.26} \times 12 \div 12.2 = 1$ BOLT

FB W24x117
$t_w = 0.55''$
$d = 24.26''$

CONNECTION WEB: 75% $[\phi V_n = 0.9(0.58)50(0.55)24.26]$
$= 348^k \times 0.75$
$= 261^k$

BOLT STRI $\phi R_n = 27.7^k$

NEED $261/27.7 = 9.4$ BOLTS

USE 2 PLANES @ 5 BOLTS
$= 10$ BOLT PLANES

USE 8 BOLTS IN WT9x35.5 TOP & BOT, USE 5 BOLTS IN W24 WEB

WT STEM STRESS STRI $= \frac{301^{'k}}{24.26''} \times 12 / (1/2'' \times 12'')$
$= 24.8$ ksi $< \phi R_n = 45$ ksi
OK

6.14.2—Trusses

Compression Members

6.14.2.10—Factored Resistance

The factored resistance of tension members shall satisfy the requirements specified in Article 6.8.2.

The factored resistance of compression members shall satisfy the requirements specified in Article 6.9.2.

The nominal bending resistance of the members whose factored resistance is governed by interaction equations, specified in Articles 6.8.2.3 or 6.9.2.2, shall be evaluated as specified in Article 6.12.

6.9.2—Compressive Resistance

6.9.2.1—Axial Compression

The factored resistance of components in compression, P_r, shall be taken as:

$$P_r = \phi_c P_n \qquad (6.9.2.1\text{-}1)$$

where:

P_n = nominal compressive resistance as specified in Articles 6.9.4 or 6.9.5, as applicable (kip)

ϕ_c = resistance factor for compression as specified in Article 6.5.4.2

6.9.2.2—Combined Axial Compression and Flexure

Except as permitted otherwise in Article 6.9.4.4, the axial compressive load, P_u, and concurrent moments, M_{ux} and M_{uy}, calculated for the factored loadings by elastic analytical procedures shall satisfy the following relationship:

- If $\frac{P_u}{P_r} < 0.2$, then

$$\frac{P_u}{2.0P_r} + \left(\frac{M_{ux}}{M_{rx}} + \frac{M_{uy}}{M_{ry}}\right) \le 1.0 \qquad (6.9.2.2\text{-}1)$$

- If $\frac{P_u}{P_r} \ge 0.2$, then

$$\frac{P_u}{P_r} + \frac{8.0}{9.0}\left(\frac{M_{ux}}{M_{rx}} + \frac{M_{uy}}{M_{ry}}\right) \le 1.0 \qquad (6.9.2.2\text{-}2)$$

6.14.2.9—Half Through-Trusses

The vertical truss members and the floorbeams and their connections in half through-truss spans shall be proportioned to resist a lateral force of not less than 0.30 klf applied at the top chord panel points of each truss, considered as a permanent load for the Strength I Load Combination and factored accordingly.

The top chord shall be considered as a column with elastic lateral supports at the panel points.

6.9.4.1—Nominal Compressive Resistance

6.9.4.1.1—General

P_n shall be determined as follows:

- If $\frac{P_e}{P_o} \ge 0.44$, then:

$$P_n = \left[0.658^{\left(\frac{P_o}{P_e}\right)}\right] P_o \qquad (6.9.4.1.1\text{-}1)$$

- If $\frac{P_e}{P_o} < 0.44$, then:

$$P_n = 0.877 P_e \qquad (6.9.4.1.1\text{-}2)$$

where:

A_g = gross cross-sectional area of the member (in.^{2})

F_y = specified minimum yield strength (ksi)

P_e = elastic critical buckling resistance determined as specified in Article 6.9.4.1.2 for flexural buckling, and as specified in Article 6.9.4.1.3 for torsional bucking or flexural-torsional buckling, as applicable (kips)

P_o = equivalent nominal yield resistance = QF_yA_g (kips)

Q = slender element reduction factor determined as specified in Article 6.9.4.2. Q shall be taken equal to 1.0 for bearing stiffeners.

6.9.4.1.2—Elastic Flexural Buckling Resistance

The elastic critical buckling resistance, P_e, based on flexural buckling shall be taken as:

4.6.2.4—Truss and Arch Bridges

The lever rule may be used for the distribution of gravity loads in trusses and arches when analyzed as planar structures. If a space analysis is used, either the lever rule or direct loading through the deck or deck system may be used.

Where loads, other than the self-weight of the members and wind loads there on, are transmitted to the truss at the panel points, the truss may be analyzed as a pin-connected assembly.

C6.9.4.1.3

Torsional buckling of concentrically loaded compression members refers to a buckling mode in which the member twists about its shear center. Torsional buckling applies only for open-section doubly symmetric compression members for which the locations of the centroid and shear center coincide. Torsional buckling will rarely control and need not be considered for doubly symmetric I-section members satisfying the cross-section proportion limits specified in Article 6.10.2, unless the effective length for torsional buckling is significantly larger than the effective length for y-axis flexural buckling.

where:

P_r = factored compressive resistance as specified in Article 6.9.2.1 (kip)

M_{rx} = factored flexural resistance about the x-axis taken equal to ϕ_f times the nominal flexural resistance about the x-axis determined as specified in Article 6.10, 6.11 or 6.12, as applicable (kip-in.)

M_{ry} = factored flexural resistance about the y-axis taken equal to ϕ_f times the nominal flexural resistance about the y-axis determined as specified in Article 6.12, as applicable (kip-in.)

M_{ux} = factored flexural moment about the x-axis calculated as specified below (kip-in.)

M_{uy} = factored flexural moment about the y-axis calculated as specified below (kip-in.)

ϕ_f = resistance factor for flexure specified in Article 6.5.4.2

M_{ux} and M_{uy}, moments about axes of symmetry, may be determined by:

- A second-order elastic analysis that accounts for the magnification of moment caused by the factored axial load, or
- The approximate single step adjustment specified in Article 4.5.3.2.2b.

4.5.3.2.2b—Moment Magnification—Beam Columns

The factored moments or stresses may be increased to reflect effects of deformations as follows:

$$M_c = \delta_b M_{2b} + \delta_s M_{2s} \qquad (4.5.3.2.2b\text{-}1)$$

$$f_c = \delta_b f_{2b} + \delta_s f_{2s} \qquad (4.5.3.2.2b\text{-}2)$$

in which:

$$\delta_b = \frac{C_m}{1 - \frac{P_u}{\phi_K P_e}} \geq 1.0 \qquad (4.5.3.2.2b\text{-}3)$$

$$\delta_s = \frac{1}{1 - \frac{\Sigma P_u}{\phi_K \Sigma P_e}} \qquad (4.5.3.2.2b\text{-}4)$$

$$P_e = \frac{\pi^2 E}{\left(\frac{K\ell}{r_s}\right)^2} A_g \qquad (6.9.4.1.2\text{-}1)$$

where:

A_g = gross cross-sectional area of the member (in.^{2})

K = effective length factor in the plane of buckling determined as specified in Article 4.6.2.5

ℓ = unbraced length in the plane of buckling (in.)

r_s = radius of gyration about the axis normal to the plane of buckling (in.)

6.9.3—Limiting Slenderness Ratio

Compression members shall satisfy the slenderness requirements specified herein.

- For primary members: ..... $\frac{K\ell}{r} \leq 120$
- For secondary members: ..... $\frac{K\ell}{r} \leq 140$

where:

K = effective length factor specified in Article 4.6.2.5

ℓ = unbraced length (in.)

r = radius of gyration (in.)

For the purpose of this Article only, the radius of gyration may be computed on a notional section that neglects part of the area of a component, provided that:

- The capacity of the component based on the actual area and radius of gyration exceeds the factored loads, and
- The capacity of the notional component based on a reduced area and corresponding radius of gyration also exceeds the factored loads.

6.10.2—Cross-Section Proportion Limits

6.10.2.1—Web Proportions

6.10.2.1.1—Webs without Longitudinal Stiffeners

Webs shall be proportioned such that:

$$\frac{D}{t_w} \leq 150 \qquad (6.10.2.1.1\text{-}1)$$

6.10.2.2—Flange Proportions

Compression and tension flanges shall be proportioned such that:

$$\frac{b_f}{2t_f} \leq 12.0, \qquad (6.10.2.2\text{-}1)$$

$$b_f \geq D/6, \qquad (6.10.2.2\text{-}2)$$

$$t_f \geq 1.1t_w, \qquad (6.10.2.2\text{-}3)$$

and:

$$0.1 \leq \frac{I_{yc}}{I_{yt}} \leq 10 \qquad (6.10.2.2\text{-}4)$$

where:

M_{2b} = moment on compression member due to factored gravity loads that result in no appreciable sidesway calculated by conventional first-order elastic frame analysis; always positive (kip-ft)

M_{2s} = moment on compression member due to factored lateral or gravity loads that result in sidesway, Δ, greater than $\ell_u/1500$, calculated by conventional first-order elastic frame analysis; always positive (kip-ft)

f_{2b} = stress corresponding to M_{2b} (ksi)

f_{2s} = stress corresponding to M_{2s} (ksi)

P_u = factored axial load (kip)

ϕ_K = stiffness reduction factor; 0.75 for concrete members and 1.0 for steel and aluminum members

P_e = Euler buckling load (kip)

For steel/concrete composite columns, the Euler buckling load, P_e, shall be determined as specified in Article 6.9.5.1. For all other cases, P_e shall be taken as:

$$P_e = \frac{\pi^2 EI}{(K\ell_u)^2} \qquad (4.5.3.2.2b\text{-}5)$$

where:

E = modulus of elasticity (ksi)

I = moment of inertia about axis under consideration (in.^{4})

K = effective length factor in the plane of bending as specified in Article 4.6.2.5. For calculation of δ_b, P_e shall be based on the K-factor for braced frames; for calculation of δ_s, P_e shall be based on the K-factor for unbraced frames

ℓ_u = unsupported length of a compression member (in.)

For all other cases, C_m shall be taken as 1.0.

Where compression members are subject to flexure about both principal axes, the moment about each axis shall be magnified by δ, determined from the corresponding conditions of restraint about that axis.

4.6.2.5—Effective Length Factor, *K*

Physical column lengths shall be multiplied by an effective length factor, K, to compensate for rotational and translational boundary conditions other than pinned ends.

In the absence of a more refined analysis, where lateral stability is provided by diagonal bracing or other suitable means, the effective length factor in the braced plane, K, for the compression members in triangulated trusses, trusses, and frames may be taken as:

- For bolted or welded end connections at both ends: $K = 0.750$

Table C4.6.2.5-1—Effective Length Factors, *K*

	(a)	(b)	(c)	(d)	(e)	(f)
Buckled shape of column is shown by dashed line	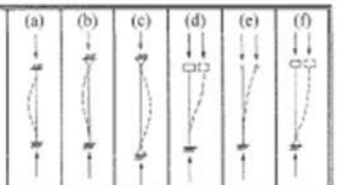					
Theoretical K value	0.5	0.7	1.0	1.0	2.0	2.0
Design value of K when ideal conditions are approximated	0.65	0.80	1.0	1.2	2.1	2.0
End condition code		Rotation fixed Rotation free Rotation fixed Rotation free		Translation fixed Translation fixed Translation free Translation free		

AASHTO LRFD 6.9.4.1 **Column resistance in terms of stress (PHIc=0.95)**

y=Pr=phic*Pn/Ag phic=0.95
x=kl/r
$y = 17E\text{-}06x^3 - 0.0043x^2 + 0.0143x + 47.453$

KL/r	Pe for Ag=1	Po for Ag=Q=1, Fy=50	Pn for Ag=1	Pr=phic*Pn/Ag
0.01	2862198662.40	50.00	50.00	47.5
5.00	11448.79	50.00	49.91	47.4
10.00	2862.20	50.00	49.64	47.2
15.00	1272.09	50.00	49.18	46.7
20.00	715.55	50.00	48.56	46.1
25.00	457.95	50.00	47.77	45.4
30.00	318.02	50.00	46.82	44.5
35.00	233.65	50.00	45.72	43.4
40.00	178.89	50.00	44.48	42.3
45.00	141.34	50.00	43.12	41.0
50.00	114.49	50.00	41.65	39.6
55.00	94.62	50.00	40.08	38.1
60.00	79.51	50.00	38.43	36.5
65.00	67.74	50.00	36.71	34.9
70.00	58.41	50.00	34.94	33.2
75.00	50.88	50.00	33.14	31.5
80.00	44.72	50.00	31.31	29.7
85.00	39.62	50.00	29.48	28.0
90.00	35.34	50.00	27.65	26.3
95.00	31.71	50.00	25.85	24.6
100.00	28.62	50.00	24.07	22.9
105.00	25.96	50.00	22.33	21.2
110.00	23.65	50.00	20.64	19.6
115.00	21.64	50.00	18.98	18.0
120.00	19.88	50.00	17.43	16.6

KL/r	phic*Pn/Ag	fit/actual
0.01	47.5	0.9990
5.00	47.4	1.0001
10.00	47.2	1.0006
15.00	46.8	1.0007
20.00	46.2	1.0005
25.00	45.4	1.0002
30.00	44.5	0.9999
35.00	43.4	0.9996
40.00	42.2	0.9995
45.00	40.9	0.9994
50.00	39.5	0.9995
55.00	38.1	0.9996
60.00	36.5	0.9999
65.00	34.9	1.0002
70.00	33.2	1.0005
75.00	31.5	1.0009
80.00	29.8	1.0011
85.00	28.0	1.0012
90.00	26.3	1.0012
95.00	24.6	1.0011
100.00	22.9	1.0008
105.00	21.2	1.0006
110.00	19.6	1.0007
115.00	18.1	1.0030
120.00	16.6	1.0039

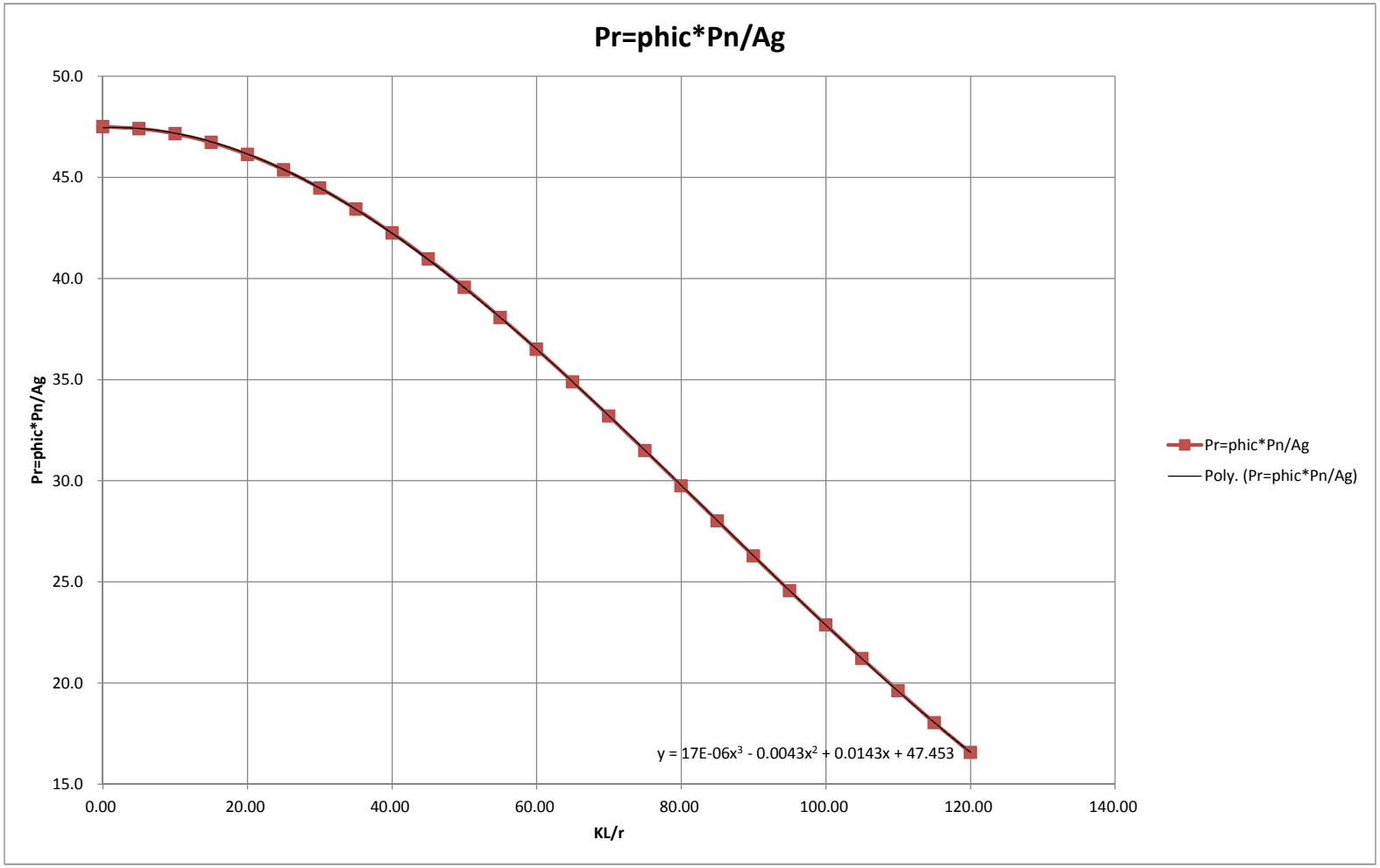
Pr=phic*Pn/Ag
50.0
45.0
40.0
35.0
30.0
25.0
20.0
15.0
Pr=phic*Pn/Ag
0.00
20.00
40.00
60.00
80.00
100.00
120.00
140.00
KL/r
y = 17E-06x³ - 0.0043x² + 0.0143x + 47.453
Pr=phic*Pn/Ag
Poly. (Pr=phic*Pn/Ag)

6.14.2—Trusses

6.14.2.10—Factored Resistance

The factored resistance of tension members shall satisfy the requirements specified in Article 6.8.2.

The factored resistance of compression members shall satisfy the requirements specified in Article 6.9.2.

The nominal bending resistance of the members whose factored resistance is governed by interaction equations, specified in Articles 6.8.2.3 or 6.9.2.2, shall be evaluated as specified in Article 6.12.

6.8—TENSION MEMBERS

6.8.1—General

Members and splices subjected to axial tension shall be investigated for:

- Yield on the gross section using Eq. 6.8.2.1-1 and
- Fracture on the net section using Eq. 6.8.2.1-2.

Holes larger than those typically considered for connectors such as bolts shall be deducted in determining the gross section area.

The determination of the net section shall require consideration of:

- The gross area from which deductions will be made or reduction factors applied, as appropriate;
- Deductions for all holes in the design cross-section;
- Correction of the bolt hole deductions for the stagger rule specified in Article 6.8.3;
- Application of the reduction factor U specified in Article 6.8.2.2 for members and Article 6.13.5.2 for splice plates and other splicing elements to account for shear lag; and
- Application of the 85-percent maximum area efficiency factor for splice plates and other splicing elements specified in Article 6.13.5.2.

Tension members shall satisfy the slenderness requirements specified in Article 6.8.4 and the fatigue requirements of Article 6.6.1. Block shear strength shall be investigated at end connections as specified in Article 6.13.4.

6.13.5.2—Tension

The factored resistance, R_r, in tension shall be taken as the least of the values given by either Eqs. 6.8.2.1-1 and 6.8.2.1-2 for yielding and fracture, respectively, or the block shear rupture resistance specified in Article 6.13.4.

In determining P_{nu}, as specified in Eq. 6.8.2.1-2, for lateral connection plates, splice plates, and gusset plates, the reduction factor, U, specified in Article 6.8.2.2, shall be taken to be equal to 1.0, and the net area of the plate, A_n, used in Eq. 6.8.2.1-2, shall not be taken as greater than 85 percent of the gross area of the plate.

for tension member use An*U
for splice plate use An<0.85Ag with U=1.0

6.8.2—Tensile Resistance

6.8.2.1—General

The factored tensile resistance, P_r, shall be taken as the lesser of the values given by Eqs. 6.8.2.1-1 and 6.8.2.1-2.

$$P_r = \phi_y P_{ny} = \phi_y F_y A_g \qquad (6.8.2.1\text{-}1)$$

$$P_r = \phi_u P_{nu} = \phi_u F_u A_n R_p U \qquad (6.8.2.1\text{-}2)$$

where:

P_{ny} = nominal tensile resistance for yielding in gross section (kip)
F_y = specified minimum yield strength (ksi)
A_g = gross cross-sectional area of the member (in.^{2})
F_u = tensile strength (ksi)

A_n = net area of the member as specified in Article 6.8.3 (in.^{2})
R_p = reduction factor for holes taken equal to 0.90 for bolt holes punched full size and 1.0 for bolt holes drilled full size or subpunched and reamed to size
U = reduction factor to account for shear lag; 1.0 for components in which force effects are transmitted to all elements, and as specified in Article 6.8.2.2 for other cases
ϕ_y = resistance factor for yielding of tension members as specified in Article 6.5.4.2
ϕ_u = resistance factor for fracture of tension members as specified in Article 6.5.4.2

xbar=y of a WT cut from same section, per AISC Commentary D.3.3

Table 6.8.2.2-1—Shear Lag Factors for Connections to Tension Members

Case	Description of Element		Shear Lag Factor, U	Example
1	All tension members where the tension load is transmitted directly to each of cross-sectional elements by fasteners or welds (except as in Cases 3, 4, 5, and 6).		$U = 1.0$	—
2	All tension members, except plates and HSS, where the tension load is transmitted to some but not all of the cross-sectional elements by fasteners or longitudinal welds. (Alternatively, for W, M, S, and HP, Case 7 may be used.)		$U = 1 - \frac{\bar{x}}{L}$	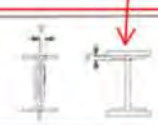
7	W, M, S, or HP Shapes or Tees cut from these shapes (If U is calculated per Case 2, the larger value is permitted to be used.)	with flange connected with 3 or more fasteners per line in direction of loading	$b_f \geq \frac{2}{3}d \ldots U = 0.90$ $b_f < \frac{2}{3}d \ldots U = 0.85$	—
		with web connected with 4 or more fasteners in direction of loading	$U = 0.70$	—

determination of the net effective area A_e can be simplified using the provisions in Chapter K.

D3. AREA DETERMINATION

1. Gross Area

For HSS, ASTM A500 tolerances allow for a wall thickness that is not greater than ± 10 percent under thickness; consequently the gross area for ASTM A500 HSS is to be computed using 93 percent of the nominal wall thickness. This reduction is included in the tabulated properties for these sections that are included in the AISC *Manual of Steel Construction* (AISC, 2005a).

2. Net Area

The critical net area is based on net width and load transfer at a particular chain. Because of possible damage around a hole during drilling or punching operations, 1/16 in. (1.5 mm) is added to the nominal hole diameter when computing the critical net area.

3. Effective Net Area

Section D3.3 deals with the effect of shear lag, applicable to both welded and bolted tension members. The reduction coefficient U is applied to the net area A_n of bolted members and to the gross area A_g of welded members. As the length of the connection l is increased, the shear lag effect diminishes. This concept is expressed empirically by the equation for U. Using this expression to compute the effective area, the estimated strength of some 1,000 bolted and riveted connection test specimens, with few exceptions, correlated with observed test results within a scatterband of ±10 percent (Munse and Chesson, 1963). Newer research provides further justification for the current provisions (Easterling and Gonzales, 1993).

For any given profile and configuration of connected elements, $\bar{x}$ is the perpendicular distance from the connection plane, or face of the member, to the centroid of the member section resisting the connection force, as shown in Figure C-D3.1. The length l is a function of the number of rows of fasteners or the length of weld. The length l is illustrated as the distance, parallel to the line of force, between the first and last row of fasteners in a line for bolted connections. The number of bolts in a line, for the purpose of the determination of l, is determined by the line with the maximum number of bolts in the connection. For staggered bolts, the out-to-out dimension is used for l, as shown in Figure C-D3.2.

There is insufficient data for establishing a value of U if all lines have only one bolt, but it is probably conservative to use A_e equal to the net area of the connected element. The limit states of block shear (Section J4.3) and bearing (Section J3.10), which must be checked, will probably control the design.

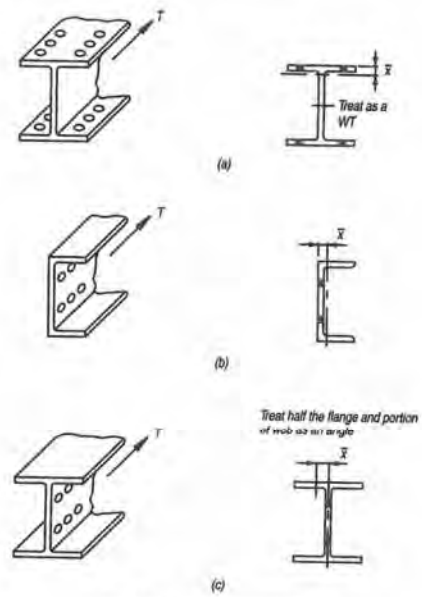

Fig. C-D3.1. Determination of $\bar{x}$ for U.

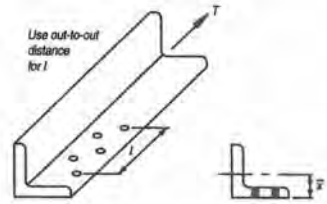

Fig. C-D3.2. Determination of l for U for bolted connections with staggered holes.

6.8.3—Net Area

The net area, A_n, of an element is the product of the thickness of the element and its smallest net width. The width of each standard bolt hole shall be taken as the nominal diameter of the hole. The width of oversize and slotted holes, where permitted for use in Article 6.13.2.4.1, shall be taken as the nominal diameter or width of the hole, as applicable, specified in Article 6.13.2.4.2. The net width shall be determined for each chain of holes extending across the member or element along any transverse, diagonal, or zigzag line.

The net width for each chain shall be determined by subtracting from the width of the element the sum of the widths of all holes in the chain and adding the quantity $s^2/4g$ for each space between consecutive holes in the chain, where:

s = pitch of any two consecutive holes (in.)
g = gage of the same two holes (in.)

For angles, the gage for holes in opposite adjacent legs shall be the sum of the gages from the back of the angles less the thickness.

6.8.4—Limiting Slenderness Ratio

Tension members other than rods, eyebars, cables, and plates shall satisfy the slenderness requirements specified below:

- For primary members subject to stress reversals ..... $\frac{\ell}{r} \leq 140$
- For primary members not subject to stress reversals ..... $\frac{\ell}{r} \leq 200$
- For secondary members ..... $\frac{\ell}{r} \leq 240$

where:

ℓ = unbraced length (in.)
r = radius of gyration (in.)

6.6.1.2.5—Fatigue Resistance

Except as specified below, nominal fatigue resistance shall be taken as:

- For the Fatigue I load combination and infinite life:

$$(\Delta F)_n = (\Delta F)_{TH} \qquad (6.6.1.2.5\text{-}1)$$

Table 6.6.1.2.3-1 (continued)—Detail Categories for Load-Induced Fatigue

Description	Category	Constant A $(\text{ksi})^3$	Threshold $(\Delta F)_{TH}$ ksi	Potential Crack Initiation Point	Illustrative Examples
Section 2—Connected Material in Mechanically Fastened Joints (continued)					
2.2 Base metal at the net section of high-strength bolted joints designed as bearing-type connections but fabricated and installed to all requirements for slip-critical connections with pretensioned high-strength bolts installed in holes drilled full size or subpunched and reamed to size. (Note: see Condition 2.3 for bolt holes punched full size; see Condition 2.5 for bolted angle or tee section member connections to gusset or connection plates.)	B	120×10^8	16	In the net section originating at the side of the hole	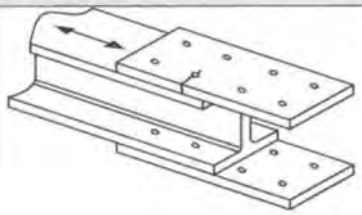

6.14.2.10 Tension Member Example, summarized in table for all members

input:				ouput:		
location	L24-L24'					
member	tension chd					
section	W14x120			Lmin	24.80	connection
Fy		50.00	ksi	An	31.78	
Fu		65.00	ksi	U*An	30.19	tension member
Ag		35.30	in2	0.85 Ag	30.01	splice plate
bf		14.67	in	use U*Ar	30.19	
tf		0.94	in			
x bar for U=1-x/L		1.24	in			
xbar for section	WT7x60					
bolt hole dia		0.94	in			
bolt holes total		4				
phiy		0.95	6.5.4.2			
phiu		0.80	6.5.4.2			
U desired		0.95	6.8.2.2	check connection length > Lmin		
STRI axial force		1437.00	k	< phiy*Pı	1676.75	6.8.2.1-1
				< phiu*Pı	1569.69	6.8.2.1-2
SVCII axial force		1098.00	k			
FATI axial force		175.00	k	P/(U*An)	5.8	< 16 ksi Categ B

6.6.1.2.5 Fatigue

6.6.1.2.5-1

Fatigue stress on net section < 16 ksi Category B

connection STRI design force 6.13.1

75% resistance	1177.3	k
avg (force+resist)	1503.3	k
use	1503.3	

connection SVC II design force

use	1098.0	k

STRI bolt brg resistance	27.70	STRI No. bolts >	55
SVCII bolt slip resistance	12.90	SVCII No. bolts>	85

E. TRUSS BRACING

SUPERSTRUCTURE DESIGN CALCULATIONS FOR BRIDGE #17, RUTLAND, VT

BRIDGE #17 RUTLAND CITY
ROUTE TH 10 (RIPLEY ROAD) OVER OTTER CREEK
Rutland, Vermont

TRUSS -- BOTTOM CHORD BRACING

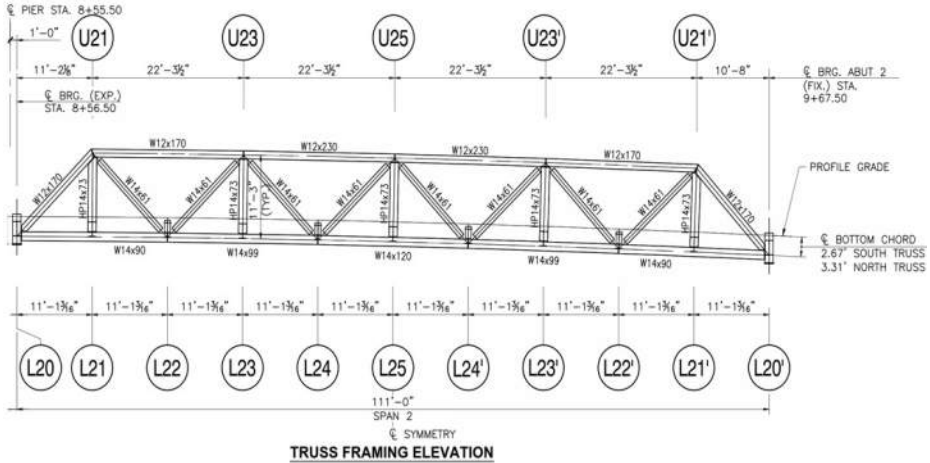

TRUSS FRAMING ELEVATION

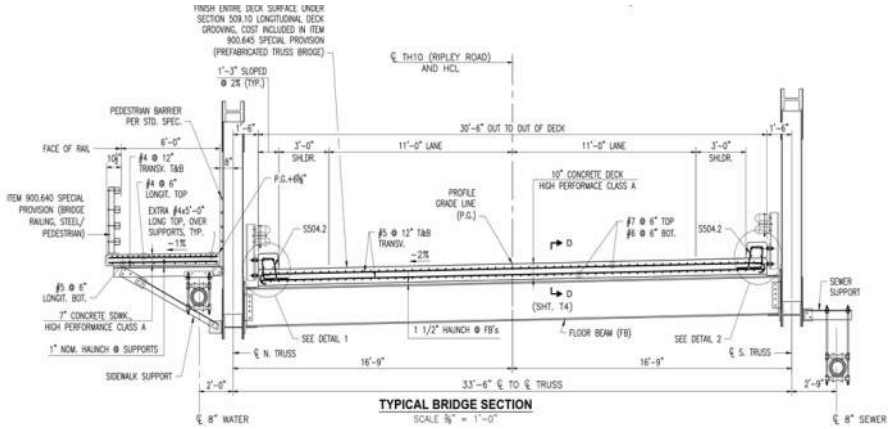

TYPICAL BRIDGE SECTION
SCALE 3/8" = 1'-0"

Wind Pressure

50.00	psf Windward side
25.00	Leeward side
75.00	total

Exposed area

						windward	leeward	
top chord	1.17	*	89.00	*	1.00 =	104.1	104.13	
verticals	1.17	*	10.00	*	5.00 =	58.5	58.50	
diagonals	0.83	*	14.14	*	10.00 =	117.4	117.36	
bottom chord	1.17	*	111.00	*	1.00 =	129.9	129.87	
ped rail	0.33	*	111.00	*	4.00 =	146.5	0.00	
w-beam	1.25	*	111.00	*	1.00 =	138.8	138.75	
curb	0.83	*	111.00	*	1.00 =	92.1	92.13	
deck	0.83	*	111.00	*	1.00 =	92.1	92.13	
						879.4	732.9	sq ft
					Wind pressure	50	25	
					Wind force total =	44.0	18.3	kips
					Distributed along truss =	0.40	0.17	k/ft

Total distributed Wind force = 0.56 k/ft

Frame analysis of truss framing in the plane of the bottom chord shows that X-bracing in the end bays greatly reduces the member forces generated and the displacements in the horizontal plane.

Provide angle X-bracing in the bootm plane at the end bays.

Tu	51.00	kips	
Fy	50.00	ksi	
Fu	65.00	ksi	
phi y	0.95		6.5.4.2
phi u	0.80		
phiy Fy	47.50	ksi	
phiu*Fu	52.00	ksi	
hole dia	1.00	in	
length	33.97	ft	
kl/r max	200.00		6.8.4
Ag requd	1.07	in2	6.8.2.1-1
An requd	0.98	in2	6.8.2.1-2
r requd	2.04	in	
section	L5x5x3/8		
Ag provd	3.61	in2	OK
An provd	3.24	in2	OK
r prov	0.99	in	OK

VTrans Rutland Truss, Bottom Chord Bracing with Diagonals
Units: Ft, Kips

LinPro 2.7.5
File: C:\Users\densfo_t\Documents\LinPro files\VTRANS BOTTOM CHORD FRAMING.aln

---

Input Data

Coordinates of joints/supports

Joint	X	Y	Rx	Ry	Rt	SPRING.X	SPRING.Y	SPRING.ROT	CS.ROT
0	0.000	0.000	1	1	0	0.00E+000	0.00E+000	0.00E+000	0.00
1	11.100	0.000	0	0	0	0.00E+000	0.00E+000	0.00E+000	0.00
2	22.200	0.000	0	0	0	0.00E+000	0.00E+000	0.00E+000	0.00
3	33.300	0.000	0	0	0	0.00E+000	0.00E+000	0.00E+000	0.00
4	44.400	0.000	0	0	0	0.00E+000	0.00E+000	0.00E+000	0.00
5	55.500	0.000	0	0	0	0.00E+000	0.00E+000	0.00E+000	0.00
6	66.600	0.000	0	0	0	0.00E+000	0.00E+000	0.00E+000	0.00
7	77.700	0.000	0	0	0	0.00E+000	0.00E+000	0.00E+000	0.00
8	88.800	0.000	0	0	0	0.00E+000	0.00E+000	0.00E+000	0.00
9	99.900	0.000	0	0	0	0.00E+000	0.00E+000	0.00E+000	0.00
10	111.000	0.000	0	1	0	0.00E+000	0.00E+000	0.00E+000	0.00
11	0.000	33.500	0	1	0	0.00E+000	0.00E+000	0.00E+000	0.00
12	11.100	33.500	0	0	0	0.00E+000	0.00E+000	0.00E+000	0.00
13	22.200	33.500	0	0	0	0.00E+000	0.00E+000	0.00E+000	0.00
14	33.300	33.500	0	0	0	0.00E+000	0.00E+000	0.00E+000	0.00
15	44.400	33.500	0	0	0	0.00E+000	0.00E+000	0.00E+000	0.00
16	55.500	33.500	0	0	0	0.00E+000	0.00E+000	0.00E+000	0.00
17	66.600	33.500	0	0	0	0.00E+000	0.00E+000	0.00E+000	0.00
18	77.700	33.500	0	0	0	0.00E+000	0.00E+000	0.00E+000	0.00
19	88.800	33.500	0	0	0	0.00E+000	0.00E+000	0.00E+000	0.00
20	99.900	33.500	0	0	0	0.00E+000	0.00E+000	0.00E+000	0.00
21	111.000	33.500	0	1	0	0.00E+000	0.00E+000	0.00E+000	0.00

Members

Member	Joint I	Joint J	Type	Releases	
0:	0	1	BOT CHORD	111111	
1:	1	2	BOT CHORD	111111	
2:	2	3	BOT CHORD	111111	
3:	3	4	BOT CHORD	111111	
4:	4	5	BOT CHORD	111111	
5:	5	6	BOT CHORD	111111	
6:	6	7	BOT CHORD	111111	
7:	7	8	BOT CHORD	111111	
8:	8	9	BOT CHORD	111111	
9:	9	10	BOT CHORD	111111	
10:	11	12	BOT CHORD	111111	
11:	12	13	BOT CHORD	111111	
12:	13	14	BOT CHORD	111111	
13:	14	15	BOT CHORD	111111	
14:	15	16	BOT CHORD	111111	
15:	16	17	BOT CHORD	111111	
16:	17	18	BOT CHORD	111111	
17:	18	19	BOT CHORD	111111	
18:	19	20	BOT CHORD	111111	
19:	20	21	BOT CHORD	111111	
20:	0	11	FB	111111	
21:	1	12	FB	111111	
22:	2	13	FB	110110	NOT FIXED
23:	3	14	FB	111111	
24:	4	15	FB	110110	NOT FIXED
25:	5	16	FB	111111	
26:	6	17	FB	110110	NOT FIXED
27:	7	18	FB	111111	
28:	8	19	FB	110110	NOT FIXED
29:	9	20	FB	111111	
30:	10	21	FB	111111	
31:	0	13	DIAGONAL BRACING C	111111	
32:	2	11	DIAGONAL BRACING	111111	
33:	8	21	DIAGONAL BRACING	111111	
34:	10	19	DIAGONAL BRACING C	111111	

Cross Sections

0: FB
A= 2.390E-01
I= 1.430E-02
E= 4176000.00
alpha= 1.2E-05

1: BOT CHORD
A= 1.840E-01

```
          I= 4.820E-02
          E= 4176000.00
          alpha= 1.2E-05

   2: DIAGONAL BRACING
          A= 2.510E-02
          I= 4.220E-04
          E= 4176000.00
          alpha= 1.2E-05

   3: DIAGONAL BRACING C
          A= 2.510E-04
          I= 4.220E-06
          E= 4176000.00
          alpha= 1.2E-05



Load
   0: Distributed Load
          Load Case: PERMANENT BRACING
          Load Name: Distributed
          Coordinate System: Global Y
          a= 0.00
          b= 1.00  On Member
          p1= -0.60
          p2= -0.60

   1: Distributed Load
          Load Case: WIND
          Load Name: Distributed
          Coordinate System: Global Y
          a= 0.00
          b= 1.00  On Member
          p1= -0.56
          p2= -0.56

Load Applied on Joints
   Joint   Applied Loads


Load Applied on Members
   Member  Applied Loads
   10:     0, 1
   11:     0, 1
   12:     0, 1
   13:     0, 1
   14:     0, 1
   15:     0, 1
   16:     0, 1
   17:     0, 1
   18:     0, 1
   19:     0, 1


Load Cases
   0: PERMANENT BRACING
   1: WIND


Load Combinations
   0: STR III = 1.25xPERMANENT BRACING + 1.40xWIND
   1: SVCII = 1.00xPERMANENT BRACING + 1.00xWIND
   2: WIND * 1.4 = 0.00xPERMANENT BRACING + 1.40xWIND


Masses


Masses Applied on Joints
   Joint   Applied Masses


==============================================================================
Static Analysis Results
------------------------------------------------------------------------------


------------------------------------------------------------------------------
Load Combination: WIND * 1.4 = 0.00xPERMANENT BRACING + 1.40xWIND

Displacements of joints in global CS
```

VTrans Rutland Truss, Bottom Chord Bracing with Diagonals
Units: Ft, Kips

Joint	X	Y	phi
0	0.000000	0.000000	-0.000293
1	0.000007	-0.004983	-0.000694
2	0.000019	-0.025403	-0.003616
3	0.000432	-0.079583	-0.004988
4	0.000890	-0.132096	-0.003819
5	0.001349	-0.154563	0.000000
6	0.001807	-0.132096	0.003819
7	0.002266	-0.079583	0.004988
8	0.002679	-0.025403	0.003616
9	0.002691	-0.004983	0.000694
10	0.002698	0.000000	0.000293
11	0.003491	0.000000	-0.000408
12	0.003088	-0.005162	-0.000718
13	0.002679	-0.026220	-0.003626
14	0.002266	-0.079748	-0.004938
15	0.001807	-0.132237	-0.003831
16	0.001349	-0.154713	0.000000
17	0.000890	-0.132237	0.003831
18	0.000432	-0.079748	0.004938
19	0.000019	-0.026220	0.003626
20	-0.000390	-0.005162	0.000718
21	-0.000794	0.000000	0.000408

Reactions in global CS

Joint	Rx	Ry	M
0	0.000000	-0.430841	0.000000
10	0.000000	-0.430841	0.000000
11	0.000000	44.331341	0.000000
21	0.000000	44.331341	0.000000

VTrans Rutland Truss, Bottom Chord Bracing with Diagonals
Units: Ft, Kips

Structure, Load Case: WIND

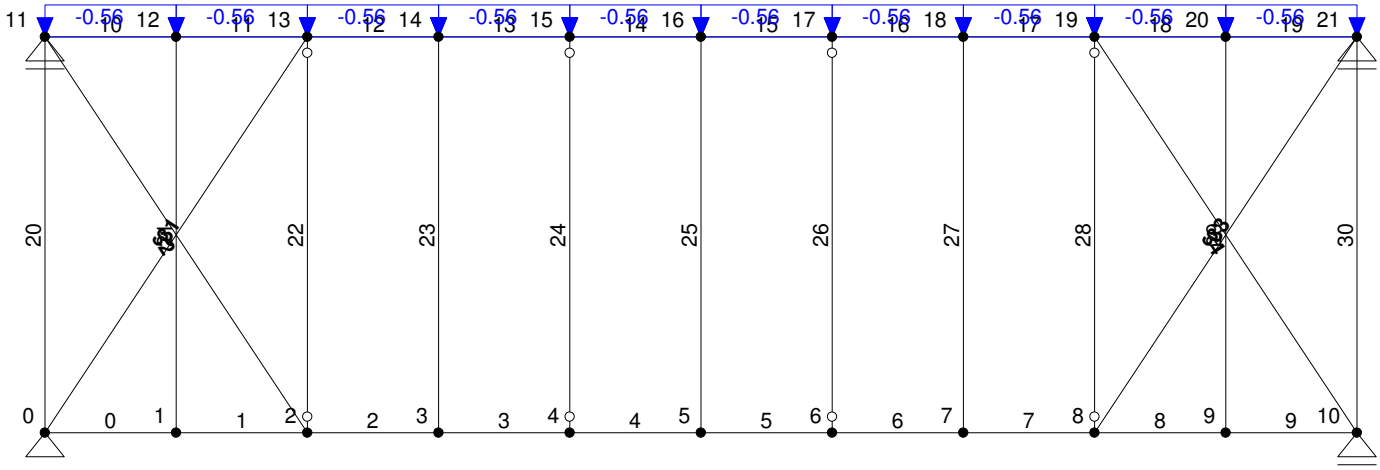

VTrans Rutland Truss, Bottom Chord Bracing with Diagonals
Units: Ft, Kips

Moment Diagram, Comb: WIND * 1.4

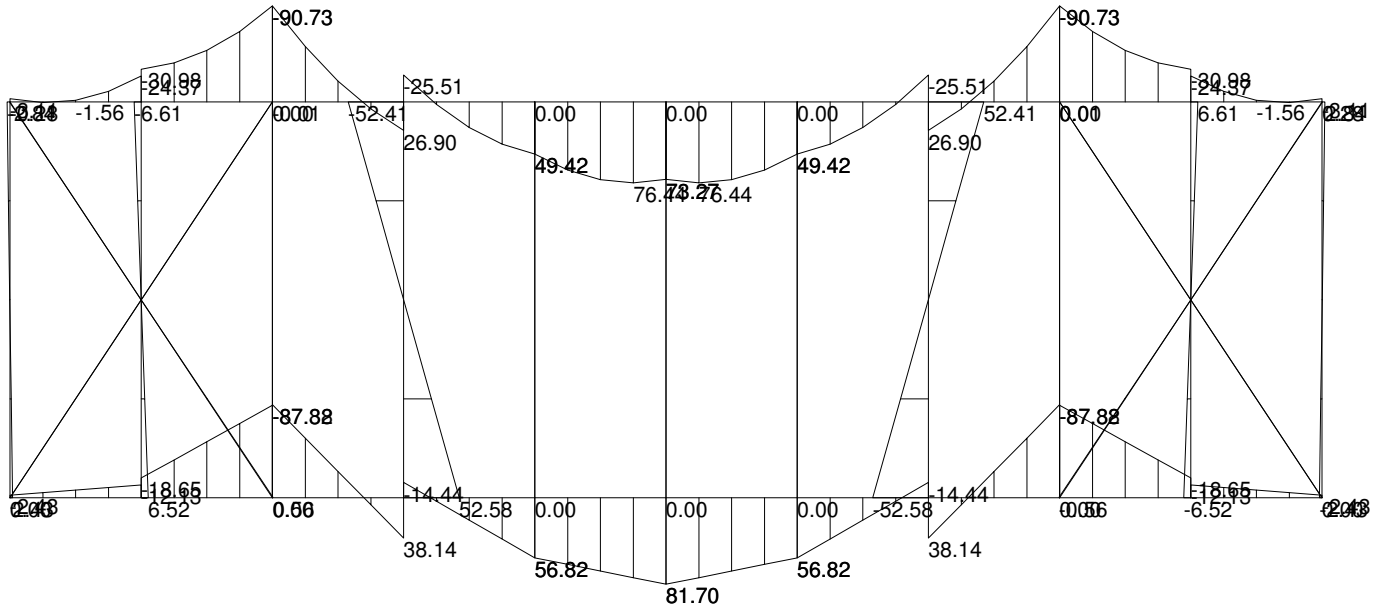

VTrans Rutland Truss, Bottom Chord Bracing with Diagonals
Units: Ft, Kips

Shear Force Diagram, Comb: WIND * 1.4

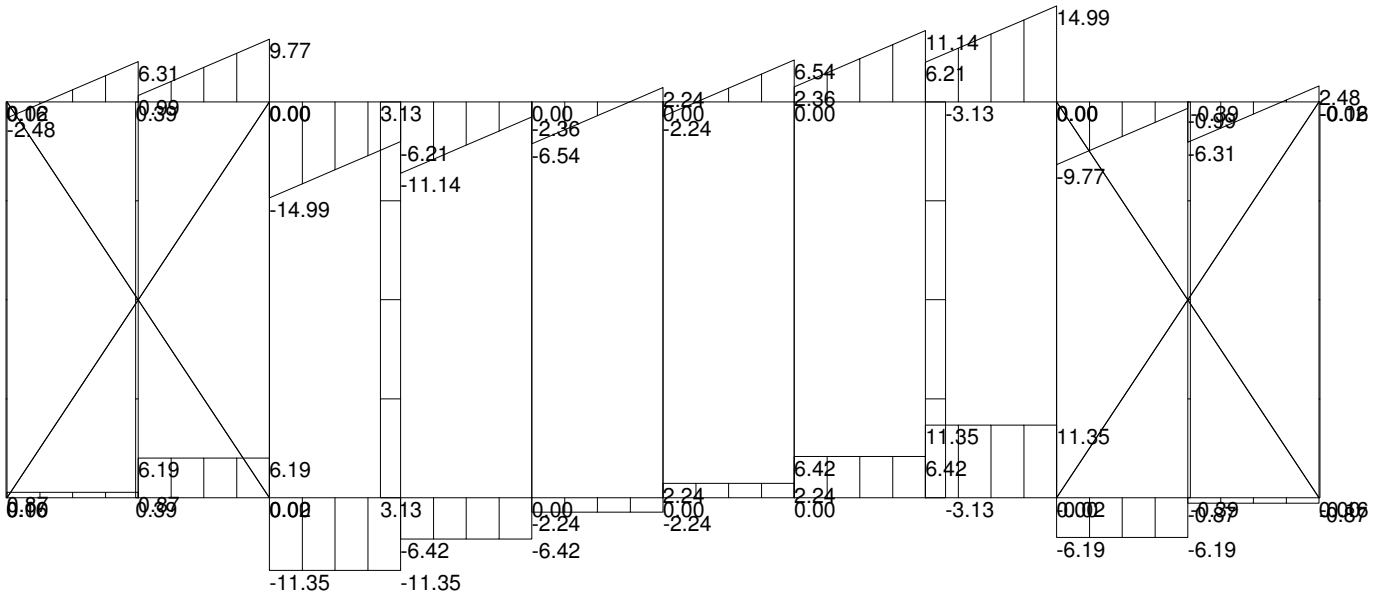

VTrans Rutland Truss, Bottom Chord Bracing with Diagonals
Units: Ft, Kips

Axial Force Diagram, Comb: WIND * 1.4

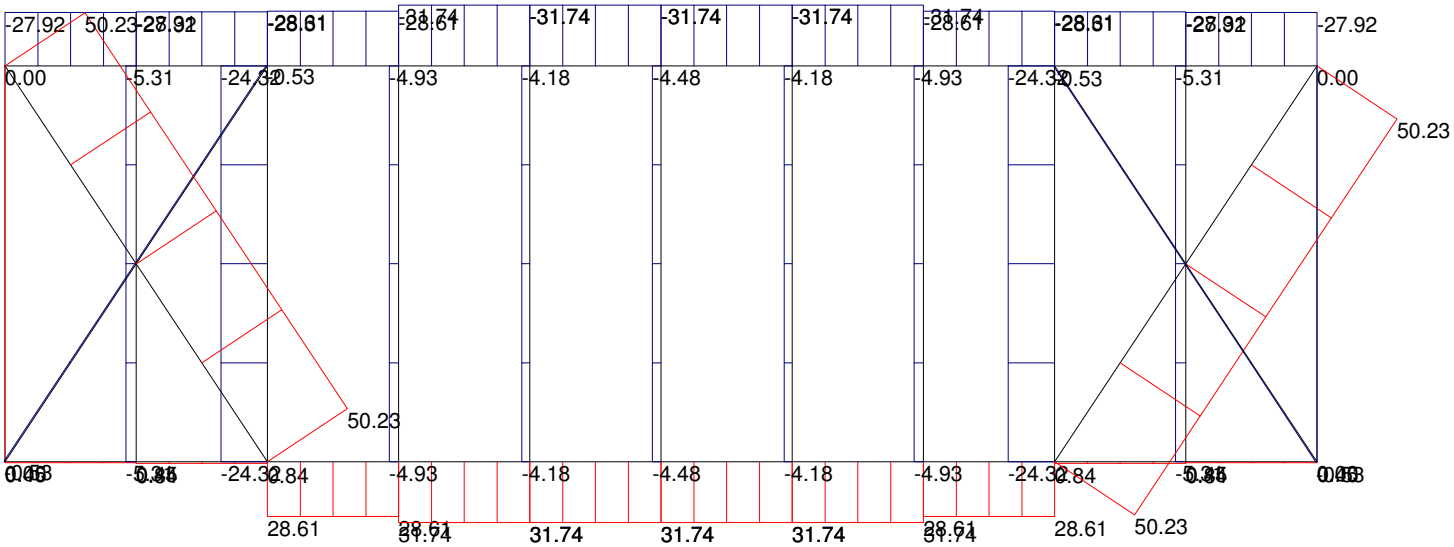

VTrans Rutland Truss, Bottom Chord Bracing with Diagonals
Units: Ft, Kips

Deformed shape, Comb: WIND * 1.4

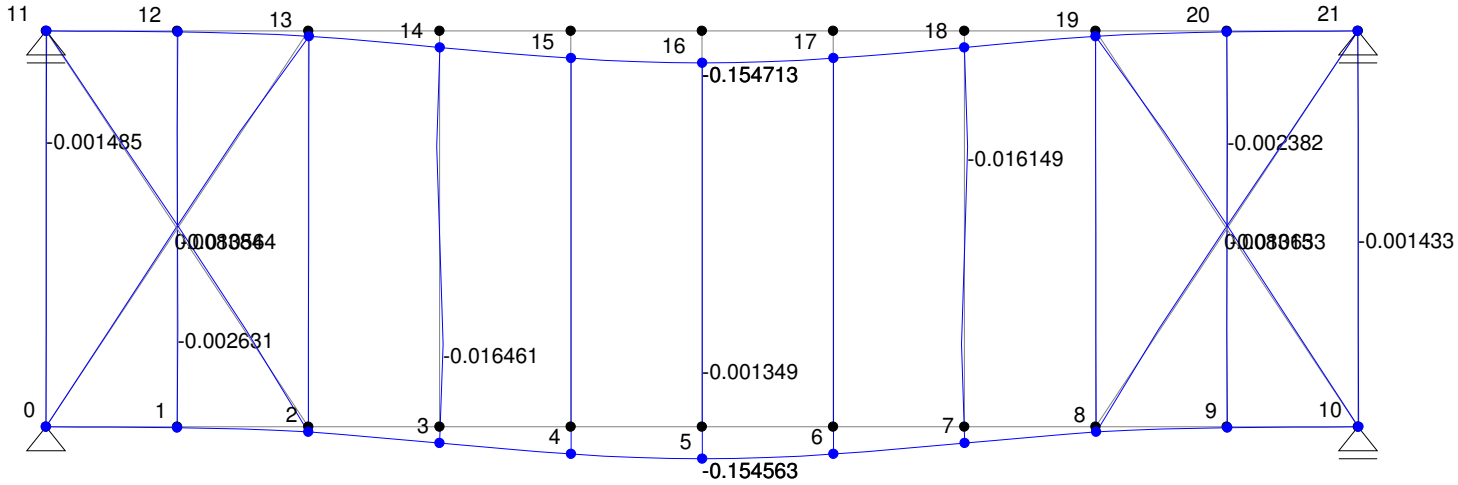

VTrans Rutland Truss, Bottom Chord Bracing without Diagonals
Units: Ft, Kips

LinPro 2.7.5
File: C:\Users\densfo_t\Documents\LinPro files\VTRANS BOTTOM CHORD FRAMING no diagonals.aln

Input Data

Coordinates of joints/supports

Joint	X	Y	Rx	Ry	Rt	SPRING.X	SPRING.Y	SPRING.ROT	CS.ROT
0	0.000	0.000	1	1	0	0.00E+000	0.00E+000	0.00E+000	0.00
1	11.100	0.000	0	0	0	0.00E+000	0.00E+000	0.00E+000	0.00
2	22.200	0.000	0	0	0	0.00E+000	0.00E+000	0.00E+000	0.00
3	33.300	0.000	0	0	0	0.00E+000	0.00E+000	0.00E+000	0.00
4	44.400	0.000	0	0	0	0.00E+000	0.00E+000	0.00E+000	0.00
5	55.500	0.000	0	0	0	0.00E+000	0.00E+000	0.00E+000	0.00
6	66.600	0.000	0	0	0	0.00E+000	0.00E+000	0.00E+000	0.00
7	77.700	0.000	0	0	0	0.00E+000	0.00E+000	0.00E+000	0.00
8	88.800	0.000	0	0	0	0.00E+000	0.00E+000	0.00E+000	0.00
9	99.900	0.000	0	0	0	0.00E+000	0.00E+000	0.00E+000	0.00
10	111.000	0.000	0	1	0	0.00E+000	0.00E+000	0.00E+000	0.00
11	0.000	33.500	0	1	0	0.00E+000	0.00E+000	0.00E+000	0.00
12	11.100	33.500	0	0	0	0.00E+000	0.00E+000	0.00E+000	0.00
13	22.200	33.500	0	0	0	0.00E+000	0.00E+000	0.00E+000	0.00
14	33.300	33.500	0	0	0	0.00E+000	0.00E+000	0.00E+000	0.00
15	44.400	33.500	0	0	0	0.00E+000	0.00E+000	0.00E+000	0.00
16	55.500	33.500	0	0	0	0.00E+000	0.00E+000	0.00E+000	0.00
17	66.600	33.500	0	0	0	0.00E+000	0.00E+000	0.00E+000	0.00
18	77.700	33.500	0	0	0	0.00E+000	0.00E+000	0.00E+000	0.00
19	88.800	33.500	0	0	0	0.00E+000	0.00E+000	0.00E+000	0.00
20	99.900	33.500	0	0	0	0.00E+000	0.00E+000	0.00E+000	0.00
21	111.000	33.500	1	1	0	0.00E+000	0.00E+000	0.00E+000	0.00

Members

Member	Joint I	Joint J	Type	Releases	
0:	0	1	BOT CHORD	111111	
1:	1	2	BOT CHORD	111111	
2:	2	3	BOT CHORD	111111	
3:	3	4	BOT CHORD	111111	
4:	4	5	BOT CHORD	111111	
5:	5	6	BOT CHORD	111111	
6:	6	7	BOT CHORD	111111	
7:	7	8	BOT CHORD	111111	
8:	8	9	BOT CHORD	111111	
9:	9	10	BOT CHORD	111111	
10:	11	12	BOT CHORD	111111	
11:	12	13	BOT CHORD	111111	
12:	13	14	BOT CHORD	111111	
13:	14	15	BOT CHORD	111111	
14:	15	16	BOT CHORD	111111	
15:	16	17	BOT CHORD	111111	
16:	17	18	BOT CHORD	111111	
17:	18	19	BOT CHORD	111111	
18:	19	20	BOT CHORD	111111	
19:	20	21	BOT CHORD	111111	
20:	0	11	FB	111111	
21:	1	12	FB	111111	
22:	2	13	FB	110110	NOT FIXED
23:	3	14	FB	111111	
24:	4	15	FB	110110	NOT FIXED
25:	5	16	FB	111111	
26:	6	17	FB	110110	NOT FIXED
27:	7	18	FB	111111	
28:	8	19	FB	110110	NOT FIXED
29:	9	20	FB	111111	
30:	10	21	FB	111111	

Cross Sections

0: FB
A= 2.390E-01
I= 1.430E-02
E= 4176000.00
alpha= 1.2E-05

1: BOT CHORD
A= 1.840E-01
I= 4.820E-02
E= 4176000.00
alpha= 1.2E-05

```
   2: DIAGONAL BRACING
           A= 2.510E-02
           I= 4.220E-04
           E= 4176000.00
           alpha= 1.2E-05

   3: DIAGONAL BRACING C
           A= 2.510E-04
           I= 4.220E-06
           E= 4176000.00
           alpha= 1.2E-05



Load
   0: Distributed Load
           Load Case: PERMANENT BRACING
           Load Name: Distributed
           Coordinate System: Global Y
           a= 0.00
           b= 1.00  On Member
           p1= -0.60
           p2= -0.60

   1: Distributed Load
           Load Case: WIND
           Load Name: Distributed
           Coordinate System: Global Y
           a= 0.00
           b= 1.00  On Member
           p1= -0.56
           p2= -0.56

Load Applied on Joints
   Joint   Applied Loads


Load Applied on Members
   Member  Applied Loads
   10:     0, 1
   11:     0, 1
   12:     0, 1
   13:     0, 1
   14:     0, 1
   15:     0, 1
   16:     0, 1
   17:     0, 1
   18:     0, 1
   19:     0, 1


Load Cases
   0: PERMANENT BRACING
   1: WIND


Load Combinations
   0: STR III = 1.25xPERMANENT BRACING + 1.40xWIND
   1: SVCII = 1.00xPERMANENT BRACING + 1.00xWIND
   2: WIND * 1.4 = 0.00xPERMANENT BRACING + 1.40xWIND


Masses


Masses Applied on Joints
   Joint   Applied Masses


==============================================================================
Static Analysis Results
------------------------------------------------------------------------------



------------------------------------------------------------------------------
Load Combination: WIND * 1.4 = 0.00xPERMANENT BRACING + 1.40xWIND

Displacements of joints in global CS
     Joint                 X                 Y               phi
         0          0.000000          0.000000         -0.014618
         1          0.000135         -0.187121         -0.017040
         2          0.000426         -0.393624         -0.018609
```

3	0.000717	-0.570474	-0.012135
4	0.001119	-0.682675	-0.007410
5	0.001521	-0.725047	0.000000
6	0.001924	-0.682675	0.007410
7	0.002326	-0.570474	0.012135
8	0.002617	-0.393624	0.018609
9	0.002908	-0.187121	0.017040
10	0.003043	0.000000	0.014618
11	0.003043	0.000000	-0.014758
12	0.002908	-0.187285	-0.017014
13	0.002617	-0.393768	-0.018614
14	0.002326	-0.570622	-0.012133
15	0.001924	-0.682823	-0.007411
16	0.001521	-0.725195	0.000000
17	0.001119	-0.682823	0.007411
18	0.000717	-0.570622	0.012133
19	0.000426	-0.393768	0.018614
20	0.000135	-0.187285	0.017014
21	0.000000	0.000000	0.014758

Reactions in global CS

Joint	Rx	Ry	M
0	0.000000	20.169883	0.000000
10	0.000000	20.169883	0.000000
11	0.000000	23.730617	0.000000
21	0.000000	23.730617	0.000000

VTrans Rutland Truss, Bottom Chord Bracing without Diagonals
Units: Ft, Kips

Structure, Load Case: WIND

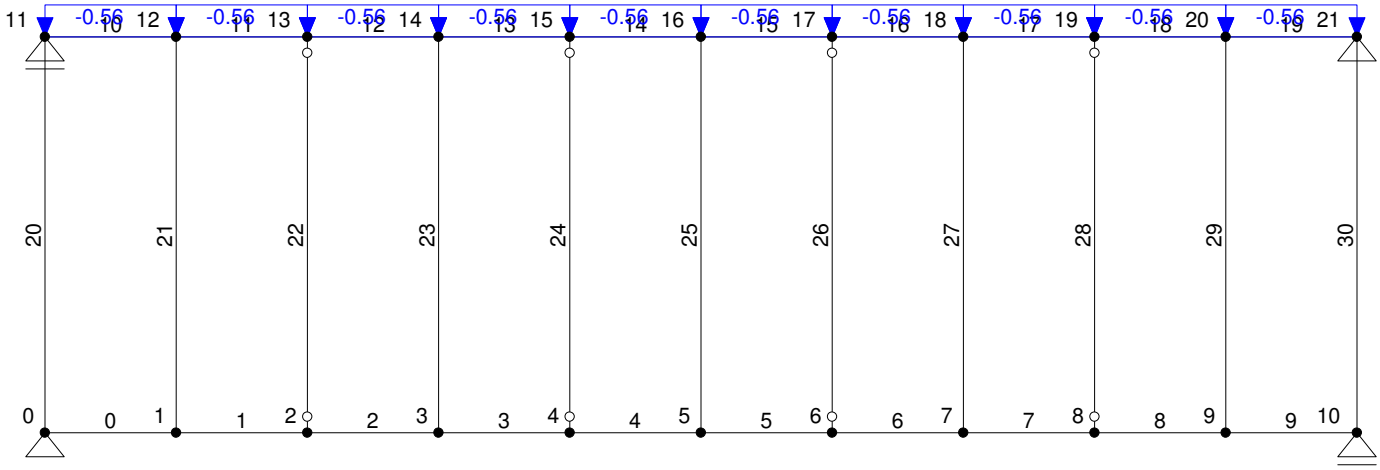

VTrans Rutland Truss, Bottom Chord Bracing without Diagonals
Units: Ft, Kips

Moment Diagram, Comb: WIND * 1.4

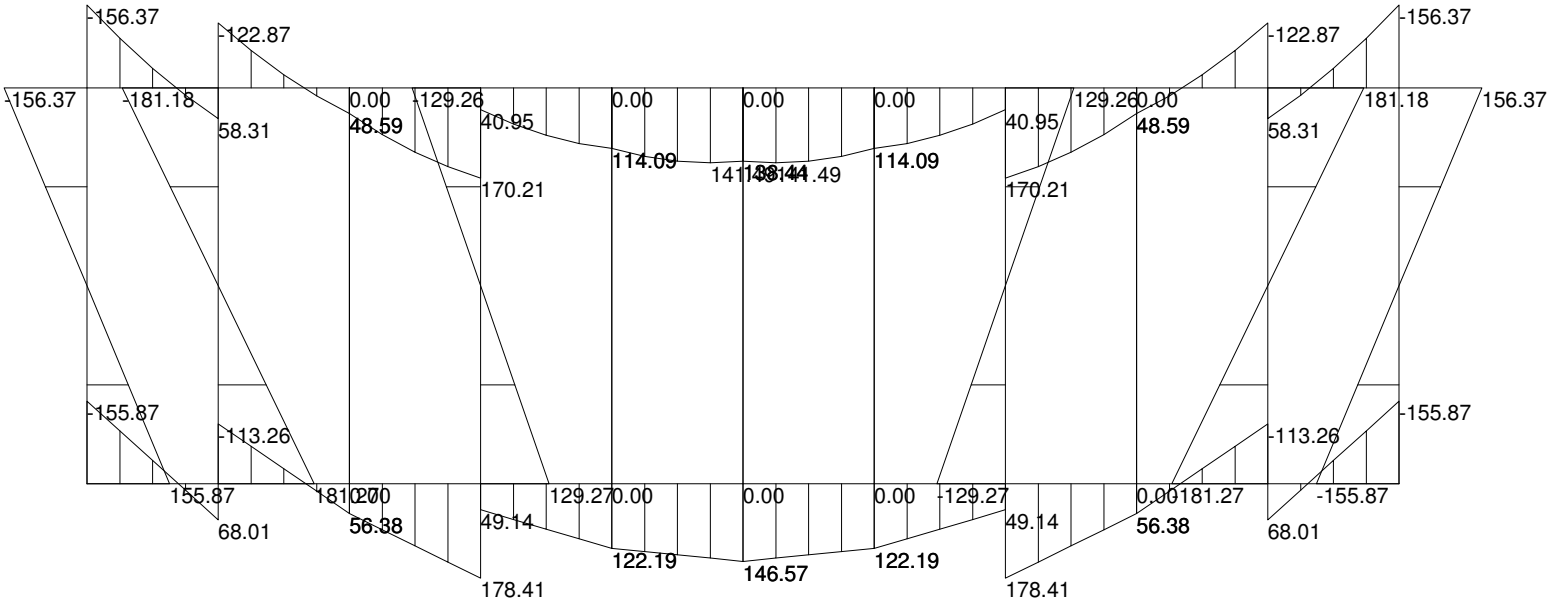

VTrans Rutland Truss, Bottom Chord Bracing without Diagonals
Units: Ft, Kips

Shear Force Diagram, Comb: WIND * 1.4

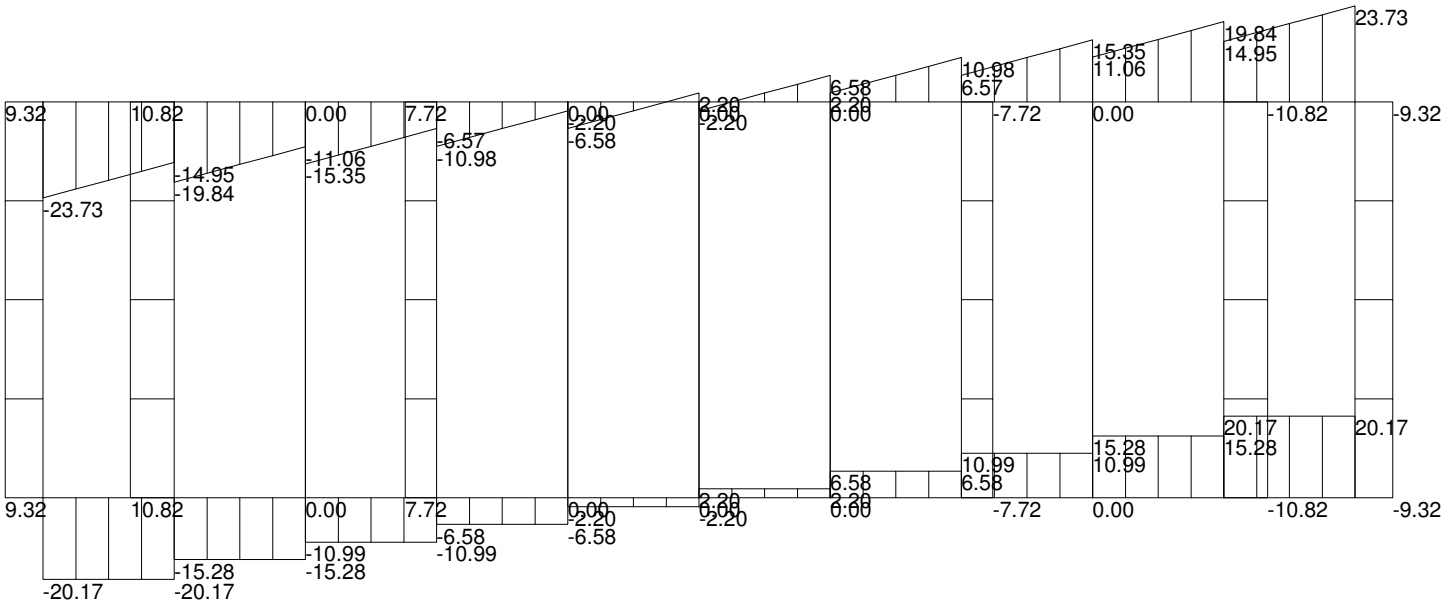

VTrans Rutland Truss, Bottom Chord Bracing without Diagonals
Units: Ft, Kips

Axial Force Diagram, Comb: WIND * 1.4

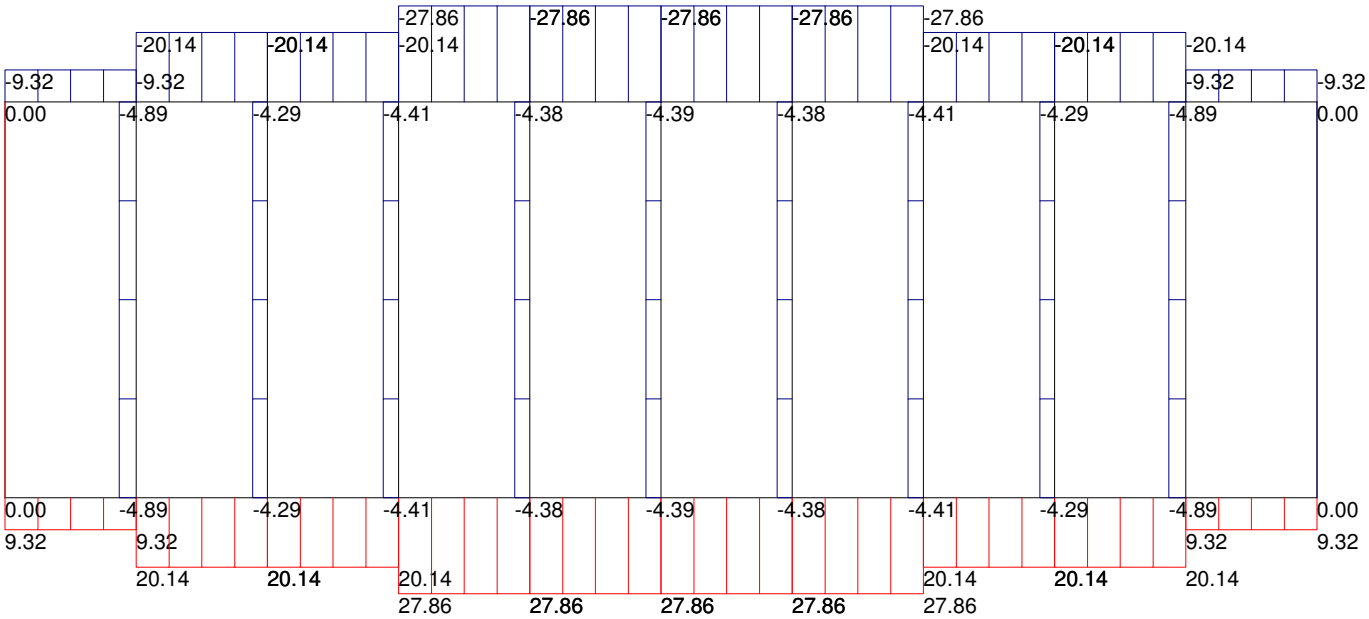

VTrans Rutland Truss, Bottom Chord Bracing without Diagonals
Units: Ft, Kips

Deformed shape, Comb: WIND * 1.4

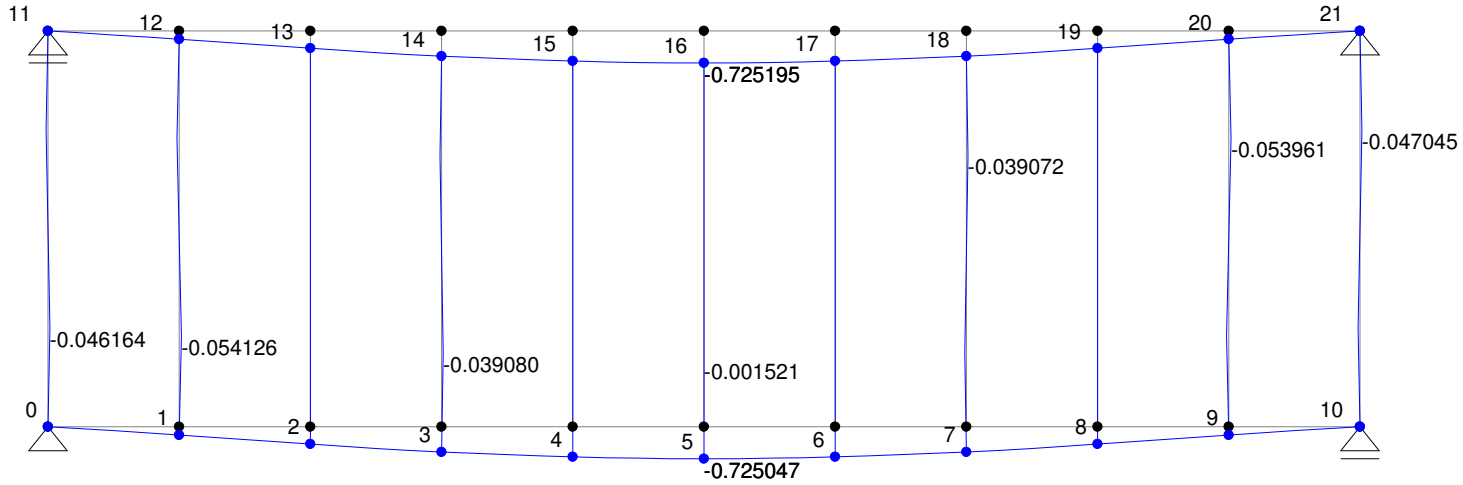

F. GUSSET PLATES DESIGN

SUPERSTRUCTURE DESIGN CALCULATIONS FOR BRIDGE #17, RUTLAND, VT

GUSSET PLATE DESIGN:
Units: kip, inch

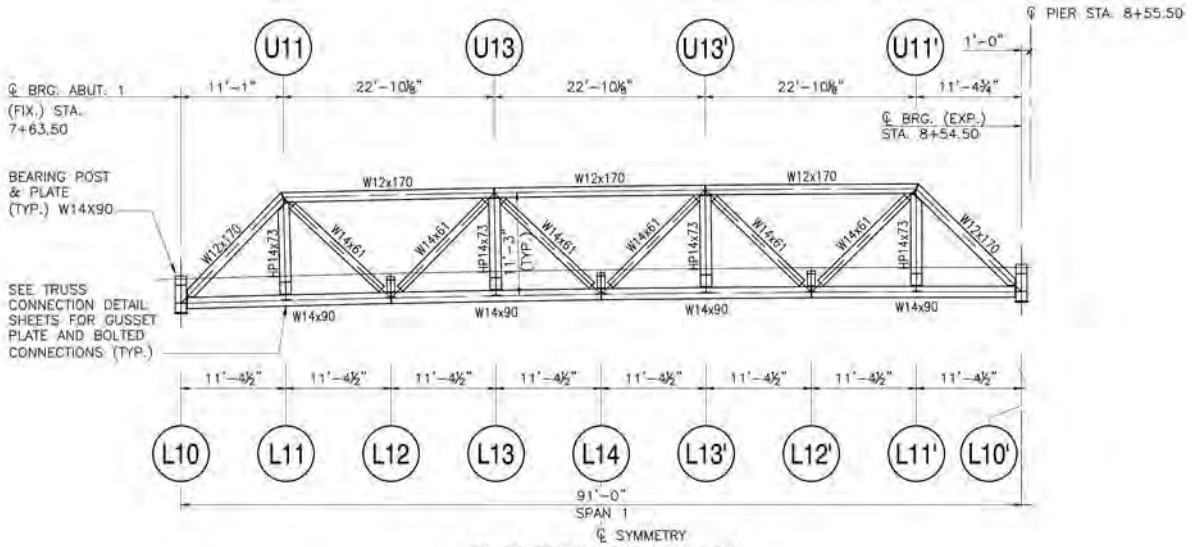

TRUSS FRAMING ELEVATION

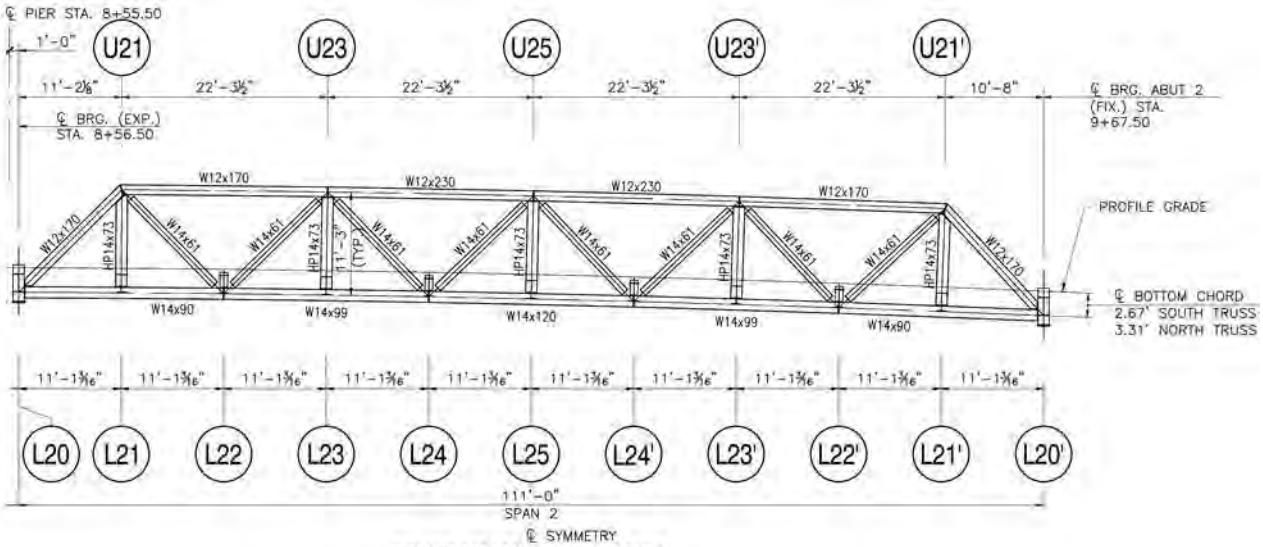

TRUSS FRAMING ELEVATION

PLATE THICKNESSES		
JOINT NO.	GUSSET PL THICKNESS	CHORD PL THICKNESS
L10, L20	1" ALL	NONE
L11, L13, L21, L23, L25	¾" ALL	NONE
L12, L14	1¼" ALL	NONE
L22, L24	1½", 1¾"	NONE
U11,U21	1¼" ALL	NONE
U13	¾"	¾"
U23	¾"	¾"
U25	¾"	1"

Gusset plate design

6.14.2.8—Gusset Plates

6.14.2.8.1—General

Gusset or connection plates should be used for connecting truss members, except where the members are pin-connected. The fasteners connecting each member shall be symmetrical with the axis of the member, so far as practicable, and the connection of all the elements of the member should be given consideration to facilitate the load transfer.

Re-entrant cuts, except curves made for appearance, should be avoided as far as practicable.

Gusset plates shall satisfy the minimum plate thickness requirement for gusset plates used in trusses specified in Article 6.7.3. Gusset plates shall be designed for shear, compression, or tension occurring in the vicinity of each connected member, or some combination thereof, as applicable, according to the requirements specified in Articles 6.14.2.8.3 through 6.14.2.8.5. Gusset plates serving as a chord splice shall also be independently designed as a splice according to the provisions of Article 6.14.2.8.6. The edge slenderness requirement specified in Article 6.14.2.8.7 shall be considered.

Bolted gusset plate connections shall satisfy the applicable requirements of Articles 6.13.1 and 6.13.2. Where filler plates are required, the provisions of Article 6.13.6.1.5 shall apply.

6.14.2.8.2—Multilayered Gusset and Splice Plates

Where multi-layered gusset and splice plates are used, the resistances of the individual plates may be added together when determining the factored resistances specified in Articles 6.14.2.8.3 through 6.14.2.8.6 provided that enough fasteners are present to develop the force in the layered gusset and splice plates.

6.14.2.8.3—Shear Resistance

The factored shear resistance of gusset plates, V_r, shall be taken as the smaller value based on shear yielding or shear rupture.

For shear yielding, the factored shear resistance shall be taken as:

$$V_r = \phi_{vy} 0.58 F_y A_{vg} \Omega \qquad (6.14.2.8.3\text{-}1)$$

where:

ϕ_{vy} = resistance factor for truss gusset plate shear yielding specified in Article 6.5.4.2

Ω = shear reduction factor for gusset plates taken as 0.88

A_{vg} = gross area of the shear plane (in.^{2})

F_y = specified minimum yield strength of the gusset plate (ksi)

6.7.3—Minimum Thickness of Steel

Structural steel, including bracing, cross-frames, and all types of gusset plates, except for gusset plates used in trusses, webs of rolled shapes, closed ribs in orthotropic decks, fillers, and in railings, shall not be less than 0.3125 in. in thickness. The thickness of gusset plates used in trusses shall not be less than 0.375 in.

6.14.2.8.7—Edge Slenderness

If the length of the unsupported edge of a gusset plate exceeds $2.06 t_g (E/F_y)^{1/2}$, where t_g is the gusset plate thickness and F_y is the specified minimum yield strength of the gusset plate, the edge should be stiffened.

6.13—CONNECTIONS AND SPLICES

6.13.1—General

Except as specified otherwise, connections and splices for primary members shall be designed at the strength limit state for not less than the larger of:

- The average of the flexural moment-induced stress, shear, or axial force due to the factored loadings at the point of splice or connection and the factored flexural, shear, or axial resistance of the member or element at the same point, or
- 75 percent of the factored flexural, shear, or axial resistance of the member or element.

6.13.2 discusses bolt requirements

6.13.6.1.5 must reduce bolt strength resistance if fillers > 0.25" thickness
slip critical resistance needs no reduction

Whitmore Section—A portion of a truss gusset plate defined at the end of a member fastener pattern based on 30 degree dispersion patterns from the lead fastener, through which it may be assumed for the purposes of design that all force from the member is evenly distributed into the gusset plate.

Half Through-Truss Spans—A truss system with the roadway located somewhere between the top and bottom chords. It precludes the use of a top lateral system.

For shear rupture, the factored shear resistance shall be determined from Eq. 6.13.5.3-2.

Shear shall be checked on relevant partial and full failure plane widths. Partial shear planes shall only be checked around compression members and only Eq. 6.14.2.8.3-1 shall apply to partial shear planes. The partial shear plane length shall be taken along adjoining member fastener lines between plate edges and other fastener lines. The following partial shear planes, as applicable, shall be evaluated to determine which shear plane controls:

- The plane that parallels the chamfered end of the compression member, as shown in Figure 6.14.2.8.3-1;
- The plane on the side of the compression member that has the smaller framing angle between the member and the other adjoining members, as shown in Figure 6.14.2.8.3-2; and
- The plane with the least cross-sectional shear area if the member end is not chamfered and the framing angle is equal on both sides of the compression member.

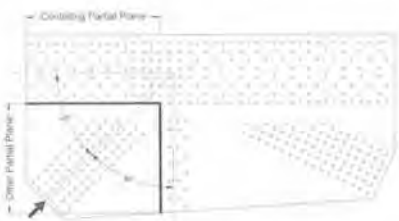

Figure 6.14.2.8.3-1—Example of a Controlling Partial Shear Plane that Parallels the Chamfered End of the Compression Member Since that Member Frames In at an Angle of 45 Degrees to Both the Chord and the Vertical

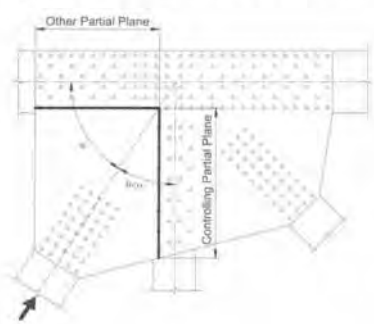

Figure 6.14.2.8.3-2—Example of a Controlling Partial Shear Plane on the Side of a Compression Member Without a Chamfered End that has the Smaller Framing Angle between that Member and the Other Adjoining Members (i.e. θ < α)

6.7.4.4—Trusses and Arches

Diaphragms shall be provided at the connections to floorbeams and at other connections or points of application of concentrated loads. Internal diaphragms may also be provided to maintain member alignment.

Gusset plates engaging a pedestal pin at the end of a truss shall be connected by a diaphragm. The webs of the pedestal should be connected by a diaphragm wherever practical.

If the end of the web plate or cover plate is 4.0 ft or more from the point of intersection of the members, a diaphragm shall be provided between gusset plates engaging main members.

For shear rupture, the factored shear resistance, R_r, of the connection element shall be taken as:

$$R_r = \phi_{vu} 0.58 R_p F_u A_{vn} \qquad (6.13.5.3\text{-}2)$$

where:

A_{vn} = net area of the connection element subject to shear (in.^{2})
F_u = tensile strength of the connection element (ksi)
R_p = reduction factor for holes taken equal to 0.90 for bolt holes punched full size and 1.0 for bolt holes drilled full size or subpunched and reamed to size
ϕ_{vu} = resistance factor for shear rupture of connection elements as specified in Article 6.5.4.2

6.14.2—Trusses

6.14.2.3—Secondary Stresses

The design and details shall be such that secondary stresses will be as small as practicable. Stresses due to the dead load moment of the member shall be considered, as shall those caused by eccentricity of joints or working lines. Secondary stresses due to truss distortion or floorbeam deflection need not be considered in any member whose width measured parallel to the plane of distortion is less than one-tenth of its length.

6.14.2.8.4—Compressive Resistance

The factored compressive resistance, P_r, of gusset plates shall be taken as:

$$P_r = \phi_{cc} P_n \qquad (6.14.2.8.4\text{-}1)$$

where:

ϕ_{cc} = resistance factor for truss gusset plate compression specified in Article 6.5.4.2

P_n = nominal compressive resistance of a Whitmore section determined from Eq. 6.9.4.1.1-1 or 6.9.4.1.1-2, as applicable (kip)

In the calculation of P_n, the slender element reduction factor, Q, shall be taken as 1.0, and the elastic critical buckling resistance, P_e, shall be taken as:

$$P_e = \frac{3.29E}{\left(\frac{L_{mid}}{r_g}\right)^2} A_g \qquad (6.14.2.8.4\text{-}2)$$

where:

A_g = gross cross-sectional area of the Whitmore section determined based on 30 degree dispersion angles, as shown in Figure 6.14.2.8.4-1 (in.^{2}), the Whitmore section shall not be reduced if the section intersects adjoining member bolt lines

L_{mid} = distance from the middle of the Whitmore section to the nearest member fastener line in the direction of the member, as shown in Figure 6.14.2.8.4-1 (in.)

t_g = gusset-plate thickness (in.)

Figure 6.14.2.8.4-1—Example Connection Showing the Whitmore Section for a Compression Member Derived from 30 Degree Dispersion Angles and the Distance L_{mid}

The provisions of this Article shall not be applied to compression chord splices.

P_n shall be determined as follows:

- If $\frac{P_e}{P_o} \geq 0.44$, then:

$$P_n = \left[0.658^{\left(\frac{P_o}{P_e}\right)}\right] P_o \qquad (6.9.4.1.1\text{-}1)$$

- If $\frac{P_e}{P_o} < 0.44$, then:

$$P_n = 0.877 P_e \qquad (6.9.4.1.1\text{-}2)$$

where:

A_g = gross cross-sectional area of the member (in.^{2})

F_y = specified minimum yield strength (ksi)

P_e = elastic critical buckling resistance determined as specified in Article 6.9.4.1.2 for flexural buckling, and as specified in Article 6.9.4.1.3 for torsional bucking or flexural-torsional buckling, as applicable (kips)

P_o = equivalent nominal yield resistance = QF_yA_g (kips)

Q = slender element reduction factor determined as specified in Article 6.9.4.2. Q shall be taken equal to 1.0 for bearing stiffeners.

6.9.4.1.2—Elastic Flexural Buckling Resistance

The elastic critical buckling resistance, P_e, based on flexural buckling shall be taken as:

$$\cancel{P_e = \frac{\pi^2 E}{\left(\frac{K\ell}{r_s}\right)^2} A_g} \qquad (6.9.4.1.2\text{-}1)$$

where:

A_g = gross cross-sectional area of the member (in.^{2})

K = effective length factor in the plane of buckling determined as specified in Article 4.6.2.5

ℓ = unbraced length in the plane of buckling (in.)

r_s = radius of gyration about the axis normal to the plane of buckling (in.)

AASHTO LRFD **Gusset Column resistance in terms of stress (PHIcg=0.75)**

Lmid/tg	Pe for Ag=1	Po for Ag=Q=1, Fy=50	Pn for Ag=1	Pr=phicg*Pn/Ag	x=Lmid/tg Pr = -4.93E-07x^4 + 0.000159x^3 - 0.0153x^2 + 0.1119x + 37.179
0.0	954100000	50.0	50.0	37.5	37.2
5.0	3816.4	50.0	49.7	37.3	37.4
10.0	954.1	50.0	48.9	36.7	36.9
15.0	424.0	50.0	47.6	35.7	35.9
20.0	238.5	50.0	45.8	34.4	34.5
25.0	152.7	50.0	43.6	32.7	32.7
30.0	106.0	50.0	41.0	30.8	30.7
35.0	77.9	50.0	38.2	28.7	28.5
40.0	59.6	50.0	35.2	26.4	26.2
45.0	47.1	50.0	32.1	24.1	23.8
50.0	38.2	50.0	28.9	21.7	21.4
55.0	31.5	50.0	25.8	19.3	19.2
60.0	26.5	50.0	22.7	17.0	17.0
65.0	22.6	50.0	19.8	14.8	14.9
70.0	19.5	50.0	17.1	12.8	13.1
75.0	17.0	50.0	14.9	11.2	11.4
80.0	14.9	50.0	13.1	9.8	9.9
85.0	13.2	50.0	11.6	8.7	8.7
90.0	11.8	50.0	10.3	7.7	7.6
95.0	10.6	50.0	9.3	7.0	6.8
100.0	9.5	50.0	8.4	6.3	6.1
105.0	8.7	50.0	7.6	5.7	5.5
110.0	7.9	50.0	6.9	5.2	5.1
115.0	7.2	50.0	6.3	4.7	4.8
120.0	6.6	50.0	5.8	4.4	4.5

Lmid/tg	12.7
Pr	36.4

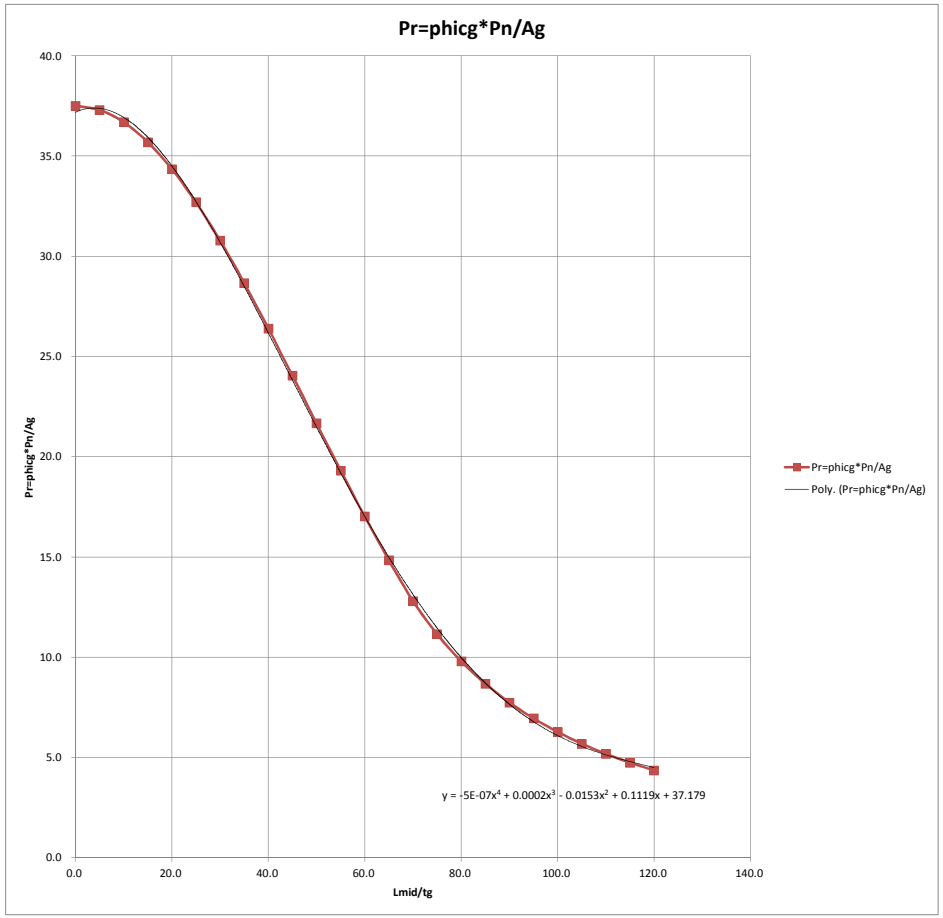

6.14.2.8.5—Tensile Resistance

The factored tensile resistance, R_r, of gusset plates shall be taken as the smallest factored resistance in tension based on yielding, fracture, or block shear rupture determined according to the provisions of Article 6.13.5.2. When checking Eqs. 6.8.2.1-1 and 6.8.2.1-2, the Whitmore section defined in Figure 6.14.2.8.5-1 shall be used to define the effective area. The Whitmore section shall not be reduced if the width intersects adjoining member bolt lines.

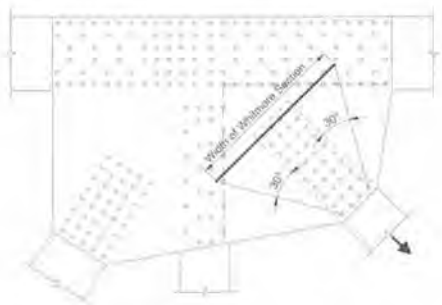

Figure 6.14.2.8.5-1—Example Connection Showing the Whitmore Section for a Tension Member Derived from 30 Degree Dispersion Angles

The provisions of this Article shall not be applied to tension chord splices.

$$I_x = \frac{nm}{12}\left[s^3\left(n^2-1\right)+g^2\left(m^2-1\right)\right] \qquad \text{(C6.13.6.1.4b-3)}$$

where:

m = number of vertical rows of bolts
n = number of bolts in one vertical row
s = vertical pitch (in.)
g = horizontal pitch (in.)

6.13.5.2—Tension

The factored resistance, R_r, in tension shall be taken as the least of the values given by either Eqs. 6.8.2.1-1 and 6.8.2.1-2 for yielding and fracture, respectively, or the block shear rupture resistance specified in Article 6.13.4.

In determining P_{nu}, as specified in Eq. 6.8.2.1-2, for lateral connection plates, splice plates, and gusset plates, the reduction factor, U, specified in Article 6.8.2.2, shall be taken to be equal to 1.0, and the net area of the plate, A_n, used in Eq. 6.8.2.1-2, shall not be taken as greater than 85 percent of the gross area of the plate.

6.8.2—Tensile Resistance

6.8.2.1—General

The factored tensile resistance, P_r, shall be taken as the lesser of the values given by Eqs. 6.8.2.1-1 and 6.8.2.1-2.

$$P_r = \phi_y P_{ny} = \phi_y F_y A_g \qquad (6.8.2.1\text{-}1)$$

$$P_r = \phi_u P_{nu} = \phi_u F_u A_n R_p U \qquad (6.8.2.1\text{-}2)$$

where:

P_{ny} = nominal tensile resistance for yielding in gross section (kip)
F_y = specified minimum yield strength (ksi)
A_g = gross cross-sectional area of the member (in.^{2})
F_u = tensile strength (ksi)

A_n = net area of the member as specified in Article 6.8.3 (in.^{2})
R_p = reduction factor for holes taken equal to 0.90 for bolt holes punched full size and 1.0 for bolt holes drilled full size or subpunched and reamed to size
U = reduction factor to account for shear lag; 1.0 for components in which force effects are transmitted to all elements, and as specified in Article 6.8.2.2 for other cases
ϕ_y = resistance factor for yielding of tension members as specified in Article 6.5.4.2
ϕ_u = resistance factor for fracture of tension members as specified in Article 6.5.4.2

6.13.4—Block Shear Rupture Resistance

The web connection of coped beams and all tension connections, including connection plates, splice plates and gusset plates, shall be investigated to ensure that adequate connection material is provided to develop the factored resistance of the connection.

The connection shall be investigated by considering all possible failure planes in the member and connection plates. Such planes shall include those parallel and perpendicular to the applied forces. The planes parallel to the applied force shall be considered to resist only shear stresses. The planes perpendicular to the applied force shall be considered to resist only tension stresses.

The factored resistance of the combination of parallel and perpendicular planes shall be taken as:

$$R_r = \phi_{bs} R_p (0.58\, F_u A_{vn} + U_{bs} F_u A_{tn}) \le \phi_{bs} R_p (0.58\, F_y A_v + U_{bs} F_u A_{tn}) \qquad (6.13.4\text{-}1)$$

where:

R_p = reduction factor for holes taken equal to 0.90 for bolt holes punched full size and 1.0 for bolt holes drilled full size or subpunched and reamed to size
A_{vg} = gross area along the plane resisting shear stress (in.^{2})
A_{vn} = net area along the plane resisting shear stress (in.^{2})
U_{bs} = reduction factor for block shear rupture resistance taken equal to 0.50 when the tension stress is non-uniform and1.0 when the tension stress is uniform
A_{tn} = net area along the plane resisting tension stress (in.^{2})
F_y = specified minimum yield strength of the connected material (ksi)
F_u = specified minimum tensile strength of the connected material specified in Table 6.4.1-1 (ksi)
ϕ_{bs} = resistance factor for block shear specified in Article 6.5.4.2

The gross area shall be determined as the length of the plane multiplied by the thickness of the component. The net area shall be the gross area, minus the number of whole or fractional holes in the plane, multiplied by the nominal hole diameter specified in Table 6.13.2.4.2-1 times the thickness of the component.

In determining the net section of cuts carrying tension stress, the effect of staggered holes adjacent to the cuts shall be determined in accordance with Article 6.8.3. For net sections carrying shear stress, the full effective diameter of holes centered within two diameters of the cut shall be deducted. Holes further removed may be disregarded.

6.14.2.8.6—Chord Splices

Gusset plates that splice two chord sections together shall be checked using a section analysis considering the relative eccentricities between all plates crossing the splice and the loads on the spliced plane.

For compression chord splices, the factored compressive resistance, P_r, of the spliced section shall be taken as:

$$P_r = \phi_{cs} F_{cr} \left(\frac{S_g A_g}{S_g + e_p A_g} \right) \qquad (6.14.2.8.6\text{-}1)$$

in which:

F_{cr} = stress in the spliced section at the limit of usable resistance (ksi). F_{cr} shall be taken as the specified minimum yield strength of the gusset plate when the following equation is satisfied:

$$\frac{KL_{splice}\sqrt{12}}{t_g} < 25 \qquad (6.14.2.8.6\text{-}2)$$

where:

ϕ_{cs} = resistance factor for truss gusset plate chord splices specified in Article 6.5.4.2
A_g = gross area of all plates in the cross-section intersecting the spliced plane (in.^{2})
e_p = distance between the centroid of the cross-section and the resultant force perpendicular to the spliced plane (in.)
K = effective column length factor taken as 0.50 for chord splices
L_{splice} = center-to-center distance between the first lines of fasteners in the adjoining chords as shown in Figure 6.14.2.8.6-1 (in.)
S_g = gross section modulus of all plates in the cross-section intersecting the spliced plane (in.^{3})
t_g = gusset plate thickness (in.)

The Whitmore section check specified in Article 6.14.2.8.4 is not considered applicable for the design of a compression chord splice.

For tension chord splices, the factored tensile resistance, P_r, shall be taken as the lesser of the values given by Eqs. 6.14.2.8.6-3 and 6.14.2.8.6-4.

$$P_r = \phi_{cs} F_y \left(\frac{S_g A_g}{S_g + e_p A_g} \right) \qquad (6.14.2.8.6\text{-}3)$$

$$P_r = \phi_{cs} F_u \left(\frac{S_n A_n}{S_n + e_p A_n} \right) \qquad (6.14.2.8.6\text{-}4)$$

where:

ϕ_{cs} = resistance factor for truss gusset plate chord splices specified in Article 6.5.4.2
A_g = gross area of all plates in the cross-section intersecting the spliced plane (in.^{2})
A_n = net area of all plates in the cross-section intersecting the spliced plane (in.^{2})
e_p = distance between the centroid of the cross-section and the resultant force perpendicular to the spliced plane (in.)
F_y = specified minimum yield strength of the gusset plate (ksi)
F_u = specified minimum tensile strength of the gusset plate (ksi)
S_g = gross section modulus of all plates in the cross-section intersecting the spliced plane (in.^{3})
S_n = net section modulus of all plates in the cross-section intersecting the spliced plane (in.^{3})

Tension chord splice members shall also be checked for block shear rupture as specified in Article 6.13.4.

The yielding and net section fracture checks on the Whitmore section specified in Article 6.14.2.8.5 are not considered applicable for the design of a tension chord splice.

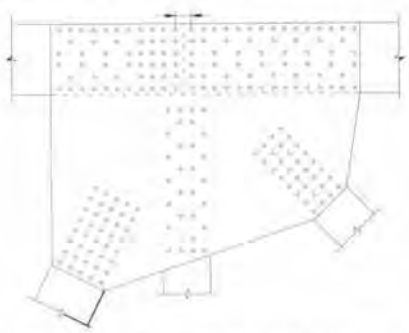

Figure 6.14.2.8.6-1—Example Connection Showing Chord Splice Parameter, L_{splice}

6.13.4—Block Shear Rupture Resistance

The web connection of coped beams and all tension connections, including connection plates, splice plates and gusset plates, shall be investigated to ensure that adequate connection material is provided to develop the factored resistance of the connection.

The connection shall be investigated by considering all possible failure planes in the member and connection plates. Such planes shall include those parallel and perpendicular to the applied forces. The planes parallel to the applied force shall be considered to resist only shear stresses. The planes perpendicular to the applied force shall be considered to resist only tension stresses.

The factored resistance of the combination of parallel and perpendicular planes shall be taken as:

$$R_r = \phi_{bs} R_p (0.58 F_u A_{vn} + U_{bs} F_u A_{tn}) \le \phi_{bs} R_p (0.58 F_y A_{vg} + U_{bs} F_u A_{tn}) \qquad (6.13.4\text{-}1)$$

where:

R_p = reduction factor for holes taken equal to 0.90 for bolt holes punched full size and 1.0 for bolt holes drilled full size or subpunched and reamed to size
A_{vg} = gross area along the plane resisting shear stress (in.^{2})
A_{vn} = net area along the plane resisting shear stress (in.^{2})
U_{bs} = reduction factor for block shear rupture resistance taken equal to 0.50 when the tension stress is non-uniform and 1.0 when the tension stress is uniform
A_{tn} = net area along the plane resisting tension stress (in.^{2})
F_y = specified minimum yield strength of the connected material (ksi)
F_u = specified minimum tensile strength of the connected material specified in Table 6.4.1-1 (ksi)
ϕ_{bs} = resistance factor for block shear specified in Article 6.5.4.2

The gross area shall be determined as the length of the plane multiplied by the thickness of the component. The net area shall be the gross area, minus the number of whole or fractional holes in the plane, multiplied by the nominal hole diameter specified in Table 6.13.2.4.2-1 times the thickness of the component.

In determining the net section of cuts carrying tension stress, the effect of staggered holes adjacent to the cuts shall be determined in accordance with Article 6.8.3. For net sections carrying shear stress, the full effective diameter of holes centered within two diameters of the cut shall be deducted. Holes further removed may be disregarded.

GUSSET PLATE DESIGN: L10, L20

Units: kip, inch

Diagram and forces:

STRI -1226.1 K

STRI 743.2 K

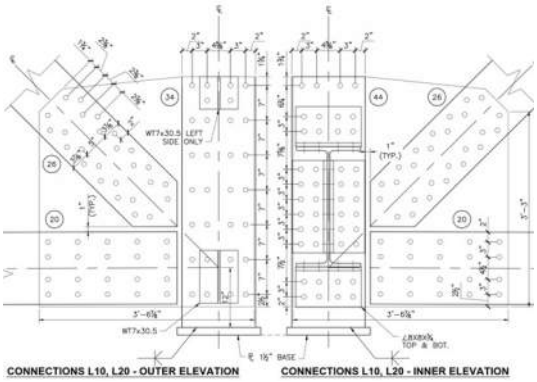

STRI -928.0 K

JOINT	**L10, L20**
gusset thickness	**1.00**
vertical dimension	**40.0**
gusset length	**42.9**
hole diameter	**1.00**
Fy	**50.0**
Fu	**65.0**
gusset weight	0.49

6.14.2.8 Gusset plates

6.7.3 minimum plate thickness 3/8"

6.14.2.8.7 edge slenderness

Lmax unsupportec 49.6 **OK**

6.13.1 minimum connection design forces

See force summary for forces and bolt requirements

6.13.2 bolt detailing requirements

See bolt detailing information

6.13.6.1.5 must reduce bolt strength resistance if fillers > 0.25" thickness

slip critical resistance needs no reduction

most bolt numbers are determined by slip critical resistance

Design forces:

Left side

Chord connection design force	743.2	tension
Diagonal connection design force	-1226.1	compression
diagonal angle off horizontal	**45.0**	
Pu two gussets splice	743.20	horz components
Pu one gusset splice	371.6	
Vu vertical two gussets shear	867.0	
Vu vertical one gusset shear	433.5	
Vu horizontal two gussets shear	867.0	
Vu horizontal one gusset shear	433.5	

Right side

Chord connection design force	0.0	tension
Vertical connection design force	-928.0	ignore compression for Pu
vertical angle off horizontal	**90.0**	
Pu two gussets splice	0.00	horz components
Pu one gusset splice	0.0	
Vu vertical two gussets shear	928.0	
Vu vertical one gusset shear	464.0	

Strength check of failure modes: L10, L20

6.14.2.8.3 shear on gusset plates
6.14.2.8.3-1 shear yielding
6.13.5.3-2 shear rupture
6.14.2.8.3-1 shear yielding partial planes compr members only

6.14.2.8.3-1 shear yielding on gross section, one gusset

omega	0.88		
phi cy	0.80		
gusset depth	40.00		
gusset length	42.88		
gusset thickness	1.00		
Fy	50.00		
Vertical shear:			
Avg v	40.00		
Vr v	816.6		
Vu v	464.0		
Vr>Vu?	**OK**	0.57	Load/Resistance
Horizontal shear:			
Avg h	42.88		
Vr h	875.3		
Vu h	433.5		
Vr>Vu?	**OK**	0.50	

6.13.5.3-2 shear rupture on net section, one gusset

number of holes in vertical shear plane		**11**
number of holes in horizontal shear plane		**9**
Fu	65.00	
Vertical shear:		
Avn v	29.00	
Vr v	874.6	
Vu v	464.0	
Vr>Vu?	**OK**	0.53
Horizontal shear:		
Avn h	33.88	
Vr h	1021.7	
Vu h	433.5	
Vr>Vu?	**OK**	0.42

6.14.2.8.3-1 shear yielding partial planes compression members only

diagonal member compression	-1226.1		
diagonal angle off horizontal	45.0		
gusset thickness	1.00		
phi cy	0.80		
omega	0.88		
Fy	50.0		
Horizontal shear:			
horizontal shear length	**28.9**		
Vr h	589.5		
horizontal shear force	867.0	two gussets	
horizontal shear force, Vu h	433.5	one gusset	
Vr>Vu?	**OK**		0.74
Vertical shear:			
vertical shear length	**30.8**		
Vr h	627.8		
vertical shear force	867.0	two gussets	
vertical shear force, Vu v	433.5	one gusset	
Vr>Vu?	**OK**		0.69

6.14.2.8.4 compressive resistance on gusset whitmore section
compression diagonal L10, L20

Lmid	**4.0**	
bolt pattern length	**28.5**	
bolt pattern width	**5.0**	
diagonal member compresion Pu =	-1226.1	two gussets
phi cg	0.75	
tg	1.00	
Width of Whitmore section	37.9	
Ag	37.9	
Lmid/tg	4.0	

$Pr/Ag = -4.93E-07x^4 + 0.000159x^3 - 0.0153x^2 + 0.1119x + 37.179$

Pr/Ag =	37.4	
Pr = phi Pn =	1416.7	
Pu	613.1	one gusset
Pr>Pu?	**OK**	0.43

6.14.2.8.5 tensile resistance of gusset
6.8.2.1-1 yielding on Ag whitmore
6.8.2.1-2 fracture on U*An<0.85Ag whitmore
6.13.5.2 block shear rupture
6.13.4 block shear rupture
6.13.4-1 block shear rupture

6.8.2.1-1 yielding on Ag whitmore
6.8.2.1-2 fracture on U*An<0.85Ag whitmore

Tension diagonal, forces on Whitmore section:

bolt pattern length	**22.0**	
bolt pattern width	**6.5**	
number of widthwise holes	**2.0**	
diameter of holes	**1**	
member tension Pu =	0.0	two gussets
member tension Pu =	0.0	one gusset
phi y	0.95	
phi u	0.80	
Fy	50.00	
Fu	65.00	
tg	1.00	
Width of Whitmore section	31.9	
Ag	31.9	
An	29.9	
0.85*Ag	27.1	

phi y * Pny yielding	1514.7	one gusset 6.8.2.1-1
phi u * Pnu fracture	1409.4	one gusset 6.8.2.1-2
Pu	0.0	
Pr>Pu?	**OK**	0.00

6.13.5.2 block shear rupture
6.13.4 block shear rupture
6.13.4-1 block shear rupture

phi bs	0.80
Fy	50.00
Fu	65.00
tg	1.00

at tension diagonal: 6.13.4-1

bolt hole dia	1.00	
shear holes	**12.0**	
shear sides	**2**	
tension width	**5.0**	
tension holes	**2**	
shear length	**30.3**	
member tension Pu =	0.0	two gussets
member tension Pu =	0.0	one gusset
Avn	36.50	
Atn	4.00	
Avg	60.50	
Rr1	1308.8	on net
Rr2	1611.6	on gross
Rr use	1308.8	min
Pu	0.0	
Rr>Pu?	**OK**	0.00

at left tension chord: 6.13.4-1

bolt hole dia	1.00	
shear length	**25.0**	
shear holes	**5**	
shear sides	**1**	
tension width	**11.0**	
tension holes	**4**	
member tension Pu =	743.2	two gussets
member tension Pu =	371.6	one gusset
Avn	20.00	
Atn	8.00	
Avg	25.00	
Rr1	1019.2	gross
Rr2	996.0	net
Rr use	996.0	min
Pu	371.6	
Rr>Pu?	**OK**	0.37

at right tension chord: 6.13.4-1

bolt hole dia	1.00	
shear length	**25.0**	
shear holes	**5**	
shear sides	**1**	
tension width	**11.0**	
tension holes	**4**	
member tension Pu =	0.0	two gussets
member tension Pu =	0.0	one gusset
Avn	20.00	
Atn	8.00	
Avg	25.00	
Rr1	1019.2	gross
Rr2	996.0	net
Rr use	996.0	min
Pu	0.0	
Rr>Pu?	**OK**	0.00

GUSSET PLATE DESIGN: L12

Units: kip, inch

Diagram and Design forces:

STRI	602.0 K		STRI	-390.0 K
STRI	744.0 K		STRI	962.0 K

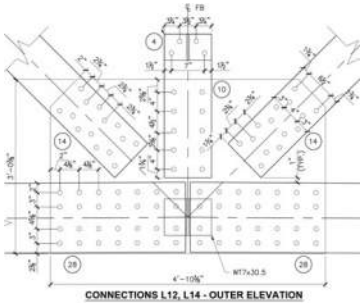

JOINT	**L12**	6.14.2.8	Gusset plates		
gusset thickness	**1.250**		6.7.3	minimum plate thickness	3/8"
vertical dimension	**36.4**		6.14.2.8.7	edge slenderness	
gusset length	**58.0**			Lmax unsupported	62.0 **OK**
hole diameter	**1.00**				
Fy	**50.0**		6.13.1	minimum connection design forces	
Fu	**65.0**			See force summary for forces and bolt requirements	
gusset weight	0.75		6.13.2	bolt detailing requirements	
				See bolt detailing information	
			6.13.6.1.5	must reduce bolt strength resistance if fillers > 0.25" thickness	
				slip critical resistance needs no reduction	
				most bolt numbers are determined by slip critical resistance	

Design forces:

Left side			Right side		
Chord connection design force	744.0	tension	Chord connection design force	962.0	tension
Diagonal connection design force	602.0	tension	Diagonal connection design force	-390.0	ignore compression for Pu
diagonal angle off horizontal	**45.0**		diagonal angle off horizontal	**45.0**	
Pu two gussets splice	1169.68	horz components	Pu two gussets splice	962.00	horz components
Pu one gusset splice	584.8		Pu one gusset splice	481.0	
Vu vertical two gussets shear	425.7		Vu vertical two gussets shear	275.8	
Vu vertical one gusset shear	212.8		Vu vertical one gusset shear	137.9	
Vu horizontal two gussets shear	701.4				
Vu horizontal one gusset shear	350.7				

6.14.2.8.3 shear on gusset plates
- 6.14.2.8.3-1 shear yielding
- 6.13.5.3-2 shear rupture
- 6.14.2.8.3-1 shear yielding partial planes compr members only

6.14.2.8.3-1 shear yielding on gross section, one gusset

omega	0.88		
phi cy	0.80		
gusset depth	36.38		
gusset length	58.00		
gusset thickness	1.25		
Fy	50.00		
Vertical shear:			
Avg v	45.47		
Vr v	928.3		
Vu v	212.8		
Vr>Vu?	**OK**	0.23	Load/Resistance
Horizontal shear:			
Avg h	72.50		
Vr h	1480.2		
Vu h	350.7		
Vr>Vu?	**OK**	0.24	

6.13.5.3-2 shear rupture on net section, one gusset

number of holes in vertical shear plane		**9**
number of holes in horizontal shear plane		**14**
Fu	65.00	
Vertical shear:		
Avn v	34.22	
Vr v	1032.0	
Vu v	212.8	
Vr>Vu?	**OK**	0.21
Horizontal shear:		
Avn h	55.00	
Vr h	1658.8	
Vu h	350.7	
Vr>Vu?	**OK**	0.21

6.14.2.8.3-1 shear yielding partial planes compression members only

diagonal member compression	-390.0		
diagonal angle off horizontal	45.0		
gusset thickness	1.25		
phi cy	0.80		
omega	0.88		
Fy	50.0		
Horizontal shear:			
horizontal shear length	**22.6**		
Vr h	577.4		
horizontal shear force	275.8	two gussets	
horizontal shear force, Vu h	137.9	one gusset	
Vr>Vu?	**OK**	0.24	
Vertical shear:			
vertical shear length	**22.0**		
Vr h	561.4		
vertical shear force	275.8	two gussets	
vertical shear force, Vu v	137.9	one gusset	
Vr>Vu?	**OK**	0.25	

6.14.2.8.4 compressive resistance on gusset whitmore section
compression diagonal

L12

Lmid	**9.0**	
bolt pattern length	**16.5**	
bolt pattern width	**6.5**	
diagonal member compresion Pu =	-390.0	two gussets
phi cg	0.75	
tg	1.25	
Width of Whitmore section	25.5	
Ag	31.9	
Lmid/tg	7.2	

$Pr/Ag = -4.93E\text{-}07x^4 + 0.000159x^3 - 0.0153x^2 + 0.1119x + 37.179$

Pr/Ag =	37.2	
Pr = phi Pn =	1189.2	
Pu	195.0	one gusset
Pr>Pu?	**OK**	0.16

6.14.2.8.5 tensile resistance of gusset

6.8.2.1-1 yielding on Ag whitmore
6.8.2.1-2 fracture on U*An<0.85Ag whitmore
6.13.5.2 block shear rupture
6.13.4 block shear rupture
6.13.4-1 block shear rupture

6.8.2.1-1 yielding on Ag whitmore
6.8.2.1-2 fracture on U*An<0.85Ag whitmore

Tension diagonal, forces on Whitmore section:

bolt pattern length	**16.5**	
bolt pattern width	**6.5**	
number of widthwise holes	**2.0**	
diameter of holes	**1**	
member tension Pu =	602.0	two gussets
member tension Pu =	301.0	one gusset
phi y	0.95	
phi u	0.80	
Fy	50.00	
Fu	65.00	
tg	1.25	
Width of Whitmore section	25.5	
Ag	31.9	
An	29.4	
0.85*Ag	27.1	
phi y * Pny yielding	1516.5	one gusset 6.8.2.1-1
phi u * Pnu fracture	1411.1	one gusset 6.8.2.1-2
Pu	301.0	
Pr>Pu?	**OK**	0.21

6.13.5.2 block shear rupture
6.13.4 block shear rupture
6.13.4-1 block shear rupture

phi bs	0.80
Fy	50.00
Fu	65.00
tg	1.25

at tension diagonal: 6.13.4-1

bolt hole dia	**1.0**	
shear holes	**7.0**	
shear sides	**2**	
tension width	**6.5**	
tension holes	**2**	
shear length	**15.5**	
member tension Pu =	602.0	two gussets
member tension Pu =	301.0	one gusset
Avn	21.25	
Atn	6.88	
Avg	38.75	
Rr1	998.4	on net
Rr2	1256.5	on gross
Rr use	998.4	min
Pu	301.0	
Rr>Pu?	**OK**	0.30

at left tension chord: 6.13.4-1

bolt hole dia	**1.0**	
shear length	**26.8**	
shear holes	**7**	
shear sides	**1**	
tension width	**11.0**	
tension holes	**4**	
member tension Pu =	744.0	two gussets
member tension Pu =	372.0	one gusset
Avn	24.69	
Atn	10.00	
Avg	33.44	
Rr1	1264.6	gross
Rr2	1295.8	net
Rr use	1264.6	min
Pu	372.0	
Rr>Pu?	**OK**	0.29

L12

at right tension chord: 6.13.4-1

bolt hole dia	**1.0**	
shear length	**26.8**	
shear holes	**7**	
shear sides	**1**	
tension width	**11.0**	
tension holes	**4**	
member tension Pu =	962.0	two gussets
member tension Pu =	481.0	one gusset
Avn	24.69	
Atn	10.00	
Avg	33.44	
Rr1	1264.6	gross
Rr2	1295.8	net
Rr use	1264.6	min
Pu	481.0	
Rr>Pu?	**OK**	0.38

6.14.2.8.6 CHORD SPLICES

JOINT L12

Pu one gusset USE 481.0

phi cs	0.65	OPTION:
Fy	50.00	no web plates
Fu	65.00	no flange plates
hole diameter	1.00	USE TO AVOID THE ADDED GALVANIZING, LABOR, AND PIECES

	x dim	ydim	y from bot	Ag	Ay	Ayy	Io	holes	pitch	Aholes	Iholes	Ae	Ay	Ayy	Io
gusset plate	1.250	36.38	18.19	45.5	827.0	15040.4	5013.5	**9**	4.04	-11.25	-1225.1	34.2	622.4	11319.1	3788.3
flange plate 1	**0.00**	**0.00**	14.50	0.0	0.0	0.0	0.0	**1**		0.00		0.0	0.0	0.0	
flange plate 2	**0.00**	**0.00**	0.00	0.0	0.0	0.0	0.0	**1**		0.00		0.0	0.0	0.0	
web plate 1	**0.00**	**0.00**	7.50	0.0	0.0	0.0	0.0	**1**		0.00		0.0	0.0	0.0	
web plate 2	**0.00**	**0.00**	7.00	0.0	0.0	0.0	0.0	**1**		0.00		0.0	0.0	0.0	
W section flange		**14.50**													
W section web		**0.50**													
				45.5	827.0	15040.4	5013.5					34.2	622.4	11319.1	3788.3

Ag	45.5		
ybar	18.2		
e Wsection	10.9		
Ig	5013.5		
Sgbot	275.7		
Pu/A	10.6		
Pu*e/Sbot	19.1		
sum	29.7	ksi demand	
phics*Fy	32.5	ksi on gross section	
sum <? Phics*Fy	**OK**	0.91	Load/Resistance

An	34.2		
ybar	18.2		
e Wsection	10.9		
In	3788.3		
Snbot	208.3		
Pu/A	14.1		
Pu*e/Sbot	25.3		
sum	39.3	ksi demand	
phics*Fu	42.3	ksi on net section	
sum <? Phics*Fu	**OK**	0.93	Load/Resistance

GUSSET PLATE DESIGN: L14

Units: kip, inch

Diagram and Design forces:

STRI	602.0 K		STRI	-390.0 K
STRI	962.0 K		STRI	962.0 K

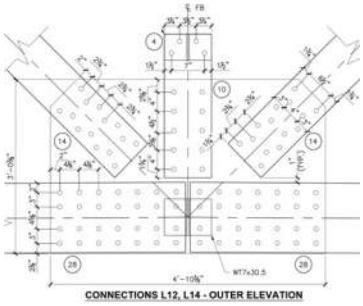

JOINT	**L14**	6.14.2.8	Gusset plates		
gusset thickness	**1.25**		6.7.3	minimum plate thickness	3/8"
vertical dimension	**36.4**		6.14.2.8.7	edge slenderness	
gusset length	**58.0**			Lmax unsupported	62.0 **OK** OK
hole diameter	**1.00**				
Fy	**50.0**		6.13.1	minimum connection design forces	
Fu	**65.0**			See force summary for forces and bolt requirements	
gusset weight	0.75		6.13.2	bolt detailing requirements	
				See bolt detailing information	
			6.13.6.1.5	must reduce bolt strength resistance if fillers > 0.25" thickness	
				slip critical resistance needs no reduction	
				most bolt numbers are determined by slip critical resistance	

Design forces:

Left side			Right side		
Chord connection design force	962.0	tension	Chord connection design force	962.0	tension
Diagonal connection design force	602.0	tension	Diagonal connection design force	-390.0	ignore compression for Pu
diagonal angle off horizontal	**45.0**		diagonal angle off horizontal	**45.0**	
Pu two gussets splice	1387.68	horz components	Pu two gussets splice	962.00	horz components
Pu one gusset splice	693.8		Pu one gusset splice	481.0	
Vu vertical two gussets shear	425.7		Vu vertical two gussets shear	275.8	
Vu vertical one gusset shear	212.8		Vu vertical one gusset shear	137.9	
Vu horizontal two gussets shear	701.4				
Vu horizontal one gusset shear	350.7				

Strength check of failure modes:

L14

6.14.2.8.3 shear on gusset plates
6.14.2.8.3-1 shear yielding
6.13.5.3-2 shear rupture
6.14.2.8.3-1 shear yielding partial planes compr members only

6.14.2.8.3-1 shear yielding on gross section, one gusset

omega	0.88		
phi cy	0.80		
gusset depth	36.38		
gusset length	58.00		
gusset thickness	1.25		
Fy	50.00		
Vertical shear:			
Avg v	45.47		
Vr v	928.3		
Vu v	212.8		
Vr>Vu?	**OK**	0.23	Load/Resistance
Horizontal shear:			
Avg h	72.50		
Vr h	1480.2		
Vu h	350.7		
Vr>Vu?	**OK**	0.24	

6.13.5.3-2 shear rupture on net section, one gusset

number of holes in vertical shear plane		**9**
number of holes in horizontal shear plane		**14**
Fu	65.00	
Vertical shear:		
Avn v	34.22	
Vr v	1032.0	
Vu v	212.8	
Vr>Vu?	**OK**	0.21
Horizontal shear:		
Avn h	55.00	
Vr h	1658.8	
Vu h	350.7	
Vr>Vu?	**OK**	0.21

6.14.2.8.3-1 shear yielding partial planes compression members only

diagonal member compression	-390.0		
diagonal angle off horizontal	45.0		
gusset thickness	1.25		
phi cy	0.80		
omega	0.88		
Fy	50.0		
Horizontal shear:			
horizontal shear length	**22.6**		
Vr h	577.4		
horizontal shear force	275.8	two gussets	
horizontal shear force, Vu h	137.9	one gusset	
Vr>Vu?	**OK**	0.24	
Vertical shear:			
vertical shear length	**22.0**		
Vr h	561.4		
vertical shear force	275.8	two gussets	
vertical shear force, Vu v	137.9	one gusset	
Vr>Vu?	**OK**	0.25	

6.14.2.8.4 compressive resistance on gusset whitmore section
compression diagonal

L14

Lmid	**9.0**	
bolt pattern length	**16.5**	
bolt pattern width	**6.5**	
diagonal member compresion Pu =	-390.0	two gussets
phi cg	0.75	
tg	1.25	
Width of Whitmore section	25.5	
Ag	31.9	
Lmid/tg	7.2	

$Pr/Ag = -4.93E\text{-}07x^4 + 0.000159x^3 - 0.0153x^2 + 0.1119x + 37.179$

Pr/Ag =	37.2	
Pr = phi Pn =	1189.2	
Pu	195.0	one gusset
Pr>Pu?	**OK**	0.16

6.14.2.8.5 tensile resistance of gusset

6.8.2.1-1 yielding on Ag whitmore
6.8.2.1-2 fracture on U*An<0.85Ag whitmore
6.13.5.2 block shear rupture
6.13.4 block shear rupture
6.13.4-1 block shear rupture

6.8.2.1-1 yielding on Ag whitmore
6.8.2.1-2 fracture on U*An<0.85Ag whitmore

Tension diagonal, forces on Whitmore section:

bolt pattern length	**16.5**	
bolt pattern width	**6.5**	
number of widthwise holes	**2.0**	
diameter of holes	**1**	
member tension Pu =	602.0	two gussets
member tension Pu =	301.0	one gusset
phi y	0.95	
phi u	0.80	
Fy	50.00	
Fu	65.00	
tg	1.25	
Width of Whitmore section	25.5	
Ag	31.9	
An	29.4	
0.85*Ag	27.1	
phi y * Pny yielding	1516.5	one gusset 6.8.2.1-1
phi u * Pnu fracture	1411.1	one gusset 6.8.2.1-2
Pu	301.0	
Pr>Pu?	**OK**	0.21

6.13.5.2 block shear rupture
6.13.4 block shear rupture
6.13.4-1 block shear rupture

phi bs	0.80
Fy	50.00
Fu	65.00
tg	1.25

at tension diagonal: 6.13.4-1

bolt hole dia	**1.0**	
shear holes	**7.0**	
shear sides	**2**	
tension width	**6.5**	
tension holes	**2**	
shear length	**15.5**	
member tension Pu =	602.0	two gussets
member tension Pu =	301.0	one gusset
Avn	21.25	
Atn	6.88	
Avg	38.75	
Rr1	998.4	on net
Rr2	1256.5	on gross
Rr use	998.4	min
Pu	301.0	
Rr>Pu?	**OK**	0.30

at left tension chord: 6.13.4-1

L14

bolt hole dia	1.0	
shear length	26.8	
shear holes	7	
shear sides	1	
tension width	11.0	
tension holes	4	
member tension Pu =	962.0	two gussets
member tension Pu =	481.0	one gusset
Avn	24.69	
Atn	10.00	
Avg	33.44	
Rr1	1264.6	gross
Rr2	1295.8	net
Rr use	1264.6	min
Pu	481.0	
Rr>Pu?	**OK**	0.38

at right tension chord: 6.13.4-1

bolt hole dia	1.0	
shear length	26.8	
shear holes	7	
shear sides	1	
tension width	11.0	
tension holes	4	
member tension Pu =	962.0	two gussets
member tension Pu =	481.0	one gusset
Avn	24.69	
Atn	10.00	
Avg	33.44	
Rr1	1264.6	gross
Rr2	1295.8	net
Rr use	1264.6	min
Pu	481.0	
Rr>Pu?	**OK**	0.38

6.14.2.8.6 CHORD SPLICES

JOINT L14

Pu one gusset USE	481.0	
phi cs	0.65	OPTION:
Fy	50.00	no web plates
Fu	65.00	no flange plates
hole diameter	1.00	USE TO AVOID THE ADDED GALVANIZING, LABOR, AND PIECES

	x dim	ydim	y from bot	Ag	Ay	Ayy	Io	holes	pitch	Aholes	Iholes	Ae	Ay	Ayy	Io
gusset plate	1.250	36.38	18.19	45.5	827.0	15040.4	5013.5	9	4.04	-11.25	-1225.1	34.2	622.4	11319.1	3788.3
flange plate 1	0.00	0.00	14.50	0.0	0.0	0.0	0.0	1		0.00		0.0	0.0	0.0	
flange plate 2	0.00	0.00	0.00	0.0	0.0	0.0	0.0	1		0.00		0.0	0.0	0.0	
web plate 1	0.00	0.00	7.50	0.0	0.0	0.0	0.0	1		0.00		0.0	0.0	0.0	
web plate 2	0.00	0.00	7.00	0.0	0.0	0.0	0.0	1		0.00		0.0	0.0	0.0	
W section flange		14.50													
W section web		0.50													
				45.5	827.0	15040.4	5013.5					34.2	622.4	11319.1	3788.3

Ag	45.5	
ybar	18.2	
e Wsection	10.9	
Ig	5013.5	
Sgbot	275.7	
Pu/A	10.6	
Pu*e/Sbot	19.1	
sum	29.7	ksi demand
phics*Fy	32.5	ksi on gross section
sum <? Phics*Fy	**OK**	0.91 Load/Resistance

An	34.2	
ybar	18.2	
e Wsection	10.9	
In	3788.3	
Snbot	208.3	
Pu/A	14.1	
Pu*e/Sbot	25.3	
sum	39.3	ksi demand
phics*Fu	42.3	ksi on net section
sum <? Phics*Fu	**OK**	0.93 Load/Resistance

GUSSET PLATE DESIGN: U11, U21

Units: kip, inch

Diagram and forces:

STRI -1184.0 K

STRI -1348.0 K

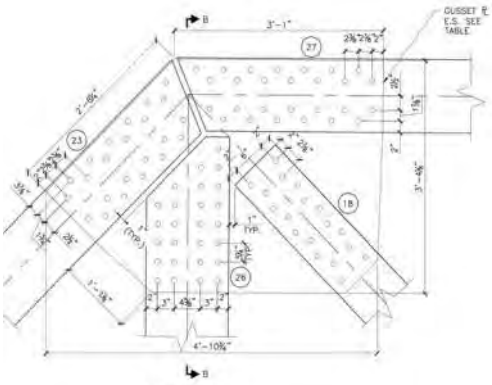

JOINTS U11, U21

STRI 669.0 K

JOINT	**U11, U21**
gusset thickness	**1.25**
vertical dimension	**40.0**
gusset length	**48.0**
hole diameter	**1.00**
Fy	**50.0**
Fu	**65.0**
gusset plate weight	0.68
chord plate thickness	**0.00**
chord plate width	**0.0**
chord plate length	**0.0**
chord plate weight	0.00
gusset + chd plate weight	0.68

6.14.2.8 Gusset plates

6.7.3 minimum plate thickness 3/8"

6.14.2.8.7 edge slenderness

Lmax unsupportec 62.0 **OK** OK

6.13.1 minimum connection design forces

See force summary for forces and bolt requirements

6.13.2 bolt detailing requirements

See bolt detailing information

6.13.6.1.5 must reduce bolt strength resistance if fillers > 0.25" thickness

slip critical resistance needs no reduction

most bolt numbers are determined by slip critical resistance

Design forces:

Left side

Chord connection design force	0.0	compression
Diagonal connection design force	-1348.0	compression
diagonal angle off horizontal	**45.0**	
Pu two gussets splice	-953.2	horz components
Pu one gusset splice	-476.6	
Vu vertical two gussets shear	953.2	
Vu vertical one gusset shear	476.6	
Vu horizontal two gussets shear	1426.2	
Vu horizontal one gusset shear	713.1	

Right side

Chord connection design force	-1184.0	compression
Diagonal connection design force	669.0	ignore tension for Pu
diagonal angle off horizontal	**45.0**	
Pu two gussets splice	-1184.00	horz components
Pu one gusset splice	-592.0	
Vu vertical two gussets shear	473.1	
Vu vertical one gusset shear	236.5	

Strength check of failure modes:

U11, U21

6.14.2.8.3 shear on gusset plates
6.14.2.8.3-1 shear yielding
6.13.5.3-2 shear rupture
6.14.2.8.3-1 shear yielding partial planes compr members only

6.14.2.8.3-1 shear yielding on gross section, one gusset

omega	0.88		
phi vy	0.80		
gusset depth	40.00		
gusset length	48.00		
gusset thickness	1.25		
Fy	50.00		
Vertical shear:			
Avg v	50.00		
Vr v	1020.8		
Vu v	476.6		
Vr>Vu?	**OK**	0.47	Load/Resistance
Horizontal shear:			
Avg h	60.00		
Vr h	1225.0		
Vu h	713.1		
Vr>Vu?	**OK**	0.58	

6.13.5.3-2 shear rupture on net section, one gusset

number of holes in vertical shear plane		**12**
number of holes in horizontal shear plane		**24**
Fu	65.00	
Vertical shear:		
Avn v	35.00	
Vr v	1055.6	
Vu v	476.6	
Vr>Vu?	**OK**	0.45
Horizontal shear:		
Avn h	30.00	
Vr h	904.8	
Vu h	713.1	
Vr>Vu?	**OK**	0.79

6.14.2.8.3-1 shear yielding partial planes compression members only

Does not apply to end post diagonal because it is extended to top chord

Does not apply to first interior diagonal, because it is in tension

6.14.2.8.4 compressive resistance on gusset whitmore section
compression diagonal

Does not apply to end post diagonal, check 6.14.2.8.6-2 with splice

6.14.2.8.5 tensile resistance of gusset

6.8.2.1-1 yielding on Ag whitmore
6.8.2.1-2 fracture on U*An<0.85Ag whitmore
6.13.5.2 block shear rupture
6.13.4 block shear rupture
6.13.4-1 block shear rupture

6.8.2.1-1 yielding on Ag whitmore
6.8.2.1-2 fracture on U*An<0.85Ag whitmore

Tension diagonal, forces on Whitmore section:

bolt pattern length	**24.5**	
bolt pattern width	**6.5**	
number of widthwise holes	**2**	
diameter of holes	**1.00**	
member tension Pu =	669.0	two gussets
member tension Pu =	334.5	one gusset
phi y	0.95	
phi u	0.80	
Fy	50.00	
Fu	65.00	
tg	1.25	
Width of Whitmore section	34.8	
Ag	43.5	
An	41.0	
0.85*Ag	36.9	
phi y * Pny yielding	2064.6	one gusset 6.8.2.1-1
phi u * Pnu fracture	1921.2	one gusset 6.8.2.1-2
Pu	334.5	
Pr>Pu?	**OK**	0.17

6.13.5.2 block shear rupture
6.13.4 block shear rupture
6.13.4-1 block shear rupture

phi bs	0.80
Fy	50.00
Fu	65.00
tg	1.25

at tension diagonal: 6.13.4-1

bolt hole dia	**1.0**	
shear holes	**9.0**	
shear sides	**2**	
tension width	**6.5**	
tension holes	**2**	
shear length	**23.0**	
member tension Pu =	669.0	two gussets
member tension Pu =	334.5	one gusset
Avn	35.00	
Atn	6.88	
Avg	57.50	
Rr1	1413.1	on net
Rr2	1691.5	on gross
Rr use	1413.1	min
Pu	334.5	
Rr>Pu?	**OK**	0.24

6.14.2.8.6 CHORD SPLICES

JOINT	U11, U21		
Pu one gusset USE		-476.6	
phi cs		0.65	OPTION:
Fy		50.00	no web plates
Fu		65.00	with flange plates
hole diameter		1.00	USE

	x dim	ydim	y from top	Ag	Ay	Ayy	Io
gusset plate	1.25	40.00	20.00	50.0	1000.0	20000.0	6666.7
flange chord plate 1	0.00	12.00	6.75	0.0	0.0	0.0	0.0
flange chord plate 2	0.00	12.00	6.00	0.0	0.0	0.0	0.0
web chord plate 1	**0.00**	**0.00**	7.00	0.0	0.0	0.0	0.0
web chord plate 2	**0.00**	**0.00**	5.75	0.0	0.0	0.0	0.0
W section flange		**12.75**					
W section web		**1.25**					
				50.0	1000.0	20000.0	6666.7

Ag	50.0	Lsplice	**5.00**	
ybar	20.0	K splice	0.50	6.14.2.8.6-2
e Wsection	13.6	KLsqr12/tg=	6.93	check <?25
			OK	0.28
Ig	6666.7			
Sgtop	333.3			

Pu/A	-9.5	
Pu*e/Stop	-19.5	
sum	-29.0	ksi demand
phics*Fy	32.5	ksi on gross section
sum <? Phics*Fy	**OK**	-0.89

GUSSET PLATE DESIGN: U13

Units: kip, inch

Diagram and forces:

STRI -935.0 K

STRI -390.0 K

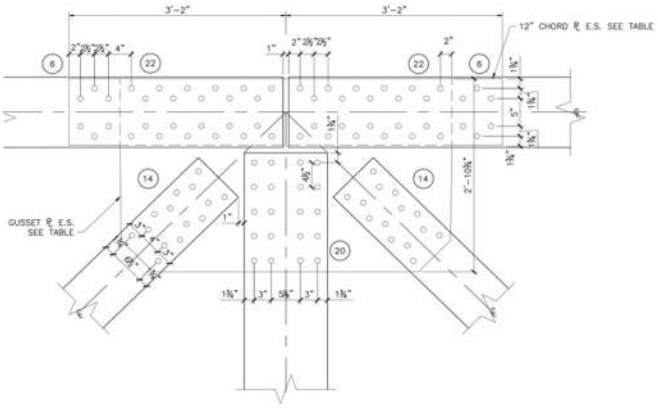

-1050.0 K

602.0 K

CONNECTION U13 - ELEVATION

JOINT	**U13**
gusset thickness	**0.75**
vertical dimension	**34.8**
gusset length	**62.0**
hole diameter	**1.00**
Fy	**50.0**
Fu	**65.0**
gusset weight	0.46
chord plate thickness	**0.75**
chord plate width	**12.0**

6.14.2.8 Gusset plates

6.7.3 minimum plate thickness 3/8"

6.14.2.8.7 edge slenderness

Lmax unsupported 37.2 **CHECK** OK

6.13.1 minimum connection design forces

See force summary for forces and bolt requirements

6.13.2 bolt detailing requirements

See bolt detailing information

6.13.6.1.5 must reduce bolt strength resistance if fillers > 0.25" thickness

slip critical resistance needs no reduction

most bolt numbers are determined by slip critical resistance

Design forces:

Left side

Chord connection design force	-935.0	compression
Diagonal connection design force	-390.0	compression
diagonal angle off horizontal	**45.0**	
Pu two gussets splice	-1210.8	horz components
Pu one gusset splice	-605.4	
Vu vertical two gussets shear	275.8	
Vu vertical one gusset shear	137.9	
Vu horizontal two gussets shear	701.4	
Vu horizontal one gusset shear	350.7	

Right side

Chord connection design force	-1050.0	compression
Diagonal connection design force	602.0	ignore tension for Pu
diagonal angle off horizontal	**45.0**	
Pu two gussets splice	-1050.00	horz components
Pu one gusset splice	-525.0	
Vu vertical two gussets shear	425.7	
Vu vertical one gusset shear	212.8	

Strength check of failure modes:

U13

6.14.2.8.3 shear on gusset plates

6.14.2.8.3-1 shear yielding
6.13.5.3-2 shear rupture
6.14.2.8.3-1 shear yielding partial planes compr members only

6.14.2.8.3-1 shear yielding on gross section, one gusset

omega	0.88		
phi vy	0.80		
gusset depth	34.75		
gusset length	62.00		
gusset thickness	0.75		
Fy	50.00		
Vertical shear:			
Avg v	26.06		
Vr v	532.1		
Vu v	212.8		
Vr>Vu?	**OK**	0.40	Load/Resistance
Horizontal shear:			
Avg h	46.50		
Vr h	949.3		
Vu h	350.7		
Vr>Vu?	**OK**	0.37	

6.13.5.3-2 shear rupture on net section, one gusset

number of holes in vertical shear plane		**7**
number of holes in horizontal shear plane		**25**
Fu	65.00	
Vertical shear:		
Avn v	20.81	
Vr v	627.7	
Vu v	212.8	
Vr>Vu?	**OK**	0.34
Horizontal shear:		
Avn h	27.75	
Vr h	836.9	
Vu h	350.7	
Vr>Vu?	**OK**	0.42

6.14.2.8.3-1 shear yielding partial planes compression members only

diagonal member compression	-390.0		
diagonal angle off horizontal	45.0		
gusset thickness	0.75		
phi vy	0.80		
omega	0.88		
Fy	50.0		
Horizontal shear:			
horizontal shear length	**21.5**		
Vr h	329.2		
horizontal shear force	275.8	two gussets	
horizontal shear force, Vu h	137.9	one gusset	
Vr>Vu?	**OK**	0.42	
Vertical shear:			
vertical shear length	**21.5**		
Vr h	329.2		
vertical shear force	275.8	two gussets	
vertical shear force, Vu v	137.9	one gusset	
Vr>Vu?	**OK**	0.42	

6.14.2.8.4 compressive resistance on gusset whitmore section
compression diagonal

U13

Lmid	**9.0**	
bolt pattern length	**16.5**	
bolt pattern width	**6.5**	
diagonal member compresion Pu =	-390.0	two gussets
phi cg	0.75	
tg	0.75	
Width of Whitmore section	25.5	
Ag	19.2	
Lmid/tg	12.0	

$Pr/Ag = -4.93E\text{-}07x^4 + 0.000159x^3 - 0.0153x^2 + 0.1119x + 37.179$

Pr/Ag =	36.6		
Pr = phi Pn =	700.8		
Pu	195.0	one gusset	
Pr>Pu?	**OK**		0.28

6.14.2.8.5 tensile resistance of gusset

6.8.2.1-1 yielding on Ag whitmore
6.8.2.1-2 fracture on U*An<0.85Ag whitmore
6.13.5.2 block shear rupture
6.13.4 block shear rupture
6.13.4-1 block shear rupture

6.8.2.1-1 yielding on Ag whitmore
6.8.2.1-2 fracture on U*An<0.85Ag whitmore

Tension diagonal, forces on Whitmore section:

bolt pattern length	**16.5**	
bolt pattern width	**6.5**	
number of widthwise holes	**2**	
diameter of holes	**1.00**	
member tension Pu =	602.0	two gussets
member tension Pu =	301.0	one gusset
phi y	0.95	
phi u	0.80	
Fy	50.00	
Fu	65.00	
tg	0.75	
Width of Whitmore section	25.5	
Ag	19.2	
An	17.7	
0.85*Ag	16.3	

phi y * Pny yielding	909.9	one gusset 6.8.2.1-1	
phi u * Pnu fracture	846.7	one gusset 6.8.2.1-2	
Pu	301.0		
Pr>Pu?	**OK**		0.36

6.13.5.2 block shear rupture
6.13.4 block shear rupture
6.13.4-1 block shear rupture U13

phi bs	0.80
Fy	50.00
Fu	65.00
tg	0.75

at tension diagonal: 6.13.4-1

bolt hole dia	**1.0**	
shear holes	**7.0**	
shear sides	**2**	
tension width	**6.5**	
tension holes	**2**	
shear length	**18.3**	
member tension Pu =	602.0	two gussets
member tension Pu =	301.0	one gusset
Avn	16.88	
Atn	4.13	
Avg	27.38	
Rr1	723.5	on net
Rr2	849.6	on gross
Rr use	723.5	min
Pu	301.0	
Rr>Pu?	**OK**	0.42

6.14.2.8.4 compressive resistance
left chord plate

Number of bolts	**6.0**	
bolt shear STRI	**27.0**	
chord plate compression force demand	162.0	one chord plate
Fy	50.00	
phi c	**0.95**	
t chord plate	0.75	
Width of chord plate	12.00	
Ag chord plate	9.0	
chord plate compr resistance phi c Pn	427.5	
phi c Pn>Pu?	**OK**	0.38

6.14.2.8.4 compressive resistance
right chord plate

Number of bolts	**6.0**	
bolt shear STRI	**27.0**	
chord plate compression force demand	162.0	one chord plate
Fy	50.00	
phi c	**0.95**	
t chord plate	0.75	
Width of chord plate	12.00	
Ag chord plate	9.0	
chord plate compr resistance phi c Pn	427.5	
phi c Pn>Pu?	**OK**	0.38

6.14.2.8.6 CHORD SPLICES

U13

JOINT U13

Pu one gusset USE	-525.0		
phi cs	0.65		OPTION:
Fy	50.00		no web plates
Fu	65.00		with flange plates
hole diameter	1.00		USE

	x dim	ydim	y from top	Ag	Ay	Ayy	Io
gusset plate	0.75	34.75	17.38	26.1	452.8	7868.0	2622.7
flange chord plate 1	0.75	12.00	6.75	9.0	60.8	410.1	108.0
flange chord plate 2	0.75	12.00	6.00	9.0	54.0	324.0	108.0
web chord plate 1	**0.00**	**0.00**	7.00	0.0	0.0	0.0	0.0
web chord plate 2	**0.00**	**0.00**	5.75	0.0	0.0	0.0	0.0
W section flange		**12.75**					
W section web		**1.25**					
				44.1	567.6	8602.1	2838.7

Ag	44.1	Lsplice	**5.00**	
ybar	12.9	K splice	0.50	
e Wsection	6.5	KLsqr12/tg=	11.55	check <?25
			OK	0.46
Ig	4129.5			
Sgtop	320.6			

Pu/A	-11.9	
Pu*e/Stop	-10.7	
sum	-22.6	ksi demand
phics*Fy	32.5	ksi on gross section
sum <? Phics*Fy	**OK**	-0.69

GUSSET PLATE DESIGN: L22

Units: kip, inch

Diagram and forces:

STRI 669.0 K

STRI 791.0 K

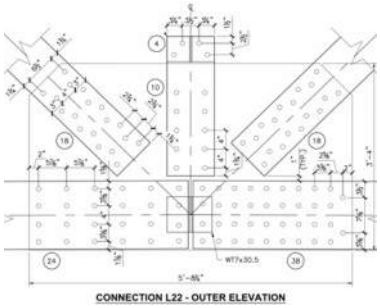

STRI -510.6 K

STRI 1257.0 K

JOINT	**L22**	6.14.2.8	Gusset plates			
gusset thickness	**1.50**		6.7.3	minimum plate thickness	3/8"	
vertical dimension	**40.0**		6.14.2.8.7	edge slenderness		
gusset length	**68.0**			Lmax unsupported	74.4	**OK**
hole diameter	**1.00**					
Fy	**50.0**		6.13.1	minimum connection design forces		
Fu	**65.0**			See force summary for forces and bolt requirements		
gusset weight	1.16		6.13.2	bolt detailing requirements		
				See bolt detailing information		
			6.13.6.1.5	must reduce bolt strength resistance if fillers > 0.25" thickness		
				slip critical resistance needs no reduction		
				most bolt numbers are determined by slip critical resistance		

Design forces:

Left side

Chord connection design force	791.0	tension
Diagonal connection design force	669.0	tension
diagonal angle off horizontal	**45.0**	
Pu two gussets splice	1264.05	horz components
Pu one gusset splice	632.0	
Vu vertical two gussets shear	473.1	
Vu vertical one gusset shear	236.5	
Vu horizontal two gussets shear	834.1	
Vu horizontal one gusset shear	417.1	

Right side

Chord connection design force	1257.0	tension
Diagonal connection design force	-510.6	ignore compression for Pu
diagonal angle off horizontal	**45.0**	
Pu two gussets splice	1257.00	horz components
Pu one gusset splice	628.5	
Vu vertical two gussets shear	361.0	
Vu vertical one gusset shear	180.5	

Strength check of failure modes:

L22

6.14.2.8.3 shear on gusset plates
6.14.2.8.3- shear yielding
6.13.5.3-2 shear rupture
6.14.2.8.3- shear yielding partial planes compr members only

6.14.2.8.3- shear yielding on gross section, one gusset

omega	0.88		
phi cy	0.80		
gusset depth	40.00		
gusset length	68.00		
gusset thickness	1.50		
Fy	50.00		
Vertical shear:			
Avg v	60.00		
Vr v	1225.0		
Vu v	236.5		
Vr>Vu?	**OK**	0.19	Load/Resistance
Horizontal shear:			
Avg h	102.00		
Vr h	2082.4		
Vu h	417.1		
Vr>Vu?	**OK**	0.20	

6.13.5.3-2 shear rupture on net section, one gusset

number of holes in vertical shear plane		**9**
number of holes in horizontal shear plane		**16**
Fu	65.00	
Vertical shear:		
Avn v	46.50	
Vr v	1402.4	
Vu v	236.5	
Vr>Vu?	**OK**	0.17
Horizontal shear:		
Avn h	78.00	
Vr h	2352.5	
Vu h	417.1	
Vr>Vu?	**OK**	0.18

6.14.2.8.3- shear yielding partial planes compression members only

diagonal member compression	-510.6	
diagonal angle off horizontal	45.0	
gusset thickness	1.50	
phi cy	0.80	
omega	0.88	
Fy	50.0	
Horizontal shear:		
horizontal shear length	**29.0**	
Vr h	888.1	
horizontal shear force	361.0	two gussets
horizontal shear force, Vu h	180.5	one gusset
Vr>Vu?	**OK**	0.20
Vertical shear:		
vertical shear length	**26.0**	
Vr h	796.2	
vertical shear force	361.0	two gussets
vertical shear force, Vu v	180.5	one gusset
Vr>Vu?	**OK**	0.23

6.14.2.8.4 compressive resistance on gusset whitmore section
compression diagonal

L22

Lmid	**9.0**	
bolt pattern length	**22.0**	
bolt pattern width	**6.5**	
diagonal member compresion Pu =	-510.6	two gussets
phi cg	0.75	
tg	1.50	
Width of Whitmore section	31.9	
Ag	47.8	
Lmid/tg	6.0	

$Pr/Ag = -4.93E-07x^4 + 0.000159x^3 - 0.0153x^2 + 0.1119x + 37.179$

Pr/Ag =	37.3	
Pr = phi Pn =	1785.7	
Pu	255.3	one gusset
Pr>Pu?	**OK**	0.14

6.14.2.8.5 tensile resistance of gusset
6.8.2.1-1 yielding on Ag whitmore
6.8.2.1-2 fracture on U*An<0.85Ag whitmore
6.13.5.2 block shear rupture
6.13.4 block shear rupture
6.13.4-1 block shear rupture

6.8.2.1-1 yielding on Ag whitmore
6.8.2.1-2 fracture on U*An<0.85Ag whitmore

Tension diagonal, forces on Whitmore section:

bolt pattern length	**22.0**		
bolt pattern width	**6.5**		
number of widthwise holes	**2.0**		
diameter of holes	**1**		
member tension Pu =	669.0	two gussets	
member tension Pu =	334.5	one gusset	
phi y	0.95		
phi u	0.80		
Fy	50.00		
Fu	65.00		
tg	1.50		
Width of Whitmore section	31.9		
Ag	47.8		
An	44.8		
0.85*Ag	40.7		
phi y * Pny yielding	2272.0	one gusse	6.8.2.1-1
phi u * Pnu fracture	2114.2	one gusse	6.8.2.1-2
Pu	334.5		
Pr>Pu?	**OK**	0.16	

6.13.5.2 block shear rupture
6.13.4 block shear rupture
6.13.4-1 block shear rupture

phi bs	0.80
Fy	50.00
Fu	65.00
tg	1.50

at tension diagonal: 6.13.4-1

bolt hole dia	**1.0**	
shear holes	**9.0**	
shear sides	**2**	
tension width	**6.5**	
tension holes	**2**	
shear length	**20.0**	
member tension Pu =	669.0	two gussets
member tension Pu =	334.5	one gusset
Avn	33.00	
Atn	8.25	
Avg	60.00	
Rr1	1424.3	on net
Rr2	1821.0	on gross
Rr use	1424.3	min
Pu	334.5	
Rr>Pu?	**OK**	0.23

at left tension chord: 6.13.4-1

L22

bolt hole dia	**1.0**	
shear length	**33.4**	
shear holes	**6**	
shear sides	**1**	
tension width	**11.0**	
tension holes	**4**	
member tension Pu =	791.0	two gussets
member tension Pu =	395.5	one gusset
Avn	41.06	
Atn	12.00	
Avg	50.06	
Rr1	1862.4	gross
Rr2	1785.5	net
Rr use	1785.5	min
Pu	395.5	
Rr>Pu?	**OK**	0.22

at right tension chord: 6.13.4-1

bolt hole dia	**1.0**	
shear length	**33.6**	
shear holes	**10**	
shear sides	**1**	
tension width	**11.0**	
tension holes	**4**	
member tension Pu =	1257.0	two gussets
member tension Pu =	628.5	one gusset
Avn	35.44	
Atn	12.00	
Avg	50.44	
Rr1	1692.8	gross
Rr2	1794.2	net
Rr use	1692.8	min
Pu	628.5	
Rr>Pu?	**OK**	0.37

6.14.2.8.6 CHORD SPLICES

JOINT L22

Pu one gusset USE 628.5

phi cs	0.65	OPTION:
Fy	50.00	no web plates
Fu	65.00	no flange plates
hole diameter	1.00	USE TO AVOID THE ADDED GALVANIZING, LABOR, AND PIECES

	x dim	ydim	y from bot	Ag	Ay	Ayy	Io	holes	pitch	Aholes	Iholes	Ae	Ay	Ayy	Io
gusset plate	1.50	40.00	20.00	60.00	1200.00	24000.00	8000.00	**9**	4.44	-13.50	-1777.8	46.5	930.0	18600.0	6222.2
flange plate 1	**0.00**	**0.00**	14.50	0.00	0.00	0.00	0.00	**1**		0.00		0.0	0.0	0.0	
flange plate 2	**0.00**	**0.00**	0.00	0.00	0.00	0.00	0.00	**1**		0.00		0.0	0.0	0.0	
web plate 1	**0.00**	**0.00**	7.50	0.00	0.00	0.00	0.00	**1**		0.00		0.0	0.0	0.0	
web plate 2	**0.00**	**0.00**	7.00	0.00	0.00	0.00	0.00	**1**		0.00		0.0	0.0	0.0	
W section flange		**14.50**													
W section web		**0.50**													
				60.00	1200.00	24000.00	8000.00					46.5	930.0	18600.0	6222.2

Ag	60.0	An	46.5	
ybar	20.0	ybar	20.0	
e Wsection	12.8	e Wsection	12.8	
Ig	8000.0	In	6222.2	
Sgbot	400.0	Snbot	311.1	
Pu/A	10.5	Pu/A	13.5	
Pu*e/Sbot	20.0	Pu*e/Sbot	25.8	
sum	30.5	sum	39.3	
phics*Fy	32.5 ksi on gross section	phics*Fu	42.3 ksi on net section	
sum <? Phics*Fy	**OK** 0.94	sum <? Phics*Fu	**OK** 0.93	

GUSSET PLATE DESIGN: L24

Units: kip, inch

Diagram and forces:

STRI	669.0	K	STRI	-510.6	K
FATGI	92.00		FATGI	N/A	
STRI	1257.0	K	STRI	1503.3	K
FATGI	158.0		FATGI	175.0	

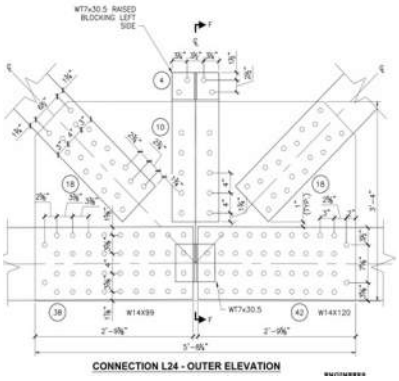

JOINT	**L24**	6.14.2.8	Gusset plates		
gusset thickness	**1.75**	6.7.3	minimum plate thickness	3/8"	
vertical dimension	**40.0**	6.14.2.8.7	edge slenderness		
gusset length	**68.0**		Lmax unsupported	86.8	**OK**
hole diameter	**1.00**				
Fy	**50.0**	6.13.1	minimum connection design forces		
Fu	**65.0**		See force summary for forces and bolt requirements		
gusset weight	1.35	6.13.2	bolt detailing requirements		
			See bolt detailing information		
		6.13.6.1.5	must reduce bolt strength resistance if fillers > 0.25" thickness		
			slip critical resistance needs no reduction		
			most bolt numbers are determined by slip critical resistance		

Design forces:

Left side			Right side		
STRI			STRI		
Chord connection design force	1257.0	tension	Chord connection design force	1503.3	tension
Diagonal connection design force	669.0	tension	Diagonal connection design force	-510.6	ignore compression for Pu
diagonal angle off horizontal	**45.0**		diagonal angle off horizontal	**45.0**	
Pu two gussets splice	1730.05	horz components	Pu two gussets splice	1503.30	horz components
Pu one gusset splice	865.0		Pu one gusset splice	751.7	
Vu vertical two gussets shear	473.1		Vu vertical two gussets shear	361.0	
Vu vertical one gusset shear	236.5		Vu vertical one gusset shear	180.5	
Vu horizontal two gussets shear	834.1				
Vu horizontal one gusset shear	417.1				
FATGI			FATGI		
Chord force	158.0	tension	Chord force	175.0	tension
Diagonal force	92.0	tension	Diagonal force	0.0	ignore compression
Tu two gussets splice	223.05		Tu two gussets splice	175.00	
Tu one gusset splice	111.5		Tu one gusset splice	87.5	

Strength check of failure modes:

L24

6.14.2.8.3 shear on gusset plates
6.14.2.8.3-1 shear yielding
6.13.5.3-2 shear rupture
6.14.2.8.3-1 shear yielding partial planes compr members only

6.14.2.8.3-1 shear yielding on gross section, one gusset

omega	0.88		
phi cy	0.80		
gusset depth	40.00		
gusset length	68.00		
gusset thickness	1.75		
Fy	50.00		
Vertical shear:			
Avg v	70.00		
Vr v	1429.1		
Vu v	236.5		
Vr>Vu?	**OK**	0.17	Load/Resistance
Horizontal shear:			
Avg h	119.00		
Vr h	2429.5		
Vu h	417.1		
Vr>Vu?	**OK**	0.17	

6.13.5.3-2 shear rupture on net section, one gusset

number of holes in vertical shear plane		**9**
number of holes in horizontal shear plane		**21**
Fu	65.00	
Vertical shear:		
Avn v	54.25	
Vr v	1636.2	
Vu v	236.5	
Vr>Vu?	**OK**	0.14
Horizontal shear:		
Avn h	82.25	
Vr h	2480.7	
Vu h	417.1	
Vr>Vu?	**OK**	0.17

6.14.2.8.3-1 shear yielding partial planes compression members only

diagonal member compression	-510.6		
diagonal angle off horizontal	45.0		
gusset thickness	1.75		
phi cy	0.80		
omega	0.88		
Fy	50.0		
Horizontal shear:			
horizontal shear length	**26.0**		
Vr h	928.9		
horizontal shear force	361.0	two gussets	
horizontal shear force, Vu h	180.5	one gusset	
Vr>Vu?	**OK**		0.19
Vertical shear:			
vertical shear length	**26.0**		
Vr h	928.9		
vertical shear force	361.0	two gussets	
vertical shear force, Vu v	180.5	one gusset	
Vr>Vu?	**OK**		0.19

6.14.2.8.4 compressive resistance on gusset whitmore section
compression diagonal

L24

Lmid	**9.0**	
bolt pattern length	**22.0**	
bolt pattern width	**6.5**	
diagonal member compresion Pu =	-510.6	two gussets
phi cg	0.75	
tg	1.75	
Width of Whitmore section	31.9	
Ag	55.8	
Lmid/tg	5.1	

$Pr/Ag = -4.93E-07x^4 + 0.000159x^3 - 0.0153x^2 + 0.1119x + 37.179$

Pr/Ag =	37.4	
Pr = phi Pn =	2085.5	
Pu	255.3	one gusset
Pr>Pu?	**OK**	0.12

6.14.2.8.5 tensile resistance of gusset

6.8.2.1-1 yielding on Ag whitmore
6.8.2.1-2 fracture on U*An<0.85Ag whitmore
6.13.5.2 block shear rupture
6.13.4 block shear rupture
6.13.4-1 block shear rupture

6.8.2.1-1 yielding on Ag whitmore
6.8.2.1-2 fracture on U*An<0.85Ag whitmore

Tension diagonal, forces on Whitmore section:

bolt pattern length	**22.0**	
bolt pattern width	**6.5**	
number of widthwise holes	**2.0**	
diameter of holes	**1**	
member tension Pu =	669.0	two gussets
member tension Pu =	334.5	one gusset
phi y	0.95	
phi u	0.80	
Fy	50.00	
Fu	65.00	
tg	1.75	
Width of Whitmore section	31.9	
Ag	55.8	
An	52.3	
0.85*Ag	47.4	

phi y * Pny yielding	2650.7	one gusset 6.8.2.1-1
phi u * Pnu fracture	2466.5	one gusset 6.8.2.1-2
Pu	334.5	
Pr>Pu?	**OK**	0.14

6.13.5.2 block shear rupture
6.13.4 block shear rupture
6.13.4-1 block shear rupture

phi bs	0.80
Fy	50.00
Fu	65.00
tg	1.75

at tension diagonal: 6.13.4-1

bolt hole dia	**1.0**	
shear holes	**9.0**	
shear sides	**2**	
tension width	**6.5**	
tension holes	**2**	
shear length	**20.0**	
member tension Pu =	669.0	two gussets
member tension Pu =	334.5	one gusset
Avn	38.50	
Atn	9.63	
Avg	70.00	
Rr1	1661.7	on net
Rr2	2124.5	on gross
Rr use	1661.7	min
Pu	334.5	
Rr>Pu?	**OK**	0.20

at left tension chord: 6.13.4-1

L24

bolt hole dia	1.0	
shear length	31.0	
shear holes	10	
shear sides	1	
tension width	11.0	
tension holes	4	
member tension Pu =	1257.0	two gussets
member tension Pu =	628.5	one gusset
Avn	36.75	
Atn	14.00	
Avg	54.25	
Rr1	1836.4	gross
Rr2	1986.6	net
Rr use	1836.4	min
Pu	628.5	
Rr>Pu?	**OK**	0.34

at right tension chord: 6.13.4-1

bolt hole dia	1.0	
shear length	31.0	
shear holes	11	
shear sides	1	
tension width	11.0	
tension holes	4	
member tension Pu =	1503.3	two gussets
member tension Pu =	751.7	one gusset
Avn	35.00	
Atn	14.00	
Avg	54.25	
Rr1	1783.6	gross
Rr2	1986.6	net
Rr use	1783.6	min
Pu	751.7	
Rr>Pu?	**OK**	0.42

6.14.2.8.6 CHORD SPLICES

JOINT L24

STRI Pu one gusset USE	751.7	
FATGI Tu one gusset USE	87.5	
phi cs	0.65	OPTION:
Fy	50.00	no web plates
Fu	65.00	no flange plates
hole diameter	1.00	USE TO AVOID THE ADDED GALVANIZING, LABOR, AND PIECES

	x dim	ydim	y from bot	Ag	Ay	Ayy	Io	holes	pitch	Aholes	Iholes	Ae	Ay	Ayy	Io
gusset plate	1.75	40.00	20.00	70.0	1400.0	28000.0	9333.3	9	4.44	-15.75	-2074.1	54.3	1085.0	21700.0	7259.3
flange plate 1	0.00	0.00	14.50	0.0	0.0	0.0	0.0	1		0.00		0.0	0.0	0.0	
flange plate 2	0.00	0.00	0.00	0.0	0.0	0.0	0.0	1		0.00		0.0	0.0	0.0	
web plate 1	0.00	0.00	7.50	0.0	0.0	0.0	0.0	1		0.00		0.0	0.0	0.0	
web plate 2	0.00	0.00	7.00	0.0	0.0	0.0	0.0	1		0.00		0.0	0.0	0.0	
W section flange		14.50													
W section web		0.50													
				70.0	1400.0	28000.0	9333.3					54.3	1085.0	21700.0	7259.3

Ag	70.0	
ybar	20.0	
e Wsection	12.8	
Ig	9333.3	
Sgbot	466.7	
Pu/A	10.7	
Pu*e/Sbot	20.5	
STRI sum	31.3	ksi demand
phics*Fy	32.5	ksi on gross section
STRI sum <? Phics*Fy	**OK**	0.96
Tu/A	1.25	
Tu*e/Sbot	2.39	
FATGI sum=delta Fn	3.6	ksi demand
delta Fth	16.0	ksi on net section Category B 6.6.1.2.5
delta Fn < delta Fth?	**OK**	0.23

An	54.3	
ybar	20.0	
e Wsection	12.8	
In	7259.3	
Snbot	363.0	
Pu/A	13.9	
Pu*e/Sbot	26.4	
sum	40.3	ksi demand
phics*Fu	42.3	ksi on net section
sum <? Phics*Fu	**OK**	0.95

GUSSET PLATE DESIGN: U23
Units: kip, inch

Diagram and forces:

STRI -1188.0 K

STRI -1696.4 K

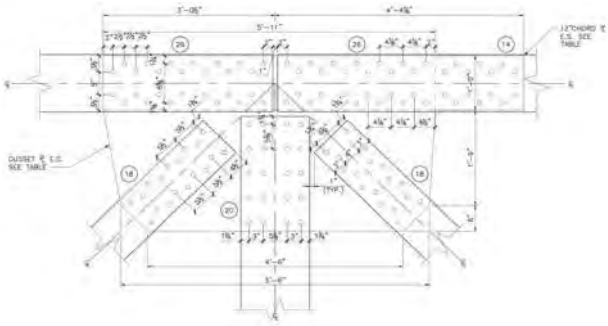

STRI -510.0 K

STRI 669.0 K

CONNECTION U23 ELEVATION

JOINT	**U23**
gusset thickness	**0.75**
vertical dimension	**39.0**
gusset length	**66.0**
hole diameter	**1.00**
Fy	**50.0**
Fu	**65.0**
gusset weight	0.55
chord plate thickness	**0.75**
chord plate width	**12.0**

6.14.2.8 Gusset plates
6.7.3 minimum plate thickness 3/8"
6.14.2.8.7 edge slenderness
Lmax unsupported 37.2 **CHECK** OK

6.13.1 minimum connection design forces
See force summary for forces and bolt requirements

6.13.2 bolt detailing requirements
See bolt detailing information

6.13.6.1.5 must reduce bolt strength resistance if fillers > 0.25" thickness
slip critical resistance needs no reduction
most bolt numbers are determined by slip critical resistance

Design forces:

Left side

Chord connection design force	-1188.0	compression
Diagonal connection design force	-510.0	compression
diagonal angle off horizontal	**45.0**	
Pu two gussets splice	-1548.6	horz components
Pu one gusset splice	-774.3	
Vu vertical two gussets shear	360.6	
Vu vertical one gusset shear	180.3	
Vu horizontal two gussets shear	833.7	
Vu horizontal one gusset shear	416.8	

Right side

Chord connection design force	-1696.4	compression
Diagonal connection design force	669.0	ignore tension for Pu
diagonal angle off horizontal	**45.0**	
Pu two gussets splice	-1696.40	horz components
Pu one gusset splice	-848.2	
Vu vertical two gussets shear	473.1	
Vu vertical one gusset shear	236.5	

Strength check of failure modes:

U23

6.14.2.8.3 shear on gusset plates
- 6.14.2.8.3-1 shear yielding
- 6.13.5.3-2 shear rupture
- 6.14.2.8.3-1 shear yielding partial planes compr members only

6.14.2.8.3-1 shear yielding on gross section, one gusset

omega	0.88		
phi vy	0.80		
gusset depth	39.00		
gusset length	66.00		
gusset thickness	0.75		
Fy	50.00		
Vertical shear:			
Avg v	29.25		
Vr v	597.2		
Vu v	236.5		
Vr>Vu?	**OK**	0.40	Load/Resistance
Horizontal shear:			
Avg h	49.50		
Vr h	1010.6		
Vu h	416.8		
Vr>Vu?	**OK**	0.41	

6.13.5.3-2 shear rupture on net section, one gusset

number of holes in vertical shear plane		**7**
number of holes in horizontal shear plane		**27**
Fu	65.00	
Vertical shear:		
Avn v	24.00	
Vr v	723.8	
Vu v	236.5	
Vr>Vu?	**OK**	0.33
Horizontal shear:		
Avn h	29.25	
Vr h	882.2	
Vu h	416.8	
Vr>Vu?	**OK**	0.47

6.14.2.8.3-1 shear yielding partial planes compression members only

diagonal member compression	-510.0		
diagonal angle off horizontal	45.0		
gusset thickness	0.75		
phi vy	0.80		
omega	0.88		
Fy	50.0		
Horizontal shear:			
horizontal shear length	**25.9**		
Vr h	396.2		
horizontal shear force	360.6	two gussets	
horizontal shear force, Vu h	180.3	one gusset	
Vr>Vu?	**OK**	0.46	
Vertical shear:			
vertical shear length	**25.0**		
Vr h	382.8		
vertical shear force	360.6	two gussets	
vertical shear force, Vu v	180.3	one gusset	
Vr>Vu?	**OK**	0.47	

6.14.2.8.4 compressive resistance on gusset whitmore section
compression diagonal

U23

Lmid	**9.0**	
bolt pattern length	**22.0**	
bolt pattern width	**6.5**	
diagonal member compresion Pu =	-510.0	two gussets
phi cg	0.75	
tg	0.75	
Width of Whitmore section	31.9	
Ag	23.9	
Lmid/tg	12.0	

$Pr/Ag = -4.93E\text{-}07x^4 + 0.000159x^3 - 0.0153x^2 + 0.1119x + 37.179$

Pr/Ag =	36.6		
Pr = phi Pn =	875.0		
Pu	255.0	one gusset	
Pr>Pu?	**OK**		0.29

6.14.2.8.5 tensile resistance of gusset

6.8.2.1-1 yielding on Ag whitmore
6.8.2.1-2 fracture on U*An<0.85Ag whitmore
6.13.5.2 block shear rupture
6.13.4 block shear rupture
6.13.4-1 block shear rupture

6.8.2.1-1 yielding on Ag whitmore
6.8.2.1-2 fracture on U*An<0.85Ag whitmore

Tension diagonal, forces on Whitmore section:

bolt pattern length	**22.0**	
bolt pattern width	**6.5**	
number of widthwise holes	**2**	
diameter of holes	**1.00**	
member tension Pu =	669.0	two gussets
member tension Pu =	334.5	one gusset
phi y	0.95	
phi u	0.80	
Fy	50.00	
Fu	65.00	
tg	0.75	
Width of Whitmore section	31.9	
Ag	23.9	
An	22.4	
0.85*Ag	20.3	

phi y * Pny yielding	1136.0	one gusset 6.8.2.1-1	
phi u * Pnu fracture	1057.1	one gusset 6.8.2.1-2	
Pu	334.5		
Pr>Pu?	**OK**		0.32

6.13.5.2 block shear rupture
6.13.4 block shear rupture
6.13.4-1 block shear rupture U23

phi bs	0.80
Fy	50.00
Fu	65.00
tg	0.75

at tension diagonal: 6.13.4-1

bolt hole dia	**1.0**	
shear holes	**9.0**	
shear sides	**2**	
tension width	**6.5**	
tension holes	**2**	
shear length	**23.8**	
member tension Pu =	669.0	two gussets
member tension Pu =	334.5	one gusset
Avn	22.13	
Atn	4.13	
Avg	35.63	
Rr1	881.8	on net
Rr2	1041.0	on gross
Rr use	881.8	min
Pu	334.5	
Rr>Pu?	**OK**	0.38

6.14.2.8.4 compressive resistance
left chord plate

Number of bolts	**0.0**	
bolt shear STRI	**27.0**	
chord plate compression force demand	0.0	one chord plate
Fy	50.00	
phi c	**0.95**	
t chord plate	0.75	
Width of chord plate	12.00	
Ag chord plate	9.0	
chord plate compr resistance phi c Pn	427.5	
phi c Pn>Pu?	**OK**	0.00

6.14.2.8.4 compressive resistance
right chord plate

Number of bolts	**14.0**	
bolt shear STRI	**27.0**	
chord plate compression force demand	378.0	one chord plate
Fy	50.00	
phi c	**0.95**	
t chord plate	0.75	
Width of chord plate	12.00	
Ag chord plate	9.0	
chord plate compr resistance phi c Pn	427.5	
phi c Pn>Pu?	**OK**	0.88

6.14.2.8.6 CHORD SPLICES

U23

JOINT U23

Pu one gusset USE	-774.3		
phi cs	0.65		OPTION:
Fy	50.00		no web plates
Fu	65.00		with flange plates
hole diameter	1.00		USE

	x dim	ydim	y from top	Ag	Ay	Ayy	Io
gusset plate	0.75	39.00	19.50	29.3	570.4	11122.3	3707.4
flange chord plate 1	0.75	12.00	6.75	9.0	60.8	410.1	108.0
flange chord plate 2	0.75	12.00	6.00	9.0	54.0	324.0	108.0
web chord plate 1	**0.00**	**0.00**	7.00	0.0	0.0	0.0	0.0
web chord plate 2	**0.00**	**0.00**	5.75	0.0	0.0	0.0	0.0
W section flange		**12.75**					
W section web		**1.25**					
				47.3	685.1	11856.4	3923.4

Ag	47.3	Lsplice	**5.00**		
ybar	14.5	K splice	0.50		
e Wsection	8.1	KLsqr12/tg=	11.55	check <?25	
			OK	0.46	
Ig	5845.5				
Sgtop	403.1				

Pu/A	-16.4	
Pu*e/Stop	-15.6	
sum	-32.0	ksi demand
phics*Fy	32.5	ksi on gross section
sum <? Phics*Fy	**OK**	-0.98

GUSSET PLATE DESIGN: U25

Units: kip, inch

Diagram and forces:

STRI -1696.4 K

STRI -510.0 K

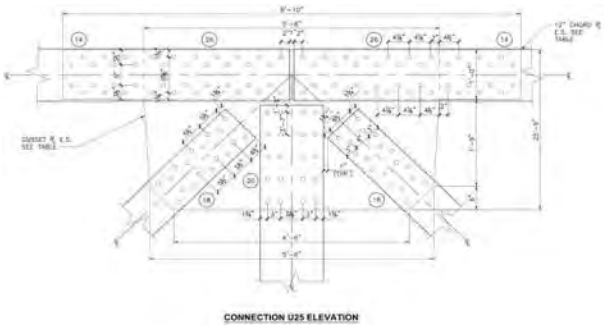

STRI -1696.4 K

STRI 669.0 K

JOINT	**U25**		6.14.2.8
gusset thickness	**0.75**		
vertical dimension	**39.0**		
gusset length	**66.0**		
hole diameter	**1.00**		
Fy	**50.0**		
Fu	**65.0**		
gusset plate weight	0.55	-0.90	
chord plate thickness	**1.00**		
chord plate width	**12.0**		
chord plate length	**106.0**		
chord plate weight	0.36		
gusset + chd plate weight	0.91		

Gusset plates

6.7.3 minimum plate thickness 3/8"

6.14.2.8.7 edge slenderness

Lmax unsupported 37.2 **CHECK** OK

6.13.1 minimum connection design forces

See force summary for forces and bolt requirements

6.13.2 bolt detailing requirements

See bolt detailing information

6.13.6.1.5 must reduce bolt strength resistance if fillers > 0.25" thickness

slip critical resistance needs no reduction

most bolt numbers are determined by slip critical resistance

Design forces:

Left side

Chord connection design force	-1696.4	compression
Diagonal connection design force	-510.0	compression
diagonal angle off horizontal	**45.0**	
Pu two gussets splice	-2057.0	horz components
Pu one gusset splice	-1028.5	
Vu vertical two gussets shear	360.6	
Vu vertical one gusset shear	180.3	
Vu horizontal two gussets shear	833.7	
Vu horizontal one gusset shear	416.8	

Right side

Chord connection design force	-1696.4	compression
Diagonal connection design force	669.0	ignore tension for Pu
diagonal angle off horizontal	**45.0**	
Pu two gussets splice	-1696.40	horz components
Pu one gusset splice	-848.2	
Vu vertical two gussets shear	473.1	
Vu vertical one gusset shear	236.5	

Strength check of failure modes:

U25

6.14.2.8.3 shear on gusset plates

6.14.2.8.3-1 shear yielding
6.13.5.3-2 shear rupture
6.14.2.8.3-1 shear yielding partial planes compr members only

6.14.2.8.3-1 shear yielding on gross section, one gusset

omega	0.88		
phi vy	0.80		
gusset depth	39.00		
gusset length	66.00		
gusset thickness	0.75		
Fy	50.00		
Vertical shear:			
Avg v	29.25		
Vr v	597.2		
Vu v	236.5		
Vr>Vu?	**OK**	0.40	Load/Resistance
Horizontal shear:			
Avg h	49.50		
Vr h	1010.6		
Vu h	416.8		
Vr>Vu?	**OK**	0.41	

6.13.5.3-2 shear rupture on net section, one gusset

number of holes in vertical shear plane		**7**
number of holes in horizontal shear plane		**27**
Fu	65.00	
Vertical shear:		
Avn v	24.00	
Vr v	723.8	
Vu v	236.5	
Vr>Vu?	**OK**	0.33
Horizontal shear:		
Avn h	29.25	
Vr h	882.2	
Vu h	416.8	
Vr>Vu?	**OK**	0.47

6.14.2.8.3-1 shear yielding partial planes compression members only

diagonal member compression	-510.0		
diagonal angle off horizontal	45.0		
gusset thickness	0.75		
phi vy	0.80		
omega	0.88		
Fy	50.0		
Horizontal shear:			
horizontal shear length	**25.9**		
Vr h	396.2		
horizontal shear force	360.6	two gussets	
horizontal shear force, Vu h	180.3	one gusset	
Vr>Vu?	**OK**	0.46	
Vertical shear:			
vertical shear length	**25.0**		
Vr h	382.8		
vertical shear force	360.6	two gussets	
vertical shear force, Vu v	180.3	one gusset	
Vr>Vu?	**OK**	0.47	

6.14.2.8.4 compressive resistance on gusset whitmore section
compression diagonal

U25

Lmid	**9.0**	
bolt pattern length	**22.0**	
bolt pattern width	**6.5**	
diagonal member compresion Pu =	-510.0	two gussets
phi cg	0.75	
tg	0.75	
Width of Whitmore section	31.9	
Ag	23.9	
Lmid/tg	12.0	

$Pr/Ag = -4.93E\text{-}07x^4 + 0.000159x^3 - 0.0153x^2 + 0.1119x + 37.179$

Pr/Ag =	36.6		
Pr = phi Pn =	875.0		
Pu	255.0	one gusset	
Pr>Pu?	**OK**		0.29

6.14.2.8.5 tensile resistance of gusset

6.8.2.1-1 yielding on Ag whitmore
6.8.2.1-2 fracture on U*An<0.85Ag whitmore
6.13.5.2 block shear rupture
6.13.4 block shear rupture
6.13.4-1 block shear rupture

6.8.2.1-1 yielding on Ag whitmore
6.8.2.1-2 fracture on U*An<0.85Ag whitmore

Tension diagonal, forces on Whitmore section:

bolt pattern length	**22.0**	
bolt pattern width	**6.5**	
number of widthwise holes	**2**	
diameter of holes	**1.00**	
member tension Pu =	669.0	two gussets
member tension Pu =	334.5	one gusset
phi y	0.95	
phi u	0.80	
Fy	50.00	
Fu	65.00	
tg	0.75	
Width of Whitmore section	31.9	
Ag	23.9	
An	22.4	
0.85*Ag	20.3	
phi y * Pny yielding	1136.0	one gusset 6.8.2.1-1
phi u * Pnu fracture	1057.1	one gusset 6.8.2.1-2
Pu	334.5	
Pr>Pu?	**OK**	0.32

6.13.5.2 block shear rupture
6.13.4 block shear rupture
6.13.4-1 block shear rupture U25

phi bs	0.80
Fy	50.00
Fu	65.00
tg	0.75

at tension diagonal: 6.13.4-1

bolt hole dia	**1.0**	
shear holes	**9.0**	
shear sides	**2**	
tension width	**6.5**	
tension holes	**2**	
shear length	**23.8**	
member tension Pu =	669.0	two gussets
member tension Pu =	334.5	one gusset
Avn	22.13	
Atn	4.13	
Avg	35.63	
Rr1	881.8	on net
Rr2	1041.0	on gross
Rr use	881.8	min
Pu	334.5	
Rr>Pu?	**OK**	0.38

6.14.2.8.4 compressive resistance
left chord plate

Number of bolts	**0.0**	
bolt shear STRI	**27.0**	
chord plate compression force demand	0.0	one chord plate
Fy	50.00	
phi c	**0.95**	
t chord plate	1.00	
Width of chord plate	12.00	
Ag chord plate	12.0	
chord plate compr resistance phi c Pn	570.0	
phi c Pn>Pu?	**OK**	0.00

6.14.2.8.4 compressive resistance
right chord plate

Number of bolts	**14.0**	
bolt shear STRI	**27.0**	
chord plate compression force demand	378.0	one chord plate
Fy	50.00	
phi c	**0.95**	
t chord plate	1.00	
Width of chord plate	12.00	
Ag chord plate	12.0	
chord plate compr resistance phi c Pn	570.0	
phi c Pn>Pu?	**OK**	0.66

6.14.2.8.6 CHORD SPLICES

JOINT U25 U25

Pu one gusset USE -848.2

phi cs	0.65	OPTION:
Fy	50.00	no web plates
Fu	65.00	with flange plates
hole diameter	1.00	USE

	x dim	ydim	y from top	Ag	Ay	Ayy	Io
gusset plate	0.75	39.00	19.50	29.3	570.4	11122.3	3707.4
flange chord plate 1	1.00	12.00	6.75	12.0	81.0	546.8	144.0
flange chord plate 2	1.00	12.00	6.00	12.0	72.0	432.0	144.0
web chord plate 1	**0.00**	**0.00**	7.00	0.0	0.0	0.0	0.0
web chord plate 2	**0.00**	**0.00**	5.75	0.0	0.0	0.0	0.0
W section flange		**12.75**					
W section web		**1.25**					
				53.3	723.4	12101.1	3995.4

Ag	53.3	Lsplice	**5.00**		
ybar	13.6	K splice	0.50		
e Wsection	7.2	KLsqr12/tg=	11.55	check <?25	
			OK	0.46	
Ig	6269.8				
Sgtop	461.5				

Pu/A	-15.9	
Pu*e/Stop	-13.2	
sum	-29.2	ksi demand
phics*Fy	32.5	ksi on gross section
sum <? Phics*Fy	**OK**	-0.90

G. FLOOR BEAM DESIGN

SUPERSTRUCTURE DESIGN CALCULATIONS FOR BRIDGE #17, RUTLAND, VT

FST

PROJECT

SUBJECT

PROJECT NUMBER

SHEET NUMBER

DATE

COMPUTED BY TD

CHECKED BY MAB

6.14.2.9
300#/' STRI PERM

U-FRAME CONNECTION

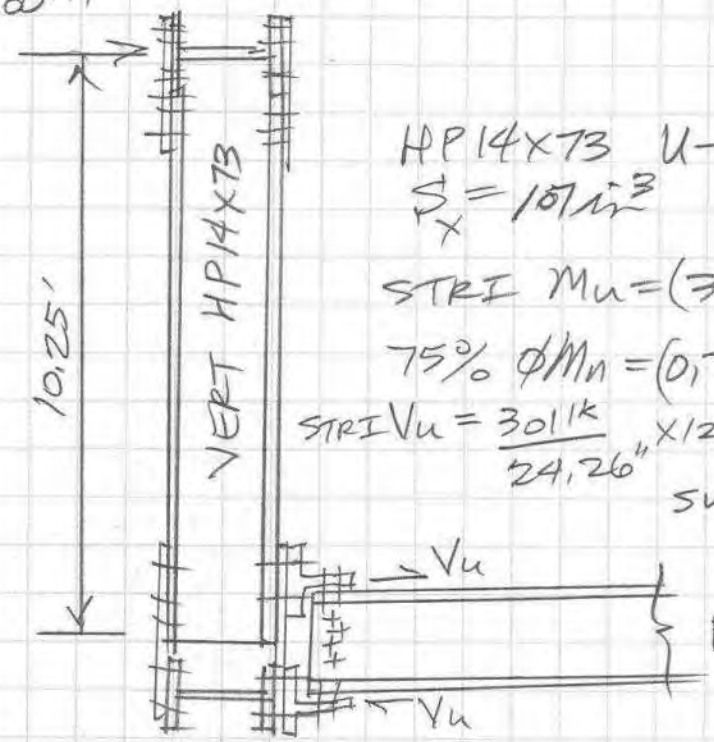

HP14x73 U-FRAME BENDING

$S_x = 107 in^3$

STRI $M_u = (300^{\#}/' \; 11.4' \times 10.25')/1.25 = 44^k$

75% $\phi M_n = (0.75)\, 0.9(50)\, 107/12 = 301^{'k}$

STRI $V_u = \frac{301^{'k}}{24.26''} \times 12 = 149^k \div 27.7 = 5.4$ BOLTS

SVCII BOLTS $= \frac{44^k}{24.26} \times 12 \div 12.2 = 1$ BOLT

FB W24x117

$t_w = 0.55''$

$d = 24.26''$

CONNECTION WEB: 75% $[\phi V_n = 0.9(0.58)50(0.55)24.26]$

$= 348^k \times 0.75$

$= 261^k$

BOLT STRI $\phi R_n = 27.7^k$

NEED $261/27.7 = 9.4$ BOLTS

USE 2 PLANES @ 5 BOLTS

$= 10$ BOLT PLANES

USE 8 BOLTS IN WT9x35.5 TOP & BOT, USE 5 BOLTS IN W24 WEB

WT STEM STRESS STRI $= \frac{301^{'k}}{24.26''} \times 12 / (1/2'' \times 12'')$

$= 24.8$ ksi $< \phi R_n = 45$ ksi

OK

FST

PROJECT Rutland, VT

SUBJECT Steel Truss Bridge
Floorbeams Notional Load

PROJECT NUMBER VQ-093
SHEET NUMBER 1
DATE 2/25/15
COMPUTED BY MAB
CHECKED BY TD

AASHTO LRFD

6.14.2.9—Half Through-Trusses

The vertical truss members and the floorbeams and their connections in half through-truss spans shall be proportioned to resist a lateral force of not less than 0.30 klf applied at the top chord panel points of each truss, considered as a permanent load for the Strength I Load Combination and factored accordingly.

The top chord shall be considered as a column with elastic lateral supports at the panel points.

C6.14.2.9

A discussion of the buckling analysis of columns with elastic lateral supports is contained in Timoshenko and Gere (1961) and in Galambos (1998).

- 11'-4½" Floorbeam Spacing Controls the design
- Vertical Spacing = (2)(11'-4½") = 22'-9"

(22'-9")(0.3klf) = 6.83k Point load at the top of each vertical pushing inward.

FST

PROJECT Rutland, VT

SUBJECT Steel Truss Bridge
Floorbeams

PROJECT NUMBER VQ-093
SHEET NUMBER 2
DATE 2/25/15
COMPUTED BY MAB
CHECKED BY TD

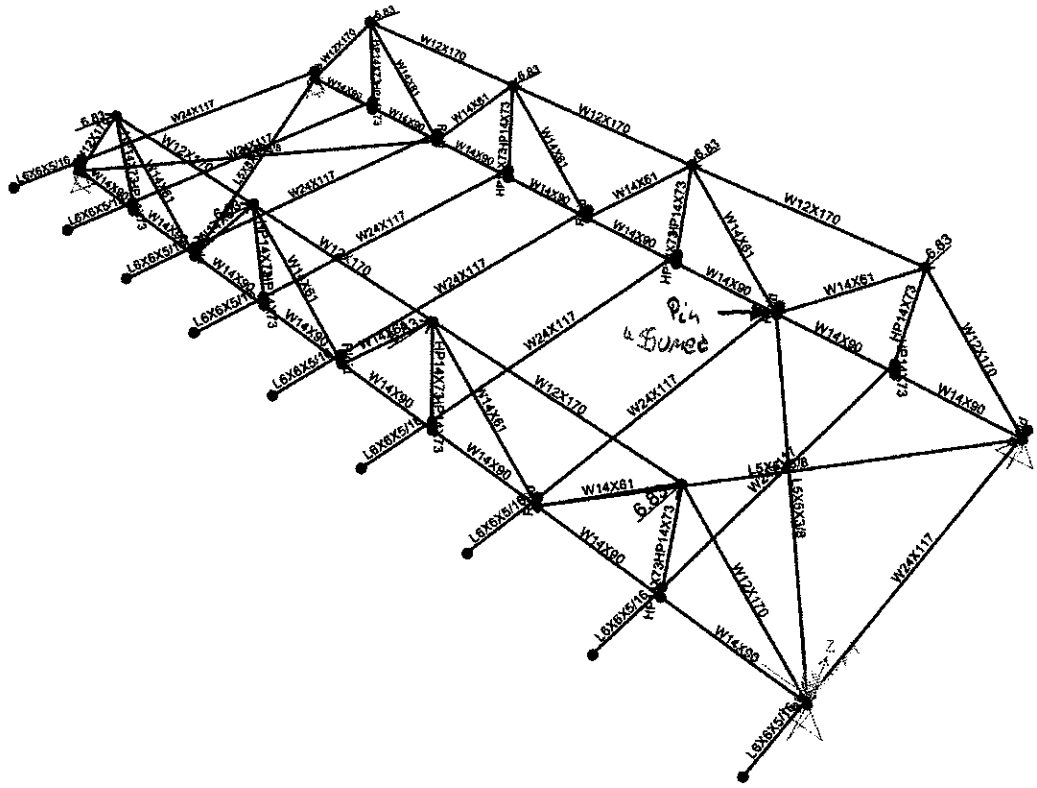

- assume only the floor beam directly under the vertical is active in resisting the bending moments generated by the Notional Load.

FST 100 YEARS

PROJECT Rutland, VT

SUBJECT Steel Truss Bridge
Floorbeams

PROJECT NUMBER VQ-093
SHEET NUMBER 3
DATE 2/25/15
COMPUTED BY MAB
CHECKED BY TD

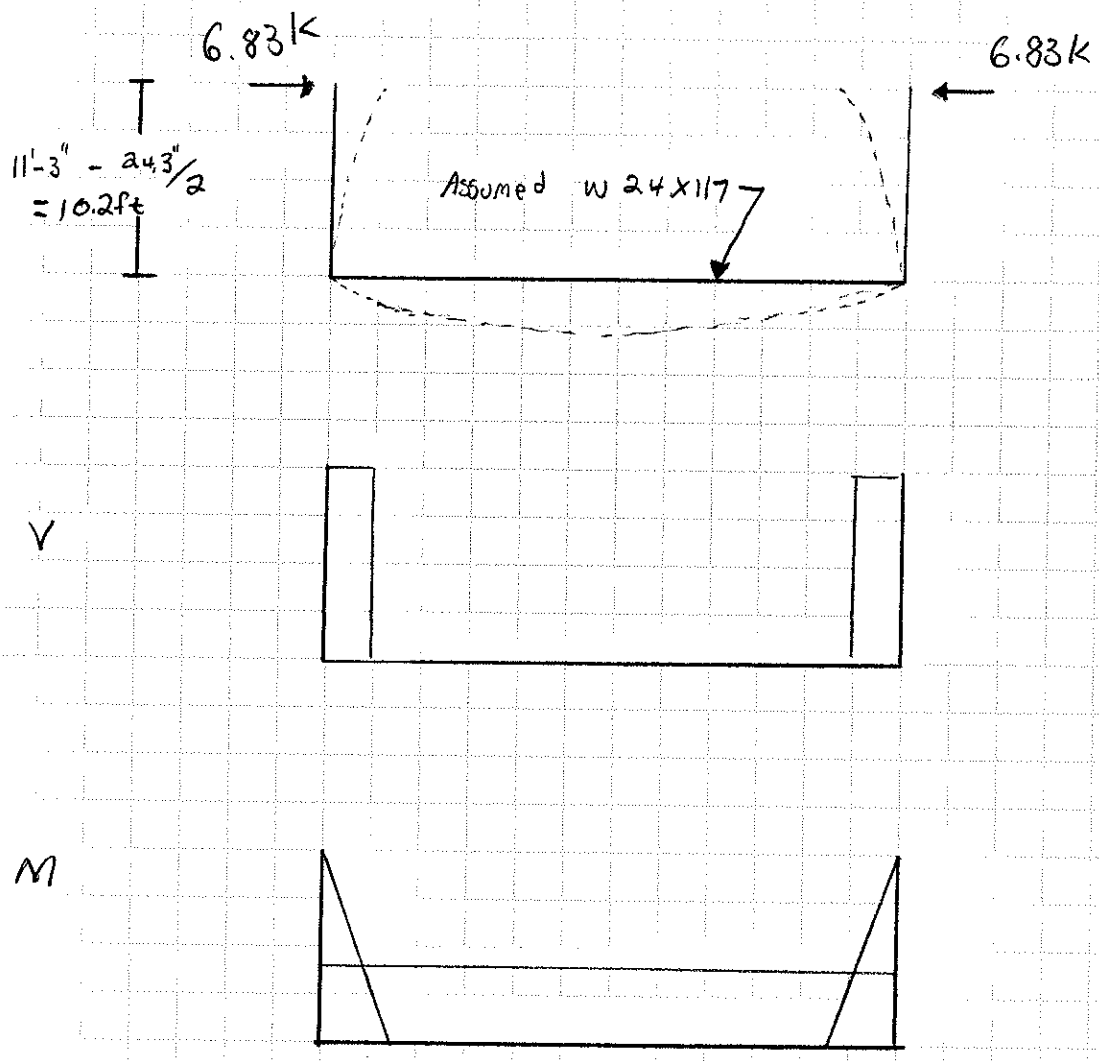

$V = 6.83K$

$M = (6.83K)(10.2ft) = 69.9\ ft \cdot K$

Strength 1 Load Factor is 1.25

factored Notional load Moment = 87.4 ft·K

FST

PROJECT Rutland, VT

SUBJECT Steel Truss Bridge

Floor beams

PROJECT NUMBER VQ-093

SHEET NUMBER 4

DATE 11/5/14

COMPUTED BY MAB

CHECKED BY TD

AASHTO LRFD Bridge Design Specifications 6th Edition (LRFD)
4.6.2.2.2f

4.6.2.2.2f—Flexural Moments and Shear in Transverse Floorbeams

If the deck is supported directly by transverse floorbeams, the floorbeams may be designed for loads determined in accordance with Table 4.6.2.2.2f-1.

The fractions provided in Table 4.6.2.2.2f-1 shall be used in conjunction with the 32.0-kip design axle load alone. For spacings of floorbeams outside the given ranges of applicability, all of the design live loads shall be considered, and the lever rule may be used.

Table 4.6.2.2.2f-1—Distribution of Live Load for Transverse Beams for Moment and Shear

Type of Deck	Fraction of Wheel Load to Each Floorbeam	Range of Applicability
Plank	$\frac{S}{4}$	N/A
Laminated Wood Deck	$\frac{S}{5}$	$S \leq 5.0$
Concrete	$\frac{S}{6}$	$S \leq 6.0$
Steel Grid and Unfilled Grid Deck Composite with Reinforced Concrete Slab	$\frac{S}{4.5}$	$t_g \leq 4.0$ $S \leq 5.0$
Steel Grid and Unfilled Grid Deck Composite with Reinforced Concrete Slab	$\frac{S}{6}$	$t_g > 4.0$ $S \leq 6.0$
Steel Bridge Corrugated Plank	$\frac{S}{5.5}$	$t_g \geq 2.0$

$S > 11ft > 6ft$ ∴ use the lever rule and apply all design live loads.

FST

PROJECT Rutland, VT

SUBJECT Steel Truss Bridge
Floorbeams

PROJECT NUMBER VQ-093
SHEET NUMBER 5
DATE 11/5/14
COMPUTED BY MAB
CHECKED BY TD

assume the beams weigh 117 lb/ft for dead load Calculations.

take the Spacing to be 11.375 ft

take the Span to be 33.5 ft

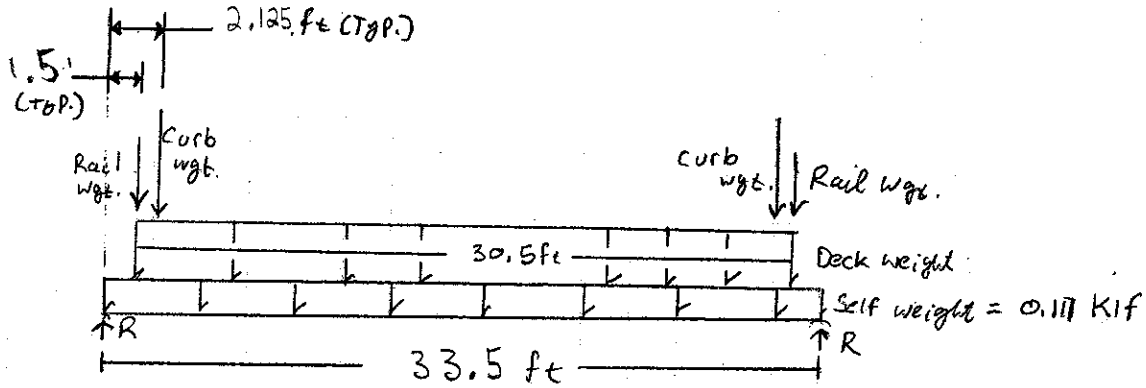

Dead Load Free Body Diagram

Assume the bridge rail weighs 100 plf

then rail wgt. = (0.1 klf)(11.375 ft) = 1.14 k

Curb wgt. = (10 in)(14.5 in)(1 ft²/144 in²)(0.15 kcf)(11.375 ft) = 1.72 k

Deck weight = (12.5 in)(1 ft/12 in)(11.375 ft)(0.15 kcf) = 1.78 klf

R = 1.14 k + 1.72 k + 1.78 klf • 15.25 ft + 0.117 klf • 16.75 ft

R = 31.9 k

FST

PROJECT Rutland, VT

SUBJECT Steel Truss Bridge
Floorbeams

PROJECT NUMBER VQ-093
SHEET NUMBER 6
DATE 11/5/14
COMPUTED BY MAB
CHECKED BY TD

$V_{DL\,max} = 31.9\ k$

$M_{DL\,Max} = (1.14k)(1.5\ ft) + (1.72k)(2.125\ ft) + \frac{1}{8}(0.117\,k/f)(33.5\ ft)^2 + \ldots$
$\ldots (30.5ft)(\frac{1}{2})(1.78\,k/f)(1.5\ ft) + (30.5ft)(\frac{1}{2})(1.78\,k/f)(30.5ft)(\frac{1}{8})(\frac{1}{2})$
$\ldots + 69.9\ ft \cdot k$

$M_{DL\,Max} = 339.4$
@ midspan

HL-93 TRUCK LOADING FOR MOMENT

2 Lanes

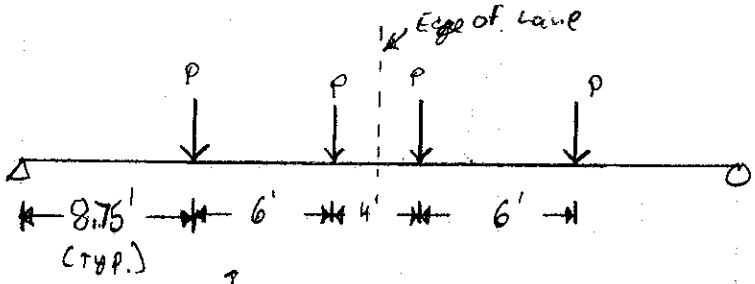

$P = (16k)(1.33) = 21.3k$ (I)

$M_{max} = (8.75ft + 14.75\ ft)(21.3k) = 500.6\ ft \cdot k$
@ midspan

Single Lane

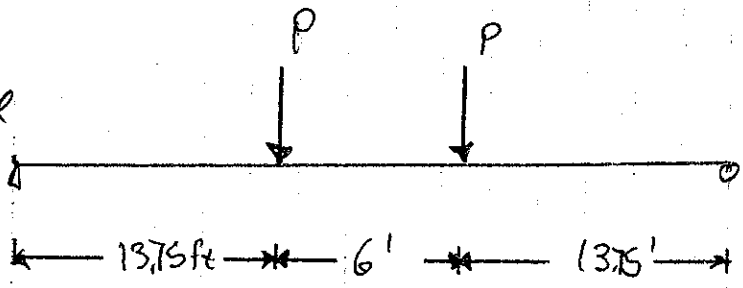

$P = (16k)(1.33)(1.2) = 25.5k$ (I, M)

$M_{max} = (25.5k)(13.75ft) = 350.6\ ft \cdot k$

FST

PROJECT Rutland, VT

SUBJECT Steel Truss Bridge
Floor Beams.

PROJECT NUMBER VG-093
SHEET NUMBER 7
DATE 11/5/14
COMPUTED BY MAB
CHECKED BY TD

HL-93 TRUCK LOADING FOR SHEAR

Single lane.

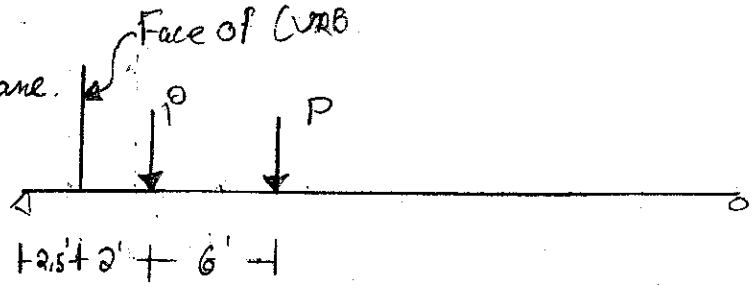

$$V_{max} = (25.5\,k)\left(\frac{33\tfrac{1}{2} - 4.5 + 33\tfrac{1}{2} - 10.5}{33.5}\right) = 39.6\ k$$

Two Lanes

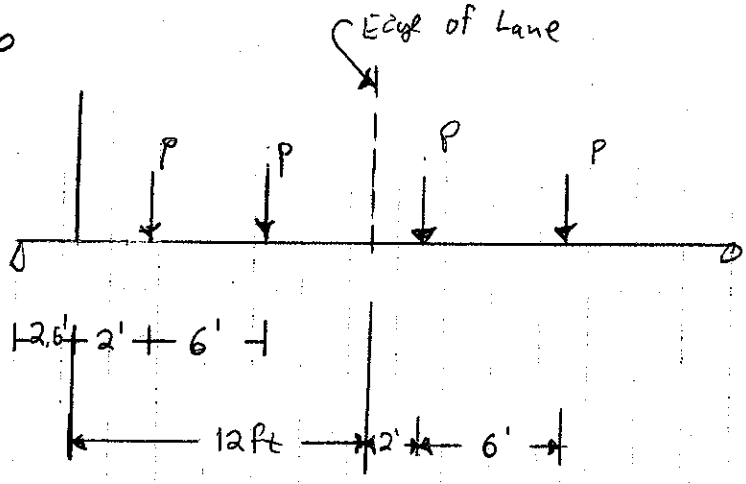

$$V_{max} = (21.3k)\left(\frac{33.5 - 4.5 + 33.5 - 10.5 + 33.5 - 16.5 + 33.5 - 22.5}{33.5}\right) = 50.9\ k$$

FST

PROJECT Rutland, VT

SUBJECT Steel Truss Bridge
Floorbeams

PROJECT NUMBER VQ-093
SHEET NUMBER 8
DATE 11/5/14
COMPUTED BY MAB
CHECKED BY TD

HL-93 TANDEM LOADING FOR MOMENT

The diagrams are the same as for the HL-93 truck except the P values are different.

$$P_{single\ Lane} = (12.5k)(1.33)(1.2)\left(1 + \frac{11.375 - 4}{11.375}\right) = 32.9k$$

$$P_{two\ Lanes} = (12.5k)(1.33)\left(1 + \frac{11.375 - 4}{11.375}\right) = 27.4k$$

$$\text{Max Tandem Single Lane Moment} = \left(\frac{32.9k}{25.5k}\right) 350.6\ ft{\cdot}k = 452.3\ ft{\cdot}k$$

$$\text{Max Tandem Two Lane Moment} = \left(\frac{27.4k}{21.3k}\right) \cdot 500.6\ ft{\cdot}k = 644.0\ ft{\cdot}k$$

HL-93 TANDEM LOADING FOR SHEAR

$$\text{Max tandem Single Lane Shear} = \left(\frac{32.9k}{25.6k}\right) \cdot 39.6k = 51.1\ k$$

$$\text{max tandem 2-Lane Shear} = \left(\frac{27.4}{21.3}\right) \cdot 50.9\ k = 65.5\ k$$

FST

PROJECT Rutland, VT

SUBJECT Steel Truss Bridge
Floorbeams

PROJECT NUMBER VA-093
SHEET NUMBER 9
DATE 11/5/14
COMPUTED BY MAB
CHECKED BY TD

LANE LOAD FOR MOMENT.

Single Lane:

$w = (0.064\ ksf)(11.375\ ft)(1.2^{M}) = 0.874\ klf$

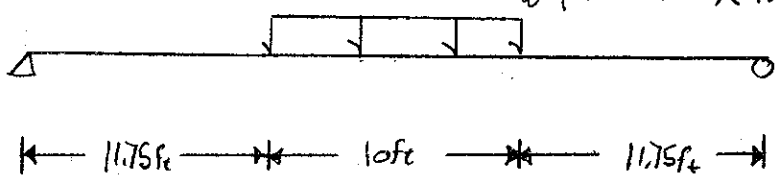

$M_{max} = (5ft)(0.874\ klf)(11.75ft) + (5ft)(0.874\ klf)(5ft)(1/2) = 62.3\ ft{\cdot}k$
@ midspan

Two Lanes:

$w = (0.064\ ksf)(11.375\ ft) = 0.728\ klf$

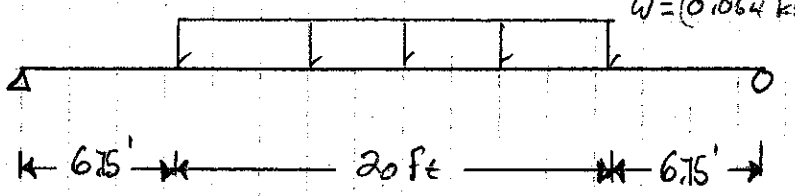

$M_{max} = (10ft)(0.728\ klf)(6.75ft) + (10ft)(0.728\ klf)(10ft)(1/2) = 85.5\ k{\cdot}ft$

FST

PROJECT Rutland, VT

SUBJECT Steel Truss Bridge
Floorbeams

PROJECT NUMBER VQ-093
SHEET NUMBER 10
DATE 11/6/14
COMPUTED BY MAB
CHECKED BY TD

LANE LOAD FOR SHEAR

Single Lane:

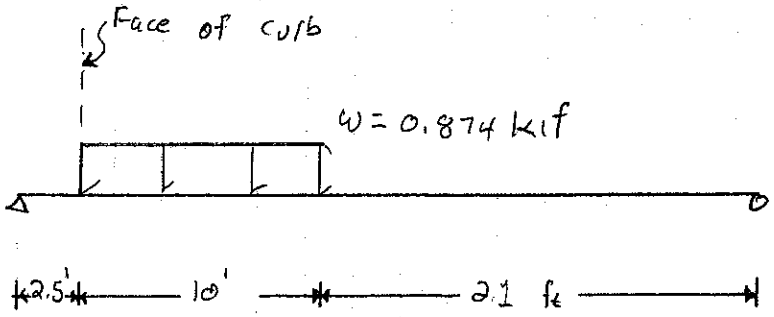

$$V_{max} = (10ft)(0.874\ klf)\left(\frac{33.5-7.5}{33.5}\right) = 6.8\ k$$

Two Lanes:

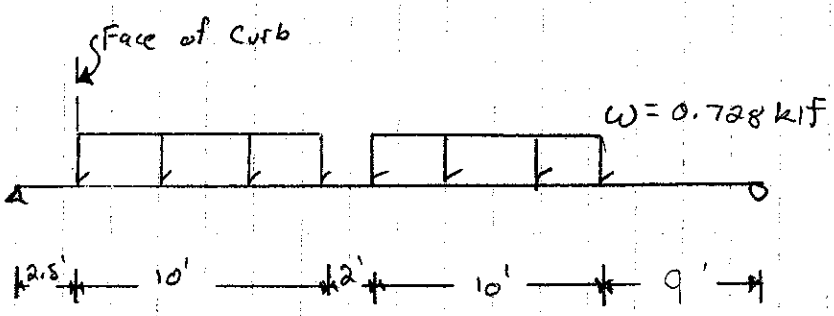

$$V_{max} = (20ft)(0.728\ klf)\left(\frac{33.5-13.5}{33.5}\right) = 8.7\ k$$

FST

PROJECT Rutland, Vt

PROJECT NUMBER VQ-093

SHEET NUMBER 11

SUBJECT Steel Truss Bridge

DATE 11/10/14

COMPUTED BY MAB

Floorbeams Design Loads

CHECKED BY TD

STRENGTH I MOMENT

2-Lane Tandem Controls

$M_U = (1.75)(85.5 ft{\cdot}k + 644.0 ft{\cdot}k) + (1.25)(339.4 ft{\cdot}k)$

$M_U = 1700.9 ft{\cdot}k$

$V_U = (1.75)(8.7k + 65.5k) + (1.25)(31.9 k)$

$V_U = 169.7 k$

FST

PROJECT Rutland, VT

SUBJECT Steel Truss Bridge
Floorbeams.

PROJECT NUMBER VQ-093
SHEET NUMBER 12
DATE 11/10/14
COMPUTED BY MAB
CHECKED BY TD

Try a W24 x 117 Composite with the deck.

AASHTO LRFD Bridge Design Specifications 6th Edition (LRFD)
4.6.2.6.5

b_e = effective flange width.

$b_e/2 < 6 \cdot$ deck thickness

$b_e/2 < \text{Span}/10$ where Span = floorbeam Span.

deck thickness = 10 in

$6 \cdot$ deck thickness = 60 in

Span = 33 ft

$\text{Span}/10 = 3.3 \text{ ft} = 39.6 \text{ in}$

39.6" Controls

COMPOSITE SECTION:

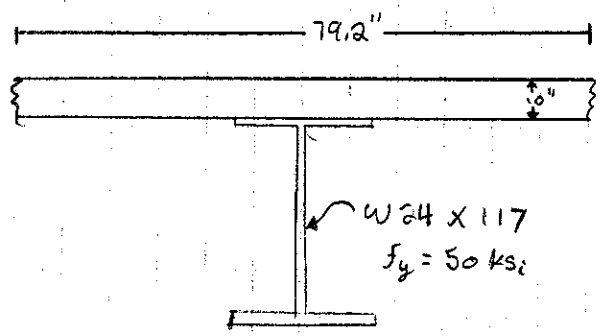

$f'_c = 4$ ksi

$n = 8$

(LRFD C6.10.1.1.1b)

FSI

PROJECT NUMBER VQ-093

SHEET NUMBER 13

DATE 2/25/15

COMPUTED BY MAB

CHECKED BY TD

PROJECT Rutland, VT

SUBJECT Steel T Truss Bridge

Floorbeams

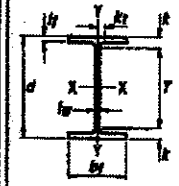

Table 1–1 (continued)
W Shapes
Dimensions

Shape	Area, A	Depth, d		Web Thickness, t_w	$\frac{t_w}{2}$	Flange Width, b_f		Flange Thickness, t_f		Distance k		Distance k_1	Distance T	Workable Gage
										k_{des}	k_{det}			
	in.²	in.		in.	in.	in.		in.		in.	in.	in.	in.	in.
W24×370[h]	109	26.0	26	1.52	1 1/2	3/4	13.7	13 5/8	2.72	2 3/4	3.22	3 3/8	1 9/16	20 3/4	5 1/2
×335[h]	98.4	27.5	27 1/2	1.38	1 3/8	11/16	13.5	13 1/2	2.48	2 1/2	2.98	3 3/8	1 1/2		
×306[h]	89.8	27.1	27 1/8	1.26	1 1/4	5/8	13.4	13 3/8	2.28	2 1/4	2.78	3 3/16	1 7/16		
×279[h]	82.0	26.7	26 3/4	1.16	1 3/16	5/8	13.3	13 1/4	2.09	2 1/16	2.59	3	1 7/16		
×250	73.5	26.3	26 3/8	1.04	1 1/16	9/16	13.2	13 1/8	1.89	1 7/8	2.39	2 13/16	1 3/8		
×229	67.2	26.0	26	0.960	15/16	1/2	13.1	13 1/8	1.73	1 3/4	2.23	2 5/8	1 3/16		
×207	60.7	25.7	25 3/4	0.870	7/8	7/16	13.0	13	1.57	1 9/16	2.07	2 1/2	1 1/4		
×192	56.3	25.5	25 1/2	0.810	13/16	7/16	13.0	13	1.46	1 7/16	1.96	2 3/8	1 1/4		
×176	51.7	25.2	25 1/4	0.750	3/4	3/8	12.9	12 7/8	1.34	1 9/16	1.84	2 1/4	1 3/16		
×162	47.7	25.0	25	0.705	11/16	3/8	13.0	13	1.22	1 1/4	1.72	2 1/8	1 3/16		
×146	43.0	24.7	24 3/4	0.650	5/8	5/16	12.9	12 7/8	1.09	1 1/16	1.59	2	1 1/8		
×131	38.5	24.5	24 1/2	0.605	5/8	5/16	12.0	12 1/8	0.960	15/16	1.46	1 7/8	1 1/8		
×117[c]	34.4	24.3	24 1/4	0.550	9/16	5/16	12.8	12 3/4	0.850	7/8	1.35	1 3/4	1 1/8		
×104[c]	30.6	24.1	24	0.500	1/2	1/4	12.8	12 3/4	0.750	3/4	1.25	1 5/8	1 1/16		
W24×103[c]	30.3	24.5	24 1/2	0.550	9/16	5/16	9.00	9	0.980	1	1.46	1 7/8	1 1/8	20 3/4	5 1/2
×94[c]	27.7	24.3	24 1/4	0.515	1/2	1/4	9.07	9 1/8	0.875	7/8	1.38	1 3/4	1 1/16		
×84[c]	24.7	24.1	24 1/8	0.470	1/2	1/4	9.02	9	0.770	3/4	1.27	1 11/16	1 1/16		
×76[c]	22.4	23.9	23 7/8	0.440	7/16	1/4	8.99	9	0.680	11/16	1.18	1 9/16	1 1/16		
×68[c]	20.1	23.7	23 3/4	0.415	7/16	1/4	8.97	9	0.585	9/16	1.09	1 1/2	1 1/16		
W24×62[c]	18.2	23.7	23 3/4	0.430	7/16	1/4	7.04	7	0.590	9/16	1.09	1 1/2	1 1/16	20 3/4	3 1/2[d]
×55[c,e]	16.2	23.6	23 5/8	0.395	3/8	3/16	7.01	7	0.505	1/2	1.01	1 7/16	1	20 3/4	3 1/2[d]
W21×201	59.2	23.0	23	0.910	15/16	1/2	12.6	12 5/8	1.63	1 5/8	2.13	2 1/2	1 5/16	18	5 1/2
×182	53.6	22.7	22 3/4	0.830	13/16	7/16	12.5	12 1/2	1.48	1 1/2	1.98	2 3/8	1 1/4		
×166	48.8	22.5	22 1/2	0.750	3/4	3/8	12.4	12 3/8	1.36	1 3/8	1.86	2 1/4	1 3/16		
×147	43.2	22.1	22	0.720	3/4	3/8	12.5	12 1/2	1.15	1 1/8	1.65	2	1 3/16		
×132	38.8	21.8	21 7/8	0.650	5/8	5/16	12.4	12 1/2	1.04	1 1/16	1.54	1 15/16	1 1/8		
×122	35.9	21.7	21 5/8	0.600	5/8	5/16	12.4	12 3/8	0.960	15/16	1.46	1 13/16	1 1/8		
×111	32.7	21.5	21 1/2	0.550	9/16	5/16	12.3	12 3/8	0.875	7/8	1.38	1 3/4	1 1/8		
×101[c]	29.8	21.4	21 3/8	0.500	1/2	1/4	12.3	12 1/4	0.800	13/16	1.30	1 11/16	1 1/16		

[c] Shape is slender for compression with $F_y = 50$ ksi.
[d] The actual size, combination, and orientation of fastener components should be compared with the geometry of the cross-section to ensure compatibility.
[e] Flange thickness greater than 2 in. Special requirements may apply per AISC Specification Section A3.1c.
[h] Shape does not meet the h/t_w limit for shear in Specification Section G2.1a with $F_y = 50$ ksi.

Table 1–1 (continued)
W Shapes
Properties

W24 – W21

Nominal Wt.	Compact Section Criteria $\frac{b_f}{2t_f}$	Compact Section Criteria $\frac{h}{t_w}$	Axis X-X I	Axis X-X S	Axis X-X r	Axis X-X Z	Axis Y-Y I	Axis Y-Y S	Axis Y-Y r	Axis Y-Y Z	r_{ts}	h_o	Torsional Properties J	Torsional Properties C_w
lb/ft			in.⁴	in.³	in.	in.³	in.⁴	in.³	in.	in.³	in.	in.	in.⁴	in.⁶
370	2.51	14.2	13400	957	11.1	1130	1160	170	3.27	267	3.92	25.3	201	186000
335	2.73	15.6	11900	864	11.0	1020	1030	152	3.23	238	3.86	25.0	152	161000
306	2.94	17.1	10700	789	10.9	922	919	137	3.20	214	3.81	24.8	117	142000
279	3.16	18.6	9600	716	10.8	835	823	124	3.17	193	3.76	24.6	90.5	125000
250	3.49	20.7	8490	644	10.7	744	724	110	3.14	171	3.71	24.5	66.6	108000
229	3.79	22.5	7650	588	10.7	675	651	99.4	3.11	154	3.67	24.3	51.3	96100
207	4.14	24.8	6820	531	10.6	606	578	88.8	3.08	137	3.62	24.1	38.3	84100
192	4.43	26.6	6250	491	10.5	559	530	81.8	3.07	126	3.60	24.0	30.8	76300
176	4.81	28.7	5680	450	10.5	511	479	74.3	3.04	115	3.57	23.9	23.9	68400
162	5.31	30.6	5170	414	10.4	468	443	68.4	3.05	105	3.57	23.8	18.5	62600
146	5.92	33.2	4580	371	10.3	418	391	60.5	3.01	93.2	3.53	23.7	13.4	54600
131	6.70	35.8	4020	328	10.2	370	340	53.0	2.97	81.5	3.48	23.5	9.50	47100
117	7.53	39.2	3540	291	10.1	327	297	46.5	2.94	71.4	3.46	23.4	6.72	40900
104	8.59	43.1	3100	258	10.1	289	268	40.7	2.91	62.4	3.42	23.3	4.72	35200
103	4.59	39.2	3000	245	10.0	280	119	26.5	1.99	41.5	2.40	23.9	7.07	16600
94	5.18	41.9	2700	222	9.87	254	109	24.0	1.96	37.5	2.40	23.4	5.28	15000
84	5.86	45.9	2370	196	9.79	224	94.4	20.9	1.95	32.6	2.37	23.3	3.70	12800
76	6.81	49.0	2100	176	9.69	200	82.5	18.4	1.92	28.8	2.34	23.2	2.68	11100
68	7.66	52.9	1830	154	9.55	177	70.4	15.7	1.87	24.5	2.30	23.1	1.97	9490
62	5.97	50.1	1550	131	9.23	153	34.5	9.80	1.38	15.7	1.76	23.2	1.71	4620
55	6.94	54.6	1350	114	9.11	134	29.1	8.30	1.34	13.3	1.71	23.1	1.18	3870
201	3.86	20.6	5310	481	9.47	530	542	86.1	3.02	133	3.55	21.4	40.9	62000
182	4.22	22.6	4730	417	9.40	476	483	77.2	3.00	119	3.51	21.2	30.7	54400
166	4.57	25.0	4280	380	9.36	432	435	70.0	2.99	108	3.48	21.1	23.6	48500
147	5.44	26.1	3630	329	9.17	373	376	60.1	2.95	92.6	3.45	20.9	15.4	41100
132	6.01	28.9	3220	295	9.12	333	333	53.5	2.93	82.3	3.42	20.8	11.3	38000
122	6.45	31.3	2960	273	9.08	307	305	49.2	2.92	75.6	3.40	20.7	8.98	32700
111	7.05	34.1	2670	249	9.05	279	274	44.5	2.90	68.2	3.37	20.6	6.83	29200
101	7.68	37.5	2420	227	9.02	253	248	40.3	2.89	61.7	3.35	20.6	5.21	26200

FST 100 YEARS

PROJECT Rutland, VT

SUBJECT Steel Truss Bridge
Floorbeams In Section

PROJECT NUMBER VQ-093
SHEET NUMBER 14
DATE 2/25/15
COMPUTED BY MAB
CHECKED BY TD

Transform Concrete to Steel.

$79.2_{in} \div 8 = 9.9_{in}$

$S_{steel} = 291\ in^3$

$d = 24.3_{in}$ total depth (zero haunch) = 34.3_{in}

$A_s = 34.4_{in}^2$

LRFD 6.10.1.1.1 b States that Concrete in tension is not effective. This Complicates things if the neutral axis is in the slab. which it is.

guess $\bar{Y} = 24.89\ in$

then effective transformed Concrete area = $(34.3_{in} - 24.89_{in})(9.9_{in})$
$a_c = 93.16\ in^2$

effective depth of Concrete = $34.3_{in} - 24.89_{in} = 9.41_{in}$

FST 100 YEARS

PROJECT Rutland, VT

PROJECT NUMBER VQ-093

SHEET NUMBER 15

DATE 2/25/15

COMPUTED BY MAB

CHECKED BY TD

SUBJECT Steel Truss Bridge
Floorbeams In Section

Compute $\bar{Y}$

$$\bar{Y} = \frac{\left(34.3_{in} - 9.41_{in}/2\right)\left(93.16_{in}^2\right) + \left(34.4_{in}^2\right)\left(24.3_{in}/2\right)}{34.4_{in}^2 + 93.16_{in}^2}$$

$\bar{Y} = 24.89_{in}$ what an amazing guess!

$I_{steel} = 3540\ in^4$

$$I_{in} = 3540_{in}^4 + 34.4_{in}^2 \cdot \left(24.89_{in} - 24.3_{in}/2\right)^2 + \frac{1}{12}(9.9_{in})(9.41_{in})^3 \ldots$$
$$\ldots + (93.16_{in}^2)\left(34.3_{in} - 9.41_{in}/2 - 24.89_{in}\right)^2$$

$I_{in} = 11{,}873\ in^4$

$$S_{in\ (bottom\ flange)} = \frac{11{,}873\ in^4}{24.89_{in}} = 477\ in^3$$

$$\underline{\underline{S_{in} = 477\ in^3}}$$

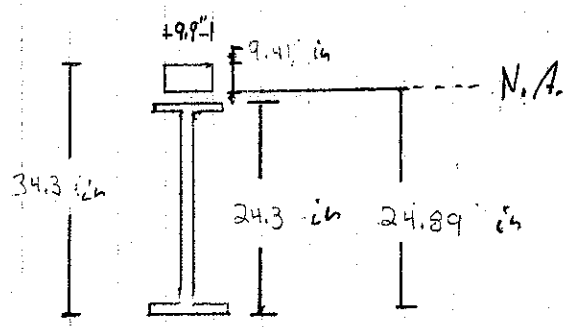

FST 100 YEARS

PROJECT Rutland, VT

SUBJECT Steel Truss Bridge
Floorbeams 3h Section

PROJECT NUMBER VQ-093
SHEET NUMBER 16
DATE 2/25/15
COMPUTED BY MAB
CHECKED BY TD

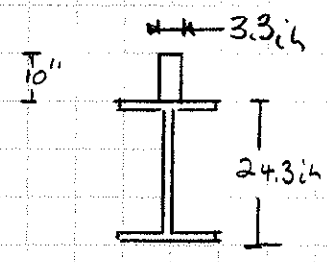

$79.2\,in \div (3 \cdot 8) = 3.3\,in$

$A_c = 33\,in^2$

$$\bar{Y} = \frac{(33\,in^2)(29.3\,in) + (34.4\,in^2)(12.15\,in)}{33\,in^2 + 34.4\,in^2}$$

$$\bar{Y} = 20.55\,in$$

$$I_{3h} = (1/12)(3.3\,in)(10\,in)^3 + (33\,in^2)(29.3\,in - 20.55\,in)^2 + 3540\,in^4 \ldots$$
$$\ldots + (34.4\,in^2)(20.55\,in - 12.15\,in)^2$$

$$I_{3h} = 8769\,in^4$$

$$S_{3h} = 8769\,in^4 \div 20.55\,in = \underline{427}\,in^3$$

S_{steel}	=	$291\,in^3$
S_{1h}	=	$477\,in^3$
S_{3h}	=	$427\,in^3$

FST 100 YEARS

PROJECT Rutland, VT

SUBJECT Steel Truss Bridge
Floorbeams

PROJECT NUMBER VA-093
SHEET NUMBER 17
DATE 2/25/15
COMPUTED BY MAB
CHECKED BY TD

Strength I Moments

M_{DC1} = non-Composite dead load moment.
Comes from Steel + wet Concrete weight

$$M_{DC1} = (1/8)(0.117\,klf)(33.5\,ft)^2 + 1/8\,(1.78\,klf)(30.5\,ft)^2 + \ldots$$
$$\ldots (1.78\,klf)(30.5\,ft \cdot 1/2)(1.5\,ft)$$

$$M_{DC1} = 264.1\ ft \cdot k$$

M_{DC2} = Composite Dead load Moment
Comes from the remainder of the dead loads

$$M_{DC2} = 339.4\,ft \cdot k - 264.1\,ft \cdot k$$

$$M_{DC2} = 75.3\,ft \cdot k$$

M_{LL} = Live Load Moment

$$M_{LL} = 85.5\,ft \cdot k + 644.0\,ft \cdot k = 729.5\,ft \cdot k$$

σ_{max} = Max Strength I bottom flange tensile Stress

$$\sigma_{max} = \frac{(1.25)(264.1\,ft \cdot k)(12\,in/ft)}{291\,in^3} + \frac{(1.25)(75.3\,ft \cdot k)(12\,in/ft)}{427\,in^3} \ldots$$

$$\ldots + \frac{(1.75)(729.5\,ft \cdot k)(12\,in/ft)}{477\,in^3}$$

$\sigma_{max} = 48.4$ KSi $\qquad \phi_{flexure} = 1.0 \quad \therefore \quad 48.4 < 50$ o/k

FST 100 YEARS

PROJECT Rutland, VT

SUBJECT Steel Truss Bridge

Exterior Floorbeams Loads

PROJECT NUMBER Va-093

SHEET NUMBER 18

DATE 2/25/15

COMPUTED BY MAB

CHECKED BY TD

- The exterior floorbeams are loaded differently than the interior ones. The dead load is slightly greater than half, the truck loads are the same, and the lane loads are half. At the same time, the section modulus is less because there is less deck effective.

$$M_{DC1} = \left(\frac{1.78\ kif}{2}\right)(1/8)(30.5\ ft)^2 + (30.5\ ft)(1/2)(1.78\ kif)(1/2)(1.5\ ft) \ldots$$
$$\ldots + 1/8\,(0.117\ kif)(33.5\ ft)^2$$

$$M_{DC1} = 140.3\ ft \cdot k$$

$$M_{DC2} = (1/2)(75.3\ ft \cdot k - 69.9\ ft \cdot k) = 2.7\ ft \cdot k$$

↑ No vertical @ end ∴ No notional load.

$$M_{Lane} = (1/2)(85.5\ ft \cdot k) = 42.8\ ft \cdot k$$

$$M_{tandem} = 644\ ft \cdot k$$

$$M_{LL} = 42.8\ ft \cdot k + 644\ ft \cdot k = 686.8\ ft \cdot k$$

FST 100 YEARS

PROJECT Rutland, VT

PROJECT NUMBER VQ-093

SUBJECT Steel Truss Bridge
Exterior floorbeam Properties

SHEET NUMBER 19

DATE 2/25/15

COMPUTED BY MAB

CHECKED BY TD

$S_{steel} = 291\ in^3$

take the Section as follows:

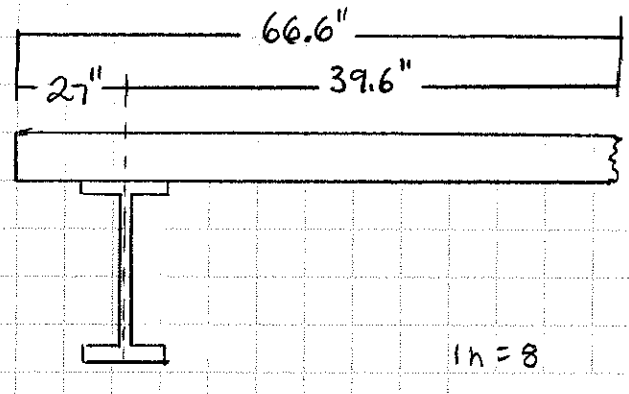

1n = 8

3n = 24

1n SECTION TRANSFORMED:

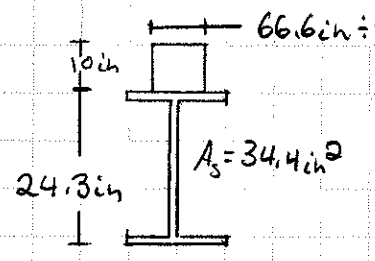

$A_c = (8.325\ in)(10\ in) = 83.25\ in^2$

$$\bar{Y} = \frac{(34.4\ in^2)(12.15\ in) + (83.25\ in^2)(29.3\ in)}{34.4\ in + 83.25\ in}$$

$\bar{Y} = 24.3\ in$

$I_{steel} = 3540\ in^4$

$$I_{1n} = 3540\ in^4 + \tfrac{1}{12}(8.325\ in)(10\ in)^3 + (83.25\ in^2)(5\ in)^2 \ldots$$
$$\ldots + (34.4\ in^2)(12.15\ in)^2$$

$I_{1n} = 11{,}393\ in^4$

$S_{1n} = 11{,}393\ in^4 \div 24.3\ in = \underline{469\ in^3}$

3n Transformed Section:

transformed Slab width = 66.6in ÷ 24 = 2.8in

$A_c = 28 in^2$

$$\bar{Y} = \frac{(28 in^2)(29.3 in) + (34.4 in^2)(12.15 in)}{28 in^2 + 34.4 in^2}$$

$\bar{Y} = 19.8 in$

$|d_{concrete}| = 29.3 in - 19.8 in = 9.5 in$

$|d_{steel}| = 19.8 in - 12.15 in = 7.7 in$

$I_{3n} = 3540 in^4 + (1/12)(2.8 in)(10 in)^3 + (28 in^2)(9.5 in)^2 + (34.4 in^2)(7.7 in)^2$

$I_{3n} = 8340 in^4$

$S_{3n} = 8340 in^4 \div 19.8 in = \underline{421} in^3$

Strength I tensile stress = σ_{max}

$$\sigma_{max} = \frac{(1.25)(146.3 ft{\cdot}k)(12 in/ft)}{291 in^3} + \frac{(1.25)(2.7 ft{\cdot}k)(12 in/ft)}{421 in^3} + \frac{(1.75)(686.8 ft{\cdot}k)(12 in/ft)}{469 in^3}$$

$\sigma_{max} = 38.1 ksi < 50 ksi$ ok

FST 100 YEARS

PROJECT Rutland, VT

PROJECT NUMBER VQ-093

SHEET NUMBER 21

DATE 2/25/15

COMPUTED BY MAB

CHECKED BY TD

SUBJECT Steel Truss Bridge
Floorbeam Shear

LRFD 6.10.3.3

$V_u \leq \phi_v V_{cr}$

$\phi_v = 1.0$ 6.5.4.2 LRFD

$V_u = 169.7$ K

$V_{cr} = C V_p$ LRFD 6.10.9.3.3-1

$V_p = 0.58 F_y D t_w$ LRFD 6.10.9.3.3-2

$D = 24.3in - (2)(0.85in) = 22.6in$

$t_w = 0.55in$

$V_p = (0.58)(50ksi)(22.6in)(0.55in) = 360.5K$

$K = 5$

$$1.12\sqrt{\frac{EK}{F_y}} = 1.12\sqrt{\frac{(29{,}000\,ksi)(5)}{(50\,ksi)}} = 60.3$$

$$1.4\sqrt{\frac{EK}{F_y}} = 75.4$$

$$D/t_w = 22.6/0.55 = 41.1$$

$$D/t_w < 1.12\sqrt{\frac{EK}{F_y}} \therefore C = 1.0$$ LRFD 6.10.9.3.2-4

$V_{cr} = V_p$

FST 100 YEARS

PROJECT Rutland, VT

PROJECT NUMBER VQ-093

SHEET NUMBER 22

SUBJECT Steel Truss Bridge
Floorbeam Shear

DATE 2/25/15

COMPUTED BY MAB

CHECKED BY TD

$\phi V_{cr} = V_p$

$V_u = 169.7k < 360.5k = \phi V_{cr}$

ok for shear

FST

PROJECT Rutland VT

SUBJECT Steel Truss Bridge
Floorbeam Shear Studs.

PROJECT NUMBER Va-093
SHEET NUMBER 23
DATE 11/19/14
COMPUTED BY MAB
CHECKED BY TD

LRFD 6.10.10.1.2-1 $\quad P \le \frac{n Z_r}{V_{sr}}$

$V_{sr} = \sqrt{(V_{fat})^2 + (F_{fat})^2}$ LRFD 6.10.10.1.2-2

$F_{fat} = \text{Max}\left(\frac{A_{bot}\,\sigma_{flg}\,l}{w\,R}, \frac{F_{rc}}{w}\right)$ LRFD 6.10.10.1.2-4 & 5

$R = \infty \qquad \frac{A_{bot}\,\sigma_{flg}\,l}{\infty} = 0$

$F_{rc} = 0$

$F_{rc}/w = 0$

$V_{sr} = V_{fat}$

V_{fat} = longitudinal fatigue shear range per unit length

$\gamma_{Fatigue} = 1.5$

Fatigue Load = Single truck with constant 14 ft axle spacings.

Use lever rule

by inspection, minimum fatigue limit state shear stress $= 0$

FST 100 YEARS

PROJECT Rutland, VT

SUBJECT Steel Truss Bridge
Floorbeam Shear Studs

PROJECT NUMBER VQ-093
SHEET NUMBER 24
DATE 2/25/15
COMPUTED BY MAB
CHECKED BY TD

Factored max shear = $(1.5)(39.6k)(1/1.2)(1.15/1.33) = 42.8K$

γ_{fat} — shear from page 7 — Remove multiple Presence — Impact Ratio

Q for short term composite section: (Interior FB controls)

$Q = (9.9\,in)(10\,in) \cdot (9.41\,in - 5\,in) = 436.6\,in^3$

$V_{min} = 0$

Shear Range = 42.8K

$V_{sr} = V_{fat}$

$V_{fat} = \frac{V_f Q}{I}$ LRFD 6.10.10.1.2-3

$I = 11{,}873\,in^4$

$V_{fat} = \frac{(42.8k)(436.6\,in^3)}{11{,}873\,in^4} = 1.57\,k/in = V_{sr}$

$P \le \frac{n Z_r}{V_{sr}}$

$n = 2$

$S_{1/4}'' = (6)\,7/8'' < P < 24\,in$ 6.10.10.1.2

$Z_r = 5.5\,d^2$ for infinite life

$Z_r = (5.5)(7/8\,in)^2 = 4.2K$ (6.10.10.2-1)

(ADTT = 190)

FST 100 YEARS

PROJECT Rutland, VT

SUBJECT Steel Truss Bridge
Floorbeam shear studs

PROJECT NUMBER VQ-093
SHEET NUMBER 25
DATE 2/25/15
COMPUTED BY MAB
CHECKED BY TD

$$P \leq \frac{(2)(4.2k)}{1.57\ k/in}$$

$$P \leq 5.35\ in$$

Min Spacing is 5.25 in

Use 5.25 in Stud Spacing at the ends of the floorbeams.

- Consider a wider pitch at some point along the floorbeam.

where can P = 6 in?

$$6in \leq \frac{(2)(4.2k)}{(V_{sr}')}$$

$$V_{sr}' \leq 1.4\ k/in$$

$$V_{sr}' = \frac{V_f'\ Q}{I} = 0.0368\ V_f' = 1.4\ k/in$$

$$V_f' = 38.1\ k$$

Factored Fatigue wheel F8 Reaction for infinite life = $P_{ufat\ 1}$ = fatigue wheel load in this case.

$$P_{ufat\ 1} = (16k)(1.15)(\gamma_L = 1.5) = 27.6k$$

FST 100 YEARS

PROJECT Rutland, VT

SUBJECT Steel Truss Bridge
Floorbeam Shear Studs

PROJECT NUMBER VQ-093
SHEET NUMBER 26
DATE 2/26/15
COMPUTED BY MAB
CHECKED BY TD

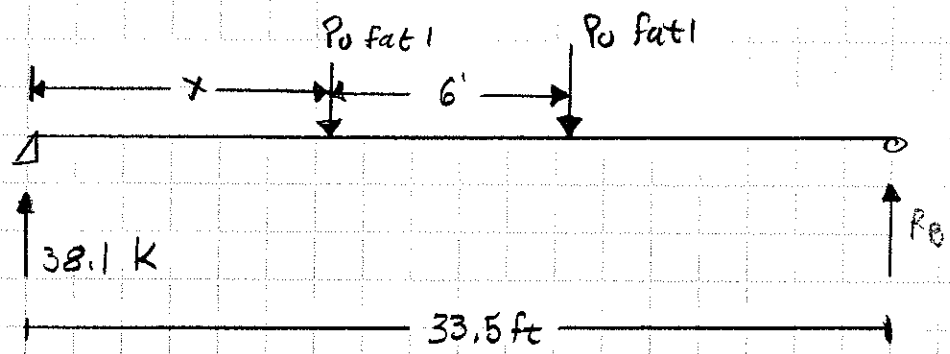

$$38.1k = \frac{27.6k\,(33.5ft - x + 33.5ft - (x+6))}{33.5\ ft}$$

$$38.1k = \frac{1683.6\ k\cdot ft - 55.2x}{33.5}$$

$$x = 7.4\ ft$$

at 7.4ft from the ℄ truss, the Shear Stud Pitch can be changed to 6 in.

The deck is 30ft-6in wide.

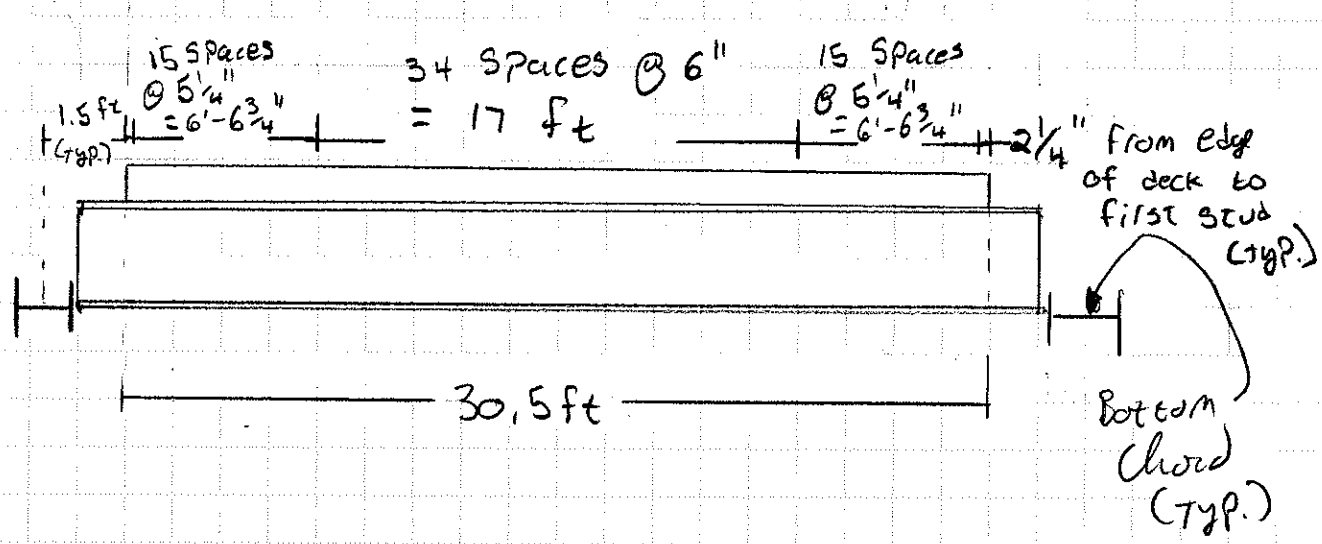

FST 100 YEARS

PROJECT Rutland, VT

SUBJECT Steel Truss Bridge
Floorbeam Shear Studs

PROJECT NUMBER VQ-093
SHEET NUMBER 27
DATE 2/26/15
COMPUTED BY MAB
CHECKED BY TD

Total number of shear studs = (15 + 34 + 15 + 1)(2)

# of Studs = 130 studs.

Strength limit State

LRFD 6.10.10.4

$n \geq P/Q_r$

$Q_r = \phi_{sc} Q_n$

$\phi_{sc} = 0.85$ LRFD 6.5.4.2

$R = \infty \therefore P = P_p = Min(P_{1p}, P_{2p})$

$P_{1p} = 0.85 f'_c b_s t_s$

$f'_c = 4$ ksi $b_s = 79.2$ in $t_s = 10$ in

$P_{1p} = (0.85)(4 ksi)(79.2 in)(10 in) = 2692.8 K$

$P_{2p} = A_s F_y = (34.4 in^2)(50 ksi) = 1720 K$

$P = 1720 K$

FST 100 YEARS

PROJECT Rutland, Vt

SUBJECT Steel Truss Bridge
Floorbeam Shear Studs

PROJECT NUMBER VQ-093
SHEET NUMBER 28
DATE 2/26/15
COMPUTED BY MAB
CHECKED BY TD

$$Q_n = 0.5\, A_{sc} \sqrt{f'_c E_c} \le A_{sc} F_u$$

take $F_u = 50$ ksi

$$E_c = 33{,}000 (0.145)^{1.5} \sqrt{4\text{ ksi}} = 3644 \text{ ksi}$$

$$A_{sc} = \left(\tfrac{7}{8}\text{ in}\right)^2 \tfrac{\pi}{4} = 0.60 \text{ in}^2$$

$$Q_n = (0.5)(0.6\text{ in}^2)\sqrt{4\text{ ksi} \cdot 3644\text{ ksi}} \le (0.6\text{ in}^2)(50\text{ ksi})$$

$$Q_n = 36.2\text{ k} \le 30\text{ k}$$

$$Q_n = 30\text{ k}$$

$$\phi Q_n = Q_r = (0.85)(30\text{ k}) = 25.5\text{ k/stud}$$

$$n = \left(\tfrac{1}{2}\right)(130\text{ studs}) = 65\text{ studs}$$

$$65\text{ studs} \not> \frac{1720\text{ k}}{25.5\text{ k/stud}} = 68\text{ studs}$$

need to add 2 more spaces of studs

use $5\tfrac{1}{4}$ in spacing the whole way

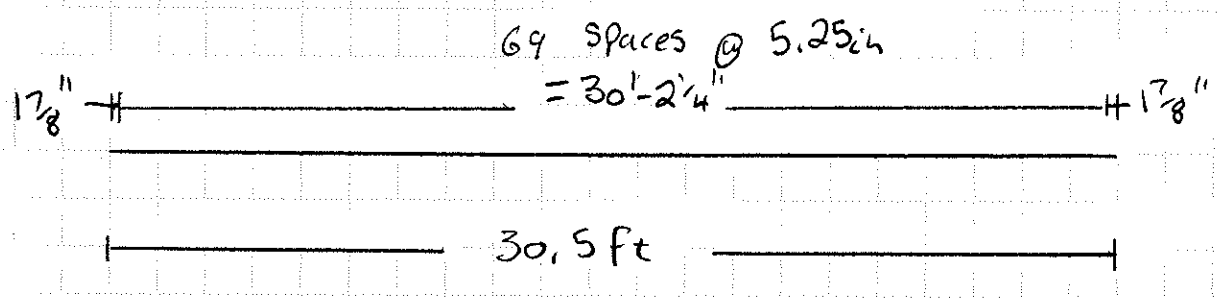

FST 100 YEARS

PROJECT Rutland, VT

SUBJECT Steel T truss Bridge
Floorbeam Shear Studs.

PROJECT NUMBER VQ-093
SHEET NUMBER 29
DATE 2/26/15
COMPUTED BY MAB
CHECKED BY TD

Studs = (69 + 1) = 70 Studs

70 Studs > 68 Studs OK.

H. SIDEWALK AND UTILITY SUPPORTS DESIGN

SUPERSTRUCTURE DESIGN CALCULATIONS FOR BRIDGE #17, RUTLAND, VT

SS1

SEWER SUPPORT ARM

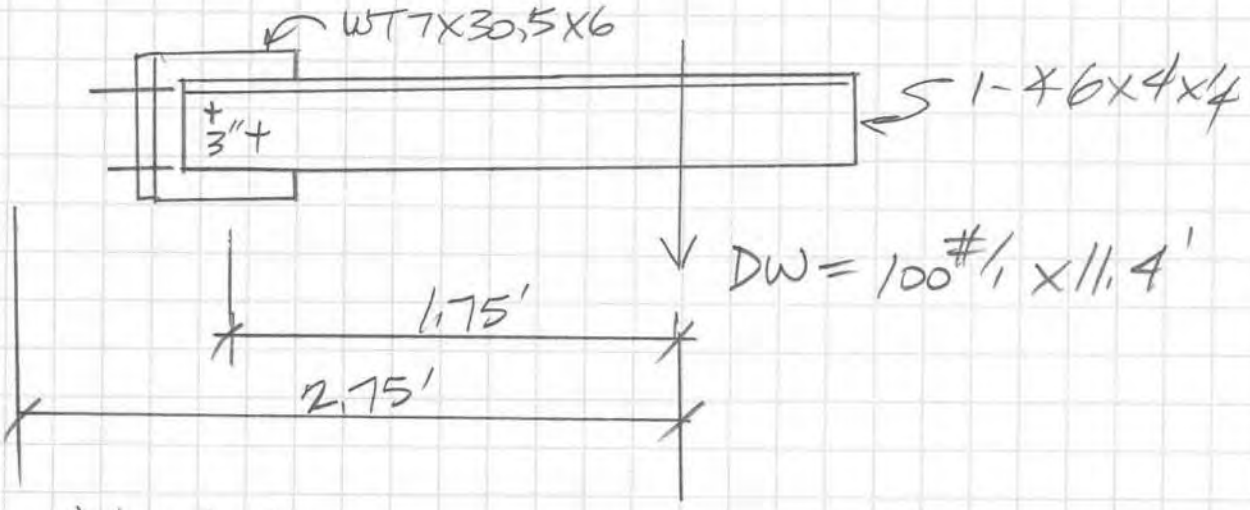

∠6x4x1/2 $S = 4.33 in^3$

$M_u = (1.5)\,100^{\#}/'(11.4')1.75' = 2993'\#$

$M_u/S = \frac{2993(12)}{4.33} = 8.3\ ksi$

$\ll \phi F_y = 45\ ksi$

BOLTS $J = \Sigma x^2 + \Sigma y^2$

$= 2(1.25^2) + 2(1.25^2)$

$= 6.25 in^2$

$M = 100^{\#}/'(11.4')1.75' = 1995'\# = 23940^{k''}$

$V = 100(11.4) = 1140^{\#}$

↓ BOLT FORCE $V_y = V/N + Mx/J = \frac{1140}{2} + \frac{(23940)1.25}{6.25} = 5.4^k$

→ BOLT FORCE $V_x = My/J = 4.8^k$

$V_r = (V_x^2 + V_y^2)^{1/2} = 7.2^k < 12.2^k$ SVCII ϕR_n

$7.2(1.5) = 10.8^k < 27.7^k$ STRI ϕR_n

BOLTS: USE 2-7/8" ϕ A325 OR

FST

PROJECT

PROJECT NUMBER

SHEET NUMBER

SUBJECT

DATE

COMPUTED BY TD

CHECKED BY

SW1

SIDEWALK SUPPORT FRAMING

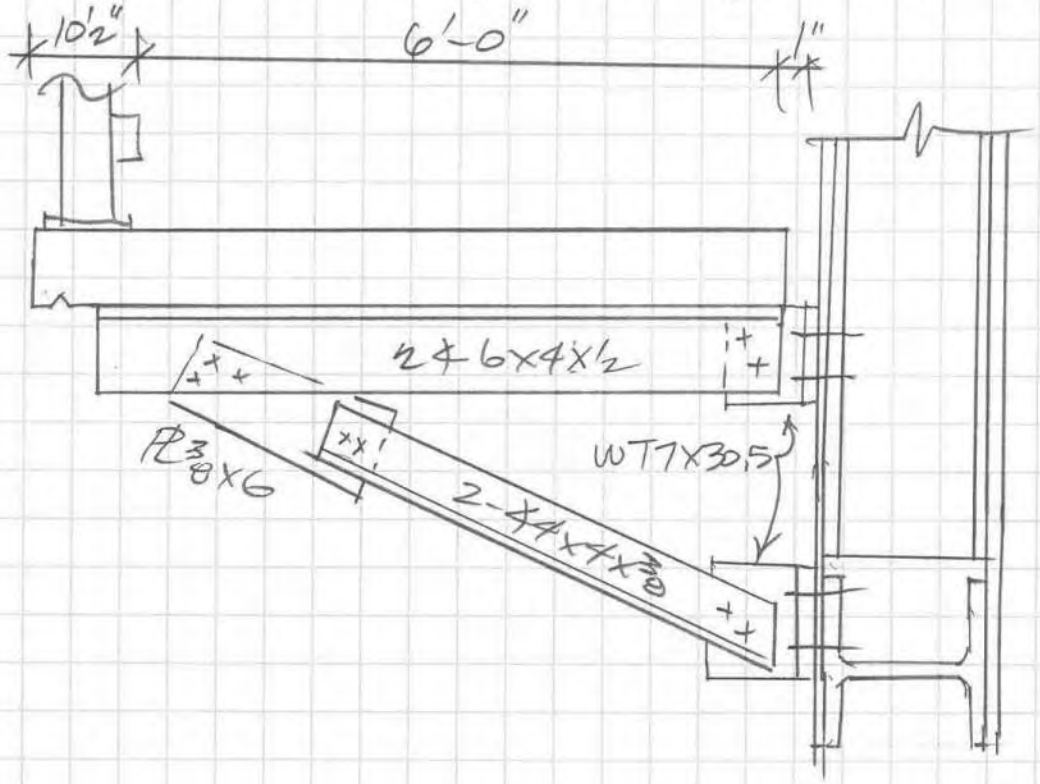

FST

PROJECT

SUBJECT

PROJECT NUMBER

SHEET NUMBER

DATE

COMPUTED BY TD

CHECKED BY

SW2

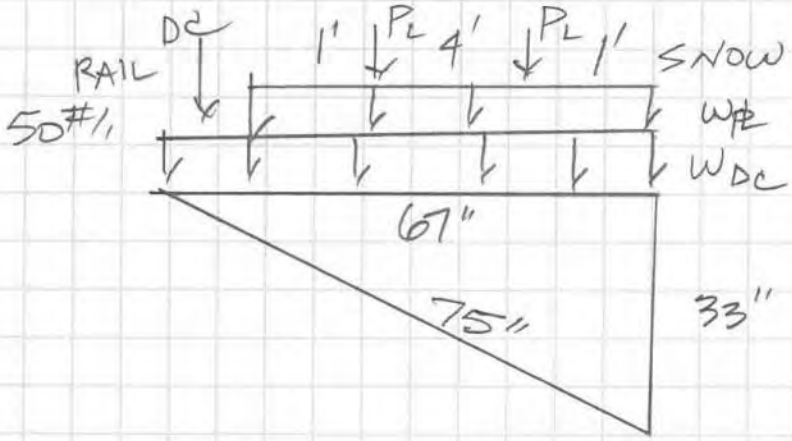

$$P_L = 2.5^k + (11.4 - 4)\frac{2.5^k}{11.4} = 4.1^k \text{ @ SUPPORT}$$

$2.5^k + \quad + 2.5^k$

$4' \times 4'$

$2.5^k + \quad + 2.5^k$

SNOW VEH $V_L = 4.1^k(2) = 8.2^k$ $\quad M_L = 8.2^k\, 3' = 24.6^{'k}$

PED LIVE $V_{PL} = 75\,psf\,(11.4')\,6' = 5.1^k$ $\quad M_{PL} = 5.1^k\, 3' = 15.3^{'k}$

DEAD DC $V_{DC} = \left[50^{\#} + \frac{7''}{12}150(7')\right] \times 11.4' = 7.6^k$

$$M_{DC} = \left(50^{\#}(6.5') + (6125)\frac{7'}{2}\right]11.4' = 28.1^{'k}$$

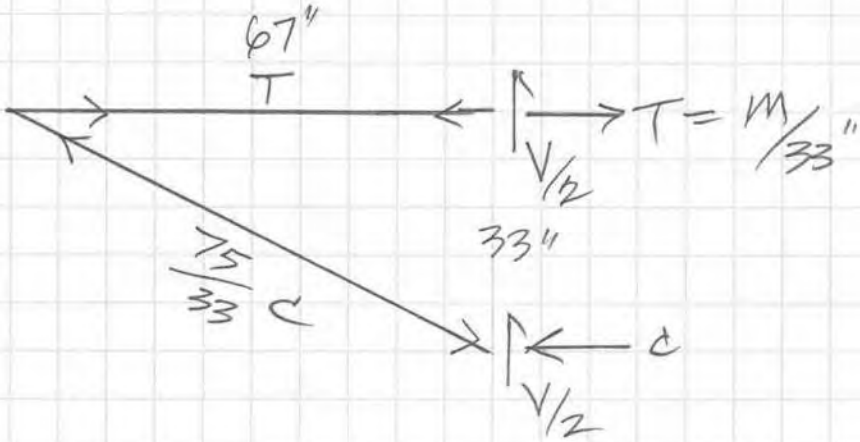

FST

PROJECT

SUBJECT

PROJECT NUMBER

SHEET NUMBER

DATE

COMPUTED BY TB

CHECKED BY

SW3

$T_u = C_u$

SVCII $T = [1.3(24.6) + 1.0(28.0)]\,12/33'' = 21.8^k$

$\rightarrow$ BOLT SHEAR $= 21.8^k / 2$ BOLTS $= 10.9^k$

SVCII $V = [1.3(8.2) + 1.0(7.6)] = 18.3^k$

$\downarrow$ BOLT SHEAR $= 18.3^k / 4$ BOLTS $= 4.5^k$

$V_r = (10.9^2 + 4.5^2)^{1/2} = 11.8^k < 12.2^k$ ok
ϕR_n

STRI $T = [1.75(24.6) + 1.25(28.0)]\,12/33 = 28.4^k$

$\rightarrow$ BOLT SHEAR $= 28.4/2 = 14.2^k$

STRI $V = 1.75(8.2) + 1.3(7.6) = 24.2^k$

$\downarrow$ BOLT $V = 24.2/4 = 6.1^k$

$V_r = 14.2^2 + 6.1^2 = 15.4^k < 27.7^k$
ϕR_n

BOLTS ok

STRI $C_u = 28.4^k \; 75/67$
$= 43^k$

P_u/A_g WT $= \dfrac{43}{3/8(6)}$
$= 19$ ksi ok

2-L4x4x3/8

$A = 6\,in^2$ $\quad C_u/A = 7.2$ ksi

$Kl/r = (1.2)\,75''/1.23 = 73$ $\quad \phi P_r/A_g = 32$ ksi
ok

I. DECK DESIGN

SUPERSTRUCTURE DESIGN CALCULATIONS FOR BRIDGE #17, RUTLAND, VT

FST

PROJECT Rutland, VT

PROJECT NUMBER VQ-023

SHEET NUMBER 1

DATE 10/17/01

COMPUTED BY MAB

CHECKED BY TD

SUBJECT Truss

Dead Loads

10" Deck + 2½" Wearing Surface (VTrans Structures Manual [VSM] 3.3.2)

$(12.5/in)(1ft/12in)(0.15\ KCf) = 0.156\ KSf$

2" haunch $(2in)(1/12)(0.15)(1.08ft) = 0.027\ KIF$

Short Span floorbeam Spacing = 11'-4½in

Long Span floorbeam Spacing = 11' - 1.2in

Deck Load to interior Short Span floor beam
$0.027 + (11.375\ ft)(0.156\ KSf) = 1.80\ KIf$

Deck Load to exterior (end) Short Span truss floor beam
$= (1.80 + 0.027)(1/2) = 0.91\ KIf$

Deck load to interior long Span truss floorbeam
$= 0.027 + (11.1ft)(0.156\ KSf) = 1.76\ KIf$

Deck load to exterior long Span truss floorbeam
$= 0.89\ KIf$

Curb, rail, + utility weights will be added as point loads.

Curb: $(10")(15")(1ft^2/144in^2)(0.15\ KCf) = 0.156\ KIf$

Short Span interior Panel Point load = SSIPPL

$SSIPPL = (0.156\ KIf)(11.375ft) = 1.77\ K$
$SSEPPL = 0.89\ K$

FST

PROJECT Rutland, VT

PROJECT NUMBER VR-093

SHEET NUMBER 2

DATE 10/20/14

COMPUTED BY MAB

CHECKED BY TD

SUBJECT Truss

Dead Loads

LS I PPL = (0.156 K/f)(11.1 ft) = 1.73 K
LS E PPL = 0.866 K

Take the rail weight to be ≥ 80 plf (at each of 3 points)

Load @ each interior Panel Point then = (0.08 K/f)(11.4 ft) = 0.9 K
Exterior = 0.45 K

These loads will be considered DC2.

Utility loads.

8" Pipe (iron) full of water weighs 50 plf ±
add 15% for hardware

Utility load to interior Panel Point = (11.4 ft)(0.05 K/f)(1.15)
= 0.66 K
Exterior = 0.33 K

DC2 Point Loads

Interior SS Sidewalk Point	1.56
Exterior SS " "	0.78
Interior LS Sidewalk Point	1.53
Exterior LS " "	0.76
Interior SS Panel Point	2.67
Exterior SS " "	1.34
Interior LS " "	2.62
Exterior LS " "	1.31
Interior SS Utility from Point	0.66 K
Exterior SS " " "	0.33 K
Interior LS " " "	0.64 K
Exterior LS " " "	0.32 K

FST

PROJECT Rutland VT

PROJECT NUMBER VQ-093

SHEET NUMBER 3

SUBJECT Truss

DATE 10/20/14

COMPUTED BY MAB

Live Load

CHECKED BY TD

The first distributed live load shall be positioned starting 4.5 ft from the ℄ of the pedestrian side truss.

For an interior floorbeam in the shorter truss the value of the distributed load along it = SSIFBLL

SSIFBLL = (0.64 klf)(11.375 ft) ÷ 10 ft = 0.728 klf
SSEFBLL = SSIFBLL ÷ 2 = 0.364 klf

LSIFBLL = (0.64 klf)(11.1 ft) ÷ 10 ft = 0.710 klf
LSEFBLL = 0.355 klf

Floor beam Live Load example

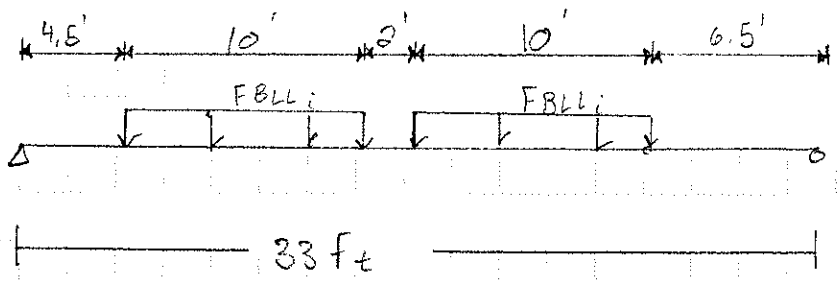

DECK DESIGN

FST

PROJECT Rutland, VT

PROJECT NUMBER VQ-093

SHEET NUMBER 1

SUBJECT Steel Truss

DATE 10/24/14

Ripley Road Over Otter Creek

COMPUTED BY MAB

CHECKED BY TD

AASHTO LRFD Bridge Design Specification 6th Ed. (LRFD)

4.6.2.3 Equivalent Width for Slab type Bridges,

(Per 5.14.4.1 slabs designed for moment based on 4.6.2.3 need not be checked for shear)

Single lane:

$$E = 10 + 5\sqrt{L_1 W_1} = 10 + 5\sqrt{11.375 \cdot 30} = 102.4 \text{ in}$$

Multiple Lanes:

$$E = 84 + 1.44\sqrt{L_1 W_1} \leq \frac{12W}{N_L}$$

$$\frac{12W}{N_L} = \frac{(12)(30.5)}{(2)} = 183$$

$$84 + 1.44\sqrt{L_1 W_1} = 84 + 1.44\sqrt{(11.375)(30.5)} = 110.8 \text{ in}$$

E = 110.8 in for multi-lane.
(per lane)

<u>102.4 in Controls</u> width. (accounts for multi-presence factor)

LRFD Table 4.6.2.1.3-1

+M $E = 26 + 6.6S = 26 + 6.6(11.375) = 101.1$ in

−M $E = 48 + 3.0S = 48 + 3(11.375) = 82.1$ in

4.6.2.1 is more conservative ∴ use it.

FST

PROJECT Rutland, VT

PROJECT NUMBER VQ-093

SHEET NUMBER 2

SUBJECT Steel truss

DATE 10/24/14

COMPUTED BY MAB

Ripley Road over Otter Creek.

CHECKED BY TD

LRFD 4.6.2.1.4b Longitudinal Edges.

+M Edge Strip width = $15_{in} + 12_{in} + 101.1_{in}/4 \leq 101.1/2 \leq 72$

$= 52.3 \leq 50.6_{in} \leq 72$

$= 50.6_{in}$

−M Edge Strip width = $15_{in} + 12_{in} + 82.1/4 \leq 82.1/2 \leq 72$

$= 47.5_{in} \leq 41.1_{in} \leq 72$

$= 41.1$ in

Deck Strip Summary

	Interior Strip	Edge Strip
Positive moment width	101.1 in	50.6 in
Negative moment width	82.1 in	41.1 in
Loading description	Single lane	Single line of wheels plus appropriate fraction of distributed lane load. 4.6.2.1.4b

FST

PROJECT Rutland, VT

PROJECT NUMBER 10-093

SUBJECT Steel Truss

SHEET NUMBER 3

DATE 10/24/10

COMPUTED BY MAB

CHECKED BY TD

Ripley Road over Otter Creek

Interior Positive Moment Strip Dead Load:

$$= (101.1\,in)(12.5\,in)\left(\frac{1\,ft^2}{144\,in^2}\right)(0.15\,kcf)$$

$$= 1.32\,k/ft$$

Edge Positive Moment Strip Dead Load:

$$= \left((50.6\,in)(12.5\,in) + \overbrace{(10\,in)(14.5\,in)}^{Curb}\right)\cdot\left(\frac{1\,ft^2}{144\,in^2}\right)(0.15\,kcf) + \overbrace{0.08\,klf}^{Rail}$$

$$= 0.89\,klf$$

Interior Negative Moment Strip Dead Load:

$$= (82.1\,in)(12.5\,in)\left(\frac{1\,ft^2}{144\,in^2}\right)(0.15\,kcf)$$

$$= 1.07\,k/ft$$

Edge Negative Moment Strip Dead Load:

$$= \left((41.1\,in)(12.5\,in) + (10\,in)(14.5\,in)\right)\cdot\left(\frac{1\,ft^2}{144\,in^2}\right)(0.15\,kcf) + 0.08\,klf$$

$$= 0.77\,klf$$

FST

PROJECT Rutland, VT

SUBJECT Steel Truss

Ripley Road over Otter Creek.

PROJECT NUMBER VQ-093

SHEET NUMBER 4

DATE 10/24/14

COMPUTED BY MAB

CHECKED BY TD

Positive moment Edge Strip Live Load.

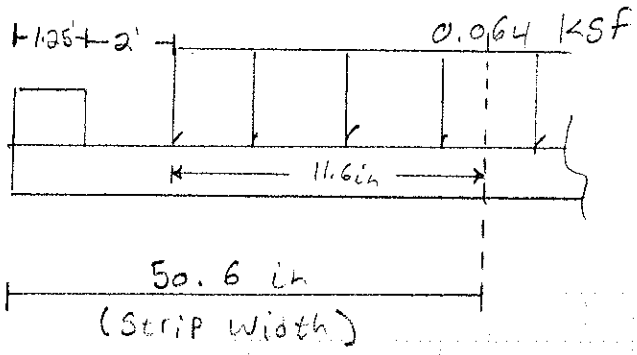

$50.6in - 24in - 15in = 11.6in$

$$\text{Line Load} = \frac{(11.6in)(1ft/12in)}{(10\ ft)} \cdot 0.64\ KIF = 0.062\ KIF$$

Lane Load on Positive moment edge Strip = 0.062KIF

for negative moment:

$$\text{Lane Load on edge Strip} = \frac{(41.1in - 39in)(1/12)}{10} \cdot 0.64KIF = 0.011\ KIF$$

VQ-093
Rutland, VT
Steel Truss: Ripley Road ovar Otter Creek

5

Single Design Lane 1 of 8
(Interior Strip)

Analysis ID = 4

Loading Type: Live Load		Units				
Modulus of Elasticity (E)		Force		Length		
		All input parameters must be in consistent units. Output values are in the same units as input.		Units used to specify span L are considered master units. Master units are used for all input and output data except parameters on the right are in sub units. Specify number of sub units per one master unit in the Master/Sub field (e.g. 1000 for m/mm or 12 for ft/in).	Parameter	Master/Sub
$E = Eo \times 10^x$					L (sub)	1
					E (force/sub²)	1
					Sefl. (sub)	1
Eo =	1	Force Unit Name:	kip	Master Length Unit Name: feet	Defl. (sub)	1
X =	1	Note: Force and master length unit names above have no effect on analysis and are for information only.				

	Supports									
	Supp 1	Supp 2	Supp 3	Supp 4	Supp 5	Supp 6	Supp 7	Supp 8	Supp 9	Supp 10
Type	pin	pin	pin	pin	pin	pin	pin	pin	pin	

		Spans								
		Span 1	Span 2	Span 3	Span 4	Span 5	Span 6	Span 7	Span 8	Span 9
Segment 1	L	11.375	11.375	11.375	11.375	11.375	11.375	11.375	11.375	
	I	1	1	1	1	1	1	1	1	
Segment 2	L									
	I									
Segment 3	L									
	I									
Segment 4	L									
	I									
Segment 5	L									
	I									
Segment 6	L									
	I									
Segment 7	L									
	I									
Segment 8	L									
	I									
Segment 9	L									
	I									
Segment 10	L									
	I									
Segment 11	L									
	I									
Segment 12	L									
	I									
Segment 13	L									
	I									
	Span L =	11.375	11.375	11.375	11.375	11.375	11.375	11.375	11.375	0

Live Load --> Lane (UDL) combined with Truck or Tandem

Use lana combined with truck or tandem, whichever produce maximum adverse force affect

Lana Loading:

UDL = 0.64

Truck Loading:

Lead axle P1 = 8
axla P2 = 32
axle P3 = 32
P1/P2 Spa = 14
P2/P3 Spa = vary 14 to 30

Tandem Loading:

axla P = 25
axla Spa = 4

VQ-093
Rutland, VT
Steel Truss: Ripley Road over Otter Creek

In addition to lane combined with single truck/tandem, calculate moments in (-)M regions and max reactions at intermediate supports due to lene combined with two trucks placed in critical locations in adjacent to intermediate support spans. Do the same for two tandems. The following applies:

2-Trucks:

Constant P2/P3 Spa =	14
Min spa between 2nd trk lead/1st trk reer exles =	50
[Lane+Double Trk] Reduct Factor (except react) =	0.9
[Lane+DoubleTrk] Reaction Reduct Factor =	0.9

2-Tendems:

Axle P =	25
Min spa between tandems =	26
Mex spa between tandems =	40
[Lane+Double Tnd] Reduct Factor (except react) =	1
[Lane+DoubleTnd] Reaction Reduct Factor =	1

Load Multipliers:

Lane m =	1
Truck/Tandem m =	1.33

Specified Option: Neglect axles that reduce adverse force effects

Note:
Live Load is based on HL-93 (AASHTO LRFD) loading

Max LL Vertical Reactions & Corresponding Rotations

	----Max Reactions----		----Min Reactions----	
Support	max R	Rotation	min R	Rotation
1	55.32	-24.1198	-4.82	10.3697
2	72.37	4.5050	-7.75	5.5570
3	70.93	-0.0628	-13.83	-0.7647
4	71.07	0.0215	-12.75	0.0142
5	71.01	0.0000	-12.75	0.0355
6	71.07	-0.0215	-12.75	-0.0142
7	70.93	0.0628	-13.83	0.7647
8	72.37	-5.1988	-7.75	-5.5570
9	55.32	24.1198	-4.82	-10.3697

Max LL Rotations & Corresponding Vertical Reactions

	----Pos Rotations----		----Neg Rotetions----	
Support	(+)Rot	React	(-)Rot	React
1	10.3903	-4.81	-38.7769	34.90
2	24.3899	52.09	-20.7806	45.81
3	20.0233	47.74	-20.0229	28.20
4	19.8450	47.45	-19.7896	47.40
5	19.8052	47.35	-19.8052	47.35
6	19.7896	47.40	-19.8450	47.45
7	20.0229	28.20	-20.0233	47.74
8	20.7806	45.81	-24.3899	52.09
9	38.7769	34.90	-10.3903	-4.81

Max LL Shears & Corresponding Moments

		----Pos Shears----		----Neg Shears----		
Span	X	(+)V	M	(-)V	M	
1	0.00	55.3	0.0	-4.8	0.0	*supp 1*
1	1.14	46.6	53.1	-9.2	38.4	*pt 0.1*
1	2.28	38.4	87.3	-14.6	65.3	*pt 0.2*
1	3.41	30.6	104.3	-19.7	81.8	*pt 0.3*
1	4.55	23.7	107.7	-24.4	89.1	*pt 0.4*
1	5.69	18.6	106.0	-28.9	88.2	*pt 0.5*
1	6.83	14.0	95.8	-35.7	92.2	*pt 0.6*
1	7.96	9.9	78.8	-43.3	72.1	*pt 0.7*
1	9.10	6.3	57.4	-50.4	40.0	*pt 0.8*
1	10.24	3.3	34.1	-56.9	-1.2	*pt 0.9*
1	11.38	1.3	14.7	-62.7	-48.0	*supp 2*
2	0.00	59.7	-39.6	-6.5	14.7	*supp 2*
2	1.14	52.6	6.4	-8.3	31.8	*pt 0.1*
2	2.28	45.0	43.1	-12.4	50.4	*pt 0.2*
2	3.41	37.1	68.2	-16.6	64.6	*pt 0.3*

VQ-093
Rutland, VT
Steel Truss: Ripley Road over Otter Creek

2	4.55	30.3	70.3	-21.0	73.7	*pt 0.4*
2	5.69	26.2	73.3	-25.4	76.7	*pt 0.5*
2	6.83	21.9	70.8	-29.9	79.7	*pt 0.6*
2	7.96	17.6	63.0	-37.7	66.4	*pt 0.7*
2	9.10	13.4	50.6	-45.6	40.6	*pt 0.8*
2	10.24	9.6	35.2	-53.1	3.6	*pt 0.9*
2	11.38	8.3	20.7	-60.0	-41.6	*supp 3*
3	0.00	59.9	-41.0	-6.7	17.2	*supp 3*
3	1.14	52.9	4.3	-8.6	34.3	*pt 0.1*
3	2.28	45.3	41.0	-12.4	50.8	*pt 0.2*
3	3.41	37.4	66.5	-16.5	64.3	*pt 0.3*
3	4.55	29.7	80.9	-20.9	73.3	*pt 0.4*
3	5.69	25.3	78.2	-25.3	76.4	*pt 0.5*
3	6.83	20.9	73.0	-30.1	81.4	*pt 0.6*
3	7.96	16.5	64.1	-37.5	68.2	*pt 0.7*
3	9.10	12.4	50.5	-45.4	40.6	*pt 0.8*
3	10.24	8.6	33.9	-53.0	3.8	*pt 0.9*
3	11.38	6.8	17.2	-60.0	-41.5	*supp 4*
4	0.00	59.9	-41.5	-6.7	17.0	*supp 4*
4	1.14	52.9	3.8	-8.6	33.8	*pt 0.1*
4	2.28	45.3	40.6	-12.4	50.5	*pt 0.2*
4	3.41	37.4	66.1	-16.5	64.1	*pt 0.3*
4	4.55	29.8	80.7	-20.8	73.1	*pt 0.4*
4	5.69	25.3	76.3	-25.2	76.3	*pt 0.5*
4	6.83	20.8	73.1	-29.8	80.7	*pt 0.6*
4	7.96	16.5	64.1	-37.4	66.2	*pt 0.7*
4	9.10	12.4	50.5	-45.3	40.6	*pt 0.8*
4	10.24	8.6	33.9	-52.9	3.9	*pt 0.9*
4	11.38	6.7	17.1	-59.9	-41.4	*supp 5*
5	0.00	59.9	-41.4	-6.7	17.1	*supp 5*
5	1.14	52.9	3.9	-8.6	33.9	*pt 0.1*
5	2.28	45.3	40.6	-12.4	50.5	*pt 0.2*
5	3.41	37.4	66.2	-16.5	64.1	*pt 0.3*
5	4.55	29.8	80.7	-20.8	73.1	*pt 0.4*
5	5.69	25.2	78.3	-25.3	76.3	*pt 0.5*
5	6.83	20.8	73.1	-29.8	80.7	*pt 0.6*
5	7.96	16.5	64.1	-37.4	66.1	*pt 0.7*
5	9.10	12.4	50.5	-45.3	40.6	*pt 0.8*
5	10.24	8.6	33.8	-52.9	3.8	*pt 0.9*
5	11.38	6.7	17.0	-59.9	-41.5	*supp 6*
6	0.00	60.0	-41.5	-6.8	17.2	*supp 8*
6	1.14	53.0	3.8	-8.8	33.9	*pt 0.1*
6	2.28	45.4	40.8	-12.4	50.5	*pt 0.2*
6	3.41	37.5	66.2	-16.5	64.1	*pt 0.3*
6	4.55	30.1	81.4	-20.9	73.0	*pt 0.4*
6	5.69	25.3	76.4	-25.3	76.2	*pt 0.5*
6	6.83	20.9	73.3	-29.7	80.9	*pt 0.6*
6	7.96	16.5	64.3	-37.4	66.5	*pt 0.7*
6	9.10	12.4	50.8	-45.3	41.0	*pt 0.8*
6	10.24	8.6	34.3	-52.9	4.3	*pt 0.9*
6	11.38	8.7	17.2	-59.9	-41.0	*supp 7*
7	0.00	60.0	-41.6	-8.3	20.7	*supp 7*
7	1.14	53.1	3.6	-9.6	35.2	*pt 0.1*
7	2.28	45.6	40.6	-13.4	50.6	*pt 0.2*
7	3.41	37.7	66.4	-17.6	63.0	*pt 0.3*
7	4.55	29.9	79.7	-21.9	70.8	*pt 0.4*
7	5.69	25.4	78.7	-26.2	73.3	*pt 0.5*
7	8.83	21.0	73.7	-30.3	70.3	*pt 0.6*
7	7.96	16.6	64.6	-37.1	68.2	*pt 0.7*
7	9.10	12.4	50.4	-45.0	43.1	*pt 0.8*
7	10.24	8.3	31.8	-52.6	6.4	*pt 0.9*
7	11.38	8.5	14.7	-59.7	-39.6	*supp 8*
8	0.00	62.7	-48.0	-1.3	14.7	*supp 8*
8	1.14	56.9	-1.2	-3.3	34.1	*pt 0.1*
8	2.28	50.4	40.0	-6.3	57.4	*pt 0.2*
8	3.41	43.3	72.1	-9.9	78.8	*pt 0.3*
8	4.55	35.7	92.2	-14.0	95.8	*pt 0.4*
8	5.69	28.9	88.2	-18.6	106.0	*pt 0.5*
8	6.83	24.4	89.1	-23.7	107.7	*pt 0.6*
8	7.96	19.7	81.8	-30.6	104.3	*pt 0.7*
8	9.10	14.6	65.3	-38.4	87.3	*pt 0.8*

4 of 8

8	10.24	9.2	38.4	-48.6	53.1	*pt 0.9*
8	11.38	4.8	0.0	-55.3	0.0	*supp 9*

Max LL Moments & Corresponding Shears

		----Pos Moments----		----Neg Moments----		
Span	X	(+)M	V	(-)M	V	
1	0.00	0.0	0.0	0.0	0.0	*supp 1*
1	1.14	53.4	48.6	-5.5	-4.8	*pt 0.1*
1	2.28	88.5	38.2	-11.0	-4.8	*pt 0.2*
1	3.41	106.6	30.2	-16.4	-4.8	*pt 0.3*
1	4.55	111.0	22.9	-21.9	-4.8	*pt 0.4*
1	5.69	110.0	-25.0	-27.4	-4.8	*pt 0.5*
1	6.83	99.8	-30.1	-32.9	-4.8	*pt 0.6*
1	7.96	82.0	-34.8	-38.3	-4.8	*pt 0.7*
1	9.10	58.9	-38.7	-43.9	-5.1	*pt 0.8*
1	10.24	34.3	-40.1	-53.9	-20.8	*pt 0.9*
1	11.38	14.7	1.3	-81.7	-27.4	*supp 2*
2	0.00	14.7	-6.4	-81.7	24.2	*supp 2*
2	1.14	32.2	35.3	-64.8	10.1	*pt 0.1*
2	2.28	52.1	35.8	-54.5	8.2	*pt 0.2*
2	3.41	74.3	33.5	-45.8	7.6	*pt 0.3*
2	4.55	88.7	28.0	-38.7	1.2	*pt 0.4*
2	5.69	94.4	22.3	-37.4	1.2	*pt 0.5*
2	6.83	90.8	-26.0	-36.1	1.2	*pt 0.6*
2	7.96	78.7	-31.4	-37.3	-5.8	*pt 0.7*
2	9.10	59.5	-34.4	-44.0	-6.6	*pt 0.8*
2	10.24	38.3	-37.1	-52.6	-8.5	*pt 0.9*
2	11.38	26.2	7.3	-72.7	-23.7	*supp 3*
3	0.00	26.2	-6.6	-72.7	23.2	*supp 3*
3	1.14	40.3	37.1	-53.4	8.7	*pt 0.1*
3	2.28	61.5	34.3	-44.6	6.9	*pt 0.2*
3	3.41	80.3	31.0	-37.5	6.1	*pt 0.3*
3	4.55	91.8	25.5	-33.8	0.0	*pt 0.4*
3	5.69	94.6	-22.8	-33.7	0.0	*pt 0.5*
3	6.83	90.5	-25.8	-33.7	0.0	*pt 0.6*
3	7.98	78.6	-31.4	-37.1	-6.1	*pt 0.7*
3	9.10	59.4	-34.6	-44.1	-6.9	*pt 0.8*
3	10.24	38.0	-37.4	-52.9	-8.7	*pt 0.9*
3	11.38	24.2	6.4	-72.5	-23.2	*supp 4*
4	0.00	24.2	-6.4	-72.5	23.5	*supp 4*
4	1.14	38.1	37.3	-53.0	8.7	*pt 0.1*
4	2.28	59.5	34.6	-44.2	6.9	*pt 0.2*
4	3.41	78.8	31.3	-37.2	6.1	*pt 0.3*
4	4.55	90.5	25.8	-33.6	0.0	*pt 0.4*
4	5.69	93.6	-22.5	-33.6	0.0	*pt 0.5*
4	6.83	90.4	-25.8	-33.6	0.0	*pt 0.8*
4	7.96	78.6	-31.3	-37.1	-6.0	*pt 0.7*
4	9.10	59.5	-34.6	-44.1	-6.8	*pt 0.8*
4	10.24	38.0	-37.3	-52.8	-8.7	*pt 0.9*
4	11.38	24.2	6.4	-72.4	-23.1	*supp 5*
5	0.00	24.2	-6.4	-72.4	23.5	*supp 5*
5	1.14	38.0	37.3	-52.8	8.7	*pt 0.1*
5	2.28	59.5	34.6	-44.1	6.8	*pt 0.2*
5	3.41	78.6	31.3	-37.1	8.0	*pt 0.3*
5	4.55	90.4	25.8	-33.6	0.0	*pt 0.4*
5	5.69	93.6	22.5	-33.6	0.0	*pt 0.5*
5	6.83	90.5	-25.8	-33.6	0.0	*pt 0.6*
5	7.96	78.6	-31.3	-37.2	-6.1	*pt 0.7*
5	9.10	59.5	-34.6	-44.2	-6.9	*pt 0.8*
5	10.24	38.1	-37.3	-53.0	-8.7	*pt 0.9*
5	11.38	24.2	6.4	-72.5	-23.5	*supp 6*
6	0.00	24.2	-6.4	-72.5	23.2	*supp 6*
6	1.14	38.0	37.4	-52.9	8.7	*pt 0.1*
6	2.28	59.4	34.6	-44.1	6.9	*pt 0.2*
6	3.41	78.6	31.4	-37.1	6.1	*pt 0.3*
6	4.55	90.5	25.8	-33.7	0.0	*pt 0.4*
6	5.69	94.6	22.8	-33.7	0.0	*pt 0.5*
6	6.83	91.8	-25.5	-33.8	0.0	*pt 0.6*
6	7.96	80.3	-31.0	-37.5	-6.1	*pt 0.7*
6	9.10	61.5	-34.3	-44.8	-6.9	*pt 0.8*
6	10.24	40.3	-37.1	-53.4	-8.7	*pt 0.9*

VQ-093
Rutland, VT
Steel Truss: Ripley Road over Otter Creek

5 of 8

6	11.38	26.2	6.6	-72.7	-23.2	*supp 7*
7	0.00	26.2	-7.3	-72.7	23.7	*supp 7*
7	1.14	38.3	37.1	-52.6	8.5	*pt 0.1*
7	2.28	59.5	34.4	-44.0	6.6	*pt 0.2*
7	3.41	78.7	31.4	-37.3	5.8	*pt 0.3*
7	4.55	90.8	26.0	-38.1	-1.2	*pt 0.4*
7	5.69	94.4	-22.3	-37.4	-1.2	*pt 0.5*
7	6.83	88.7	-28.0	-38.7	-1.2	*pt 0.6*
7	7.96	74.3	-33.5	-45.8	-7.6	*pt 0.7*
7	9.10	52.1	-37.6	-54.5	-7.6	*pt 0.8*
7	10.24	32.2	-35.3	-64.8	-10.1	*pt 0.9*
7	11.38	14.7	6.4	-81.7	-24.2	*supp 8*
8	0.00	14.7	-1.3	-81.7	27.4	*supp 8*
8	1.14	34.3	40.1	-53.9	20.8	*pt 0.1*
8	2.28	58.9	38.7	-43.8	5.1	*pt 0.2*
8	3.41	82.0	34.8	-38.3	4.8	*pt 0.3*
8	4.55	99.8	30.1	-32.9	4.8	*pt 0.4*
8	5.69	110.0	25.0	-27.4	4.8	*pt 0.5*
8	6.83	111.0	-22.9	-21.9	4.8	*pt 0.6*
8	7.96	106.6	-30.2	-16.4	4.8	*pt 0.7*
8	9.10	88.5	-38.2	-11.0	4.8	*pt 0.8*
8	10.24	53.4	-46.6	-5.5	4.8	*pt 0.9*
8	11.38	0.0	0.0	0.0	0.0	*supp 9*

Max LL Reactions - Critical Case Desription

Support	(+)Reactions	(-)Reactions
1	*UDL spans: 1, 3, 5, 7; -->Tdm lead @ 4.0*	*UDL spans: 2, 4, 6, 8; -->Tdm lead @ 18.4*
2	*UDL spans: 1, 2, 4, 8, 8; -->Tdm lead @ 12.7*	*UDL spans: 3, 5, 7; -->Tdm lead @ 29.8*
3	*UDL spans: 2, 3, 5, 7; -->Tdm lead @ 24.8*	*UDL spans: 1, 4, 6, 8; <--Trk rear [var s = 30] @ 37.8*
4	*UDL spans: 1, 3, 4, 6, 8; -->Tdm lead @ 36.1*	*UDL spans: 2, 5, 7; <--Trk rear [var s = 30] @ 49.2*
5	*UDL spans: 2, 4, 5, 7; -->Tdm lead @ 47.5*	*UDL spans: 1, 3, 6, 8; <--Trk rear [var s = 30] @ 60.6*
8	*UDL spans: 1, 3, 5, 8, 8; -->Tdm lead @ 58.9*	*UDL spans: 2, 4, 7; -->Trk lead [var s = 30] @ 85.8*
7	*UDL spans: 2, 4, 6, 7; -->Tdm lead @ 70.3*	*UDL spans: 1, 3, 5, 8; -->Trk lead [var s = 30] @ 97.4*
8	*UDL spans: 1, 3, 5, 7, 8; -->Tdm lead @ 82.4*	*UDL spans: 2, 4, 6; -->Tdm lead @ 65.2*
9	*UDL spans: 2, 4, 6, 8; -->Tdm lead @ 91.0*	*UDL spans: 1, 3, 5, 7; -->Tdm lead @ 78.8*

Max LL Rotations - Critical Case Desription

Support	(+)Rotations	(-)Rotetions
1	*UDL spans: 2, 4, 6, 8; -->Tdm lead @ 18.4*	*UDL spans: 1, 3, 5, 7; -->Tdm lead @ 7.0*
2	*UDL spans: 1, 3, 5, 7; -->Tdm lead @ 7.9*	*UDL spans: 2, 4, 6, 8; -->Tdm lead @ 18.4*
3	*UDL spans: 2, 4, 6, 8; -->Tdm lead @ 19.7*	*UDL spans: 1, 3, 5, 7; <--Trk rear [var s = 20.4927536231884] @ 27.1*
4	*UDL spans: 1, 3, 5, 7; -->Tdm lead @ 31.1*	*UDL spans: 2, 4, 6, 8; -->Tdm lead @ 41.1*
5	*UDL spans: 2, 4, 6, 8; -->Tdm lead @ 42.5*	*UDL spans: 1, 3, 5, 7; -->Tdm lead @ 52.5*
6	*UDL spans: 1, 3, 5, 7; -->Tdm lead @ 53.9*	*UDL spans: 2, 4, 8, 8; -->Tdm lead @ 63.9*
7	*UDL spans: 2, 4, 6, 8; -->Trk lead [var s = 20.4927536231884] @ 9*	*UDL spans: 1, 3, 5, 7; -->Tdm lead @ 75.3*
8	*UDL spans: 1, 3, 5, 7; -->Tdm lead @ 78.6*	*UDL spans: 2, 4, 6, 8; -->Tdm lead @ 87.1*
9	*UDL spans: 2, 4, 6, 8; -->Tdm lead @ 88.0*	*UDL spans: 1, 3, 5, 7; -->Tdm lead @ 78.6*

Max LL Shears - Critical Case Desription

Span	X	(+)Shears	(-)Shears
1	0.00	*UDL spans: 1, 3, 5, 7; -->Tdm lead @ 4.0*	*UDL spans: 2, 4, 8, 8; -->Tdm lead @ 18.4*
1	1.14	*UDL spans: 1 (Rt L = 10.2), 3, 5, 7; -->Tdm lead @ 5.1*	*UDL spans: 1 (Lt L = 1.1), 2, 4, 6, 8; -->Trk lead [var s = 14.463768115942] @ 29.6*
1	2.28	*UDL spans: 1 (Rt L = 9.1), 3, 5, 7; -->Tdm lead @ 6.3*	*UDL spans: 1 (Lt L = 2.3), 2, 4, 6, 8; -->Trk lead [var s = 14] @ 30.3*
1	3.41	*UDL spans: 1 (Rt L = 8.0), 3, 5, 7; -->Tdm lead @ 7.4*	*UDL spans: 1 (Lt L = 3.4), 2, 4, 6, 8; -->Trk lead [var s = 14] @ 31.4*
1	4.55	*UDL spans: 1 (Rt L = 6.8), 3, 5, 7; -->Trk lead [var s = 22.57971014*	*UDL spans: 1 (Lt L = 4.6), 2, 4, 6, 8; -->Trk lead [var s = 14] @ 32.5*
1	5.69	*UDL spans: 1 (Rt L = 5.7), 3, 5, 7; -->Trk lead [var s = 21.42028985*	*UDL spans: 1 (Lt L = 5.7), 2, 4, 6, 8; -->Trk lead [var s = 14] @ 33.7*
1	6.83	*UDL spans: 1 (Rt L = 4.6), 3, 5, 7; -->Trk lead [var s = 20.26086956*	*UDL spans: 1 (Lt L = 8.8), 2, 4, 6, 8; -->Tdm lead @ 6.8*
1	7.96	*UDL spans: 1 (Rt L = 3.4), 3, 5, 7; -->Trk lead [var s = 19.10144927*	*UDL spans: 1 (Lt L = 8.0), 2, 4, 6, 8; -->Tdm lead @ 8.0*
1	9.10	*UDL spans: 1 (Rt L = 2.3), 3, 5, 7; -->Trk lead [var s = 17.94202898*	*UDL spans: 1 (Lt L = 9.1), 2, 4, 8, 8; -->Tdm lead @ 9.1*
1	10.24	*UDL spans: 1 (Rt L = 1.1), 3, 5, 7; -->Trk lead [var s = 16.78260869*	*UDL spans: 1 (Lt L = 10.2), 2, 4, 6, 8; -->Tdm lead @ 10.2*
1	11.38	*UDL spans: 3, 5, 7; -->Tdm lead @ 29.8*	*UDL spans: 1, 2, 4, 6, 8; -->Tdm lead @ 11.4*
2	0.00	*UDL spans: 1, 2, 4, 6, 8; -->Tdm lead @ 15.4*	*UDL spans: 3, 5, 7; -->Tdm lead @ 29.8*
2	1.14	*UDL spans: 1, 2 (Rt L = 10.2), 4, 8, 8; -->Tdm lead @ 18.5*	*UDL spans: 2 (Lt L = 1.1), 3, 5, 7; -->Trk lead [var s = 14.463768115942] @ 41.0*
2	2.28	*UDL spans: 1, 2 (Rt L = 9.1), 4, 6, 8; -->Tdm lead @ 17.7*	*UDL spans: 2 (Lt L = 2.3), 3, 5, 7; -->Trk lead [var s = 14] @ 41.6*
2	3.41	*UDL spans: 1, 2 (Rt L = 8.0), 4, 8, 8; -->Tdm lead @ 18.8*	*UDL spans: 2 (Lt L = 3.4), 3, 5, 7; -->Trk lead [var s = 14] @ 42.8*
2	4.55	*UDL spans: 1, 2 (Rt L = 6.8), 4, 8, 8; -->Trk lead [var s = 14] @ 29.9*	*UDL spans: 2 (Lt L = 4.6), 3, 5, 7; -->Trk lead [var s = 14] @ 43.9*
2	5.69	*UDL spans: 1, 2 (Rt L = 5.7), 4, 8, 8; -->Trk lead [var s = 14] @ 31.1*	*UDL spans: 2 (Lt L = 5.7), 3, 5, 7; -->Trk lead [var s = 14] @ 45.1*
2	6.83	*UDL spans: 1, 2 (Rt L = 4.6), 4, 6, 8; -->Trk lead [var s = 14] @ 32.2*	*UDL spans: 2 (Lt L = 6.8), 3, 5, 7; -->Tdm lead @ 18.2*
2	7.96	*UDL spans: 1, 2 (Rt L = 3.4), 4, 6, 8; -->Trk lead [var s = 14] @ 33.3*	*UDL spans: 2 (Lt L = 8.0), 3, 5, 7; -->Tdm lead @ 19.3*
2	9.10	*UDL spans: 1, 2 (Rt L = 2.3), 4, 6, 8; -->Trk lead [var s = 14] @ 34.5*	*UDL spans: 2 (Lt L = 9.1), 3, 5, 7; -->Tdm lead @ 20.5*
2	10.24	*UDL spans: 1, 2 (Rt L = 1.1), 4, 8, 8; -->Trk lead [var s = 15.159420*	*UDL spans: 2 (Lt L = 10.2), 3, 5, 7; -->Tdm lead @ 21.6*

2	11.38	UDL spans: 1, 4, 6, 8; -->Tdm lead @ 7.9	UDL spans: 2, 3, 5, 7; -->Tdm lead @ 22.7
3	0.00	UDL spans: 2, 3, 5, 7; -->Tdm lead @ 26.8	UDL spans: 1, 4, 6, 8; -->Tdm lead @ 41.1
3	1.14	UDL spans: 2, 3 (Rt L = 10.2), 5, 7; -->Tdm lead @ 27.9	UDL spans: 1, 3 (Lt L = 1.1), 4, 6, 8; <--Trk rear [var s = 14.463768115942] @ 38.4
3	2.28	UDL spans: 2, 3 (Rt L = 9.1), 5, 7; -->Tdm lead @ 29.0	UDL spans: 1, 3 (Lt L = 2.3), 4, 6, 8; <--Trk rear [var s = 14] @ 39.0
3	3.41	UDL spans: 2, 3 (Rt L = 8.0), 5, 7; -->Tdm lead @ 30.2	UDL spans: 1, 3 (Lt L = 3.4), 4, 6, 8; -->Trk lead [var s = 14] @ 54.2
3	4.55	UDL spans: 2, 3 (Rt L = 6.8), 5, 7; <--Trk rear [var s = 22.579710144	UDL spans: 1, 3 (Lt L = 4.6), 4, 6, 8; -->Trk lead [var s = 14] @ 55.3
3	5.69	UDL spans: 2, 3 (Rt L = 5.7), 5, 7; -->Trk lead [var s = 14] @ 42.4	UDL spans: 1, 3 (Lt L = 5.7), 4, 6, 8; -->Trk lead [var s = 14] @ 58.4
3	6.83	UDL spans: 2, 3 (Rt L = 4.6), 5, 7; -->Trk lead [var s = 14] @ 43.8	UDL spans: 1, 3 (Lt L = 6.8), 4, 6, 8; -->Trk lead [var s = 23.0434782808696] @ 43.6
3	7.96	UDL spans: 2, 3 (Rt L = 3.4), 5, 7; -->Trk lead [var s = 14] @ 44.7	UDL spans: 1, 3 (Lt L = 8.0), 4, 6, 8; -->Tdm lead @ 30.7
3	9.10	UDL spans: 2, 3 (Rt L = 2.3), 5, 7; -->Trk lead [var s = 14] @ 45.9	UDL spans: 1, 3 (Lt L = 9.1), 4, 6, 8; -->Tdm lead @ 31.8
3	10.24	UDL spans: 2, 3 (Rt L = 1.1), 5, 7; -->Trk lead [var s = 14.69585217	UDL spans: 1, 3 (Lt L = 10.2), 4, 6, 8; -->Tdm lead @ 33.0
3	11.38	UDL spans: 2, 5, 7; -->Tdm lead @ 19.7	UDL spans: 1, 3, 4, 6, 8; -->Tdm lead @ 34.1
4	0.00	UDL spans: 1, 3, 4, 6, 8; -->Tdm lead @ 38.1	UDL spans: 2, 5, 7; -->Tdm lead @ 52.5
4	1.14	UDL spans: 1, 3, 4 (Rt L = 10.2), 6, 8; -->Tdm lead @ 39.3	UDL spans: 2, 4 (Lt L = 1.1), 5, 7; <--Trk rear [var s = 14.463768115942] @ 49.7
4	2.28	UDL spans: 1, 3, 4 (Rt L = 9.1), 6, 8; -->Tdm lead @ 40.4	UDL spans: 2, 4 (Lt L = 2.3), 5, 7; <--Trk rear [var s = 14] @ 50.4
4	3.41	UDL spans: 1, 3, 4 (Rt L = 8.0), 6, 8; -->Tdm lead @ 41.5	UDL spans: 2, 4 (Lt L = 3.4), 5, 7; -->Trk lead [var s = 14] @ 65.5
4	4.55	UDL spans: 1, 3, 4 (Rt L = 6.8), 6, 8; <--Trk rear [var s = 22.5797101	UDL spans: 2, 4 (Lt L = 4.6), 5, 7; -->Trk lead [var s = 14] @ 66.7
4	5.69	UDL spans: 1, 3, 4 (Rt L = 5.7), 6, 8; -->Trk lead [var s = 14] @ 53.8	UDL spans: 2, 4 (Lt L = 5.7), 5, 7; -->Trk lead [var s = 14] @ 67.8
4	6.83	UDL spans: 1, 3, 4 (Rt L = 4.8), 6, 8; -->Trk lead [var s = 14] @ 55.0	UDL spans: 2, 4 (Lt L = 6.8), 5, 7; -->Trk lead [var s = 22.5797101449275] @ 54.9
4	7.96	UDL spans: 1, 3, 4 (Rt L = 3.4), 8, 8; -->Trk lead [var s = 14] @ 56.1	UDL spans: 2, 4 (Lt L = 8.0), 5, 7; -->Tdm lead @ 42.1
4	9.10	UDL spans: 1, 3, 4 (Rt L = 2.3), 6, 8; -->Trk lead [var s = 14] @ 57.2	UDL spans: 2, 4 (Lt L = 9.1), 5, 7; -->Tdm lead @ 43.2
4	10.24	UDL spans: 1, 3, 4 (Rt L = 1.1), 6, 8; -->Trk lead [var s = 14.463768	UDL spans: 2, 4 (Lt L = 10.2), 5, 7; -->Tdm lead @ 44.4
4	11.38	UDL spans: 1, 3, 6, 8; -->Tdm lead @ 31.1	UDL spans: 2, 4, 5, 7; -->Tdm lead @ 45.5
5	0.00	UDL spans: 2, 4, 5, 7; -->Tdm lead @ 49.5	UDL spans: 1, 3, 6, 8; -->Tdm lead @ 63.9
5	1.14	UDL spans: 2, 4, 5 (Rt L = 10.2), 7; -->Tdm lead @ 50.6	UDL spans: 1, 3, 5 (Lt L = 1.1), 6, 8; <--Trk rear [var s = 14.463768115942] @ 61.1
5	2.28	UDL spans: 2, 4, 5 (Rt L = 9.1), 7; -->Tdm lead @ 51.8	UDL spans: 1, 3, 5 (Lt L = 2.3), 8, 8; <--Trk rear [var s = 14] @ 81.8
5	3.41	UDL spans: 2, 4, 5 (Rt L = 8.0), 7; -->Tdm lead @ 52.9	UDL spans: 1, 3, 5 (Lt L = 3.4), 6, 8; -->Trk lead [var s = 14] @ 78.9
5	4.55	UDL spans: 2, 4, 5 (Rt L = 6.8), 7; <--Trk rear [var s = 22.579710144	UDL spans: 1, 3, 5 (Lt L = 4.6), 6, 8; -->Trk lead [var s = 14] @ 78.0
5	5.69	UDL spans: 2, 4, 5 (Rt L = 5.7), 7; -->Trk lead [var s = 14] @ 65.2	UDL spans: 1, 3, 5 (Lt L = 5.7), 6, 8; -->Trk lead [var s = 14] @ 79.2
5	6.83	UDL spans: 2, 4, 5 (Rt L = 4.6), 7; -->Trk lead [var s = 14] @ 66.3	UDL spans: 1, 3, 5 (Lt L = 6.8), 8, 8; -->Trk lead [var s = 22.5797101449275] @ 68.3
5	7.96	UDL spans: 2, 4, 5 (Rt L = 3.4), 7; -->Trk lead [var s = 14] @ 67.5	UDL spans: 1, 3, 5 (Lt L = 8.0), 6, 8; -->Tdm lead @ 53.5
5	9.10	UDL spans: 2, 4, 5 (Rt L = 2.3), 7; -->Trk lead [var s = 14] @ 68.6	UDL spans: 1, 3, 5 (Lt L = 9.1), 6, 8; -->Tdm lead @ 54.6
5	10.24	UDL spans: 2, 4, 5 (Rt L = 1.1), 7; -->Trk lead [var s = 14.46376811	UDL spans: 1, 3, 5 (Lt L = 10.2), 6, 8; -->Tdm lead @ 55.7
5	11.38	UDL spans: 2, 4, 7; -->Tdm lead @ 42.5	UDL spans: 1, 3, 5, 6, 8; -->Tdm lead @ 56.9
6	0.00	UDL spans: 1, 3, 5, 6, 8; -->Tdm lead @ 60.9	UDL spans: 2, 4, 7; -->Tdm lead @ 75.3
6	1.14	UDL spans: 1, 3, 5, 6 (Rt L = 10.2), 8; -->Tdm lead @ 62.0	UDL spans: 2, 4, 8 (Lt L = 1.1), 7; <--Trk rear [var s = 14.695652173913] @ 72.7
8	2.28	UDL spans: 1, 3, 5, 6 (Rt L = 9.1), 8; -->Tdm lead @ 63.2	UDL spans: 2, 4, 8 (Lt L = 2.3), 7; <--Trk rear [var s = 14] @ 73.1
6	3.41	UDL spans: 1, 3, 5, 8 (Rt L = 8.0), 8; -->Tdm lead @ 64.3	UDL spans: 2, 4, 6 (Lt L = 3.4), 7; -->Trk lead [var s = 14] @ 88.3
6	4.55	UDL spans: 1, 3, 5, 8 (Rt L = 6.8), 8; <--Trk rear [var s = 23.0434782	UDL spans: 2, 4, 6 (Lt L = 4.6), 7; -->Trk lead [var s = 14] @ 89.4
6	5.69	UDL spans: 1, 3, 5, 8 (Rt L = 5.7), 8; -->Trk lead [var s = 14] @ 76.6	UDL spans: 2, 4, 6 (Lt L = 5.7), 7; -->Trk lead [var s = 14] @ 90.8
8	6.83	UDL spans: 1, 3, 5, 6 (Rt L = 4.8), 8; -->Trk lead [var s = 14] @ 77.7	UDL spans: 2, 4, 6 (Lt L = 8.8), 7; -->Trk lead [var s = 22.5797101449275] @ 77.7
6	7.96	UDL spans: 1, 3, 5, 6 (Rt L = 3.4), 8; -->Trk lead [var s = 14] @ 78.8	UDL spans: 2, 4, 6 (Lt L = 8.0), 7; -->Tdm lead @ 64.8
6	9.10	UDL spans: 1, 3, 5, 6 (Rt L = 2.3), 8; -->Trk lead [var s = 14] @ 80.0	UDL spans: 2, 4, 6 (Lt L = 9.1), 7; -->Tdm lead @ 68.0
6	10.24	UDL spans: 1, 3, 5, 6 (Rt L = 1.1), 8; -->Trk lead [var s = 14.463768	UDL spans: 2, 4, 6 (Lt L = 10.2), 7; -->Tdm lead @ 67.1
6	11.38	UDL spans: 1, 3, 5, 8; -->Tdm lead @ 53.9	UDL spans: 2, 4, 6, 7; -->Tdm lead @ 68.2
7	0.00	UDL spans: 2, 4, 6, 7; -->Tdm lead @ 72.3	UDL spans: 1, 3, 5, 8; -->Tdm lead @ 87.1
7	1.14	UDL spans: 2, 4, 6, 7 (Rt L = 10.2); -->Tdm lead @ 73.4	UDL spans: 1, 3, 5, 7 (Lt L = 1.1), 8; <--Trk rear [var s = 15.1594202898551] @ 84.5
7	2.28	UDL spans: 2, 4, 6, 7 (Rt L = 9.1); -->Tdm lead @ 74.5	UDL spans: 1, 3, 5, 7 (Lt L = 2.3), 8; <--Trk rear [var s = 14] @ 84.5
7	3.41	UDL spans: 2, 4, 6, 7 (Rt L = 8.0); -->Tdm lead @ 75.7	UDL spans: 1, 3, 5, 7 (Lt L = 3.4), 8; -->Trk lead [var s = 14] @ 99.7
7	4.55	UDL spans: 2, 4, 6, 7 (Rt L = 6.8); -->Tdm lead @ 76.8	UDL spans: 1, 3, 5, 7 (Lt L = 4.8), 8; -->Trk lead [var s = 14] @ 100.8
7	5.69	UDL spans: 2, 4, 6, 7 (Rt L = 5.7); -->Trk lead [var s = 14] @ 87.9	UDL spans: 1, 3, 5, 7 (Lt L = 5.7), 8; -->Trk lead [var s = 14] @ 101.9
7	6.83	UDL spans: 2, 4, 8, 7 (Rt L = 4.8); -->Trk lead [var s = 14] @ 89.1	UDL spans: 1, 3, 5, 7 (Lt L = 8.8), 8; -->Trk lead [var s = 14] @ 103.1
7	7.96	UDL spans: 2, 4, 6, 7 (Rt L = 3.4); -->Trk lead [var s = 14] @ 90.2	UDL spans: 1, 3, 5, 7 (Lt L = 8.0), 8; -->Tdm lead @ 76.2
7	9.10	UDL spans: 2, 4, 6, 7 (Rt L = 2.3); -->Trk lead [var s = 14] @ 91.4	UDL spans: 1, 3, 5, 7 (Lt L = 9.1), 8; -->Tdm lead @ 77.3
7	10.24	UDL spans: 2, 4, 6, 7 (Rt L = 1.1); -->Trk lead [var s = 14.46376811	UDL spans: 1, 3, 5, 7 (Lt L = 10.2), 8; -->Tdm lead @ 78.5
7	11.38	UDL spans: 2, 4, 8; -->Tdm lead @ 65.2	UDL spans: 1, 3, 5, 7, 8; -->Tdm lead @ 79.8
8	0.00	UDL spans: 1, 3, 5, 7, 8; -->Tdm lead @ 83.8	UDL spans: 2, 4, 8; -->Tdm lead @ 65.2
8	1.14	UDL spans: 1, 3, 5, 7, 8 (Rt L = 10.2); -->Tdm lead @ 84.8	UDL spans: 2, 4, 6, 8 (Lt L = 1.1); -->Trk lead [var s = 18.7826086956522] @ 94.8
8	2.28	UDL spans: 1, 3, 5, 7, 8 (Rt L = 9.1); -->Tdm lead @ 85.9	UDL spans: 2, 4, 6, 8 (Lt L = 2.3); -->Trk lead [var s = 17.9420289855072] @ 95.9
8	3.41	UDL spans: 1, 3, 5, 7, 8 (Rt L = 8.0); -->Tdm lead @ 87.0	UDL spans: 2, 4, 6, 8 (Lt L = 3.4); -->Trk lead [var s = 19.1014492753623] @ 97.0
8	4.55	UDL spans: 1, 3, 5, 7, 8 (Rt L = 8.8); -->Tdm lead @ 88.2	UDL spans: 2, 4, 6, 8 (Lt L = 4.6); -->Trk lead [var s = 20.2608695652174] @ 98.2
8	5.69	UDL spans: 1, 3, 5, 7, 8 (Rt L = 5.7); -->Trk lead [var s = 14] @ 99.3	UDL spans: 2, 4, 6, 8 (Lt L = 5.7); -->Trk lead [var s = 21.4202898550725] @ 99.3
8	6.83	UDL spans: 1, 3, 5, 7, 8 (Rt L = 4.6); -->Trk lead [var s = 14] @ 100.	UDL spans: 2, 4, 6, 8 (Lt L = 6.8); -->Trk lead [var s = 22.5797101449275] @ 100.4
8	7.96	UDL spans: 1, 3, 5, 7, 8 (Rt L = 3.4); -->Trk lead [var s = 14] @ 101.	UDL spans: 2, 4, 6, 8 (Lt L = 8.0); -->Tdm lead @ 87.6
8	9.10	UDL spans: 1, 3, 5, 7, 8 (Rt L = 2.3); -->Trk lead [var s = 14] @ 102.	UDL spans: 2, 4, 6, 8 (Lt L = 9.1); -->Tdm lead @ 88.7
8	10.24	UDL spans: 1, 3, 5, 7, 8 (Rt L = 1.1); -->Trk lead [var s = 14.463768	UDL spans: 2, 4, 6, 8 (Lt L = 10.2); -->Tdm lead @ 89.9
8	11.38	UDL spans: 1, 3, 5, 7; -->Tdm lead @ 76.6	UDL spans: 2, 4, 6, 8; -->Tdm lead @ 91.0

Max LL Moments - Critical Case Desription

Span	X	(+)Moments	(-)Moments
1	0.00	N/A	N/A

VQ-093
Rutland, VT
Steel Truss: Ripley Road over Otter Creek

1	1.14	UDL spans: 1, 3, 5, 7; –>Tdm lead @ 5.1	UDL spans: 2, 4, 6, 8; –>Tdm laad @ 18.1
1	2.28	UDL spans: 1, 3, 5, 7; –>Tdm lead @ 6.3	UDL spans: 2, 4, 8, 8; –>Tdm laad @ 18.1
1	3.41	UDL spans: 1, 3, 5, 7; –>Tdm lead @ 7.4	UDL spans: 2, 4, 6, 8; –>Tdm lead @ 18.1
1	4.55	UDL spans: 1, 3, 5, 7; –>Trk laad [var s = 22.5797101449275] @ 41	UDL spans: 2, 4, 6, 8; –>Tdm lead @ 18.1
1	5.69	UDL spans: 1, 3, 5, 7; –>Trk lead [var s = 21.4202898550725] @ 41	UDL spans: 2, 4, 6, 8; –>Tdm lead @ 18.1
1	6.83	UDL spans: 1, 3, 5, 7; –>Trk lead [var s = 20.2608695652174] @ 41	UDL spans: 2, 4, 8, 8; –>Tdm lead @ 18.1
1	7.96	UDL spans: 1, 3, 5, 7; –>Trk lead [var s = 19.1014492753623] @ 41	UDL spans: 2, 4, 6, 8; –>Tdm laad @ 18.1
1	9.10	UDL spans: 1 (Rt L = 8.4), 3, 5, 7; –>Trk lead [var s = 17.942028985	UDL spans: 1 (Lt L = 2.9), 2, 4, 6, 8; –>Dbl Tdm lead [Tnd spa = 26] @ 18.2
1	10.24	UDL spans: 1 (Rt L = 2.7), 3, 5, 7; –>Trk laad [var s = 16.76260869	UDL spans: 1 (Lt L = 8.7), 2, 4, 6, 8; –>Trk lead [var s = 14] @ 31.2
1	11.38	UDL spans: 3, 5, 7; –>Tdm lead @ 29.8	UDL spans: 1, 2, 4, 6, 8; <–Trk rear [var s = 14] @ 18.4
2	0.00	UDL spans: 3, 5, 7; –>Tdm laad @ 29.8	UDL spans: 1, 2, 4, 6, 8; <–Trk rear [var s = 14] @ 18.4
2	1.14	UDL spans: 2 (Lt L = 3.2), 3, 5, 7; –>Trk laad [var s = 14.463788115	UDL spans: 1, 2 (Rt L = 8.2), 4, 6, 8; –>Tdm lead @ 8.2
2	2.28	UDL spans: 2, 3; –>Trk lead [var s = 14] @ 27.7	UDL spans: 1, 4, 5, 6, 7, 8; –>Tdm laad @ 8.2
2	3.41	UDL spans: 2, 4, 6, 8; –>Trk lead [var s = 23.7391304347826] @ 52	UDL spans: 1, 3, 5, 7; –>Tdm lead @ 8.2
2	4.55	UDL spans: 2, 4, 6, 8; –>Trk lead [var s = 22.5797101449275] @ 52	UDL spans: 1, 3, 5, 7; –>Trk lead [var s = 20.4927536231884] @ 41.1
2	5.69	UDL spans: 2, 4, 6, 8; –>Trk laad [var s = 21.4202898550725] @ 52	UDL spans: 1, 3, 5, 7; –>Trk lead [var s = 20.4927536231884] @ 41.1
2	8.83	UDL spans: 2, 4, 6, 8; –>Trk laad [var s = 20.2608695652174] @ 52	UDL spans: 1, 3, 5, 7; <–Trk rear [var s = 20.4927536231884] @ 27.1
2	7.96	UDL spans: 2, 4, 6, 8; –>Trk lead [var s = 19.1014492753623] @ 52	UDL spans: 1, 3, 5, 7; –>Tdm lead @ 29.4
2	9.10	UDL spans: 1, 2 (Rt L = 8.9), 4, 6, 8; <–Trk rear [var s = 17.9420285	UDL spans: 2 (Lt L = 2.4), 3, 5, 7; –>Tdm laad @ 28.4
2	10.24	UDL spans: 1, 2 (Rt L = 2.9), 4, 6, 8; <–Trk rear [var s = 16.7826086	UDL spans: 2 (Lt L = 8.5), 3, 5, 7; –>Tdm lead @ 29.4
2	11.38	UDL spans: 1, 4, 6, 8; <–Trk rear [var s = 30] @ 37.6	UDL spans: 2, 3, 5, 7; <–Trk rear [var s = 14] @ 29.8
3	0.00	UDL spans: 1, 4, 6, 8; <–Trk rear [var s = 30] @ 37.6	UDL spans: 2, 3, 5, 7; <–Trk rear [var s = 14] @ 29.8
3	1.14	UDL spans: 1, 3 (Lt L = 2.9), 4, 6, 8; –>Trk lead [var s = 17.2463768	UDL spans: 2, 3 (Rt L = 8.4), 5, 7; –>Tdm lead @ 19.8
3	2.28	UDL spans: 1, 3 (Lt L = 9.1), 4, 8, 8; –>Trk lead [var s = 18.4057971	UDL spans: 2, 3 (Rt L = 2.3), 5, 7; –>Tdm lead @ 19.8
3	3.41	UDL spans: 1, 3, 5, 7; –>Trk lead [var s = 19.5652173913043] @ 40	UDL spans: 2, 4, 6, 8; –>Tdm laad @ 19.8
3	4.55	UDL spans: 1, 3, 5, 7; –>Trk laad [var s = 20.7245376811594] @ 41	UDL spans: 2, 4, 8, 8; –>Trk lead [var s = 20.0289855072464] @ 52.5
3	5.69	UDL spans: 1, 3, 5, 7; –>Trk lead [var s = 21.8840579710145] @ 42	UDL spans: 2, 4, 8, 8; –>Trk laad [var s = 20.0289855072464] @ 52.5
3	6.83	UDL spans: 1, 3, 5, 7; –>Trk lead [var s = 20.2608895852174] @ 63	UDL spans: 2, 4, 6, 8; <–Trk rear [var s = 20.0289855072464] @ 38.4
3	7.96	UDL spans: 1, 3, 5, 7; –>Trk lead [var s = 19.1014492753623] @ 63	UDL spans: 2, 4, 6, 8; –>Tdm lead @ 40.8
3	9.10	UDL spans: 2, 3 (Rt L = 9.0), 5, 7; <–Trk rear [var s = 17.942028985	UDL spans: 1, 3 (Lt L = 2.4), 4, 8, 8; –>Tdm lead @ 40.8
3	10.24	UDL spans: 2, 3 (Rt L = 2.9), 5, 7; <–Trk rear [var s = 16.76260869	UDL spans: 1, 3 (Lt L = 8.4), 4, 6, 8; –>Tdm lead @ 40.8
3	11.38	UDL spans: 2, 5, 7; <–Trk rear [var s = 30] @ 49.2	UDL spans: 1, 3, 4, 8, 8; –>Trk lead [var s = 14] @ 55.1
4	0.00	UDL spans: 2, 5, 7; <–Trk rear [var s = 30] @ 49.2	UDL spans: 1, 3, 4, 6, 8; –>Trk lead [var s = 14] @ 55.1
4	1.14	UDL spans: 2, 4 (Lt L = 2.9), 5, 7; –>Trk lead [var s = 16.782608895	UDL spans: 1, 3, 4 (Rt L = 8.4), 8, 8; –>Tdm lead @ 31.4
4	2.28	UDL spans: 2, 4 (Lt L = 9.0), 5, 7; –>Trk lead [var s = 17.942028985	UDL spans: 1, 3, 4 (Rt L = 2.4), 8, 8; –>Tdm lead @ 31.4
4	3.41	UDL spans: 2, 4, 6, 8; –>Trk laad [var s = 19.1014492753623] @ 51	UDL spans: 1, 3, 5, 7; –>Tdm lead @ 31.4
4	4.55	UDL spans: 2, 4, 8, 8; –>Trk laad [var s = 20.2608695652174] @ 52	UDL spans: 1, 3, 5, 7; –>Trk lead [var s = 20.0289855072464] @ 63.8
4	5.69	UDL spans: 2, 4, 6, 8; –>Trk lead [var s = 21.4202898550725] @ 53	UDL spans: 1, 3, 5, 7; –>Trk lead [var s = 20.0289855072464] @ 63.8
4	6.83	UDL spans: 2, 4, 6, 8; –>Trk laad [var s = 20.2608695652174] @ 75	UDL spans: 1, 3, 5, 7; <–Trk rear [var s = 20.0289855072464] @ 49.8
4	7.96	UDL spans: 2, 4, 6, 8; –>Trk lead [var s = 19.1014492753623] @ 75	UDL spans: 1, 3, 5, 7; –>Tdm lead @ 52.2
4	9.10	UDL spans: 1, 3, 4 (Rt L = 9.0), 6, 8; <–Trk rear [var s = 17.9420285	UDL spans: 2, 4 (Lt L = 2.4), 5, 7; –>Tdm lead @ 52.2
4	10.24	UDL spans: 1, 3, 4 (Rt L = 2.9), 6, 8; <–Trk rear [var s = 16.7826086	UDL spans: 2, 4 (Lt L = 8.4), 5, 7; –>Tdm lead @ 52.2
4	11.38	UDL spans: 1, 3, 6, 8; <–Trk rear [var s = 30] @ 60.6	UDL spans: 2, 4, 5, 7; –>Trk lead [var s = 14] @ 66.4
5	0.00	UDL spans: 1, 3, 6, 8; <–Trk rear [var s = 30] @ 60.6	UDL spans: 2, 4, 5, 7; –>Trk lead [var s = 14] @ 66.4
5	1.14	UDL spans: 1, 3, 5 (Lt L = 2.9), 6, 8; –>Trk lead [var s = 16.7826086	UDL spans: 2, 4, 5 (Rt L = 8.4), 7; –>Tdm lead @ 42.8
5	2.28	UDL spans: 1, 3, 5 (Lt L = 9.0), 8, 8; –>Trk lead [var s = 17.9420289	UDL spans: 2, 4, 5 (Rt L = 2.4), 7; –>Tdm lead @ 42.8
5	3.41	UDL spans: 1, 3, 5, 7; –>Trk lead [var s = 19.1014492753623] @ 62	UDL spans: 2, 4, 6, 8; –>Tdm lead @ 42.8
5	4.55	UDL spans: 1, 3, 5, 7; –>Trk laad [var s = 20.2608695652174] @ 64	UDL spans: 2, 4, 8, 8; –>Trk lead [var s = 20.0289855072464] @ 75.2
5	5.69	UDL spans: 1, 3, 5, 7; –>Trk lead [var s = 21.4202898550725] @ 86	UDL spans: 2, 4, 8, 8; <–Trk rear [var s = 20.0289855072464] @ 81.2
5	6.83	UDL spans: 1, 3, 5, 7; –>Trk lead [var s = 20.2608695652174] @ 86	UDL spans: 2, 4, 6, 8; <–Trk rear [var s = 20.0289855072464] @ 61.2
5	7.96	UDL spans: 1, 3, 5, 7; –>Trk lead [var s = 19.1014492753623] @ 86	UDL spans: 2, 4, 8, 8; –>Tdm lead @ 63.6
5	9.10	UDL spans: 2, 4, 5 (Rt L = 9.0), 7; <–Trk rear [var s = 17.942028985	UDL spans: 1, 3, 5 (Lt L = 2.4), 6, 8; –>Tdm lead @ 63.6
5	10.24	UDL spans: 2, 4, 5 (Rt L = 2.9), 7; <–Trk rear [var s = 16.782608695	UDL spans: 1, 3, 5 (Lt L = 8.4), 8, 8; –>Tdm laad @ 63.8
5	11.38	UDL spans: 2, 4, 7; –>Trk lead [var s = 30] @ 85.8	UDL spans: 1, 3, 5, 6, 8; <–Trk rear [var s = 14] @ 63.9
6	0.00	UDL spans: 2, 4, 7; –>Trk lead [var s = 30] @ 85.8	UDL spans: 1, 3, 5, 6, 8; <–Trk rear [var s = 14] @ 63.9
6	1.14	UDL spans: 2, 4, 6 (Lt L = 2.9), 7; –>Trk lead [var s = 16.782808695	UDL spans: 1, 3, 5, 6 (Rt L = 8.4), 8; –>Tdm lead @ 54.2
6	2.28	UDL spans: 2, 4, 6 (Lt L = 9.0), 7; –>Trk lead [var s = 17.942028985	UDL spans: 1, 3, 5, 6 (Rt L = 2.4), 8; –>Tdm lead @ 54.2
6	3.41	UDL spans: 2, 4, 6, 8; –>Trk lead [var s = 19.1014492753823] @ 74	UDL spans: 1, 3, 5, 7; –>Tdm lead @ 54.2
6	4.55	UDL spans: 2, 4, 6, 8; –>Trk lead [var s = 20.2608695652174] @ 75	UDL spans: 1, 3, 5, 7; –>Trk lead [var s = 20.0289855072464] @ 86.6
6	5.89	UDL spans: 2, 4, 6, 8; –>Trk lead [var s = 21.8840579710145] @ 95	UDL spans: 1, 3, 5, 7; <–Trk rear [var s = 20.0289855072464] @ 72.6
6	6.83	UDL spans: 2, 4, 8, 8; –>Trk laad [var s = 20.7246370811594] @ 95	UDL spans: 1, 3, 5, 7; <–Trk rear [var s = 20.0289855072464] @ 72.6
6	7.96	UDL spans: 2, 4, 6, 8; –>Trk lead [var s = 19.5652173913043] @ 95	UDL spans: 1, 3, 5, 7; –>Tdm lead @ 75.2
6	9.10	UDL spans: 1, 3, 5, 6 (Rt L = 9.1), 8; <–Trk rear [var s = 18.4057971	UDL spans: 2, 4, 6 (Lt L = 2.3), 7; –>Tdm laad @ 75.2
6	10.24	UDL spans: 1, 3, 5, 6 (Rt L = 3.0), 8; <–Trk rear [var s = 17.2463768	UDL spans: 2, 4, 6 (Lt L = 8.4), 7; –>Tdm laad @ 75.2
8	11.38	UDL spans: 1, 3, 5, 8; –>Trk lead [var s = 30] @ 97.4	UDL spans: 2, 4, 6, 7; –>Trk lead [var s = 14] @ 89.2
7	0.00	UDL spans: 1, 3, 5, 8; –>Trk lead [var s = 30] @ 97.4	UDL spans: 2, 4, 8, 7; –>Trk lead [var s = 14] @ 89.2
7	1.14	UDL spans: 1, 3, 5, 7 (Lt L = 2.9), 8; –>Trk lead [var s = 18.7826086	UDL spans: 2, 4, 6, 7 (Rt L = 8.5); –>Tdm laad @ 65.6
7	2.28	UDL spans: 1, 3, 5, 7 (Lt L = 8.9), 8; –>Trk lead [var s = 17.9420289	UDL spans: 2, 4, 8, 7 (Rt L = 2.4); –>Tdm lead @ 65.6
7	3.41	UDL spans: 1, 3, 5, 7; –>Trk laad [var s = 19.1014492753623] @ 85	UDL spans: 2, 4, 6, 8; –>Tdm lead @ 65.6
7	4.55	UDL spans: 1, 3, 5, 7; –>Trk laad [var s = 20.2608895652174] @ 86	UDL spans: 2, 4, 6, 8; –>Trk laad [var s = 20.4927538231884] @ 98.4
7	5.69	UDL spans: 1, 3, 5, 7; –>Trk lead [var s = 21.4202898550725] @ 87	UDL spans: 2, 4, 6, 8; <–Trk rear [var s = 20.4927536231884] @ 84.4

VQ-093
Rutland, VT
Steel Truss: Ripley Road over Otter Creek

8 of 8

7	6.83	*UDL spans: 1, 3, 5, 7; -->Trk lead [var s = 22.5797101449275] @ 85*	*UDL spans: 2, 4, 6, 8; <--Trk rear [var s = 20.4927536231884] @ 84.4*
7	7.96	*UDL spans: 1, 3, 5, 7; -->Trk lead [var s = 23.7391304347826] @ 90*	*UDL spans: 2, 4, 6, 8; -->Tdm lead @ 88.8*
7	9.10	*UDL spans: 1, 3, 5, 7; -->Trk lead [var s = 14] @ 91.4*	*UDL spans: 2, 4, 6, 8; -->Tdm lead @ 86.8*
7	10.24	*UDL spans: 2, 4, 6, 7 (Rt L = 3.2); -->Trk lead [var s = 14.4637681159*	*UDL spans: 1, 3, 5, 7 (Lt L = 8.2), 8; -->Tdm lead @ 86.8*
7	11.38	*UDL spans: 2, 4, 6; -->Tdm lead @ 65.2*	*UDL spans: 1, 3, 5, 7, 8; -->Trk lead [var s = 14] @ 100.6*
8	0.00	*UDL spans: 2, 4, 6; -->Tdm lead @ 65.2*	*UDL spans: 1, 3, 5, 7, 8; -->Trk lead [var s = 14] @ 100.6*
8	1.14	*UDL spans: 2, 4, 6, 8 (Lt L = 2.7); -->Trk lead [var s = 16.782608695*	*UDL spans: 1, 3, 5, 7, 8 (Rt L = 8.7); <--Trk rear [var s = 14] @ 87.8*
8	2.28	*UDL spans: 2, 4, 6, 8 (Lt L = 8.4); -->Trk lead [var s = 17.942028985*	*UDL spans: 1, 3, 5, 7, 8 (Rt L = 2.9); -->Tdm lead @ 76.9*
8	3.41	*UDL spans: 2, 4, 6, 8; -->Trk lead [var s = 19.1014492753623] @ 97*	*UDL spans: 1, 3, 5, 7; -->Tdm lead @ 76.9*
8	4.55	*UDL spans: 2, 4, 6, 8; -->Trk lead [var s = 20.2608695652174] @ 96*	*UDL spans: 1, 3, 5, 7; -->Tdm lead @ 76.9*
8	5.69	*UDL spans: 2, 4, 6, 8; -->Trk lead [var s = 21.4202898550725] @ 95*	*UDL spans: 1, 3, 5, 7; -->Tdm lead @ 76.9*
8	6.83	*UDL spans: 2, 4, 6, 8; -->Trk lead [var s = 22.5797101449275] @ 10*	*UDL spans: 1, 3, 5, 7; -->Tdm lead @ 76.9*
8	7.96	*UDL spans: 2, 4, 6, 8; -->Tdm lead @ 87.6*	*UDL spans: 1, 3, 5, 7; -->Tdm lead @ 78.9*
8	9.10	*UDL spans: 2, 4, 6, 8; -->Tdm lead @ 88.7*	*UDL spans: 1, 3, 5, 7; -->Tdm lead @ 78.9*
8	10.24	*UDL spans: 2, 4, 6, 8; -->Tdm lead @ 89.9*	*UDL spans: 1, 3, 5, 7; -->Tdm lead @ 76.9*
8	11.38	*N/A*	*N/A*

VQ-093
Rutland, VT
Steel Truss: Riplay Road ovar Otter Creek

Exterior Strip
negative moment 1 of 8

Analysis ID = 4

Loading Type: Live Load		Units				
Modulus of Elasticity (E)		Force	Length			
		All input parameters must be in consistent units. Output values are in the same units as input.	Units used to specify span L are considered master units. Master units are used for all input and output data except parameters on the right are in sub units. Specify number of sub units per one master unit in the Master/Sub field (e.g. 1000 for m/mm or 12 for ft/in).		Parameter	Master/Sub
					I (sub⁴)	1
					E (force/sub²)	1
					Settl. (sub)	1
Eo =	1	Force Unit Name:	kip	Master Length Unit Name: feet	Defl. (sub)	1
x =	1	Note: Force and master length unit names above have no effect on analysis and are for information only				

$E = Eo \times 10^x$

	Supports									
	Supp 1	Supp 2	Supp 3	Supp 4	Supp 5	Supp 6	Supp 7	Supp 8	Supp 9	Supp 10
Type	pin	pin	pin	pin	pin	pin	pin	pin	pin	

		Spans								
		Span 1	Span 2	Span 3	Span 4	Span 5	Span 6	Span 7	Span 8	Span 9
Segment 1	L	11.375	11.375	11.375	11.375	11.375	11.375	11.375	11.375	
	I	1	1	1	1	1	1	1	1	
Segment 2	L									
	I									
Segment 3	L									
	I									
Segment 4	L									
	I									
Segment 5	L									
	I									
Segment 6	L									
	I									
Segment 7	L									
	I									
Segment 8	L									
	I									
Segment 9	L									
	I									
Segment 10	L									
	I									
Segment 11	L									
	I									
Segment 12	L									
	I									
Segment 13	L									
	I									
Span L =		11.375	11.375	11.375	11.375	11.375	11.375	11.375	11.375	0

Live Load --> Lane (UDL) combined with Truck or Tandem

Use lana combined with truck or tandam, whichavar produca maximum advarse force effect

Lane Loading:

UDL =	0.011

Truck Loading:

Laad axle P1 =	4
axla P2 =	16
axla P3 =	16
P1/P2 Spa =	14
P2/P3 Spa =	vary 14 to 30

Tandam Loading:

axle P =	12.5
axle Spa =	4

VQ-093
Rutland, VT
Steel Truss: Riplay Road over Otter Creak

In addition to lane combined with single truck/tandam, calculate moments in (-)M regions and max reactions at intarmediata supports dua to lane combinad with two trucks placad in critical locations in adjacant to intarmediata support spans. Do the sama for two tandems. Tha following applies:

2-Trucks:

Constant P2/P3 Spa =	14
Min spa between 2nd trk laad/1st trk raar axles =	50
[Lana+Double Trk] Raduct Factor (axcept raact) =	0.9
[Lana+DoubleTrk] Reaction Reduct Factor =	0.9

2-Tandams:

Axla P =	12.5
Min spa between tandems =	26
Max spa batwaen tandems =	40
[Lane+Double Tnd] Reduct Factor (axcapt react) =	1
[Lane+DoubleTnd] Reaction Raduct Factor =	1

Load Multipliars:

Lana m =	1
Truck/Tandam m =	1.33

Specified Option: Neglect axlas that raduce adverse forca affacts

Note:
Live Load is based on HL-93 (AASHTO LRFD) loading

Max LL Vertical Reactions & Corresponding Rotstions

	----Max Reactions----		----Min Reactions----	
Support	max R	Rotation	min R	Rotation
1	26.09	-10.5658	-2.22	4.7844
2	31.90	2.1740	-3.57	2.5640
3	31.38	0.0126	-6.22	-0.3482
4	31.36	0.0013	-5.75	-0.0030
5	31.36	0.0000	-5.72	0.0177
6	31.36	-0.0013	-5.75	0.0030
7	31.38	-0.0126	-8.22	0.3482
8	31.90	-2.5209	-3.57	-2.5640
9	26.09	10.5656	-2.22	-4.7844

Max LL Rotations & Corresponding Vertical Reactions

	----Pos Rotations----		----Nag Rotations----	
Support	(+)Rot	Raact	(-)Rot	React
1	4.7947	-2.22	-17.8941	15.88
2	11.1010	24.05	-9.5894	20.91
3	9.1033	22.18	-9.0250	12.40
4	8.9854	21.95	-8.9572	21.92
5	8.9552	21.93	-8.9552	21.93
6	8.9572	21.92	-8.9654	21.95
7	9.0250	12.40	-9.1033	22.18
8	9.5894	20.91	-11.1010	24.05
9	17.8941	15.88	-4.7947	-2.22

Max LL Shears & Corresponding Moments

		----Pos Shaars---		----Nag Shaars----		
Span	X	(+)V	M	(-)V	M	
1	0.00	28.1	0.0	-2.2	0.0	*supp 1*
1	1.14	22.1	25.1	-4.4	19.2	*pt 0.1*
1	2.28	18.2	41.5	-7.0	32.5	*pt 0.2*
1	3.41	14.6	49.7	-9.5	40.4	*pt 0.3*
1	4.55	11.3	51.5	-11.7	43.8	*pt 0.4*
1	5.69	9.0	51.0	-13.7	43.2	*pt 0.5*
1	6.83	6.8	46.3	-16.9	45.4	*pt 0.6*
1	7.96	4.8	38.2	-20.4	36.0	*pt 0.7*
1	9.10	3.1	27.9	-23.7	21.0	*pt 0.8*
1	10.24	1.6	16.4	-26.6	2.0	*pt 0.9*
1	11.38	0.6	6.8	-29.2	-19.2	*supp 2*
2	0.00	27.8	-15.0	-3.0	6.8	*supp 2*
2	1.14	24.5	5.9	-3.9	15.5	*pt 0.1*
2	2.28	21.0	22.7	-5.9	24.8	*pt 0.2*
2	3.41	17.3	34.3	-7.9	31.8	*pt 0.3*

VQ-093
Rutland, VT
Steel Truss: Ripley Road over Otter Creek

2	4.55	14.2	34.7	-10.0	36.2	*pt 0.4*
2	5.69	12.3	35.9	-12.0	37.7	*pt 0.5*
2	6.83	10.3	34.8	-14.1	39.4	*pt 0.8*
2	7.96	8.3	30.7	-17.8	33.3	*pt 0.7*
2	9.10	6.3	24.5	-21.4	21.3	*pt 0.8*
2	10.24	4.4	16.6	-24.9	4.2	*pt 0.9*
2	11.38	3.8	9.0	-28.0	-16.4	*supp 3*
3	0.00	27.9	-18.1	-3.0	7.3	*supp 3*
3	1.14	24.7	4.5	-4.0	16.1	*pt 0.1*
3	2.28	21.2	21.4	-5.8	24.5	*pt 0.2*
3	3.41	17.5	33.2	-7.8	31.2	*pt 0.3*
3	4.55	14.0	39.8	-9.9	35.7	*pt 0.4*
3	5.69	11.9	37.2	-11.9	37.3	*pt 0.5*
3	6.83	9.9	35.6	-14.1	40.1	*pt 0.6*
3	7.96	7.8	31.2	-17.6	33.1	*pt 0.7*
3	9.10	5.8	24.4	-21.2	21.3	*pt 0.8*
3	10.24	4.0	16.0	-24.7	4.4	*pt 0.9*
3	11.38	3.1	7.4	-27.9	-16.2	*supp 4*
4	0.00	27.9	-16.2	-3.0	7.3	*supp 4*
4	1.14	24.7	4.4	-4.0	16.0	*pt 0.1*
4	2.28	21.2	21.3	-5.8	24.4	*pt 0.2*
4	3.41	17.6	33.1	-7.8	31.2	*pt 0.3*
4	4.55	14.0	39.8	-9.8	35.7	*pt 0.4*
4	5.69	11.9	37.3	-11.9	37.3	*pt 0.5*
4	6.83	9.9	35.7	-14.0	39.8	*pt 0.6*
4	7.96	7.8	31.2	-17.6	33.1	*pt 0.7*
4	9.10	5.8	24.4	-21.2	21.3	*pt 0.8*
4	10.24	4.0	16.0	-24.7	4.4	*pt 0.9*
4	11.38	3.0	7.3	-27.9	-16.2	*supp 5*
5	0.00	27.9	-16.2	-3.0	7.3	*supp 5*
5	1.14	24.7	4.4	-4.0	16.0	*pt 0.1*
5	2.28	21.2	21.3	-5.8	24.4	*pt 0.2*
5	3.41	17.6	33.1	-7.8	31.2	*pt 0.3*
5	4.55	14.0	39.8	-9.9	35.6	*pt 0.4*
5	5.69	11.9	37.3	-11.9	37.3	*pt 0.5*
5	6.83	9.9	35.7	-14.0	39.8	*pt 0.6*
5	7.96	7.8	31.2	-17.6	33.1	*pt 0.7*
5	9.10	5.8	24.4	-21.2	21.3	*pt 0.8*
5	10.24	4.0	16.0	-24.7	4.4	*pt 0.9*
5	11.38	3.0	7.3	-27.9	-16.2	*supp 8*
6	0.00	27.9	-16.2	-3.1	7.4	*supp 6*
6	1.14	24.7	4.4	-4.0	16.0	*pt 0.1*
6	2.28	21.2	21.3	-5.8	24.4	*pt 0.2*
6	3.41	17.6	33.1	-7.8	31.2	*pt 0.3*
6	4.55	14.1	40.1	-9.9	35.6	*pt 0.4*
6	5.69	11.9	37.3	-11.9	37.2	*pt 0.5*
8	6.83	9.9	35.7	-14.0	39.8	*pt 0.6*
6	7.96	7.8	31.2	-17.5	33.2	*pt 0.7*
6	9.10	5.8	24.5	-21.2	21.4	*pt 0.8*
6	10.24	4.0	16.1	-24.7	4.5	*pt 0.9*
6	11.38	3.0	7.3	-27.9	-16.1	*supp 7*
7	0.00	28.0	-16.4	-3.8	9.0	*supp 7*
7	1.14	24.9	4.2	-4.4	16.6	*pt 0.1*
7	2.28	21.4	21.3	-6.3	24.5	*pt 0.2*
7	3.41	17.8	33.3	-8.3	30.7	*pt 0.3*
7	4.55	14.1	39.4	-10.3	34.6	*pt 0.4*
7	5.89	12.0	37.7	-12.3	35.9	*pt 0.5*
7	6.83	10.0	36.2	-14.2	34.7	*pt 0.6*
7	7.96	7.9	31.8	-17.3	34.3	*pt 0.7*
7	9.10	5.9	24.8	-21.0	22.7	*pt 0.8*
7	10.24	3.9	15.5	-24.5	5.9	*pt 0.9*
7	11.38	3.0	6.8	-27.8	-15.0	*supp 8*
8	0.00	29.2	-19.2	-0.6	6.8	*supp 8*
8	1.14	28.6	2.0	-1.6	16.4	*pt 0.1*
8	2.28	23.7	21.0	-3.1	27.9	*pt 0.2*
8	3.41	20.4	36.0	-4.8	38.2	*pt 0.3*
8	4.55	16.9	45.4	-6.8	46.3	*pt 0.4*
8	5.69	13.7	43.2	-9.0	51.0	*pt 0.5*
8	6.83	11.7	43.8	-11.3	51.5	*pt 0.6*
8	7.96	9.5	40.4	-14.6	49.7	*pt 0.7*
8	9.10	7.0	32.5	-18.2	41.5	*pt 0.8*

VQ-093
Rutland, VT
Steel Truss: Ripley Road over Otter Creek

4 of 8

8	10.24	4.4	19.2	-22.1	25.1	*pt 0.9*
8	11.38	2.2	0.0	-26.1	0.0	*supp 9*

Max LL Moments & Corresponding Shears

		----Pos Moments----		----Neg Moments----		
Span	X	(+)M	V	(-)M	V	
1	0.00	0.0	0.0	0.0	0.0	*supp 1*
1	1.14	25.1	22.1	-2.5	-2.2	*pt 0.1*
1	2.28	41.5	18.2	-5.1	-2.2	*pt 0.2*
1	3.41	49.8	14.6	-7.6	-2.2	*pt 0.3*
1	4.55	51.6	11.3	-10.1	-2.2	*pt 0.4*
1	5.69	51.1	-12.3	-12.6	-2.2	*pt 0.5*
1	6.83	46.3	-14.5	-15.2	-2.2	*pt 0.6*
1	7.96	38.3	-16.5	-17.7	-2.2	*pt 0.7*
1	9.10	27.9	-18.3	-20.2	-2.2	*pt 0.8*
1	10.24	16.4	-19.7	-24.2	-9.0	*pt 0.9*
1	11.38	6.8	0.6	-36.0	-11.5	*supp 2*
2	0.00	6.8	-3.0	-36.0	10.0	*supp 2*
2	1.14	15.5	17.4	-29.5	3.8	*pt 0.1*
2	2.28	24.8	17.1	-25.2	3.8	*pt 0.2*
2	3.41	34.9	16.0	-21.0	3.8	*pt 0.3*
2	4.55	41.5	13.6	-17.5	0.5	*pt 0.4*
2	5.69	44.0	11.1	-16.9	0.5	*pt 0.5*
2	6.83	42.4	-12.7	-16.3	0.5	*pt 0.6*
2	7.96	36.8	-15.1	-16.9	-3.0	*pt 0.7*
2	9.10	28.2	-16.6	-20.3	-3.0	*pt 0.8*
2	10.24	18.0	-18.5	-23.7	-3.0	*pt 0.9*
2	11.38	11.8	3.3	-32.0	-9.8	*supp 3*
3	0.00	11.8	-2.9	-32.0	9.5	*supp 3*
3	1.14	19.0	18.4	-24.2	3.1	*pt 0.1*
3	2.28	29.1	16.5	-20.7	3.1	*pt 0.2*
3	3.41	37.5	14.8	-17.2	3.1	*pt 0.3*
3	4.55	42.7	12.4	-15.3	0.0	*pt 0.4*
3	5.69	43.9	-11.4	-15.2	0.0	*pt 0.5*
3	6.83	42.1	-12.6	-15.2	0.0	*pt 0.6*
3	7.96	36.7	-15.0	-16.9	-3.0	*pt 0.7*
3	9.10	28.1	-16.6	-20.3	-3.0	*pt 0.8*
3	10.24	17.9	-18.5	-23.8	-3.1	*pt 0.9*
3	11.38	10.9	2.9	-31.7	-9.5	*supp 4*
4	0.00	10.9	-2.9	-31.7	9.7	*supp 4*
4	1.14	18.0	18.5	-23.8	3.1	*pt 0.1*
4	2.28	28.2	16.6	-20.4	3.0	*pt 0.2*
4	3.41	36.8	15.0	-16.9	3.0	*pt 0.3*
4	4.55	42.1	12.5	-15.1	0.0	*pt 0.4*
4	5.69	43.5	-11.3	-15.1	0.0	*pt 0.5*
4	6.83	42.1	-12.5	-15.1	0.0	*pt 0.6*
4	7.96	36.7	-15.0	-16.9	-3.0	*pt 0.7*
4	9.10	28.2	-16.6	-20.3	-3.0	*pt 0.8*
4	10.24	17.9	-18.5	-23.8	-3.1	*pt 0.9*
4	11.38	10.8	2.9	-31.6	-9.5	*supp 5*
5	0.00	10.8	-2.9	-31.6	9.7	*supp 5*
5	1.14	17.9	18.5	-23.8	3.1	*pt 0.1*
5	2.28	28.2	16.6	-20.3	3.0	*pt 0.2*
5	3.41	36.7	15.0	-16.9	3.0	*pt 0.3*
5	4.55	42.1	12.5	-15.1	0.0	*pt 0.4*
5	5.69	43.5	11.3	-15.1	0.0	*pt 0.5*
5	6.83	42.1	-12.5	-15.1	0.0	*pt 0.6*
5	7.96	36.8	-15.0	-16.9	-3.0	*pt 0.7*
5	9.10	28.2	-16.6	-20.4	-3.0	*pt 0.8*
5	10.24	18.0	-18.5	-23.8	-3.1	*pt 0.9*
5	11.38	10.9	2.9	-31.7	-9.7	*supp 6*
6	0.00	10.9	-2.9	-31.7	9.5	*supp 6*
6	1.14	17.9	18.5	-23.8	3.1	*pt 0.1*
6	2.28	28.1	16.6	-20.3	3.0	*pt 0.2*
6	3.41	36.7	15.0	-16.9	3.0	*pt 0.3*
6	4.55	42.1	12.6	-15.2	0.0	*pt 0.4*
6	5.69	43.9	11.4	-15.2	0.0	*pt 0.5*
6	6.83	42.7	-12.4	-15.3	0.0	*pt 0.6*
6	7.96	37.5	-14.8	-17.2	-3.1	*pt 0.7*
6	9.10	29.1	-16.5	-20.7	-3.1	*pt 0.8*
6	10.24	19.0	-18.4	-24.2	-3.1	*pt 0.9*

17

5 of 6

6	11.38	11.8	2.9	-32.0	-9.5	*supp 7*
7	0.00	11.8	-3.3	-32.0	9.8	*supp 7*
7	1.14	18.0	18.5	-23.7	3.0	*pt 0.1*
7	2.28	28.2	18.8	-20.3	3.0	*pt 0.2*
7	3.41	36.8	15.1	-16.9	3.0	*pt 0.3*
7	4.55	42.4	12.7	-16.3	-0.5	*pt 0.4*
7	5.69	44.0	-11.1	-16.9	-0.5	*pt 0.5*
7	6.83	41.5	-13.6	-17.5	-0.5	*pt 0.6*
7	7.96	34.9	-18.0	-21.0	-3.8	*pt 0.7*
7	9.10	24.8	-17.7	-25.2	-3.8	*pt 0.8*
7	10.24	15.5	-17.4	-29.5	-3.8	*pt 0.9*
7	11.38	6.8	3.0	-36.0	-10.0	*supp 8*
8	0.00	6.8	-0.6	-36.0	11.5	*supp 8*
8	1.14	16.4	19.7	-24.2	9.0	*pt 0.1*
8	2.28	27.9	18.3	-20.2	2.2	*pt 0.2*
8	3.41	38.3	16.5	-17.7	2.2	*pt 0.3*
8	4.55	46.3	14.5	-15.2	2.2	*pt 0.4*
8	5.69	51.1	12.3	-12.6	2.2	*pt 0.5*
8	6.83	51.6	-11.3	-10.1	2.2	*pt 0.8*
8	7.96	49.8	-14.6	-7.6	2.2	*pt 0.7*
8	9.10	41.5	-18.2	-5.1	2.2	*pt 0.8*
8	10.24	25.1	-22.1	-2.5	2.2	*pt 0.9*
8	11.38	0.0	0.0	0.0	0.0	*supp 9*

Max LL Reactions - Critical Case Desription

Support	(+)Reactions	(-)Reactions
1	*UDL spans: 1, 3, 5, 7; -->Tdm lead @ 4.0*	*UDL spans: 2, 4, 6, 8; -->Tdm lead @ 18.4*
2	*UDL spans: 1, 2, 4, 6, 8; -->Tdm lead @ 12.7*	*UDL spans: 3, 5, 7; -->Tdm lead @ 29.8*
3	*UDL spans: 2, 3, 5, 7; -->Tdm lead @ 24.8*	*UDL spans: 1, 4, 6, 8; <--Trk rear [var s = 30] @ 37.8*
4	*UDL spans: 1, 3, 4, 6, 8; -->Tdm lead @ 38.1*	*UDL spans: 2, 5, 7; <--Trk rear [var s = 30] @ 49.2*
5	*UDL spans: 2, 4, 5, 7; -->Tdm lead @ 47.5*	*UDL spans: 1, 3, 6, 8; <--Trk rear [var s = 30] @ 60.8*
6	*UDL spans: 1, 3, 5, 6, 8; -->Tdm lead @ 58.9*	*UDL spans: 2, 4, 7; -->Trk lead [var s = 30] @ 85.8*
7	*UDL spans: 2, 4, 6, 7; -->Tdm lead @ 70.3*	*UDL spans: 1, 3, 5, 8; -->Trk lead [var s = 30] @ 97.4*
8	*UDL spans: 1, 3, 5, 7, 8; -->Tdm lead @ 82.4*	*UDL spans: 2, 4, 6; -->Tdm lead @ 65.2*
9	*UDL spans: 2, 4, 6, 8; -->Tdm lead @ 91.0*	*UDL spans: 1, 3, 5, 7; -->Tdm lead @ 76.6*

Max LL Rotations - Critical Case Desription

Support	(+)Rotations	(-)Rotations
1	*UDL spans: 2, 4, 6, 8; -->Tdm lead @ 18.4*	*UDL spans: 1, 3, 5, 7; -->Tdm lead @ 7.0*
2	*UDL spans: 1, 3, 5, 7; -->Tdm lead @ 7.9*	*UDL spans: 2, 4, 8, 8; -->Tdm lead @ 18.4*
3	*UDL spans: 2, 4, 6, 8; -->Tdm lead @ 19.7*	*UDL spans: 1, 3, 5, 7; <--Trk rear [var s = 20.4927536231884] @ 27.1*
4	*UDL spans: 1, 3, 5, 7; -->Tdm lead @ 31.1*	*UDL spans: 2, 4, 8, 8; -->Tdm lead @ 41.1*
5	*UDL spans: 2, 4, 6, 8; -->Tdm lead @ 42.5*	*UDL spans: 1, 3, 5, 7; -->Tdm lead @ 52.5*
6	*UDL spans: 1, 3, 5, 7; -->Tdm lead @ 53.9*	*UDL spans: 2, 4, 6, 8; -->Tdm lead @ 63.9*
7	*UDL spans: 2, 4, 8, 8; -->Trk lead [var s = 20.4927536231884] @ 9*	*UDL spans: 1, 3, 5, 7; -->Tdm lead @ 75.3*
8	*UDL spans: 1, 3, 5, 7; -->Tdm lead @ 78.8*	*UDL spans: 2, 4, 6, 8; -->Tdm lead @ 87.1*
9	*UDL spans: 2, 4, 8, 8; -->Tdm lead @ 88.0*	*UDL spans: 1, 3, 5, 7; -->Tdm lead @ 76.8*

Max LL Shears - Critical Case Desription

Span	X	(+)Shears	(-)Shears
1	0.00	*UDL spans: 1, 3, 5, 7; -->Tdm lead @ 4.0*	*UDL spans: 2, 4, 6, 8; -->Tdm lead @ 18.4*
1	1.14	*UDL spans: 1 (Rt L = 10.2), 3, 5, 7; -->Tdm lead @ 5.1*	*UDL spans: 1 (Lt L = 1.1), 2, 4, 8, 8; -->Trk lead [var s = 14.463768115942] @ 29.6*
1	2.28	*UDL spans: 1 (Rt L = 9.1), 3, 5, 7; -->Tdm lead @ 6.3*	*UDL spans: 1 (Lt L = 2.3), 2, 4, 8, 8; -->Trk lead [var s = 14] @ 30.3*
1	3.41	*UDL spans: 1 (Rt L = 8.0), 3, 5, 7; -->Tdm lead @ 7.4*	*UDL spans: 1 (Lt L = 3.4), 2, 4, 6, 8; -->Trk lead [var s = 14] @ 31.4*
1	4.55	*UDL spans: 1 (Rt L = 8.8), 3, 5, 7; -->Trk lead [var s = 22.57971014*	*UDL spans: 1 (Lt L = 4.6), 2, 4, 8, 8; -->Trk lead [var s = 14] @ 32.5*
1	5.69	*UDL spans: 1 (Rt L = 5.7), 3, 5, 7; -->Trk lead [var s = 21.42028985*	*UDL spans: 1 (Lt L = 5.7), 2, 4, 6, 8; -->Trk lead [var s = 14] @ 33.7*
1	6.83	*UDL spans: 1 (Rt L = 4.8), 3, 5, 7; -->Trk lead [var s = 20.26086956*	*UDL spans: 1 (Lt L = 8.8), 2, 4, 6, 8; -->Tdm lead @ 8.8*
1	7.96	*UDL spans: 1 (Rt L = 3.4), 3, 5, 7; -->Trk lead [var s = 19.10144927*	*UDL spans: 1 (Lt L = 8.0), 2, 4, 6, 8; -->Tdm lead @ 8.0*
1	9.10	*UDL spans: 1 (Rt L = 2.3), 3, 5, 7; -->Trk lead [var s = 17.94202898*	*UDL spans: 1 (Lt L = 9.1), 2, 4, 6, 8; -->Tdm lead @ 9.1*
1	10.24	*UDL spans: 1 (Rt L = 1.1), 3, 5, 7; -->Trk lead [var s = 16.78260869*	*UDL spans: 1 (Lt L = 10.2), 2, 4, 6, 8; -->Tdm lead @ 10.2*
1	11.38	*UDL spans: 3, 5, 7; -->Tdm lead @ 29.8*	*UDL spans: 1, 2, 4, 6, 8; -->Tdm lead @ 11.4*
2	0.00	*UDL spans: 1, 2, 4, 6, 8; -->Tdm lead @ 15.4*	*UDL spans: 3, 5, 7; -->Tdm lead @ 29.8*
2	1.14	*UDL spans: 1, 2 (Rt L = 10.2), 4, 6, 8; -->Tdm lead @ 16.5*	*UDL spans: 2 (Lt L = 1.1), 3, 5, 7; -->Trk lead [var s = 14.463768115942] @ 41.0*
2	2.28	*UDL spans: 1, 2 (Rt L = 9.1), 4, 6, 8; -->Tdm lead @ 17.7*	*UDL spans: 2 (Lt L = 2.3), 3, 5, 7; -->Trk lead [var s = 14] @ 41.6*
2	3.41	*UDL spans: 1, 2 (Rt L = 8.0), 4, 6, 8; -->Tdm lead @ 18.8*	*UDL spans: 2 (Lt L = 3.4), 3, 5, 7; -->Trk lead [var s = 14] @ 42.8*
2	4.55	*UDL spans: 1, 2 (Rt L = 6.8), 4, 6, 8; -->Trk lead [var s = 14] @ 29.9*	*UDL spans: 2 (Lt L = 4.6), 3, 5, 7; -->Trk lead [var s = 14] @ 43.9*
2	5.69	*UDL spans: 1, 2 (Rt L = 5.7), 4, 6, 8; -->Trk lead [var s = 14] @ 31.1*	*UDL spans: 2 (Lt L = 5.7), 3, 5, 7; -->Trk lead [var s = 14] @ 45.1*
2	6.83	*UDL spans: 1, 2 (Rt L = 4.8), 4, 6, 8; -->Trk lead [var s = 14] @ 32.2*	*UDL spans: 2 (Lt L = 6.8), 3, 5, 7; -->Tdm lead @ 18.2*
2	7.96	*UDL spans: 1, 2 (Rt L = 3.4), 4, 6, 8; -->Trk lead [var s = 14] @ 33.3*	*UDL spans: 2 (Lt L = 8.0), 3, 5, 7; -->Tdm lead @ 19.3*
2	9.10	*UDL spans: 1, 2 (Rt L = 2.3), 4, 6, 8; -->Trk lead [var s = 14] @ 34.5*	*UDL spans: 2 (Lt L = 9.1), 3, 5, 7; -->Tdm lead @ 20.5*
2	10.24	*UDL spans: 1, 2 (Rt L = 1.1), 4, 8, 8; -->Trk lead [var s = 15.159420*	*UDL spans: 2 (Lt L = 10.2), 3, 5, 7; -->Tdm lead @ 21.6*

2	11.38	UDL spans: 1, 4, 6, 8; –>Tdm lead @ 7.9	UDL spans: 2, 3, 5, 7; –>Tdm lead @ 22.7
3	0.00	UDL spans: 2, 3, 5, 7; –>Tdm lead @ 26.8	UDL spans: 1, 4, 8, 8; –>Tdm lead @ 41.1
3	1.14	UDL spans: 2, 3 (Rt L = 10.2), 5, 7; –>Tdm laad @ 27.9	UDL spans: 1, 3 (Lt L = 1.1), 4, 6, 8; <–Trk rear [var s = 14.463768115942] @ 38.4
3	2.28	UDL spans: 2, 3 (Rt L = 9.1), 5, 7; –>Tdm lead @ 29.0	UDL spans: 1, 3 (Lt L = 2.3), 4, 6, 8; <–Trk rear [var s = 14] @ 39.0
3	3.41	UDL spans: 2, 3 (Rt L = 8.0), 5, 7; –>Tdm lead @ 30.2	UDL spans: 1, 3 (Lt L = 3.4), 4, 6, 8; –>Trk laad [var s = 14] @ 54.2
3	4.55	UDL spans: 2, 3 (Rt L = 6.8), 5, 7; <–Trk rear [var s = 22.579710144	UDL spans: 1, 3 (Lt L = 4.8), 4, 6, 8; –>Trk lead [var s = 14] @ 55.3
3	5.69	UDL spans: 2, 3 (Rt L = 5.7), 5, 7; –>Trk lead [var s = 14] @ 42.4	UDL spans: 1, 3 (Lt L = 5.7), 4, 6, 8; –>Trk lead [var s = 14] @ 56.4
3	6.83	UDL spans: 2, 3 (Rt L = 4.8), 5, 7; –>Trk laad [var s = 14] @ 43.6	UDL spans: 1, 3 (Lt L = 6.8), 4, 6, 8; –>Trk lead [var s = 23.0434782608696] @ 43.8
3	7.96	UDL spans: 2, 3 (Rt L = 3.4), 5, 7; –>Trk lead [var s = 14] @ 44.7	UDL spans: 1, 3 (Lt L = 8.0), 4, 6, 8; –>Tdm lead @ 30.7
3	9.10	UDL spans: 2, 3 (Rt L = 2.3), 5, 7; –>Trk lead [var s = 14] @ 45.9	UDL spans: 1, 3 (Lt L = 9.1), 4, 8, 8; –>Tdm lead @ 31.8
3	10.24	UDL spans: 2, 3 (Rt L = 1.1), 5, 7; –>Trk laad [var s = 14.69565217	UDL spans: 1, 3 (Lt L = 10.2), 4, 6, 8; –>Tdm lead @ 33.0
3	11.38	UDL spans: 2, 5, 7; –>Tdm lead @ 19.7	UDL spans: 1, 3, 4, 8, 8; –>Tdm lead @ 34.1
4	0.00	UDL spans: 1, 3, 4, 6, 8; –>Tdm lead @ 38.1	UDL spans: 2, 5, 7; –>Tdm lead @ 52.5
4	1.14	UDL spans: 1, 3, 4 (Rt L = 10.2), 6, 8; –>Tdm laad @ 39.3	UDL spans: 2, 4 (Lt L = 1.1), 5, 7; <–Trk rear [var s = 14.463768115942] @ 49.7
4	2.28	UDL spans: 1, 3, 4 (Rt L = 9.1), 6, 8; –>Tdm lead @ 40.4	UDL spans: 2, 4 (Lt L = 2.3), 5, 7; <–Trk rear [var s = 14] @ 50.4
4	3.41	UDL spans: 1, 3, 4 (Rt L = 8.0), 6, 8; –>Tdm lead @ 41.5	UDL spans: 2, 4 (Lt L = 3.4), 5, 7; –>Trk lead [var s = 14] @ 65.5
4	4.55	UDL spans: 1, 3, 4 (Rt L = 6.8), 6, 8; <–Trk rear [var s = 22.5797101	UDL spans: 2, 4 (Lt L = 4.8), 5, 7; –>Trk lead [var s = 14] @ 66.7
4	5.69	UDL spans: 1, 3, 4 (Rt L = 5.7), 6, 8; –>Trk lead [var s = 14] @ 53.8	UDL spans: 2, 4 (Lt L = 5.7), 5, 7; –>Trk laad [var s = 14] @ 67.8
4	6.83	UDL spans: 1, 3, 4 (Rt L = 4.6), 8, 8; –>Trk lead [var s = 14] @ 55.0	UDL spans: 2, 4 (Lt L = 6.8), 5, 7; –>Trk lead [var s = 22.5797101449275] @ 54.9
4	7.96	UDL spans: 1, 3, 4 (Rt L = 3.4), 8, 8; –>Trk laad [var s = 14] @ 56.1	UDL spans: 2, 4 (Lt L = 8.0), 5, 7; –>Tdm lead @ 42.1
4	9.10	UDL spans: 1, 3, 4 (Rt L = 2.3), 8, 8; –>Trk lead [var s = 14] @ 57.2	UDL spans: 2, 4 (Lt L = 9.1), 5, 7; –>Tdm lead @ 43.2
4	10.24	UDL spans: 1, 3, 4 (Rt L = 1.1), 6, 8; –>Trk lead [var s = 14.483768	UDL spans: 2, 4 (Lt L = 10.2), 5, 7; –>Tdm lead @ 44.4
4	11.38	UDL spans: 1, 3, 6, 8; –>Tdm lead @ 31.1	UDL spans: 2, 4, 5, 7; –>Tdm lead @ 45.5
5	0.00	UDL spans: 2, 4, 5, 7; –>Tdm lead @ 49.5	UDL spans: 1, 3, 6, 8; –>Tdm lead @ 63.9
5	1.14	UDL spans: 2, 4, 5 (Rt L = 10.2), 7; –>Tdm laad @ 50.6	UDL spans: 1, 3, 5 (Lt L = 1.1), 8, 8; <–Trk rear [var s = 14.463768115942] @ 61.1
5	2.28	UDL spans: 2, 4, 5 (Rt L = 9.1), 7; –>Tdm laad @ 51.8	UDL spans: 1, 3, 5 (Lt L = 2.3), 6, 8; <–Trk rear [var s = 14] @ 81.8
5	3.41	UDL spans: 2, 4, 5 (Rt L = 8.0), 7; –>Tdm lead @ 52.9	UDL spans: 1, 3, 5 (Lt L = 3.4), 8, 8; –>Trk lead [var s = 14] @ 76.9
5	4.55	UDL spans: 2, 4, 5 (Rt L = 6.8), 7; <–Trk rear [var s = 22.579710144	UDL spans: 1, 3, 5 (Lt L = 4.6), 6, 8; –>Trk lead [var s = 14] @ 78.0
5	5.69	UDL spans: 2, 4, 5 (Rt L = 5.7), 7; –>Trk lead [var s = 14] @ 85.2	UDL spans: 1, 3, 5 (Lt L = 5.7), 6, 8; –>Trk lead [var s = 14] @ 79.2
5	6.83	UDL spans: 2, 4, 5 (Rt L = 4.6), 7; –>Trk laad [var s = 14] @ 66.3	UDL spans: 1, 3, 5 (Lt L = 6.8), 6, 8; –>Trk lead [var s = 22.5797101449275] @ 66.3
5	7.98	UDL spans: 2, 4, 5 (Rt L = 3.4), 7; –>Trk lead [var s = 14] @ 67.5	UDL spans: 1, 3, 5 (Lt L = 8.0), 8, 8; –>Tdm laad @ 53.5
5	9.10	UDL spans: 2, 4, 5 (Rt L = 2.3), 7; –>Trk laad [var s = 14] @ 68.8	UDL spans: 1, 3, 5 (Lt L = 9.1), 6, 8; –>Tdm lead @ 54.6
5	10.24	UDL spans: 2, 4, 5 (Rt L = 1.1), 7; –>Trk lead [var s = 14.463768115	UDL spans: 1, 3, 5 (Lt L = 10.2), 6, 8; –>Tdm lead @ 55.7
5	11.38	UDL spans: 2, 4, 7; –>Tdm lead @ 42.5	UDL spans: 1, 3, 5, 6, 8; –>Tdm lead @ 56.9
6	0.00	UDL spans: 1, 3, 5, 8, 8; –>Tdm lead @ 60.9	UDL spans: 2, 4, 7; –>Tdm laad @ 75.3
6	1.14	UDL spans: 1, 3, 5, 6 (Rt L = 10.2), 8; –>Tdm lead @ 62.0	UDL spans: 2, 4, 6 (Lt L = 1.1), 7; <–Trk rear [var s = 14.695652173913] @ 72.7
6	2.28	UDL spans: 1, 3, 5, 8 (Rt L = 9.1), 8; –>Tdm lead @ 63.2	UDL spans: 2, 4, 6 (Lt L = 2.3), 7; <–Trk rear [var s = 14] @ 73.1
6	3.41	UDL spans: 1, 3, 5, 6 (Rt L = 8.0), 8; –>Tdm laad @ 64.3	UDL spans: 2, 4, 8 (Lt L = 3.4), 7; –>Trk lead [var s = 14] @ 88.3
6	4.55	UDL spans: 1, 3, 5, 8 (Rt L = 6.8), 8; <–Trk rear [var s = 23.0434782	UDL spans: 2, 4, 8 (Lt L = 4.6), 7; –>Trk lead [var s = 14] @ 89.4
6	5.69	UDL spans: 1, 3, 5, 6 (Rt L = 5.7), 8; –>Trk lead [var s = 14] @ 76.6	UDL spans: 2, 4, 6 (Lt L = 5.7), 7; –>Trk laad [var s = 14] @ 90.6
6	6.83	UDL spans: 1, 3, 5, 6 (Rt L = 4.6), 8; –>Trk lead [var s = 14] @ 77.7	UDL spans: 2, 4, 8 (Lt L = 6.8), 7; –>Trk lead [var s = 22.5797101449275] @ 77.7
6	7.96	UDL spans: 1, 3, 5, 6 (Rt L = 3.4), 8; –>Trk lead [var s = 14] @ 78.8	UDL spans: 2, 4, 6 (Lt L = 8.0), 7; –>Tdm lead @ 64.8
6	9.10	UDL spans: 1, 3, 5, 6 (Rt L = 2.3), 8; –>Trk lead [var s = 14] @ 80.0	UDL spans: 2, 4, 8 (Lt L = 9.1), 7; –>Tdm laad @ 66.0
6	10.24	UDL spans: 1, 3, 5, 6 (Rt L = 1.1), 8; –>Trk lead [var s = 14.483768	UDL spans: 2, 4, 6 (Lt L = 10.2), 7; –>Tdm lead @ 87.1
6	11.38	UDL spans: 1, 3, 5, 8; –>Tdm laad @ 53.9	UDL spans: 2, 4, 6, 7; –>Tdm lead @ 68.2
7	0.00	UDL spans: 2, 4, 6, 7; –>Tdm lead @ 72.3	UDL spans: 1, 3, 5, 8; –>Tdm laad @ 87.1
7	1.14	UDL spans: 2, 4, 6, 7 (Rt L = 10.2); –>Tdm lead @ 73.4	UDL spans: 1, 3, 5, 7 (Lt L = 1.1), 8; <–Trk rear [var s = 15.1594202898551] @ 84.5
7	2.28	UDL spans: 2, 4, 6, 7 (Rt L = 9.1); –>Tdm lead @ 74.5	UDL spans: 1, 3, 5, 7 (Lt L = 2.3), 8; <–Trk rear [var s = 14] @ 84.5
7	3.41	UDL spans: 2, 4, 6, 7 (Rt L = 8.0); –>Tdm laad @ 75.7	UDL spans: 1, 3, 5, 7 (Lt L = 3.4), 8; –>Trk lead [var s = 14] @ 99.7
7	4.55	UDL spans: 2, 4, 8, 7 (Rt L = 6.8); –>Tdm laad @ 76.8	UDL spans: 1, 3, 5, 7 (Lt L = 4.6), 8; –>Trk lead [var s = 14] @ 100.8
7	5.69	UDL spans: 2, 4, 6, 7 (Rt L = 5.7); –>Trk lead [var s = 14] @ 87.9	UDL spans: 1, 3, 5, 7 (Lt L = 5.7), 8; –>Trk lead [var s = 14] @ 101.9
7	6.83	UDL spans: 2, 4, 8, 7 (Rt L = 4.6); –>Trk lead [var s = 14] @ 89.1	UDL spans: 1, 3, 5, 7 (Lt L = 6.8), 8; –>Trk lead [var s = 14] @ 103.1
7	7.96	UDL spans: 2, 4, 6, 7 (Rt L = 3.4); –>Trk lead [var s = 14] @ 90.2	UDL spans: 1, 3, 5, 7 (Lt L = 8.0), 8; –>Tdm lead @ 76.2
7	9.10	UDL spans: 2, 4, 6, 7 (Rt L = 2.3); –>Trk lead [var s = 14] @ 91.4	UDL spans: 1, 3, 5, 7 (Lt L = 9.1), 8; –>Tdm lead @ 77.3
7	10.24	UDL spans: 2, 4, 6, 7 (Rt L = 1.1); –>Trk laad [var s = 14.463768115	UDL spans: 1, 3, 5, 7 (Lt L = 10.2), 8; –>Tdm lead @ 78.5
7	11.38	UDL spans: 2, 4, 6; –>Tdm laad @ 65.2	UDL spans: 1, 3, 5, 7, 8; –>Tdm lead @ 79.6
8	0.00	UDL spans: 1, 3, 5, 7, 8; –>Tdm lead @ 83.8	UDL spans: 2, 4, 8; –>Tdm lead @ 65.2
8	1.14	UDL spans: 1, 3, 5, 7, 8 (Rt L = 10.2); –>Tdm laad @ 84.8	UDL spans: 2, 4, 8, 8 (Lt L = 1.1); –>Trk lead [var s = 16.7826086956522] @ 94.8
8	2.28	UDL spans: 1, 3, 5, 7, 8 (Rt L = 9.1); –>Tdm lead @ 85.9	UDL spans: 2, 4, 6, 8 (Lt L = 2.3); –>Trk lead [var s = 17.9420289855072] @ 95.9
8	3.41	UDL spans: 1, 3, 5, 7, 8 (Rt L = 8.0); –>Tdm lead @ 87.0	UDL spans: 2, 4, 6, 8 (Lt L = 3.4); –>Trk lead [var s = 19.1014492753623] @ 97.0
8	4.55	UDL spans: 1, 3, 5, 7, 8 (Rt L = 8.8); –>Tdm lead @ 88.2	UDL spans: 2, 4, 6, 8 (Lt L = 4.6); –>Trk lead [var s = 20.2608695652174] @ 98.2
8	5.69	UDL spans: 1, 3, 5, 7, 8 (Rt L = 5.7); –>Trk lead [var s = 14] @ 99.3	UDL spans: 2, 4, 6, 8 (Lt L = 5.7); –>Trk lead [var s = 21.4202898550725] @ 99.3
8	6.83	UDL spans: 1, 3, 5, 7, 8 (Rt L = 4.8); –>Trk laad [var s = 14] @ 100.	UDL spans: 2, 4, 6, 8 (Lt L = 6.8); –>Trk lead [var s = 22.5797101449275] @ 100.4
8	7.96	UDL spans: 1, 3, 5, 7, 8 (Rt L = 3.4); –>Trk lead [var s = 14] @ 101.	UDL spans: 2, 4, 6, 8 (Lt L = 8.0); –>Tdm laad @ 87.6
8	9.10	UDL spans: 1, 3, 5, 7, 8 (Rt L = 2.3); –>Trk laad [var s = 14] @ 102.	UDL spans: 2, 4, 6, 8 (Lt L = 9.1); –>Tdm laad @ 88.7
8	10.24	UDL spans: 1, 3, 5, 7, 8 (Rt L = 1.1); –>Trk lead [var s = 14.463768	UDL spans: 2, 4, 6, 8 (Lt L = 10.2); –>Tdm lead @ 89.9
8	11.38	UDL spans: 1, 3, 5, 7; –>Tdm lead @ 76.8	UDL spans: 2, 4, 8, 8; –>Tdm laad @ 91.0

Msx LL Moments - Critical Case Desription

Span	X	(+)Moments	(-)Moments
1	0.00	N/A	N/A

1	1.14	UDL spans: 1, 3, 5, 7; ->Tdm lead @ 5.1	UDL spans: 2, 4, 8, 8; -->Tdm lead @ 18.1
1	2.28	UDL spans: 1, 3, 5, 7; -->Tdm lead @ 6.3	UDL spans: 2, 4, 6, 8; ->Tdm lead @ 18.1
1	3.41	UDL spans: 1, 3, 5, 7; ->Tdm lead @ 7.4	UDL spans: 2, 4, 6, 8; ->Tdm lead @ 18.1
1	4.55	UDL spans: 1, 3, 5, 7; ->Trk lead [var s = 22.5797101449275] @ 41	UDL spans: 2, 4, 8, 8; -->Tdm lead @ 18.1
1	5.69	UDL spans: 1, 3, 5, 7; ->Trk lead [var s = 21.4202898550725] @ 41	UDL spans: 2, 4, 8, 8; ->Tdm lead @ 18.1
1	6.83	UDL spans: 1, 3, 5, 7; -->Trk lead [var s = 20.2608695652174] @ 41	UDL spans: 2, 4, 6, 8; -->Tdm laad @ 18.1
1	7.96	UDL spans: 1, 3, 5, 7; -->Trk laad [var s = 19.1014492753623] @ 41	UDL spans: 2, 4, 6, 8; ->Tdm lead @ 18.1
1	9.10	UDL spans: 1 (Rt L = 8.4), 3, 5, 7; -->Trk lead [var s = 17.942028985	UDL spans: 1 (Lt L = 2.9), 2, 4, 6, 8; ->Dbl Tdm lead [Tnd spa = 26] @ 18.2
1	10.24	UDL spans: 1 (Rt L = 2.7), 3, 5, 7; ->Trk laad [var s = 16.782608695	UDL spans: 1 (Lt L = 8.7), 2, 4, 6, 8; ->Trk lead [var s = 14] @ 31.2
1	11.38	UDL spans: 3, 5, 7; ->Tdm laad @ 29.8	UDL spans: 1, 2, 4, 6, 8; <--Trk rear [var s = 14] @ 18.4
2	0.00	UDL spans: 3, 5, 7; ->Tdm lead @ 29.8	UDL spans: 1, 2, 4, 6, 8; <--Trk rear [var s = 14] @ 18.4
2	1.14	UDL spans: 2 (Lt L = 3.2), 3, 5, 7; ->Trk laad [var s = 14.463768115	UDL spans: 1, 2 (Rt L = 8.2), 4, 6, 8; -->Tdm lead @ 8.2
2	2.28	UDL spans: 2, 3; ->Trk lead [var s = 14] @ 27.7	UDL spans: 1, 4, 5, 6, 7, 8; -->Tdm lead @ 8.2
2	3.41	UDL spans: 2, 4, 6, 8; ->Trk lead [var s = 23.7391304347626] @ 52	UDL spans: 1, 3, 5, 7; -->Tdm laad @ 8.2
2	4.55	UDL spans: 2, 4, 6, 8; ->Trk laad [var s = 22.5797101449275] @ 52	UDL spans: 1, 3, 5, 7; -->Trk lead [var s = 20.4927536231884] @ 41.1
2	5.69	UDL spans: 2, 4, 6, 8; ->Trk lead [var s = 21.4202898550725] @ 52	UDL spans: 1, 3, 5, 7; ->Trk lead [var s = 20.4927536231884] @ 41.1
2	6.83	UDL spans: 2, 4, 6, 8; ->Trk laad [var s = 20.2608695652174] @ 52	UDL spans: 1, 3, 5, 7; <--Trk rear [var s = 20.4927536231884] @ 27.1
2	7.96	UDL spans: 2, 4, 6, 8; ->Trk lead [var s = 19.1014492753623] @ 52	UDL spans: 1, 3, 5, 7; ->Tdm lead @ 29.4
2	9.10	UDL spans: 1, 2 (Rt L = 8.9), 4, 6, 8; <--Trk rear [var s = 17.9420289	UDL spans: 2 (Lt L = 2.4), 3, 5, 7; ->Tdm laad @ 29.4
2	10.24	UDL spans: 1, 2 (Rt L = 2.9), 4, 8, 8; <--Trk rear [var s = 16.7826086	UDL spans: 2 (Lt L = 8.5), 3, 5, 7; ->Tdm lead @ 29.4
2	11.38	UDL spans: 1, 4, 6, 8; <--Trk rear [var s = 30] @ 37.6	UDL spans: 2, 3, 5, 7; <--Trk rear [var s = 14] @ 29.8
3	0.00	UDL spans: 1, 4, 6, 8; <--Trk rear [var s = 30] @ 37.6	UDL spans: 2, 3, 5, 7; <--Trk rear [var s = 14] @ 29.8
3	1.14	UDL spans: 1, 3 (Lt L = 2.9), 4, 6, 8; -->Trk lead [var s = 17.2463768	UDL spans: 2, 3 (Rt L = 8.4), 5, 7; ->Tdm lead @ 19.8
3	2.28	UDL spans: 1, 3 (Lt L = 9.1), 4, 8, 8; -->Trk lead [var s = 18.4057971	UDL spans: 2, 3 (Rt L = 2.3), 5, 7; -->Tdm lead @ 19.8
3	3.41	UDL spans: 1, 3, 5, 7; ->Trk laad [var s = 19.5652173913043] @ 4(	UDL spans: 2, 4, 8, 8; -->Tdm lead @ 19.8
3	4.55	UDL spans: 1, 3, 5, 7; -->Trk lead [var s = 20.7246376811594] @ 41	UDL spans: 2, 4, 6, 8; -->Trk lead [var s = 20.0289855072464] @ 52.5
3	5.69	UDL spans: 1, 3, 5, 7; ->Trk lead [var s = 21.8840579710145] @ 42	UDL spans: 2, 4, 6, 8; -->Trk lead [var s = 20.0289855072464] @ 52.5
3	6.83	UDL spans: 1, 3, 5, 7; ->Trk lead [var s = 20.2808695652174] @ 6	UDL spans: 2, 4, 6, 8; <--Trk rear [var s = 20.0289855072464] @ 38.4
3	7.96	UDL spans: 1, 3, 5, 7; -->Trk lead [var s = 19.1014492753623] @ 6	UDL spans: 2, 4, 6, 8; ->Tdm lead @ 40.8
3	9.10	UDL spans: 2, 3 (Rt L = 9.0), 5, 7; <--Trk rear [var s = 17.942028985	UDL spans: 1, 3 (Lt L = 2.4), 4, 6, 8; ->Tdm lead @ 40.8
3	10.24	UDL spans: 2, 3 (Rt L = 2.9), 5, 7; <--Trk rear [var s = 16.782608695	UDL spans: 1, 3 (Lt L = 8.4), 4, 6, 8; -->Tdm lead @ 40.8
3	11.38	UDL spans: 2, 5, 7; <-Trk rear [var s = 30] @ 49.2	UDL spans: 1, 3, 4, 6, 8; -->Trk lead [var s = 14] @ 55.1
4	0.00	UDL spans: 2, 5, 7; <-Trk rear [var s = 30] @ 49.2	UDL spans: 1, 3, 4, 6, 8; -->Trk laad [var s = 14] @ 55.1
4	1.14	UDL spans: 2, 4 (Lt L = 2.9), 5, 7; -->Trk laad [var s = 16.782608695	UDL spans: 1, 3, 4 (Rt L = 8.4), 8, 8; ->Tdm lead @ 31.4
4	2.28	UDL spans: 2, 4 (Lt L = 9.0), 5, 7; ->Trk laad [var s = 17.942028985	UDL spans: 1, 3, 4 (Rt L = 2.4), 6, 8; -->Tdm laad @ 31.4
4	3.41	UDL spans: 2, 4, 6, 8; -->Trk lead [var s = 19.1014492753623] @ 51	UDL spans: 1, 3, 5, 7; -->Tdm lead @ 31.4
4	4.55	UDL spans: 2, 4, 8, 8; -->Trk lead [var s = 20.2608695652174] @ 52	UDL spans: 1, 3, 5, 7; -->Trk lead [var s = 20.0289855072464] @ 63.8
4	5.69	UDL spans: 2, 4, 8, 8; -->Trk lead [var s = 21.4202898550725] @ 53	UDL spans: 1, 3, 5, 7; -->Trk lead [var s = 20.0289855072484] @ 63.8
4	6.83	UDL spans: 2, 4, 8, 8; ->Trk lead [var s = 20.2608695652174] @ 75	UDL spans: 1, 3, 5, 7; <--Trk rear [var s = 20.0289855072464] @ 49.8
4	7.96	UDL spans: 2, 4, 6, 8; ->Trk laad [var s = 19.1014492753623] @ 75	UDL spans: 1, 3, 5, 7; ->Tdm lead @ 52.2
4	9.10	UDL spans: 1, 3, 4 (Rt L = 9.0), 6, 8; <--Trk rear [var s = 17.9420289	UDL spans: 2, 4 (Lt L = 2.4), 5, 7; -->Tdm lead @ 52.2
4	10.24	UDL spans: 1, 3, 4 (Rt L = 2.9), 6, 8; <--Trk rear [var s = 16.7826086	UDL spans: 2, 4 (Lt L = 8.4), 5, 7; ->Tdm lead @ 52.2
4	11.38	UDL spans: 1, 3, 6, 8; <--Trk rear [var s = 30] @ 60.6	UDL spans: 2, 4, 5, 7; -->Trk lead [var s = 14] @ 66.4
5	0.00	UDL spans: 1, 3, 6, 8; <--Trk rear [var s = 30] @ 60.6	UDL spans: 2, 4, 5, 7; -->Trk lead [var s = 14] @ 66.4
5	1.14	UDL spans: 1, 3, 5 (Lt L = 2.9), 6, 8; ->Trk lead [var s = 16.7826086	UDL spans: 2, 4, 5 (Rt L = 8.4), 7; ->Tdm laad @ 42.8
5	2.28	UDL spans: 1, 3, 5 (Lt L = 9.0), 6, 8; -->Trk laad [var s = 17.9420289	UDL spans: 2, 4, 5 (Rt L = 2.4), 7; ->Tdm lead @ 42.8
5	3.41	UDL spans: 1, 3, 5, 7; -->Trk lead [var s = 19.1014492753623] @ 62	UDL spans: 2, 4, 8, 8; ->Tdm lead @ 42.8
5	4.55	UDL spans: 1, 3, 5, 7; -->Trk lead [var s = 20.2608695652174] @ 64	UDL spans: 2, 4, 6, 8; ->Trk lead [var s = 20.0289855072464] @ 75.2
5	5.69	UDL spans: 1, 3, 5, 7; -->Trk lead [var s = 21.4202898550725] @ 86	UDL spans: 2, 4, 6, 8; <-Trk rear [var s = 20.0289855072464] @ 61.2
5	6.83	UDL spans: 1, 3, 5, 7; -->Trk lead [var s = 20.2608695652174] @ 86	UDL spans: 2, 4, 6, 8; <-Trk rear [var s = 20.0289855072464] @ 61.2
5	7.96	UDL spans: 1, 3, 5, 7; ->Trk lead [var s = 19.1014492753823] @ 86	UDL spans: 2, 4, 6, 8; -->Tdm laad @ 83.8
5	9.10	UDL spans: 2, 4, 5 (Rt L = 9.0), 7; <--Trk rear [var s = 17.942028985	UDL spans: 1, 3, 5 (Lt L = 2.4), 6, 8; ->Tdm lead @ 63.6
5	10.24	UDL spans: 2, 4, 5 (Rt L = 2.9), 7; <-Trk rear [var s = 16.782608695	UDL spans: 1, 3, 5 (Lt L = 8.4), 6, 8; -->Tdm lead @ 83.6
5	11.38	UDL spans: 2, 4, 7; ->Trk lead [var s = 30] @ 85.8	UDL spans: 1, 3, 5, 6, 8; <-Trk rear [var s = 14] @ 63.9
6	0.00	UDL spans: 2, 4, 7; ->Trk lead [var s = 30] @ 85.8	UDL spans: 1, 3, 5, 6, 8; <--Trk rear [var s = 14] @ 63.9
6	1.14	UDL spans: 2, 4, 8 (Lt L = 2.9), 7; -->Trk laad [var s = 16.782608695	UDL spans: 1, 3, 5, 6 (Rt L = 8.4), 8; ->Tdm lead @ 54.2
6	2.28	UDL spans: 2, 4, 6 (Lt L = 9.0), 7; ->Trk lead [var s = 17.942028985	UDL spans: 1, 3, 5, 6 (Rt L = 2.4), 8; ->Tdm lead @ 54.2
6	3.41	UDL spans: 2, 4, 6, 8; ->Trk lead [var s = 19.1014492753623] @ 74	UDL spans: 1, 3, 5, 7; ->Tdm laad @ 54.2
6	4.55	UDL spans: 2, 4, 8, 8; ->Trk lead [var s = 20.2608695652174] @ 75	UDL spans: 1, 3, 5, 7; ->Trk lead [var s = 20.0289855072464] @ 88.6
6	5.69	UDL spans: 2, 4, 6, 8; ->Trk lead [var s = 21.8840579710145] @ 96	UDL spans: 1, 3, 5, 7; <-Trk rear [var s = 20.0289855072464] @ 72.6
6	6.83	UDL spans: 2, 4, 6, 8; -->Trk lead [var s = 20.7246376811594] @ 96	UDL spans: 1, 3, 5, 7; <-Trk rear [var s = 20.0289855072464] @ 72.6
6	7.96	UDL spans: 2, 4, 6, 8; -->Trk lead [var s = 19.5652173913043] @ 96	UDL spans: 1, 3, 5, 7; -->Tdm laad @ 75.2
6	9.10	UDL spans: 1, 3, 5, 6 (Rt L = 9.1), 8; <-Trk rear [var s = 18.4057971	UDL spans: 2, 4, 6 (Lt L = 2.3), 7; ->Tdm laad @ 75.2
6	10.24	UDL spans: 1, 3, 5, 6 (Rt L = 3.0), 8; <-Trk rear [var s = 17.2463766	UDL spans: 2, 4, 6 (Lt L = 8.4), 7; -->Tdm lead @ 75.2
6	11.38	UDL spans: 1, 3, 5, 8; -->Trk laad [var s = 30] @ 97.4	UDL spans: 2, 4, 6, 7; ->Trk lead [var s = 14] @ 89.2
7	0.00	UDL spans: 1, 3, 5, 8; -->Trk lead [var s = 30] @ 97.4	UDL spans: 2, 4, 6, 7; -->Trk laad [var s = 14] @ 89.2
7	1.14	UDL spans: 1, 3, 5, 7 (Lt L = 2.9), 8; -->Trk lead [var s = 16.7826086	UDL spans: 2, 4, 6, 7 (Rt L = 8.5); ->Tdm lead @ 65.6
7	2.28	UDL spans: 1, 3, 5, 7 (Lt L = 8.9), 8; -->Trk lead [var s = 17.9420289	UDL spans: 2, 4, 6, 7 (Rt L = 2.4); ->Tdm laad @ 65.6
7	3.41	UDL spans: 1, 3, 5, 7; -->Trk laad [var s = 19.1014492753623] @ 85	UDL spans: 2, 4, 6, 8; -->Tdm laad @ 65.6
7	4.55	UDL spans: 1, 3, 5, 7; -->Trk lead [var s = 20.2608695652174] @ 86	UDL spans: 2, 4, 6, 8; -->Trk lead [var s = 20.4927536231884] @ 98.4
7	5.69	UDL spans: 1, 3, 5, 7; -->Trk lead [var s = 21.4202898550725] @ 87	UDL spans: 2, 4, 6, 8; <-Trk rear [var s = 20.4927536231884] @ 84.4

VQ-093
Rutland, VT
Steel Truss: Ripley Road over Otter Creek

7	6.83	UDL spans: 1, 3, 5, 7; -->Trk lead [var s = 22.5797101449275] @ 85	UDL spans: 2, 4, 6, 8; <--Trk rear [var s = 20.4927536231884] @ 84.4
7	7.96	UDL spans: 1, 3, 5, 7; -->Trk lead [var s = 23.7391304347826] @ 90	UDL spans: 2, 4, 6, 8; -->Tdm lead @ 86.8
7	9.10	UDL spans: 1, 3, 5, 7; -->Trk lead [var s = 14] @ 91.4	UDL spans: 2, 4, 6, 8; -->Tdm lead @ 86.8
7	10.24	UDL spans: 2, 4, 6, 7 (Rt L = 3.2); -->Trk laad [var s = 14.463768115	UDL spans: 1, 3, 5, 7 (Lt L = 8.2), 8; -->Tdm lead @ 86.8
7	11.38	UDL spans: 2, 4, 6; -->Tdm lead @ 65.2	UDL spans: 1, 3, 5, 7, 8; -->Trk lead [var s = 14] @ 100.6
8	0.00	UDL spans: 2, 4, 8; -->Tdm lead @ 65.2	UDL spans: 1, 3, 5, 7, 8; -->Trk lead [var s = 14] @ 100.6
8	1.14	UDL spans: 2, 4, 8, 8 (Lt L = 2.7); -->Trk laad [var s = 18.782608695	UDL spans: 1, 3, 5, 7, 8 (Rt L = 8.7); <--Trk rear [var s = 14] @ 87.8
8	2.28	UDL spans: 2, 4, 8, 8 (Lt L = 8.4); -->Trk laad [var s = 17.942028985	UDL spans: 1, 3, 5, 7, 8 (Rt L = 2.9); -->Tdm laad @ 76.9
8	3.41	UDL spans: 2, 4, 6, 8; -->Trk laad [var s = 19.1014492753623] @ 97	UDL spans: 1, 3, 5, 7; -->Tdm lead @ 76.9
8	4.55	UDL spans: 2, 4, 6, 8; -->Trk lead [var s = 20.2608695652174] @ 98	UDL spans: 1, 3, 5, 7; -->Tdm lead @ 76.9
8	5.69	UDL spans: 2, 4, 6, 8; -->Trk lead [var s = 21.4202898550725] @ 99	UDL spans: 1, 3, 5, 7; -->Tdm lead @ 78.9
8	6.83	UDL spans: 2, 4, 6, 8; -->Trk lead [var s = 22.5797101449275] @ 10	UDL spans: 1, 3, 5, 7; -->Tdm lead @ 76.9
8	7.96	UDL spans: 2, 4, 6, 8; -->Tdm laad @ 87.8	UDL spans: 1, 3, 5, 7; -->Tdm lead @ 78.9
8	9.10	UDL spans: 2, 4, 8, 8; -->Tdm lead @ 88.7	UDL spans: 1, 3, 5, 7; -->Tdm laad @ 76.9
8	10.24	UDL spans: 2, 4, 6, 8; -->Tdm lead @ 89.9	UDL spans: 1, 3, 5, 7; -->Tdm lead @ 76.9
8	11.38	N/A	N/A

VO-093
Rutland, VT
Steel Truss: Ripley Road over Otter Creek

Exterior Strip
Positive LL Moments

1 of 8

Analysis ID = 4

Loading Type: Live Load		Units				
Modulus of Elasticity (E)		Force	Length			
		All input parameters must be in consistent units. Output values are in the same units as input.	Units used to specify span L are considered master units. Master units are used for all input and output data except parameters on the right are in sub units. Specify number of sub units per one master unit in the Master/Sub field (e.g. 1000 for m/mm or 12 for ft/in).		Parameter	Master/Sub
					I (sub⁴)	1
					E (force/sub²)	1
					Settl. (sub)	1
Eo =	1	Force Unit Name: kip	Master Length Unit Name: feet		Defl. (sub)	1
$E = Eo \times 10^x$						
X =	1	Note: Force and master length unit names above have no effect on analysis and are for information only				

Supports	Supp 1	Supp 2	Supp 3	Supp 4	Supp 5	Supp 6	Supp 7	Supp 8	Supp 9	Supp 10
Type	pin	pin	pin	pin	pin	pin	pin	pin	pin	

Spans		Span 1	Span 2	Span 3	Span 4	Span 5	Span 6	Span 7	Span 8	Span 9
Segment 1	L	11.375	11.375	11.375	11.375	11.375	11.375	11.375	11.375	
	I	1	1	1	1	1	1	1	1	
Segment 2	L									
	I									
Segment 3	L									
	I									
Segment 4	L									
	I									
Segment 5	L									
	I									
Segment 6	L									
	I									
Segment 7	L									
	I									
Segment 8	L									
	I									
Segment 9	L									
	I									
Segment 10	L									
	I									
Segment 11	L									
	I									
Segment 12	L									
	I									
Segment 13	L									
	I									
	Span L =	11.375	11.375	11.375	11.375	11.375	11.375	11.375	11.375	0

Live Load --> Lane (UDL) combined with Truck or Tandem

Use lane combined with truck or tandem, whichever produce maximum adverse force effect

Lane Loading:

UDL = 0.062

Truck Loading:

Lead axle P1 = 4
axle P2 = 16
axle P3 = 16
P1/P2 Spa = 14
P2/P3 Spa = vary 14 to 30

Tendem Loading:

axle P = 12.5
axle Spa = 4

VQ-093
Rutland, VT
Stael Truss: Ripley Road over Qtter Craek

In addition to lane combined with single truck/tandam, calculata moments in (-)M ragions and max reactions at intermediate supports due to lane combined with two trucks placed in critical locations in adjacent to intarmediate support spans. Do the sama for two tandems. Tha following applies:

2-Trucks:

Constant P2/P3 Spa =	14
Min spa betwaan 2nd trk lead/1st trk raar axles =	50
[Lana+Doubla Trk] Reduct Factor (excapt raact) =	0.9
[Lane+DoublaTrk] Reaction Reduct Factor =	0.9

2-Tandams:

Axle P =	12.5
Min spa betwaan tandems =	26
Max spa betwaan tandems =	40
[Lane+Double Tnd] Reduct Factor (except react) =	1
[Lane+DoubleTnd] Raaction Raduct Factor =	1

Load Multipliars:

Lane m =	1
Truck/Tandem m =	1.33

Specified Option: Naglact axles that reduce advarse force affects

Note:
Liva Load is besed on HL-93 (AASHTO LRFD) loading

Max LL Vertical Reactions & Corresponding Rotations

	----Max Reactions----		----Min Reactions----	
Support	max R	Rotation	mln R	Rotation
1	26.35	-10.8122	-2.25	4.8505
2	32.61	2.1869	-3.62	2.5994
3	32.05	0.0053	-8.33	-0.3538
4	32.05	0.0029	-5.85	-0.0013
5	32.04	0.0000	-5.83	0.0177
8	32.05	-0.0029	-5.85	0.0013
7	32.05	-0.0053	-6.33	0.3538
8	32.61	-2.5339	-3.62	-2.5994
9	26.35	10.8122	-2.25	-4.8505

Max LL Rotations & Corresponding Vertical Reactions

	----Pos Rotations----		----Nag Rotations----	
Support	(+)Rot	React	(-)Rot	React
1	4.8608	-2.25	-18.1408	16.14
2	11.2816	24.38	-9.7216	21.24
3	9.2532	22.46	-9.1878	12.88
4	9.1233	22.24	-9.1119	22.22
5	9.1116	22.22	-9.1116	22.22
6	9.1119	22.22	-9.1233	22.24
7	9.1878	12.68	-9.2532	22.46
8	9.7216	21.24	-11.2816	24.38
9	18.1408	16.14	-4.8608	-2.25

Max LL Shears & Corresponding Moments

		----Pos Shears---		----Neg Shears----		
Span	X	(+)V	M	(-)V	M	
1	0.00	26.3	0.0	-2.3	0.0	*supp 1*
1	1.14	22.3	25.3	-4.4	19.2	*pt 0.1*
1	2.28	18.4	41.8	-7.1	32.5	*pt 0.2*
1	3.41	14.7	50.1	-9.5	40.5	*pt 0.3*
1	4.55	11.4	51.9	-11.8	43.9	*pt 0.4*
1	5.69	9.0	51.3	-13.8	43.4	*pt 0.5*
1	6.83	6.8	46.5	-17.0	45.5	*pt 0.6*
1	7.96	4.8	38.4	-20.6	36.0	*pt 0.7*
1	9.10	3.1	28.0	-23.9	20.8	*pt 0.8*
1	10.24	1.6	16.5	-26.9	1.6	*pt 0.9*
1	11.38	0.6	6.9	-29.5	-20.0	*supp 2*
2	0.00	28.1	-15.8	-3.0	6.9	*supp 2*
2	1.14	24.8	5.4	-3.9	15.6	*pt 0.1*
2	2.28	21.3	22.5	-5.9	24.9	*pt 0.2*
2	3.41	17.5	34.2	-8.0	31.9	*pt 0.3*

VQ-093
Rutland, VT
Steel Truss: Ripley Road over Otter Creek

2	4.55	14.4	34.8	-10.1	36.3	*pt 0.4*
2	5.69	12.4	36.1	-12.1	37.8	*pt 0.5*
2	6.83	10.4	34.7	-14.2	39.5	*pt 0.6*
2	7.96	8.4	30.8	-17.9	33.3	*pt 0.7*
2	9.10	6.3	24.6	-21.6	21.1	*pt 0.8*
2	10.24	4.5	16.7	-25.1	3.8	*pt 0.9*
2	11.38	3.8	9.3	-28.3	-17.1	*supp 3*
3	0.00	28.2	-16.8	-3.1	7.5	*supp 3*
3	1.14	25.0	4.1	-4.0	16.3	*pt 0.1*
3	2.28	21.5	21.3	-5.9	24.6	*pt 0.2*
3	3.41	17.7	33.2	-7.9	31.4	*pt 0.3*
3	4.55	14.1	39.9	-10.0	35.9	*pt 0.4*
3	5.69	12.0	37.4	-12.0	37.5	*pt 0.5*
3	6.83	10.0	35.7	-14.3	40.2	*pt 0.6*
3	7.96	7.9	31.3	-17.8	33.1	*pt 0.7*
3	9.10	5.9	24.5	-21.5	21.1	*pt 0.8*
3	10.24	4.0	16.2	-25.0	4.0	*pt 0.9*
3	11.38	3.1	7.6	-28.2	-16.9	*supp 4*
4	0.00	28.2	-16.9	-3.1	7.5	*supp 4*
4	1.14	25.0	4.0	-4.0	16.2	*pt 0.1*
4	2.28	21.5	21.1	-5.9	24.5	*pt 0.2*
4	3.41	17.8	33.1	-7.9	31.3	*pt 0.3*
4	4.55	14.1	39.9	-9.9	35.8	*pt 0.4*
4	5.69	12.0	37.4	-12.0	37.4	*pt 0.5*
4	6.83	9.9	35.8	-14.1	39.9	*pt 0.6*
4	7.96	7.9	31.3	-17.8	33.1	*pt 0.7*
4	9.10	5.9	24.5	-21.5	21.1	*pt 0.8*
4	10.24	4.0	16.2	-25.0	4.0	*pt 0.9*
4	11.38	3.1	7.5	-28.2	-16.9	*supp 5*
5	0.00	28.2	-16.9	-3.1	7.5	*supp 5*
5	1.14	25.0	4.0	-4.0	16.2	*pt 0.1*
5	2.28	21.5	21.1	-5.9	24.5	*pt 0.2*
5	3.41	17.8	33.1	-7.9	31.3	*pt 0.3*
5	4.55	14.1	39.9	-9.9	35.8	*pt 0.4*
5	5.69	12.0	37.4	-12.0	37.4	*pt 0.5*
5	6.83	9.9	35.8	-14.1	39.9	*pt 0.6*
5	7.96	7.9	31.3	-17.8	33.1	*pt 0.7*
5	9.10	5.9	24.5	-21.5	21.1	*pt 0.8*
5	10.24	4.0	16.2	-25.0	4.0	*pt 0.9*
5	11.38	3.1	7.5	-28.2	-16.9	*supp 8*
6	0.00	28.2	-16.9	-3.1	7.6	*supp 6*
6	1.14	25.0	4.0	-4.0	16.2	*pt 0.1*
6	2.28	21.5	21.1	-5.9	24.5	*pt 0.2*
6	3.41	17.8	33.1	-7.9	31.3	*pt 0.3*
6	4.55	14.3	40.2	-10.0	35.7	*pt 0.4*
6	5.69	12.0	37.5	-12.0	37.4	*pt 0.5*
6	6.83	10.0	35.9	-14.1	39.9	*pt 0.6*
6	7.96	7.9	31.4	-17.7	33.2	*pt 0.7*
6	9.10	5.9	24.6	-21.5	21.3	*pt 0.8*
6	10.24	4.0	16.3	-25.0	4.1	*pt 0.9*
6	11.38	3.1	7.5	-28.2	-16.8	*supp 7*
7	0.00	28.3	-17.1	-3.8	9.3	*supp 7*
7	1.14	25.1	3.8	-4.5	16.7	*pt 0.1*
7	2.28	21.6	21.1	-6.3	24.8	*pt 0.2*
7	3.41	17.9	33.3	-8.4	30.8	*pt 0.3*
7	4.55	14.2	39.5	-10.4	34.7	*pt 0.4*
7	5.69	12.1	37.8	-12.4	36.1	*pt 0.5*
7	6.83	10.1	36.3	-14.4	34.8	*pt 0.6*
7	7.96	8.0	31.9	-17.5	34.2	*pt 0.7*
7	9.10	5.9	24.9	-21.3	22.5	*pt 0.8*
7	10.24	3.9	15.6	-24.8	5.4	*pt 0.9*
7	11.38	3.0	6.9	-28.1	-15.8	*supp 8*
8	0.00	29.5	-20.0	-0.6	6.9	*supp 8*
8	1.14	26.9	1.6	-1.6	16.5	*pt 0.1*
8	2.28	23.9	20.8	-3.1	28.0	*pt 0.2*
8	3.41	20.8	36.0	-4.8	38.4	*pt 0.3*
8	4.55	17.0	45.5	-6.8	46.5	*pt 0.4*
8	5.69	13.8	43.4	-9.0	51.3	*pt 0.5*
8	8.83	11.8	43.9	-11.4	51.9	*pt 0.6*
8	7.96	9.5	40.5	-14.7	50.1	*pt 0.7*
8	9.10	7.1	32.5	-18.4	41.8	*pt 0.8*

VQ-093
Rutland, VT
Steel Truss: Ripley Road over Otter Creek

8	10.24	4.4	19.2	-22.3	25.3	*pt 0.9*
8	11.38	2.3	0.0	-26.3	0.0	*supp 9*

Max LL Moments & Corresponding Shears

		----Pos Moments----		----Neg Moments----		
Span	X	(+)M	V	(-)M	V	
1	0.00	0.0	0.0	0.0	0.0	*supp 1*
1	1.14	25.4	22.3	-2.6	-2.3	*pt 0.1*
1	2.28	41.9	18.4	-5.1	-2.3	*pt 0.2*
1	3.41	50.3	14.6	-7.7	-2.3	*pt 0.3*
1	4.55	52.2	11.3	-10.3	-2.3	*pt 0.4*
1	5.69	51.7	-12.4	-12.8	-2.3	*pt 0.5*
1	6.83	46.9	-14.6	-15.4	-2.3	*pt 0.6*
1	7.96	38.8	-16.7	-17.9	-2.3	*pt 0.7*
1	9.10	28.2	-18.4	-20.5	-2.3	*pt 0.8*
1	10.24	16.6	-19.8	-24.6	-9.2	*pt 0.9*
1	11.38	6.9	0.6	-36.8	-11.9	*supp 2*
2	0.00	6.9	-3.0	-36.8	10.3	*supp 2*
2	1.14	15.6	17.4	-30.0	4.0	*pt 0.1*
2	2.28	25.0	17.2	-25.6	3.8	*pt 0.2*
2	3.41	35.3	16.1	-21.3	3.8	*pt 0.3*
2	4.55	41.9	13.7	-17.8	0.5	*pt 0.4*
2	5.69	44.5	11.1	-17.2	0.5	*pt 0.5*
2	6.83	42.9	-12.7	-16.6	0.5	*pt 0.6*
2	7.96	37.3	-15.2	-17.2	-3.0	*pt 0.7*
2	9.10	28.4	-16.7	-20.6	-3.0	*pt 0.8*
2	10.24	18.2	-18.5	-24.1	-3.2	*pt 0.9*
2	11.38	12.0	3.3	-32.7	-10.2	*supp 3*
3	0.00	12.0	-3.0	-32.7	9.9	*supp 3*
3	1.14	19.2	18.4	-24.6	3.3	*pt 0.1*
3	2.28	29.4	16.6	-20.9	3.2	*pt 0.2*
3	3.41	38.0	14.9	-17.4	3.1	*pt 0.3*
3	4.55	43.2	12.5	-15.6	0.0	*pt 0.4*
3	5.69	44.5	-11.4	-15.5	0.0	*pt 0.5*
3	6.83	42.6	-12.6	-15.5	0.0	*pt 0.6*
3	7.96	37.2	-15.1	-17.2	-3.0	*pt 0.7*
3	9.10	28.4	-16.7	-20.6	-3.1	*pt 0.8*
3	10.24	18.1	-18.6	-24.2	-3.3	*pt 0.9*
3	11.38	11.1	2.9	-32.4	-9.8	*supp 4*
4	0.00	11.1	-2.9	-32.4	10.0	*supp 4*
4	1.14	18.1	18.6	-24.3	3.3	*pt 0.1*
4	2.28	28.5	16.7	-20.6	3.1	*pt 0.2*
4	3.41	37.2	15.1	-17.2	3.0	*pt 0.3*
4	4.55	42.8	12.6	-15.4	0.0	*pt 0.4*
4	5.69	44.1	-11.3	-15.4	0.0	*pt 0.5*
4	6.83	42.6	-12.6	-15.4	0.0	*pt 0.6*
4	7.96	37.2	-15.1	-17.2	-3.0	*pt 0.7*
4	9.10	28.4	-16.7	-20.6	-3.1	*pt 0.8*
4	10.24	18.1	-18.6	-24.2	-3.3	*pt 0.9*
4	11.38	11.1	2.9	-32.4	-9.8	*supp 5*
5	0.00	11.1	-2.9	-32.4	10.0	*supp 5*
5	1.14	18.1	18.6	-24.2	3.3	*pt 0.1*
5	2.28	28.4	16.7	-20.6	3.1	*pt 0.2*
5	3.41	37.2	15.1	-17.2	3.0	*pt 0.3*
5	4.55	42.6	12.6	-15.4	0.0	*pt 0.4*
5	5.69	44.1	11.3	-15.4	0.0	*pt 0.5*
5	6.83	42.6	-12.6	-15.4	0.0	*pt 0.6*
5	7.96	37.2	-15.1	-17.2	-3.0	*pt 0.7*
5	9.10	28.5	-16.7	-20.6	-3.1	*pt 0.8*
5	10.24	18.1	-18.6	-24.3	-3.3	*pt 0.9*
5	11.38	11.1	2.9	-32.4	-10.0	*supp 6*
6	0.00	11.1	-2.9	-32.4	9.8	*supp 8*
6	1.14	18.1	18.6	-24.2	3.3	*pt 0.1*
6	2.28	28.4	16.7	-20.6	3.1	*pt 0.2*
6	3.41	37.2	15.1	-17.2	3.0	*pt 0.3*
6	4.55	42.6	12.6	-15.5	0.0	*pt 0.4*
6	5.69	44.5	11.4	-15.5	0.0	*pt 0.5*
6	6.83	43.2	-12.5	-15.6	0.0	*pt 0.6*
6	7.96	38.0	-14.9	-17.4	-3.1	*pt 0.7*
6	9.10	29.4	-16.6	-20.9	-3.2	*pt 0.8*
6	10.24	19.2	-18.4	-24.6	-3.3	*pt 0.9*

6	11.38	12.0	3.0	-32.7	-9.9	*supp 7*
7	0.00	12.0	-3.3	-32.7	10.2	*supp 7*
7	1.14	18.2	18.5	-24.1	3.2	*pt 0.1*
7	2.28	28.4	16.7	-20.6	3.0	*pt 0.2*
7	3.41	37.3	15.2	-17.2	3.0	*pt 0.3*
7	4.55	42.9	12.7	-16.6	-0.5	*pt 0.4*
7	5.69	44.5	-11.1	-17.2	-0.5	*pt 0.5*
7	6.83	41.9	-13.7	-17.8	-0.5	*pt 0.6*
7	7.98	35.3	-16.1	-21.3	-3.8	*pt 0.7*
7	9.10	25.0	-17.9	-25.6	-3.8	*pt 0.8*
7	10.24	15.6	-17.4	-30.0	-4.0	*pt 0.9*
7	11.38	6.9	3.0	-36.8	-10.3	*supp 8*
8	0.00	6.9	-0.6	-36.8	11.9	*supp 8*
8	1.14	16.6	19.8	-24.7	9.2	*pt 0.1*
8	2.28	28.2	18.4	-20.5	2.3	*pt 0.2*
8	3.41	38.8	16.7	-17.9	2.3	*pt 0.3*
8	4.55	46.9	14.6	-15.4	2.3	*pt 0.4*
8	5.69	51.7	12.4	-12.8	2.3	*pt 0.5*
8	6.83	52.2	-11.3	-10.3	2.3	*pt 0.6*
8	7.96	50.3	-14.6	-7.7	2.3	*pt 0.7*
8	9.10	41.9	-18.4	-5.1	2.3	*pt 0.8*
8	10.24	25.4	-22.3	-2.6	2.3	*pt 0.9*
8	11.38	0.0	0.0	0.0	0.0	*supp 9*

Max LL Reactions - Critical Case Desription

Support	(+)Reactions	(-)Reactions
1	*UDL spans: 1, 3, 5, 7; -->Tdm lead @ 4.0*	*UDL spans: 2, 4, 6, 8; -->Tdm lead @ 18.4*
2	*UDL spans: 1, 2, 4, 6, 8; -->Tdm lead @ 12.7*	*UDL spans: 3, 5, 7; -->Tdm lead @ 29.8*
3	*UDL spans: 2, 3, 5, 7; -->Tdm lead @ 24.8*	*UDL spans: 1, 4, 6, 8; <--Trk rear [var s = 30] @ 37.6*
4	*UDL spans: 1, 3, 4, 6, 8; -->Tdm laad @ 36.1*	*UDL spans: 2, 5, 7; <--Trk rear [var s = 30] @ 49.2*
5	*UDL spans: 2, 4, 5, 7; -->Tdm lead @ 47.5*	*UDL spans: 1, 3, 6, 8; <--Trk rear [var s = 30] @ 60.6*
6	*UDL spans: 1, 3, 5, 6, 8; -->Tdm laad @ 58.9*	*UDL spans: 2, 4, 7; -->Trk lead [var s = 30] @ 85.8*
7	*UDL spans: 2, 4, 6, 7; -->Tdm lead @ 70.3*	*UDL spans: 1, 3, 5, 8; -->Trk lead [var s = 30] @ 97.4*
8	*UDL spans: 1, 3, 5, 7, 8; -->Tdm lead @ 82.4*	*UDL spans: 2, 4, 6; -->Tdm lead @ 85.2*
9	*UDL spans: 2, 4, 6, 8; -->Tdm lead @ 91.0*	*UDL spans: 1, 3, 5, 7; -->Tdm lead @ 78.8*

Max LL Rotations - Critical Case Desription

Support	(+)Rotations	(-)Rotations
1	*UDL spans: 2, 4, 8, 8; -->Tdm laad @ 18.4*	*UDL spans: 1, 3, 5, 7; -->Tdm lead @ 7.0*
2	*UDL spans: 1, 3, 5, 7; -->Tdm lead @ 7.9*	*UDL spans: 2, 4, 6, 8; -->Tdm lead @ 18.4*
3	*UDL spans: 2, 4, 6, 8; -->Tdm lead @ 19.7*	*UDL spans: 1, 3, 5, 7; <--Trk rear [var s = 20.4927536231884] @ 27.1*
4	*UDL spans: 1, 3, 5, 7; -->Tdm lead @ 31.1*	*UDL spans: 2, 4, 6, 8; -->Tdm laad @ 41.1*
5	*UDL spans: 2, 4, 6, 8; -->Tdm laad @ 42.5*	*UDL spans: 1, 3, 5, 7; -->Tdm lead @ 52.5*
6	*UDL spans: 1, 3, 5, 7; -->Tdm laad @ 53.9*	*UDL spans: 2, 4, 8, 8; -->Tdm lead @ 63.9*
7	*UDL spans: 2, 4, 8, 8; -->Trk lead [var s = 20.4927536231884] @ 9*	*UDL spans: 1, 3, 5, 7; -->Tdm laad @ 75.3*
8	*UDL spans: 1, 3, 5, 7; -->Tdm lead @ 78.8*	*UDL spans: 2, 4, 6, 8; -->Tdm laad @ 87.1*
9	*UDL spans: 2, 4, 8, 8; -->Tdm lead @ 68.0*	*UDL spans: 1, 3, 5, 7; -->Tdm laad @ 78.6*

Max LL Shears - Critical Case Dearipiton

Span	X	(+)Shears	(-)Shears
1	0.00	*UDL spans: 1, 3, 5, 7; -->Tdm lead @ 4.0*	*UDL spans: 2, 4, 6, 8; -->Tdm lead @ 18.4*
1	1.14	*UDL spans: 1 (Rt L = 10.2), 3, 5, 7; -->Tdm lead @ 5.1*	*UDL spans: 1 (Lt L = 1.1), 2, 4, 6, 8; -->Trk lead [var s = 14.463768115942] @ 29.6*
1	2.28	*UDL spans: 1 (Rt L = 9.1), 3, 5, 7; -->Tdm laad @ 6.3*	*UDL spans: 1 (Lt L = 2.3), 2, 4, 6, 8; -->Trk laad [var s = 14] @ 30.3*
1	3.41	*UDL spans: 1 (Rt L = 8.0), 3, 5, 7; -->Tdm lead @ 7.4*	*UDL spans: 1 (Lt L = 3.4), 2, 4, 6, 8; -->Trk lead [var s = 14] @ 31.4*
1	4.55	*UDL spans: 1 (Rt L = 8.8), 3, 5, 7; -->Trk lead [var s = 22.57971014*	*UDL spans: 1 (Lt L = 4.8), 2, 4, 6, 8; -->Trk lead [var s = 14] @ 32.5*
1	5.69	*UDL spans: 1 (Rt L = 5.7), 3, 5, 7; -->Trk laad [var s = 21.42028985*	*UDL spans: 1 (Lt L = 5.7), 2, 4, 6, 8; -->Trk laad [var s = 14] @ 33.7*
1	6.83	*UDL spans: 1 (Rt L = 4.6), 3, 5, 7; -->Trk laad [var s = 20.26086958*	*UDL spans: 1 (Lt L = 6.8), 2, 4, 6, 8; -->Tdm lead @ 6.8*
1	7.96	*UDL spans: 1 (Rt L = 3.4), 3, 5, 7; -->Trk lead [var s = 19.10144927*	*UDL spans: 1 (Lt L = 8.0), 2, 4, 6, 8; -->Tdm lead @ 8.0*
1	9.10	*UDL spans: 1 (Rt L = 2.3), 3, 5, 7; -->Trk lead [var s = 17.94202898*	*UDL spans: 1 (Lt L = 9.1), 2, 4, 8, 8; -->Tdm lead @ 9.1*
1	10.24	*UDL spans: 1 (Rt L = 1.1), 3, 5, 7; -->Trk lead [var s = 16.78260869*	*UDL spans: 1 (Lt L = 10.2), 2, 4, 6, 8; -->Tdm laad @ 10.2*
1	11.38	*UDL spans: 3, 5, 7; -->Tdm lead @ 29.8*	*UDL spans: 1, 2, 4, 6, 8; -->Tdm lead @ 11.4*
2	0.00	*UDL spans: 1, 2, 4, 6, 8; -->Tdm lead @ 15.4*	*UDL spans: 3, 5, 7; -->Tdm laad @ 29.8*
2	1.14	*UDL spans: 1, 2 (Rt L = 10.2), 4, 8, 8; -->Tdm laad @ 16.5*	*UDL spans: 2 (Lt L = 1.1), 3, 5, 7; -->Trk laad [var s = 14.463768115942] @ 41.0*
2	2.28	*UDL spans: 1, 2 (Rt L = 9.1), 4, 8, 8; -->Tdm laad @ 17.7*	*UDL spans: 2 (Lt L = 2.3), 3, 5, 7; -->Trk laad [var s = 14] @ 41.6*
2	3.41	*UDL spans: 1, 2 (Rt L = 8.0), 4, 6, 8; -->Tdm laad @ 18.8*	*UDL spans: 2 (Lt L = 3.4), 3, 5, 7; -->Trk lead [var s = 14] @ 42.8*
2	4.55	*UDL spans: 1, 2 (Rt L = 6.8), 4, 8, 8; -->Trk lead [var s = 14] @ 29.9*	*UDL spans: 2 (Lt L = 4.6), 3, 5, 7; -->Trk laad [var s = 14] @ 43.9*
2	5.69	*UDL spans: 1, 2 (Rt L = 5.7), 4, 6, 8; -->Trk lead [var s = 14] @ 31.1*	*UDL spans: 2 (Lt L = 5.7), 3, 5, 7; -->Trk lead [var s = 14] @ 45.1*
2	6.83	*UDL spans: 1, 2 (Rt L = 4.6), 4, 8, 8; -->Trk laad [var s = 14] @ 32.2*	*UDL spans: 2 (Lt L = 6.8), 3, 5, 7; -->Tdm lead @ 18.2*
2	7.96	*UDL spans: 1, 2 (Rt L = 3.4), 4, 6, 8; -->Trk lead [var s = 14] @ 33.3*	*UDL spans: 2 (Lt L = 8.0), 3, 5, 7; -->Tdm laad @ 19.3*
2	9.10	*UDL spans: 1, 2 (Rt L = 2.3), 4, 6, 8; -->Trk laad [var s = 14] @ 34.5*	*UDL spans: 2 (Lt L = 9.1), 3, 5, 7; -->Tdm lead @ 20.5*
2	10.24	*UDL spans: 1, 2 (Rt L = 1.1), 4, 6, 8; -->Trk laad [var s = 15.159420*	*UDL spans: 2 (Lt L = 10.2), 3, 5, 7; -->Tdm lead @ 21.6*

2	11.38	UDL spans: 1, 4, 8, 8; -->Tdm leed @ 7.9	UDL spans: 2, 3, 5, 7; -->Tdm leed @ 22.7
3	0.00	UDL spans: 2, 3, 5, 7; -->Tdm leed @ 26.8	UDL spans: 1, 4, 6, 8; -->Tdm leed @ 41.1
3	1.14	UDL spans: 2, 3 (Rt L = 10.2), 5, 7; -->Tdm lead @ 27.9	UDL spans: 1, 3 (Lt L = 1.1), 4, 6, 8; <--Trk reer [var s = 14.463768115942] @ 38.4
3	2.28	UDL spens: 2, 3 (Rt L = 9.1), 5, 7; -->Tdm lead @ 29.0	UDL spans: 1, 3 (Lt L = 2.3), 4, 6, 8; <--Trk rear [var s = 14] @ 39.0
3	3.41	UDL spans: 2, 3 (Rt L = 8.0), 5, 7; -->Tdm lead @ 30.2	UDL spans: 1, 3 (Lt L = 3.4), 4, 6, 8; -->Trk lead [var s = 14] @ 54.2
3	4.55	UDL spans: 2, 3 (Rt L = 6.8), 5, 7; <--Trk reer [var s = 22.579710144	UDL spans: 1, 3 (Lt L = 4.6), 4, 6, 8; -->Trk lead [var s = 14] @ 55.3
3	5.69	UDL spans: 2, 3 (Rt L = 5.7), 5, 7; -->Trk lead [var s = 14] @ 42.4	UDL spans: 1, 3 (Lt L = 5.7), 4, 8, 8; -->Trk lead [var s = 14] @ 56.4
3	6.83	UDL spans: 2, 3 (Rt L = 4.6), 5, 7; -->Trk leed [var s = 14] @ 43.6	UDL spans: 1, 3 (Lt L = 6.8), 4, 6, 8; -->Trk leed [ver s = 23.0434782808896] @ 43.6
3	7.96	UDL spans: 2, 3 (Rt L = 3.4), 5, 7; -->Trk leed [var s = 14] @ 44.7	UDL spans: 1, 3 (Lt L = 8.0), 4, 6, 8; -->Tdm leed @ 30.7
3	9.10	UDL spans: 2, 3 (Rt L = 2.3), 5, 7; -->Trk leed [var s = 14] @ 45.9	UDL spans: 1, 3 (Lt L = 9.1), 4, 6, 8; -->Tdm leed @ 31.8
3	10.24	UDL spans: 2, 3 (Rt L = 1.1), 5, 7; -->Trk lead [var s = 14.69565217	UDL spans: 1, 3 (Lt L = 10.2), 4, 6, 8; -->Tdm lead @ 33.0
3	11.38	UDL spans: 2, 5, 7; -->Tdm lead @ 19.7	UDL spans: 1, 3, 4, 6, 8; -->Tdm lead @ 34.1
4	0.00	UDL spans: 1, 3, 4, 6, 8; -->Tdm leed @ 38.1	UDL spans: 2, 5, 7; -->Tdm leed @ 52.5
4	1.14	UDL spans: 1, 3, 4 (Rt L = 10.2), 6, 8; -->Tdm leed @ 39.3	UDL spans: 2, 4 (Lt L = 1.1), 5, 7; <--Trk rear [var s = 14.463768115942] @ 49.7
4	2.28	UDL spans: 1, 3, 4 (Rt L = 9.1), 6, 8; -->Tdm leed @ 40.4	UDL spans: 2, 4 (Lt L = 2.3), 5, 7; <--Trk reer [var s = 14] @ 50.4
4	3.41	UDL spans: 1, 3, 4 (Rt L = 8.0), 6, 8; -->Tdm lead @ 41.5	UDL spans: 2, 4 (Lt L = 3.4), 5, 7; -->Trk lead [var s = 14] @ 65.5
4	4.55	UDL spans: 1, 3, 4 (Rt L = 6.8), 6, 8; <--Trk rear [ver s = 22.5797101	UDL spans: 2, 4 (Lt L = 4.6), 5, 7; -->Trk leed [ver s = 14] @ 66.7
4	5.69	UDL spans: 1, 3, 4 (Rt L = 5.7), 8, 8; -->Trk lead [ver s = 14] @ 53.8	UDL spans: 2, 4 (Lt L = 5.7), 5, 7; -->Trk lead [ver s = 14] @ 67.8
4	6.83	UDL spans: 1, 3, 4 (Rt L = 4.6), 6, 8; -->Trk lead [ver s = 14] @ 55.0	UDL spans: 2, 4 (Lt L = 6.8), 5, 7; -->Trk lead [var s = 22.5797101449275] @ 54.9
4	7.96	UDL spans: 1, 3, 4 (Rt L = 3.4), 8, 8; -->Trk lead [ver s = 14] @ 56.1	UDL spans: 2, 4 (Lt L = 8.0), 5, 7; -->Tdm lead @ 42.1
4	9.10	UDL spens: 1, 3, 4 (Rt L = 2.3), 6, 8; -->Trk lead [var s = 14] @ 57.2	UDL spans: 2, 4 (Lt L = 9.1), 5, 7; -->Tdm lead @ 43.2
4	10.24	UDL spans: 1, 3, 4 (Rt L = 1.1), 8, 8; -->Trk leed [var s = 14.463768	UDL spans: 2, 4 (Lt L = 10.2), 5, 7; -->Tdm lead @ 44.4
4	11.38	UDL spans: 1, 3, 6, 8; -->Tdm lead @ 31.1	UDL spans: 2, 4, 5, 7; -->Tdm lead @ 45.5
5	0.00	UDL spans: 2, 4, 5, 7; -->Tdm lead @ 49.5	UDL spans: 1, 3, 8, 8; -->Tdm lead @ 63.9
5	1.14	UDL spans: 2, 4, 5 (Rt L = 10.2), 7; -->Tdm lead @ 50.6	UDL spans: 1, 3, 5 (Lt L = 1.1), 6, 8; <--Trk rear [var s = 14.463768115942] @ 61.1
5	2.28	UDL spans: 2, 4, 5 (Rt L = 9.1), 7; -->Tdm lead @ 51.8	UDL spans: 1, 3, 5 (Lt L = 2.3), 6, 8; <--Trk rear [var s = 14] @ 61.8
5	3.41	UDL spans: 2, 4, 5 (Rt L = 8.0), 7; -->Tdm lead @ 52.9	UDL spans: 1, 3, 5 (Lt L = 3.4), 6, 8; -->Trk lead [var s = 14] @ 78.9
5	4.55	UDL spans: 2, 4, 5 (Rt L = 6.8), 7; <--Trk rear [var s = 22.579710144	UDL spans: 1, 3, 5 (Lt L = 4.6), 8, 8; -->Trk lead [var s = 14] @ 78.0
5	5.69	UDL spans: 2, 4, 5 (Rt L = 5.7), 7; -->Trk lead [var s = 14] @ 65.2	UDL spens: 1, 3, 5 (Lt L = 5.7), 6, 8; -->Trk leed [var s = 14] @ 79.2
5	6.83	UDL spans: 2, 4, 5 (Rt L = 4.6), 7; -->Trk leed [var s = 14] @ 66.3	UDL spans: 1, 3, 5 (Lt L = 8.8), 8, 8; -->Trk leed [var s = 22.5797101449275] @ 66.3
5	7.96	UDL spans: 2, 4, 5 (Rt L = 3.4), 7; -->Trk lead [ver s = 14] @ 67.5	UDL spans: 1, 3, 5 (Lt L = 8.0), 6, 8; -->Tdm lead @ 53.5
5	9.10	UDL spans: 2, 4, 5 (Rt L = 2.3), 7; -->Trk lead [var s = 14] @ 68.8	UDL spans: 1, 3, 5 (Lt L = 9.1), 8, 8; -->Tdm leed @ 54.6
5	10.24	UDL spans: 2, 4, 5 (Rt L = 1.1), 7; -->Trk leed [ver s = 14.463768115	UDL spans: 1, 3, 5 (Lt L = 10.2), 6, 8; -->Tdm lead @ 55.7
5	11.38	UDL spans: 2, 4, 7; -->Tdm leed @ 42.5	UDL spans: 1, 3, 5, 6, 8; -->Tdm lead @ 56.9
6	0.00	UDL spans: 1, 3, 5, 6, 8; -->Tdm leed @ 60.9	UDL spans: 2, 4, 7; -->Tdm leed @ 75.3
6	1.14	UDL spans: 1, 3, 5, 6 (Rt L = 10.2), 8; -->Tdm leed @ 62.0	UDL spans: 2, 4, 6 (Lt L = 1.1), 7; <--Trk reer [ver s = 14.695652173913] @ 72.7
6	2.28	UDL spans: 1, 3, 5, 8 (Rt L = 9.1), 8; -->Tdm leed @ 63.2	UDL spens: 2, 4, 6 (Lt L = 2.3), 7; <--Trk reer [ver s = 14] @ 73.1
6	3.41	UDL spans: 1, 3, 5, 8 (Rt L = 8.0), 8; -->Tdm leed @ 64.3	UDL spans: 2, 4, 6 (Lt L = 3.4), 7; -->Trk leed [var s = 14] @ 88.3
6	4.55	UDL spans: 1, 3, 5, 6 (Rt L = 8.8), 8; <--Trk reer [ver s = 23.0434782	UDL spans: 2, 4, 8 (Lt L = 4.6), 7; -->Trk leed [var s = 14] @ 89.4
6	5.69	UDL spans: 1, 3, 5, 6 (Rt L = 5.7), 8; -->Trk lead [var s = 14] @ 76.6	UDL spans: 2, 4, 8 (Lt L = 5.7), 7; -->Trk leed [var s = 14] @ 90.6
6	6.83	UDL spans: 1, 3, 5, 6 (Rt L = 4.6), 8; -->Trk lead [var s = 14] @ 77.7	UDL spans: 2, 4, 8 (Lt L = 6.8), 7; -->Trk lead [var s = 22.5797101449275] @ 77.7
6	7.96	UDL spans: 1, 3, 5, 6 (Rt L = 3.4), 8; -->Trk leed [var s = 14] @ 78.8	UDL spans: 2, 4, 8 (Lt L = 8.0), 7; -->Tdm leed @ 64.8
6	9.10	UDL spans: 1, 3, 5, 6 (Rt L = 2.3), 8; -->Trk lead [var s = 14] @ 80.0	UDL spans: 2, 4, 6 (Lt L = 9.1), 7; -->Tdm leed @ 66.0
6	10.24	UDL spans: 1, 3, 5, 8 (Rt L = 1.1), 8; -->Trk lead [var s = 14.463768	UDL spans: 2, 4, 6 (Lt L = 10.2), 7; -->Tdm lead @ 67.1
6	11.38	UDL spans: 1, 3, 5, 8; -->Tdm leed @ 53.9	UDL spans: 2, 4, 6, 7; -->Tdm leed @ 88.2
7	0.00	UDL spans: 2, 4, 8, 7; -->Tdm leed @ 72.3	UDL spans: 1, 3, 5, 8; -->Tdm lead @ 87.1
7	1.14	UDL spans: 2, 4, 6, 7 (Rt L = 10.2); -->Tdm lead @ 73.4	UDL spans: 1, 3, 5, 7 (Lt L = 1.1), 8; <--Trk rear [var s = 15.1594202898551] @ 84.5
7	2.28	UDL spans: 2, 4, 8, 7 (Rt L = 9.1); -->Tdm lead @ 74.5	UDL spans: 1, 3, 5, 7 (Lt L = 2.3), 8; <--Trk reer [var s = 14] @ 84.5
7	3.41	UDL spans: 2, 4, 6, 7 (Rt L = 8.0); -->Tdm lead @ 75.7	UDL spans: 1, 3, 5, 7 (Lt L = 3.4), 8; -->Trk lead [ver s = 14] @ 99.7
7	4.55	UDL spens: 2, 4, 6, 7 (Rt L = 8.8); -->Tdm lead @ 78.8	UDL spans: 1, 3, 5, 7 (Lt L = 4.6), 8; -->Trk leed [ver s = 14] @ 100.8
7	5.69	UDL spans: 2, 4, 6, 7 (Rt L = 5.7); -->Trk lead [var s = 14] @ 87.9	UDL spans: 1, 3, 5, 7 (Lt L = 5.7), 8; -->Trk leed [ver s = 14] @ 101.9
7	6.83	UDL spans: 2, 4, 6, 7 (Rt L = 4.8); -->Trk lead [ver s = 14] @ 89.1	UDL spans: 1, 3, 5, 7 (Lt L = 8.8), 8; -->Trk lead [ver s = 14] @ 103.1
7	7.96	UDL spans: 2, 4, 6, 7 (Rt L = 3.4); -->Trk lead [ver s = 14] @ 90.2	UDL spans: 1, 3, 5, 7 (Lt L = 8.0), 8; -->Tdm leed @ 76.2
7	9.10	UDL spans: 2, 4, 6, 7 (Rt L = 2.3); -->Trk leed [ver s = 14] @ 91.4	UDL spans: 1, 3, 5, 7 (Lt L = 9.1), 8; -->Tdm leed @ 77.3
7	10.24	UDL spans: 2, 4, 6, 7 (Rt L = 1.1); -->Trk leed [ver s = 14.463768115	UDL spans: 1, 3, 5, 7 (Lt L = 10.2), 8; -->Tdm leed @ 78.5
7	11.38	UDL spans: 2, 4, 6; -->Tdm lead @ 65.2	UDL spens: 1, 3, 5, 7, 8; -->Tdm lead @ 79.6
8	0.00	UDL spans: 1, 3, 5, 7, 8; -->Tdm lead @ 83.6	UDL spans: 2, 4, 6; -->Tdm lead @ 65.2
8	1.14	UDL spans: 1, 3, 5, 7, 8 (Rt L = 10.2); -->Tdm lead @ 84.8	UDL spans: 2, 4, 6, 8 (Lt L = 1.1); -->Trk leed [var s = 16.7826086956522] @ 94.8
8	2.28	UDL spans: 1, 3, 5, 7, 8 (Rt L = 9.1); -->Tdm leed @ 85.9	UDL spans: 2, 4, 8, 8 (Lt L = 2.3); -->Trk leed [var s = 17.9420289855072] @ 95.9
8	3.41	UDL spans: 1, 3, 5, 7, 8 (Rt L = 8.0); -->Tdm leed @ 87.0	UDL spans: 2, 4, 6, 8 (Lt L = 3.4); -->Trk lead [var s = 19.1014492753623] @ 97.0
8	4.55	UDL spans: 1, 3, 5, 7, 8 (Rt L = 8.8); -->Tdm lead @ 88.2	UDL spans: 2, 4, 6, 8 (Lt L = 4.8); -->Trk lead [ver s = 20.2608695652174] @ 98.2
8	5.69	UDL spans: 1, 3, 5, 7, 8 (Rt L = 5.7); -->Trk lead [var s = 14] @ 99.3	UDL spans: 2, 4, 6, 8 (Lt L = 5.7); -->Trk lead [var s = 21.4202898550725] @ 99.3
8	6.83	UDL spans: 1, 3, 5, 7, 8 (Rt L = 4.6); -->Trk leed [var s = 14] @ 100.	UDL spans: 2, 4, 6, 8 (Lt L = 6.8); -->Trk lead [var s = 22.5797101449275] @ 100.4
8	7.96	UDL spans: 1, 3, 5, 7, 8 (Rt L = 3.4); -->Trk lead [var s = 14] @ 101.	UDL spans: 2, 4, 6, 8 (Lt L = 8.0); -->Tdm lead @ 87.6
8	9.10	UDL spans: 1, 3, 5, 7, 8 (Rt L = 2.3); -->Trk lead [var s = 14] @ 102.	UDL spans: 2, 4, 6, 8 (Lt L = 9.1); -->Tdm lead @ 88.7
8	10.24	UDL spans: 1, 3, 5, 7, 8 (Rt L = 1.1); -->Trk lead [var s = 14.463788	UDL spans: 2, 4, 6, 8 (Lt L = 10.2); -->Tdm lead @ 89.9
8	11.38	UDL spans: 1, 3, 5, 7; -->Tdm leed @ 76.8	UDL spans: 2, 4, 6, 8; -->Tdm lead @ 91.0

Max LL Moments - Critical Case Desription

Span	X	(+)Moments	(-)Moments
1	0.00	N/A	N/A

1	1.14	UDL spans: 1, 3, 5, 7; -->Tdm lead @ 5.1	UDL spans: 2, 4, 6, 8; -->Tdm laad @ 18.1
1	2.28	UDL spans: 1, 3, 5, 7; -->Tdm lead @ 6.3	UDL spans: 2, 4, 8, 8; -->Tdm lead @ 18.1
1	3.41	UDL spans: 1, 3, 5, 7; -->Tdm laad @ 7.4	UDL spans: 2, 4, 6, 8; -->Tdm lead @ 18.1
1	4.55	UDL spans: 1, 3, 5, 7; -->Trk laad [var s = 22.5797101449275] @ 41	UDL spans: 2, 4, 6, 8; -->Tdm lead @ 18.1
1	5.69	UDL spans: 1, 3, 5, 7; -->Trk laad [var s = 21.4202898550725] @ 41	UDL spans: 2, 4, 6, 8; -->Tdm lead @ 18.1
1	6.83	UDL spans: 1, 3, 5, 7; -->Trk lead [var s = 20.2608895652174] @ 41	UDL spans: 2, 4, 6, 8; -->Tdm laad @ 18.1
1	7.96	UDL spans: 1, 3, 5, 7; -->Trk lead [var s = 19.1014492753623] @ 41	UDL spans: 2, 4, 6, 8; -->Tdm lead @ 18.1
1	9.10	UDL spans: 1 (Rt L = 8.4), 3, 5, 7; -->Trk lead [var s = 17.94202898	UDL spans: 1 (Lt L = 2.9), 2, 4, 6, 8; -->Dbl Tdm lead [Tnd spa = 26] @ 18.2
1	10.24	UDL spans: 1 (Rt L = 2.7), 3, 5, 7; -->Trk lead [var s = 18.78280869	UDL spans: 1 (Lt L = 8.7), 2, 4, 8, 8; -->Trk lead [var s = 14] @ 31.2
1	11.38	UDL spans: 3, 5, 7; -->Tdm lead @ 29.8	UDL spans: 1, 2, 4, 6, 8; <--Trk rear [var s = 14] @ 18.4
2	0.00	UDL spans: 3, 5, 7; -->Tdm lead @ 29.8	UDL spans: 1, 2, 4, 6, 8; <--Trk rear [var s = 14] @ 18.4
2	1.14	UDL spans: 2 (Lt L = 3.2), 3, 5, 7; -->Trk lead [var s = 14.463768115	UDL spans: 1, 2 (Rt L = 8.2), 4, 6, 8; -->Tdm laad @ 8.2
2	2.28	UDL spans: 2, 3; -->Trk lead [var s = 14] @ 27.7	UDL spans: 1, 4, 5, 6, 7, 8; -->Tdm laad @ 8.2
2	3.41	UDL spans: 2, 4, 8, 8; -->Trk lead [var s = 23.7391304347826] @ 52	UDL spans: 1, 3, 5, 7; -->Tdm lead @ 8.2
2	4.55	UDL spans: 2, 4, 6, 8; -->Trk laad [var s = 22.5797101449275] @ 52	UDL spans: 1, 3, 5, 7; -->Trk lead [var s = 20.4927536231884] @ 41.1
2	5.69	UDL spans: 2, 4, 8, 8; -->Trk lead [var s = 21.4202898550725] @ 52	UDL spans: 1, 3, 5, 7; -->Trk lead [var s = 20.4927536231884] @ 41.1
2	6.83	UDL spans: 2, 4, 6, 8; -->Trk lead [var s = 20.2608695652174] @ 52	UDL spans: 1, 3, 5, 7; <--Trk rear [var s = 20.4927536231884] @ 27.1
2	7.96	UDL spans: 2, 4, 8, 8; -->Trk laad [var s = 19.1014492753623] @ 52	UDL spans: 1, 3, 5, 7; -->Tdm laad @ 29.4
2	9.10	UDL spans: 1, 2 (Rt L = 8.9), 4, 6, 8; <--Trk rear [var s = 17.9420289	UDL spans: 2 (Lt L = 2.4), 3, 5, 7; -->Tdm lead @ 29.4
2	10.24	UDL spans: 1, 2 (Rt L = 2.9), 4, 6, 8; <--Trk rear [var s = 16.7826086	UDL spans: 2 (Lt L = 8.5), 3, 5, 7; -->Tdm laad @ 29.4
2	11.38	UDL spans: 1, 4, 8, 8; <--Trk rear [var s = 30] @ 37.6	UDL spans: 2, 3, 5, 7; <--Trk rear [var s = 14] @ 29.8
3	0.00	UDL spans: 1, 4, 8, 8; <--Trk rear [var s = 30] @ 37.6	UDL spans: 2, 3, 5, 7; <--Trk rear [var s = 14] @ 29.8
3	1.14	UDL spans: 1, 3 (Lt L = 2.9), 4, 6, 8; -->Trk lead [var s = 17.2463768	UDL spans: 2, 3 (Rt L = 8.4), 5, 7; -->Tdm lead @ 19.8
3	2.28	UDL spans: 1, 3 (Lt L = 9.1), 4, 6, 8; -->Trk lead [var s = 18.4057971	UDL spans: 2, 3 (Rt L = 2.3), 5, 7; -->Tdm lead @ 19.8
3	3.41	UDL spans: 1, 3, 5, 7; -->Trk lead [var s = 19.5652173913043] @ 4(	UDL spans: 2, 4, 6, 8; -->Tdm lead @ 19.8
3	4.55	UDL spans: 1, 3, 5, 7; -->Trk lead [var s = 20.7246376811594] @ 41	UDL spans: 2, 4, 6, 8; -->Trk lead [var s = 20.0289855072464] @ 52.5
3	5.69	UDL spans: 1, 3, 5, 7; -->Trk lead [var s = 21.8640579710145] @ 42	UDL spans: 2, 4, 8, 8; -->Trk lead [var s = 20.0289855072464] @ 52.5
3	6.83	UDL spans: 1, 3, 5, 7; -->Trk laad [var s = 20.2608695652174] @ 63	UDL spans: 2, 4, 6, 8; <--Trk rear [var s = 20.0289855072464] @ 38.4
3	7.96	UDL spans: 1, 3, 5, 7; -->Trk lead [var s = 19.1014492753623] @ 63	UDL spans: 2, 4, 6, 8; -->Tdm lead @ 40.8
3	9.10	UDL spans: 2, 3 (Rt L = 9.0), 5, 7; <--Trk rear [var s = 17.942028985	UDL spans: 1, 3 (Lt L = 2.4), 4, 6, 8; -->Tdm lead @ 40.8
3	10.24	UDL spans: 2, 3 (Rt L = 2.9), 5, 7; <--Trk rear [var s = 18.782608895	UDL spans: 1, 3 (Lt L = 8.4), 4, 6, 8; -->Tdm lead @ 40.8
3	11.38	UDL spans: 2, 5, 7; <--Trk rear [var s = 30] @ 49.2	UDL spans: 1, 3, 4, 6, 8; -->Trk lead [var s = 14] @ 55.1
4	0.00	UDL spans: 2, 5, 7; <--Trk rear [var s = 30] @ 49.2	UDL spans: 1, 3, 4, 6, 8; -->Trk lead [var s = 14] @ 55.1
4	1.14	UDL spans: 2, 4 (Lt L = 2.9), 5, 7; -->Trk lead [var s = 16.782608895	UDL spans: 1, 3, 4 (Rt L = 8.4), 6, 8; -->Tdm lead @ 31.4
4	2.28	UDL spans: 2, 4 (Lt L = 9.0), 5, 7; -->Trk lead [var s = 17.942028985	UDL spans: 1, 3, 4 (Rt L = 2.4), 6, 8; -->Tdm laad @ 31.4
4	3.41	UDL spans: 2, 4, 8, 8; -->Trk lead [var s = 19.1014492753623] @ 51	UDL spans: 1, 3, 5, 7; -->Tdm lead @ 31.4
4	4.55	UDL spans: 2, 4, 6, 8; -->Trk laad [var s = 20.2608695652174] @ 52	UDL spans: 1, 3, 5, 7; -->Trk laad [var s = 20.0289855072484] @ 63.8
4	5.69	UDL spans: 2, 4, 6, 8; -->Trk lead [var s = 21.4202898550725] @ 53	UDL spans: 1, 3, 5, 7; -->Trk lead [var s = 20.0289855072464] @ 63.8
4	6.83	UDL spans: 2, 4, 6, 8; -->Trk lead [var s = 20.2608895652174] @ 75	UDL spans: 1, 3, 5, 7; <--Trk raar [var s = 20.0289855072464] @ 49.8
4	7.96	UDL spans: 2, 4, 6, 8; -->Trk lead [var s = 19.1014492753623] @ 75	UDL spans: 1, 3, 5, 7; -->Tdm lead @ 52.2
4	9.10	UDL spans: 1, 3, 4 (Rt L = 9.0), 6, 8; <--Trk rear [var s = 17.9420289	UDL spans: 2, 4 (Lt L = 2.4), 5, 7; -->Tdm laad @ 52.2
4	10.24	UDL spans: 1, 3, 4 (Rt L = 2.9), 8, 8; <--Trk rear [var s = 16.7826086	UDL spans: 2, 4 (Lt L = 8.4), 5, 7; -->Tdm laad @ 52.2
4	11.38	UDL spans: 1, 3, 6, 8; <--Trk rear [var s = 30] @ 60.6	UDL spans: 2, 4, 5, 7; -->Trk lead [var s = 14] @ 66.4
5	0.00	UDL spans: 1, 3, 8, 8; <--Trk rear [var s = 30] @ 60.6	UDL spans: 2, 4, 5, 7; -->Trk lead [var s = 14] @ 66.4
5	1.14	UDL spans: 1, 3, 5 (Lt L = 2.9), 6, 8; -->Trk lead [var s = 16.7626086	UDL spans: 2, 4, 5 (Rt L = 8.4), 7; -->Tdm lead @ 42.8
5	2.28	UDL spans: 1, 3, 5 (Lt L = 9.0), 6, 8; -->Trk lead [var s = 17.9420289	UDL spans: 2, 4, 5 (Rt L = 2.4), 7; -->Tdm laad @ 42.8
5	3.41	UDL spans: 1, 3, 5, 7; -->Trk lead [var s = 19.1014492753623] @ 62	UDL spans: 2, 4, 6, 8; -->Tdm lead @ 42.8
5	4.55	UDL spans: 1, 3, 5, 7; -->Trk lead [var s = 20.2608895652174] @ 64	UDL spans: 2, 4, 6, 8; -->Trk lead [var s = 20.0289855072464] @ 75.2
5	5.69	UDL spans: 1, 3, 5, 7; -->Trk lead [var s = 21.4202898550725] @ 86	UDL spans: 2, 4, 6, 8; <--Trk rear [var s = 20.0289855072464] @ 61.2
5	6.83	UDL spans: 1, 3, 5, 7; -->Trk lead [var s = 20.2608695652174] @ 86	UDL spans: 2, 4, 6, 8; <--Trk rear [var s = 20.0289855072464] @ 81.2
5	7.98	UDL spans: 1, 3, 5, 7; -->Trk lead [var s = 19.1014492753623] @ 86	UDL spans: 2, 4, 6, 8; -->Tdm laad @ 63.6
5	9.10	UDL spans: 2, 4, 5 (Rt L = 9.0), 7; <--Trk rear [var s = 17.942028985	UDL spans: 1, 3, 5 (Lt L = 2.4), 6, 8; -->Tdm lead @ 83.8
5	10.24	UDL spans: 2, 4, 5 (Rt L = 2.9), 7; <--Trk rear [var s = 16.782608895	UDL spans: 1, 3, 5 (Lt L = 8.4), 6, 8; -->Tdm lead @ 63.6
5	11.38	UDL spans: 2, 4, 7; -->Trk lead [var s = 30] @ 85.8	UDL spans: 1, 3, 5, 6, 8; <--Trk rear [var s = 14] @ 63.9
6	0.00	UDL spans: 2, 4, 7; -->Trk lead [var s = 30] @ 85.8	UDL spans: 1, 3, 5, 6, 8; <--Trk rear [var s = 14] @ 63.9
6	1.14	UDL spans: 2, 4, 6 (Lt L = 2.9), 7; -->Trk lead [var s = 16.782608695	UDL spans: 1, 3, 5, 6 (Rt L = 8.4), 8; -->Tdm lead @ 54.2
6	2.28	UDL spans: 2, 4, 8 (Lt L = 9.0), 7; -->Trk lead [var s = 17.942028985	UDL spans: 1, 3, 5, 6 (Rt L = 2.4), 8; -->Tdm lead @ 54.2
6	3.41	UDL spans: 2, 4, 8, 8; -->Trk lead [var s = 19.1014492753623] @ 74	UDL spans: 1, 3, 5, 7; -->Tdm lead @ 54.2
6	4.55	UDL spans: 2, 4, 8, 8; -->Trk lead [var s = 20.2608695652174] @ 75	UDL spans: 1, 3, 5, 7; -->Trk lead [var s = 20.0289855072464] @ 86.6
6	5.69	UDL spans: 2, 4, 8, 8; -->Trk lead [var s = 21.8840579710145] @ 96	UDL spans: 1, 3, 5, 7; <--Trk rear [var s = 20.0289855072464] @ 72.6
6	6.83	UDL spans: 2, 4, 8, 8; -->Trk lead [var s = 20.7246376811594] @ 96	UDL spans: 1, 3, 5, 7; <--Trk rear [var s = 20.0289855072464] @ 72.6
6	7.96	UDL spans: 2, 4, 8, 8; -->Trk lead [var s = 19.5652173913043] @ 96	UDL spans: 1, 3, 5, 7; -->Tdm lead @ 75.2
6	9.10	UDL spans: 1, 3, 5, 6 (Rt L = 9.1), 8; <--Trk rear [var s = 18.4057971	UDL spans: 2, 4, 6 (Lt L = 2.3), 7; -->Tdm lead @ 75.2
6	10.24	UDL spans: 1, 3, 5, 6 (Rt L = 3.0), 8; <--Trk rear [var s = 17.2463768	UDL spans: 2, 4, 6 (Lt L = 8.4), 7; -->Tdm lead @ 75.2
6	11.38	UDL spans: 1, 3, 5, 8; -->Trk lead [var s = 30] @ 97.4	UDL spans: 2, 4, 6, 7; -->Trk laad [var s = 14] @ 89.2
7	0.00	UDL spans: 1, 3, 5, 8; -->Trk laad [var s = 30] @ 97.4	UDL spans: 2, 4, 6, 7; -->Trk lead [var s = 14] @ 89.2
7	1.14	UDL spans: 1, 3, 5, 7 (Lt L = 2.9), 8; -->Trk lead [var s = 16.7826086	UDL spans: 2, 4, 6, 7 (Rt L = 8.5); -->Tdm laad @ 65.6
7	2.28	UDL spans: 1, 3, 5, 7 (Lt L = 8.9), 8; -->Trk laad [var s = 17.9420289	UDL spans: 2, 4, 6, 7 (Rt L = 2.4); -->Tdm lead @ 65.6
7	3.41	UDL spans: 1, 3, 5, 7; -->Trk lead [var s = 19.1014492753623] @ 85	UDL spans: 2, 4, 6, 8; -->Tdm lead @ 65.6
7	4.55	UDL spans: 1, 3, 5, 7; -->Trk lead [var s = 20.2608895652174] @ 86	UDL spans: 2, 4, 6, 8; -->Trk laad [var s = 20.4927536231884] @ 98.4
7	5.89	UDL spans: 1, 3, 5, 7; -->Trk lead [var s = 21.4202898550725] @ 87	UDL spans: 2, 4, 8, 8; <--Trk rear [var s = 20.4927536231884] @ 84.4

VQ-093
Rutland, VT
Steel Truss: Ripley Road over Otter Creek

7	6.83	UDL spans: 1, 3, 5, 7; -->Trk lead [var s = 22.5797101449275] @ 89	UDL spans: 2, 4, 6, 8; <--Trk raar [var s = 20.4927536231884] @ 84.4
7	7.96	UDL spans: 1, 3, 5, 7; -->Trk lead [var s = 23.7391304347826] @ 90	UDL spans: 2, 4, 6, 8; -->Tdm lead @ 86.8
7	9.10	UDL spans: 1, 3, 5, 7; -->Trk lead [var s = 14] @ 91.4	UDL spans: 2, 4, 6, 8; -->Tdm lead @ 88.8
7	10.24	UDL spans: 2, 4, 6, 7 (Rt L = 3.2); -->Trk laad [var s = 14.46376811	UDL spans: 1, 3, 5, 7 (Lt L = 8.2), 8; -->Tdm lead @ 86.8
7	11.38	UDL spans: 2, 4, 6; -->Tdm lead @ 65.2	UDL spans: 1, 3, 5, 7, 8; -->Trk lead [var s = 14] @ 100.6
8	0.00	UDL spans: 2, 4, 6; -->Tdm lead @ 65.2	UDL spans: 1, 3, 5, 7, 8; -->Trk lead [var s = 14] @ 100.6
8	1.14	UDL spans: 2, 4, 6, 8 (Lt L = 2.7); -->Trk lead [var s = 16.782608695	UDL spans: 1, 3, 5, 7, 8 (Rt L = 8.7); <--Trk rear [var s = 14] @ 87.8
8	2.28	UDL spans: 2, 4, 6, 8 (Lt L = 8.4); -->Trk lead [var s = 17.942028985	UDL spans: 1, 3, 5, 7, 8 (Rt L = 2.9); -->Tdm lead @ 76.9
8	3.41	UDL spans: 2, 4, 6, 8; -->Trk lead [var s = 19.1014492753623] @ 97	UDL spans: 1, 3, 5, 7; -->Tdm lead @ 78.9
8	4.55	UDL spans: 2, 4, 6, 8; -->Trk lead [var s = 20.2608895652174] @ 98	UDL spans: 1, 3, 5, 7; -->Tdm lead @ 78.9
8	5.69	UDL spans: 2, 4, 6, 8; -->Trk lead [var s = 21.4202898550725] @ 99	UDL spans: 1, 3, 5, 7; -->Tdm lead @ 78.9
8	6.83	UDL spans: 2, 4, 6, 8; -->Trk lead [var s = 22.5797101449275] @ 10	UDL spans: 1, 3, 5, 7; -->Tdm lead @ 78.9
8	7.96	UDL spans: 2, 4, 6, 8; -->Tdm laad @ 87.6	UDL spans: 1, 3, 5, 7; -->Tdm lead @ 78.9
8	9.10	UDL spans: 2, 4, 6, 8; -->Tdm lead @ 88.7	UDL spans: 1, 3, 5, 7; -->Tdm lead @ 78.9
8	10.24	UDL spans: 2, 4, 6, 8; -->Tdm laad @ 89.9	UDL spans: 1, 3, 5, 7; -->Tdm lead @ 78.9
8	11.38	N/A	N/A

VQ-093
Rutland, VT
Steel Truss: Ripley Road over Otter Creek

Interior Positive Moment Dead Loads 1 of 4

Analysis ID = 4 Dead Load

Loading Type: Stationary		Units				
Modulus of Elasticity (E)		Force		Length		
$E = Eo \times 10^x$		All input parameters must be in consistent units. Output values are in the same units as input.		Units used to specify span L are considered master units. Master units are used for all input and output data except parameters on the right are in sub units. Specify number of sub units per one master unit in the Master/Sub field (e.g. 1000 for m/mm or 12 for ft/in).	Parameter	Master/Sub
					I (sub^4)	1
					E (force/sub^2)	1
					Settl. (sub)	1
Eo =	1	Force Unit Name:	kip	Master Length Unit Name: feet	Defl. (sub)	1
x =	1	Note: Force and master length unit names above have no effect on analysis and are for information only				

	Supports									
	Supp 1	Supp 2	Supp 3	Supp 4	Supp 5	Supp 6	Supp 7	Supp 8	Supp 9	Supp 10
Type	pin	pin	pin	pin	pin	pin	pin	pin	pin	
Settlement										

		Spans								
		Span 1	Span 2	Span 3	Span 4	Span 5	Span 6	Span 7	Span 8	Span 9
Segment 1	L	11.375	11.375	11.375	11.375	11.375	11.375	11.375	11.375	
	I	1	1	1	1	1	1	1	1	
Segment 2	L									
	I									
Segment 3	L									
	I									
Segment 4	L									
	I									
Segment 5	L									
	I									
Segment 6	L									
	I									
Segment 7	L									
	I									
Segment 8	L									
	I									
Segment 9	L									
	I									
Segment 10	L									
	I									
Segment 11	L									
	I									
Segment 12	L									
	I									
Segment 13	L									
	I									
	Span L =	11.375	11.375	11.375	11.375	11.375	11.375	11.375	11.375	0

	Distributed Loads									
	Loading 1	Loading 2	Loading 3	Loading 4	Loading 5	Loading 6	Loading 7	Loading 8	Loading 9	Loading 10
x	0									
L	91									
w1	1.32									
w2	1.32									

		P-Loads								
		Span 1	Span 2	Span 3	Span 4	Span 5	Span 6	Span 7	Span 8	Span 9
Loading 1	x									
	P									
Loading 2	x									
	P									
Loading 3	x									

VQ-093
Rutland, VT
Steel Truss: Ripley Road over Otter Creek

2 of 4

Loading 3	P									
Loading 4	x									
	P									
Loading 5	x									
	P									
Loading 6	x									
	P									
Loading 7	x									
	P									
Loading 8	x									
	P									
Loading 9	x									
	P									
Loading 10	x									
	P									

		M-Loads								
		Span 1	Span 2	Span 3	Span 4	Span 5	Span 6	Span 7	Span 8	Span 9
Loading 1	x									
	M									
Loading 2	x									
	M									
Loading 3	x									
	M									
Loading 4	x									
	M									
Loading 5	x									
	M									

Support Reactions & Rotations

	Sup 1	Sup 2	Sup 3	Sup 4	Sup 5	Sup 6	Sup 7	Sup 8	Sup 9
Mom R	n/a	n/e	n/a	n/a	n/a	n/a	n/e	n/e	n/e
Vert R	5.9	17.0	14.5	15.2	14.9	15.2	14.5	17.0	5.9
Rotation	-4.67340	1.25180	-0.33381	0.08345	0.00000	-0.08345	0.33381	-1.25180	4.67340

Moments and Shears

Span	X	Shear	Moment	
1	0.00	5.9	0.0	*supp 1*
1	1.14	4.4	5.9	*pt 0.1*
1	2.28	2.9	10.1	*pt 0.2*
1	3.41	1.4	12.5	*pt 0.3*
1	4.49	0.0	13.3	*seg 1 (+)Mmax*
1	4.55	-0.1	13.3	*pt 0.4*
1	5.69	-1.6	12.3	*pt 0.5*
1	6.83	-3.1	9.7	*pt 0.6*
1	7.96	-4.6	5.3	*pt 0.7*
1	9.10	-6.1	-0.8	*pt 0.8*
1	10.24	-7.6	-8.6	*pt 0.9*
1	11.38	-9.1	-18.0	*supp 2*
2	0.00	7.9	-18.0	*supp 2*
2	1.14	6.4	-9.9	*pt 0.1*
2	2.28	4.9	-3.4	*pt 0.2*
2	3.41	3.4	1.3	*pt 0.3*
2	4.55	1.9	4.4	*pt 0.4*
2	5.69	0.4	5.7	*pt 0.5*
2	6.01	0.0	5.8	*seg 1 (+)Mmax*
2	6.83	-1.1	5.4	*pt 0.6*
2	7.96	-2.6	3.3	*pt 0.7*
2	9.10	-4.1	-0.5	*pt 0.8*
2	10.24	-5.6	-6.0	*pt 0.9*
2	11.38	-7.1	-13.2	*supp 3*
3	0.00	7.4	-13.2	*supp 3*
3	1.14	5.9	-5.7	*pt 0.1*
3	2.28	4.4	0.2	*pt 0.2*
3	3.41	2.9	4.3	*pt 0.3*
3	4.55	1.4	6.8	*pt 0.4*
3	5.60	0.0	7.5	*seg 1 (+)Mmax*

31

3 of 4

3	5.69	-0.1	7.5	*pt 0.5*
3	6.83	-1.6	8.5	*pt 0.6*
3	7.96	-3.1	3.8	*pt 0.7*
3	9.10	-4.6	-0.8	*pt 0.8*
3	10.24	-6.1	-6.7	*pt 0.9*
3	11.38	-7.6	-14.5	*supp 4*
4	0.00	7.5	-14.5	*supp 4*
4	1.14	6.0	-6.8	*pt 0.1*
4	2.28	4.5	-0.8	*pt 0.2*
4	3.41	3.0	3.5	*pt 0.3*
4	4.55	1.5	6.1	*pt 0.4*
4	5.69	0.0	7.0	*pt 0.5*
4	5.72	0.0	7.0	*seg 1 (+)Mmax*
4	6.83	-1.5	6.2	*pt 0.6*
4	7.96	-3.0	3.7	*pt 0.7*
4	9.10	-4.5	-0.5	*pt 0.8*
4	10.24	-6.0	-6.4	*pt 0.9*
4	11.38	-7.5	-14.1	*supp 5*
5	0.00	7.5	-14.1	*supp 5*
5	1.14	6.0	-6.4	*pt 0.1*
5	2.28	4.5	-0.5	*pt 0.2*
5	3.41	3.0	3.7	*pt 0.3*
5	4.55	1.5	6.2	*pt 0.4*
5	5.66	0.0	7.0	*seg 1 (+)Mmax*
5	5.69	0.0	7.0	*pt 0.5*
5	6.83	-1.5	6.1	*pt 0.6*
5	7.96	-3.0	3.5	*pt 0.7*
5	9.10	-4.5	-0.8	*pt 0.8*
5	10.24	-6.0	-6.8	*pt 0.9*
5	11.38	-7.5	-14.5	*supp 6*
6	0.00	7.6	-14.5	*supp 8*
6	1.14	6.1	-6.7	*pt 0.1*
6	2.28	4.6	-0.6	*pt 0.2*
6	3.41	3.1	3.8	*pt 0.3*
6	4.55	1.6	6.5	*pt 0.4*
6	5.69	0.1	7.5	*pt 0.5*
6	5.78	0.0	7.5	*seg 1 (+)Mmax*
6	6.83	-1.4	6.8	*pt 0.6*
6	7.96	-2.9	4.3	*pt 0.7*
6	9.10	-4.4	0.2	*pt 0.8*
6	10.24	-5.9	-5.7	*pt 0.9*
6	11.38	-7.4	-13.2	*supp 7*
7	0.00	7.1	-13.2	*supp 7*
7	1.14	5.6	-6.0	*pt 0.1*
7	2.28	4.1	-0.5	*pt 0.2*
7	3.41	2.6	3.3	*pt 0.3*
7	4.55	1.1	5.4	*pt 0.4*
7	5.37	0.0	5.8	*seg 1 (+)Mmax*
7	5.69	-0.4	5.7	*pt 0.5*
7	6.83	-1.9	4.4	*pt 0.8*
7	7.96	-3.4	1.3	*pt 0.7*
7	9.10	-4.9	-3.4	*pt 0.8*
7	10.24	-6.4	-9.9	*pt 0.9*
7	11.38	-7.9	-18.0	*supp 8*
8	0.00	9.1	-18.0	*supp 8*
8	1.14	7.6	-8.6	*pt 0.1*
8	2.28	6.1	-0.8	*pt 0.2*
8	3.41	4.6	5.3	*pt 0.3*
8	4.55	3.1	9.7	*pt 0.4*
8	5.69	1.6	12.3	*pt 0.5*
8	6.83	0.1	13.3	*pt 0.6*
8	6.89	0.0	13.3	*seg 1 (+)Mmax*
8	7.96	-1.4	12.5	*pt 0.7*
8	9.10	-2.9	10.1	*pt 0.8*
8	10.24	-4.4	5.9	*pt 0.9*
8	11.38	-5.9	0.0	*supp 9*

32

4 of 4

33

Interior Negative Moment Strip Dead Loads 1 of 4

Analysis ID = 4 Dead Load

Loading Type: Stationary		Units				
Modulus of Elasticity (E)		Force	Length			
		All input parameters must be in consistent units. Output values are in the same units as input.	Units used to specify span L are considered master units. Master units are used for all input and output data except parameters on the right are in sub units. Specify number of sub units per one master unit in the Master/Sub field (e.g. 1000 for m/mm or 12 for ft/in).		Parameter	Master/Sub
$E = Eo \times 10^x$					I (sub^4)	1
					E (force/sub^2)	1
					Sett. (sub)	1
Eo =	1	Force Unit Name: kip	Master Length Unit Name: feet		Defl. (sub)	1
x =	1	Note: Force and master length unit names above have no effect on analysis and are for information only				

	Supports									
	Supp 1	Supp 2	Supp 3	Supp 4	Supp 5	Supp 6	Supp 7	Supp 8	Supp 9	Supp 10
Type	pin	pin	pin	pin	pin	pin	pin	pin	pin	
Settlement										

		Spans								
		Span 1	Span 2	Span 3	Span 4	Span 5	Span 6	Span 7	Span 8	Span 9
Segment 1	L	11.375	11.375	11.375	11.375	11.375	11.375	11.375	11.375	
	I	1	1	1	1	1	1	1	1	
Segment 2	L									
	I									
Segment 3	L									
	I									
Segment 4	L									
	I									
Segment 5	L									
	I									
Segment 6	L									
	I									
Segment 7	L									
	I									
Segment 8	L									
	I									
Segment 9	L									
	I									
Segment 10	L									
	I									
Segment 11	L									
	I									
Segment 12	L									
	I									
Segment 13	L									
	I									
	Span L =	11.375	11.375	11.375	11.375	11.375	11.375	11.375	11.375	0

	Distributed Loads									
	Loading 1	Loading 2	Loading 3	Loading 4	Loading 5	Loading 6	Loading 7	Loading 8	Loading 9	Loading 10
x	0									
L	91									
w1	1.07									
w2	1.07									

		P-Loads								
		Span 1	Span 2	Span 3	Span 4	Span 5	Span 6	Span 7	Span 8	Span 9
Loading 1	x									
	P									
Loading 2	x									
	P									
Loading 3	x									

VQ-093
Rutland, VT
Steel Truss: Ripley Road over Otter Creek

Loading 3	P									
Loading 4	x									
	P									
Loading 5	x									
	P									
Loading 6	x									
	P									
Loading 7	x									
	P									
Loading 8	x									
	P									
Loading 9	x									
	P									
Loading 10	x									
	P									

		M-Loads								
		Span 1	Span 2	Span 3	Span 4	Span 5	Span 6	Span 7	Span 8	Span 9
Loading 1	x									
	M									
Loading 2	x									
	M									
Loading 3	x									
	M									
Loading 4	x									
	M									
Loading 5	x									
	M									

Support Reactions & Rotations

	Sup 1	Sup 2	Sup 3	Sup 4	Sup 5	Sup 6	Sup 7	Sup 8	Sup 9
Mom R	n/a	n/a	n/a	n/a	n/a	n/a	n/e	n/a	n/e
Vert R	4.8	13.8	11.7	12.3	12.1	12.3	11.7	13.8	4.8
Rotation	-3.78829	1.01472	-0.27059	0.06765	0.00000	-0.06785	0.27059	-1.01472	3.78829

Moments and Shears

Span	X	Shear	Moment	
1	0.00	4.8	0.0	*supp 1*
1	1.14	3.6	4.8	*pt 0.1*
1	2.28	2.4	8.1	*pt 0.2*
1	3.41	1.1	10.1	*pt 0.3*
1	4.49	0.0	10.8	*seg 1 (+)Mmax*
1	4.55	-0.1	10.8	*pt 0.4*
1	5.69	-1.3	10.0	*pt 0.5*
1	6.83	-2.5	7.8	*pt 0.6*
1	7.96	-3.7	4.3	*pt 0.7*
1	9.10	-4.9	-0.6	*pt 0.8*
1	10.24	-6.2	-6.9	*pt 0.9*
1	11.38	-7.4	-14.6	*supp 2*
2	0.00	6.4	-14.8	*supp 2*
2	1.14	5.2	-8.0	*pt 0.1*
2	2.28	4.0	-2.8	*pt 0.2*
2	3.41	2.8	1.1	*pt 0.3*
2	4.55	1.8	3.6	*pt 0.4*
2	5.69	0.3	4.6	*pt 0.5*
2	6.01	0.0	4.7	*seg 1 (+)Mmax*
2	6.83	-0.9	4.3	*pt 0.6*
2	7.96	-2.1	2.7	*pt 0.7*
2	9.10	-3.3	-0.4	*pt 0.8*
2	10.24	-4.5	-4.9	*pt 0.9*
2	11.38	-5.7	-10.7	*supp 3*
3	0.00	6.0	-10.7	*supp 3*
3	1.14	4.8	-4.8	*pt 0.1*
3	2.28	3.6	0.2	*pt 0.2*
3	3.41	2.3	3.5	*pt 0.3*
3	4.55	1.1	5.5	*pt 0.4*
3	5.60	0.0	6.1	*seg 1 (+)Mmax*

VQ-093
Rutlend, VT
Steel Truss: Ripley Road over Otter Creek

3	5.69	-0.1	6.1	*pt 0.5*
3	6.83	-1.3	5.3	*pt 0.6*
3	7.96	-2.5	3.1	*pt 0.7*
3	9.10	-3.7	-0.5	*pt 0.8*
3	10.24	-5.0	-5.4	*pt 0.9*
3	11.38	-6.2	-11.8	*supp 4*
4	0.00	6.1	-11.8	*supp 4*
4	1.14	4.9	-5.5	*pt 0.1*
4	2.28	3.7	-0.6	*pt 0.2*
4	3.41	2.5	2.9	*pt 0.3*
4	4.55	1.2	5.0	*pt 0.4*
4	5.69	0.0	5.7	*pt 0.5*
4	5.72	0.0	5.7	*seg 1 (+)Mmax*
4	6.83	-1.2	5.1	*pt 0.6*
4	7.98	-2.4	3.0	*pt 0.7*
4	9.10	-3.6	-0.4	*pt 0.8*
4	10.24	-4.8	-5.2	*pt 0.9*
4	11.38	-6.1	-11.4	*supp 5*
5	0.00	6.1	-11.4	*supp 5*
5	1.14	4.8	-5.2	*pt 0.1*
5	2.28	3.6	-0.4	*pt 0.2*
5	3.41	2.4	3.0	*pt 0.3*
5	4.55	1.2	5.1	*pt 0.4*
5	5.66	0.0	5.7	*seg 1 (+)Mmax*
5	5.69	0.0	5.7	*pt 0.5*
5	6.83	-1.2	5.0	*pt 0.6*
5	7.96	-2.5	2.9	*pt 0.7*
5	9.10	-3.7	-0.6	*pt 0.8*
5	10.24	-4.9	-5.5	*pt 0.9*
5	11.38	-6.1	-11.8	*supp 6*
6	0.00	6.2	-11.8	*supp 6*
6	1.14	5.0	-5.4	*pt 0.1*
6	2.28	3.7	-0.5	*pt 0.2*
6	3.41	2.5	3.1	*pt 0.3*
6	4.55	1.3	5.3	*pt 0.4*
6	5.69	0.1	6.1	*pt 0.5*
6	5.78	0.0	6.1	*seg 1 (+)Mmax*
6	6.83	-1.1	5.5	*pt 0.6*
6	7.96	-2.3	3.5	*pt 0.7*
6	9.10	-3.6	0.2	*pt 0.8*
6	10.24	-4.8	-4.6	*pt 0.9*
6	11.38	-6.0	-10.7	*supp 7*
7	0.00	5.7	-10.7	*supp 7*
7	1.14	4.5	-4.9	*pt 0.1*
7	2.28	3.3	-0.4	*pt 0.2*
7	3.41	2.1	2.7	*pt 0.3*
7	4.55	0.9	4.3	*pt 0.4*
7	5.37	0.0	4.7	*seg 1 (+)Mmax*
7	5.69	-0.3	4.6	*pt 0.5*
7	6.83	-1.6	3.6	*pt 0.6*
7	7.96	-2.8	1.1	*pt 0.7*
7	9.10	-4.0	-2.8	*pt 0.8*
7	10.24	-5.2	-8.0	*pt 0.9*
7	11.38	-6.4	-14.6	*supp 8*
8	0.00	7.4	-14.6	*supp 8*
8	1.14	6.2	-6.9	*pt 0.1*
8	2.28	4.9	-0.6	*pt 0.2*
8	3.41	3.7	4.3	*pt 0.3*
8	4.55	2.5	7.8	*pt 0.4*
8	5.69	1.3	10.0	*pt 0.5*
8	6.83	0.1	10.8	*pt 0.6*
8	6.89	0.0	10.8	*seg 1 (+)Mmax*
8	7.96	-1.1	10.1	*pt 0.7*
8	9.10	-2.4	8.1	*pt 0.8*
8	10.24	-3.6	4.8	*pt 0.9*
8	11.38	-4.8	0.0	*supp 9*

VQ-093
Rutland, VT
Steel Truss: Ripley Road over Otter Creek

Exterior Positive Moment
Strip Dead Loads

1 of 3

Analysis ID = 4 Dead Load

Loading Type: Stationary		Units				
Modulus of Elasticity (E)		Force		Length		
		All input parameters must be in consistent units. Output values are in the same units as input.		Units used to specify span L are considered master units. Master units are used for all input and output data except parameters on the right are in sub units. Specify number of sub units per one master unit in the Master/Sub field (e.g. 1000 for m/mm or 12 for ft/in).		Parameter / Master/Sub
$E = Eo \times 10^x$						I (sub⁴) 1
						E (force/sub²) 1
						Settl. (sub) 1
Eo =	1	Force Unit Name:	kip	Master Length Unit Name:	feet	Defl. (sub) 1
x =	1	Note: Force and master length unit names above have no effect on analysis and are for information only.				

	Supports									
	Supp 1	Supp 2	Supp 3	Supp 4	Supp 5	Supp 6	Supp 7	Supp 8	Supp 9	Supp 10
Type	pin	pin	pin	pin	pin	pin	pin	pin	pin	
Settlement										

		Spans								
		Span 1	Span 2	Span 3	Span 4	Span 5	Span 6	Span 7	Span 8	Span 9
Segment 1	L	11.375	11.375	11.375	11.375	11.375	11.375	11.375	11.375	
	I	1	1	1	1	1	1	1	1	
Segment 2	L									
	I									
Segment 3	L									
	I									
Segment 4	L									
	I									
Segment 5	L									
	I									
Segment 6	L									
	I									
Segment 7	L									
	I									
Segment 8	L									
	I									
Segment 9	L									
	I									
Segment 10	L									
	I									
Segment 11	L									
	I									
Segment 12	L									
	I									
Segment 13	L									
	I									
	Span L =	11.375	11.375	11.375	11.375	11.375	11.375	11.375	11.375	0

	Distributed Loads									
	Loading 1	Loading 2	Loading 3	Loading 4	Loading 5	Loading 6	Loading 7	Loading 8	Loading 9	Loading 10
x	0									
L	91									
w1	0.89									
w2	0.89									

		P-Loads								
		Span 1	Span 2	Span 3	Span 4	Span 5	Span 6	Span 7	Span 8	Span 9
Loading 1	x									
	P									
Loading 2	x									
	P									
Loading 3	x									

VQ-093
Rutland, VT
Stael Truss: Ripley Road over Otter Creek

Loading 3	P									
Loading 4	x									
	P									
Loading 5	x									
	P									
Loading 6	x									
	P									
Loading 7	x									
	P									
Loading 8	x									
	P									
Loading 9	x									
	P									
Loading 10	x									
	P									

		M-Loads								
		Span 1	Span 2	Span 3	Span 4	Span 5	Span 6	Span 7	Span 8	Span 9
Loading 1	x									
	M									
Loading 2	x									
	M									
Loading 3	x									
	M									
Loading 4	x									
	M									
Loading 5	x									
	M									

Support Reactions & Rotations

	Sup 1	Sup 2	Sup 3	Sup 4	Sup 5	Sup 6	Sup 7	Sup 8	Sup 9
Mom R	n/a	n/a	n/a	n/a	n/a	n/a	n/a	n/a	n/a
Vert R	4.0	11.5	9.8	10.2	10.1	10.2	9.8	11.5	4.0
Rotation	-3.15101	0.84402	-0.22507	0.05627	0.00000	-0.05627	0.22507	-0.84402	3.15101

Moments and Shears

Span	X	Shear	Moment	
1	0.00	4.0	0.0	*supp 1*
1	1.14	3.0	4.0	*pt 0.1*
1	2.28	2.0	6.8	*pt 0.2*
1	3.41	1.0	8.4	*pt 0.3*
1	4.49	0.0	9.0	*seg 1 (+)Mmax*
1	4.55	-0.1	9.0	*pt 0.4*
1	5.69	-1.1	8.3	*pt 0.5*
1	6.83	-2.1	6.5	*pt 0.6*
1	7.96	-3.1	3.6	*pt 0.7*
1	9.10	-4.1	-0.5	*pt 0.8*
1	10.24	-5.1	-5.8	*pt 0.9*
1	11.38	-6.1	-12.2	*supp 2*
2	0.00	5.3	-12.2	*supp 2*
2	1.14	4.3	-6.7	*pt 0.1*
2	2.28	3.3	-2.3	*pt 0.2*
2	3.41	2.3	0.9	*pt 0.3*
2	4.55	1.3	3.0	*pt 0.4*
2	5.69	0.3	3.9	*pt 0.5*
2	6.01	0.0	3.9	*seg 1 (+)Mmax*
2	6.83	-0.7	3.6	*pt 0.6*
2	7.96	-1.7	2.2	*pt 0.7*
2	9.10	-2.8	-0.3	*pt 0.8*
2	10.24	-3.8	-4.0	*pt 0.9*
2	11.38	-4.8	-8.9	*supp 3*
3	0.00	5.0	-8.9	*supp 3*
3	1.14	4.0	-3.8	*pt 0.1*
3	2.28	3.0	0.1	*pt 0.2*
3	3.41	1.9	2.9	*pt 0.3*
3	4.55	0.9	4.6	*pt 0.4*
3	5.60	0.0	5.0	*seg 1 (+)Mmax*

VQ-093
Rutland, VT
Steel Truss: Ripley Road over Otter Creek

3	5.69	-0.1	5.0	*pt 0.5*
3	6.83	-1.1	4.4	*pt 0.6*
3	7.96	-2.1	2.6	*pt 0.7*
3	9.10	-3.1	-0.4	*pt 0.8*
3	10.24	-4.1	-4.5	*pt 0.9*
3	11.38	-5.1	-9.8	*supp 4*
4	0.00	5.1	-9.8	*supp 4*
4	1.14	4.1	-4.6	*pt 0.1*
4	2.28	3.1	-0.5	*pt 0.2*
4	3.41	2.1	2.4	*pt 0.3*
4	4.55	1.0	4.1	*pt 0.4*
4	5.69	0.0	4.7	*pt 0.5*
4	5.72	0.0	4.7	*seg 1 (+)Mmax*
4	6.83	-1.0	4.2	*pt 0.6*
4	7.96	-2.0	2.5	*pt 0.7*
4	9.10	-3.0	-0.3	*pt 0.8*
4	10.24	-4.0	-4.3	*pt 0.9*
4	11.38	-5.0	-9.5	*supp 5*
5	0.00	5.0	-9.5	*supp 5*
5	1.14	4.0	-4.3	*pt 0.1*
5	2.28	3.0	-0.3	*pt 0.2*
5	3.41	2.0	2.5	*pt 0.3*
5	4.55	1.0	4.2	*pt 0.4*
5	5.66	0.0	4.7	*seg 1 (+)Mmax*
5	5.89	0.0	4.7	*pt 0.5*
5	6.83	-1.0	4.1	*pt 0.6*
5	7.96	-2.1	2.4	*pt 0.7*
5	9.10	-3.1	-0.5	*pt 0.8*
5	10.24	-4.1	-4.6	*pt 0.9*
5	11.38	-5.1	-9.8	*supp 6*
6	0.00	5.1	-9.8	*supp 6*
6	1.14	4.1	-4.5	*pt 0.1*
6	2.28	3.1	-0.4	*pt 0.2*
6	3.41	2.1	2.6	*pt 0.3*
6	4.55	1.1	4.4	*pt 0.4*
6	5.69	0.1	5.0	*pt 0.5*
6	5.78	0.0	5.0	*seg 1 (+)Mmax*
6	6.83	-0.9	4.6	*pt 0.6*
6	7.96	-1.9	2.9	*pt 0.7*
6	9.10	-3.0	0.1	*pt 0.8*
6	10.24	-4.0	-3.8	*pt 0.9*
6	11.38	-5.0	-8.9	*supp 7*
7	0.00	4.8	-8.9	*supp 7*
7	1.14	3.8	-4.0	*pt 0.1*
7	2.28	2.8	-0.3	*pt 0.2*
7	3.41	1.7	2.2	*pt 0.3*
7	4.55	0.7	3.6	*pt 0.4*
7	5.37	0.0	3.9	*seg 1 (+)Mmax*
7	5.69	-0.3	3.9	*pt 0.5*
7	6.83	-1.3	3.0	*pt 0.6*
7	7.98	-2.3	0.9	*pt 0.7*
7	9.10	-3.3	-2.3	*pt 0.8*
7	10.24	-4.3	-6.7	*pt 0.9*
7	11.38	-5.3	-12.2	*supp 8*
8	0.00	6.1	-12.2	*supp 8*
8	1.14	5.1	-5.8	*pt 0.1*
8	2.28	4.1	-0.5	*pt 0.2*
8	3.41	3.1	3.6	*pt 0.3*
8	4.55	2.1	6.5	*pt 0.4*
8	5.69	1.1	8.3	*pt 0.5*
8	6.83	0.1	9.0	*pt 0.6*
8	8.89	0.0	9.0	*seg 1 (+)Mmax*
8	7.96	-1.0	8.4	*pt 0.7*
8	9.10	-2.0	6.8	*pt 0.8*
8	10.24	-3.0	4.0	*pt 0.9*
8	11.38	-4.0	0.0	*supp 9*

VQ-093
Rutland, VT
Steel Truss: Ripley Road over Otter Creek

Exterior Negative Moment 1 of 3
Strip Dead Loads

Analysis ID = 4 Dead Load

Loading Type: Stationary		Units			
Modulus of Elasticity (E)		Force	Length		
		All input parameters must be in consistent units. Output values are in the same units as input.	Units used to specify span L are considered master units. Master units are used for all input and output data except parameters on the right are in sub units. Specify number of sub units per one master unit in the Master/Sub field (e.g. 1000 for m/mm or 12 for ft/in).	Parameter	Master/Sub
				I (sub^4)	1
				E (force/sub^2)	1
				Sett. (sub)	1
Eo =	1	Force Unit Name: kip	Master Length Unit Name: feet	Defl. (sub)	1
$E = Eo \times 10^x$					
x =	1	Note: Force and master length unit names above have no effect on analysis and are for information only			

	Supports									
	Supp 1	Supp 2	Supp 3	Supp 4	Supp 5	Supp 6	Supp 7	Supp 8	Supp 9	Supp 10
Type	pin	pin	pin	pin	pin	pin	pin	pin	pin	
Settlement										

		Spans								
		Span 1	Span 2	Span 3	Span 4	Span 5	Span 6	Span 7	Span 8	Span 9
Segment 1	L	11.375	11.375	11.375	11.375	11.375	11.375	11.375	11.375	
	I	1	1	1	1	1	1	1	1	
Segment 2	L									
	I									
Segment 3	L									
	I									
Segment 4	L									
	I									
Segment 5	L									
	I									
Segment 6	L									
	I									
Segment 7	L									
	I									
Segment 8	L									
	I									
Segment 9	L									
	I									
Segment 10	L									
	I									
Segment 11	L									
	I									
Segment 12	L									
	I									
Segment 13	L									
	I									
Span L =		11.375	11.375	11.375	11.375	11.375	11.375	11.375	11.375	0

	Distributed Loads									
	Loading 1	Loading 2	Loading 3	Loading 4	Loading 5	Loading 6	Loading 7	Loading 8	Loading 9	Loading 10
x	0									
L	91									
w1	0.77									
w2	0.77									

		P-Loads								
		Span 1	Span 2	Span 3	Span 4	Span 5	Span 6	Span 7	Span 8	Span 9
Loading 1	x									
	P									
Loading 2	x									
	P									
Loading 3	x									

Loading 3	P									
Loading 4	x									
	P									
Loading 5	x									
	P									
Loading 6	x									
	P									
Loading 7	x									
	P									
Loading 8	x									
	P									
Loading 9	x									
	P									
Loading 10	x									
	P									

		M-Loads								
		Span 1	Span 2	Span 3	Span 4	Span 5	Span 6	Span 7	Span 8	Span 9
Loading 1	x									
	M									
Loading 2	x									
	M									
Loading 3	x									
	M									
Loading 4	x									
	M									
Loading 5	x									
	M									

Support Reactions & Rotations

	Sup 1	Sup 2	Sup 3	Sup 4	Sup 5	Sup 6	Sup 7	Sup 8	Sup 9
Mom R	n/a	n/a	n/a	n/a	n/a	n/a	n/a	n/a	n/a
Vert R	3.5	9.9	8.4	8.8	8.7	8.8	8.4	9.9	3.5
Rotation	-2.72615	0.73022	-0.19473	0.04868	0.00000	-0.04868	0.19473	-0.73022	2.72615

Moments and Shears

Span	X	Shear	Moment	
1	0.00	3.5	0.0	*supp 1*
1	1.14	2.6	3.4	*pt 0.1*
1	2.28	1.7	5.9	*pt 0.2*
1	3.41	0.8	7.3	*pt 0.3*
1	4.49	0.0	7.7	*seg 1 (+)Mmax*
1	4.55	0.0	7.7	*pt 0.4*
1	5.69	-0.9	7.2	*pt 0.5*
1	6.83	-1.8	5.6	*pt 0.6*
1	7.96	-2.7	3.1	*pt 0.7*
1	9.10	-3.6	-0.5	*pt 0.8*
1	10.24	-4.4	-5.0	*pt 0.9*
1	11.38	-5.3	-10.5	*supp 2*
2	0.00	4.6	-10.5	*supp 2*
2	1.14	3.8	-5.8	*pt 0.1*
2	2.28	2.9	-2.0	*pt 0.2*
2	3.41	2.0	0.8	*pt 0.3*
2	4.55	1.1	2.6	*pt 0.4*
2	5.69	0.2	3.3	*pt 0.5*
2	6.01	0.0	3.4	*seg 1 (+)Mmax*
2	6.83	-0.6	3.1	*pt 0.6*
2	7.96	-1.5	1.9	*pt 0.7*
2	9.10	-2.4	-0.3	*pt 0.8*
2	10.24	-3.3	-3.5	*pt 0.9*
2	11.38	-4.1	-7.7	*supp 3*
3	0.00	4.3	-7.7	*supp 3*
3	1.14	3.4	-3.3	*pt 0.1*
3	2.28	2.6	0.1	*pt 0.2*
3	3.41	1.7	2.5	*pt 0.3*
3	4.55	0.8	3.9	*pt 0.4*
3	5.60	0.0	4.4	*seg 1 (+)Mmax*

VQ-093
Rutland, VT
Steel Truss: Ripley Road over Otter Creek

3	5.69	-0.1	4.4	*pt 0.5*
3	6.83	-0.9	3.8	*pt 0.6*
3	7.96	-1.8	2.2	*pt 0.7*
3	9.10	-2.7	-0.3	*pt 0.8*
3	10.24	-3.6	-3.9	*pt 0.9*
3	11.38	-4.4	-8.5	*supp 4*
4	0.00	4.4	-8.5	*supp 4*
4	1.14	3.5	-4.0	*pt 0.1*
4	2.28	2.7	-0.5	*pt 0.2*
4	3.41	1.8	2.1	*pt 0.3*
4	4.55	0.9	3.6	*pt 0.4*
4	5.69	0.0	4.1	*pt 0.5*
4	5.72	0.0	4.1	*seg 1 (+)Mmax*
4	6.83	-0.9	3.6	*pt 0.6*
4	7.96	-1.7	2.2	*pt 0.7*
4	9.10	-2.6	-0.3	*pt 0.8*
4	10.24	-3.5	-3.8	*pt 0.9*
4	11.38	-4.4	-8.2	*supp 5*
5	0.00	4.4	-8.2	*supp 5*
5	1.14	3.5	-3.8	*pt 0.1*
5	2.28	2.6	-0.3	*pt 0.2*
5	3.41	1.7	2.2	*pt 0.3*
5	4.55	0.9	3.6	*pt 0.4*
5	5.66	0.0	4.1	*seg 1 (+)Mmax*
5	5.69	0.0	4.1	*pt 0.5*
5	6.83	-0.9	3.6	*pt 0.6*
5	7.96	-1.8	2.1	*pt 0.7*
5	9.10	-2.7	-0.5	*pt 0.8*
5	10.24	-3.5	-4.0	*pt 0.9*
5	11.38	-4.4	-8.5	*supp 6*
6	0.00	4.4	-8.5	*supp 6*
6	1.14	3.6	-3.9	*pt 0.1*
6	2.28	2.7	-0.3	*pt 0.2*
6	3.41	1.8	2.2	*pt 0.3*
6	4.55	0.9	3.8	*pt 0.4*
6	5.69	0.1	4.4	*pt 0.5*
6	5.78	0.0	4.4	*seg 1 (+)Mmax*
6	6.83	-0.8	3.9	*pt 0.6*
6	7.96	-1.7	2.5	*pt 0.7*
6	9.10	-2.6	0.1	*pt 0.8*
6	10.24	-3.4	-3.3	*pt 0.9*
6	11.38	-4.3	-7.7	*supp 7*
7	0.00	4.1	-7.7	*supp 7*
7	1.14	3.3	-3.5	*pt 0.1*
7	2.28	2.4	-0.3	*pt 0.2*
7	3.41	1.5	1.9	*pt 0.3*
7	4.55	0.6	3.1	*pt 0.4*
7	5.37	0.0	3.4	*seg 1 (+)Mmax*
7	5.69	-0.2	3.3	*pt 0.5*
7	6.83	-1.1	2.6	*pt 0.6*
7	7.96	-2.0	0.8	*pt 0.7*
7	9.10	-2.9	-2.0	*pt 0.8*
7	10.24	-3.8	-5.8	*pt 0.9*
7	11.38	-4.6	-10.5	*supp 8*
8	0.00	5.3	-10.5	*supp 8*
8	1.14	4.4	-5.0	*pt 0.1*
8	2.28	3.6	-0.5	*pt 0.2*
8	3.41	2.7	3.1	*pt 0.3*
8	4.55	1.8	5.6	*pt 0.4*
8	5.69	0.9	7.2	*pt 0.5*
8	6.83	0.0	7.7	*pt 0.6*
8	6.89	0.0	7.7	*seg 1 (+)Mmax*
8	7.96	-0.8	7.3	*pt 0.7*
8	9.10	-1.7	5.9	*pt 0.8*
8	10.24	-2.6	3.4	*pt 0.9*
8	11.38	-3.5	0.0	*supp 9*

FST

PROJECT Rutland, VT

SUBJECT Steel Truss

Ripley Road over Otter Creek

PROJECT NUMBER 10-093

SHEET NUMBER 50

DATE 10/27/11

COMPUTED BY MAB

CHECKED BY TD

HL-93 Live Load Moments + Impact

	Max Moment	Min Moment
Interior Strip	111.0 ft·k	-81.7 ft·k
Exterior Strip	52.2 ft·k	-36.0 ft·k

Dead Load Moments

	Max Moment	Min Moment
Interior Strip	13.3 ft·k	-14.6 ft·k
Exterior Strip	9.0 ft·k	-10.5 ft·k

Strength I Moments (1.75(LL+I) + 1.25(DC))

	Max Moment	Min Moment
Interior Strip	210.9 ft·k	-161.2 ft·k
Exterior Strip	102.6 ft·k	-76.1 ft·k

FST

PROJECT Rutland, VT

SUBJECT Steel Truss
Ripley Road over Otter Creek

PROJECT NUMBER VQ-093
SHEET NUMBER 51
DATE 10/28/14
COMPUTED BY MAB
CHECKED BY TD

Factored Strength I Moments per foot of Slab width

	Positive Moment	Negative moment
Interior Strip	25.0 ft·k/ft	-23.6 ft·k
Exterior Strip	24.3 ft·k/ft	-22.2 ft·k/ft

The interior strips Control the design

FST

PROJECT Rutland, VT

SUBJECT Steel Truss
Ripley Road over Otter Creek

PROJECT NUMBER VQ-093
SHEET NUMBER 54
DATE 10/28/14
COMPUTED BY MAB
CHECKED BY TD

Check LRFD 5.7.3.3.2

$$M_{cr} = \gamma_3 \left[(\gamma_1 f_r + \gamma_2 f_{cpe}) S_c - M_{dnc} \left(\frac{S_c}{S_{nc}} - 1 \right) \right]$$

$f_{cpe} = 0$

$$S_c = S_{nc} = \frac{\frac{1}{12}(12\,in)(10\,in)^3}{(10\,in/2)} = 200\,in^3$$

$f_r = 0.24\sqrt{f'_c} = (0.24)(2)\,ksi = 0.48\,ksi$

$\gamma_1 = 1.6$

$\gamma_3 = 0.67$

$$M_{cr} = (0.67)(1.6)(0.48\,ksi)(200\,in^3)(1\,ft/12\,in) = 8.7\,ft{\cdot}k \text{ per ft.}$$

23.6 ft·k per foot > 8.7 ft·k

Design for 1.0 M_u

FST

PROJECT Rutland, VT

SUBJECT Steel Truss

Ripley Road over Otter Creek

PROJECT NUMBER 1Q-093

SHEET NUMBER 1

DATE 2/3/15

COMPUTED BY MAB

CHECKED BY TD

Positive Moment Requirements

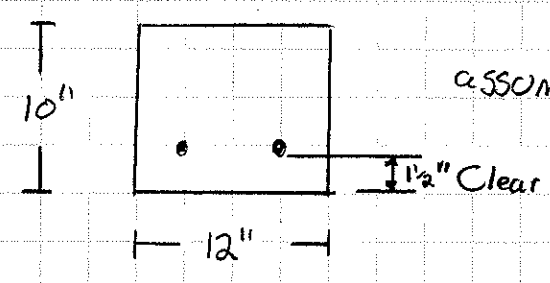

assume #6's for dimensions to start

$$d = 10in - 1\tfrac{1}{2}in - \tfrac{3}{8}in = 8.13in$$

$$R_n = \frac{M_n}{b\,d^2} \qquad \rho = \frac{0.85 f'_c}{f_y}\left(1 - \sqrt{1 - \frac{2 R_n}{0.85 f'_c}}\right)$$

$f'_c = 4ksi$

$f_y = 60\ ksi$

$M_n = 25.0\ ft{\cdot}k$

$\phi = 0.9$

$b = 12in$

$$R_n/\phi = \frac{(25ft{\cdot}k)(12in/ft)}{(12in)(0.9)(8.13in)^2} = 0.42$$

$$\rho = \frac{A_s req'd}{bd} = \frac{(0.85)(4ksi)}{60ksi}\left(1 - \sqrt{1 - \frac{(2)(0.42)}{(0.85)(4ksi)}}\right)$$

$$\rho = 0.0075$$

A_s req'd = $(0.0075)(12_{in})(8.13_{in}) = 0.73\ in^2$

6's @ 6in provides $0.88 in^2$.

Use # 6's @ 6"

Check Max Spacing. Per AASHTO LRFD 5.7.3.4-1

$$s \le \frac{700\,\gamma_e}{\beta_s\, f_{ss}} - 2d_c$$

take $\gamma_e = 0.75$ to provide a small crack width.

$$\beta_s = 1 + \frac{d_c}{0.7(h-d_c)}$$

$h = 10_{in}$

$d_c = 1.5_{in} + 3/8_{in} = 1.88_{in}$

$$\beta_s = 1 + \frac{1.88}{(0.7)(10_{in} - 1.88_{in})} = 1.33$$

f_{ss} is the tensile stress in the reinforcing at the service limit state.

Ripley Road over Otter Creek

f_{ss}:

Service Moment (on a 1ft Strip) $= \dfrac{11\,ft\cdot k + 13.3\,ft\cdot K}{101.1\,in \cdot 1ft/12in} = 14.75\,ft\cdot k$

$A_s = 0.88\,in^2$

Find the internal moment arm (ima):

$T = A_s f_y$ = Tension at failure $= (0.88\,in^2)(60\,ksi) = 52.8\,k$

$ima = d - a/2$

$a/2 = \dfrac{52.8k \div [0.85 \cdot 4ksi \cdot 12\,in]}{2} = 0.65\,in$

$ima = 8.13\,in - 0.65\,in = 7.48\,in$

T_s = Tension in the steel @ Service $= M \div ima = \dfrac{(14.75\,ft\cdot k)(12in/ft)}{7.48\,in}$

$T_s = 23.7\,K$

$f_{ss} = 23.7\,K \div 0.88\,in^2 = T_s/A_s = 26.9\,ksi$

$S \le \dfrac{(700)(0.75)}{(1.33)(26.9)} - (2)(1.88\,in) = 10.9\,in$

$6\,in < 10.9\,in \therefore$ 6 in Spacing is OK

The following Page is a spreadsheet that does the same calculation for future use.

FST

PROJECT: Rutland, VT

SUBJECT: Steel T Truss
Ripley Road over Otter Creek

PROJECT NUMBER: VQ-093
SHEET NUMBER: 4
DATE: 2/13/13
COMPUTED BY: MAB
CHECKED BY: TD

AASHTO LRFD 6th Edition S.7.3.4-1

$s \leq [700\Upsilon_e/\beta_s f_{ss}]-2dc$

$\beta_s = 1+ [d_c/0.7*(h-d_c)]$

INPUT	
h =	10.0 in
d_c =	1.9 in
Υ_e =	0.7S
f'c =	4.0 ksi
fy =	60.0 ksi
A_s =	0.88 si
Service Moment =	14.8 ft-k
Width Considered =	12.0 in

OUTPUT	
d =	8.1 in
β_s =	1.33
Internal Moment Arm =	7.S in
Service Tension =	23.7 k
fss =	26.9 ksi

RESULT	
Maximum Spacing =	10.9 in

FST

PROJECT Rutland, VT

PROJECT NUMBER VQ-093

SHEET NUMBER 5

DATE 2/3/15

COMPUTED BY MAB

CHECKED BY TD

SUBJECT Steel Truss

Ripley Road over Otter Creek

Negative Moment Reinforcing

$M_n = 23.6\ ft \cdot k$

$d = 10_{in} - 2.5_{in} - 3/8_{in} = 7.13_{in}$ $\qquad d_c = 2.88_{in}$

$$\frac{R_n}{\phi} = \frac{(23.6\ ft \cdot k)(12_{in}/ft)}{(0.9)(12_{in})(7.13_{in})^2} = 0.516$$

$$\rho = \frac{(0.85)(4ksi)}{60ksi}\left(1 - \sqrt{1 - \frac{(2)(0.516)}{(0.85)(4)}}\right) = 0.0094$$

$$A_s\ req'd = (0.0094)(12_{in})(7.13_{in}) = 0.80\ in^2$$

Use #6's @ 6"

Check max spacing.

Service Moment =

$$\frac{-81.7\ ft \cdot k + -14.6\ ft \cdot k}{82.1\ in \cdot 1ft/12in} = 14.1\ ft \cdot k$$

FST

PROJECT Rutland, VT

SUBJECT Steel Truss
Ripley Road over Otter Creek

PROJECT NUMBER VQ-043
SHEET NUMBER 6
DATE 2/3/15
COMPUTED BY MAB
CHECKED BY TD

Negative Moment max Spacing with 6's @ 6"

AASHTO LRFD 6th Edition 5.7.3.4-1

$s \leq [700\Upsilon_e/\beta_s f_{ss}]-2dc$

$\beta_s = 1+ [d_c/0.7*(h-d_c)]$

INPUT	
h =	10.0 in
d_c =	2.9 in
Υ_e =	0.75
f'c =	4.0 ksi
fy =	60.0 ksi
A_s =	0.88 si
Service Moment =	14.1 ft-k
Width Considered =	12.0 in

OUTPUT	
d =	7.1 in
β_s =	1.58
Internal Moment Arm =	6.5 in
Service Tension =	26.1 k
fss =	29.7 ksi

RESULT	
Maximum Spacing =	5.4 in

< 6.0 i

∴ N.G.

FST

PROJECT Rutland, VT

SUBJECT Steel Truss
Ripley Road Over Otter Creek

PROJECT NUMBER VQ-093
SHEET NUMBER 7
DATE 2/3/15
COMPUTED BY MAB
CHECKED BY TD

Negative moment, 7's @ 6"

AA5HTO LRFD 6th Edition 5.7.3.4-1

$s \leq [700\Upsilon_e/\beta_s f_{ss}]-2dc$

$\beta_s = 1+ [d_c/0.7*(h-d_c)]$

INPUT	
h =	10.0 in
d_c =	2.9 in
Υ_e =	0.75
f'c =	4.0 ksi
fy =	60.0 ksi
A_s =	1.20 si
5ervice Moment =	14.1 ft-k
Width Considered =	12.0 in

OUTPUT	
d =	7.1 in
β_s =	1.59
Internal Moment Arm =	6.2 in
Service Tension =	27.4 k
fss =	22.8 ksi

RESULT	
Maximum 5pacing =	8.6 in

> 6" ok

Use # 7's @ 6"

FST

PROJECT Rutland, VT

SUBJECT Steel Truss
Ripley Road over Otter Creek

PROJECT NUMBER VO-093
SHEET NUMBER 56
DATE 10/28/14
COMPUTED BY MAB
CHECKED BY TD

Secondary Reinforcing.

LRFD 9.7.3.2

Secondary reinforcing shall be $100/\sqrt{S}$ % Primary A_s positive
but need not be more than 0.5 Primary A_s positive

$$100/\sqrt{S} = 100/\sqrt{11.375} = 29.65\%$$

Primary $A_s = (2)(0.44 in^2) = 0.88 in^2$

$(0.2965)(0.88 in^2 \text{ per ft}) = 0.26 in^2$ per foot

$\boxed{\#5\text{'s @ } 12'' \text{ top + Bottom} = 0.31 in^2 \text{ per foot.}}$

Minimum.

Fatigue Considerations.

Positive Moment Cracked Section Properties:

Look at 1ft.

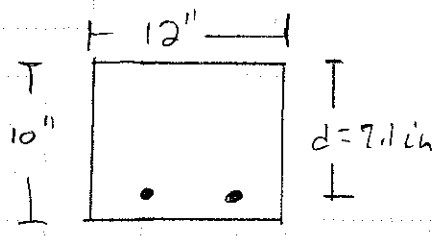

2#6 bars
$A_s = (0.88 in^2)$

$d = 10in - 1.5in - 5/8in - 0.356in - 3/8in = 7.144in$

$\rho = A_s/bd = 0.88 \div ((10)(7.144)) = 0.0123$

$k = c/d$ where c = depth to neutral axis from compression face.

$$k = -\rho n + \sqrt{(\rho n)^2 + 2\rho n}$$

$n = E_s/E_c$ $E_s = 29,000$ ksi

take $E_c = 33,000\ K_1\ w_c^{1.5}\sqrt{f'_c}$

with $K_1 = 1.0$

$f'_c = 4$ ksi

$w_c = 0.145$ kcf per LRFD table 3.5.1-1

$E_c = (33,000)(1.0)(0.145)^{1.5}(2)$ ksi $= 3644$ ksi

$n = 29{,}000 \div 3644 = 7.96$

n is rounded to the nearest whole number

use $n = 8$

$$K = (-0.0123)(8) + \sqrt{((0.0123)(8))^2 + (2)(0.0123)(8)}$$

$K = 0.356$

$c = (0.356)(7.144\,in) = 2.54\,in$

CRACKED SECTION:
(Positive Moment)

$A_t = A_s \cdot n$ = transformed Steel Area

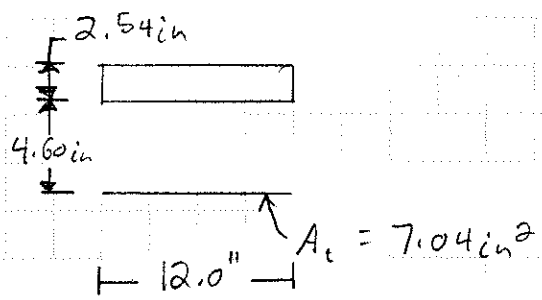

$$I_{cr} = (1/12)(12\,in)(2.54\,in)^3 + (2.54\,in)^2(1/2)(12\,in) + (7.04\,in^2)(4.6\,in)^2$$

$I_{cr} = 204.1\ in^4$

$S_{cr\ concrete}$ = cracked concrete section modulus $= 204.1\,in^4 / 2.54\,in$

$S_{cr\ concrete} = 80.3\ in^3$

$S_{cr\ steel} = 204.1\,in^4 / 4.6\,in = 44.4\ in^3$

FST

PROJECT Rutland, VT

SUBJECT Steel Truss
Ripley Road over Otter Creek

PROJECT NUMBER VQ-093
SHEET NUMBER 59
DATE 10/28/14
COMPUTED BY MAB
CHECKED BY TD

CRACKED SECTION PROPERTIES :
NEGATIVE MOMENT SECTION (per ft.)

2 #7 Bars $A_s = 1.2 in^2$

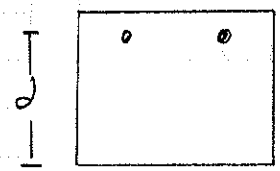

$d = 10in - 3in - 5/8in - 0.356in - 7/16in = 5.58 in$

$\rho = 1.2 in^2 \div (12in \cdot 5.58in) = 0.0179$

$K = -(0.0179)(8) + \sqrt{(0.0179 \cdot 8)^2 + (2)(0.0179)(8)}$

$K = 0.41$

$c = (0.41)(5.58in) = 2.3 in$

$A_t = (1.2in^2)(8) = 9.6 in^2$

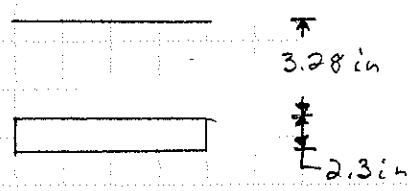

$I_{cr} = (1/12)(12in)(2.3in)^2 + (2.3in)^2(1/2)(12in) + (9.6in^2)(3.28in)^2$

$I_{cr} = 147.2 in^4$

S_{cr} Concrete $= 147.2 in^4 / 2.3 in = 64.0 in^3$

S_{cr} Steel $= 147.2 in^4 / 3.28 in = 44.9 in^3$

VQ-093
Rutland, VT
Steel Truss Bridga Deck Fatigue Loading

Analysis ID = 4

Loading Type: Live Load		Units				
Modulus of Elasticity (E)		Force		Length		
		All input parameters must be in consistent units. Output values are in the same units as input.		Units used to specify span L are considered master units. Master units are used for all input and output data except parameters on the right are in sub units. Specify number of sub units per one master unit in the Master/Sub field (e.g. 1000 for m/mm or 12 for ft/in).	Parameter	Master/Sub
					J (sub^4)	1
					E (force/sub^2)	1
$E = Eo \times 10^x$					Sett. (sub)	1
Eo =	1	Force Unit Name:	kip	Master Length Unit Name: feet	Defl. (sub)	1
x =	1	Note: Force and master length unit names above have no effect on analysis and are for information only				

	Supports									
	Supp 1	Supp 2	Supp 3	Supp 4	Supp 5	Supp 6	Supp 7	Supp 8	Supp 9	Supp 10
Type	pin	pin	pin	pin	pin	pin	pin	pin	pin	

		Spans								
		Span 1	Span 2	Span 3	Span 4	Span 5	Span 6	Span 7	Span 8	Span 9
Segment 1	L	11.375	11.375	11.375	11.375	11.375	11.375	11.375	11.375	
	I	1	1	1	1	1	1	1	1	
Segment 2	L									
	I									
Segment 3	L									
	I									
Segment 4	L									
	I									
Segment 5	L									
	I									
Segment 6	L									
	I									
Segment 7	L									
	I									
Segment 8	L									
	I									
Segment 9	L									
	I									
Segment 10	L									
	I									
Segment 11	L									
	I									
Segment 12	L									
	I									
Segment 13	L									
	I									
	Span L =	11.375	11.375	11.375	11.375	11.375	11.375	11.375	11.375	0

Live Load --> Lane (UDL) combined with Truck or Tandem

Use lane combined with truck or tandem, whichever produca maximum adverse force effact

Lana Loading:

UDL =	0.01

Truck Loading:

Laad axle P1 =	8
axla P2 =	32
axle P3 =	32
P1/P2 Spa =	14
P2/P3 Spa =	vary 30 to 30

Tandam Loading:

axla P =	0.1
axla Spa =	4

VQ-093
Rutlend, VT
Steal Truss Bridga Deck Fatigue Loading

In addition to lane combined with single truck/tandam, calculate momants in (-)M ragions and max reactions at intermediata supports due to lane combined with two trucks placed in critical locations in adjacent to intermediata support spans. The following applies:

2-Trucks:

Constant P2/P3 Spa =	14
Min spa between 2nd trk lead/1st trk rear axles =	50
[Lana+Double Trk] Raduct Factor (except react) =	0.9
[Lane+DoubleTrk] Reaction Raduct Factor =	0.9

Load Multipliers:

Lane m =	1
Truck/Tandem m =	1.15

Specified Option: Neglect axles that reduce advarse force affects

Note:
Live Load is based on HL-93 (AASHTO LRFD) loading

Max LL Vertical Reactions & Corresponding Rotations

	----Max Raactions----		----Min Reactions----	
Support	max R	Rotation	min R	Rotation
1	37.42	-1.2650	-2.91	6.2837
2	38.23	4.4371	-4.68	3.3675
3	37.93	0.6937	-10.73	-0.6011
4	38.29	0.0557	-9.92	-0.0055
5	37.95	-0.6750	-9.87	0.0307
6	38.29	-0.0557	-9.92	0.0055
7	37.93	-0.6937	-10.73	0.6011
8	38.23	-4.4371	-4.68	-3.3675
9	37.42	1.2650	-2.91	-6.2837

Max LL Rotations & Corresponding Vertical Reactions

	----Pos Rotations----		----Neg Rotations----	
Support	(+)Rot	Raact	(-)Rot	React
1	6.2837	-2.91	-23.4511	19.67
2	14.2701	29.93	-12.5674	26.28
3	11.9408	27.79	-11.7938	27.53
4	11.7851	27.54	-11.7381	27.62
5	11.7866	27.50	-11.7866	27.50
6	11.7381	27.62	-11.7851	27.54
7	11.7938	27.53	-11.9408	27.79
8	12.5674	26.28	-14.2701	29.93
9	23.4511	19.67	-6.2837	-2.91

Max LL Shears & Corresponding Moments

		----Pos Shaars---		----Nag Shears----		
Span	X	(+)V	M	(-)V	M	
1	0.00	37.4	0.0	-2.9	0.0	*supp 1*
1	1.14	32.6	37.1	-5.4	35.7	*pt 0.1*
1	2.28	27.8	63.3	-10.0	61.0	*pt 0.2*
1	3.41	23.2	79.1	-14.4	76.5	*pt 0.3*
1	4.55	18.8	85.5	-18.6	83.0	*pt 0.4*
1	5.69	14.7	83.8	-22.5	81.4	*pt 0.5*
1	6.83	11.0	74.8	-26.1	73.0	*pt 0.6*
1	7.98	7.5	60.0	-29.5	58.2	*pt 0.7*
1	9.10	4.6	41.5	-32.5	39.2	*pt 0.8*
1	10.24	2.1	21.6	-35.1	18.4	*pt 0.9*
1	11.38	0.8	8.9	-37.0	-1.9	*supp 2*
2	0.00	37.6	-1.9	-3.9	8.9	*supp 2*
2	1.14	34.6	21.7	-4.6	10.0	*pt 0.1*
2	2.28	30.9	42.8	-7.3	42.9	*pt 0.2*
2	3.41	27.0	57.9	-11.1	58.0	*pt 0.3*
2	4.55	23.0	66.9	-15.1	67.5	*pt 0.4*
2	5.69	18.9	69.8	-19.2	70.6	*pt 0.5*
2	6.83	14.9	66.3	-23.3	66.9	*pt 0.6*
2	7.96	10.9	56.5	-27.4	56.1	*pt 0.7*
2	9.10	7.2	41.5	-31.2	39.4	*pt 0.8*
2	10.24	5.7	13.5	-34.4	19.2	*pt 0.9*
2	11.38	5.7	20.0	-37.1	-2.0	*supp 3*

3	0.00	37.8	-2.0	-5.1	20.0	*supp 3*
3	1.14	34.7	20.6	-5.1	14.2	*pt 0.1*
3	2.28	31.1	41.4	-7.1	41.6	*pt 0.2*
3	3.41	27.2	57.0	-10.8	56.7	*pt 0.3*
3	4.55	23.1	66.5	-14.8	66.4	*pt 0.4*
3	5.69	19.0	69.8	-19.0	69.8	*pt 0.5*
3	6.83	14.8	66.3	-23.1	66.5	*pt 0.6*
3	7.96	10.8	56.8	-27.3	57.0	*pt 0.7*
3	9.10	7.1	41.5	-31.3	41.2	*pt 0.8*
3	10.24	5.0	13.0	-35.0	20.2	*pt 0.9*
3	11.38	5.0	18.7	-37.9	-2.7	*supp 4*
4	0.00	37.6	-2.0	-5.0	18.7	*supp 4*
4	1.14	34.7	20.5	-5.0	13.0	*pt 0.1*
4	2.28	31.1	39.0	-7.1	41.5	*pt 0.2*
4	3.41	27.3	55.6	-10.8	56.6	*pt 0.3*
4	4.55	23.1	66.5	-14.8	66.3	*pt 0.4*
4	5.69	19.0	69.8	-19.0	69.8	*pt 0.5*
4	6.83	14.8	66.3	-23.1	66.5	*pt 0.6*
4	7.96	10.8	56.6	-27.2	55.9	*pt 0.7*
4	9.10	7.1	41.5	-31.1	41.3	*pt 0.8*
4	10.24	5.0	12.9	-34.7	20.5	*pt 0.9*
4	11.38	5.0	18.6	-37.7	-2.1	*supp 5*
5	0.00	37.7	-2.0	-5.0	18.6	*supp 5*
5	1.14	34.7	20.5	-5.0	12.9	*pt 0.1*
5	2.28	31.1	41.3	-7.1	41.5	*pt 0.2*
5	3.41	27.2	55.9	-10.8	56.6	*pt 0.3*
5	4.55	23.1	66.5	-14.8	66.3	*pt 0.4*
5	5.69	19.0	69.8	-19.0	69.8	*pt 0.5*
5	6.83	14.8	66.3	-23.1	66.5	*pt 0.6*
5	7.96	10.8	56.6	-27.3	55.6	*pt 0.7*
5	9.10	7.1	41.5	-31.1	39.0	*pt 0.8*
5	10.24	5.0	13.0	-34.7	20.5	*pt 0.9*
5	11.38	5.0	18.7	-37.6	-2.0	*supp 6*
6	0.00	37.9	-2.7	-5.0	18.7	*supp 6*
6	1.14	35.0	20.2	-5.0	13.0	*pt 0.1*
6	2.28	31.3	41.2	-7.1	41.5	*pt 0.2*
6	3.41	27.3	57.0	-10.8	56.6	*pt 0.3*
6	4.55	23.1	66.5	-14.8	66.3	*pt 0.4*
6	5.69	19.0	69.8	-19.0	69.8	*pt 0.5*
6	6.83	14.8	66.4	-23.1	66.5	*pt 0.6*
6	7.96	10.8	56.7	-27.1	57.0	*pt 0.7*
6	9.10	7.1	41.6	-31.1	41.4	*pt 0.8*
8	10.24	5.1	14.2	-34.7	20.6	*pt 0.9*
6	11.38	5.1	20.0	-37.6	-2.0	*supp 7*
7	0.00	37.1	-2.0	-5.7	20.0	*supp 7*
7	1.14	34.4	19.2	-5.7	13.5	*pt 0.1*
7	2.28	31.2	39.4	-7.2	41.5	*pt 0.2*
7	3.41	27.4	56.1	-10.9	56.5	*pt 0.3*
7	4.55	23.3	66.9	-14.9	66.3	*pt 0.4*
7	5.69	19.2	70.6	-18.9	69.8	*pt 0.5*
7	6.83	15.1	67.5	-23.0	66.9	*pt 0.6*
7	7.96	11.1	58.0	-27.0	57.9	*pt 0.7*
7	9.10	7.3	42.9	-30.9	42.8	*pt 0.8*
7	10.24	4.6	10.0	-34.6	21.7	*pt 0.9*
7	11.38	3.9	8.9	-37.6	-1.9	*supp 8*
8	0.00	37.0	-1.9	-0.8	8.9	*supp 8*
8	1.14	35.1	18.4	-2.1	21.6	*pt 0.1*
8	2.28	32.5	39.2	-4.6	41.5	*pt 0.2*
8	3.41	29.5	58.2	-7.5	60.0	*pt 0.3*
8	4.55	26.1	73.0	-11.0	74.8	*pt 0.4*
8	5.69	22.5	81.4	-14.7	83.8	*pt 0.5*
8	6.83	18.6	83.0	-18.8	85.5	*pt 0.6*
8	7.96	14.4	78.5	-23.2	79.1	*pt 0.7*
8	9.10	10.0	61.0	-27.8	63.3	*pt 0.8*
8	10.24	5.4	35.7	-32.6	37.1	*pt 0.9*
8	11.38	2.9	0.0	-37.4	0.0	*supp 9*

Max LL Moments & Corresponding Shears

		----Pos Moments----		----Neg Moments----		
Span	X	(+)M	V	(-)M	V	
1	0.00	0.0	0.0	0.0	0.0	*supp 1*

VQ-093
Rutland, VT
Steel Truss Bridge Deck Fatigue Loading

1	1.14	37.1	32.6	-3.3	-2.9	*pt 0.1*
1	2.28	63.3	27.8	-6.6	-2.9	*pt 0.2*
1	3.41	79.2	23.2	-9.9	-2.9	*pt 0.3*
1	4.55	85.6	18.8	-13.3	-2.9	*pt 0.4*
1	5.69	83.8	-22.1	-16.6	-2.9	*pt 0.5*
1	6.83	74.8	-25.9	-19.9	-2.9	*pt 0.6*
1	7.96	60.1	-29.3	-23.2	-2.9	*pt 0.7*
1	9.10	41.5	-32.3	-26.8	-4.7	*pt 0.8*
1	10.24	21.6	-34.7	-32.2	-5.2	*pt 0.9*
1	11.38	8.9	0.8	-46.8	-23.7	*supp 2*
2	0.00	8.9	-3.9	-46.8	6.7	*supp 2*
2	1.14	23.5	33.0	-39.3	6.5	*pt 0.1*
2	2.28	42.9	29.6	-32.3	5.7	*pt 0.2*
2	3.41	59.2	26.8	-26.9	4.7	*pt 0.3*
2	4.55	69.3	22.5	-21.5	4.7	*pt 0.4*
2	5.69	72.5	-18.6	-16.1	4.7	*pt 0.5*
2	6.83	68.5	-22.9	-17.8	-3.9	*pt 0.6*
2	7.96	57.8	-27.1	-22.2	-3.9	*pt 0.7*
2	9.10	41.7	-30.8	-26.7	-5.1	*pt 0.8*
2	10.24	22.8	-33.0	-34.7	-11.1	*pt 0.9*
2	11.38	20.3	5.6	-49.6	-15.0	*supp 3*
3	0.00	20.3	-5.1	-39.3	5.6	*supp 3*
3	1.14	22.8	33.9	-33.0	5.4	*pt 0.1*
3	2.28	41.8	30.7	-27.1	5.0	*pt 0.2*
3	3.41	57.8	27.0	-22.5	4.0	*pt 0.3*
3	4.55	68.1	22.7	-18.0	4.0	*pt 0.4*
3	5.69	71.7	-18.4	-13.5	4.0	*pt 0.5*
3	6.83	68.1	-22.7	-17.6	-4.0	*pt 0.6*
3	7.96	57.8	-27.1	-22.1	-4.0	*pt 0.7*
3	9.10	41.7	-30.7	-26.8	-5.1	*pt 0.8*
3	10.24	22.6	-33.9	-32.6	-5.3	*pt 0.9*
3	11.38	18.8	5.0	-38.8	-21.9	*supp 4*
4	0.00	18.8	-5.0	-38.8	5.5	*supp 4*
4	1.14	22.8	33.9	-32.6	5.3	*pt 0.1*
4	2.28	41.7	30.7	-26.8	5.0	*pt 0.2*
4	3.41	57.7	27.0	-22.2	3.9	*pt 0.3*
4	4.55	68.0	22.8	-17.8	3.9	*pt 0.4*
4	5.69	71.7	18.4	-13.4	-3.9	*pt 0.5*
4	8.83	68.1	-22.7	-17.8	-3.9	*pt 0.6*
4	7.96	57.7	-27.0	-22.2	-3.9	*pt 0.7*
4	9.10	41.7	-30.7	-26.8	-5.0	*pt 0.8*
4	10.24	22.6	-33.9	-32.6	-5.3	*pt 0.9*
4	11.38	18.7	4.9	-38.8	-5.5	*supp 5*
5	0.00	18.7	-5.0	-38.8	21.9	*supp 5*
5	1.14	22.6	33.9	-32.6	5.3	*pt 0.1*
5	2.28	41.7	30.7	-26.8	5.0	*pt 0.2*
5	3.41	57.7	27.0	-22.2	3.9	*pt 0.3*
5	4.55	68.1	22.7	-17.8	3.9	*pt 0.4*
5	5.69	71.7	-18.4	-13.4	3.9	*pt 0.5*
5	6.83	68.0	-22.8	-17.8	-3.9	*pt 0.6*
5	7.96	57.7	-27.0	-22.2	-3.9	*pt 0.7*
5	9.10	41.7	-30.7	-26.8	-5.0	*pt 0.8*
5	10.24	22.6	-33.9	-32.6	-5.3	*pt 0.9*
5	11.38	18.8	5.0	-38.8	-5.5	*supp 6*
6	0.00	18.8	-5.0	-38.8	21.9	*supp 6*
6	1.14	22.6	33.9	-32.6	5.3	*pt 0.1*
6	2.28	41.7	30.7	-26.8	5.1	*pt 0.2*
6	3.41	57.8	27.1	-22.1	4.0	*pt 0.3*
6	4.55	68.1	22.7	-17.8	4.0	*pt 0.4*
6	5.69	71.7	18.4	-13.5	-4.0	*pt 0.5*
6	8.83	68.1	-22.7	-18.0	-4.0	*pt 0.6*
6	7.96	57.8	-27.0	-22.5	-4.0	*pt 0.7*
6	9.10	41.8	-30.7	-27.1	-5.0	*pt 0.8*
6	10.24	22.8	-33.9	-33.0	-5.4	*pt 0.9*
6	11.38	20.3	5.1	-39.3	-5.8	*supp 7*
7	0.00	20.3	-5.6	-39.3	22.2	*supp 7*
7	1.14	22.8	33.0	-32.6	5.3	*pt 0.1*
7	2.28	41.7	30.8	-26.7	5.1	*pt 0.2*
7	3.41	57.8	27.1	-22.2	3.9	*pt 0.3*
7	4.55	68.5	22.9	-17.8	3.9	*pt 0.4*
7	5.69	72.5	18.6	-16.1	-4.7	*pt 0.5*

7	6.83	69.3	-22.5	-21.5	-4.7	*pt 0.6*
7	7.96	59.2	-26.8	-26.9	-4.7	*pt 0.7*
7	9.10	42.9	-30.9	-32.3	-4.8	*pt 0.8*
7	10.24	23.5	-33.0	-39.3	-6.5	*pt 0.9*
7	11.38	8.9	3.9	-46.8	-6.7	*supp 8*
8	0.00	8.9	-0.8	-46.8	23.7	*supp 8*
8	1.14	21.6	34.7	-32.2	5.2	*pt 0.1*
8	2.28	41.5	32.3	-26.6	4.7	*pt 0.2*
8	3.41	60.1	29.3	-23.2	2.9	*pt 0.3*
8	4.55	74.8	25.9	-19.9	2.9	*pt 0.4*
8	5.69	83.8	22.1	-16.6	2.9	*pt 0.5*
8	6.83	85.6	-18.8	-13.3	2.9	*pt 0.6*
8	7.96	79.2	-23.2	-9.9	2.9	*pt 0.7*
8	9.10	63.3	-27.8	-6.6	2.9	*pt 0.8*
8	10.24	37.1	-32.6	-3.3	2.9	*pt 0.9*
8	11.38	0.0	0.0	0.0	0.0	*supp 9*

Max LL Reactions - Critical Case Dearipiton

Support	(+)Reactions	(-)Reactions
1	*UDL spans: 1, 3, 5, 7; -->Trk lead [var s = 30] @ 44.0*	*UDL spans: 2, 4, 8, 8; -->Trk lead [var s = 30] @ 59.7*
2	*UDL spans: 1, 2, 4, 8, 8; -->Trk lead [var s = 30] @ 54.5*	*UDL spans: 3, 5, 7; -->Trk lead [var s = 30] @ 71.1*
3	*UDL spans: 2, 3, 5, 7; -->Trk lead [var s = 30] @ 66.5*	*UDL spans: 1, 4, 6, 8; <--Trk rear [var s = 30] @ 37.8*
4	*UDL spans: 1, 3, 4, 6, 8; -->Trk lead [var s = 30] @ 48.3*	*UDL spans: 2, 5, 7; <--Trk rear [var s = 30] @ 49.2*
5	*UDL spans: 2, 4, 5, 7; <--Trk rear [var s = 30] @ 45.7*	*UDL spans: 1, 3, 6, 8; <--Trk rear [var s = 30] @ 80.8*
6	*UDL spans: 1, 3, 5, 8, 8; <--Trk rear [ver s = 30] @ 86.7*	*UDL spans: 2, 4, 7; -->Trk lead [var s = 30] @ 85.8*
7	*UDL spans: 2, 4, 8, 7; <--Trk rear [var s = 30] @ 68.5*	*UDL spans: 1, 3, 5, 8; -->Trk lead [var s = 30] @ 97.4*
8	*UDL spans: 1, 3, 5, 7, 8; <--Trk rear [var s = 30] @ 80.5*	*UDL spans: 2, 4, 6; <--Trk rear [var s = 30] @ 63.9*
9	*UDL spans: 2, 4, 8, 8; -->Trk lead [var s = 30] @ 105.0*	*UDL spans: 1, 3, 5, 7; <--Trk rear [var s = 30] @ 75.3*

Max LL Rotations - Critical Case Desription

Support	(+)Rotations	(-)Rotations
1	*UDL spans: 2, 4, 6, 8; -->Trk lead [var s = 30] @ 59.7*	*UDL spans: 1, 3, 5, 7; -->Trk lead [var s = 30] @ 48.3*
2	*UDL spans: 1, 3, 5, 7; -->Trk lead [var s = 30] @ 50.6*	*UDL spans: 2, 4, 6, 8; -->Trk lead [var s = 30] @ 59.7*
3	*UDL spans: 2, 4, 8, 8; -->Trk lead [var s = 30] @ 62.4*	*UDL spans: 1, 3, 5, 7; -->Trk lead [var s = 30] @ 71.1*
4	*UDL spans: 1, 3, 5, 7; -->Trk lead [var s = 30] @ 73.8*	*UDL spans: 2, 4, 6, 8; -->Trk lead [var s = 30] @ 82.4*
5	*UDL spans: 2, 4, 6, 8; -->Trk lead [var s = 30] @ 85.2*	*UDL spans: 1, 3, 5, 7; <--Trk rear [var s = 30] @ 48.8*
6	*UDL spans: 1, 3, 5, 7; <--Trk rear [var s = 30] @ 52.6*	*UDL spans: 2, 4, 6, 8; <--Trk rear [ver s = 30] @ 61.2*
7	*UDL spans: 2, 4, 6, 8; <--Trk rear [var s = 30] @ 63.9*	*UDL spans: 1, 3, 5, 7; <--Trk rear [var s = 30] @ 72.6*
8	*UDL spans: 1, 3, 5, 7; <--Trk rear [var s = 30] @ 75.3*	*UDL spans: 2, 4, 6, 8; <--Trk rear [var s = 30] @ 84.4*
9	*UDL spans: 2, 4, 6, 8; <--Trk rear [var s = 30] @ 88.7*	*UDL spans: 1, 3, 5, 7; <--Trk rear [var s = 30] @ 75.3*

Max LL Shears - Critical Case Desription

Span	X	(+)Shears	(-)Shears
1	0.00	*UDL spans: 1, 3, 5, 7; -->Trk lead [var s = 30] @ 44.0*	*UDL spans: 2, 4, 6, 8; -->Trk lead [var s = 30] @ 59.7*
1	1.14	*UDL spans: 1 (Rt L = 10.2), 3, 5, 7; -->Trk lead [var s = 30] @ 45.1*	*UDL spans: 1 (Lt L = 1.1), 2, 4, 6, 8; -->Trk lead [var s = 30] @ 15.1*
1	2.28	*UDL spans: 1 (Rt L = 9.1), 3, 5, 7; -->Trk lead [var s = 30] @ 48.3*	*UDL spans: 1 (Lt L = 2.3), 2, 4, 6, 8; -->Trk lead [var s = 30] @ 18.3*
1	3.41	*UDL spans: 1 (Rt L = 8.0), 3, 5, 7; -->Trk lead [var s = 30] @ 47.4*	*UDL spans: 1 (Lt L = 3.4), 2, 4, 6, 8; -->Trk lead [var s = 30] @ 17.4*
1	4.55	*UDL spans: 1 (Rt L = 6.8), 3, 5, 7; -->Trk lead [var s = 30] @ 48.6*	*UDL spans: 1 (Lt L = 4.6), 2, 4, 6, 8; -->Trk lead [var s = 30] @ 18.5*
1	5.69	*UDL spans: 1 (Rt L = 5.7), 3, 5, 7; -->Trk lead [var s = 30] @ 49.7*	*UDL spans: 1 (Lt L = 5.7), 2, 4, 8, 8; -->Trk lead [var s = 30] @ 19.7*
1	6.83	*UDL spans: 1 (Rt L = 4.6), 3, 5, 7; -->Trk lead [var s = 30] @ 50.8*	*UDL spans: 1 (Lt L = 8.8), 2, 4, 6, 8; -->Trk lead [var s = 30] @ 20.8*
1	7.96	*UDL spans: 1 (Rt L = 3.4), 3, 5, 7; -->Trk lead [var s = 30] @ 52.0*	*UDL spans: 1 (Lt L = 8.0), 2, 4, 6, 8; -->Trk lead [var s = 30] @ 52.0*
1	9.10	*UDL spans: 1 (Rt L = 2.3), 3, 5, 7; -->Trk lead [var s = 30] @ 23.1*	*UDL spans: 1 (Lt L = 9.1), 2, 4, 6, 8; -->Trk lead [var s = 30] @ 53.1*
1	10.24	*UDL spans: 1 (Rt L = 1.1), 3, 5, 7; -->Trk lead [var s = 30] @ 24.2*	*UDL spans: 1 (Lt L = 10.2), 2, 4, 6, 8; -->Trk lead [var s = 30] @ 54.2*
1	11.38	*UDL spans: 3, 5, 7; -->Trk lead [var s = 30] @ 71.1*	*UDL spans: 1, 2, 4, 6, 8; -->Trk lead [var s = 30] @ 55.4*
2	0.00	*UDL spans: 1, 2, 4, 8, 8; -->Trk lead [var s = 30] @ 55.4*	*UDL spans: 3, 5, 7; -->Trk lead [var s = 30] @ 71.1*
2	1.14	*UDL spans: 1, 2 (Rt L = 10.2), 4, 6, 8; -->Trk lead [var s = 30] @ 56.*	*UDL spans: 2 (Lt L = 1.1), 3, 5, 7; <--Trk rear [var s = 30] @ 56.5*
2	2.28	*UDL spans: 1, 2 (Rt L = 9.1), 4, 6, 8; -->Trk lead [var s = 30] @ 57.7*	*UDL spans: 2 (Lt L = 2.3), 3, 5, 7; -->Trk lead [var s = 30] @ 27.6*
2	3.41	*UDL spans: 1, 2 (Rt L = 8.0), 4, 8, 8; <--Trk rear [var s = 30] @ 44.8*	*UDL spans: 2 (Lt L = 3.4), 3, 5, 7; -->Trk lead [var s = 30] @ 28.8*
2	4.55	*UDL spans: 1, 2 (Rt L = 6.8), 4, 6, 8; <--Trk rear [var s = 30] @ 45.9*	*UDL spans: 2 (Lt L = 4.6), 3, 5, 7; -->Trk lead [var s = 30] @ 29.9*
2	5.69	*UDL spans: 1, 2 (Rt L = 5.7), 4, 6, 8; <--Trk rear [var s = 30] @ 47.1*	*UDL spans: 2 (Lt L = 5.7), 3, 5, 7; -->Trk lead [var s = 30] @ 31.1*
2	6.83	*UDL spans: 1, 2 (Rt L = 4.6), 4, 6, 8; <--Trk rear [var s = 30] @ 48.2*	*UDL spans: 2 (Lt L = 6.8), 3, 5, 7; -->Trk lead [var s = 30] @ 32.2*
2	7.96	*UDL spans: 1, 2 (Rt L = 3.4), 4, 6, 8; <--Trk rear [var s = 30] @ 49.3*	*UDL spans: 2 (Lt L = 8.0), 3, 5, 7; -->Trk lead [var s = 30] @ 63.3*
2	9.10	*UDL spans: 1, 2 (Rt L = 2.3), 4, 6, 8; <--Trk rear [var s = 30] @ 50.5*	*UDL spans: 2 (Lt L = 9.1), 3, 5, 7; -->Trk lead [var s = 30] @ 64.5*
2	10.24	*UDL spans: 1, 2 (Rt L = 1.1), 4, 6, 8; <--Trk rear [var s = 30] @ 36.9*	*UDL spans: 2 (Lt L = 10.2), 3, 5, 7; -->Trk lead [var s = 30] @ 65.6*
2	11.38	*UDL spans: 1, 4, 6, 8; <--Trk rear [var s = 30] @ 38.9*	*UDL spans: 2, 3, 5, 7; -->Trk lead [var s = 30] @ 66.7*
3	0.00	*UDL spans: 2, 3, 5, 7; -->Trk lead [var s = 30] @ 66.8*	*UDL spans: 1, 4, 8, 8; -->Trk lead [var s = 30] @ 52.1*
3	1.14	*UDL spans: 2, 3 (Rt L = 10.2), 5, 7; -->Trk lead [var s = 30] @ 67.9*	*UDL spans: 1, 3 (Lt L = 1.1), 4, 6, 8; -->Trk lead [var s = 30] @ 52.1*
3	2.28	*UDL spans: 2, 3 (Rt L = 9.1), 5, 7; -->Trk lead [var s = 30] @ 69.0*	*UDL spans: 1, 3 (Lt L = 2.3), 4, 6, 8; -->Trk lead [var s = 30] @ 39.0*
3	3.41	*UDL spans: 2, 3 (Rt L = 8.0), 5, 7; <--Trk rear [var s = 30] @ 56.2*	*UDL spans: 1, 3 (Lt L = 3.4), 4, 6, 8; -->Trk lead [var s = 30] @ 40.2*
3	4.55	*UDL spans: 2, 3 (Rt L = 6.8), 5, 7; <--Trk rear [var s = 30] @ 57.3*	*UDL spans: 1, 3 (Lt L = 4.8), 4, 6, 8; -->Trk lead [var s = 30] @ 41.3*
3	5.69	*UDL spans: 2, 3 (Rt L = 5.7), 5, 7; <--Trk rear [var s = 30] @ 58.4*	*UDL spans: 1, 3 (Lt L = 5.7), 4, 6, 8; -->Trk lead [var s = 30] @ 42.4*

3	6.83	UDL spans: 2, 3 (Rt L = 4.6), 5, 7; <--Trk rear [var s = 30] @ 59.8	UDL spans: 1, 3 (Lt L = 6.8), 4, 6, 8; -->Trk lead [var s = 30] @ 43.6
3	7.96	UDL spans: 2, 3 (Rt L = 3.4), 5, 7; <--Trk rear [var s = 30] @ 60.7	UDL spans: 1, 3 (Lt L = 8.0), 4, 6, 8; -->Trk lead [var s = 30] @ 44.7
3	9.10	UDL spans: 2, 3 (Rt L = 2.3), 5, 7; <--Trk rear [var s = 30] @ 61.9	UDL spans: 1, 3 (Lt L = 9.1), 4, 6, 8; -->Trk lead [var s = 30] @ 45.8
3	10.24	UDL spans: 2, 3 (Rt L = 1.1), 5, 7; <--Trk rear [var s = 30] @ 48.7	UDL spans: 1, 3 (Lt L = 10.2), 4, 6, 8; -->Trk laad [var s = 30] @ 47.0
3	11.38	UDL spans: 2, 5, 7; <--Trk rear [var s = 30] @ 48.7	UDL spans: 1, 3, 4, 6, 8; -->Trk lead [var s = 30] @ 48.1
4	0.00	UDL spans: 1, 3, 4, 6, 8; -->Trk lead [var s = 30] @ 78.1	UDL spans: 2, 5, 7; -->Trk lead [var s = 30] @ 63.5
4	1.14	UDL spans: 1, 3, 4 (Rt L = 10.2), 6, 8; -->Trk lead [var s = 30] @ 79.:	UDL spans: 2, 4 (Lt L = 1.1), 5, 7; -->Trk lead [var s = 30] @ 63.5
4	2.28	UDL spans: 1, 3, 4 (Rt L = 9.1), 6, 8; -->Trk lead [var s = 30] @ 50.4	UDL spans: 2, 4 (Lt L = 2.3), 5, 7; -->Trk lead [var s = 30] @ 50.4
4	3.41	UDL spans: 1, 3, 4 (Rt L = 8.0), 8, 8; -->Trk lead [var s = 30] @ 51.5	UDL spans: 2, 4 (Lt L = 3.4), 5, 7; -->Trk lead [var s = 30] @ 51.5
4	4.55	UDL spans: 1, 3, 4 (Rt L = 8.8), 6, 8; <--Trk rear [var s = 30] @ 68.7	UDL spans: 2, 4 (Lt L = 4.6), 5, 7; -->Trk lead [var s = 30] @ 52.7
4	5.69	UDL spans: 1, 3, 4 (Rt L = 5.7), 8, 8; <--Trk rear [var s = 30] @ 69.8	UDL spans: 2, 4 (Lt L = 5.7), 5, 7; -->Trk lead [var s = 30] @ 53.8
4	6.83	UDL spans: 1, 3, 4 (Rt L = 4.6), 6, 8; <--Trk rear [var s = 30] @ 71.0	UDL spans: 2, 4 (Lt L = 6.8), 5, 7; -->Trk lead [var s = 30] @ 54.9
4	7.96	UDL spans: 1, 3, 4 (Rt L = 3.4), 6, 8; <--Trk rear [var s = 30] @ 72.1	UDL spans: 2, 4 (Lt L = 8.0), 5, 7; -->Trk lead [var s = 30] @ 86.1
4	9.10	UDL spans: 1, 3, 4 (Rt L = 2.3), 6, 8; <--Trk rear [var s = 30] @ 73.2	UDL spans: 2, 4 (Lt L = 9.1), 5, 7; -->Trk lead [var s = 30] @ 57.2
4	10.24	UDL spans: 1, 3, 4 (Rt L = 1.1), 8, 8; <--Trk rear [var s = 30] @ 60.1	UDL spans: 2, 4 (Lt L = 10.2), 5, 7; -->Trk lead [var s = 30] @ 58.4
4	11.38	UDL spans: 1, 3, 8, 8; <--Trk rear [var s = 30] @ 60.1	UDL spans: 2, 4, 5, 7; -->Trk lead [var s = 30] @ 59.5
5	0.00	UDL spans: 2, 4, 5, 7; -->Trk lead [var s = 30] @ 89.5	UDL spans: 1, 3, 8, 8; -->Trk lead [var s = 30] @ 74.9
5	1.14	UDL spans: 2, 4, 5 (Rt L = 10.2), 7; -->Trk lead [var s = 30] @ 90.8	UDL spans: 1, 3, 5 (Lt L = 1.1), 6, 8; -->Trk lead [var s = 30] @ 74.9
5	2.28	UDL spans: 2, 4, 5 (Rt L = 9.1), 7; -->Trk lead [var s = 30] @ 91.8	UDL spans: 1, 3, 5 (Lt L = 2.3), 8, 8; -->Trk lead [var s = 30] @ 61.8
5	3.41	UDL spans: 2, 4, 5 (Rt L = 8.0), 7; -->Trk lead [var s = 30] @ 62.9	UDL spans: 1, 3, 5 (Lt L = 3.4), 6, 8; -->Trk lead [var s = 30] @ 62.9
5	4.55	UDL spans: 2, 4, 5 (Rt L = 6.8), 7; <--Trk raar [var s = 30] @ 80.1	UDL spans: 1, 3, 5 (Lt L = 4.8), 6, 8; -->Trk lead [var s = 30] @ 64.0
5	5.69	UDL spans: 2, 4, 5 (Rt L = 5.7), 7; <--Trk rear [var s = 30] @ 81.2	UDL spans: 1, 3, 5 (Lt L = 5.7), 8, 8; -->Trk lead [var s = 30] @ 65.2
5	6.83	UDL spans: 2, 4, 5 (Rt L = 4.6), 7; <--Trk rear [var s = 30] @ 82.3	UDL spans: 1, 3, 5 (Lt L = 8.8), 8, 8; -->Trk lead [var s = 30] @ 66.3
5	7.96	UDL spans: 2, 4, 5 (Rt L = 3.4), 7; <--Trk rear [var s = 30] @ 83.5	UDL spans: 1, 3, 5 (Lt L = 8.0), 6, 8; -->Trk lead [var s = 30] @ 97.5
5	9.10	UDL spans: 2, 4, 5 (Rt L = 2.3), 7; <--Trk rear [var s = 30] @ 84.6	UDL spans: 1, 3, 5 (Lt L = 9.1), 6, 8; -->Trk lead [var s = 30] @ 98.8
5	10.24	UDL spans: 2, 4, 5 (Rt L = 1.1), 7; <--Trk rear [var s = 30] @ 71.5	UDL spans: 1, 3, 5 (Lt L = 10.2), 6, 8; -->Trk lead [var s = 30] @ 89.7
5	11.38	UDL spans: 2, 4, 7; <--Trk rear [var s = 30] @ 71.5	UDL spans: 1, 3, 5, 6, 8; -->Trk lead [var s = 30] @ 70.9
6	0.00	UDL spans: 1, 3, 5, 6, 8; -->Trk laad [var s = 30] @ 100.9	UDL spans: 2, 4, 7; -->Trk laad [var s = 30] @ 88.3
6	1.14	UDL spans: 1, 3, 5, 6 (Rt L = 10.2), 8; -->Trk lead [var s = 30] @ 102	UDL spans: 2, 4, 6 (Lt L = 1.1), 7; -->Trk lead [var s = 30] @ 86.3
6	2.28	UDL spans: 1, 3, 5, 8 (Rt L = 9.1), 8; -->Trk lead [var s = 30] @ 103.:	UDL spans: 2, 4, 6 (Lt L = 2.3), 7; -->Trk laad [var s = 30] @ 73.1
6	3.41	UDL spans: 1, 3, 5, 8 (Rt L = 8.0), 8; <--Trk rear [var s = 30] @ 90.3	UDL spans: 2, 4, 6 (Lt L = 3.4), 7; -->Trk lead [var s = 30] @ 74.3
6	4.55	UDL spans: 1, 3, 5, 6 (Rt L = 6.8), 8; <--Trk rear [var s = 30] @ 91.4	UDL spans: 2, 4, 6 (Lt L = 4.6), 7; -->Trk lead [var s = 30] @ 75.4
6	5.89	UDL spans: 1, 3, 5, 8 (Rt L = 5.7), 8; <--Trk rear [var s = 30] @ 92.6	UDL spans: 2, 4, 6 (Lt L = 5.7), 7; -->Trk lead [var s = 30] @ 76.6
8	6.83	UDL spans: 1, 3, 5, 6 (Rt L = 4.8), 8; <--Trk rear [var s = 30] @ 93.7	UDL spans: 2, 4, 8 (Lt L = 6.8), 7; -->Trk lead [var s = 30] @ 77.7
6	7.96	UDL spans: 1, 3, 5, 6 (Rt L = 3.4), 8; <--Trk rear [var s = 30] @ 94.8	UDL spans: 2, 4, 6 (Lt L = 8.0), 7; -->Trk lead [var s = 30] @ 78.8
6	9.10	UDL spans: 1, 3, 5, 6 (Rt L = 2.3), 8; <--Trk rear [var s = 30] @ 98.0	UDL spans: 2, 4, 6 (Lt L = 9.1), 7; <--Trk rear [var s = 30] @ 66.0
8	10.24	UDL spans: 1, 3, 5, 6 (Rt L = 1.1), 8; <--Trk rear [var s = 30] @ 82.9	UDL spans: 2, 4, 6 (Lt L = 10.2), 7; -->Trk laad [var s = 30] @ 81.1
6	11.38	UDL spans: 1, 3, 5, 8; <--Trk rear [var s = 30] @ 82.9	UDL spans: 2, 4, 8, 7; -->Trk laad [var s = 30] @ 82.2
7	0.00	UDL spans: 2, 4, 6, 7; -->Trk lead [var s = 30] @ 82.3	UDL spans: 1, 3, 5, 8; -->Trk lead [var s = 30] @ 98.1
7	1.14	UDL spans: 2, 4, 6, 7 (Rt L = 10.2); -->Trk laad [var s = 30] @ 83.4	UDL spans: 1, 3, 5, 7 (Lt L = 1.1), 8; -->Trk laad [var s = 30] @ 98.1
7	2.28	UDL spans: 2, 4, 6, 7 (Rt L = 9.1); -->Trk laad [var s = 30] @ 84.5	UDL spans: 1, 3, 5, 7 (Lt L = 2.3), 8; -->Trk laad [var s = 30] @ 84.5
7	3.41	UDL spans: 2, 4, 6, 7 (Rt L = 8.0); -->Trk lead [var s = 30] @ 85.7	UDL spans: 1, 3, 5, 7 (Lt L = 3.4), 8; -->Trk lead [var s = 30] @ 85.7
7	4.55	UDL spans: 2, 4, 8, 7 (Rt L = 6.8); <--Trk raar [var s = 30] @ 102.8	UDL spans: 1, 3, 5, 7 (Lt L = 4.6), 8; -->Trk lead [var s = 30] @ 86.8
7	5.69	UDL spans: 2, 4, 8, 7 (Rt L = 5.7); <--Trk rear [var s = 30] @ 103.9	UDL spans: 1, 3, 5, 7 (Lt L = 5.7), 8; -->Trk lead [var s = 30] @ 87.9
7	6.83	UDL spans: 2, 4, 6, 7 (Rt L = 4.6); <--Trk rear [var s = 30] @ 105.1	UDL spans: 1, 3, 5, 7 (Lt L = 8.8), 8; -->Trk lead [var s = 30] @ 89.1
7	7.96	UDL spans: 2, 4, 6, 7 (Rt L = 3.4); <--Trk rear [var s = 30] @ 106.2	UDL spans: 1, 3, 5, 7 (Lt L = 8.0), 8; -->Trk lead [var s = 30] @ 90.2
7	9.10	UDL spans: 2, 4, 6, 7 (Rt L = 2.3); <--Trk rear [var s = 30] @ 107.4	UDL spans: 1, 3, 5, 7 (Lt L = 9.1), 8; <--Trk rear [var s = 30] @ 77.3
7	10.24	UDL spans: 2, 4, 6, 7 (Rt L = 1.1); -->Trk lead [var s = 30] @ 78.5	UDL spans: 1, 3, 5, 7 (Lt L = 10.2), 8; -->Trk lead [var s = 30] @ 92.5
7	11.38	UDL spans: 2, 4, 6; <--Trk rear [var s = 30] @ 63.9	UDL spans: 1, 3, 5, 7, 8; -->Trk lead [var s = 30] @ 93.6
8	0.00	UDL spans: 1, 3, 5, 7, 8; -->Trk laad [var s = 30] @ 93.6	UDL spans: 2, 4, 6; <--Trk rear [var s = 30] @ 83.9
8	1.14	UDL spans: 1, 3, 5, 7, 8 (Rt L = 10.2); -->Trk laad [var s = 30] @ 94.:	UDL spans: 2, 4, 6, 8 (Lt L = 1.1); <--Trk rear [var s = 30] @ 110.8
8	2.28	UDL spans: 1, 3, 5, 7, 8 (Rt L = 9.1); -->Trk lead [var s = 30] @ 95.9	UDL spans: 2, 4, 6, 8 (Lt L = 2.3); <--Trk rear [var s = 30] @ 111.9
8	3.41	UDL spans: 1, 3, 5, 7, 8 (Rt L = 8.0); -->Trk laad [var s = 30] @ 97.0	UDL spans: 2, 4, 6, 8 (Lt L = 3.4); <--Trk rear [var s = 30] @ 83.0
8	4.55	UDL spans: 1, 3, 5, 7, 8 (Rt L = 6.8); <--Trk rear [var s = 30] @ 114.:	UDL spans: 2, 4, 6, 8 (Lt L = 4.6); <--Trk rear [var s = 30] @ 84.2
8	5.89	UDL spans: 1, 3, 5, 7, 8 (Rt L = 5.7); <--Trk rear [var s = 30] @ 115.:	UDL spans: 2, 4, 6, 8 (Lt L = 5.7); <--Trk rear [var s = 30] @ 85.3
8	6.83	UDL spans: 1, 3, 5, 7, 8 (Rt L = 4.6); <--Trk rear [var s = 30] @ 116.:	UDL spans: 2, 4, 8, 8 (Lt L = 6.8); <--Trk rear [var s = 30] @ 88.4
8	7.98	UDL spans: 1, 3, 5, 7, 8 (Rt L = 3.4); <--Trk rear [var s = 30] @ 117.:	UDL spans: 2, 4, 6, 8 (Lt L = 8.0); <--Trk rear [var s = 30] @ 87.8
8	9.10	UDL spans: 1, 3, 5, 7, 8 (Rt L = 2.3); <--Trk rear [var s = 30] @ 118.:	UDL spans: 2, 4, 6, 8 (Lt L = 9.1); <--Trk rear [var s = 30] @ 88.7
8	10.24	UDL spans: 1, 3, 5, 7, 8 (Rt L = 1.1); <--Trk rear [var s = 30] @ 119.:	UDL spans: 2, 4, 6, 8 (Lt L = 10.2); -->Trk lead [var s = 30] @ 103.9
8	11.38	UDL spans: 1, 3, 5, 7; <--Trk rear [var s = 30] @ 75.3	UDL spans: 2, 4, 8, 8; -->Trk lead [var s = 30] @ 105.0

Max LL Momants - Critical Case Desription

Span	X	(+)Moments	(-)Moments
1	0.00	N/A	N/A
1	1.14	UDL spans: 1, 3, 5, 7; -->Trk lead [var s = 30] @ 45.1	UDL spans: 2, 4, 8, 8; -->Trk lead [var s = 30] @ 59.7
1	2.28	UDL spans: 1, 3, 5, 7; -->Trk lead [var s = 30] @ 48.3	UDL spans: 2, 4, 6, 8; -->Trk lead [var s = 30] @ 59.7
1	3.41	UDL spans: 1, 3, 5, 7; -->Trk lead [var s = 30] @ 47.4	UDL spans: 2, 4, 6, 8; -->Trk lead [var s = 30] @ 59.7
1	4.55	UDL spans: 1, 3, 5, 7; -->Trk lead [var s = 30] @ 48.6	UDL spans: 2, 4, 6, 8; -->Trk lead [var s = 30] @ 59.7
1	5.69	UDL spans: 1, 3, 5, 7; -->Trk lead [var s = 30] @ 49.7	UDL spans: 2, 4, 6, 8; -->Trk laad [var s = 30] @ 59.7
1	6.83	UDL spans: 1, 3, 5, 7; -->Trk lead [var s = 30] @ 50.8	UDL spans: 2, 4, 6, 8; -->Trk lead [var s = 30] @ 59.7
1	7.96	UDL spans: 1, 3, 5, 7; -->Trk lead [var s = 30] @ 52.0	UDL spans: 2, 4, 6, 8; -->Trk lead [var s = 30] @ 59.7

1	9.10	UDL spans: 1 (Rt L = 8.4), 3, 5, 7; -->Trk lead [var s = 30] @ 23.1	UDL spans: 1 (Lt L = 2.9), 2, 4, 6, 8; <--Trk raar [var s = 30] @ 45.8
1	10.24	UDL spans: 1 (Rt L = 2.7), 3, 5, 7; -->Trk lead [var s = 30] @ 24.2	UDL spans: 1 (Lt L = 8.7), 2, 4, 6, 8; <--Trk raar [var s = 30] @ 46.2
1	11.38	UDL spans: 3, 5, 7; -->Trk lead [var s = 30] @ 71.1	UDL spans: 1, 2, 4, 6, 8; -->Trk laad [var s = 30] @ 20.0
2	0.00	UDL spans: 3, 5, 7; -->Trk lead [var s = 30] @ 71.1	UDL spans: 1, 2, 4, 8, 8; -->Trk lead [var s = 30] @ 20.0
2	1.14	UDL spans: 2 (Lt L = 3.2), 3, 5, 7; -->Trk laad [var s = 30] @ 26.5	UDL spans: 1, 2 (Rt L = 8.2), 4, 8, 8; -->Trk lead [var s = 30] @ 20.3
2	2.28	UDL spans: 2, 3; -->Trk laad [var s = 30] @ 27.7	UDL spans: 1, 4, 5, 6, 7, 8; -->Trk lead [var s = 30] @ 50.6
2	3.41	UDL spans: 2, 4, 8, 8; -->Trk lead [var s = 30] @ 58.8	UDL spans: 1, 3, 5, 7; -->Trk laad [var s = 30] @ 50.6
2	4.55	UDL spans: 2, 4, 6, 8; -->Trk lead [var s = 30] @ 59.9	UDL spans: 1, 3, 5, 7; -->Trk lead [var s = 30] @ 50.6
2	5.69	UDL spans: 2, 4, 6, 8; -->Trk lead [var s = 30] @ 81.1	UDL spans: 1, 3, 5, 7; -->Trk lead [var s = 30] @ 50.8
2	6.83	UDL spans: 2, 4, 6, 8; -->Trk laad [var s = 30] @ 62.2	UDL spans: 1, 3, 5, 7; -->Trk lead [var s = 30] @ 71.1
2	7.98	UDL spans: 2, 4, 8, 8; -->Trk lead [var s = 30] @ 63.3	UDL spans: 1, 3, 5, 7; -->Trk laad [var s = 30] @ 71.1
2	9.10	UDL spans: 1, 2 (Rt L = 8.9), 4, 6, 8; -->Trk lead [var s = 30] @ 34.5	UDL spans: 2 (Lt L = 2.4), 3, 5, 7; <--Trk rear [var s = 30] @ 57.2
2	10.24	UDL spans: 1, 2 (Rt L = 2.9), 4, 6, 8; <--Trk rear [var s = 30] @ 51.8	UDL spans: 2 (Lt L = 8.5), 3, 5, 7; -->Dbl Trk lead [Trk spa = 50] @ 42.3
2	11.38	UDL spans: 1, 4, 8, 8; <--Trk rear [var s = 30] @ 37.6	UDL spans: 2, 3, 5, 7; -->Dbl Trk laad [Trk spa = 50] @ 43.7
3	0.00	UDL spans: 1, 4, 8, 8; <--Trk raar [var s = 30] @ 37.6	UDL spans: 2, 3, 5, 7; -->Trk lead [var s = 30] @ 31.9
3	1.14	UDL spans: 1, 3 (Lt L = 2.9), 4, 6, 8; <--Trk rear [var s = 30] @ 53.9	UDL spans: 2, 3 (Rt L = 8.4), 5, 7; -->Trk lead [var s = 30] @ 32.1
3	2.28	UDL spans: 1, 3 (Lt L = 9.1), 4, 6, 8; <--Trk rear [var s = 30] @ 55.0	UDL spans: 2, 3 (Rt L = 2.3), 5, 7; -->Trk lead [var s = 30] @ 62.4
3	3.41	UDL spans: 1, 3, 5, 7; -->Trk lead [var s = 30] @ 70.2	UDL spans: 2, 4, 6, 8; -->Trk lead [var s = 30] @ 62.4
3	4.55	UDL spans: 1, 3, 5, 7; -->Trk lead [var s = 30] @ 71.3	UDL spans: 2, 4, 6, 8; -->Trk lead [var s = 30] @ 62.4
3	5.69	UDL spans: 1, 3, 5, 7; -->Trk lead [var s = 30] @ 72.4	UDL spans: 2, 4, 6, 8; -->Trk lead [var s = 30] @ 62.4
3	6.83	UDL spans: 1, 3, 5, 7; -->Trk lead [var s = 30] @ 73.8	UDL spans: 2, 4, 6, 8; -->Trk lead [var s = 30] @ 82.4
3	7.96	UDL spans: 1, 3, 5, 7; -->Trk lead [var s = 30] @ 44.7	UDL spans: 2, 4, 6, 8; -->Trk lead [var s = 30] @ 82.4
3	9.10	UDL spans: 2, 3 (Rt L = 9.0), 5, 7; -->Trk lead [var s = 30] @ 45.9	UDL spans: 1, 3 (Lt L = 2.4), 4, 6, 8; <--Trk rear [var s = 30] @ 38.4
3	10.24	UDL spans: 2, 3 (Rt L = 2.9), 5, 7; -->Trk laad [var s = 30] @ 47.0	UDL spans: 1, 3 (Lt L = 8.4), 4, 8, 8; <--Trk rear [var s = 30] @ 68.8
3	11.38	UDL spans: 2, 5, 7; <--Trk rear [var s = 30] @ 49.2	UDL spans: 1, 3, 4, 6, 8; -->Trk lead [var s = 30] @ 43.2
4	0.00	UDL spans: 2, 5, 7; <--Trk rear [var s = 30] @ 49.2	UDL spans: 1, 3, 4, 6, 8; -->Trk lead [var s = 30] @ 43.2
4	1.14	UDL spans: 2, 4 (Lt L = 2.9), 5, 7; <--Trk rear [var s = 30] @ 65.3	UDL spans: 1, 3, 4 (Rt L = 8.4), 6, 8; -->Trk lead [var s = 30] @ 43.5
4	2.28	UDL spans: 2, 4 (Lt L = 9.0), 5, 7; <--Trk rear [var s = 30] @ 68.4	UDL spans: 1, 3, 4 (Rt L = 2.4), 8, 8; -->Trk lead [var s = 30] @ 73.8
4	3.41	UDL spans: 2, 4, 6, 8; -->Trk lead [var s = 30] @ 81.5	UDL spans: 1, 3, 5, 7; -->Trk lead [var s = 30] @ 73.8
4	4.55	UDL spans: 2, 4, 6, 8; -->Trk lead [var s = 30] @ 82.7	UDL spans: 1, 3, 5, 7; -->Trk lead [var s = 30] @ 73.8
4	5.69	UDL spans: 2, 4, 6, 8; -->Trk lead [var s = 30] @ 83.8	UDL spans: 1, 3, 5, 7; <--Trk rear [var s = 30] @ 49.9
4	6.83	UDL spans: 2, 4, 8, 8; -->Trk lead [var s = 30] @ 85.0	UDL spans: 1, 3, 5, 7; <--Trk rear [var s = 30] @ 49.8
4	7.96	UDL spans: 2, 4, 6, 8; -->Trk lead [var s = 30] @ 56.1	UDL spans: 1, 3, 5, 7; <--Trk rear [var s = 30] @ 49.8
4	9.10	UDL spans: 1, 3, 4 (Rt L = 9.0), 6, 8; -->Trk lead [var s = 30] @ 57.2	UDL spans: 2, 4 (Lt L = 2.4), 5, 7; <--Trk rear [var s = 30] @ 49.8
4	10.24	UDL spans: 1, 3, 4 (Rt L = 2.9), 8, 8; -->Trk laad [var s = 30] @ 58.4	UDL spans: 2, 4 (Lt L = 8.4), 5, 7; <--Trk rear [var s = 30] @ 80.2
4	11.38	UDL spans: 1, 3, 6, 8; <--Trk rear [var s = 30] @ 60.6	UDL spans: 2, 4, 5, 7; <--Trk rear [var s = 30] @ 80.4
5	0.00	UDL spans: 1, 3, 6, 8; <--Trk rear [var s = 30] @ 60.6	UDL spans: 2, 4, 5, 7; <--Trk rear [var s = 30] @ 80.4
5	1.14	UDL spans: 1, 3, 5 (Lt L = 2.9), 6, 8; <--Trk rear [var s = 30] @ 76.6	UDL spans: 2, 4, 5 (Rt L = 8.4), 7; -->Trk laad [var s = 30] @ 64.8
5	2.28	UDL spans: 1, 3, 5 (Lt L = 9.0), 6, 8; <--Trk rear [var s = 30] @ 77.8	UDL spans: 2, 4, 5 (Rt L = 2.4), 7; -->Trk lead [var s = 30] @ 85.2
5	3.41	UDL spans: 1, 3, 5, 7; -->Trk laad [var s = 30] @ 92.9	UDL spans: 2, 4, 6, 8; -->Trk lead [var s = 30] @ 85.2
5	4.55	UDL spans: 1, 3, 5, 7; <--Trk rear [var s = 30] @ 50.1	UDL spans: 2, 4, 6, 8; -->Trk laad [var s = 30] @ 85.2
5	5.69	UDL spans: 1, 3, 5, 7; <--Trk rear [var s = 30] @ 51.2	UDL spans: 2, 4, 8, 8; -->Trk lead [var s = 30] @ 85.1
5	6.83	UDL spans: 1, 3, 5, 7; <--Trk rear [var s = 30] @ 52.3	UDL spans: 2, 4, 6, 8; <--Trk rear [var s = 30] @ 81.2
5	7.96	UDL spans: 1, 3, 5, 7; <--Trk rear [var s = 30] @ 53.5	UDL spans: 2, 4, 6, 8; <--Trk rear [var s = 30] @ 61.2
5	9.10	UDL spans: 2, 4, 5 (Rt L = 9.0), 7; -->Trk lead [var s = 30] @ 68.8	UDL spans: 1, 3, 5 (Lt L = 2.4), 8, 8; <--Trk rear [var s = 30] @ 61.2
5	10.24	UDL spans: 2, 4, 5 (Rt L = 2.9), 7; -->Trk laad [var s = 30] @ 69.7	UDL spans: 1, 3, 5 (Lt L = 8.4), 8, 8; <--Trk rear [var s = 30] @ 91.5
5	11.38	UDL spans: 2, 4, 7; -->Trk lead [var s = 30] @ 85.8	UDL spans: 1, 3, 5, 6, 8; <--Trk rear [var s = 30] @ 91.8
6	0.00	UDL spans: 2, 4, 7; -->Trk lead [var s = 30] @ 85.8	UDL spans: 1, 3, 5, 6, 8; <--Trk rear [var s = 30] @ 91.8
6	1.14	UDL spans: 2, 4, 6 (Lt L = 2.9), 7; <--Trk rear [var s = 30] @ 88.0	UDL spans: 1, 3, 5, 6 (Rt L = 8.4), 8; -->Trk lead [var s = 30] @ 66.2
6	2.28	UDL spans: 2, 4, 6 (Lt L = 9.0), 7; <--Trk rear [var s = 30] @ 89.2	UDL spans: 1, 3, 5, 6 (Rt L = 2.4), 8; -->Trk lead [var s = 30] @ 96.8
6	3.41	UDL spans: 2, 4, 6, 8; -->Trk lead [var s = 30] @ 104.3	UDL spans: 1, 3, 5, 7; <--Trk rear [var s = 30] @ 52.6
6	4.55	UDL spans: 2, 4, 8, 8; <--Trk rear [var s = 30] @ 81.4	UDL spans: 1, 3, 5, 7; <--Trk rear [var s = 30] @ 52.6
6	5.69	UDL spans: 2, 4, 6, 8; <--Trk rear [var s = 30] @ 62.6	UDL spans: 1, 3, 5, 7; <--Trk rear [var s = 30] @ 72.6
6	6.83	UDL spans: 2, 4, 8, 8; <--Trk rear [var s = 30] @ 63.7	UDL spans: 1, 3, 5, 7; <--Trk rear [var s = 30] @ 72.6
6	7.96	UDL spans: 2, 4, 6, 8; <--Trk rear [var s = 30] @ 64.8	UDL spans: 1, 3, 5, 7; <--Trk rear [var s = 30] @ 72.6
6	9.10	UDL spans: 1, 3, 5, 6 (Rt L = 9.1), 8; -->Trk lead [var s = 30] @ 80.0	UDL spans: 2, 4, 6 (Lt L = 2.3), 7; <--Trk rear [var s = 30] @ 72.6
6	10.24	UDL spans: 1, 3, 5, 6 (Rt L = 3.0), 8; -->Trk lead [var s = 30] @ 81.1	UDL spans: 2, 4, 8 (Lt L = 8.4), 7; <--Trk rear [var s = 30] @ 102.9
6	11.38	UDL spans: 1, 3, 5, 8; -->Trk lead [var s = 30] @ 97.4	UDL spans: 2, 4, 6, 7; <--Trk rear [var s = 30] @ 103.1
7	0.00	UDL spans: 1, 3, 5, 8; -->Trk lead [var s = 30] @ 97.4	UDL spans: 2, 4, 6, 7; <--Trk rear [var s = 30] @ 103.1
7	1.14	UDL spans: 1, 3, 5, 7 (Lt L = 2.9), 8; -->Trk lead [var s = 30] @ 83.4	UDL spans: 2, 4, 8, 7 (Rt L = 8.5); -->Trk lead [var s = 30] @ 77.8
7	2.28	UDL spans: 1, 3, 5, 7 (Lt L = 8.9), 8; <--Trk rear [var s = 30] @ 100.5	UDL spans: 2, 4, 6, 7 (Rt L = 2.4); -->Trk lead [var s = 30] @ 77.8
7	3.41	UDL spans: 1, 3, 5, 7; <--Trk rear [var s = 30] @ 71.7	UDL spans: 2, 4, 6, 8; <--Trk rear [var s = 30] @ 63.9
7	4.55	UDL spans: 1, 3, 5, 7; <--Trk rear [var s = 30] @ 72.8	UDL spans: 2, 4, 6, 8; <--Trk rear [var s = 30] @ 63.9
7	5.69	UDL spans: 1, 3, 5, 7; <--Trk rear [var s = 30] @ 73.9	UDL spans: 2, 4, 6, 8; <--Trk rear [var s = 30] @ 84.4
7	6.83	UDL spans: 1, 3, 5, 7; <--Trk rear [var s = 30] @ 75.1	UDL spans: 2, 4, 6, 8; <--Trk rear [var s = 30] @ 84.4
7	7.96	UDL spans: 1, 3, 5, 7; <--Trk rear [var s = 30] @ 76.2	UDL spans: 2, 4, 6, 8; <--Trk rear [var s = 30] @ 84.4
7	9.10	UDL spans: 1, 3, 5, 7; -->Trk lead [var s = 30] @ 91.4	UDL spans: 2, 4, 6, 8; -->Trk lead [var s = 30] @ 128.4
7	10.24	UDL spans: 2, 4, 6, 7 (Rt L = 3.2); <--Trk rear [var s = 30] @ 106.5	UDL spans: 1, 3, 5, 7 (Lt L = 8.2), 8; <--Trk rear [var s = 30] @ 114.7
7	11.38	UDL spans: 2, 4, 6; <--Trk rear [var s = 30] @ 63.9	UDL spans: 1, 3, 5, 7, 8; <--Trk rear [var s = 30] @ 115.0
8	0.00	UDL spans: 2, 4, 6; <--Trk rear [var s = 30] @ 63.9	UDL spans: 1, 3, 5, 7, 8; <--Trk rear [var s = 30] @ 115.0
8	1.14	UDL spans: 2, 4, 6, 8 (Lt L = 2.7); <--Trk raar [var s = 30] @ 110.8	UDL spans: 1, 3, 5, 7, 8 (Rt L = 8.7); -->Trk lead [var s = 30] @ 88.8

VQ-093
Rutland, VT
Steel Truss Bridge Deck Fatigue Loading

8	2.28	*UDL spans: 2, 4, 6, 8 (Lt L = 8.4); <--Trk rear [var s = 30] @ 111.9*	*UDL spans: 1, 3, 5, 7, 8 (Rt L = 2.9); -->Trk lead [var s = 30] @ 89.2*
8	3.41	*UDL spans: 2, 4, 6, 8; <--Trk rear [var s = 30] @ 83.0*	*UDL spans: 1, 3, 5, 7; <--Trk rear [var s = 30] @ 75.3*
8	4.55	*UDL spans: 2, 4, 6, 8; <--Trk rear [var s = 30] @ 84.2*	*UDL spans: 1, 3, 5, 7; <--Trk rear [var s = 30] @ 75.3*
8	5.69	*UDL spans: 2, 4, 6, 8; <--Trk rear [var s = 30] @ 85.3*	*UDL spans: 1, 3, 5, 7; <--Trk rear [var s = 30] @ 75.3*
8	6.83	*UDL spans: 2, 4, 6, 8; <--Trk rear [var s = 30] @ 86.5*	*UDL spans: 1, 3, 5, 7; <--Trk rear [var s = 30] @ 75.3*
8	7.98	*UDL spans: 2, 4, 6, 8; <--Trk rear [var s = 30] @ 87.6*	*UDL spans: 1, 3, 5, 7; <--Trk rear [var s = 30] @ 75.3*
8	9.10	*UDL spans: 2, 4, 6, 8; <--Trk rear [var s = 30] @ 88.7*	*UDL spans: 1, 3, 5, 7; <--Trk rear [var s = 30] @ 75.3*
8	10.24	*UDL spans: 2, 4, 6, 8; -->Trk lead [var s = 30] @ 103.9*	*UDL spans: 1, 3, 5, 7; <--Trk rear [var s = 30] @ 75.3*
8	11.38	*N/A*	*N/A*

The maximum fatigue range at any point on the deck is at midspan of the end spans

$\Delta M = 83.8\ ft{\cdot}k - -16.6\ ft{\cdot}k = 100.4\ ft{\cdot}k$

$\Delta f = \Delta M / S$ Table 3.4.1-1 $\gamma = 1.5$

Dead load also produces tension in the reinforcing in this Region.

the Section modulus to the steel in a deck strip is S_{strip}

$S_{strip} = (44.4\ in^3)\ (101.1\ in / 12\ in) = 374.1\ in^3$

factored $\Delta f = \overset{\gamma_{fatigue}}{(1.5)}(100.4\ ft{\cdot}k)(12\ in/ft) \div 374.1\ in^3 = 4.8\ ksi$

LRFD 5.5.3.2-1

$(\Delta F)_{th} = 24 - 0.33 f_{min}$

f_{min} = minimum live load stress (fatigue I) + DL stress

Min fatigue I live load stress $= (1.5)(-16.6\ ft{\cdot}k)(12) \div 374.1$

$= -0.80\ ksi$

Dead load stress $= (13.3\ ft{\cdot}k)(12\ in/ft) \div 374.1 = 0.43\ ksi$

$(\Delta F)_{th} = 24\ ksi - [0.33 \cdot (-0.8\ ksi + 0.43\ ksi)] = 24.1\ ksi$

$24.1\ ksi > 4.8\ ksi$ (Shrinkage + Creep will not change the result by inspection)

FST

PROJECT Rutland, VT

SUBJECT Steel T Truss
Ripley Road over Otter Creek

PROJECT NUMBER VQ-093
SHEET NUMBER 69
DATE 11/4/14
COMPUTED BY MAB
CHECKED BY TD

Check Negative Moment Fatigue.

Strip width = 82.1 in

min Fatigue moment = −49.6 ft·k

Factored = (1.5)(−49.6 ft·k) = −74.4 ft·k

Dead load moment Same location = −10.7 ft·k

max LL moment @ Same location = 20.3 ft·k

$S_{steel} = (44.9\ in^3)(82.1/12) = 307.2\ in^3$

$$\Delta f = \frac{(1.5)(20.3\ ft\cdot k - -74.4\ ft\cdot k)}{307.2\ in^3} = \frac{(142.1\ ft\cdot k)(12\ in/ft)}{307.2\ in^3}$$

$$\Delta f = 5.5\ ksi$$

$$(\Delta F)_{TH} = 24\ ksi - \left[0.33 \cdot \left(\frac{-20.3\ ft\cdot k \cdot 1.5 + 10.7\ ft\cdot k}{307.2\ in^3}\right) \cdot 12\ in/ft\right]$$

$$(\Delta F)_{TH} = 24.3\ ksi$$

$$24.3\ ksi > 5.5\ ksi$$

By inspection (creep + Shrinkage are insignificant)

OK.

FST

PROJECT Rutland Truss

PROJECT NUMBER YQ-064

SUBJECT Slab Design Sketch

SHEET NUMBER

DATE

COMPUTED BY MAB

CHECKED BY TD

use:

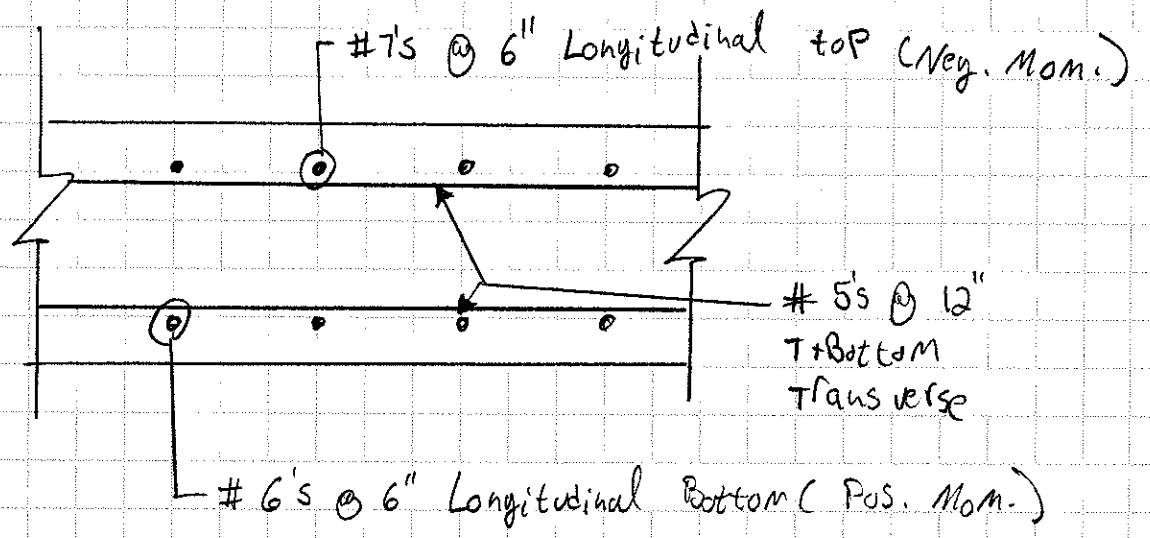

PEDESTRIAN

SIDE WALK

SLAB

3.4.3 Pedestrian Live Load

Unlike the Standard Specifications, AASHTO has not provided a reduction in sidewalk pedestrian live load intensity in the LRFD Specifications. The Standard Specs based the reduction on span length and sidewalk width.

Consider two loading cases when designing a conventional beam bridge with a sidewalk:

- Use a pedestrian live load on the sidewalk equal to 0.075 ksf and apply it in conjunction with a vehicular live load in the traffic lanes adjacent to the sidewalk.
- Place vehicular live load on the sidewalk and in adjacent traffic lanes with no pedestrian live load on the sidewalk.

For bridges carrying only pedestrian or bicycle traffic apply a live load of 0.085 k/ft² over the deck.

3.4.6 Snow Removal Live Load

Consider snow removal for sidewalks on highway bridges or on pedestrian bridges. Table 3.4.6 -1 lists typical vehicles used for this task. The designer need not apply the pickup or mid-duty truck live load to bridges with widths less than 5 feet.

Table 3.4.6 -1 Typical Snow Removal Vehicles

Vehicle Description	Designation	Gross Vehicle Weight (kips)	Max Width (feet)	Wheel Base (feet)	Front Axle Load (kips)	Rear Axle Load (kips)	Min Bridge Rail to Rail Width (feet)
Skid Steer Figure 3.4.6 -1	HV-05-09	10	5	4	5	5	6
Pickup Truck	HV-10-09	20	6	14	6	14	10
Mid-Duty Truck*	HV-05-09	30	6	14	6	24	10

* This truck is the H-15-44 truck from the AASHTO standard specifications.

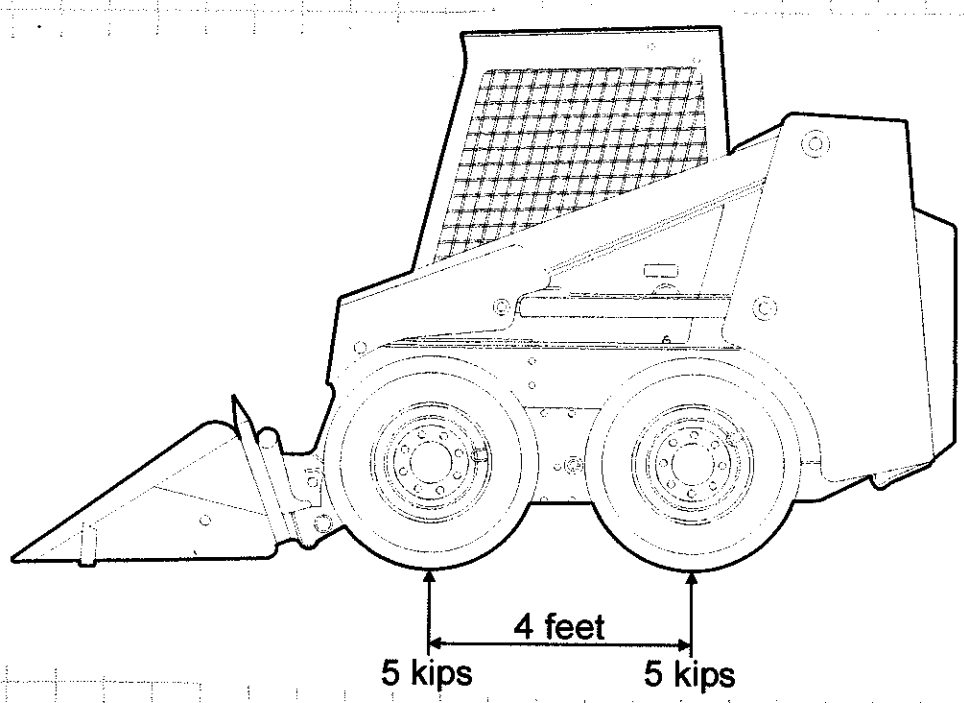

(VTrans Structures Design Manual)

FST

PROJECT Rutland, VT

SUBJECT Steel Truss Bridge Pedestrian Sidewalk

PROJECT NUMBER VQ-093

SHEET NUMBER 2

DATE 11/4/14

COMPUTED BY MAB

CHECKED BY TD

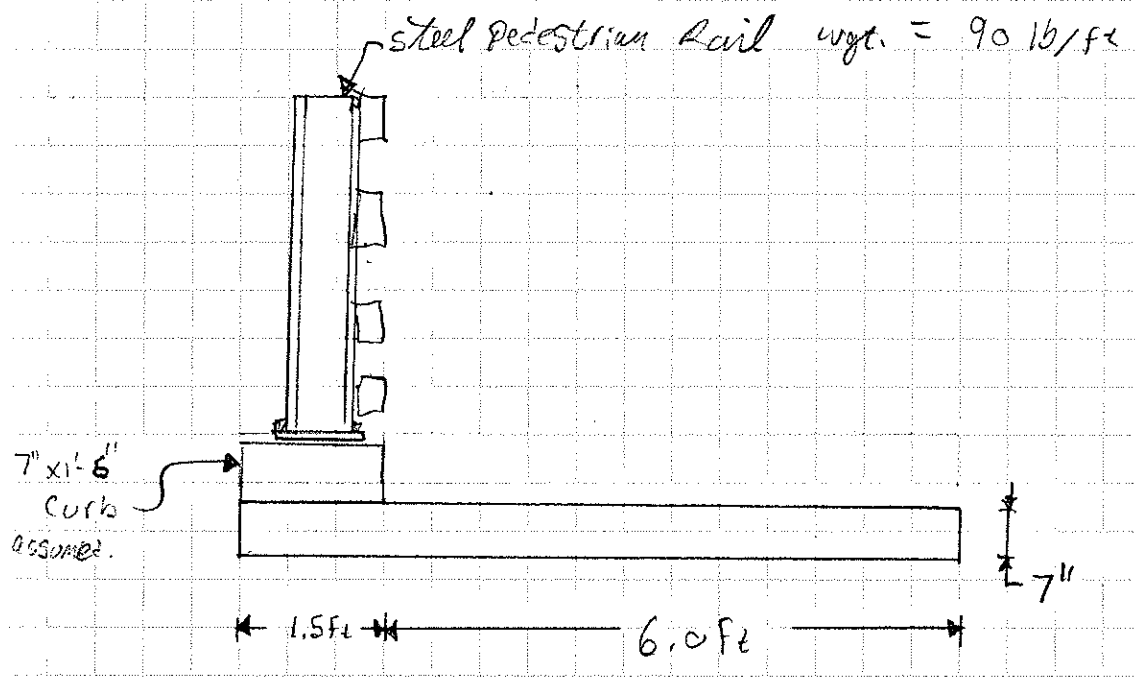

AASHTO LRFD Bridge Design Specifications 6th Edition (LRFD)
4.6.2.3 Equivalent width for Slab-Type Bridges

$$E = 10 + 5\sqrt{L_1 W_1} = 10 + 5\sqrt{11.375 \cdot 7.5} = 56.2 \text{ in}$$

$$E = 4.68 \text{ ft.}$$

The deck width values from LRFD 4.6.2.1.3-1 are the same for the Pedestrian Slab as they are for the Roadway Slab. See the roadway Slab Calcs

56.2 in Controls both positive and negative Moment.

LRFD 4.6.2.1.4 b

Edge strip width = 1.5ft + 12in + 1/4 · E ≤ E/2 ≤ 72in

Edge Strip width = 18in + 12in + 56.2in/4 ≤ 56.2in/2

Edge Strip width = 44.1 in ≤ 28.1in

Edge Strip Width = 28.1in
(for +M & -M)

Whole Strip Dead Loads:

Slab = (7") (7.5ft) (0.15kcf) = 0.66 KIF

total Dead Load = ΣDL_i = 0.66 KIF

Edge Strip Dead Loads: (Left)

Rail = 0.09 KIF
Curb = 0.13KIF
Slab = 0.66KIF/2

Total Dead Load = 0.55 KIF

Edge Strip Dead Loads : (Right)

Slab = 0.33 klf = total Dead load.

Which Strip Controls?

Left Strip vs. Right Strip.

- The only way the right strip could control is if the factored pedestrian load is heavier than the factored curb + Rail loads.

1.25 (Curb + Rail) = (1.25)(0.22 klf) = 0.28 klf

Ped load difference = 1.75 (0.085 ksf)(18 in)(1 ft/12 in) = 0.22 klf

The left edge strip is more heavily loaded at all limit states.

- The Calculation works out to the same numbers when comparing the left edge strip to an interior strip

THE LEFT EDGE STRIP CONTROLS THE DESIGN OF THE PEDESTRIAN SLAB.

Per LRFD 3.6.2.1 Dynamic load allowance need not be applied to the pedestrian load.

No impact on vehicles Per 3.6.1.6

Pedestrian Slab

Left Edge Strip

Snow Removal Vehicle

(No Impact Per AASHTO LRFD 3.6.1.6)

VQ-093
Rutland, VT
Steal Truss Bridge

Analysis ID = 4 S.D.L. Superimposed Dead Load

Loading Type: Live Load		Units			
Modulus of Elasticity (E)		Force	Length		
$E = Eo \times 10^x$		All input parameters must be in consistent units. Output values are in the same units as input.	Units used to specify span L are considered master units. Master units are used for all input and output data except parameters on the right are in sub units. Specify number of sub units per one master unit in the Master/Sub field (e.g. 1000 for m/mm or 12 for ft/in).	Parameter	Master/Sub
				L (sub*)	1
				E (force/sub*)	1
				Settl. (sub)	1
Eo =	1	Force Unit Name: kip	Master Length Unit Name: feet	Defl. (sub)	1
x =	1	Note: Force and master length unit names above have no effect on analysis and are for information only			

	Supports									
	Supp 1	Supp 2	Supp 3	Supp 4	Supp 5	Supp 6	Supp 7	Supp 8	Supp 9	Supp 10
Type	pin	pin	pin	pin	pin	pin	pin	pin	pin	

		Spans								
		Span 1	Span 2	Span 3	Span 4	Span 5	Span 6	Span 7	Span 8	Span 9
Segment 1	L	11.375	11.375	11.375	11.375	11.375	11.375	11.375	11.375	
	I	1	1	1	1	1	1	1	1	
Segment 2	L									
	I									
Segment 3	L									
	I									
Segment 4	L									
	I									
Segment 5	L									
	I									
Segment 6	L									
	I									
Segment 7	L									
	I									
Segment 8	L									
	I									
Segment 9	L									
	I									
Segment 10	L									
	I									
Segment 11	L									
	I									
Segment 12	L									
	I									
Segment 13	L									
	I									
	Span L =	11.375	11.375	11.375	11.375	11.375	11.375	11.375	11.375	0

Live Load --> Lane (UDL) combined with Truck or Tandem

Usa lane combined with truck or tandam, whichever produce maximum adverse force effect

Lana Loading:

UDL = 0.01

Truck Loading:

Laad axla P1 = 0.1
axle P2 = 0.1
axla P3 = 0.1
P1/P2 Spa = 14
P2/P3 Spa = vary 14 to 30

Tandam Loading:

axla P = 2.5
axle Spa = 4

In addition to lana combined with single truck/tandem, calculate moments in (-)M regions and max reactions at intermediate supports dua to lane combinad with two trucks placed in critical locations in adjacent to intermediate support spans. The following applies:

2-Trucks:

Constant P2/P3 Spa =	14
Min spa betwaen 2nd trk lead/1st trk rear axlas =	50
[Lane+Doubla Trk] Reduct Factor (axcept react) =	0.9
[Lane+DoubleTrk] Reaction Reduct Factor =	0.9

Load Multipliers:

Lana m =	1
Truck/Tandam m =	1

Spacified Option: Naglect axles that reduce adversa force effacts

Note:
Live Load is based on HL-93 (AASHTO LRFD) loading

Max LL Vertical Reactions & Corresponding Rotations

	----Max Reactions----		----Min Raactions----	
Support	max R	Rotation	min R	Rotation
1	3.97	-1.6292	-0.34	0.7303
2	4.91	0.3290	-0.55	0.3914
3	4.83	0.0007	-0.74	-0.4451
4	4.83	0.0005	-0.81	-0.3646
5	4.83	0.0000	-0.60	-0.3591
6	4.83	-0.0005	-0.61	0.3846
7	4.83	-0.0007	-0.74	0.4451
8	4.91	-0.3812	-0.55	-0.3914
9	3.97	1.6292	-0.34	-0.7303

Max LL Rotations & Corresponding Vertical Reactions

	----Pos Rotations----		----Neg Rotations----	
Support	(+)Rot	React	(-)Rot	React
1	0.7318	-0.34	-2.7312	2.43
2	1.6989	3.67	-1.4637	3.20
3	1.3935	3.38	-1.3803	3.33
4	1.3740	3.35	-1.3723	3.34
5	1.3722	3.34	-1.3722	3.34
6	1.3723	3.34	-1.3740	3.35
7	1.3803	3.33	-1.3935	3.38
8	1.4637	3.20	-1.6989	3.67
9	2.7312	2.43	-0.7318	-0.34

Max LL Shears & Corresponding Moments

		----Pos Shaars---		----Neg Shaars----		
Span	X	(+)V	M	(-)V	M	
1	0.00	4.0	0.0	-0.3	0.0	*supp 1*
1	1.14	3.4	3.8	-0.3	-0.4	*pt 0.1*
1	2.28	2.8	6.3	-0.6	4.3	*pt 0.2*
1	3.41	2.2	7.5	-0.9	5.4	*pt 0.3*
1	4.55	1.7	7.7	-1.4	6.5	*pt 0.4*
1	5.69	1.2	7.0	-2.0	7.3	*pt 0.5*
1	6.83	0.8	5.5	-2.6	6.9	*pt 0.6*
1	7.96	0.5	4.1	-3.1	5.4	*pt 0.7*
1	9.10	0.3	2.8	-3.6	3.1	*pt 0.8*
1	10.24	0.1	1.4	-4.1	0.2	*pt 0.9*
1	11.38	0.1	1.0	-4.4	-3.0	*supp 2*
2	0.00	4.2	-2.4	-0.5	1.0	*supp 2*
2	1.14	3.7	0.8	-0.5	0.5	*pt 0.1*
2	2.28	3.2	3.4	-0.5	0.0	*pt 0.2*
2	3.41	2.6	5.1	-0.7	4.0	*pt 0.3*
2	4.55	2.1	6.0	-1.1	5.1	*pt 0.4*
2	5.69	1.5	5.9	-1.6	5.9	*pt 0.5*
2	6.83	1.0	5.0	-2.1	5.9	*pt 0.6*
2	7.96	0.7	3.9	-2.7	5.0	*pt 0.7*
2	9.10	0.6	0.1	-3.3	3.2	*pt 0.8*
2	10.24	0.6	0.7	-3.8	0.6	*pt 0.9*
2	11.38	0.6	1.4	-4.3	-2.6	*supp 3*

3	0.00	4.2	-2.5	-0.5	1.1	*supp 3*
3	1.14	3.8	0.6	-0.5	0.6	*pt 0.1*
3	2.28	3.2	3.2	-0.5	0.1	*pt 0.2*
3	3.41	2.7	5.0	-0.7	3.9	*pt 0.3*
3	4.55	2.1	5.9	-1.1	5.0	*pt 0.4*
3	5.69	1.6	5.9	-1.6	5.9	*pt 0.5*
3	6.83	1.1	5.0	-2.1	5.9	*pt 0.6*
3	7.96	0.7	3.9	-2.7	5.0	*pt 0.7*
3	9.10	0.5	0.1	-3.2	3.2	*pt 0.8*
3	10.24	0.5	0.6	-3.8	0.6	*pt 0.9*
3	11.38	0.5	1.1	-4.3	-2.6	*supp 4*
4	0.00	4.3	-2.6	-0.5	1.1	*supp 4*
4	1.14	3.8	0.6	-0.5	0.6	*pt 0.1*
4	2.28	3.2	3.2	-0.5	0.1	*pt 0.2*
4	3.41	2.7	5.0	-0.7	3.9	*pt 0.3*
4	4.55	2.1	5.9	-1.1	5.0	*pt 0.4*
4	5.69	1.6	5.9	-1.6	5.9	*pt 0.5*
4	6.83	1.1	5.0	-2.1	5.9	*pt 0.6*
4	7.96	0.7	3.9	-2.7	5.0	*pt 0.7*
4	9.10	0.5	0.1	-3.2	3.2	*pt 0.8*
4	10.24	0.5	0.6	-3.8	0.6	*pt 0.9*
4	11.38	0.5	1.1	-4.2	-2.6	*supp 5*
5	0.00	4.2	-2.6	-0.5	1.1	*supp 5*
5	1.14	3.8	0.6	-0.5	0.6	*pt 0.1*
5	2.28	3.2	3.2	-0.5	0.1	*pt 0.2*
5	3.41	2.7	5.0	-0.7	3.9	*pt 0.3*
5	4.55	2.1	5.9	-1.1	5.0	*pt 0.4*
5	5.69	1.6	5.9	-1.6	5.9	*pt 0.5*
5	6.83	1.1	5.0	-2.1	5.9	*pt 0.6*
5	7.98	0.7	3.9	-2.7	5.0	*pt 0.7*
5	9.10	0.5	0.1	-3.2	3.2	*pt 0.8*
5	10.24	0.5	0.6	-3.8	0.6	*pt 0.9*
5	11.38	0.5	1.1	-4.3	-2.6	*supp 6*
6	0.00	4.3	-2.8	-0.5	1.1	*supp 6*
6	1.14	3.8	0.6	-0.5	0.6	*pt 0.1*
8	2.28	3.2	3.2	-0.5	0.1	*pt 0.2*
6	3.41	2.7	5.0	-0.7	3.9	*pt 0.3*
6	4.55	2.1	5.9	-1.1	5.0	*pt 0.4*
6	5.69	1.6	5.9	-1.6	5.9	*pt 0.5*
6	6.83	1.1	5.0	-2.1	5.9	*pt 0.6*
6	7.96	0.7	3.9	-2.7	5.0	*pt 0.7*
6	9.10	0.5	0.1	-3.2	3.2	*pt 0.8*
6	10.24	0.5	0.6	-3.8	0.6	*pt 0.9*
6	11.38	0.5	1.1	-4.2	-2.5	*supp 7*
7	0.00	4.3	-2.6	-0.6	1.4	*supp 7*
7	1.14	3.8	0.6	-0.6	0.7	*pt 0.1*
7	2.28	3.3	3.2	-0.6	0.1	*pt 0.2*
7	3.41	2.7	5.0	-0.7	3.9	*pt 0.3*
7	4.55	2.1	5.9	-1.0	5.0	*pt 0.4*
7	5.69	1.6	5.9	-1.5	5.9	*pt 0.5*
7	6.83	1.1	5.1	-2.1	6.0	*pt 0.6*
7	7.96	0.7	4.0	-2.6	5.1	*pt 0.7*
7	9.10	0.5	0.0	-3.2	3.4	*pt 0.8*
7	10.24	0.5	0.5	-3.7	0.8	*pt 0.9*
7	11.38	0.5	1.0	-4.2	-2.4	*supp 8*
8	0.00	4.4	-3.0	-0.1	1.0	*supp 8*
8	1.14	4.1	0.2	-0.1	1.4	*pt 0.1*
8	2.28	3.6	3.1	-0.3	2.8	*pt 0.2*
8	3.41	3.1	5.4	-0.5	4.1	*pt 0.3*
8	4.55	2.6	6.9	-0.8	5.5	*pt 0.4*
8	5.69	2.0	7.3	-1.2	7.0	*pt 0.5*
8	6.83	1.4	6.5	-1.7	7.7	*pt 0.6*
8	7.96	0.9	5.4	-2.2	7.5	*pt 0.7*
8	9.10	0.6	4.3	-2.8	6.3	*pt 0.8*
8	10.24	0.3	-0.4	-3.4	3.8	*pt 0.9*
8	11.38	0.3	0.0	-4.0	0.0	*supp 9*

Mex LL Moments & Corresponding Sheers

		----Pos Moments----		----Neg Moments----		
Span	X	(+)M	V	(-)M	V	
1	0.00	0.0	0.0	0.0	0.0	*supp 1*

1	1.14	3.8	3.4	-0.4	-0.3	*pt 0.1*
1	2.28	6.3	2.8	-0.8	-0.3	*pt 0.2*
1	3.41	7.6	2.2	-1.2	-0.3	*pt 0.3*
1	4.55	7.8	1.7	-1.5	-0.3	*pt 0.4*
1	5.69	7.4	-2.0	-1.9	-0.3	*pt 0.5*
1	6.83	6.9	-2.6	-2.3	-0.3	*pt 0.6*
1	7.96	5.5	-3.1	-2.7	-0.3	*pt 0.7*
1	9.10	3.2	-3.6	-3.1	-0.3	*pt 0.8*
1	10.24	1.4	-2.4	-3.5	-0.4	*pt 0.9*
1	11.38	1.0	0.1	-5.2	-3.3	*supp 2*
2	0.00	1.0	-0.5	-5.2	0.6	*supp 2*
2	1.14	1.5	2.3	-4.5	0.6	*pt 0.1*
2	2.28	3.5	3.2	-3.8	0.8	*pt 0.2*
2	3.41	5.2	2.8	-3.2	0.6	*pt 0.3*
2	4.55	6.1	2.1	-2.6	0.6	*pt 0.4*
2	5.69	6.0	-1.6	-1.9	0.8	*pt 0.5*
2	6.83	6.0	-2.1	-2.1	-0.4	*pt 0.6*
2	7.96	5.1	-2.7	-2.6	-0.4	*pt 0.7*
2	9.10	3.3	-3.2	-3.1	-0.5	*pt 0.8*
2	10.24	1.5	-2.3	-3.6	-0.5	*pt 0.9*
2	11.38	1.4	0.6	-4.3	-3.0	*supp 3*
3	0.00	1.4	-0.2	-4.3	0.5	*supp 3*
3	1.14	1.5	2.3	-3.7	0.5	*pt 0.1*
3	2.28	3.3	3.2	-3.2	0.5	*pt 0.2*
3	3.41	5.1	2.7	-2.6	0.5	*pt 0.3*
3	4.55	6.0	2.1	-2.1	0.5	*pt 0.4*
3	5.69	5.9	-1.5	-1.6	0.5	*pt 0.5*
3	6.83	6.0	-2.1	-2.1	-0.5	*pt 0.6*
3	7.96	5.1	-2.7	-2.6	-0.5	*pt 0.7*
3	9.10	3.3	-3.2	-3.1	-0.5	*pt 0.8*
3	10.24	1.5	-2.3	-3.7	-0.5	*pt 0.9*
3	11.38	1.2	0.5	-4.2	-3.1	*supp 4*
4	0.00	1.2	-0.1	-4.2	0.5	*supp 4*
4	1.14	1.5	2.3	-3.7	0.5	*pt 0.1*
4	2.28	3.3	3.2	-3.1	0.5	*pt 0.2*
4	3.41	5.1	2.7	-2.6	0.5	*pt 0.3*
4	4.55	6.0	2.1	-2.1	0.5	*pt 0.4*
4	5.69	5.9	-1.5	-1.6	0.5	*pt 0.5*
4	6.83	6.0	-2.1	-2.1	-0.5	*pt 0.6*
4	7.96	5.1	-2.7	-2.6	-0.5	*pt 0.7*
4	9.10	3.3	-3.2	-3.1	-0.5	*pt 0.8*
4	10.24	1.5	-2.3	-3.7	-0.5	*pt 0.9*
4	11.38	1.1	0.5	-4.2	-3.1	*supp 5*
5	0.00	1.1	-0.1	-4.2	0.5	*supp 5*
5	1.14	1.5	2.3	-3.7	0.5	*pt 0.1*
5	2.28	3.3	3.2	-3.1	0.5	*pt 0.2*
5	3.41	5.1	2.7	-2.6	0.5	*pt 0.3*
5	4.55	6.0	2.1	-2.1	0.5	*pt 0.4*
5	5.69	5.9	1.5	-1.8	-0.5	*pt 0.5*
5	6.83	6.0	-2.1	-2.1	-0.5	*pt 0.6*
5	7.96	5.1	-2.7	-2.6	-0.5	*pt 0.7*
5	9.10	3.3	-3.2	-3.1	-0.5	*pt 0.8*
5	10.24	1.5	-2.3	-3.7	-0.5	*pt 0.9*
5	11.38	1.2	0.1	-4.2	-0.5	*supp 6*
6	0.00	1.2	-0.5	-4.2	3.1	*supp 6*
6	1.14	1.5	2.3	-3.7	0.5	*pt 0.1*
6	2.28	3.3	3.2	-3.1	0.5	*pt 0.2*
6	3.41	5.1	2.7	-2.6	0.5	*pt 0.3*
6	4.55	6.0	2.1	-2.1	0.5	*pt 0.4*
6	5.69	5.9	1.5	-1.6	-0.5	*pt 0.5*
6	6.83	6.0	-2.1	-2.1	-0.5	*pt 0.6*
6	7.96	5.1	-2.7	-2.6	-0.5	*pt 0.7*
6	9.10	3.3	-3.2	-3.2	-0.5	*pt 0.8*
6	10.24	1.5	-2.3	-3.7	-0.5	*pt 0.9*
6	11.38	1.4	0.2	-4.3	-0.5	*supp 7*
7	0.00	1.4	-0.6	-4.3	3.0	*supp 7*
7	1.14	1.5	2.3	-3.6	0.5	*pt 0.1*
7	2.28	3.3	3.2	-3.1	0.5	*pt 0.2*
7	3.41	5.1	2.7	-2.6	0.4	*pt 0.3*
7	4.55	6.0	2.1	-2.1	0.4	*pt 0.4*
7	5.69	6.0	1.6	-1.9	-0.6	*pt 0.5*

7	6.83	6.1	-2.1	-2.6	-0.6	pt 0.6
7	7.96	5.2	-2.6	-3.2	-0.6	pt 0.7
7	9.10	3.5	-3.2	-3.8	-0.6	pt 0.8
7	10.24	1.5	-2.3	-4.5	-0.8	pt 0.9
7	11.38	1.0	0.5	-5.2	-0.6	supp 8
8	0.00	1.0	-0.1	-5.2	3.3	supp 8
8	1.14	1.4	2.4	-3.5	0.4	pt 0.1
8	2.28	3.2	3.6	-3.1	0.3	pt 0.2
8	3.41	5.5	3.1	-2.7	0.3	pt 0.3
8	4.55	6.9	2.6	-2.3	0.3	pt 0.4
8	5.69	7.4	2.0	-1.9	0.3	pt 0.5
8	6.83	7.8	-1.7	-1.5	0.3	pt 0.6
8	7.96	7.6	-2.2	-1.2	0.3	pt 0.7
8	9.10	6.3	-2.8	-0.8	0.3	pt 0.8
8	10.24	3.8	-3.4	-0.4	0.3	pt 0.9
8	11.38	0.0	0.0	0.0	0.0	supp 9

Max LL Reactions - Critical Case Desription

Support	(+)Reactions	(-)Reactions
1	UDL spans: 1, 3, 5, 7; -->Tdm leed @ 4.0	UDL spans: 2, 4, 8, 8; -->Tdm lead @ 18.4
2	UDL spans: 1, 2, 4, 6, 8; -->Tdm lead @ 12.7	UDL spans: 3, 5, 7; -->Tdm lead @ 29.8
3	UDL spans: 2, 3, 5, 7; -->Tdm lead @ 24.8	UDL spans: 1, 4, 6, 8; -->Tdm lead @ 7.9
4	UDL spans: 1, 3, 4, 6, 8; -->Tdm leed @ 36.1	UDL spans: 2, 5, 7; -->Tdm lead @ 19.7
5	UDL spens: 2, 4, 5, 7; -->Tdm leed @ 47.5	UDL spans: 1, 3, 6, 8; -->Tdm lead @ 31.1
6	UDL spans: 1, 3, 5, 6, 8; -->Tdm leed @ 58.9	UDL spans: 2, 4, 7; -->Tdm lead @ 75.3
7	UDL spans: 2, 4, 6, 7; -->Tdm leed @ 70.3	UDL spens: 1, 3, 5, 8; -->Tdm lead @ 87.1
8	UDL spans: 1, 3, 5, 7, 8; -->Tdm lead @ 82.4	UDL spans: 2, 4, 6; -->Tdm lead @ 65.2
9	UDL spans: 2, 4, 6, 8; -->Tdm leed @ 91.0	UDL spans: 1, 3, 5, 7; -->Tdm lead @ 78.6

Max LL Rotations - Critical Case Desription

Support	(+)Rotations	(-)Rotations
1	UDL spens: 2, 4, 6, 8; -->Tdm leed @ 18.4	UDL spans: 1, 3, 5, 7; -->Tdm lead @ 7.0
2	UDL spans: 1, 3, 5, 7; -->Tdm leed @ 7.9	UDL spans: 2, 4, 6, 8; -->Tdm lead @ 18.4
3	UDL spans: 2, 4, 6, 8; -->Tdm leed @ 19.7	UDL spans: 1, 3, 5, 7; -->Tdm laad @ 29.8
4	UDL spans: 1, 3, 5, 7; -->Tdm lead @ 31.1	UDL spans: 2, 4, 6, 8; -->Tdm laad @ 41.1
5	UDL spans: 2, 4, 6, 8; -->Tdm leed @ 42.5	UDL spans: 1, 3, 5, 7; -->Tdm lead @ 52.5
6	UDL spans: 1, 3, 5, 7; -->Tdm leed @ 53.9	UDL spans: 2, 4, 6, 8; -->Tdm lead @ 63.9
7	UDL spans: 2, 4, 6, 8; -->Tdm lead @ 65.2	UDL spans: 1, 3, 5, 7; -->Tdm lead @ 75.3
8	UDL spans: 1, 3, 5, 7; -->Tdm leed @ 76.8	UDL spans: 2, 4, 6, 8; -->Tdm lead @ 87.1
9	UDL spens: 2, 4, 6, 8; -->Tdm lead @ 88.0	UDL spens: 1, 3, 5, 7; -->Tdm lead @ 76.6

Max LL Shears - Critical Casa Desripton

Span	X	(+)Shaars	(-)Shaars
1	0.00	UDL spans: 1, 3, 5, 7; -->Tdm lead @ 4.0	UDL spans: 2, 4, 6, 8; -->Tdm lead @ 18.4
1	1.14	UDL spans: 1 (Rt L = 10.2), 3, 5, 7; -->Tdm lead @ 5.1	UDL spans: 1 (Lt L = 1.1), 2, 4, 6, 8; -->Tdm lead @ 18.4
1	2.28	UDL spans: 1 (Rt L = 9.1), 3, 5, 7; -->Tdm lead @ 8.3	UDL spens: 1 (Lt L = 2.3), 2, 4, 6, 8; -->Tdm leed @ 6.3
1	3.41	UDL spans: 1 (Rt L = 8.0), 3, 5, 7; -->Tdm leed @ 7.4	UDL spans: 1 (Lt L = 3.4), 2, 4, 6, 8; -->Tdm lead @ 7.4
1	4.55	UDL spans: 1 (Rt L = 8.8), 3, 5, 7; -->Tdm lead @ 8.6	UDL spans: 1 (Lt L = 4.6), 2, 4, 6, 8; -->Tdm leed @ 4.5
1	5.89	UDL spans: 1 (Rt L = 5.7), 3, 5, 7; -->Tdm lead @ 9.7	UDL spans: 1 (Lt L = 5.7), 2, 4, 6, 8; -->Tdm lead @ 5.7
1	6.83	UDL spans: 1 (Rt L = 4.6), 3, 5, 7; -->Tdm lead @ 10.8	UDL spans: 1 (Lt L = 6.8), 2, 4, 8, 8; -->Tdm leed @ 6.8
1	7.96	UDL spans: 1 (Rt L = 3.4), 3, 5, 7; -->Tdm lead @ 8.0	UDL spans: 1 (Lt L = 8.0), 2, 4, 6, 8; -->Tdm lead @ 8.0
1	9.10	UDL spans: 1 (Rt L = 2.3), 3, 5, 7; -->Tdm lead @ 9.1	UDL spans: 1 (Lt L = 9.1), 2, 4, 6, 8; -->Tdm leed @ 9.1
1	10.24	UDL spans: 1 (Rt L = 1.1), 3, 5, 7; -->Tdm laad @ 10.2	UDL spans: 1 (Lt L = 10.2), 2, 4, 8, 8; -->Tdm leed @ 10.2
1	11.38	UDL spans: 3, 5, 7; -->Tdm leed @ 29.8	UDL spans: 1, 2, 4, 6, 8; -->Tdm lead @ 11.4
2	0.00	UDL spans: 1, 2, 4, 6, 8; -->Tdm lead @ 15.4	UDL spans: 3, 5, 7; -->Tdm laad @ 29.8
2	1.14	UDL spans: 1, 2 (Rt L = 10.2), 4, 8, 8; -->Tdm lead @ 16.5	UDL spans: 2 (Lt L = 1.1), 3, 5, 7; -->Tdm laad @ 29.8
2	2.28	UDL spans: 1, 2 (Rt L = 9.1), 4, 8, 8; -->Tdm lead @ 17.7	UDL spans: 2 (Lt L = 2.3), 3, 5, 7; -->Tdm lead @ 29.8
2	3.41	UDL spans: 1, 2 (Rt L = 8.0), 4, 6, 8; -->Tdm lead @ 18.8	UDL spans: 2 (Lt L = 3.4), 3, 5, 7; -->Tdm lead @ 18.8
2	4.55	UDL spans: 1, 2 (Rt L = 6.8), 4, 8, 8; -->Tdm leed @ 19.9	UDL spans: 2 (Lt L = 4.6), 3, 5, 7; -->Tdm lead @ 15.9
2	5.69	UDL spans: 1, 2 (Rt L = 5.7), 4, 6, 8; -->Tdm lead @ 21.1	UDL spans: 2 (Lt L = 5.7), 3, 5, 7; -->Tdm lead @ 17.1
2	8.83	UDL spans: 1, 2 (Rt L = 4.6), 4, 6, 8; -->Tdm lead @ 22.2	UDL spans: 2 (Lt L = 6.8), 3, 5, 7; -->Tdm lead @ 18.2
2	7.96	UDL spans: 1, 2 (Rt L = 3.4), 4, 6, 8; -->Tdm leed @ 19.3	UDL spans: 2 (Lt L = 8.0), 3, 5, 7; -->Tdm lead @ 19.3
2	9.10	UDL spans: 1, 2 (Rt L = 2.3), 4, 6, 8; -->Tdm leed @ 7.9	UDL spans: 2 (Lt L = 9.1), 3, 5, 7; -->Tdm leed @ 20.5
2	10.24	UDL spans: 1, 2 (Rt L = 1.1), 4, 6, 8; -->Tdm lead @ 7.9	UDL spens: 2 (Lt L = 10.2), 3, 5, 7; -->Tdm lead @ 21.6
2	11.38	UDL spans: 1, 4, 6, 8; -->Tdm lead @ 7.9	UDL spans: 2, 3, 5, 7; -->Tdm lead @ 22.7
3	0.00	UDL spans: 2, 3, 5, 7; -->Tdm leed @ 28.8	UDL spens: 1, 4, 6, 8; -->Tdm lead @ 41.1
3	1.14	UDL spans: 2, 3 (Rt L = 10.2), 5, 7; -->Tdm leed @ 27.9	UDL spans: 1, 3 (Lt L = 1.1), 4, 6, 8; -->Tdm leed @ 41.1
3	2.28	UDL spens: 2, 3 (Rt L = 9.1), 5, 7; -->Tdm leed @ 29.0	UDL spans: 1, 3 (Lt L = 2.3), 4, 6, 8; -->Tdm leed @ 41.1
3	3.41	UDL spans: 2, 3 (Rt L = 8.0), 5, 7; -->Tdm leed @ 30.2	UDL spans: 1, 3 (Lt L = 3.4), 4, 6, 8; -->Tdm leed @ 30.2
3	4.55	UDL spans: 2, 3 (Rt L = 6.8), 5, 7; -->Tdm lead @ 31.3	UDL spans: 1, 3 (Lt L = 4.6), 4, 6, 8; -->Tdm leed @ 27.3
3	5.69	UDL spens: 2, 3 (Rt L = 5.7), 5, 7; -->Tdm leed @ 32.4	UDL spans: 1, 3 (Lt L = 5.7), 4, 6, 8; -->Tdm leed @ 28.4

3	6.83	UDL spans: 2, 3 (Rt L = 4.8), 5, 7; -->Tdm laad @ 33.8	UDL spans: 1, 3 (Lt L = 8.8), 4, 6, 8; -->Tdm laad @ 29.6
3	7.98	UDL spans: 2, 3 (Rt L = 3.4), 5, 7; -->Tdm lead @ 30.7	UDL spans: 1, 3 (Lt L = 8.0), 4, 6, 8; -->Tdm laad @ 30.7
3	9.10	UDL spans: 2, 3 (Rt L = 2.3), 5, 7; -->Tdm lead @ 19.7	UDL spans: 1, 3 (Lt L = 9.1), 4, 6, 8; -->Tdm laad @ 31.8
3	10.24	UDL spans: 2, 3 (Rt L = 1.1), 5, 7; -->Tdm laad @ 19.7	UDL spans: 1, 3 (Lt L = 10.2), 4, 6, 8; -->Tdm lead @ 33.0
3	11.38	UDL spans: 2, 5, 7; -->Tdm laad @ 19.7	UDL spans: 1, 3, 4, 8, 8; -->Tdm laad @ 34.1
4	0.00	UDL spans: 1, 3, 4, 6, 8; -->Tdm lead @ 38.1	UDL spans: 2, 5, 7; -->Tdm lead @ 52.5
4	1.14	UDL spans: 1, 3, 4 (Rt L = 10.2), 6, 8; -->Tdm lead @ 39.3	UDL spans: 2, 4 (Lt L = 1.1), 5, 7; -->Tdm lead @ 52.5
4	2.28	UDL spans: 1, 3, 4 (Rt L = 9.1), 6, 8; -->Tdm laad @ 40.4	UDL spans: 2, 4 (Lt L = 2.3), 5, 7; -->Tdm lead @ 52.5
4	3.41	UDL spans: 1, 3, 4 (Rt L = 8.0), 8, 8; -->Tdm lead @ 41.5	UDL spans: 2, 4 (Lt L = 3.4), 5, 7; -->Tdm lead @ 41.5
4	4.55	UDL spans: 1, 3, 4 (Rt L = 6.8), 8, 8; -->Tdm laad @ 42.7	UDL spans: 2, 4 (Lt L = 4.8), 5, 7; -->Tdm laad @ 38.7
4	5.69	UDL spans: 1, 3, 4 (Rt L = 5.7), 6, 8; -->Tdm lead @ 43.8	UDL spans: 2, 4 (Lt L = 5.7), 5, 7; -->Tdm lead @ 39.8
4	6.83	UDL spans: 1, 3, 4 (Rt L = 4.6), 8, 8; -->Tdm lead @ 45.0	UDL spans: 2, 4 (Lt L = 8.8), 5, 7; -->Tdm lead @ 40.9
4	7.96	UDL spans: 1, 3, 4 (Rt L = 3.4), 8, 8; -->Tdm lead @ 42.1	UDL spans: 2, 4 (Lt L = 8.0), 5, 7; -->Tdm laad @ 42.1
4	9.10	UDL spans: 1, 3, 4 (Rt L = 2.3), 6, 8; -->Tdm lead @ 31.1	UDL spans: 2, 4 (Lt L = 9.1), 5, 7; -->Tdm laad @ 43.2
4	10.24	UDL spans: 1, 3, 4 (Rt L = 1.1), 6, 8; -->Tdm lead @ 31.1	UDL spans: 2, 4 (Lt L = 10.2), 5, 7; -->Tdm lead @ 44.4
4	11.38	UDL spans: 1, 3, 6, 8; -->Tdm lead @ 31.1	UDL spans: 2, 4, 5, 7; -->Tdm laad @ 45.5
5	0.00	UDL spans: 2, 4, 5, 7; -->Tdm lead @ 49.5	UDL spans: 1, 3, 6, 8; -->Tdm lead @ 63.9
5	1.14	UDL spans: 2, 4, 5 (Rt L = 10.2), 7; -->Tdm lead @ 50.6	UDL spans: 1, 3, 5 (Lt L = 1.1), 6, 8; -->Tdm lead @ 63.9
5	2.28	UDL spans: 2, 4, 5 (Rt L = 9.1), 7; -->Tdm lead @ 51.8	UDL spans: 1, 3, 5 (Lt L = 2.3), 8, 8; -->Tdm lead @ 83.9
5	3.41	UDL spans: 2, 4, 5 (Rt L = 8.0), 7; -->Tdm lead @ 52.9	UDL spans: 1, 3, 5 (Lt L = 3.4), 6, 8; -->Tdm lead @ 52.9
5	4.55	UDL spans: 2, 4, 5 (Rt L = 6.8), 7; -->Tdm lead @ 54.1	UDL spans: 1, 3, 5 (Lt L = 4.8), 8, 8; -->Tdm lead @ 50.0
5	5.89	UDL spans: 2, 4, 5 (Rt L = 5.7), 7; -->Tdm lead @ 55.2	UDL spans: 1, 3, 5 (Lt L = 5.7), 6, 8; -->Tdm lead @ 51.2
5	6.83	UDL spans: 2, 4, 5 (Rt L = 4.6), 7; -->Tdm laad @ 56.3	UDL spans: 1, 3, 5 (Lt L = 8.8), 6, 8; -->Tdm laad @ 52.3
5	7.96	UDL spans: 2, 4, 5 (Rt L = 3.4), 7; -->Tdm laad @ 53.5	UDL spans: 1, 3, 5 (Lt L = 8.0), 6, 8; -->Tdm lead @ 53.5
5	9.10	UDL spans: 2, 4, 5 (Rt L = 2.3), 7; -->Tdm lead @ 42.5	UDL spans: 1, 3, 5 (Lt L = 9.1), 6, 8; -->Tdm laad @ 54.8
5	10.24	UDL spans: 2, 4, 5 (Rt L = 1.1), 7; -->Tdm lead @ 42.5	UDL spans: 1, 3, 5 (Lt L = 10.2), 6, 8; -->Tdm laad @ 55.7
5	11.38	UDL spans: 2, 4, 7; -->Tdm lead @ 42.5	UDL spans: 1, 3, 5, 6, 8; -->Tdm lead @ 58.9
6	0.00	UDL spans: 1, 3, 5, 8, 8; -->Tdm lead @ 60.9	UDL spans: 2, 4, 7; -->Tdm lead @ 75.3
6	1.14	UDL spans: 1, 3, 5, 6 (Rt L = 10.2), 8; -->Tdm laad @ 62.0	UDL spans: 2, 4, 6 (Lt L = 1.1), 7; -->Tdm laad @ 75.3
6	2.28	UDL spans: 1, 3, 5, 8 (Rt L = 9.1), 8; -->Tdm lead @ 63.2	UDL spans: 2, 4, 8 (Lt L = 2.3), 7; -->Tdm lead @ 75.3
6	3.41	UDL spans: 1, 3, 5, 6 (Rt L = 8.0), 8; -->Tdm lead @ 64.3	UDL spans: 2, 4, 6 (Lt L = 3.4), 7; -->Tdm lead @ 84.3
6	4.55	UDL spans: 1, 3, 5, 6 (Rt L = 6.8), 8; -->Tdm lead @ 65.4	UDL spans: 2, 4, 6 (Lt L = 4.6), 7; -->Tdm laad @ 81.4
6	5.69	UDL spans: 1, 3, 5, 6 (Rt L = 5.7), 8; -->Tdm lead @ 66.6	UDL spans: 2, 4, 8 (Lt L = 5.7), 7; -->Tdm lead @ 62.6
6	6.83	UDL spans: 1, 3, 5, 6 (Rt L = 4.6), 8; -->Tdm laad @ 67.7	UDL spans: 2, 4, 8 (Lt L = 6.8), 7; -->Tdm laad @ 63.7
6	7.96	UDL spans: 1, 3, 5, 6 (Rt L = 3.4), 8; -->Tdm laad @ 64.8	UDL spans: 2, 4, 8 (Lt L = 8.0), 7; -->Tdm lead @ 64.8
6	9.10	UDL spans: 1, 3, 5, 6 (Rt L = 2.3), 8; -->Tdm lead @ 53.9	UDL spans: 2, 4, 6 (Lt L = 9.1), 7; -->Tdm lead @ 86.0
6	10.24	UDL spans: 1, 3, 5, 6 (Rt L = 1.1), 8; -->Tdm laad @ 53.9	UDL spans: 2, 4, 8 (Lt L = 10.2), 7; -->Tdm lead @ 67.1
6	11.38	UDL spans: 1, 3, 5, 8; -->Tdm laad @ 53.9	UDL spans: 2, 4, 8, 7; -->Tdm lead @ 68.2
7	0.00	UDL spans: 2, 4, 6, 7; -->Tdm laad @ 72.3	UDL spans: 1, 3, 5, 8; -->Tdm lead @ 87.1
7	1.14	UDL spans: 2, 4, 8, 7 (Rt L = 10.2); -->Tdm lead @ 73.4	UDL spans: 1, 3, 5, 7 (Lt L = 1.1), 8; -->Tdm lead @ 87.1
7	2.28	UDL spans: 2, 4, 8, 7 (Rt L = 9.1); -->Tdm lead @ 74.5	UDL spans: 1, 3, 5, 7 (Lt L = 2.3), 8; -->Tdm laad @ 87.1
7	3.41	UDL spans: 2, 4, 6, 7 (Rt L = 8.0); -->Tdm lead @ 75.7	UDL spans: 1, 3, 5, 7 (Lt L = 3.4), 8; -->Tdm lead @ 75.7
7	4.55	UDL spans: 2, 4, 6, 7 (Rt L = 6.8); -->Tdm laad @ 76.8	UDL spans: 1, 3, 5, 7 (Lt L = 4.6), 8; -->Tdm lead @ 72.8
7	5.69	UDL spans: 2, 4, 8, 7 (Rt L = 5.7); -->Tdm lead @ 77.9	UDL spans: 1, 3, 5, 7 (Lt L = 5.7), 8; -->Tdm lead @ 73.9
7	6.83	UDL spans: 2, 4, 8, 7 (Rt L = 4.8); -->Tdm lead @ 79.1	UDL spans: 1, 3, 5, 7 (Lt L = 8.8), 8; -->Tdm lead @ 75.1
7	7.96	UDL spans: 2, 4, 8, 7 (Rt L = 3.4); -->Tdm lead @ 78.2	UDL spans: 1, 3, 5, 7 (Lt L = 8.0), 8; -->Tdm lead @ 78.2
7	9.10	UDL spans: 2, 4, 6, 7 (Rt L = 2.3); -->Tdm laad @ 65.2	UDL spans: 1, 3, 5, 7 (Lt L = 9.1), 8; -->Tdm lead @ 77.3
7	10.24	UDL spans: 2, 4, 8, 7 (Rt L = 1.1); -->Tdm lead @ 65.2	UDL spans: 1, 3, 5, 7 (Lt L = 10.2), 8; -->Tdm lead @ 78.5
7	11.38	UDL spans: 2, 4, 6; -->Tdm lead @ 65.2	UDL spans: 1, 3, 5, 7, 8; -->Tdm lead @ 79.6
8	0.00	UDL spans: 1, 3, 5, 7, 8; -->Tdm laad @ 83.6	UDL spans: 2, 4, 8; -->Tdm lead @ 65.2
8	1.14	UDL spans: 1, 3, 5, 7, 8 (Rt L = 10.2); -->Tdm lead @ 84.8	UDL spans: 2, 4, 6, 8 (Lt L = 1.1); -->Tdm laad @ 84.8
8	2.28	UDL spans: 1, 3, 5, 7, 8 (Rt L = 9.1); -->Tdm lead @ 85.9	UDL spans: 2, 4, 6, 8 (Lt L = 2.3); -->Tdm lead @ 85.9
8	3.41	UDL spans: 1, 3, 5, 7, 8 (Rt L = 8.0); -->Tdm lead @ 87.0	UDL spans: 2, 4, 8, 8 (Lt L = 3.4); -->Tdm lead @ 87.0
8	4.55	UDL spans: 1, 3, 5, 7, 8 (Rt L = 6.8); -->Tdm lead @ 88.2	UDL spans: 2, 4, 8, 8 (Lt L = 4.6); -->Tdm lead @ 84.2
8	5.69	UDL spans: 1, 3, 5, 7, 8 (Rt L = 5.7); -->Tdm lead @ 89.3	UDL spans: 2, 4, 6, 8 (Lt L = 5.7); -->Tdm lead @ 85.3
8	6.83	UDL spans: 1, 3, 5, 7, 8 (Rt L = 4.6); -->Tdm lead @ 90.5	UDL spans: 2, 4, 6, 8 (Lt L = 6.8); -->Tdm lead @ 86.4
8	7.96	UDL spans: 1, 3, 5, 7, 8 (Rt L = 3.4); -->Tdm lead @ 87.6	UDL spans: 2, 4, 8, 8 (Lt L = 8.0); -->Tdm lead @ 87.6
8	9.10	UDL spans: 1, 3, 5, 7, 8 (Rt L = 2.3); -->Tdm laad @ 88.7	UDL spans: 2, 4, 6, 8 (Lt L = 9.1); -->Tdm laad @ 88.7
8	10.24	UDL spans: 1, 3, 5, 7, 8 (Rt L = 1.1); -->Tdm lead @ 76.6	UDL spans: 2, 4, 6, 8 (Lt L = 10.2); -->Tdm lead @ 89.9
8	11.38	UDL spans: 1, 3, 5, 7; -->Tdm lead @ 76.6	UDL spans: 2, 4, 6, 8; -->Tdm lead @ 91.0

Max LL Moments - Critical Case Desription

Span	X	(+)Moments	(-)Moments
1	0.00	N/A	N/A
1	1.14	UDL spans: 1, 3, 5, 7; -->Tdm laad @ 5.1	UDL spans: 2, 4, 6, 8; -->Tdm laad @ 18.1
1	2.28	UDL spans: 1, 3, 5, 7; -->Tdm lead @ 6.3	UDL spans: 2, 4, 6, 8; -->Tdm lead @ 18.1
1	3.41	UDL spans: 1, 3, 5, 7; -->Tdm lead @ 7.4	UDL spans: 2, 4, 8, 8; -->Tdm lead @ 18.1
1	4.55	UDL spans: 1, 3, 5, 7; -->Tdm laad @ 8.6	UDL spans: 2, 4, 6, 8; -->Tdm lead @ 18.1
1	5.69	UDL spans: 1, 3, 5, 7; -->Tdm lead @ 5.7	UDL spans: 2, 4, 6, 8; -->Tdm lead @ 18.1
1	6.83	UDL spans: 1, 3, 5, 7; -->Tdm lead @ 6.8	UDL spans: 2, 4, 6, 8; -->Tdm laad @ 18.1
1	7.96	UDL spans: 1, 3, 5, 7; -->Tdm lead @ 8.0	UDL spans: 2, 4, 8, 8; -->Tdm lead @ 18.1

1	9.10	UDL spans: 1 (Rt L = 8.4), 3, 5, 7; -->Tdm lead @ 9.1	UDL spans: 1 (Lt L = 2.9), 2, 4, 6, 8; -->Tdm lead @ 18.1
1	10.24	UDL spans: 1 (Rt L = 2.7), 3, 5, 7; -->Tdm lead @ 10.2	UDL spans: 1 (Lt L = 8.7), 2, 4, 6, 8; -->Tdm lead @ 18.1
1	11.38	UDL spans: 3, 5, 7; -->Tdm laad @ 29.8	UDL spans: 1, 2, 4, 6, 8; -->Tdm laad @ 8.2
2	0.00	UDL spans: 3, 5, 7; -->Tdm lead @ 29.8	UDL spans: 1, 2, 4, 6, 8; -->Tdm lead @ 8.2
2	1.14	UDL spans: 2 (Lt L = 3.2), 3, 5, 7; -->Tdm laad @ 12.5	UDL spans: 1, 2 (Rt L = 8.2), 4, 6, 8; -->Tdm laad @ 8.2
2	2.28	UDL spans: 2, 3; -->Tdm lead @ 17.7	UDL spans: 1, 4, 5, 6, 7, 8; -->Tdm laad @ 8.2
2	3.41	UDL spans: 2, 4, 8, 8; -->Tdm laad @ 18.8	UDL spans: 1, 3, 5, 7; -->Tdm lead @ 8.2
2	4.55	UDL spans: 2, 4, 8, 8; -->Tdm lead @ 19.9	UDL spans: 1, 3, 5, 7; -->Tdm laad @ 8.2
2	5.69	UDL spans: 2, 4, 8, 8; -->Tdm lead @ 17.1	UDL spans: 1, 3, 5, 7; -->Tdm laad @ 8.2
2	6.83	UDL spans: 2, 4, 6, 8; -->Tdm lead @ 18.2	UDL spans: 1, 3, 5, 7; -->Tdm lead @ 29.4
2	7.96	UDL spans: 2, 4, 6, 8; -->Tdm lead @ 19.3	UDL spans: 1, 3, 5, 7; -->Tdm laad @ 29.4
2	9.10	UDL spans: 1, 2 (Rt L = 8.9), 4, 6, 8; -->Tdm lead @ 20.5	UDL spans: 2 (Lt L = 2.4), 3, 5, 7; -->Tdm laad @ 29.4
2	10.24	UDL spans: 1, 2 (Rt L = 2.9), 4, 6, 8; -->Tdm laad @ 21.6	UDL spans: 2 (Lt L = 8.5), 3, 5, 7; -->Tdm lead @ 29.4
2	11.38	UDL spans: 1, 4, 8, 8; -->Tdm lead @ 7.9	UDL spans: 2, 3, 5, 7; -->Tdm laad @ 19.8
3	0.00	UDL spans: 1, 4, 6, 8; -->Tdm lead @ 7.9	UDL spans: 2, 3, 5, 7; -->Tdm lead @ 19.8
3	1.14	UDL spans: 1, 3 (Lt L = 2.9), 4, 6, 8; -->Tdm laad @ 23.9	UDL spans: 2, 3 (Rt L = 8.4), 5, 7; -->Tdm lead @ 19.8
3	2.28	UDL spans: 1, 3 (Lt L = 9.1), 4, 6, 8; -->Tdm laad @ 29.0	UDL spans: 2, 3 (Rt L = 2.3), 5, 7; -->Tdm lead @ 19.8
3	3.41	UDL spans: 1, 3, 5, 7; -->Tdm lead @ 30.2	UDL spans: 2, 4, 6, 8; -->Tdm lead @ 19.8
3	4.55	UDL spans: 1, 3, 5, 7; -->Tdm lead @ 31.3	UDL spans: 2, 4, 6, 8; -->Tdm lead @ 19.8
3	5.69	UDL spans: 1, 3, 5, 7; -->Tdm laad @ 28.4	UDL spans: 2, 4, 6, 8; -->Tdm laad @ 19.8
3	6.83	UDL spans: 1, 3, 5, 7; -->Tdm lead @ 29.6	UDL spans: 2, 4, 6, 8; -->Tdm lead @ 40.8
3	7.96	UDL spans: 1, 3, 5, 7; -->Tdm lead @ 30.7	UDL spans: 2, 4, 6, 8; -->Tdm laad @ 40.8
3	9.10	UDL spans: 2, 3 (Rt L = 9.0), 5, 7; -->Tdm lead @ 31.9	UDL spans: 1, 3 (Lt L = 2.4), 4, 6, 8; -->Tdm lead @ 40.8
3	10.24	UDL spans: 2, 3 (Rt L = 2.9), 5, 7; -->Tdm lead @ 33.0	UDL spans: 1, 3 (Lt L = 8.4), 4, 6, 8; -->Tdm lead @ 40.8
3	11.38	UDL spans: 2, 5, 7; -->Tdm lead @ 19.7	UDL spans: 1, 3, 4, 6, 8; -->Tdm lead @ 31.4
4	0.00	UDL spans: 2, 5, 7; -->Tdm lead @ 19.7	UDL spans: 1, 3, 4, 6, 8; -->Tdm laad @ 31.4
4	1.14	UDL spans: 2, 4 (Lt L = 2.9), 5, 7; -->Tdm laad @ 35.3	UDL spans: 1, 3, 4 (Rt L = 8.4), 6, 8; -->Tdm lead @ 31.4
4	2.28	UDL spans: 2, 4 (Lt L = 9.0), 5, 7; -->Tdm lead @ 40.4	UDL spans: 1, 3, 4 (Rt L = 2.4), 6, 8; -->Tdm lead @ 31.4
4	3.41	UDL spans: 2, 4, 6, 8; -->Tdm lead @ 41.5	UDL spans: 1, 3, 5, 7; -->Tdm laad @ 31.4
4	4.55	UDL spans: 2, 4, 8, 8; -->Tdm lead @ 42.7	UDL spans: 1, 3, 5, 7; -->Tdm laad @ 31.4
4	5.69	UDL spans: 2, 4, 6, 8; -->Tdm laad @ 39.8	UDL spans: 1, 3, 5, 7; -->Tdm lead @ 31.4
4	6.83	UDL spans: 2, 4, 6, 8; -->Tdm lead @ 41.0	UDL spans: 1, 3, 5, 7; -->Tdm lead @ 52.2
4	7.96	UDL spans: 2, 4, 6, 8; -->Tdm lead @ 42.1	UDL spans: 1, 3, 5, 7; -->Tdm lead @ 52.2
4	9.10	UDL spans: 1, 3, 4 (Rt L = 9.0), 6, 8; -->Tdm lead @ 43.2	UDL spans: 2, 4 (Lt L = 2.4), 5, 7; -->Tdm laad @ 52.2
4	10.24	UDL spans: 1, 3, 4 (Rt L = 2.9), 8, 8; -->Tdm lead @ 44.4	UDL spans: 2, 4 (Lt L = 8.4), 5, 7; -->Tdm lead @ 52.2
4	11.38	UDL spans: 1, 3, 6, 8; -->Tdm lead @ 31.1	UDL spans: 2, 4, 5, 7; -->Tdm lead @ 42.8
5	0.00	UDL spans: 1, 3, 6, 8; -->Tdm laad @ 31.1	UDL spans: 2, 4, 5, 7; -->Tdm lead @ 42.8
5	1.14	UDL spans: 1, 3, 5 (Lt L = 2.9), 6, 8; -->Tdm lead @ 48.6	UDL spans: 2, 4, 5 (Rt L = 8.4), 7; -->Tdm laad @ 42.8
5	2.28	UDL spans: 1, 3, 5 (Lt L = 9.0), 6, 8; -->Tdm laad @ 51.8	UDL spans: 2, 4, 5 (Rt L = 2.4), 7; -->Tdm lead @ 42.8
5	3.41	UDL spans: 1, 3, 5, 7; -->Tdm lead @ 52.9	UDL spans: 2, 4, 8, 8; -->Tdm lead @ 42.8
5	4.55	UDL spans: 1, 3, 5, 7; -->Tdm laad @ 54.1	UDL spans: 2, 4, 6, 8; -->Tdm laad @ 42.8
5	5.69	UDL spans: 1, 3, 5, 7; -->Tdm laad @ 55.2	UDL spans: 2, 4, 6, 8; -->Tdm lead @ 83.6
5	6.83	UDL spans: 1, 3, 5, 7; -->Tdm laad @ 52.3	UDL spans: 2, 4, 6, 8; -->Tdm laad @ 83.6
5	7.96	UDL spans: 1, 3, 5, 7; -->Tdm lead @ 53.5	UDL spans: 2, 4, 6, 8; -->Tdm lead @ 83.8
5	9.10	UDL spans: 2, 4, 5 (Rt L = 9.0), 7; -->Tdm laad @ 54.6	UDL spans: 1, 3, 5 (Lt L = 2.4), 6, 8; -->Tdm lead @ 63.6
5	10.24	UDL spans: 2, 4, 5 (Rt L = 2.9), 7; -->Tdm lead @ 55.7	UDL spans: 1, 3, 5 (Lt L = 8.4), 6, 8; -->Tdm lead @ 63.8
5	11.38	UDL spans: 2, 4, 7; -->Tdm lead @ 75.3	UDL spans: 1, 3, 5, 6, 8; -->Tdm lead @ 63.6
6	0.00	UDL spans: 2, 4, 7; -->Tdm lead @ 75.3	UDL spans: 1, 3, 5, 6, 8; -->Tdm lead @ 83.8
6	1.14	UDL spans: 2, 4, 8 (Lt L = 2.9), 7; -->Tdm lead @ 58.0	UDL spans: 1, 3, 5, 6 (Rt L = 8.4), 8; -->Tdm lead @ 54.2
6	2.28	UDL spans: 2, 4, 8 (Lt L = 9.0), 7; -->Tdm lead @ 63.2	UDL spans: 1, 3, 5, 6 (Rt L = 2.4), 8; -->Tdm lead @ 54.2
6	3.41	UDL spans: 2, 4, 6, 8; -->Tdm lead @ 64.3	UDL spans: 1, 3, 5, 7; -->Tdm lead @ 54.2
8	4.55	UDL spans: 2, 4, 6, 8; -->Tdm lead @ 65.4	UDL spans: 1, 3, 5, 7; -->Tdm lead @ 54.2
6	5.69	UDL spans: 2, 4, 6, 8; -->Tdm lead @ 66.6	UDL spans: 1, 3, 5, 7; -->Tdm lead @ 75.2
6	6.83	UDL spans: 2, 4, 6, 8; -->Tdm lead @ 63.7	UDL spans: 1, 3, 5, 7; -->Tdm lead @ 75.2
6	7.96	UDL spans: 2, 4, 6, 8; -->Tdm laad @ 64.8	UDL spans: 1, 3, 5, 7; -->Tdm lead @ 75.2
6	9.10	UDL spans: 1, 3, 5, 6 (Rt L = 9.1), 8; -->Tdm lead @ 68.0	UDL spans: 2, 4, 6 (Lt L = 2.3), 7; -->Tdm lead @ 75.2
8	10.24	UDL spans: 1, 3, 5, 6 (Rt L = 3.0), 8; -->Tdm lead @ 67.1	UDL spans: 2, 4, 6 (Lt L = 8.4), 7; -->Tdm laad @ 75.2
6	11.38	UDL spans: 1, 3, 5, 8; -->Tdm laad @ 87.1	UDL spans: 2, 4, 6, 7; -->Tdm lead @ 75.2
7	0.00	UDL spans: 1, 3, 5, 8; -->Tdm lead @ 87.1	UDL spans: 2, 4, 8, 7; -->Tdm lead @ 75.2
7	1.14	UDL spans: 1, 3, 5, 7 (Lt L = 2.9), 8; -->Tdm lead @ 69.4	UDL spans: 2, 4, 6, 7 (Rt L = 8.5); -->Tdm lead @ 65.6
7	2.28	UDL spans: 1, 3, 5, 7 (Lt L = 8.9), 8; -->Tdm lead @ 74.5	UDL spans: 2, 4, 6, 7 (Rt L = 2.4); -->Tdm lead @ 65.6
7	3.41	UDL spans: 1, 3, 5, 7; -->Tdm laad @ 75.7	UDL spans: 2, 4, 6, 8; -->Tdm laad @ 65.6
7	4.55	UDL spans: 1, 3, 5, 7; -->Tdm lead @ 76.8	UDL spans: 2, 4, 6, 8; -->Tdm lead @ 65.6
7	5.69	UDL spans: 1, 3, 5, 7; -->Tdm laad @ 77.9	UDL spans: 2, 4, 6, 8; -->Tdm lead @ 86.8
7	8.83	UDL spans: 1, 3, 5, 7; -->Tdm laad @ 75.1	UDL spans: 2, 4, 6, 8; -->Tdm lead @ 86.8
7	7.96	UDL spans: 1, 3, 5, 7; -->Tdm laad @ 76.2	UDL spans: 2, 4, 6, 8; -->Tdm lead @ 86.8
7	9.10	UDL spans: 1, 3, 5, 7; -->Tdm lead @ 77.4	UDL spans: 2, 4, 6, 8; -->Tdm lead @ 86.8
7	10.24	UDL spans: 2, 4, 6, 7 (Rt L = 3.2); -->Tdm lead @ 78.5	UDL spans: 1, 3, 5, 7 (Lt L = 8.2), 8; -->Tdm lead @ 86.8
7	11.38	UDL spans: 2, 4, 6; -->Tdm lead @ 65.2	UDL spans: 1, 3, 5, 7, 8; -->Tdm lead @ 88.8
8	0.00	UDL spans: 2, 4, 8; -->Tdm lead @ 65.2	UDL spans: 1, 3, 5, 7, 8; -->Tdm lead @ 88.8
8	1.14	UDL spans: 2, 4, 8, 8 (Lt L = 2.7); -->Tdm laad @ 80.8	UDL spans: 1, 3, 5, 7, 8 (Rt L = 8.7); -->Tdm lead @ 76.9

8	2.28	*UDL spans: 2, 4, 6, 8 (Lt L = 8.4); -->Tdm lead @ 85.9*	*UDL spens: 1, 3, 5, 7, 8 (Rt L = 2.9); -->Tdm leed @ 76.9*
8	3.41	*UDL spans: 2, 4, 6, 8; -->Tdm leed @ 87.0*	*UDL spans: 1, 3, 5, 7; -->Tdm lead @ 76.9*
8	4.55	*UDL spans: 2, 4, 8, 8; -->Tdm leed @ 88.2*	*UDL spans: 1, 3, 5, 7; -->Tdm leed @ 76.9*
8	5.69	*UDL spans: 2, 4, 8, 8; -->Tdm lead @ 89.3*	*UDL spans: 1, 3, 5, 7; -->Tdm lead @ 76.9*
8	8.83	*UDL spans: 2, 4, 6, 8; -->Tdm leed @ 86.5*	*UDL spens: 1, 3, 5, 7; -->Tdm lead @ 76.9*
8	7.96	*UDL spens: 2, 4, 6, 8; -->Tdm lead @ 87.6*	*UDL spens: 1, 3, 5, 7; -->Tdm lead @ 76.9*
8	9.10	*UDL spans: 2, 4, 8, 8; -->Tdm leed @ 88.7*	*UDL spans: 1, 3, 5, 7; -->Tdm leed @ 76.9*
8	10.24	*UDL spans: 2, 4, 8, 8; -->Tdm leed @ 89.9*	*UDL spans: 1, 3, 5, 7; -->Tdm lead @ 76.9*
8	11.38	*N/A*	*N/A*

VQ-093
Rutland, VT
Steel Truss Bridge

Left Edge Strip
Dead Loads

Analysis ID = 4

Loading Type: Stationary		Units				
Modulus of Elasticity (E)		Force	Length			
		All input parameters must be in consistent units. Output values are in the same units as input.	Units used to specify span L are considered master units. Master units are used for all input and output data except parameters on the right are in sub units. Specify number of sub units per one master unit in the Master/Sub field (e.g. 1000 for m/mm or 12 for ft/in).		Parameter	Master/Sub
$E = Eo \times 10^x$					$I_{(sub^4)}$	1
					$E_{(force/sub^2)}$	1
					$Settl._{(sub)}$	1
Eo =	1	Force Unit Name: kip	Master Length Unit Name:	feet	$Defl._{(sub)}$	1
x =	1	Note: Force and master length unit names above have no effect on analysis and are for information only				

	Supports									
	Supp 1	Supp 2	Supp 3	Supp 4	Supp 5	Supp 6	Supp 7	Supp 8	Supp 9	Supp 10
Type	pin	pin	pin	pin	pin	pin	pin	pin	pin	
Settlement										

		Spans								
		Span 1	Span 2	Span 3	Span 4	Span 5	Span 6	Span 7	Span 8	Span 9
Segment 1	L	11.375	11.375	11.375	11.375	11.375	11.375	11.375	11.375	
	I	1	1	1	1	1	1	1	1	
Segment 2	L									
	I									
Segment 3	L									
	I									
Segment 4	L									
	I									
Segment 5	L									
	I									
Segment 6	L									
	I									
Segment 7	L									
	I									
Segment 8	L									
	I									
Segment 9	L									
	I									
Segment 10	L									
	I									
Segment 11	L									
	I									
Segment 12	L									
	I									
Segment 13	L									
	I									
	Span L =	11.375	11.375	11.375	11.375	11.375	11.375	11.375	11.375	0

	Distributed Loads									
	Loading 1	Loading 2	Loading 3	Loading 4	Loading 5	Loading 6	Loading 7	Loading 8	Loading 9	Loading 10
x	0									
L	91									
w1	0.55									
w2	0.55									

		P-Loads								
		Span 1	Span 2	Span 3	Span 4	Span 5	Span 6	Span 7	Span 8	Span 9
Loading 1	x									
	P									
Loading 2	x									
	P									
Loading 3	x									

	P									
Loading 4	x									
	P									
Loading 5	x									
	P									
Loading 6	x									
	P									
Loading 7	x									
	P									
Loading 8	x									
	P									
Loading 9	x									
	P									
Loading 10	x									
	P									

		M-Loads								
		Span 1	Span 2	Span 3	Span 4	Span 5	Span 6	Span 7	Span 8	Span 9
Loading 1	x									
	M									
Loading 2	x									
	M									
Loading 3	x									
	M									
Loading 4	x									
	M									
Loading 5	x									
	M									

Support Reactions & Rotations

	Sup 1	Sup 2	Sup 3	Sup 4	Sup 5	Sup 6	Sup 7	Sup 8	Sup 9
Mom R	n/a	n/a	n/a	n/a	n/a	n/a	n/a	n/a	n/a
Vert R	2.5	7.1	6.0	6.3	6.2	6.3	6.0	7.1	2.5
Rotation	-1.94725	0.52159	-0.13909	0.03477	0.00000	-0.03477	0.13909	-0.52159	1.94725

Moments and Shears

Span	X	Shear	Moment	
1	0.00	2.5	0.0	*supp 1*
1	1.14	1.8	2.5	*pt 0.1*
1	2.28	1.2	4.2	*pt 0.2*
1	3.41	0.6	5.2	*pt 0.3*
1	4.49	0.0	5.5	*seg 1 (+)Mmax*
1	4.55	0.0	5.5	*pt 0.4*
1	5.69	-0.7	5.1	*pt 0.5*
1	6.83	-1.3	4.0	*pt 0.6*
1	7.96	-1.9	2.2	*pt 0.7*
1	9.10	-2.5	-0.3	*pt 0.8*
1	10.24	-3.2	-3.6	*pt 0.9*
1	11.38	-3.8	-7.5	*supp 2*
2	0.00	3.3	-7.5	*supp 2*
2	1.14	2.7	-4.1	*pt 0.1*
2	2.28	2.1	-1.4	*pt 0.2*
2	3.41	1.4	0.6	*pt 0.3*
2	4.55	0.8	1.8	*pt 0.4*
2	5.69	0.2	2.4	*pt 0.5*
2	6.01	0.0	2.4	*seg 1 (+)Mmax*
2	6.83	-0.4	2.2	*pt 0.6*
2	7.96	-1.1	1.4	*pt 0.7*
2	9.10	-1.7	-0.2	*pt 0.8*
2	10.24	-2.3	-2.5	*pt 0.9*
2	11.38	-3.0	-5.5	*supp 3*
3	0.00	3.1	-5.5	*supp 3*
3	1.14	2.5	-2.4	*pt 0.1*
3	2.28	1.8	0.1	*pt 0.2*
3	3.41	1.2	1.8	*pt 0.3*
3	4.55	0.6	2.8	*pt 0.4*
3	5.60	0.0	3.1	*seg 1 (+)Mmax*

3	5.69	0.0	3.1	*pt 0.5*
3	6.83	-0.7	2.7	*pt 0.6*
3	7.98	-1.3	1.8	*pt 0.7*
3	9.10	-1.9	-0.2	*pt 0.8*
3	10.24	-2.6	-2.8	*pt 0.9*
3	11.38	-3.2	-6.1	*supp 4*
4	0.00	3.1	-6.1	*supp 4*
4	1.14	2.5	-2.8	*pt 0.1*
4	2.28	1.9	-0.3	*pt 0.2*
4	3.41	1.3	1.5	*pt 0.3*
4	4.55	0.6	2.6	*pt 0.4*
4	5.69	0.0	2.9	*pt 0.5*
4	5.72	0.0	2.9	*seg 1 (+)Mmax*
4	8.83	-0.6	2.6	*pt 0.6*
4	7.96	-1.2	1.5	*pt 0.7*
4	9.10	-1.9	-0.2	*pt 0.8*
4	10.24	-2.5	-2.7	*pt 0.9*
4	11.38	-3.1	-5.9	*supp 5*
5	0.00	3.1	-5.9	*supp 5*
5	1.14	2.5	-2.7	*pt 0.1*
5	2.28	1.9	-0.2	*pt 0.2*
5	3.41	1.2	1.5	*pt 0.3*
5	4.55	0.6	2.6	*pt 0.4*
5	5.66	0.0	2.9	*seg 1 (+)Mmax*
5	5.69	0.0	2.9	*pt 0.5*
5	6.83	-0.6	2.8	*pt 0.6*
5	7.96	-1.3	1.5	*pt 0.7*
5	9.10	-1.9	-0.3	*pt 0.8*
5	10.24	-2.5	-2.8	*pt 0.9*
5	11.38	-3.1	-6.1	*supp 6*
6	0.00	3.2	-6.1	*supp 6*
6	1.14	2.6	-2.8	*pt 0.1*
6	2.28	1.9	-0.2	*pt 0.2*
6	3.41	1.3	1.6	*pt 0.3*
6	4.55	0.7	2.7	*pt 0.4*
8	5.69	0.0	3.1	*pt 0.5*
6	5.78	0.0	3.1	*seg 1 (+)Mmax*
6	6.83	-0.6	2.8	*pt 0.6*
6	7.96	-1.2	1.8	*pt 0.7*
6	9.10	-1.8	0.1	*pt 0.8*
6	10.24	-2.5	-2.4	*pt 0.9*
6	11.38	-3.1	-5.5	*supp 7*
7	0.00	3.0	-5.5	*supp 7*
7	1.14	2.3	-2.5	*pt 0.1*
7	2.28	1.7	-0.2	*pt 0.2*
7	3.41	1.1	1.4	*pt 0.3*
7	4.55	0.4	2.2	*pt 0.4*
7	5.37	0.0	2.4	*seg 1 (+)Mmax*
7	5.69	-0.2	2.4	*pt 0.5*
7	6.83	-0.8	1.8	*pt 0.8*
7	7.96	-1.4	0.6	*pt 0.7*
7	9.10	-2.1	-1.4	*pt 0.8*
7	10.24	-2.7	-4.1	*pt 0.9*
7	11.38	-3.3	-7.5	*supp 8*
8	0.00	3.8	-7.5	*supp 8*
8	1.14	3.2	-3.6	*pt 0.1*
8	2.28	2.5	-0.3	*pt 0.2*
8	3.41	1.9	2.2	*pt 0.3*
8	4.55	1.3	4.0	*pt 0.4*
8	5.69	0.7	5.1	*pt 0.5*
8	8.83	0.0	5.5	*pt 0.6*
8	6.89	0.0	5.5	*seg 1 (+)Mmax*
8	7.96	-0.6	5.2	*pt 0.7*
8	9.10	-1.2	4.2	*pt 0.8*
8	10.24	-1.8	2.5	*pt 0.9*
8	11.38	-2.5	0.0	*supp 9*

FST

PROJECT Rutland, VT

PROJECT NUMBER VQ-093

SUBJECT Steel Truss Bridge Pedestrian Sidewalk

SHEET NUMBER 16

DATE 11/4/14

COMPUTED BY MAB

CHECKED BY TD

Pedestrian Live Load on left edge.

$= (28.1\,in - 18\,in)\,(12\,in/ft)(0.085\,ksf) = 0.072\,klf$

Note that the wheel loads produce moments + shears much larger than the 85 PSF Pedestrian Loads.

- Axle Loads Control.

VQ-093
Rutland, VT
Steel Truss Bridge

Left Edge Strip
Pedestrian Live Load
I = 1.0

1 of 3

17

Analysis ID = 4

Loading Type: Stationary		Units				
Modulus of Elasticity (E)		Force	Length			
		All input parameters must be in consistent units. Output values are in the same units as input.	Units used to specify span L are considered master units. Master units are used for all input and output data except parameters on the right are in sub units. Specify number of sub units per one master unit in the Master/Sub field (e.g. 1000 for m/mm or 12 for ft/in).		Parameter	Master/Sub
					I (sub^4)	1
$E = Eo \times 10^x$					E (force/sub^2)	1
					Sett. (sub)	1
Eo =	1	Force Unit Name: kip	Master Length Unit Name:	feet	Defl. (sub)	1
x =	1	Note: Force and master length unit names above have no affect on analysis and are for information only				

	Supports									
	Supp 1	Supp 2	Supp 3	Supp 4	Supp 5	Supp 6	Supp 7	Supp 8	Supp 9	Supp 10
Type	pin	pin	pin	pin	pin	pin	pin	pin	pin	
Settlement										

		Spans								
		Span 1	Span 2	Span 3	Span 4	Span 5	Span 6	Span 7	Span 8	Span 9
Segment 1	L	11.375	11.375	11.375	11.375	11.375	11.375	11.375	11.375	
	I	1	1	1	1	1	1	1	1	
Segment 2	L									
	I									
Segment 3	L									
	I									
Segment 4	L									
	I									
Segment 5	L									
	I									
Segment 6	L									
	I									
Segment 7	L									
	I									
Segment 8	L									
	I									
Segment 9	L									
	I									
Segment 10	L									
	I									
Segment 11	L									
	I									
Segment 12	L									
	I									
Segment 13	L									
	I									
Span L =		11.375	11.375	11.375	11.375	11.375	11.375	11.375	11.375	0

	Distributed Loads									
	Loading 1	Loading 2	Loading 3	Loading 4	Loading 5	Loading 6	Loading 7	Loading 8	Loading 9	Loading 10
x	0									
L	91									
w1	0.072									
w2	0.072									

		P-Loads								
		Span 1	Span 2	Span 3	Span 4	Span 5	Span 6	Span 7	Span 8	Span 9
Loading 1	x									
	P									
Loading 2	x									
	P									
Loading 3	x									

18

2 of 3

Loading 3	P									
Loading 4	x									
	P									
Loading 5	x									
	P									
Loading 6	x									
	P									
Loading 7	x									
	P									
Loading 8	x									
	P									
Loading 9	x									
	P									
Loading 10	x									
	P									

		M-Loads								
		Span 1	Span 2	Span 3	Span 4	Span 5	Span 6	Span 7	Span 8	Span 9
Loading 1	x									
	M									
Loading 2	x									
	M									
Loading 3	x									
	M									
Loading 4	x									
	M									
Loading 5	x									
	M									

Support Reactions & Rotations

	Sup 1	Sup 2	Sup 3	Sup 4	Sup 5	Sup 6	Sup 7	Sup 8	Sup 9
Mom R	n/a	n/a	n/a	n/a	n/a	n/a	n/a	n/a	n/a
Vert R	0.3	0.9	0.8	0.8	0.8	0.8	0.8	0.9	0.3
Rotation	-0.25491	0.06828	-0.01821	0.00455	0.00000	-0.00455	0.01821	-0.06828	0.25491

Moments and Shears

Span	X	Shear	Moment	
1	0.00	0.3	0.0	*supp 1*
1	1.14	0.2	0.3	*pt 0.1*
1	2.28	0.2	0.5	*pt 0.2*
1	3.41	0.1	0.7	*pt 0.3*
1	4.49	0.0	0.7	*seg 1 (+)Mmax*
1	4.55	0.0	0.7	*pt 0.4*
1	5.69	-0.1	0.7	*pt 0.5*
1	6.83	-0.2	0.5	*pt 0.6*
1	7.96	-0.3	0.3	*pt 0.7*
1	9.10	-0.3	0.0	*pt 0.8*
1	10.24	-0.4	-0.5	*pt 0.9*
1	11.38	-0.5	-1.0	*supp 2*
2	0.00	0.4	-1.0	*supp 2*
2	1.14	0.4	-0.5	*pt 0.1*
2	2.28	0.3	-0.2	*pt 0.2*
2	3.41	0.2	0.1	*pt 0.3*
2	4.55	0.1	0.2	*pt 0.4*
2	5.69	0.0	0.3	*pt 0.5*
2	8.01	0.0	0.3	*seg 1 (+)Mmax*
2	6.83	-0.1	0.3	*pt 0.6*
2	7.96	-0.1	0.2	*pt 0.7*
2	9.10	-0.2	0.0	*pt 0.8*
2	10.24	-0.3	-0.3	*pt 0.9*
2	11.38	-0.4	-0.7	*supp 3*
3	0.00	0.4	-0.7	*supp 3*
3	1.14	0.3	-0.3	*pt 0.1*
3	2.28	0.2	0.0	*pt 0.2*
3	3.41	0.2	0.2	*pt 0.3*
3	4.55	0.1	0.4	*pt 0.4*
3	5.60	0.0	0.4	*seg 1 (+)Mmax*

3 of 3

19

3	5.69	0.0	0.4	*pt 0.5*
3	6.83	-0.1	0.4	*pt 0.6*
3	7.96	-0.2	0.2	*pt 0.7*
3	9.10	-0.3	0.0	*pt 0.8*
3	10.24	-0.3	-0.4	*pt 0.9*
3	11.38	-0.4	-0.8	*supp 4*
4	0.00	0.4	-0.8	*supp 4*
4	1.14	0.3	-0.4	*pt 0.1*
4	2.28	0.2	0.0	*pt 0.2*
4	3.41	0.2	0.2	*pt 0.3*
4	4.55	0.1	0.3	*pt 0.4*
4	5.89	0.0	0.4	*pt 0.5*
4	5.72	0.0	0.4	*seg 1 (+)Mmax*
4	6.83	-0.1	0.3	*pt 0.6*
4	7.96	-0.2	0.2	*pt 0.7*
4	9.10	-0.2	0.0	*pt 0.8*
4	10.24	-0.3	-0.4	*pt 0.9*
4	11.38	-0.4	-0.8	*supp 5*
5	0.00	0.4	-0.8	*supp 5*
5	1.14	0.3	-0.4	*pt 0.1*
5	2.28	0.2	0.0	*pt 0.2*
5	3.41	0.2	0.2	*pt 0.3*
5	4.55	0.1	0.3	*pt 0.4*
5	5.66	0.0	0.4	*seg 1 (+)Mmax*
5	5.69	0.0	0.4	*pt 0.5*
5	6.83	-0.1	0.3	*pt 0.6*
5	7.96	-0.2	0.2	*pt 0.7*
5	9.10	-0.2	0.0	*pt 0.8*
5	10.24	-0.3	-0.4	*pt 0.9*
5	11.38	-0.4	-0.8	*supp 6*
6	0.00	0.4	-0.8	*supp 6*
6	1.14	0.3	-0.4	*pt 0.1*
6	2.28	0.3	0.0	*pt 0.2*
6	3.41	0.2	0.2	*pt 0.3*
6	4.55	0.1	0.4	*pt 0.4*
6	5.69	0.0	0.4	*pt 0.5*
6	5.78	0.0	0.4	*seg 1 (+)Mmax*
6	6.83	-0.1	0.4	*pt 0.6*
6	7.96	-0.2	0.2	*pt 0.7*
6	9.10	-0.2	0.0	*pt 0.8*
6	10.24	-0.3	-0.3	*pt 0.9*
6	11.38	-0.4	-0.7	*supp 7*
7	0.00	0.4	-0.7	*supp 7*
7	1.14	0.3	-0.3	*pt 0.1*
7	2.28	0.2	0.0	*pt 0.2*
7	3.41	0.1	0.2	*pt 0.3*
7	4.55	0.1	0.3	*pt 0.4*
7	5.37	0.0	0.3	*seg 1 (+)Mmax*
7	5.69	0.0	0.3	*pt 0.5*
7	6.83	-0.1	0.2	*pt 0.8*
7	7.96	-0.2	0.1	*pt 0.7*
7	9.10	-0.3	-0.2	*pt 0.8*
7	10.24	-0.4	-0.5	*pt 0.9*
7	11.38	-0.4	-1.0	*supp 8*
8	0.00	0.5	-1.0	*supp 8*
8	1.14	0.4	-0.5	*pt 0.1*
8	2.28	0.3	0.0	*pt 0.2*
8	3.41	0.3	0.3	*pt 0.3*
8	4.55	0.2	0.5	*pt 0.4*
8	5.69	0.1	0.7	*pt 0.5*
8	6.83	0.0	0.7	*pt 0.6*
8	6.89	0.0	0.7	*seg 1 (+)Mmax*
8	7.98	-0.1	0.7	*pt 0.7*
8	9.10	-0.2	0.5	*pt 0.8*
8	10.24	-0.2	0.3	*pt 0.9*
8	11.38	-0.3	0.0	*supp 9*

FST

PROJECT Rutland, VT

SUBJECT Steel T truss Bridge
Pedestrian Sidewalk -

PROJECT NUMBER VQ-093
SHEET NUMBER
DATE 1/30/15
COMPUTED BY MAB
CHECKED BY TD

STRENGTH I

Max Shear occurs @ the first interior Support

$V_{LL} = 4.4\,K$
$V_{DL} = 3.8\,K$

$d_v = 0.72h = (0.72)(7in) = 5.0in$

$b_v = 28.1\,in$

$\phi = 0.9$

$\phi V_c = (0.9)(0.0316)(2)\sqrt{4ksi}\,(28.1in)(5.0in)$

$\phi V_c = 16.0\,K$

$V_u = (1.75)(4.4k) + (3.8k)(1.25)$

$V_u = 12.5k$

$\phi V_c > V_u$ OK for shear.

FST

PROJECT Rutland, VT

SUBJECT STW Truss Bridge Pedestrian Slab

PROJECT NUMBER VG-093

SHEET NUMBER

DATE 1/30/15

COMPUTED BY MAB

CHECKED BY TD

AASHTO LRFD 6th 5.7.3.3.2

$M_{cr} = \gamma_3 \gamma_1 f_r S_c$

$\gamma_3 = 0.67$ $\qquad f_r = 0.24\sqrt{f'_c} = 0.48\,ksi$

$\gamma_1 = 1.6$

$S_c = (\frac{1}{6})(28.1\,in)(7.0\,in)^2 = 229.5\,in^3$

$M_{cr} = (0.67)(1.6)(0.48\,ksi)(229.5\,in^3)(1\,ft/12\,in)$

$M_{cr} = 9.8\,ft\cdot k$

Max Positive Moment:

$M_{LL} = 7.8\,ft\cdot k$

$M_{DL} = 5.5\,ft\cdot k$

$M_u = (1.75)(7.8\,ft\cdot k) + (1.25)(5.5\,ft\cdot k)$

$M_u = 20.5\,ft\cdot k$

Design for Moment of 1.0 M_u per AASHTO LRFD 5.7.3.3.2

$R_n = \frac{M_n}{bd^2}$ then $R_u = \frac{M_n}{\phi bd^2}$

$R_u = \frac{(20.5\,ft\cdot k)(12\,in/ft)}{(0.9)(28.1\,in)(5.0\,in)^2} = 0.389$

FST

PROJECT Rutland, VT

SUBJECT Steel Truss Bridge pedestrian Slab

PROJECT NUMBER VQ-093

SHEET NUMBER

DATE 1/30/15

COMPUTED BY MAB

CHECKED BY TD

$$\rho = \frac{(0.85)\,f'_c}{f_y}\left(1-\sqrt{1-\frac{(2)(R)}{(0.85)(f'_c)}}\right)$$

$$\rho = \frac{(0.85)(4\,ksi)}{60\,ksi}\left(1-\sqrt{1-\frac{(2)(0.389)}{(0.85)(4\,ksi)}}\right)$$

$$\rho = 0.0069$$

$$A_{s\,req'd} = (0.0069)(5\,in)(28.1\,in)$$

$$A_{s\,req'd} = 0.97\,in^2$$

$$28.1\,in = 2.34\,ft$$

$$0.97\,in^2 \div 2.34\,ft = 0.414\,in^2 \text{ per foot.}$$

Check Max Rebar Spacing.

for Cracking: AASHTO LRFD 6th 5.7.3.4-1

$$s \le \frac{700\,\gamma_e}{\beta_s\,f_{ss}} - 2d_c$$

$$\beta_s = 1 + \frac{d_c}{0.7(h-d_c)}$$

take $\gamma_e = 0.75$ (smaller crack width)

for bottom (Positive Moment) Reinforcing:

$d_c = 1.5_{in} + 5/16_{in}$ (assuming #5's)

$d_c = 1.8_{in}$

$h = 7_{in}$

Assume #5's @ 6"

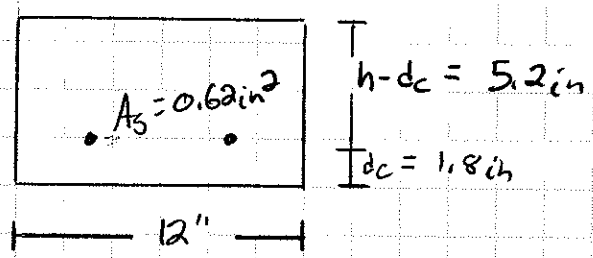

Find neutral axis.

c = depth from compression face to neutral axis

$f'_c = 4ksi$ $\beta_1 = 0.85$

$a = \beta_1 c$

ima = internal moment arm = $h - d_c - a/2$

$T_{@failure}$ = Compression @ failure = $(60ksi)(0.62in^2)$

$T = 37.2k$

$$a/2 = \frac{37.2k \div (0.85 \cdot 4ksi \cdot 12in)}{2} = 0.46in$$

$ima = 5.2in - 0.46in = 4.7in$

f_{ss} = steel tensile stress @ the service limit state.

Service Moment = 7.8ft·k + 5.5ft·k = 13.3ft·k

T_s = Tension in steel @ service

$$T_s = \left(\frac{13.3\ ft\cdot k}{2.34\ ft}\right)(12in/ft) \div 4.7in$$

$$T_s = 14.5k$$

$$f_{ss} = 14.5k \div 0.62in^2 = 23.4\ ksi$$

$$S \le \frac{(700)(0.75)}{\left(1 - \frac{1.8in}{(0.7)(5.2in)}\right)(23.4ksi)} - (2)(1.8in)$$

$$S \le 11.4in$$

#5's @ 6" is acceptable.

$\phi M_n = (0.9)(4.7in)(37.2k) = 13.1$ ft·k per foot

for the 28.1 in strip $\phi M_n = \left(\frac{28.1}{12}\right)(13.1) = 30.7$ ft·k

Negative Moment.

Minimum LL Moment = -5.2 ft·k

Minimum DL Moment = -7.5 ft·k (coincident)

2.5in Clear Cover in the top.

$d = 7in - 2.5in - 5/16in = 4.2in$

$M_u = (1.75)(5.2ft\cdot k) + (1.25)(7.5ft\cdot k)$

$M_u = 18.5$ ft·k

Per foot = 7.9 ft·k per foot

$$R_u = \frac{(7.9\,ft\cdot k)(12in/ft)}{(0.9)(12in)(4.2in)^2} = 0.5$$

$$\rho = \frac{(0.85)(4ksi)}{(60ksi)}\left(1 - \sqrt{1 - \frac{(2)(0.5)}{(0.85)(4)}}\right) = 0.009$$

$A_{s\,req'd} = (0.009)(12in)(4.2in) = 0.46in^2$ (Per foot)

#4's @ 6" is not enough.

Try #5's @ 8"

$A_{s\,prov} = (12/8)\,0.31in^2 = 0.465in^2$ Per foot.

Check max Spacing.

$$s \le \frac{700\,\gamma_e}{\beta_s f_{ss}} - 2d_c$$

$d_c = 2.5in + 5/16in = 2.8in$

$h - d_c = 4.2in$

$\beta_g = 1 + \frac{2.8}{(0.7)(4.2)} = 1.95$

$\gamma_e = 0.75$

f_{ss}:

Service Moment = 5.2ft·k + 7.5ft·k = 12.7 ft·k

On a 1ft strip service Moment = 12.7 ÷ (28.1/12)

= 5.4 ft·k

A_s prov = (12/8)(0.31in²) = 0.465in²

$a/2 = \frac{(0.465in^2)(60ksi)}{(2)(0.85)(4ksi)(12in)} = 0.34in$

$jna = 4.2in - 0.34in = 3.86in$

T_s = Service Tension = (5.4 ft·k)(12in/ft) ÷ 3.86in

$T_s = 16.8k$

$f_{ss} = 16.8k \div 0.465in^2 = 36.1 ksi$

$s \le \frac{(700)(0.75)}{(1.95)(36.1)} - (2)(2.8) = 1.9in$

5's @ 8" won't work

FST

PROJECT Rutland, VT

SUBJECT Steel T truss bridge
Pedestrian Sidewalk

PROJECT NUMBER VQ-093
SHEET NUMBER
DATE 1/30/15
COMPUTED BY MAB
CHECKED BY TD

Try # 5's @ 6 in

A_s prov per foot = $0.62 in^2$

$T = (0.62 in^2)(60 ksi) = 37.2 k$ = Tension @ failure

$$a/2 = \frac{37.2k}{(2)(0.85)(12in)(4ksi)} = 0.46 in$$

$jma = 4.2in - 0.46in = 3.7in$

$f_{ss} = (54 k\cdot ft)(12 in/ft) \div (3.7 in \cdot 0.62 in^2)$

$f_{ss} = 28.2 ksi$

$$S_{max} = \frac{(700)(0.75)}{(1.95)(28.2)} - (2)(2.8) = 3.9 in$$

N.G.

Try # 4's @ 3"

$T = (4)(0.2 in^2)(60 ksi) = 48k$

$a/2 = 0.59 in$

$jma = 3.6 in$ $f_{ss} = 22.5 ksi$

$$S_{max} = \frac{(700)(0.75)}{(1.95)(22.5)} - (2)(2.8) = 6.4 in$$

Use 4's @ 3"

Can use less at locations of low negative moment. (4's @ 6" perhaps)

FST

PROJECT Rutland, VT

SUBJECT Steel Truss Bridge

PROJECT NUMBER VQ-093

SHEET NUMBER

DATE 1/30/15

COMPUTED BY MAB

CHECKED BY TD

AASHTO LRFD 6th 9.7.3.2

Secondary Reinforcement as a percentage of Primary

$$100/\sqrt{11.375} \leq 50\%$$

29.6 %

Positive Reinforcing = 0.62 in² per foot

0.62 in² per foot • 0.296 = 0.18 in² per foot

use #4's @ 12 in in the secondary direction.

FST

PROJECT Rutland Truss

PROJECT NUMBER VQ-09.3

SHEET NUMBER

DATE

COMPUTED BY MAB

CHECKED BY TD

SUBJECT Pedestrian Slab

Sketch

Use...

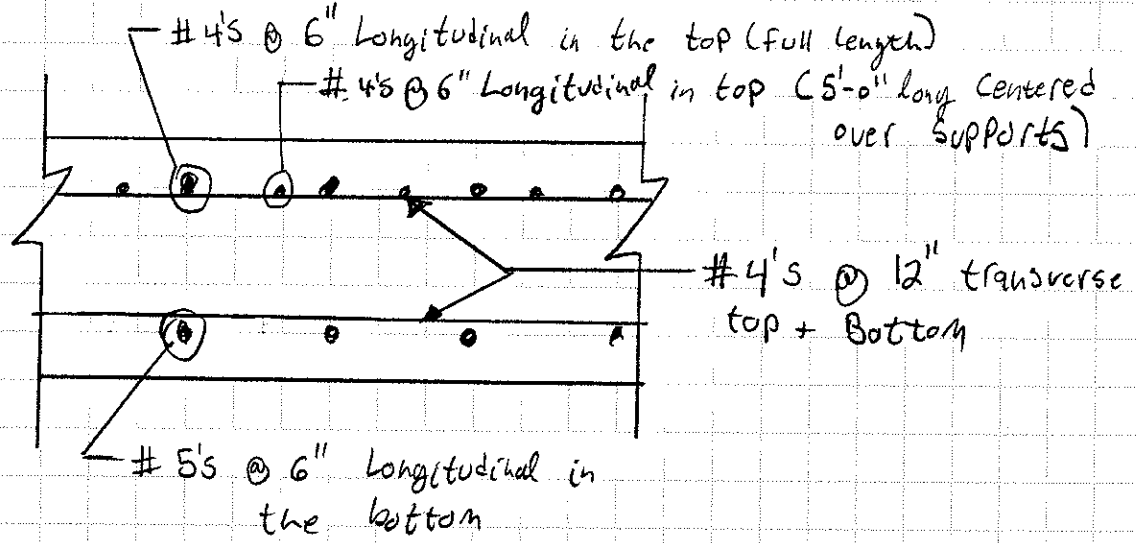

J. GEOMETRY AND CAMBER

SUPERSTRUCTURE DESIGN CALCULATIONS FOR BRIDGE #17, RUTLAND, VT

Project: Truss Rutland VT

FILE: VTRANS TRUSS VERTICAL CURVE.XLS

input blue values, remaining values are computed

PVI STA	08+65.800	PVC STA	07+60.800
PVI ELEV	531.010	PVC ELEV	527.76
LENGTH	210.000		
GRADE IN	3.1000%	PVT STA	09+70.800
GRADE OUT	-4.3982%	PVT ELEV	526.39
		STA. hi-lo	08+47.621
		EL. hi-lo	529.10

A	-0.000178529	IN CURVE:	
B	3.1000%	EL=AX^2+BX+C	
C	527.755	X=STA-VPC	
X hi-lo	86.821		

SEGMENT RANGE:

MIN. STA	**MAX STA.**
7+60.800	**10+10.000**

Superelevation Left:		Superelevation Right:	
Station	Superelevation	Station	Superelevation
06+00.000	-0.0200	06+00.000	0.0200
07+00.000	-0.0200	07+00.000	0.0200
08+00.000	-0.0200	08+00.000	0.0200
09+00.000	-0.0200	09+00.000	0.0200
10+00.000	-0.0200	10+00.000	0.0200

INCREMENTAL STATIONS:

BEGIN STA 07+63.500 INCREMENT 11.38 **SPAN 1, NORTH TRUSS**

STA	PG ELEV (TAN)	PG ELEV (CURVE)	Instant Slope	Superel. Lt.	Superel. Rt.	Drop	Panel Pt Elev.	Station Range		Cord Elevation	VC Ordinate	VC Ordinate (in)
07+63.500	--	527.84	0.03	-0.0200	--	-3.310	524.53	OK		524.53	0.000	0.000
07+74.875	--	528.16	0.03	-0.0200	--	-3.310	524.85	OK	0.157	524.68	0.162	1.940
07+86.250	--	528.43	0.02	-0.0200	--	-3.310	525.12	OK	1.882	524.84	0.277	3.326
07+97.625	--	528.65	0.02	-0.0200	--	-3.310	525.34	OK		525.00	0.346	4.158
08+09.000	--	528.83	0.01	-0.0200	--	-3.310	525.52	OK		525.15	0.370	4.435
08+20.375	--	528.97	0.01	-0.0200	--	-3.310	525.66	OK		525.31	0.346	4.158
08+31.750	--	529.06	0.01	-0.0200	--	-3.310	525.75	OK		525.47	0.277	3.326
08+43.125	--	529.10	0.00	-0.0200	--	-3.310	525.79	OK		525.63	0.162	1.940
08+54.500	--	529.09	0.00	-0.0200	--	-3.310	525.78	OK		525.78	0.000	0.000

BEGIN STA 08+56.500 INCREMENT 11.10 **SPAN 2, NORTH TRUSS**

STA	PG ELEV (TAN)	PG ELEV (CURVE)	Instant Slope	Superel. Lt.	Superel. Rt.	Drop	Panel Pt Elev.	Station Range		Cord Elevation	VC Ordinate	VC Ordinate (in)
08+56.500	--	529.09	0.00	-0.0200	--	-3.310	525.78	OK		525.78	0.000	0.000
08+67.600	--	529.03	-0.01	-0.0200	--	-3.310	525.72	OK		525.52	0.198	2.376
08+78.700	--	528.93	-0.01	-0.0200	--	-3.310	525.62	OK	-0.255	525.27	0.352	4.223
08+89.800	--	528.78	-0.02	-0.0200	--	-3.310	525.47	OK	-3.062	525.01	0.462	5.543
09+00.900	--	528.59	-0.02	-0.0200	--	-3.310	525.28	OK		524.76	0.528	6.335
09+12.000	--	528.36	-0.02	-0.0200	--	-3.310	525.05	OK		524.50	0.550	6.599
09+23.100	--	528.08	-0.03	-0.0200	--	-3.310	524.77	OK		524.25	0.528	6.335
09+34.200	--	527.76	-0.03	-0.0200	--	-3.310	524.45	OK	-2.552	523.99	0.462	5.543
09+45.300	--	527.40	-0.03	-0.0200	--	-3.310	524.09	OK		523.74	0.352	4.223
09+56.400	--	526.99	-0.04	-0.0200	--	-3.310	523.68	OK		523.48	0.198	2.376
09+67.500	--	526.54	-0.043	-0.0200	--	-3.310	523.23	OK	-2.552	523.23	0.000	0.000

			BEGIN STA	07+63.500	INCREMENT	11.38		SPAN 1, SOUTH TRUSS							
LC to Inv	PG to Inv	Sewer Inv	STA	PG ELEV (TAN)	PG ELEV (CURVE)	Instant Slope	Superel. Lt.	Superel. Rt.	Offset	Offset Elev.	Station Range		Cord Elevation	VC Ordinate	VC Ordinate (in)
2.37	5.04	522.80	07+63.500	--	527.84	0.03	-0.0200	--	-2.670	525.17	OK		525.17	0.000	0.000
2.72	5.39	522.77	07+74.875	--	528.16	0.03	-0.0200	--	-2.670	525.49	OK		525.32	0.162	1.940
3.03	5.70	522.73	07+86.250	--	528.43	0.02	-0.0200	--	-2.670	525.76	OK		525.48	0.277	3.326
3.28	5.95	522.70	07+97.625	--	528.65	0.02	-0.0200	--	-2.670	525.98	OK		525.64	0.346	4.158
3.50	6.17	522.66	08+09.000	--	528.83	0.01	-0.0200	--	-2.670	526.16	OK		525.79	0.370	4.435
3.67	6.34	522.63	08+20.375	--	528.97	0.01	-0.0200	--	-2.670	526.30	OK		525.95	0.346	4.158
3.79	6.46	522.60	08+31.750	--	529.06	0.01	-0.0200	--	-2.670	526.39	OK		526.11	0.277	3.326
4.17	6.84	522.26	08+43.125	--	529.10	0.00	-0.0200	--	-2.670	526.43	OK		526.27	0.162	1.940
3.89	6.56	522.53	08+54.500	--	529.09	0.00	-0.0200	--	-2.670	526.42	OK		526.42	0.000	0.000
3.38	5.44														
			BEGIN STA	08+56.500	INCREMENT	11.10		SPAN 2, SOUTH TRUSS							
LC to Inv	PG to Inv	Sewer Inv	STA	PG ELEV (TAN)	PG ELEV (CURVE)	Instant Slope	Superel. Lt.	Superel. Rt.	Offset	Offset Elev.	Station Range		Cord Elevation	VC Ordinate	VC Ordinate (in)
3.90	6.57	522.52	08+56.500	--	529.09	0.00	-0.0200	--	-2.670	526.42	OK		526.42	0.000	0.000
3.87	6.54	522.49	08+67.600	--	529.03	-0.01	-0.0200	--	-2.670	526.36	OK		526.16	0.198	2.376
3.81	6.48	522.45	08+78.700	--	528.93	-0.01	-0.0200	--	-2.670	526.26	OK		525.91	0.352	4.223
3.69	6.36	522.42	08+89.800	--	528.78	-0.02	-0.0200	--	-2.670	526.11	OK	-0.255	525.65	0.462	5.543
3.53	6.20	522.39	09+00.900	--	528.59	-0.02	-0.0200	--	-2.670	525.92	OK	-3.062	525.40	0.528	6.335
3.34	6.01	522.35	09+12.000	--	528.36	-0.02	-0.0200	--	-2.670	525.69	OK		525.14	0.550	6.599
3.09	5.76	522.32	09+23.100	--	528.08	-0.03	-0.0200	--	-2.670	525.41	OK		524.89	0.528	6.335
2.80	5.47	522.29	09+34.200	--	527.76	-0.03	-0.0200	--	-2.670	525.09	OK		524.63	0.462	5.543
2.48	5.15	522.25	09+45.300	--	527.40	-0.03	-0.0200	--	-2.670	524.73	OK		524.38	0.352	4.223
2.10	4.77	522.22	09+56.400	--	526.99	-0.04	-0.0200	--	-2.670	524.32	OK		524.12	0.198	2.376
1.68	4.35	522.19	09+67.500	--	526.54	-0.04	-0.0200	--	-2.670	523.87	OK		523.87	0.000	0.000
3.43	6.37														
			RANDOM STATIONS:	PG ELEV (TAN)	PG ELEV (CURVE)	Slope	Superel. Lt.	Superel. Rt.	Offset	Offset Elev.	Station Range				
		A1	07+63.500	--	527.84	0.030	-0.0200	--	-19.000	527.46	OK				
		P	08+54.500	--	529.09	-0.002	--	0.0200	0.000	529.09	OK				
		P	08+56.500	--	529.09	-0.003	--	0.0200	23.500	529.56	OK				
		A2	09+67.500	--	526.54	-0.043	-0.0200	--	-19.000	526.16	OK				
			08+55.500	--	529.09	-0.003	--	0.0200	0.000	529.09	OK				
			111+74.750	77.600	--	--	--	0.0200	23.500	78.07	VERIFY				
			113+17.167	71.336	--	--	-0.0200	--	-17.000	71.00	VERIFY				
			112+94.750	72.322	--	--	-0.0200	--	-17.000	71.98	VERIFY				
			112+94.750	72.322	--	--	--	0.0200	0.000	72.32	VERIFY				
			112+94.750	72.322	--	--	--	0.0200	17.000	72.66	VERIFY				
			113+17.167	71.336	--	--	--	0.0200	17.000	71.68	VERIFY				
			112+94.750	72.322	--	--	--	0.0200	17.000	72.66	VERIFY				
			109+96.750	85.429	--	--	-0.0200	--	-19.000	85.05	VERIFY				
			110+85.750	81.514	--	--	-0.0200	--	-19.000	81.13	VERIFY				
			111+74.750	77.600	--	--	-0.0200	--	-19.000	77.22	VERIFY				

BEARING PEDESTAL DATA (ORIGINAL)

LOCATION	SIDE	STA	PG EL	DROP TO BOT CHD	EL CL BOT CHD	PEDESTAL EL PER PLAN	BRG ASSEMBLY	CL BOT CHD TO TOP SOLE PL	SEAT EL PER PLAN	PED HT
A1	LT	7+63.500	527.84	-3.31	524.53	523.51	0.458	0.56	523.00	0.51
A1	RT	7+63.500	527.84	-2.67	525.17	524.17	0.458	0.54	523.00	1.17
P	LT	8+55.500	529.09	-3.31	525.78	524.76	0.458	0.56	524.25	0.51
P	RT	8+55.500	529.09	-2.67	526.42	525.42	0.458	0.54	524.25	1.17
A2	LT	9+67.500	526.54	-3.31	523.23	522.21	0.458	0.56	521.75	0.46
A2	RT	9+67.500	526.54	-2.67	523.87	522.87	0.458	0.54	521.75	1.12

USE BEARING PEDESTAL DATA (REVISED)

LOCATION	SIDE	STA	PG EL	DROP TO BOT CHD	EL CL BOT CHD	PEDESTAL EL REV	BRG ASSEMBLY	CL BOT CHD TO TOP SOLE PL	SEAT EL REV	PED HT	CHANGE
A1	LT	7+63.500	--	-3.31	524.53	522.95	0.452	1.13	522.45	0.50	-0.55
A1	RT	7+63.500	--	-2.67	525.17	523.59	0.452	1.13	522.45	1.14	-0.55
P	LT	8+55.500	--	-3.31	525.78	524.20	0.452	1.13	523.70	0.50	-0.55
P	RT	8+55.500	--	-2.67	526.42	524.84	0.452	1.13	523.70	1.14	-0.55
A2	LT	9+67.500	--	-3.31	523.23	521.65	0.452	1.13	521.15	0.50	-0.60
A2	RT	9+67.500	--	-2.67	523.87	522.29	0.452	1.13	521.15	1.14	-0.60

FST

PROJECT

SUBJECT

PROJECT NUMBER

SHEET NUMBER

DATE

COMPUTED BY TD

CHECKED BY MAB

VERTICAL CLEARANCE LOW CHORD:

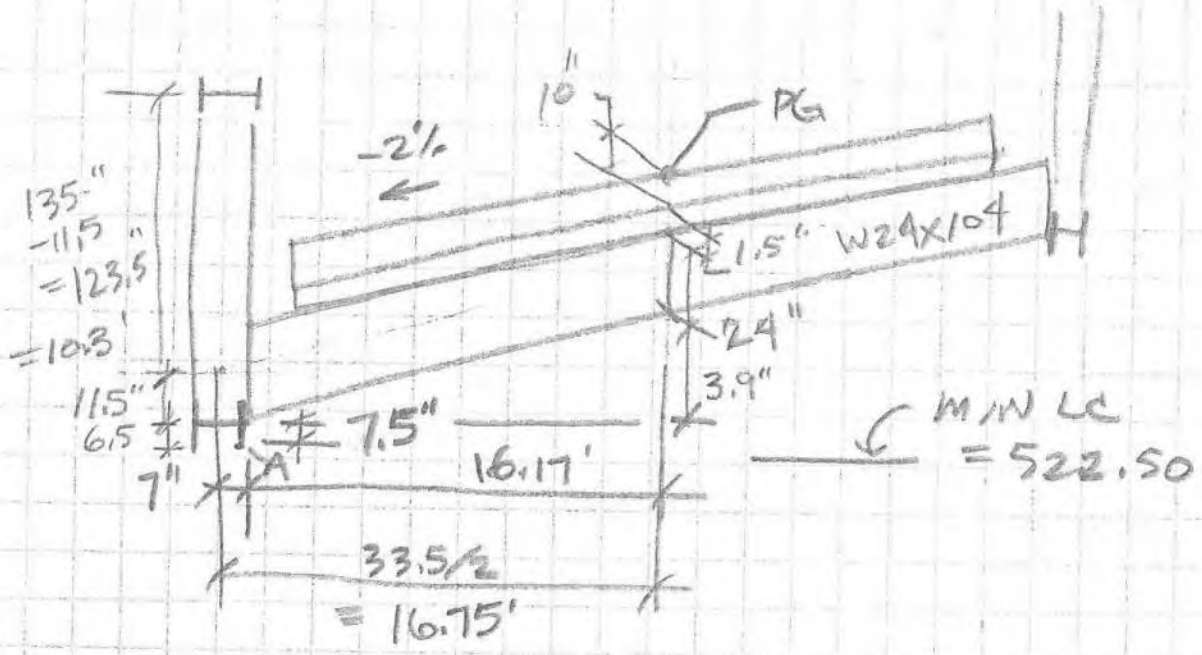

$$\text{PTA DROP} = PG - (10+1.5+24)\tfrac{1}{12} - 2\%(16.17) - \frac{7.5}{12}$$

$$= PG - 2.96 - 0.32 - 0.63$$

$$= PG - 3.91$$

PG ABUT 1 = 527.84 − 3.91 =

PG ABUT 2 = 526.54 − 3.91 = 522.63 > 522.50 (MIN.)

OK

VT truss span 1, for Camber
Units: feet, kips

LinPro 2.7.5
File: C:\Users\densfo_t\Documents\LinPro files\vt truss span 1 REV 3.aln
Units: kN-m

Input Data

Coordinates of joints/supports

Joint	X	Y	Rx	Ry	Rt	SPRING.X	SPRING.Y	SPRING.ROT	CS.ROT
0	0.000	0.000	1	1	0	0.00E+000	0.00E+000	0.00E+000	0.00
1	11.375	0.000	0	0	0	0.00E+000	0.00E+000	0.00E+000	0.00
2	22.750	0.000	0	0	0	0.00E+000	0.00E+000	0.00E+000	0.00
3	34.125	0.000	0	0	0	0.00E+000	0.00E+000	0.00E+000	0.00
4	45.500	0.000	0	0	0	0.00E+000	0.00E+000	0.00E+000	0.00
5	56.875	0.000	0	0	0	0.00E+000	0.00E+000	0.00E+000	0.00
6	68.250	0.000	0	0	0	0.00E+000	0.00E+000	0.00E+000	0.00
7	79.625	0.000	0	0	0	0.00E+000	0.00E+000	0.00E+000	0.00
8	91.000	0.000	0	1	0	0.00E+000	0.00E+000	0.00E+000	0.00
9	11.375	11.250	0	0	0	0.00E+000	0.00E+000	0.00E+000	0.00
10	34.125	11.250	0	0	0	0.00E+000	0.00E+000	0.00E+000	0.00
11	56.875	11.250	0	0	0	0.00E+000	0.00E+000	0.00E+000	0.00
12	79.625	11.250	0	0	0	0.00E+000	0.00E+000	0.00E+000	0.00

Members

Member	Joint I	Joint J	Type	Releases
0:	0	1	BOT CHORD1	111111
1:	1	2	BOT CHORD1	111111
2:	2	3	BOT CHORD1	111111
3:	3	4	BOT CHORD1	111111
4:	4	5	BOT CHORD1	111111
5:	5	6	BOT CHORD1	111111
6:	6	7	BOT CHORD1	111111
7:	7	8	BOT CHORD1	111111
8:	0	9	END DIAGONAL	111111
9:	9	2	DIAGONAL	111111
10:	2	10	DIAGONAL	111111
11:	10	4	DIAGONAL	111111
12:	4	11	DIAGONAL	111111
13:	11	6	DIAGONAL	111111
14:	6	12	DIAGONAL	111111
15:	12	8	END DIAGONAL	111111
16:	1	9	VERTICAL	111111
17:	3	10	VERTICAL	111111
18:	5	11	VERTICAL	111111
19:	7	12	VERTICAL	111111
20:	9	10	TOP CHORD1	111111
21:	10	11	TOP CHORD1	111111
22:	11	12	TOP CHORD1	111111

Cross Sections

0: BOT CHORD1
A= 1.840E-01
I= 1.000E-04
E= 4176000.00
alpha= 1.2E-05

1: TOP CHORD1
A= 3.470E-01
I= 1.000E-04
E= 4176000.00
alpha= 1.2E-05

2: DIAGONAL
A= 1.240E-01
I= 1.000E-04
E= 4176000.00
alpha= 1.2E-05

3: VERTICAL
A= 1.490E-01
I= 1.000E-04
E= 4176000.00
alpha= 1.2E-05

4: END DIAGONAL
A= 3.472E+03
I= 1.000E-04
E= 4176000.00
alpha= 1.2E-05

VT truss span 1, for Camber
Units: feet, kips

```
Load
   0: Distributed Load
           Load Case: DC1  STEEL WT
           Load Name: Distributed
           Coordinate System: Global Y
           a= 0.00
           b= 1.00  On Member
           p1= -1.00
           p2= -1.00

   1: Distributed Load
           Load Case: DC2  DECK
           Load Name: Distributed
           Coordinate System: Global Y
           a= 0.00
           b= 1.00  On Member
           p1= -1.95
           p2= -1.95

   2: Distributed Load
           Load Case: DC3  SDL LT
           Load Name: Distributed
           Coordinate System: Global Y
           a= 0.00
           b= 1.00  On Member
           p1= -1.10
           p2= -1.10

   3: Distributed Load
           Load Case: DW  FWS UTIL
           Load Name: Distributed
           Coordinate System: Global Y
           a= 0.00
           b= 1.00  On Member
           p1= -0.60
           p2= -0.60

   4: Distributed Load
           Load Case: DC3  SDL RT
           Load Name: Distributed
           Coordinate System: Global Y
           a= 0.00
           b= 1.00  On Member
           p1= -0.20
           p2= -0.20

   5: Distributed Load
           Load Case: DC1  STEEL WT
           Load Name: Distributed
           Coordinate System: Global Y
           a= 0.00
           b= 1.00  On Member
           p1= -0.85
           p2= -0.85

   6: Distributed Load
           Load Case: DC3  SDL LT
           Load Name: Distributed
           Coordinate System: Global Y
           a= 0.00
           b= 1.00  On Member
           p1= -1.00
           p2= -1.00

   7: Distributed Load
           Load Case: L+I  MOMENT TRUCK ENV
           Load Name: Distributed
           Coordinate System: Global Y
           a= 0.00
           b= 1.00  On Member
           p1= -2.38
           p2= -2.38

   8: Distributed Load
           Load Case: L+I  SHEAR TRUCK ENV
           Load Name: Distributed
           Coordinate System: Global Y
           a= 0.00
           b= 1.00  On Member
```

```
        p1= -1.24
        p2= -1.24

9: Distributed Load
        Load Case: L+I  M&V LANE
        Load Name: Distributed
        Coordinate System: Global Y
        a= 0.00
        b= 1.00  On Member
        p1= -0.76
        p2= -0.76

10: Distributed Load
        Load Case: FATIGUE MOMENT ENV
        Load Name: Distributed
        Coordinate System: Global Y
        a= 0.00
        b= 1.00  On Member
        p1= -1.95
        p2= -1.95

11: Distributed Load
        Load Case: FATIGUE SHEAR ENV
        Load Name: Distributed
        Coordinate System: Global Y
        a= 0.00
        b= 1.00  On Member
        p1= -1.07
        p2= -1.07

12: Distributed Load
        Load Case: DC1  STEEL WT
        Load Name: Distributed
        Coordinate System: Global Y
        a= 0.00
        b= 1.00  On Member
        p1= -3.80
        p2= -3.80

13: Distributed Load
        Load Case: DC DEAD LT
        Load Name: Distributed
        Coordinate System: Global Y
        a= 0.00
        b= 1.00  On Member
        p1= -3.80
        p2= -3.80

14: Point Load
        Load Case: L+I  MOMENT TRUCK ENV
        Load Name: Point
        Coordinate System: Global
        a= 0.00  Absolute from Joint I
        Force X= 0.00
        Force Y= 14.90
        Moment M= 0.00

15: Point Load
        Load Case: L+I  SHEAR TRUCK ENV
        Load Name: Point
        Coordinate System: Global
        a= 0.00  Absolute from Joint I
        Force X= 0.00
        Force Y= -89.80
        Moment M= 0.00

16: Point Load
        Load Case: FATIGUE MOMENT ENV
        Load Name: Point
        Coordinate System: Global
        a= 0.00  Absolute from Joint I
        Force X= 0.00
        Force Y= 22.60
        Moment M= 0.00

17: Point Load
        Load Case: FATIGUE SHEAR ENV
        Load Name: Point
        Coordinate System: Global
        a= 0.00  Absolute from Joint I
        Force X= 0.00
        Force Y= -58.60
```

```
        Moment M= 0.00

18: Distributed Load
        Load Case: FATIGUE MOMENT ENV
        Load Name: Distributed
        Coordinate System: Global Y
        a= 0.00
        b= 1.00  On Member
        p1= -1.27
        p2= -1.27

19: Distributed Load
        Load Case: FATIGUE SHEAR ENV
        Load Name: Distributed
        Coordinate System: Global Y
        a= 0.00
        b= 1.00  On Member
        p1= -0.70
        p2= -0.70

20: Point Load
        Load Case: FATIGUE MOMENT ENV
        Load Name: Point
        Coordinate System: Global
        a= 0.00  Absolute from Joint I
        Force X= 0.00
        Force Y= 14.70
        Moment M= 0.00

21: Point Load
        Load Case: FATIGUE SHEAR ENV
        Load Name: Point
        Coordinate System: Global
        a= 0.00  Absolute from Joint I
        Force X= 0.00
        Force Y= -38.20
        Moment M= 0.00

22: Distributed Load
        Load Case: UNIT DISTR DOWN -1.0 K/FT
        Load Name: Distributed
        Coordinate System: Global Y
        a= 0.00
        b= 1.00  On Member
        p1= 1.00
        p2= 1.00

23: Point Load
        Load Case: UNIT POINT MIDSPAN UP +1.0 K
        Load Name: Point
        Coordinate System: Global
        a= 0.00  Absolute from Joint I
        Force X= 0.00
        Force Y= 1.00
        Moment M= 0.00

24: Distributed Load
        Load Case: UNIT DISTR DOWN -1.0 K/FT
        Load Name: Distributed
        Coordinate System: Global Y
        a= 0.00
        b= 1.00  On Member
        p1= -1.00
        p2= -1.00

25: Point Load
        Load Case: UNIT POINT MIDSPAN DOWN -1.0 K
        Load Name: Point
        Coordinate System: Global
        a= 0.00  Absolute from Joint I
        Force X= 0.00
        Force Y= -1.00
        Moment M= 0.00

26: Distributed Load
        Load Case: UNIT DISTR DOWN -1.0 K/FT
        Load Name: Distributed
        Coordinate System: Global Y
        a= 0.00
        b= 1.00  On Member
        p1= -1.00
        p2= -1.00
```

VT truss span 1, for Camber
Units: feet, kips

```
Load Applied on Joints
   Joint   Applied Loads
   4:      14, 15, 20, 21, 23, 25


Load Applied on Members
   Member  Applied Loads
   0:      1, 3, 4, 5, 6, 7, 8, 9, 13, 18, 19, 26
   1:      1, 3, 4, 5, 6, 7, 8, 9, 13, 18, 19, 24
   2:      1, 3, 4, 5, 6, 7, 8, 9, 13, 18, 19, 24
   3:      1, 3, 4, 5, 6, 7, 8, 9, 13, 18, 19, 24
   4:      1, 3, 4, 5, 6, 7, 8, 9, 13, 18, 19, 24
   5:      1, 3, 4, 5, 6, 7, 8, 9, 13, 18, 19, 24
   6:      1, 3, 4, 5, 6, 7, 8, 9, 13, 18, 19, 24
   7:      1, 3, 4, 5, 6, 7, 8, 9, 13, 18, 19, 24


Load Cases
   0: DC1  STEEL WT
   1: DC2  DECK
   2: DC3  SDL LT
   3: DW  FWS UTIL
   4: L+I  MOMENT TRUCK ENV
   5: L+I  SHEAR TRUCK ENV
   6: L+I  M&V LANE
   7: DC3  SDL RT
   8: FATIGUE MOMENT ENV
   9: FATIGUE SHEAR ENV
   10: DC DEAD LT
   11: UNIT DISTR DOWN -1.0 K/FT
   12: UNIT POINT MIDSPAN UP +1.0 K
   13: UNIT POINT MIDSPAN DOWN -1.0 K


Load Combinations
   0: SCV I DEAD DEFL LT = 1.00xDC1  STEEL WT + 1.00xDC2  DECK + 1.00xDC3  SDL LT + 1.00xDW  FWS UTIL + 0.00xL+I  MOME
M&V LANE + 0.00xDC3  SDL RT + 0.00xFATIGUE MOMENT ENV + 0.00xFATIGUE SHEAR ENV + 0.00xDC DEAD LT + 0.00xUNIT DISTR DOU
0.00xUNIT POINT MIDSPAN DOWN -1.0 K
   1: SVC I DEAD DEFL RT = 1.00xDC1  STEEL WT + 1.00xDC2  DECK + 0.00xDC3  SDL LT + 1.00xDW  FWS UTIL + 0.00xL+I  MOME
M&V LANE + 1.00xDC3  SDL RT + 0.00xFATIGUE MOMENT ENV + 0.00xFATIGUE SHEAR ENV + 0.00xDC DEAD LT + 0.00xUNIT DISTR DOU
0.00xUNIT POINT MIDSPAN DOWN -1.0 K
   2: STRI MOMENT = 0.00xDC1  STEEL WT + 0.00xDC2  DECK + 0.00xDC3  SDL LT + 1.50xDW  FWS UTIL + 1.75xL+I  MOMENT TRUC
LANE + 0.00xDC3  SDL RT + 0.00xFATIGUE MOMENT ENV + 0.00xFATIGUE SHEAR ENV + 1.25xDC DEAD LT + 0.00xUNIT DISTR DOWN -1
0.00xUNIT POINT MIDSPAN DOWN -1.0 K
   3: STRI SHEAR = 0.00xDC1  STEEL WT + 0.00xDC2  DECK + 0.00xDC3  SDL LT + 1.50xDW  FWS UTIL + 0.00xL+I  MOMENT TRUCK
LANE + 0.00xDC3  SDL RT + 0.00xFATIGUE MOMENT ENV + 0.00xFATIGUE SHEAR ENV + 1.25xDC DEAD LT + 0.00xUNIT DISTR DOWN -1
0.00xUNIT POINT MIDSPAN DOWN -1.0 K
   4: SVCII MOMENT = 0.00xDC1  STEEL WT + 0.00xDC2  DECK + 0.00xDC3  SDL LT + 1.00xDW  FWS UTIL + 1.30xL+I  MOMENT TRU
LANE + 0.00xDC3  SDL RT + 0.00xFATIGUE MOMENT ENV + 0.00xFATIGUE SHEAR ENV + 1.00xDC DEAD LT + 0.00xUNIT DISTR DOWN -1
0.00xUNIT POINT MIDSPAN DOWN -1.0 K
   5: SVCII SHEAR = 0.00xDC1  STEEL WT + 0.00xDC2  DECK + 0.00xDC3  SDL LT + 1.00xDW  FWS UTIL + 0.00xL+I  MOMENT TRUC
LANE + 0.00xDC3  SDL RT + 0.00xFATIGUE MOMENT ENV + 0.00xFATIGUE SHEAR ENV + 1.00xDC DEAD LT + 0.00xUNIT DISTR DOWN -1
0.00xUNIT POINT MIDSPAN DOWN -1.0 K
   6: FATGI MOMENT = 0.00xDC1  STEEL WT + 0.00xDC2  DECK + 0.00xDC3  SDL LT + 0.00xDW  FWS UTIL + 0.00xL+I  MOMENT TRU
LANE + 0.00xDC3  SDL RT + 1.50xFATIGUE MOMENT ENV + 0.00xFATIGUE SHEAR ENV + 0.00xDC DEAD LT + 0.00xUNIT DISTR DOWN -1
0.00xUNIT POINT MIDSPAN DOWN -1.0 K
   7: FATGI SHEAR = 0.00xDC1  STEEL WT + 0.00xDC2  DECK + 0.00xDC3  SDL LT + 0.00xDW  FWS UTIL + 0.00xL+I  MOMENT TRUC
LANE + 0.00xDC3  SDL RT + 0.00xFATIGUE MOMENT ENV + 1.50xFATIGUE SHEAR ENV + 0.00xDC DEAD LT + 0.00xUNIT DISTR DOWN -1
0.00xUNIT POINT MIDSPAN DOWN -1.0 K
   8: L+I MOMENT 3S2 ENV = 0.00xDC1  STEEL WT + 0.00xDC2  DECK + 0.00xDC3  SDL LT + 0.00xDW  FWS UTIL + 0.00xL+I  MOME
M&V LANE + 0.00xDC3  SDL RT + 0.00xFATIGUE MOMENT ENV + 0.00xFATIGUE SHEAR ENV + 0.00xDC DEAD LT + 1.73xUNIT DISTR DOU
0.00xUNIT POINT MIDSPAN DOWN -1.0 K
   9: L+I SHEAR 3S2 ENV = 0.00xDC1  STEEL WT + 0.00xDC2  DECK + 0.00xDC3  SDL LT + 0.00xDW  FWS UTIL + 0.00xL+I  MOMEN
M&V LANE + 0.00xDC3  SDL RT + 0.00xFATIGUE MOMENT ENV + 0.00xFATIGUE SHEAR ENV + 0.00xDC DEAD LT + 0.97xUNIT DISTR DOU
72.70xUNIT POINT MIDSPAN DOWN -1.0 K
   10: L+I MOMENT 6AXLE ENV = 0.00xDC1  STEEL WT + 0.00xDC2  DECK + 0.00xDC3  SDL LT + 0.00xDW  FWS UTIL + 0.00xL+I  M
0.00xL+I  M&V LANE + 0.00xDC3  SDL RT + 0.00xFATIGUE MOMENT ENV + 0.00xFATIGUE SHEAR ENV + 0.00xDC DEAD LT + 3.26xUNIT
+1.0 K + 0.00xUNIT POINT MIDSPAN DOWN -1.0 K
   11: L+I SHEAR 6AXLE ENV = 0.00xDC1  STEEL WT + 0.00xDC2  DECK + 0.00xDC3  SDL LT + 0.00xDW  FWS UTIL + 0.00xL+I  MO
0.00xL+I  M&V LANE + 0.00xDC3  SDL RT + 0.00xFATIGUE MOMENT ENV + 0.00xFATIGUE SHEAR ENV + 0.00xDC DEAD LT + 1.77xUNIT
+1.0 K + 118.00xUNIT POINT MIDSPAN DOWN -1.0 K
   12: L+I MOMENT 3AXLE ENV = 0.00xDC1  STEEL WT + 0.00xDC2  DECK + 0.00xDC3  SDL LT + 0.00xDW  FWS UTIL + 0.00xL+I  M
0.00xL+I  M&V LANE + 0.00xDC3  SDL RT + 0.00xFATIGUE MOMENT ENV + 0.00xFATIGUE SHEAR ENV + 0.00xDC DEAD LT + 1.58xUNIT
+1.0 K + 0.00xUNIT POINT MIDSPAN DOWN -1.0 K
   13: L+I SHEAR 3AXLE ENV = 0.00xDC1  STEEL WT + 0.00xDC2  DECK + 0.00xDC3  SDL LT + 0.00xDW  FWS UTIL + 0.00xL+I  MO
0.00xL+I  M&V LANE + 0.00xDC3  SDL RT + 0.00xFATIGUE MOMENT ENV + 0.00xFATIGUE SHEAR ENV + 0.00xDC DEAD LT + 0.81xUNIT
+1.0 K + 80.70xUNIT POINT MIDSPAN DOWN -1.0 K
   14: L+I MOMENT 4AXLE ENV = 0.00xDC1  STEEL WT + 0.00xDC2  DECK + 0.00xDC3  SDL LT + 0.00xDW  FWS UTIL + 0.00xL+I  M
0.00xL+I  M&V LANE + 0.00xDC3  SDL RT + 0.00xFATIGUE MOMENT ENV + 0.00xFATIGUE SHEAR ENV + 0.00xDC DEAD LT + 1.79xUNIT
+1.0 K + 0.00xUNIT POINT MIDSPAN DOWN -1.0 K
   15: L+I SHEAR 4AXLE ENV = 0.00xDC1  STEEL WT + 0.00xDC2  DECK + 0.00xDC3  SDL LT + 0.00xDW  FWS UTIL + 0.00xL+I  MO
```

0.00xL+I M&V LANE + 0.00xDC3 SDL RT + 0.00xFATIGUE MOMENT ENV + 0.00xFATIGUE SHEAR ENV + 0.00xDC DEAD LT + 0.93xUNI
+1.0 K + 89.30xUNIT POINT MIDSPAN DOWN -1.0 K
16: L+I MOMENT 5AXLE ENV = 0.00xDC1 STEEL WT + 0.00xDC2 DECK + 0.00xDC3 SDL LT + 0.00xDW FWS UTIL + 0.00xL+I M
0.00xL+I M&V LANE + 0.00xDC3 SDL RT + 0.00xFATIGUE MOMENT ENV + 0.00xFATIGUE SHEAR ENV + 0.00xDC DEAD LT + 1.86xUNI
+1.0 K + 0.00xUNIT POINT MIDSPAN DOWN -1.0 K
17: L+I SHEAR 5AXLE ENV = 0.00xDC1 STEEL WT + 0.00xDC2 DECK + 0.00xDC3 SDL LT + 0.00xDW FWS UTIL + 0.00xL+I MO
0.00xL+I M&V LANE + 0.00xDC3 SDL RT + 0.00xFATIGUE MOMENT ENV + 0.00xFATIGUE SHEAR ENV + 0.00xDC DEAD LT + 1.02xUNI
+1.0 K + 83.80xUNIT POINT MIDSPAN DOWN -1.0 K
18: L+I MOMENT H20 ENV = 0.00xDC1 STEEL WT + 0.00xDC2 DECK + 0.00xDC3 SDL LT + 0.00xDW FWS UTIL + 0.00xL+I MON
+I M&V LANE + 0.00xDC3 SDL RT + 0.00xFATIGUE MOMENT ENV + 0.00xFATIGUE SHEAR ENV + 0.00xDC DEAD LT + 1.07xUNIT DISTR
0.00xUNIT POINT MIDSPAN DOWN -1.0 K
19: L+I SHEAR H20 ENV = 0.00xDC1 STEEL WT + 0.00xDC2 DECK + 0.00xDC3 SDL LT + 0.00xDW FWS UTIL + 0.00xL+I MOMI
M&V LANE + 0.00xDC3 SDL RT + 0.00xFATIGUE MOMENT ENV + 0.00xFATIGUE SHEAR ENV + 0.00xDC DEAD LT + 0.54xUNIT DISTR DOU
56.60xUNIT POINT MIDSPAN DOWN -1.0 K

Masses

Masses Applied on Joints
Joint Applied Masses

==========
Static Analysis Results

Load Case: DC1 STEEL WT

Displacements of joints in global CS

Joint	X	Y	phi
0	0.000000	0.000000	-0.039494
1	0.000523	-0.005034	0.005627
2	0.001044	-0.010138	-0.001715
3	0.002141	-0.014067	0.000066
4	0.003239	-0.014821	0.000000
5	0.004336	-0.014067	-0.000066
6	0.005434	-0.010138	0.001715
7	0.005954	-0.005034	-0.005627
8	0.006477	0.000000	0.039494
9	0.004792	-0.004846	0.003459
10	0.003859	-0.013892	-0.000377
11	0.002618	-0.013892	0.000377
12	0.001685	-0.004846	-0.003459

Reactions in global CS

Joint	Rx	Ry	M
0	0.000000	38.675000	0.000000
8	0.000000	38.675000	0.000000

Load Case: DC2 DECK

Displacements of joints in global CS

Joint	X	Y	phi
0	0.000000	0.000000	-0.090603
1	0.001201	-0.011548	0.012909
2	0.002395	-0.023258	-0.003935
3	0.004912	-0.032271	0.000152
4	0.007430	-0.034000	0.000000
5	0.009948	-0.032271	-0.000152
6	0.012466	-0.023258	0.003935
7	0.013660	-0.011548	-0.012909
8	0.014860	0.000000	0.090603
9	0.010994	-0.011117	0.007935
10	0.008853	-0.031869	-0.000866
11	0.006007	-0.031869	0.000866
12	0.003866	-0.011117	-0.007935

Reactions in global CS

Joint	Rx	Ry	M
0	0.000000	88.725000	0.000000
8	0.000000	88.725000	0.000000

Load Case: DC3 SDL LT

Displacements of joints in global CS

VT truss span 1, for Camber
Units: feet, kips

Joint	X	Y	phi
0	0.000000	0.000000	-0.046463
1	0.000616	-0.005922	0.006620
2	0.001228	-0.011927	-0.002018
3	0.002519	-0.016549	0.000078
4	0.003810	-0.017436	0.000000
5	0.005101	-0.016549	-0.000078
6	0.006393	-0.011927	0.002018
7	0.007005	-0.005922	-0.006620
8	0.007621	0.000000	0.046463
9	0.005638	-0.005701	0.004069
10	0.004540	-0.016343	-0.000444
11	0.003081	-0.016343	0.000444
12	0.001982	-0.005701	-0.004069

Reactions in global CS

Joint	Rx	Ry	M
0	0.000000	45.500000	0.000000
8	0.000000	45.500000	0.000000

Load Case: DW FWS UTIL

Displacements of joints in global CS

Joint	X	Y	phi
0	0.000000	0.000000	-0.027878
1	0.000369	-0.003553	0.003972
2	0.000737	-0.007156	-0.001211
3	0.001511	-0.009929	0.000047
4	0.002286	-0.010462	0.000000
5	0.003061	-0.009929	-0.000047
6	0.003836	-0.007156	0.001211
7	0.004203	-0.003553	-0.003972
8	0.004572	0.000000	0.027878
9	0.003383	-0.003421	0.002441
10	0.002724	-0.009806	-0.000266
11	0.001848	-0.009806	0.000266
12	0.001189	-0.003421	-0.002441

Reactions in global CS

Joint	Rx	Ry	M
0	0.000000	27.300000	0.000000
8	0.000000	27.300000	0.000000

Load Case: DC3 SDL RT

Displacements of joints in global CS

Joint	X	Y	phi
0	0.000000	0.000000	-0.009293
1	0.000123	-0.001184	0.001324
2	0.000246	-0.002385	-0.000404
3	0.000504	-0.003310	0.000016
4	0.000762	-0.003487	0.000000
5	0.001020	-0.003310	-0.000016
6	0.001279	-0.002385	0.000404
7	0.001401	-0.001184	-0.001324
8	0.001524	0.000000	0.009293
9	0.001128	-0.001140	0.000814
10	0.000908	-0.003269	-0.000089
11	0.000616	-0.003269	0.000089
12	0.000396	-0.001140	-0.000814

Reactions in global CS

Joint	Rx	Ry	M
0	0.000000	9.100000	0.000000
8	0.000000	9.100000	0.000000

VT truss span 1, for Camber
Units: feet, kips

Structure, Load Case: DC1 STEEL WT

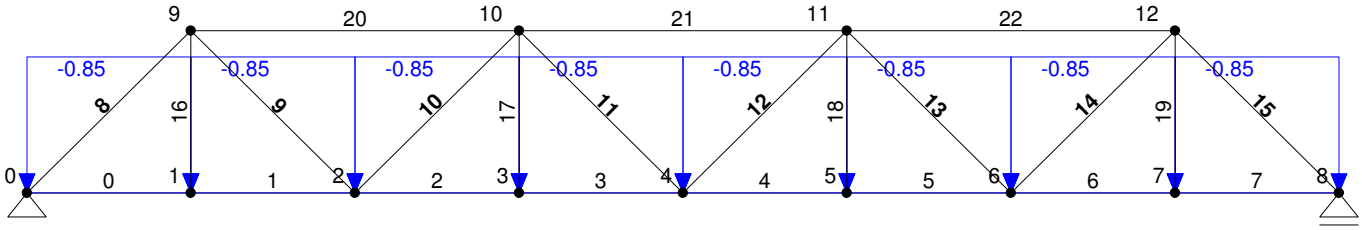

VT truss span 1, for Camber
Units: feet, kips

Structure, Load Case: DC2 DECK

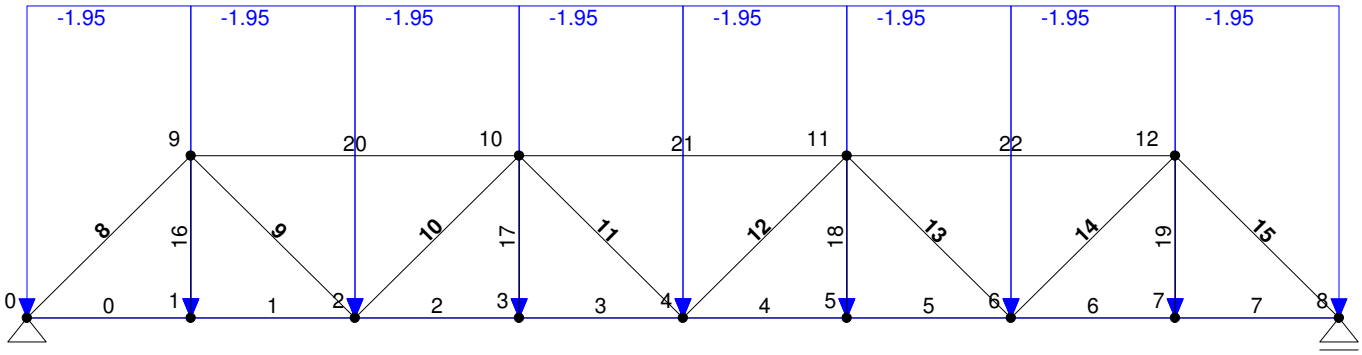

VT truss span 1, for Camber
Units: feet, kips

Structure, Load Case: DC3 SDL LT

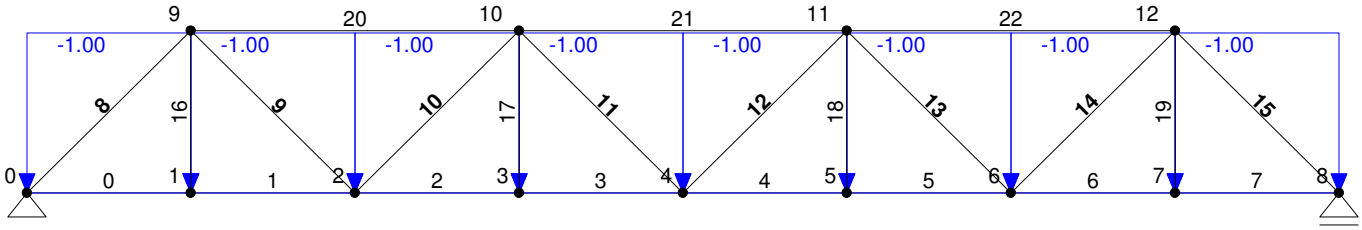

VT truss span 1, for Camber
Units: feet, kips

Structure, Load Case: DW FWS UTIL

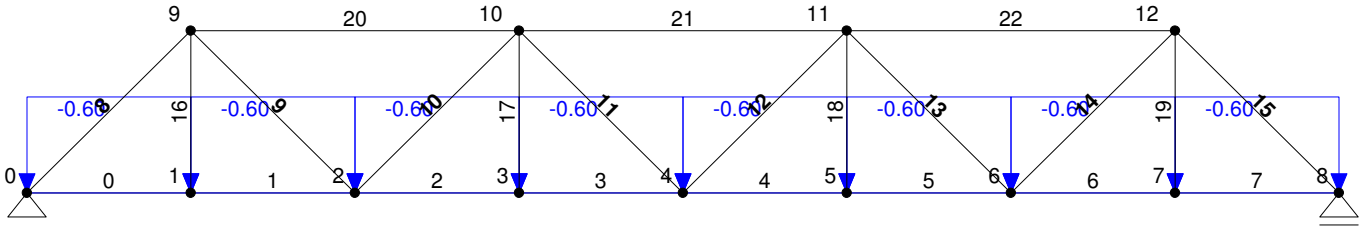

VT truss span 1, for Camber
Units: feet, kips

Structure, Load Case: DC3 SDL RT

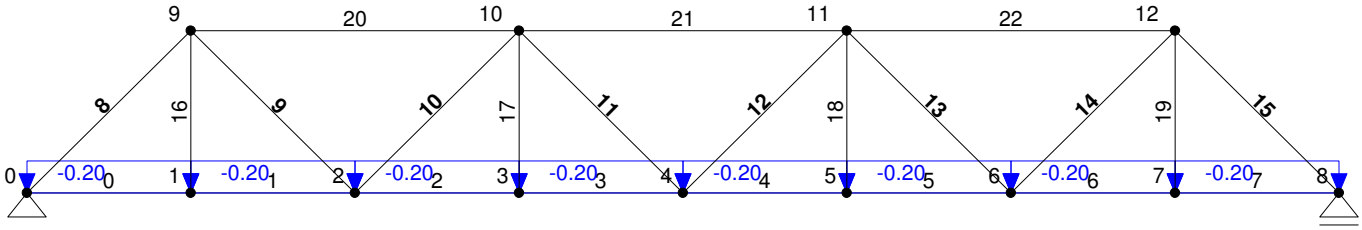

VT truss span 1, for Camber
Units: feet, kips

Axial Force Diagram, Case: DC1 STEEL WT

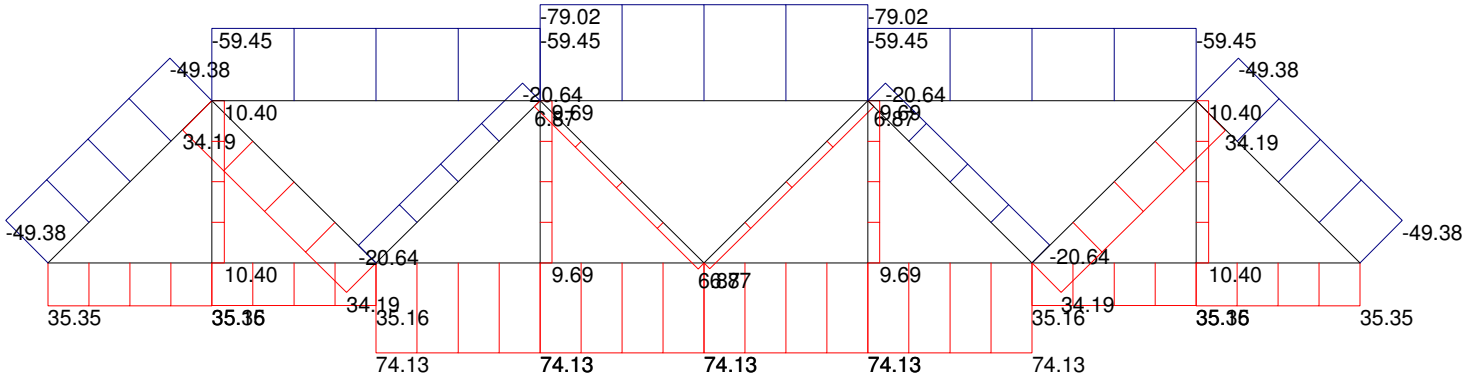

VT truss span 1, for Camber
Units: feet, kips

Axial Force Diagram, Case: DC2 DECK

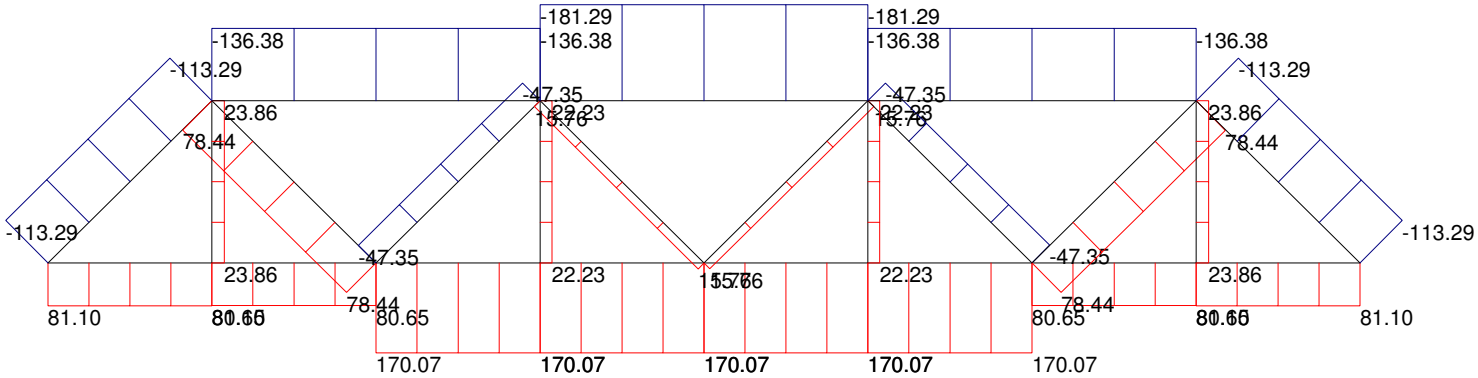

VT truss span 1, for Camber
Units: feet, kips

Axial Force Diagram, Case: DC3 SDL LT

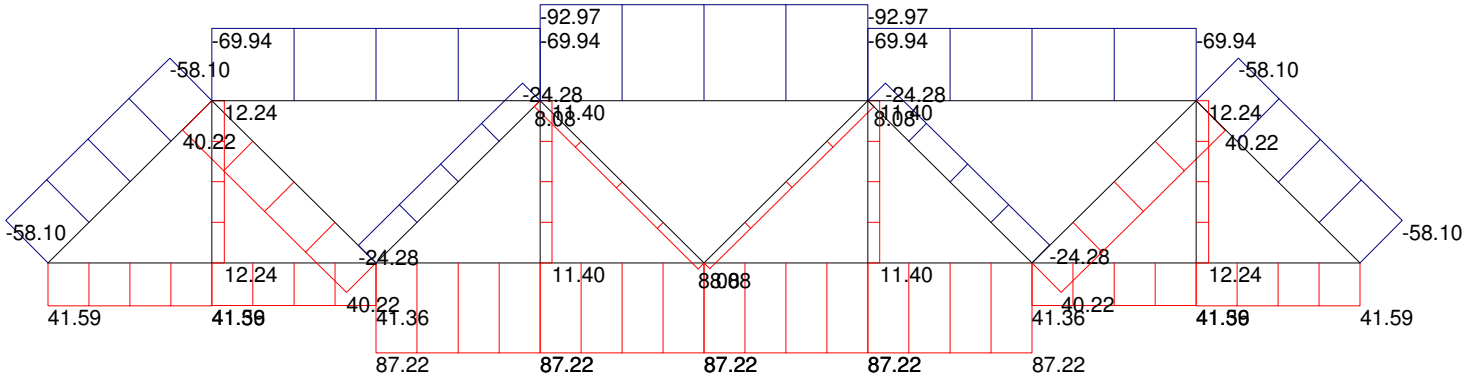

VT truss span 1, for Camber
Units: feet, kips

Axial Force Diagram, Case: DW FWS UTIL

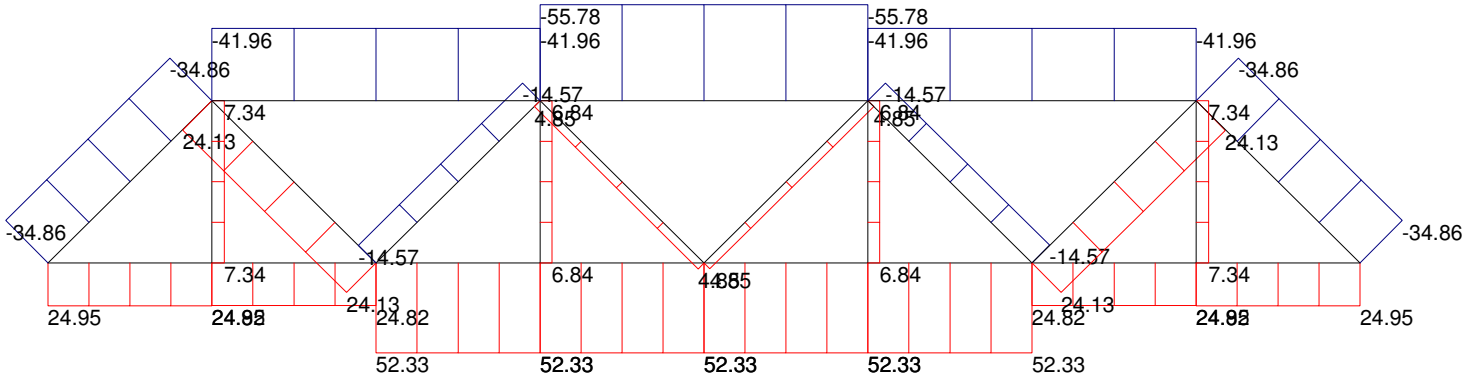

VT truss span 1, for Camber
Units: feet, kips

Axial Force Diagram, Case: DC3 SDL RT

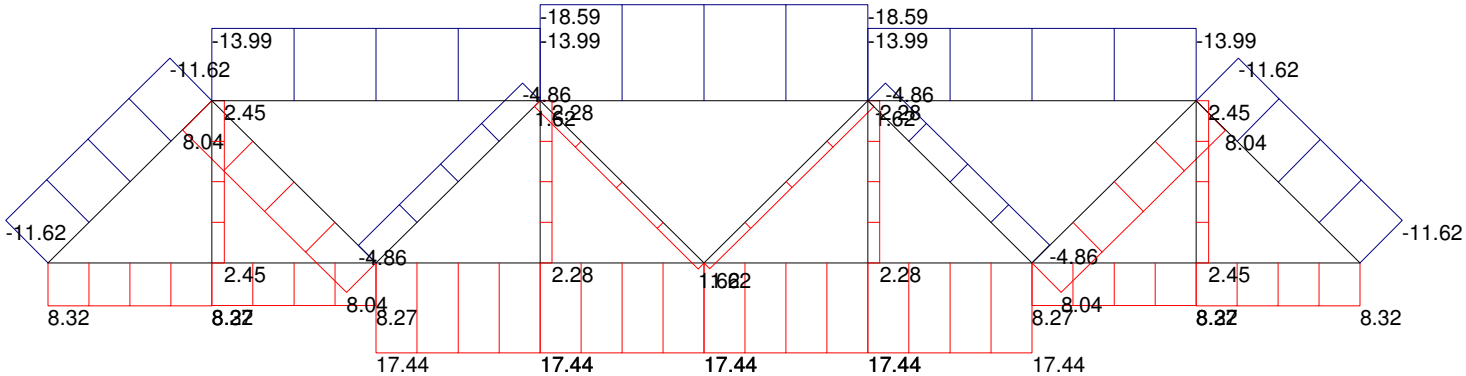

Rutland VT truss span 2, for Camber
Units: feet, kips

LinPro 2.7.5
File: C:\Users\densfo_t\Documents\LinPro files\vt truss span 2 REV 6.aln
Units: kN-m

Input Data

Coordinates of joints/supports

Joint	X	Y	Rx	Ry	Rt	SPRING.X	SPRING.Y	SPRING.ROT	CS.ROT
0	0.000	0.000	1	1	0	0.00E+000	0.00E+000	0.00E+000	0.00
1	11.100	0.000	0	0	0	0.00E+000	0.00E+000	0.00E+000	0.00
2	22.200	0.000	0	0	0	0.00E+000	0.00E+000	0.00E+000	0.00
3	33.300	0.000	0	0	0	0.00E+000	0.00E+000	0.00E+000	0.00
4	44.400	0.000	0	0	0	0.00E+000	0.00E+000	0.00E+000	0.00
5	55.500	0.000	0	0	0	0.00E+000	0.00E+000	0.00E+000	0.00
6	66.600	0.000	0	0	0	0.00E+000	0.00E+000	0.00E+000	0.00
7	77.700	0.000	0	0	0	0.00E+000	0.00E+000	0.00E+000	0.00
8	88.800	0.000	0	0	0	0.00E+000	0.00E+000	0.00E+000	0.00
9	99.900	0.000	0	0	0	0.00E+000	0.00E+000	0.00E+000	0.00
10	111.000	0.000	0	1	0	0.00E+000	0.00E+000	0.00E+000	0.00
11	11.100	11.250	0	0	0	0.00E+000	0.00E+000	0.00E+000	0.00
12	33.300	11.250	0	0	0	0.00E+000	0.00E+000	0.00E+000	0.00
13	55.500	11.250	0	0	0	0.00E+000	0.00E+000	0.00E+000	0.00
14	77.700	11.250	0	0	0	0.00E+000	0.00E+000	0.00E+000	0.00
15	99.900	11.250	0	0	0	0.00E+000	0.00E+000	0.00E+000	0.00

Members

Member	Joint I	Joint J	Type	Releases
0:	0	1	BOT CHORD1	111111
1:	1	2	BOT CHORD1	111111
2:	2	3	BOT CHORD2	111111
3:	3	4	BOT CHORD2	111111
4:	4	5	BOT CHORD3	111111
5:	5	6	BOT CHORD3	111111
6:	6	7	BOT CHORD2	111111
7:	7	8	BOT CHORD2	111111
8:	8	9	BOT CHORD1	111111
9:	9	10	BOT CHORD1	111111
10:	0	11	END POST	111111
11:	11	2	DIAGONAL	111111
12:	2	12	DIAGONAL	111111
13:	12	4	DIAGONAL	111111
14:	4	13	DIAGONAL	111111
15:	13	6	DIAGONAL	111111
16:	6	14	DIAGONAL	111111
17:	14	8	DIAGONAL	111111
18:	8	15	DIAGONAL	111111
19:	15	10	END POST	111111
20:	1	11	VERTICAL	111111
21:	3	12	VERTICAL	111111
22:	5	13	VERTICAL	111111
23:	7	14	VERTICAL	111111
24:	9	15	VERTICAL	111111
25:	11	12	TOP CHORD1	111111
26:	12	13	TOP CHORD2	111111
27:	13	14	TOP CHORD2	111111
28:	14	15	TOP CHORD1	111111

Cross Sections

0: BOT CHORD1
A= 1.840E-01
I= 1.000E-04
E= 4176000.00
alpha= 1.2E-05

1: TOP CHORD1
A= 3.470E-01
I= 1.000E-04
E= 4176000.00
alpha= 1.2E-05

2: DIAGONAL
A= 1.240E-01
I= 1.000E-04
E= 4176000.00
alpha= 1.2E-05

3: VERTICAL
A= 1.490E-01

```
          I= 1.000E-04
          E= 4176000.00
          alpha= 1.2E-05

   4: BOT CHORD2
          A= 2.021E-01
          I= 1.000E-04
          E= 4176000.00
          alpha= 1.2E-05

   5: TOP CHORD2
          A= 4.700E-01
          I= 1.000E-04
          E= 4176000.00
          alpha= 1.2E-05

   6: END POST
          A= 1.840E-01
          I= 1.000E-04
          E= 4176000.00
          alpha= 1.2E-05

   7: BOT CHORD3
          A= 2.451E-01
          I= 1.000E-04
          E= 4176000.00
          alpha= 1.2E-05



Load
   0: Distributed Load
          Load Case: DC1  STEEL WT
          Load Name: Distributed
          Coordinate System: Global Y
          a= 0.00
          b= 1.00  On Member
          p1= -1.35
          p2= -1.35

   1: Distributed Load
          Load Case: DC2  DECK
          Load Name: Distributed
          Coordinate System: Global Y
          a= 0.00
          b= 1.00  On Member
          p1= -1.95
          p2= -1.95

   2: Distributed Load
          Load Case: DC3  SDL LT
          Load Name: Distributed
          Coordinate System: Global Y
          a= 0.00
          b= 1.00  On Member
          p1= -1.10
          p2= -1.10

   3: Distributed Load
          Load Case: DW  FWS UTIL
          Load Name: Distributed
          Coordinate System: Global Y
          a= 0.00
          b= 1.00  On Member
          p1= -0.60
          p2= -0.60

   4: Distributed Load
          Load Case: blank
          Load Name: Distributed
          Coordinate System: Global Y
          a= 0.00
          b= 1.00  On Member
          p1= -1.30
          p2= -1.30

   5: Distributed Load
          Load Case: DC3  SDL RT
          Load Name: Distributed
          Coordinate System: Global Y
          a= 0.00
          b= 1.00  On Member
```

```
        p1= -0.20
        p2= -0.20

6: Distributed Load
        Load Case: L+I  MOMENT TRUCK ENV
        Load Name: Distributed
        Coordinate System: Global Y
        a= 0.00
        b= 1.00  On Member
        p1= -1.97
        p2= -1.97

7: Distributed Load
        Load Case: L+I  SHEAR TRUCK ENV
        Load Name: Distributed
        Coordinate System: Global Y
        a= 0.00
        b= 1.00  On Member
        p1= -1.02
        p2= -1.02

8: Distributed Load
        Load Case: L+I M&V LANE
        Load Name: Distributed
        Coordinate System: Global Y
        a= 0.00
        b= 1.00  On Member
        p1= -0.76
        p2= -0.76

9: Distributed Load
        Load Case: DC  DEAD LT
        Load Name: Distributed
        Coordinate System: Global Y
        a= 0.00
        b= 1.00  On Member
        p1= -4.10
        p2= -4.10

10: Point Load
        Load Case: L+I  MOMENT TRUCK ENV
        Load Name: Point
        Coordinate System: Global
        a= 0.00  Absolute from Joint I
        Force X= 0.00
        Force Y= 12.10
        Moment M= 0.00

11: Point Load
        Load Case: L+I  SHEAR TRUCK ENV
        Load Name: Point
        Coordinate System: Global
        a= 0.00  Absolute from Joint I
        Force X= 0.00
        Force Y= -94.00
        Moment M= 0.00

12: Point Load
        Load Case: FATIGUE MOMENT ENV
        Load Name: Point
        Coordinate System: Global
        a= 0.00  Absolute from Joint I
        Force X= 0.00
        Force Y= -21.40
        Moment M= 0.00

13: Point Load
        Load Case: FATIGUE MOMENT ENV
        Load Name: Point
        Coordinate System: Global
        a= 0.00  Absolute from Joint I
        Force X= 0.00
        Force Y= 21.40
        Moment M= 0.00

14: Point Load
        Load Case: FATIGUE SHEAR ENV
        Load Name: Point
        Coordinate System: Global
        a= 0.00  Absolute from Joint I
        Force X= 0.00
        Force Y= -75.90
```

```
        Moment M= 0.00

15: Distributed Load
        Load Case: FATIGUE MOMENT ENV
        Load Name: Distributed
        Coordinate System: Global Y
        a= 0.00
        b= 1.00  On Member
        p1= -1.88
        p2= -1.88

16: Distributed Load
        Load Case: FATIGUE SHEAR ENV
        Load Name: Distributed
        Coordinate System: Global Y
        a= 0.00
        b= 1.00  On Member
        p1= -1.02
        p2= -1.02

17: Distributed Load
        Load Case: FATIGUE MOMENT ENV
        Load Name: Distributed
        Coordinate System: Global Y
        a= 0.00
        b= 1.00  On Member
        p1= -1.62
        p2= -1.62

18: Distributed Load
        Load Case: FATIGUE SHEAR ENV
        Load Name: Distributed
        Coordinate System: Global Y
        a= 0.00
        b= 1.00  On Member
        p1= -0.88
        p2= -0.88

19: Point Load
        Load Case: FATIGUE MOMENT ENV
        Load Name: Point
        Coordinate System: Global
        a= 0.00  Absolute from Joint I
        Force X= 0.00
        Force Y= 18.50
        Moment M= 0.00

20: Point Load
        Load Case: FATIGUE SHEAR ENV
        Load Name: Point
        Coordinate System: Global
        a= 0.00  Absolute from Joint I
        Force X= 0.00
        Force Y= -65.60
        Moment M= 0.00

21: Distributed Load
        Load Case: DC1  STEEL WT
        Load Name: Distributed
        Coordinate System: Global Y
        a= 0.00
        b= 1.00  On Member
        p1= -1.10
        p2= -1.10

22: Distributed Load
        Load Case: DC3  SDL LT
        Load Name: Distributed
        Coordinate System: Global Y
        a= 0.00
        b= 1.00  On Member
        p1= -1.05
        p2= -1.05

23: Distributed Load
        Load Case: blank
        Load Name: Distributed
        Coordinate System: Global Y
        a= 0.00
        b= 1.00  On Member
        p1= -1.10
        p2= -1.10
```

```
24: Distributed Load
        Load Case: FATIGUE MOMENT ENV
        Load Name: Distributed
        Coordinate System: Global Y
        a= 0.00
        b= 1.00  On Member
        p1= -1.06
        p2= -1.06

25: Distributed Load
        Load Case: FATIGUE SHEAR ENV
        Load Name: Distributed
        Coordinate System: Global Y
        a= 0.00
        b= 1.00  On Member
        p1= -0.57
        p2= -0.57

26: Point Load
        Load Case: FATIGUE MOMENT ENV
        Load Name: Point
        Coordinate System: Global
        a= 0.00  Absolute from Joint I
        Force X= 0.00
        Force Y= 12.10
        Moment M= 0.00

27: Point Load
        Load Case: FATIGUE SHEAR ENV
        Load Name: Point
        Coordinate System: Global
        a= 0.00  Absolute from Joint I
        Force X= 0.00
        Force Y= -42.80
        Moment M= 0.00

28: Distributed Load
        Load Case: blank
        Load Name: Distributed
        Coordinate System: Global Y
        a= 0.00
        b= 1.00  On Member
        p1= 0.00
        p2= 0.00

29: Distributed Load
        Load Case: blank
        Load Name:
        Coordinate System: Global Y
        a= 0.00
        b= 1.00  On Member
        p1= 0.00
        p2= 0.00

30: Distributed Load
        Load Case: blank
        Load Name: Distributed2
        Coordinate System: Global Y
        a= 0.00
        b= 1.00  On Member
        p1= 0.00
        p2= 0.00

31: Distributed Load
        Load Case: L+I MOMENT 3S2 ENV
        Load Name: Distributed
        Coordinate System: Global Y
        a= 0.00
        b= 1.00  On Member
        p1= -1.73
        p2= -1.73

32: Distributed Load
        Load Case: L+I SHEAR 3S2 ENV
        Load Name: Distributed
        Coordinate System: Global Y
        a= 0.00
        b= 1.00  On Member
        p1= -0.97
        p2= -0.97
```

```
33: Distributed Load
        Load Case: L+I MOMENT 6AXLE ENV
        Load Name: Distributed
        Coordinate System: Global Y
        a= 0.00
        b= 1.00  On Member
        p1= -3.26
        p2= -3.26

34: Distributed Load
        Load Case: L+I SHEAR 6AXLE ENV
        Load Name: Distributed
        Coordinate System: Global Y
        a= 0.00
        b= 1.00  On Member
        p1= -1.77
        p2= -1.77

35: Distributed Load
        Load Case: L+I MOMENT 3AXLE ENV
        Load Name: Distributed
        Coordinate System: Global Y
        a= 0.00
        b= 1.00  On Member
        p1= -1.58
        p2= -1.58

36: Distributed Load
        Load Case: L+I SHEAR 3AXLE ENV
        Load Name: Distributed
        Coordinate System: Global Y
        a= 0.00
        b= 1.00  On Member
        p1= -0.81
        p2= -0.81

37: Distributed Load
        Load Case: L+I MOMENT 4AXLE ENV
        Load Name: Distributed
        Coordinate System: Global Y
        a= 0.00
        b= 1.00  On Member
        p1= -1.79
        p2= -1.79

38: Distributed Load
        Load Case: L+I SHEAR 4AXLE ENV
        Load Name: Distributed
        Coordinate System: Global Y
        a= 0.00
        b= 1.00  On Member
        p1= -0.93
        p2= -0.93

39: Distributed Load
        Load Case: L+I MOMENT 5AXLE ENV
        Load Name: Distributed
        Coordinate System: Global Y
        a= 0.00
        b= 1.00  On Member
        p1= -1.86
        p2= -1.86

40: Distributed Load
        Load Case: L+I SHEAR 5AXLE ENV
        Load Name: Distributed
        Coordinate System: Global Y
        a= 0.00
        b= 1.00  On Member
        p1= -1.02
        p2= -1.02

41: Distributed Load
        Load Case: L+I MOMENT H20 ENV
        Load Name: Distributed
        Coordinate System: Global Y
        a= 0.00
        b= 1.00  On Member
        p1= -1.07
        p2= -1.07

42: Distributed Load
```

```
        Load Case: L+I SHEAR H20 ENV
        Load Name: Distributed
        Coordinate System: Global Y
        a= 0.00
        b= 1.00  On Member
        p1= -0.54
        p2= -0.54

43: Point Load
        Load Case: L+I MOMENT 3S2 ENV
        Load Name: Point
        Coordinate System: Global
        a= 0.00  Absolute from Joint I
        Force X= 0.00
        Force Y= 14.20
        Moment M= 0.00

44: Point Load
        Load Case: L+I SHEAR 3S2 ENV
        Load Name: Point
        Coordinate System: Global
        a= 0.00  Absolute from Joint I
        Force X= 0.00
        Force Y= -72.70
        Moment M= 0.00

45: Point Load
        Load Case: L+I MOMENT 6AXLE ENV
        Load Name: Point
        Coordinate System: Global
        a= 0.00  Absolute from Joint I
        Force X= 0.00
        Force Y= 50.20
        Moment M= 0.00

46: Point Load
        Load Case: L+I SHEAR 6AXLE ENV
        Load Name: Point
        Coordinate System: Global
        a= 0.00  Absolute from Joint I
        Force X= 0.00
        Force Y= -118.00
        Moment M= 0.00

47: Point Load
        Load Case: L+I MOMENT 3AXLE ENV
        Load Name: Point
        Coordinate System: Global
        a= 0.00  Absolute from Joint I
        Force X= 0.00
        Force Y= 5.90
        Moment M= 0.00

48: Point Load
        Load Case: L+I SHEAR 3AXLE ENV
        Load Name: Point
        Coordinate System: Global
        a= 0.00  Absolute from Joint I
        Force X= 0.00
        Force Y= -80.70
        Moment M= 0.00

49: Point Load
        Load Case: L+I MOMENT 4AXLE ENV
        Load Name: Point
        Coordinate System: Global
        a= 0.00  Absolute from Joint I
        Force X= 0.00
        Force Y= 7.20
        Moment M= 0.00

50: Point Load
        Load Case: L+I SHEAR 4AXLE ENV
        Load Name: Point
        Coordinate System: Global
        a= 0.00  Absolute from Joint I
        Force X= 0.00
        Force Y= -89.30
        Moment M= 0.00

51: Point Load
        Load Case: L+I MOMENT 5AXLE ENV
```

```
          Load Name: Point
          Coordinate System: Global
          a= 0.00  Absolute from Joint I
          Force X= 0.00
          Force Y= 11.60
          Moment M= 0.00

   52: Point Load
          Load Case: L+I SHEAR 5AXLE ENV
          Load Name: Point
          Coordinate System: Global
          a= 0.00  Absolute from Joint I
          Force X= 0.00
          Force Y= -83.80
          Moment M= 0.00

   53: Point Load
          Load Case: L+I MOMENT H20 ENV
          Load Name: Point
          Coordinate System: Global
          a= 0.00  Absolute from Joint I
          Force X= 0.00
          Force Y= 3.00
          Moment M= 0.00

   54: Point Load
          Load Case: L+I SHEAR H20 ENV
          Load Name: Point
          Coordinate System: Global
          a= 0.00  Absolute from Joint I
          Force X= 0.00
          Force Y= -56.60
          Moment M= 0.00

Load Applied on Joints
   Joint   Applied Loads
   5:      10, 11, 26, 27, 43, 44, 45, 46, 47, 48, 49, 50, 51, 52, 53, 54


Load Applied on Members
   Member  Applied Loads
   0:      1, 3, 5, 6, 7, 8, 9, 21, 22, 24, 25, 31, 32, 33, 34, 35, 36, 37, 38, 39, 40, 41, 42
   1:      1, 3, 5, 6, 7, 8, 9, 21, 22, 24, 25, 31, 32, 33, 34, 35, 36, 37, 38, 39, 40, 41, 42
   2:      1, 3, 5, 6, 7, 8, 9, 21, 22, 24, 25, 31, 32, 33, 34, 35, 36, 37, 38, 39, 40, 41, 42
   3:      1, 3, 5, 6, 7, 8, 9, 21, 22, 24, 25, 31, 32, 33, 34, 35, 36, 37, 38, 39, 40, 41, 42
   4:      1, 3, 5, 6, 7, 8, 9, 21, 22, 24, 25, 31, 32, 33, 34, 35, 36, 37, 38, 39, 40, 41, 42
   5:      1, 3, 5, 6, 7, 8, 9, 21, 22, 24, 25, 31, 32, 33, 34, 35, 36, 37, 38, 39, 40, 41, 42
   6:      1, 3, 5, 6, 7, 8, 9, 21, 22, 24, 25, 31, 32, 33, 34, 35, 36, 37, 38, 39, 40, 41, 42
   7:      1, 3, 5, 6, 7, 8, 9, 21, 22, 24, 25, 31, 32, 33, 34, 35, 36, 37, 38, 39, 40, 41, 42
   8:      1, 3, 5, 6, 7, 8, 9, 21, 22, 24, 25, 31, 32, 33, 34, 35, 36, 37, 38, 39, 40, 41, 42
   9:      1, 3, 5, 6, 7, 8, 9, 21, 22, 24, 25, 31, 32, 33, 34, 35, 36, 37, 38, 39, 40, 41, 42


Load Cases
   0: DC1  STEEL WT
   1: DC2  DECK
   2: DC3  SDL LT
   3: DW  FWS UTIL
   4: L+I  MOMENT TRUCK ENV
   5: L+I  SHEAR TRUCK ENV
   6: L+I M&V LANE
   7: blank
   8: DC3  SDL RT
   9: DC  DEAD LT
   10: FATIGUE MOMENT ENV
   11: FATIGUE SHEAR ENV
   12: L+I MOMENT 3S2 ENV
   13: L+I SHEAR 3S2 ENV
   14: L+I MOMENT 6AXLE ENV
   15: L+I SHEAR 6AXLE ENV
   16: L+I MOMENT 3AXLE ENV
   17: L+I SHEAR 3AXLE ENV
   18: L+I MOMENT 4AXLE ENV
   19: L+I SHEAR 4AXLE ENV
   20: L+I MOMENT 5AXLE ENV
   21: L+I SHEAR 5AXLE ENV
   22: L+I MOMENT H20 ENV
   23: L+I SHEAR H20 ENV


Load Combinations
   0: SVC I DEAD DEFL LT = 1.00xDC1  STEEL WT + 1.00xDC2  DECK + 1.00xDC3  SDL LT + 1.00xDW  FWS UTIL + 0.00xL+I  MOME
```

Rutland VT truss span 2, for Camber
Units: feet, kips

```
M&V LANE + 0.00xblank + 0.00xDC3  SDL RT + 0.00xDC  DEAD LT + 0.00xFATIGUE MOMENT ENV + 0.00xFATIGUE SHEAR ENV + 0.00x
MOMENT 6AXLE ENV + 0.00xL+I SHEAR 6AXLE ENV + 0.00xL+I MOMENT 3AXLE ENV + 0.00xL+I SHEAR 3AXLE ENV + 0.00xL+I MOMENT 4
MOMENT 5AXLE ENV + 0.00xL+I SHEAR 5AXLE ENV + 0.00xL+I MOMENT H20 ENV + 0.00xL+I SHEAR H20 ENV
   1: SCV I DEAD DEFL RT = 1.00xDC1  STEEL WT + 1.00xDC2  DECK + 0.00xDC3  SDL LT + 1.00xDW  FWS UTIL + 0.00xL+I  MOME
M&V LANE + 0.00xblank + 1.00xDC3  SDL RT + 0.00xDC  DEAD LT + 0.00xFATIGUE MOMENT ENV + 0.00xFATIGUE SHEAR ENV + 0.00x
MOMENT 6AXLE ENV + 0.00xL+I SHEAR 6AXLE ENV + 0.00xL+I MOMENT 3AXLE ENV + 0.00xL+I SHEAR 3AXLE ENV + 0.00xL+I MOMENT 4
MOMENT 5AXLE ENV + 0.00xL+I SHEAR 5AXLE ENV + 0.00xL+I MOMENT H20 ENV + 0.00xL+I SHEAR H20 ENV
   2: STRI MOMENT = 0.00xDC1  STEEL WT + 0.00xDC2  DECK + 0.00xDC3  SDL LT + 1.50xDW  FWS UTIL + 1.75xL+I  MOMENT TRUC
LANE + 0.00xblank + 0.00xDC3  SDL RT + 1.25xDC  DEAD LT + 0.00xFATIGUE MOMENT ENV + 0.00xFATIGUE SHEAR ENV + 0.00xL+I
MOMENT 6AXLE ENV + 0.00xL+I SHEAR 6AXLE ENV + 0.00xL+I MOMENT 3AXLE ENV + 0.00xL+I SHEAR 3AXLE ENV + 0.00xL+I MOMENT 4
MOMENT 5AXLE ENV + 0.00xL+I SHEAR 5AXLE ENV + 0.00xL+I MOMENT H20 ENV + 0.00xL+I SHEAR H20 ENV
   3: STRI SHEAR = 0.00xDC1  STEEL WT + 0.00xDC2  DECK + 0.00xDC3  SDL LT + 1.50xDW  FWS UTIL + 0.00xL+I  MOMENT TRUCK
LANE + 0.00xblank + 0.00xDC3  SDL RT + 1.25xDC  DEAD LT + 0.00xFATIGUE MOMENT ENV + 0.00xFATIGUE SHEAR ENV + 0.00xL+I
MOMENT 6AXLE ENV + 0.00xL+I SHEAR 6AXLE ENV + 0.00xL+I MOMENT 3AXLE ENV + 0.00xL+I SHEAR 3AXLE ENV + 0.00xL+I MOMENT 4
MOMENT 5AXLE ENV + 0.00xL+I SHEAR 5AXLE ENV + 0.00xL+I MOMENT H20 ENV + 0.00xL+I SHEAR H20 ENV
   4: SVC II MOMENT = 0.00xDC1  STEEL WT + 0.00xDC2  DECK + 0.00xDC3  SDL LT + 1.00xDW  FWS UTIL + 1.30xL+I  MOMENT TR
LANE + 0.00xblank + 0.00xDC3  SDL RT + 1.00xDC  DEAD LT + 0.00xFATIGUE MOMENT ENV + 0.00xFATIGUE SHEAR ENV + 0.00xL+I
MOMENT 6AXLE ENV + 0.00xL+I SHEAR 6AXLE ENV + 0.00xL+I MOMENT 3AXLE ENV + 0.00xL+I SHEAR 3AXLE ENV + 0.00xL+I MOMENT 4
MOMENT 5AXLE ENV + 0.00xL+I SHEAR 5AXLE ENV + 0.00xL+I MOMENT H20 ENV + 0.00xL+I SHEAR H20 ENV
   5: SVCII SHEAR = 0.00xDC1  STEEL WT + 0.00xDC2  DECK + 0.00xDC3  SDL LT + 1.00xDW  FWS UTIL + 0.00xL+I  MOMENT TRUC
LANE + 0.00xblank + 0.00xDC3  SDL RT + 1.00xDC  DEAD LT + 0.00xFATIGUE MOMENT ENV + 0.00xFATIGUE SHEAR ENV + 0.00xL+I
MOMENT 6AXLE ENV + 0.00xL+I SHEAR 6AXLE ENV + 0.00xL+I MOMENT 3AXLE ENV + 0.00xL+I SHEAR 3AXLE ENV + 0.00xL+I MOMENT 4
MOMENT 5AXLE ENV + 0.00xL+I SHEAR 5AXLE ENV + 0.00xL+I MOMENT H20 ENV + 0.00xL+I SHEAR H20 ENV
   6: FATGI MOMENT = 0.00xDC1  STEEL WT + 0.00xDC2  DECK + 0.00xDC3  SDL LT + 0.00xDW  FWS UTIL + 0.00xL+I  MOMENT TRU
LANE + 0.00xblank + 0.00xDC3  SDL RT + 0.00xDC  DEAD LT + 1.50xFATIGUE MOMENT ENV + 0.00xFATIGUE SHEAR ENV + 0.00xL+I
MOMENT 6AXLE ENV + 0.00xL+I SHEAR 6AXLE ENV + 0.00xL+I MOMENT 3AXLE ENV + 0.00xL+I SHEAR 3AXLE ENV + 0.00xL+I MOMENT 4
MOMENT 5AXLE ENV + 0.00xL+I SHEAR 5AXLE ENV + 0.00xL+I MOMENT H20 ENV + 0.00xL+I SHEAR H20 ENV
   7: FATGI SHEAR = 0.00xDC1  STEEL WT + 0.00xDC2  DECK + 0.00xDC3  SDL LT + 0.00xDW  FWS UTIL + 0.00xL+I  MOMENT TRUC
LANE + 0.00xblank + 0.00xDC3  SDL RT + 0.00xDC  DEAD LT + 0.00xFATIGUE MOMENT ENV + 1.50xFATIGUE SHEAR ENV + 0.00xL+I
MOMENT 6AXLE ENV + 0.00xL+I SHEAR 6AXLE ENV + 0.00xL+I MOMENT 3AXLE ENV + 0.00xL+I SHEAR 3AXLE ENV + 0.00xL+I MOMENT 4
MOMENT 5AXLE ENV + 0.00xL+I SHEAR 5AXLE ENV + 0.00xL+I MOMENT H20 ENV + 0.00xL+I SHEAR H20 ENV


Masses


Masses Applied on Joints
   Joint   Applied Masses


==========================================================================
Static Analysis Results
__________________________________________________________________________


__________________________________________________________________________
Load Case: DC1  STEEL WT

Displacements of joints in global CS
     Joint                X                Y              phi
         0          0.000000         0.000000        -0.048338
         1          0.000803        -0.012122         0.006458
         2          0.001603        -0.022475        -0.002459
         3          0.003280        -0.031092        -0.000213
         4          0.004957        -0.035220        -0.000301
         5          0.006601        -0.037430         0.000000
         6          0.008245        -0.035220         0.000301
         7          0.009922        -0.031092         0.000213
         8          0.011599        -0.022475         0.002459
         9          0.012398        -0.012122        -0.006458
        10          0.013202         0.000000         0.048338
        11          0.009739        -0.011884         0.003845
        12          0.008247        -0.030870        -0.000727
        13          0.006601        -0.037210         0.000000
        14          0.004954        -0.030870         0.000727
        15          0.003463        -0.011884        -0.003845

Reactions in global CS
     Joint               Rx               Ry                M
         0          0.000000        61.050000         0.000000
        10          0.000000        61.050000         0.000000


__________________________________________________________________________
Load Case: DC2  DECK

Displacements of joints in global CS
     Joint                X                Y              phi
         0          0.000000         0.000000        -0.085690
         1          0.001424        -0.021489         0.011449
         2          0.002842        -0.039843        -0.004359
         3          0.005815        -0.055117        -0.000378
```

4	0.008787	-0.062435	-0.000534
5	0.011702	-0.066354	0.000000
6	0.014616	-0.062435	0.000534
7	0.017588	-0.055117	0.000378
8	0.020561	-0.039843	0.004359
9	0.021979	-0.021489	-0.011449
10	0.023403	0.000000	0.085690
11	0.017264	-0.021068	0.006816
12	0.014620	-0.054725	-0.001288
13	0.011702	-0.065963	0.000000
14	0.008783	-0.054725	0.001288
15	0.006139	-0.021068	-0.006816

Reactions in global CS

Joint	Rx	Ry	M
0	0.000000	108.225000	0.000000
10	0.000000	108.225000	0.000000

Load Case: DC3 SDL LT

Displacements of joints in global CS

Joint	X	Y	phi
0	0.000000	0.000000	-0.046141
1	0.000767	-0.011571	0.006165
2	0.001530	-0.021454	-0.002347
3	0.003131	-0.029678	-0.000204
4	0.004732	-0.033619	-0.000288
5	0.006301	-0.035729	0.000000
6	0.007870	-0.033619	0.000288
7	0.009471	-0.029678	0.000204
8	0.011071	-0.021454	0.002347
9	0.011835	-0.011571	-0.006165
10	0.012602	0.000000	0.046141
11	0.009296	-0.011344	0.003670
12	0.007873	-0.029467	-0.000693
13	0.006301	-0.035518	0.000000
14	0.004729	-0.029467	0.000693
15	0.003306	-0.011344	-0.003670

Reactions in global CS

Joint	Rx	Ry	M
0	0.000000	58.275000	0.000000
10	0.000000	58.275000	0.000000

Load Case: DW FWS UTIL

Displacements of joints in global CS

Joint	X	Y	phi
0	0.000000	0.000000	-0.026366
1	0.000438	-0.006612	0.003523
2	0.000874	-0.012259	-0.001341
3	0.001789	-0.016959	-0.000116
4	0.002704	-0.019211	-0.000164
5	0.003600	-0.020417	0.000000
6	0.004497	-0.019211	0.000164
7	0.005412	-0.016959	0.000116
8	0.006326	-0.012259	0.001341
9	0.006763	-0.006612	-0.003523
10	0.007201	0.000000	0.026366
11	0.005312	-0.006482	0.002097
12	0.004499	-0.016838	-0.000396
13	0.003600	-0.020296	0.000000
14	0.002702	-0.016838	0.000396
15	0.001889	-0.006482	-0.002097

Reactions in global CS

Joint	Rx	Ry	M
0	0.000000	33.300000	0.000000
10	0.000000	33.300000	0.000000

Load Case: DC3 SDL RT

Displacements of joints in global CS

Joint	X	Y	phi
0	0.000000	0.000000	-0.008789
1	0.000146	-0.002204	0.001174

Rutland VT truss span 2, for Camber
Units: feet, kips

2	0.000291	-0.004086	-0.000447
3	0.000596	-0.005653	-0.000039
4	0.000901	-0.006404	-0.000055
5	0.001200	-0.006806	0.000000
6	0.001499	-0.006404	0.000055
7	0.001804	-0.005653	0.000039
8	0.002109	-0.004086	0.000447
9	0.002254	-0.002204	-0.001174
10	0.002400	0.000000	0.008789
11	0.001771	-0.002161	0.000699
12	0.001500	-0.005613	-0.000132
13	0.001200	-0.006765	0.000000
14	0.000901	-0.005613	0.000132
15	0.000630	-0.002161	-0.000699

Reactions in global CS

Joint	Rx	Ry	M
0	0.000000	11.100000	0.000000
10	0.000000	11.100000	0.000000

Rutland VT truss span 2, for Camber
Units: feet, kips

Structure, Load Case: DC1 STEEL WT

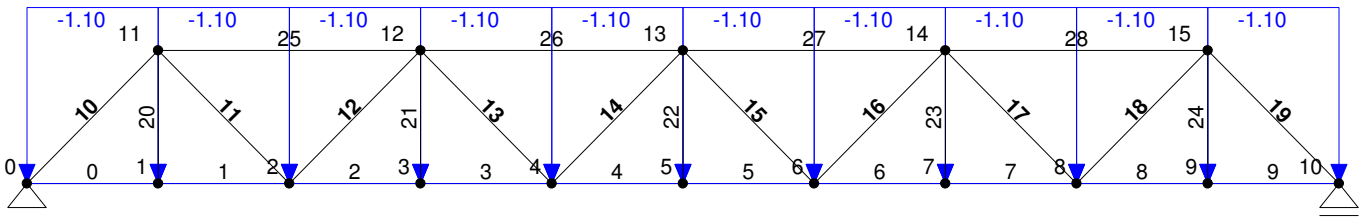

Rutland VT truss span 2, for Camber
Units: feet, kips

Structure, Load Case: DC2 DECK

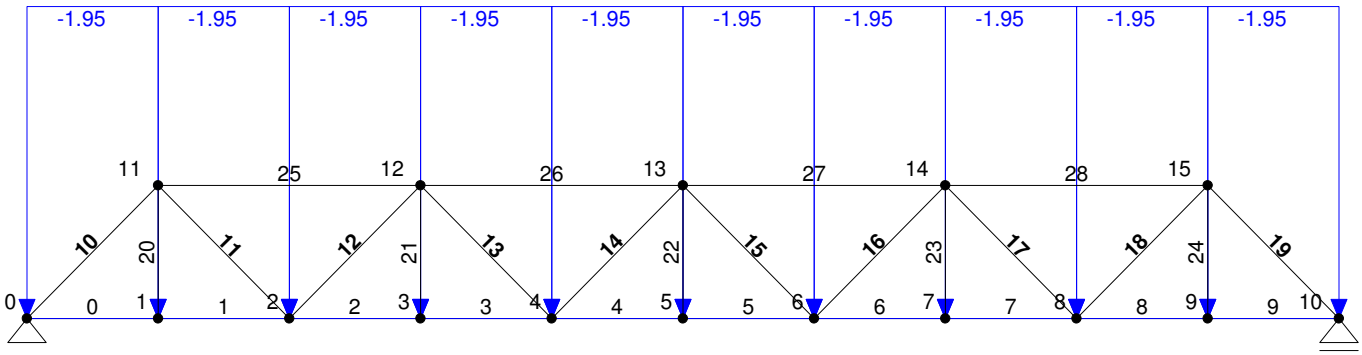

Rutland VT truss span 2, for Camber
Units: feet, kips

Structure, Load Case: DC3 SDL LT

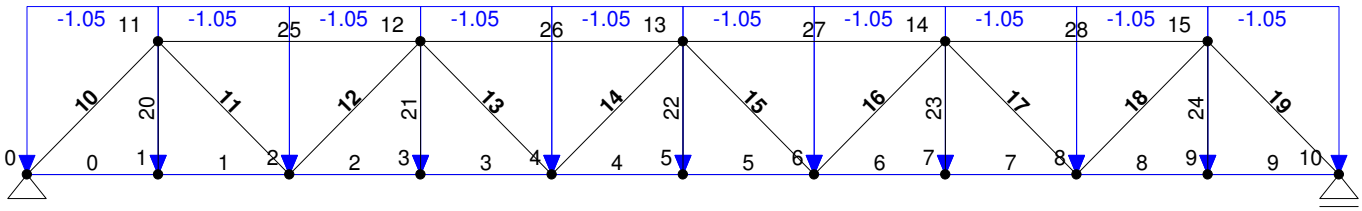

Rutland VT truss span 2, for Camber
Units: feet, kips

Structure, Load Case: DW FWS UTIL

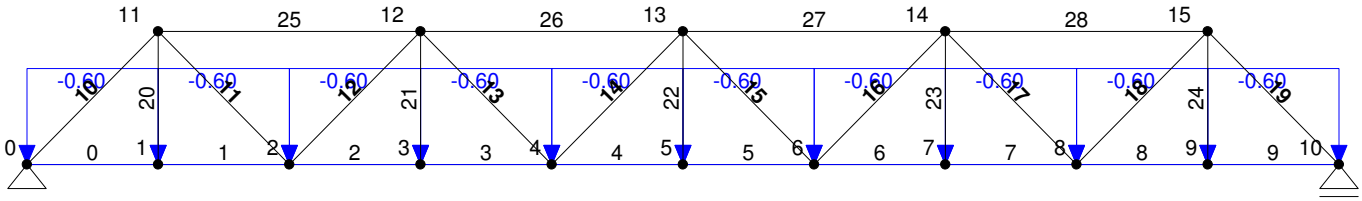

Rutland VT truss span 2, for Camber
Units: feet, kips

Structure, Load Case: DC3 SDL RT

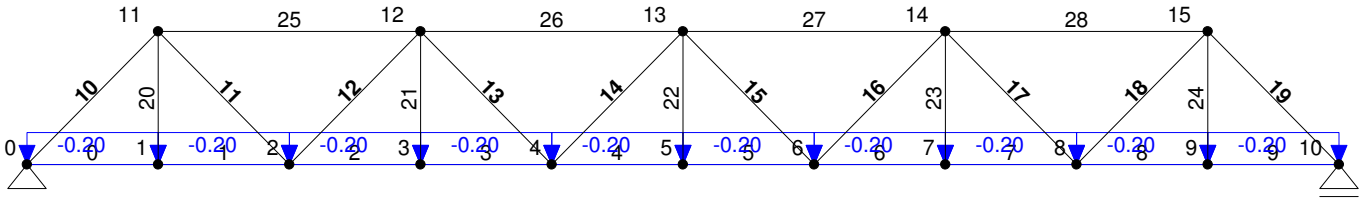

Rutland VT truss span 2, for Camber
Units: feet, kips

Axial Force Diagram, Case: DC1 STEEL WT

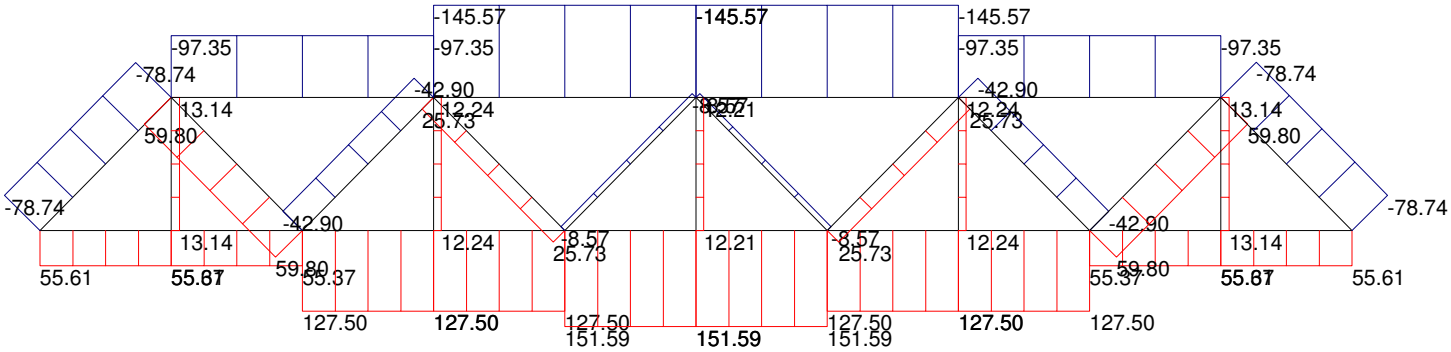

Rutland VT truss span 2, for Camber
Units: feet, kips

Axial Force Diagram, Case: DC2 DECK

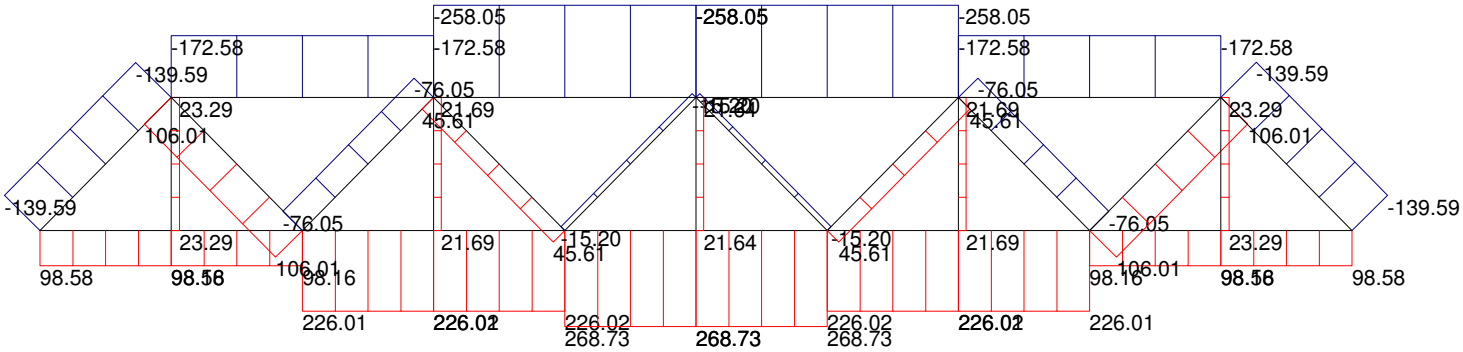

Rutland VT truss span 2, for Camber
Units: feet, kips

Axial Force Diagram, Case: DC3 SDL LT

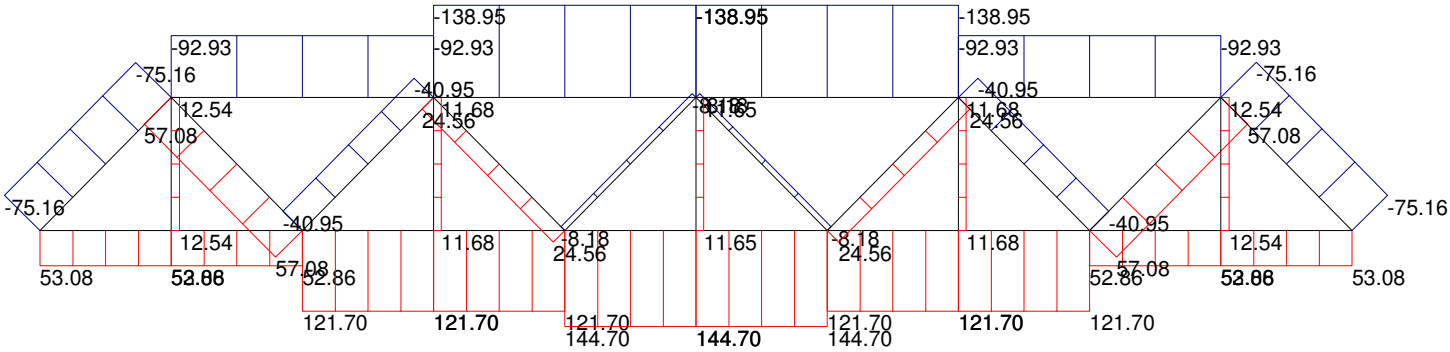

Rutland VT truss span 2, for Camber
Units: feet, kips

Axial Force Diagram, Case: DW FWS UTIL

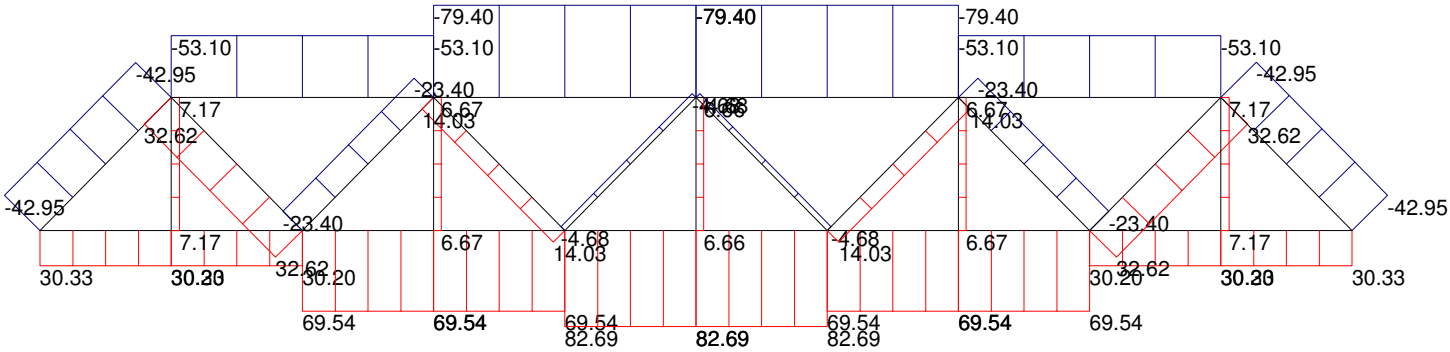

Rutland VT truss span 2, for Camber
Units: feet, kips

Axial Force Diagram, Case: DC3 SDL RT

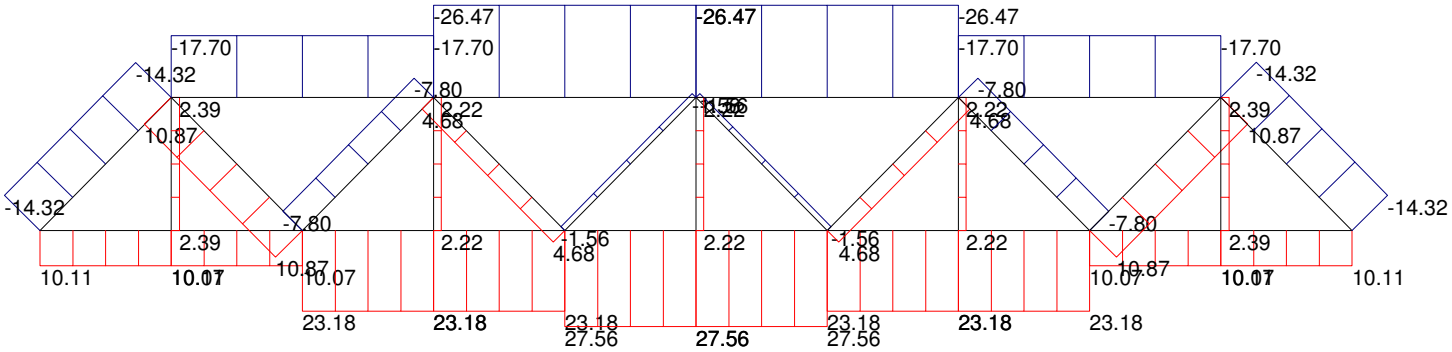

K. BEARING DESIGN

SUPERSTRUCTURE DESIGN CALCULATIONS FOR BRIDGE #17, RUTLAND, VT

Vtrans
Truss Replacement
Rutland, VT

Design by: TD
Check by: MAB

ELASTOMERIC BEARING, STEEL REINFORCED
DESIGN METHOD A (14.7.6)
RECTANGULAR

		USE		USE	
input:		ABUT		PIER	
	Dead load reaction DC+DW = 4.7K/FT * (111/2+0.75)	265	k	265	k
	Live load reaction (No IM) = [72K * (111-9.33)/111 + 0.64K/FT*111/2)] * 1.18	120	k	120	k
	length Temp change	0	ft	111	ft
	delta Temp change	75	degreesF	75	degreesF
	set pad at max Temp	45	degreesF	45	degreesF
	alpha t	0.0000065	'/'degreeF	0.0000065	'/'degreeF
	cover layer thickness	0.25	in.	0.25	in.
	steel shim thickness	0.125	in.	0.125	in.
	Gmin	0.130	ksi	0.130	ksi
	Gmax	0.200	ksi	0.200	ksi
	Fy steel reinforcement	36	ksi	36	ksi
	delta Fth, Category A (LRFD 6.6)	24	ksi	24	ksi
check:					
	Lmin 14.7.6.3.2-7	17.8	in.	17.8	in.
	Lmin 14.7.6.3.2-8	17.5	in.	17.5	in.
	n min for rotation 14.7.6.1	2.8	layers	2.8	layers
	trial W/L	1.00		1.00	
	W trial	17.8	in.	17.8	in.
use:					
	hri internal layer thickness	0.6	in.	0.6	in.
	Length, L	18	in.	18	in.
	Width, W	18	in.	18	in.
	n number of internal layers	3	layers	3	layers
	actual W/L	1.00		1.00	
	elastomer volume	583	cu.in.	583	cu.in.
output:					
14.7.5.1-1	Si shape factor	7.5		7.5	
14.7.6.1	Si^2/n	18.8		18.8	
	check < 20	OK		OK	
	Area of Bearing	324	in^2	324	in^2
14.7.6.3.4	horz deflection deltaS	0.00	in	0.65	in
	2*deltaS	0.00	in	1.30	in
	hrt total int. elastomer thickness	1.80	in	1.80	in
	check hrt>2*delta S	OK		OK	
14.7.6.3.2	compressive stress				
	stress due to load	1.19	ksi	1.19	ksi
	sigma-s resistance	1.22	ksi	1.22	ksi
	check load<resist.	OK		OK	

ELASTOMERIC BEARING, STEEL REINFORCED

		ABUT	PIER
14.7.6.3.6	brg thickness, t	2.800 in	2.800 in
	(Min Dim)/3	6.0 in	6.0 in
	check t<=D/3	OK	OK
	pad shear force from delta T=		
	G*A*deltaS/hrt	0.0 kips	23.4 kips
14.7.6.3.3	compressive deflection		
	see 14.7.5.3.6		
	dead load compr stress	0.82 ksi	0.82 ksi
14.7.6.3.3-1	dead load compr strain	3.27 %	3.27 %
	dead load compr displacement	0.06 "	0.06 "
	live load compr stress	0.37 ksi	0.37 ksi
14.7.6.3.3-1	live load compr strain	1.48 %	1.48 %
	live load compr displacement	0.03 "	0.03 "
	total load compr displacement	0.09 in	0.09 in
	allowable compr displacement =		
	0.09*hri*n total	0.16 in	0.16 in
	check displ < allowed	OK	OK
14.7.6.3.7	reinforcement		
	see 14.7.5.3.5		
14.7.5.3.5-1	service limit		
	sigma-s	1.19 ksi	1.19 ksi
	hs, reinforcement thickness >	0.0594 in.	0.0594 in.
	hs min.	0.0625 in.	0.0625 in.
	hs USE	0.125 in.	0.125 in.
	check hs	OK	OK
	fatigue limit		
	sigma-L	0.370 ksi	0.370 ksi
	hs, reinforcement thickness >	0.0185 in.	0.0185 in.
	hs min.	0.0625 in.	0.0625 in.
	hs USE	0.125 in.	0.125 in.
	check hs	OK	OK
	abutment slot length:		
	temp movement		0.65 in
	abutment tilt height		36.4 ft
	1/4" per 10' tilt		0.91 in
	hole diameter		2.25 in
	total slot length		4.5 in
	anchor rod:		
	total dead load	265 k	265 k
	25% dead load	66.25 k	66.25 k
	number of rods	2 ea	2 ea
	seismic load per rod	33.1 k	33.1 k
	rod dia	1.5 in	1.5 in
	rod Fy	55 ksi	55 ksi
	rod shear phi (can be 1.0 for seismic)	0.75	0.75
	metal shear resistance	42.3 k	42.3 k
	wind area	768 sq ft	948 sq ft
	wind pressure	75 psf	75 psf
	number bearings	4 ea	4 ea
	factored wind load per bearing	20.2 k	24.9 k
	factored wind load per rod	10.1 k	12.4 k
	conc strength	4000 psi	4000 psi
	conc shear phi	0.75	0.75
	rod embedment depth	18 in	18 in
	conc tension factored breakout resist x phi ACI App D, D-7	61.6 k	61.6 k

L. SUPERSTRUCTURE LOAD RATING

SUPERSTRUCTURE DESIGN CALCULATIONS FOR BRIDGE #17, RUTLAND, VT

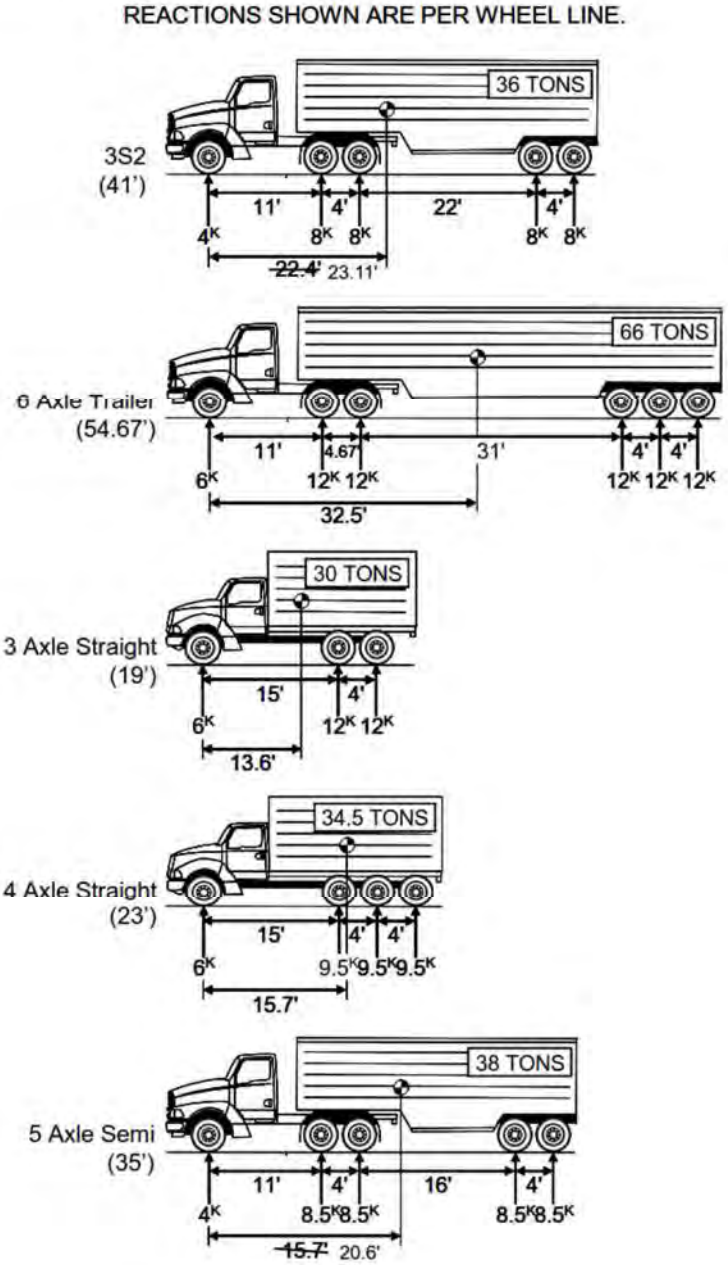

Figure 15.2-1 Vermont Standard Load Rating Trucks

15.2.1 Vehicular Live Loads

The Design Data block on the PI Sheet should contain the ratings for the H-20 and HL-93 vehicles as shown in Figure Section 15:-1 as well as for each of the vehicles shown in Figure Section 15:-2. The data block should only report the lowest or critical rating factor for each truck.

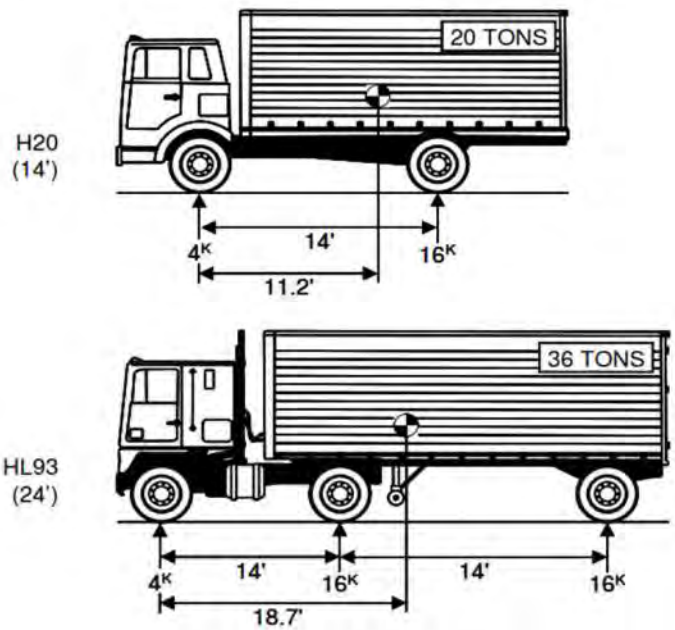

Figure 15.2.1-1 The AASHTO Standard Trucks

15.2.1.1 Rating in Tons

- See LRFR 6.4.4.4 "Rating in Tons"

BRIDGE #17 RUTLAND CITY
ROUTE TH 10 (RIPLEY ROAD) OVER OTTER CREEK
Rutland, Vermont

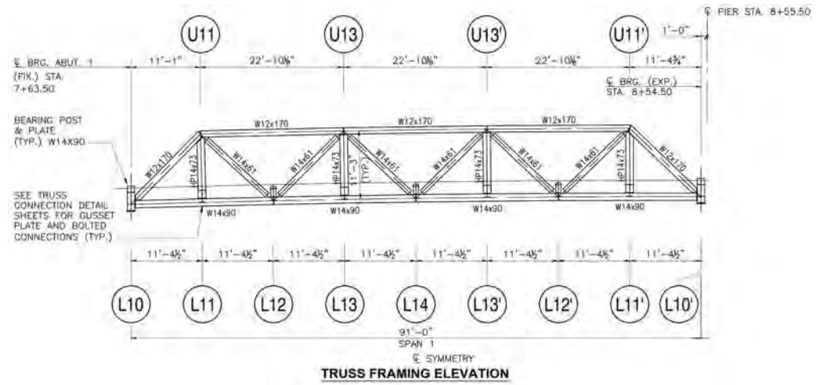

TRUSS FRAMING ELEVATION

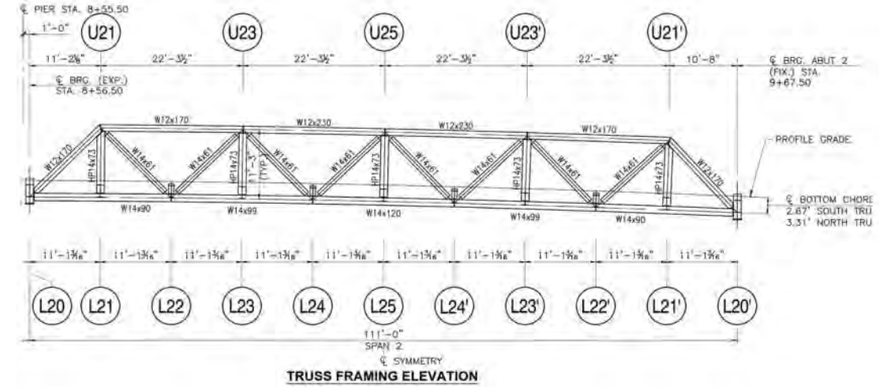

TRUSS FRAMING ELEVATION

MEMBER AND BOLTS LOAD RATINGS:

		span	1	1	1	1	1	1	1	1
		member	brg post	end post diag	top chord 1	top chord 2	diagonal	diagonal	bot chord 1	bot chord 2
		size	W14x90	W12x170	W12x170	W12x170	W14x61	W14x61	W14x90	W14x90
		force, compr tension	C	C	C	C	C	T	T	T
		MEMBER	L10	L10-U11	U11-U13	U13-U13'	L12-U13	U11-L12	L10-L12	L12-L14
	STRI	phi*Rn	-941.8	-1246.5	-1115.8	-1115.8	-446.0	724.5	747.9	991.0
	AXIAL Force	STRI CHECK		-645.50	-756.00	-986.75	-336.50	482.50	452.00	935.50
	AXIAL Force	SVCII CHECK		-491.30	-575.80	-751.90	-254.90	366.50	344.20	712.60
RATING	AXIAL Force	DC	-173.0	-221.0	-266.0	-354.0	-93.0	153.0	158.0	332.0
RATING	AXIAL Force	DW	-28.0	-35.0	-42.0	-56.0	-15.0	25.0	25.0	53.0
DESIGN	AXIAL Force	HL-93 M TRUCK	-101.0	-128.0	-152.0	-192.0	-48.0	86.0	92.0	185.0
DESIGN	AXIAL Force	HL-93 V TRUCK	-102.0	-136.0	-178.0	-297.0	-94.0	114.0	97.0	245.0
DESIGN	AXIAL Force	HL-93 LANE	-35.0	-45.0	-54.0	-71.0	-19.0	31.0	32.0	67.0
RATING=DESIGN*1.12/1.18	AXIAL Force	HL-93 M TRUCK	-95.9	-121.5	-144.3	-182.2	-45.6	81.6	87.3	175.6
RATING=DESIGN*1.12/1.18	AXIAL Force	HL-93 V TRUCK	-96.8	-129.1	-168.9	-281.9	-89.2	108.2	92.1	232.5
RATING=DESIGN*1.12/1.18	AXIAL Force	HL-93 LANE	-33.2	-42.7	-51.3	-67.4	-18.0	29.4	30.4	63.6
RATING	AXIAL Force	3S2 M		-91.00	-107.00	-133.00	-32.00	60.00	65.00	130.00
RATING	AXIAL Force	3S2 V	-80.50	-109.00	-142.00	-238.00	-76.00	91.00	78.00	195.00
RATING	AXIAL Force	6AXLE M		-154.00	-178.00	-202.00	-44.00	96.00	111.00	209.00
RATING	AXIAL Force	6AXLE V	-140.00	-187.00	-244.00	-403.00	-127.00	156.00	134.00	334.00
RATING	AXIAL Force	3AXLE M		-88.00	-105.00	-135.00	-35.00	60.00	63.00	129.00
RATING	AXIAL Force	3AXLE V	-78.00	-105.00	-139.00	-239.00	-78.00	90.00	75.00	194.00
RATING	AXIAL Force	4AXLE M		-99.00	-118.00	-152.00	-39.00	67.00	71.00	145.00
RATING	AXIAL Force	4AXLE V	-87.00	-118.00	-156.00	-267.00	-86.00	101.00	84.00	217.00
RATING	AXIAL Force	5AXLE M		-100.00	-119.00	-150.00	-37.00	67.00	72.00	145.00
RATING	AXIAL Force	5AXLE V	-89.00	-119.00	-156.00	-265.00	-85.00	101.00	85.00	216.00
RATING	AXIAL Force	H20 M		-60.00	-72.00	-94.00	-24.00	41.00	43.00	89.00
RATING	AXIAL Force	H20 V	-53.00	-72.00	-95.00	-165.00	-54.00	62.00	51.00	133.00
	Combo	member	brg post	end post diag	top chord 1	top chord 2	diagonal	diagonal	bot chord 1	bot chord 2 **RF MIN**
RF Rating Factors	STRI INV	HL-93	3.00	3.05	2.11	1.35	1.64	2.06	2.49	**1.19** **1.19**
RF Rating Factors	STRI OPER	HL-93	3.89	3.96	2.73	1.75	2.12	2.67	3.23	**1.54** **1.54**
RF Rating Factors	SVCII INV	HL-93	1.41	1.45	**1.07**	1.08	1.08	1.10	1.08	1.09 **1.07**
RF Rating Factors	SVCII OPER	HL-93	1.83	1.89	**1.39**	1.41	1.40	1.42	1.40	1.41 **1.39**
RF Rating Factors	STRI INV	H-20	7.37	7.28	5.72	3.58	3.25	4.57	6.82	**3.19** **3.19**
RF Rating Factors	STRI OPER	H-20	9.55	9.44	7.41	4.64	4.22	5.92	8.84	**4.13** **4.13**
RF Rating Factors	SVCII INV	H-20	3.45	3.47	2.91	2.87	**2.14**	2.43	2.96	2.92 **2.14**
RF Rating Factors	SVCII OPER	H-20	4.48	4.51	3.78	3.74	**2.78**	3.16	3.84	3.79 **2.78**
RF Rating Factors	STRI OPER	3S2	6.29	6.24	4.99	3.28	3.00	4.04	5.85	**2.83** **2.83**
RF Rating Factors	SVCII OPER	3S2	2.95	2.98	2.55	2.64	**1.97**	2.15	2.54	2.60 **1.97**
RF Rating Factors	STRI OPER	6AXLE	3.62	3.64	3.00	2.16	1.79	2.35	3.42	**1.76** **1.76**
RF Rating Factors	SVCII OPER	6AXLE	1.70	1.74	1.53	1.74	**1.18**	1.26	1.49	1.61 **1.18**
RF Rating Factors	STRI OPER	3AXLE	6.49	6.47	5.08	3.23	2.92	4.08	6.03	**2.85** **2.85**
RF Rating Factors	SVCII OPER	3AXLE	3.05	3.09	2.60	2.60	**1.92**	2.18	2.62	2.62 **1.92**
RF Rating Factors	STRI OPER	4AXLE	5.82	5.76	4.52	2.87	2.65	3.64	5.35	**2.54** **2.54**
RF Rating Factors	SVCII OPER	4AXLE	2.73	2.75	2.31	2.31	**1.74**	1.94	2.33	2.33 **1.74**
RF Rating Factors	STRI OPER	5AXLE	5.69	5.71	4.48	2.91	2.68	3.64	5.28	**2.54** **2.54**
RF Rating Factors	SVCII OPER	5AXLE		2.73	2.29	2.34	**1.76**	1.94	2.30	2.33 **1.76**

		span	2	2	2	2	2	2	2	2	2
		member	brg post	end post diag	top chord 1	top chord 2	diagonal	diagonal	bot chord 1	bot chord 2	bot chord 3
		size	W14x90	W12x170	W12x170	W12x230	W14x61	W14x61	W14x90	W14x99	W14x120
		force, compr tension	C	C	C	C	C	T	T	T	T
		MEMBER	L20	L20-U21	U21-U23	U23-U25	L22-U23	U21-L22	L20-L22	L22-L24	L24-L24'
	STRI	phi*Rn	-969.5	-1357.3	-1441.5	-2004.8	-549.2	724.5	886.4	1293.0	1569.7
	AXIAL Force	STRI CHECK	-593.25	-773.25	-939.00	-1390.25	-474.00	615.25	539.25	1223.25	1438.00
	AXIAL Force	SVCII CHECK	-453.10	-581.40	-717.30	-1062.40	-312.70	439.30	411.90	934.70	1099.10
RATING	AXIAL Force	DC	-228.00	-294.0	-363.0	-543.0	-160.0	223.0	208.0	476.0	565.0
RATING	AXIAL Force	DW	-34.00	-43.0	-54.0	-80.0	-24.0	33.0	31.0	70.0	83.0
DESIGN	AXIAL Force	HL-93 M TRUCK	-104.00	-133.00	-163.00	-237.00	-69.00	99.00	94.00	211.00	242.00
DESIGN	AXIAL Force	HL-93 V TRUCK	-104.00	-140.0	-183.0	-321.0	-106.0	122.0	98.0	258.0	373.0
DESIGN	AXIAL Force	HL-93 LANE	-43.00	-55.0	-68.0	-101.0	-30.0	42.0	39.0	88.0	105.0
RATING=DESIGN*1.12/1.18	AXIAL Force	HL-93 M TRUCK	-98.7	-126.2	-154.7	-224.9	-65.5	94.0	89.2	200.3	229.7
RATING=DESIGN*1.12/1.18	AXIAL Force	HL-93 V TRUCK	-98.7	-132.9	-173.7	-304.7	-100.6	115.8	93.0	244.9	354.0
RATING=DESIGN*1.12/1.18	AXIAL Force	HL-93 LANE	-40.8	-52.2	-64.5	-95.9	-28.5	39.9	37.0	83.5	99.7
RATING	AXIAL Force	3S2 M		-114.00	-140.00	-201.00	-58.00	84.00	81.00	180.00	204.00
RATING	AXIAL Force	3S2 V	-91.00	-121.00	-158.00	-272.00	-89.00	104.00	85.00	220.00	313.00
RATING	AXIAL Force	6AXLE M		-199.00	-239.00	-333.00	-92.00	142.00	140.00	304.00	326.00
RATING	AXIAL Force	6AXLE V	-158.00	-210.00	-273.00	-467.00	-152.00	180.00	148.00	380.00	535.00
RATING	AXIAL Force	3AXLE M		-109.00	-134.00	-198.00	-58.00	82.00	77.00	175.00	204.00
RATING	AXIAL Force	3AXLE V	-86.00	-115.00	-152.00	-267.00	-89.00	101.00	81.00	214.00	311.00
RATING	AXIAL Force	4AXLE M		-123.00	-152.00	-223.00	-65.00	93.00	87.00	197.00	229.00
RATING	AXIAL Force	4AXLE V	-97.00	-130.00	-171.00	-300.00	-99.00	114.00	91.00	240.00	349.00
RATING	AXIAL Force	5AXLE M		-125.00	-154.00	-224.00	-65.00	93.00	89.00	199.00	228.00
RATING	AXIAL Force	5AXLE V	-99.00	-132.00	-173.00	-301.00	-99.00	115.00	93.00	243.00	348.00
RATING	AXIAL Force	H20 M		-75.00	-92.00	-136.00	-40.00	56.00	53.00	120.00	140.00
RATING	AXIAL Force	H20 V	-59.00	-79.00	-104.00	-184.00	-61.00	70.00	56.00	147.00	214.00
	Combo	member	brg post	end post diag	top chord 1	top chord 2	diagonal	diagonal	bot chord 1	bot chord 2	bot chord 3 **RF MIN**
RF Rating Factors	STRI INV	HL-93	2.59	2.86	2.36	2.15	1.39	1.45	2.62	**1.19**	1.28 **1.19**
RF Rating Factors	STRI OPER	HL-93	3.36	3.70	3.06	2.78	1.80	1.89	3.40	**1.55**	1.66 **1.55**
RF Rating Factors	SVCII INV	HL-93	1.04	1.23	1.07	1.07	1.06	**1.03**	1.06	1.07	1.05 **1.03**
RF Rating Factors	SVCII OPER	HL-93	1.36	1.59	1.39	1.40	1.37	**1.34**	1.38	1.39	1.36 **1.34**
RF Rating Factors	STRI INV	H-20	6.14	6.69	5.63	5.07	2.93	3.23	6.25	**2.82**	3.02 **2.82**
RF Rating Factors	STRI OPER	H-20	7.95	8.68	7.30	6.57	3.80	4.19	8.10	**3.66**	3.91 **3.66**
RF Rating Factors	SVCII INV	H-20	2.47	2.87	2.55	2.53	**2.23**	2.29	2.52	2.54	2.46 **2.23**
RF Rating Factors	SVCII OPER	H-20	3.21	3.74	3.32	3.29	**2.90**	2.98	3.28	3.30	3.20 **2.90**
RF Rating Factors	STRI OPER	3S2	5.16	5.66	4.80	4.44	2.61	2.82	5.30	**2.44**	2.68 **2.44**
RF Rating Factors	SVCII OPER	3S2	2.08	2.44	2.18	2.23	**1.99**	2.00	2.15	2.20	2.20 **1.99**
RF Rating Factors	STRI OPER	6AXLE	2.97	3.26	2.81	2.68	1.53	1.63	3.07	**1.45**	1.68 **1.45**
RF Rating Factors	SVCII OPER	6AXLE	1.20	1.41	1.28	1.34	1.17	**1.16**	1.24	1.30	1.38 **1.16**
RF Rating Factors	STRI OPER	3AXLE	5.46	5.96	5.01	4.51	2.61	2.91	5.58	**2.51**	2.68 **2.51**
RF Rating Factors	SVCII OPER	3AXLE	2.20	2.57	2.28	2.26	**1.99**	2.06	2.26	2.26	2.20 **1.99**
RF Rating Factors	STRI OPER	4AXLE	4.84	5.27	4.42	4.01	2.34	2.57	4.94	**2.23**	2.39 **2.23**
RF Rating Factors	SVCII OPER	4AXLE	1.95	2.27	2.01	2.01	**1.79**	1.83	2.00	2.01	1.96 **1.79**
RF Rating Factors	STRI OPER	5AXLE	4.74	5.19	4.36	3.99	2.34	2.55	4.83	**2.21**	2.40 **2.21**
RF Rating Factors	SVCII OPER	5AXLE	1.91	2.24	1.98	2.00	**1.79**	1.81	1.95	1.99	1.97 **1.79**

"M" moment controls chord forces
"V" shear controls diagonal forces

GUSSET PLATE DESIGN: L14 RATING

Units: kip, inch

Diagram and Design forces:

DC	31.0	
DW	7.0	
HL-93 M	8.5	
HL-93 L	6.6	
STRI	75.8	K
STRI DES	602.0	K
DC	332.0	
DW	53.0	
HL-93 M	175.6	
HL-93 L	63.6	
STRI	913.1	K
STRI DES	962.0	K

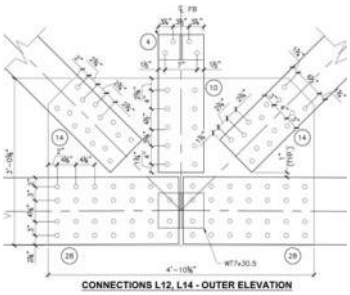

DC	31.0	
DW	7.0	
HL-93 M	8.5	
HL-93 L	6.6	
STRI	75.8	K
STRI DES	-390.0	K
DC	332.0	
DW	53.0	
HL-93 M	175.6	
HL-93 L	63.6	
STRI	913.1	K
STRI DES	962.0	K

JOINT	**L14**
gusset thickness	**1.25**
vertical dimension	**36.4**
gusset length	**58.0**
hole diameter	**1.00**
Fy	**50.0**
Fu	**65.0**
gusset weight	0.75

6.14.2.8 Gusset plates

6.7.3 minimum plate thickness 3/8"

6.14.2.8.7 edge slenderness

Lmax unsupported 62.0 **OK** OK

6.13.1 minimum connection design forces

See force summary for forces and bolt requirements

6.13.2 bolt detailing requirements

See bolt detailing information

6.13.6.1.5 must reduce bolt strength resistance if fillers > 0.25" thickness

slip critical resistance needs no reduction

most bolt numbers are determined by slip critical resistance

Design forces:

Left side

Chord connection design force	913.1	tension
Diagonal connection design force	75.8	tension
diagonal angle off horizontal	**45.0**	
Pu two gussets splice	966.69	horz components
Pu one gusset splice	483.3	
Vu vertical two gussets shear	53.6	
Vu vertical one gusset shear	26.8	
Vu horizontal two gussets shear	0.0	
Vu horizontal one gusset shear	0.0	

Right side

Chord connection design force	913.1	tension
Diagonal connection design force	75.8	ignore compression for Pu
diagonal angle off horizontal	**45.0**	
Pu two gussets splice	966.69	horz components
Pu one gusset splice	483.3	
Vu vertical two gussets shear	53.6	
Vu vertical one gusset shear	26.8	

Strength check of failure modes:

L14

6.14.2.8.3 shear on gusset plates
6.14.2.8.3-1 shear yielding
6.13.5.3-2 shear rupture
6.14.2.8.3-1 shear yielding partial planes compr members only

6.14.2.8.3-1 shear yielding on gross section, one gusset

omega	0.88		
phi cy	0.80		
gusset depth	36.38		
gusset length	58.00		
gusset thickness	1.25		
Fy	50.00		
Vertical shear:			
Avg v	45.47		
Vr v	928.3		
Vu v	26.8		
Vr>Vu?	**OK**	0.03	Load/Resistance
Horizontal shear:			
Avg h	72.50		
Vr h	1480.2		
Vu h	0.0		
Vr>Vu?	**OK**	0.00	

6.13.5.3-2 shear rupture on net section, one gusset

number of holes in vertical shear plane		**9**
number of holes in horizontal shear plane		**14**
Fu	65.00	
Vertical shear:		
Avn v	34.22	
Vr v	1032.0	
Vu v	26.8	
Vr>Vu?	**OK**	0.03
Horizontal shear:		
Avn h	55.00	
Vr h	1658.8	
Vu h	0.0	
Vr>Vu?	**OK**	0.00

6.14.2.8.3-1 shear yielding partial planes compression members only

diagonal member compression	0.0		
diagonal angle off horizontal	45.0		
gusset thickness	1.25		
phi cy	0.80		
omega	0.88		
Fy	50.0		
Horizontal shear:			
horizontal shear length	**22.6**		
Vr h	577.4		
horizontal shear force	0.0	two gussets	
horizontal shear force, Vu h	0.0	one gusset	
Vr>Vu?	**OK**	0.00	
Vertical shear:			
vertical shear length	**22.0**		
Vr h	561.4		
vertical shear force	0.0	two gussets	
vertical shear force, Vu v	0.0	one gusset	
Vr>Vu?	**OK**	0.00	

6.14.2.8.4 compressive resistance on gusset whitmore section
compression diagonal

L14

Lmid	**9.0**	
bolt pattern length	**16.5**	
bolt pattern width	**6.5**	
diagonal member compresion Pu =	0.0	two gussets
phi cg	0.75	
tg	1.25	
Width of Whitmore section	25.5	
Ag	31.9	
Lmid/tg	7.2	

$Pr/Ag = -4.93E-07x^4 + 0.000159x^3 - 0.0153x^2 + 0.1119x + 37.179$

Pr/Ag =	37.2	
Pr = phi Pn =	1189.2	
Pu	0.0	one gusset
Pr>Pu?	**OK**	0.00

6.14.2.8.5 tensile resistance of gusset
6.8.2.1-1 yielding on Ag whitmore
6.8.2.1-2 fracture on U*An<0.85Ag whitmore
6.13.5.2 block shear rupture
6.13.4 block shear rupture
6.13.4-1 block shear rupture

6.8.2.1-1 yielding on Ag whitmore
6.8.2.1-2 fracture on U*An<0.85Ag whitmore

Tension diagonal, forces on Whitmore section:

bolt pattern length	**16.5**	
bolt pattern width	**6.5**	
number of widthwise holes	**2.0**	
diameter of holes	**1**	
member tension Pu =	75.8	two gussets
member tension Pu =	37.9	one gusset
phi y	0.95	
phi u	0.80	
Fy	50.00	
Fu	65.00	
tg	1.25	
Width of Whitmore section	25.5	
Ag	31.9	
An	29.4	
0.85*Ag	27.1	
phi y * Pny yielding	1516.5	one gusset 6.8.2.1-1
phi u * Pnu fracture	1411.1	one gusset 6.8.2.1-2
Pu	37.9	
Pr>Pu?	**OK**	0.03

6.13.5.2 block shear rupture
6.13.4 block shear rupture
6.13.4-1 block shear rupture

phi bs	0.80
Fy	50.00
Fu	65.00
tg	1.25

at tension diagonal: 6.13.4-1

bolt hole dia	**1.0**	
shear holes	**7.0**	
shear sides	**2**	
tension width	**6.5**	
tension holes	**2**	
shear length	**15.5**	
member tension Pu =	75.8	two gussets
member tension Pu =	37.9	one gusset
Avn	21.25	
Atn	6.88	
Avg	38.75	
Rr1	998.4	on net
Rr2	1256.5	on gross
Rr use	998.4	min
Pu	37.9	
Rr>Pu?	**OK**	0.04

L14

at left tension chord: 6.13.4-1

bolt hole dia	**1.0**	
shear length	**26.8**	
shear holes	**7**	
shear sides	**1**	
tension width	**11.0**	
tension holes	**4**	
member tension Pu =	913.1	two gussets
member tension Pu =	456.5	one gusset
Avn	24.69	
Atn	10.00	
Avg	33.44	
Rr1	1264.6	gross
Rr2	1295.8	net
Rr use	1264.6	min
Pu	456.5	
Rr>Pu?	**OK**	0.36

at right tension chord: 6.13.4-1

bolt hole dia	**1.0**	
shear length	**26.8**	
shear holes	**7**	
shear sides	**1**	
tension width	**11.0**	
tension holes	**4**	
member tension Pu =	913.1	two gussets
member tension Pu =	456.5	one gusset
Avn	24.69	
Atn	10.00	
Avg	33.44	
Rr1	1264.6	gross
Rr2	1295.8	net
Rr use	1264.6	min
Pu	456.5	
Rr>Pu?	**OK**	0.36

6.14.2.8.6 CHORD SPLICES

JOINT L14

Pu one gusset USE 483.3

phi cs	0.65	OPTION:
Fy	50.00	no web plates
Fu	65.00	no flange plates
hole diameter	1.00	USE TO AVOID THE ADDED GALVANIZING, LABOR, AND PIECES

	x dim	ydim	y from bot	Ag	Ay	Ayy	Io	holes	pitch	Aholes	Iholes	Ae	Ay	Ayy	Io
gusset plate	1.250	36.38	18.19	45.5	827.0	15040.4	5013.5	**9**	4.04	-11.25	-1225.1	34.2	622.4	11319.1	3788.3
flange plate 1	**0.00**	**0.00**	14.50	0.0	0.0	0.0	0.0	**1**		0.00		0.0	0.0	0.0	
flange plate 2	**0.00**	**0.00**	0.00	0.0	0.0	0.0	0.0	**1**		0.00		0.0	0.0	0.0	
web plate 1	**0.00**	**0.00**	7.50	0.0	0.0	0.0	0.0	**1**		0.00		0.0	0.0	0.0	
web plate 2	**0.00**	**0.00**	7.00	0.0	0.0	0.0	0.0	**1**		0.00		0.0	0.0	0.0	
W section flange		**14.50**													
W section web		**0.50**													
				45.5	827.0	15040.4	5013.5					34.2	622.4	11319.1	3788.3

Ag	45.5		An	34.2	
ybar	18.2		ybar	18.2	
e Wsection	10.9		e Wsection	10.9	
Ig	5013.5		In	3788.3	
Sgbot	275.7		Snbot	208.3	
Pu/A	10.6		Pu/A	14.1	
Pu*e/Sbot	19.2		Pu*e/Sbot	25.4	
sum	29.8	ksi demand	sum	39.5	ksi demand
phics*Fy	32.5	ksi on gross section	phics*Fu	42.3	ksi on net section
sum <? Phics*Fy	**OK**	0.92 Load/Resistance	sum <? Phics*Fu	**OK**	0.94 Load/Resistance

RATING FACTORS: L14

phi*Pn two gusset splice 1033.8

Pu two gusset splice

	diagonal LT	chord RT	P LT	diagonal RT	chord RT	P RT	P	STRI RF INV	STRI RF OPER
DC	31.0	332.0	353.9	31.0	332.0	353.9	353.9		
DW	7.0	53.0	57.9	7.0	53.0	57.9	57.9		
HL-93 M	8.5	175.6	181.6	8.5	175.6	181.6	181.6		
HL-93 L	6.6	63.6	68.3	6.6	63.6	68.3	68.3		
HL-93 M+L	15.2	239.2	249.9	15.2	239.2	249.9	249.9	1.15	1.50
H-20 M	7.00	89.00	93.9	7.00	89.00	93.9	93.9	3.07	3.98
3S2 M	4.00	130.00	132.8	4.00	130.00	132.8	132.8	2.17	2.81
6AXLEM	10.00	209.00	216.1	10.00	209.00	216.1	216.1	1.33	1.73
3AXLE M	9.00	129.00	135.4	9.00	129.00	135.4	135.4	2.13	2.76
4AXLE M	10.00	146.00	153.1	10.00	146.00	153.1	153.1	1.88	2.44
5AXLEM	7.00	145.00	149.9	7.00	145.00	149.9	149.9	1.92	2.49

GUSSET PLATE DESIGN: L24 RATING
Units: kip, inch

Diagram and forces:

DC	46.00	
DW	14.00	
HL-93 M	36.07	
HL-93 L	17.08	
STRI	171.5	K
STRI DES	669.0	K
DC	476.0	
DW	70.0	
HL-93 M	200.3	
HL-93 L	83.5	
STRI	1196.6	K
STRI DES	1257.0	K

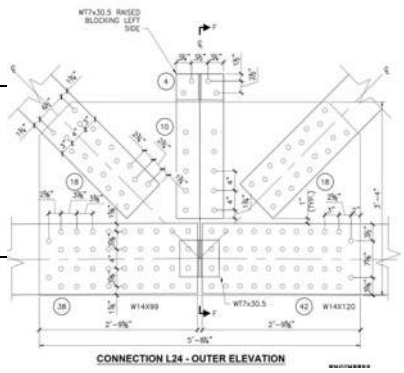

DC	-32.00	
DW	-5.00	
HL-93 M	-6.64	
HL-93 L	-5.69	
STRI	-69.1	K
STRI DES	-510.6	K
DC	565.0	
DW	83.0	
HL-93 M	229.7	
HL-93 L	99.7	
STRI	1407.1	K
STRI DES	1503.3	K

JOINT	**L24**
gusset thickness	**1.75**
vertical dimension	**40.0**
gusset length	**68.0**
hole diameter	**1.00**
Fy	**50.0**
Fu	**65.0**
gusset weight	1.35

6.14.2.8 Gusset plates
- 6.7.3 minimum plate thickness 3/8"
- 6.14.2.8.7 edge slenderness
  - Lmax unsupported 86.8 **OK**
- 6.13.1 minimum connection design forces
  - See force summary for forces and bolt requirements
- 6.13.2 bolt detailing requirements
  - See bolt detailing information
- 6.13.6.1.5 must reduce bolt strength resistance if fillers > 0.25" thickness
  - slip critical resistance needs no reduction
  - most bolt numbers are determined by slip critical resistance

Design forces:

Left side		
STRI		
Chord connection design force	1196.6	tension
Diagonal connection design force	171.5	tension
diagonal angle off horizontal	**45.0**	
Pu two gussets splice	1317.92	horz components
Pu one gusset splice	659.0	
Vu vertical two gussets shear	121.3	
Vu vertical one gusset shear	60.6	
Vu horizontal two gussets shear	170.1	
Vu horizontal one gusset shear	85.1	
FATGI		
Chord force	0.0	tension
Diagonal force	0.0	tension
Tu two gussets splice	0.00	
Tu one gusset splice	0.0	

Right side		
STRI		
Chord connection design force	1407.1	tension
Diagonal connection design force	-69.1	ignore compression for Pu
diagonal angle off horizontal	**45.0**	
Pu two gussets splice	1407.12	horz components
Pu one gusset splice	703.6	
Vu vertical two gussets shear	48.9	
Vu vertical one gusset shear	24.4	
FATGI		
Chord force	0.0	tension
Diagonal force	0.0	ignore compression
Tu two gussets splice	0.00	
Tu one gusset splice	0.0	

Strength check of failure modes:

L24

6.14.2.8.3 shear on gusset plates
6.14.2.8.3-1 shear yielding
6.13.5.3-2 shear rupture
6.14.2.8.3-1 shear yielding partial planes compr members only

6.14.2.8.3-1 shear yielding on gross section, one gusset

omega	0.88		
phi cy	0.80		
gusset depth	40.00		
gusset length	68.00		
gusset thickness	1.75		
Fy	50.00		
Vertical shear:			
Avg v	70.00		
Vr v	1429.1		
Vu v	60.6		
Vr>Vu?	**OK**	0.04	Load/Resistance
Horizontal shear:			
Avg h	119.00		
Vr h	2429.5		
Vu h	85.1		
Vr>Vu?	**OK**	0.04	

6.13.5.3-2 shear rupture on net section, one gusset

number of holes in vertical shear plane		**9**
number of holes in horizontal shear plane		**21**
Fu	65.00	
Vertical shear:		
Avn v	54.25	
Vr v	1636.2	
Vu v	60.6	
Vr>Vu?	**OK**	0.04
Horizontal shear:		
Avn h	82.25	
Vr h	2480.7	
Vu h	85.1	
Vr>Vu?	**OK**	0.03

6.14.2.8.3-1 shear yielding partial planes compression members only

diagonal member compression	-69.1		
diagonal angle off horizontal	45.0		
gusset thickness	1.75		
phi cy	0.80		
omega	0.88		
Fy	50.0		
Horizontal shear:			
horizontal shear length	**26.0**		
Vr h	928.9		
horizontal shear force	48.9	two gussets	
horizontal shear force, Vu h	24.4	one gusset	
Vr>Vu?	**OK**		0.03
Vertical shear:			
vertical shear length	**26.0**		
Vr h	928.9		
vertical shear force	48.9	two gussets	
vertical shear force, Vu v	24.4	one gusset	
Vr>Vu?	**OK**		0.03

6.14.2.8.4 compressive resistance on gusset whitmore section
compression diagonal

L24

Lmid	**9.0**	
bolt pattern length	**22.0**	
bolt pattern width	**6.5**	
diagonal member compresion Pu =	-69.1	two gussets
phi cg	0.75	
tg	1.75	
Width of Whitmore section	31.9	
Ag	55.8	
Lmid/tg	5.1	

$Pr/Ag = -4.93E\text{-}07x^4 + 0.000159x^3 - 0.0153x^2 + 0.1119x + 37.179$

Pr/Ag =	37.4	
Pr = phi Pn =	2085.5	
Pu	34.5	one gusset
Pr>Pu?	**OK**	0.02

6.14.2.8.5 tensile resistance of gusset
6.8.2.1-1 yielding on Ag whitmore
6.8.2.1-2 fracture on U*An<0.85Ag whitmore
6.13.5.2 block shear rupture
6.13.4 block shear rupture
6.13.4-1 block shear rupture

6.8.2.1-1 yielding on Ag whitmore
6.8.2.1-2 fracture on U*An<0.85Ag whitmore

Tension diagonal, forces on Whitmore section:

bolt pattern length	**22.0**	
bolt pattern width	**6.5**	
number of widthwise holes	**2.0**	
diameter of holes	**1**	
member tension Pu =	171.5	two gussets
member tension Pu =	85.8	one gusset
phi y	0.95	
phi u	0.80	
Fy	50.00	
Fu	65.00	
tg	1.75	
Width of Whitmore section	31.9	
Ag	55.8	
An	52.3	
0.85*Ag	47.4	
phi y * Pny yielding	2650.7	one gusset 6.8.2.1-1
phi u * Pnu fracture	2466.5	one gusset 6.8.2.1-2
Pu	85.8	
Pr>Pu?	**OK**	0.03

6.13.5.2 block shear rupture
6.13.4 block shear rupture
6.13.4-1 block shear rupture

phi bs	0.80
Fy	50.00
Fu	65.00
tg	1.75

at tension diagonal: 6.13.4-1

bolt hole dia	**1.0**	
shear holes	**9.0**	
shear sides	**2**	
tension width	**6.5**	
tension holes	**2**	
shear length	**20.0**	
member tension Pu =	171.5	two gussets
member tension Pu =	85.8	one gusset
Avn	38.50	
Atn	9.63	
Avg	70.00	
Rr1	1661.7	on net
Rr2	2124.5	on gross
Rr use	1661.7	min
Pu	85.8	
Rr>Pu?	**OK**	0.05

at left tension chord: 6.13.4-1

L24

bolt hole dia	**1.0**	
shear length	**31.0**	
shear holes	**10**	
shear sides	**1**	
tension width	**11.0**	
tension holes	**4**	
member tension Pu =	1196.6	two gussets
member tension Pu =	598.3	one gusset
Avn	36.75	
Atn	14.00	
Avg	54.25	
Rr1	1836.4	gross
Rr2	1986.6	net
Rr use	1836.4	min
Pu	598.3	
Rr>Pu?	**OK**	0.33

at right tension chord: 6.13.4-1

bolt hole dia	**1.0**	
shear length	**31.0**	
shear holes	**11**	
shear sides	**1**	
tension width	**11.0**	
tension holes	**4**	
member tension Pu =	1407.1	two gussets
member tension Pu =	703.6	one gusset
Avn	35.00	
Atn	14.00	
Avg	54.25	
Rr1	1783.6	gross
Rr2	1986.6	net
Rr use	1783.6	min
Pu	703.6	
Rr>Pu?	**OK**	0.39

6.14.2.8.6 CHORD SPLICES

JOINT L24

STRI Pu one gusset USE	659.0	
FATGI Tu one gusset USE	0.0	
phi cs	0.65	OPTION:
Fy	50.00	no web plates
Fu	65.00	no flange plates
hole diameter	1.00	USE TO AVOID THE ADDED GALVANIZING, LABOR, AND PIECES

	x dim	ydim	y from bot	Ag	Ay	Ayy	Io	holes	pitch	Aholes	Iholes	Ae	Ay	Ayy	Io
gusset plate	1.75	40.00	20.00	70.0	1400.0	28000.0	9333.3	**9**	4.44	-15.75	-2074.1	54.3	1085.0	21700.0	7259.3
flange plate 1	**0.00**	**0.00**	14.50	0.0	0.0	0.0	0.0	**1**		0.00		0.0	0.0	0.0	
flange plate 2	**0.00**	**0.00**	0.00	0.0	0.0	0.0	0.0	**1**		0.00		0.0	0.0	0.0	
web plate 1	**0.00**	**0.00**	7.50	0.0	0.0	0.0	0.0	**1**		0.00		0.0	0.0	0.0	
web plate 2	**0.00**	**0.00**	7.00	0.0	0.0	0.0	0.0	**1**		0.00		0.0	0.0	0.0	
W section flange		**14.50**													
W section web		**0.50**													
				70.0	1400.0	28000.0	9333.3					54.3	1085.0	21700.0	7259.3

Ag	70.0	
ybar	20.0	
e Wsection	12.8	
Ig	9333.3	
Sgbot	466.7	
Pu/A	9.4	
Pu*e/Sbot	18.0	
STRI sum	27.4	ksi demand
phics*Fy	32.5	ksi on gross section
STRI sum <? Phics*Fy	**OK**	0.84
Tu/A	0.00	
Tu*e/Sbot	0.00	
FATGI sum=delta Fn	0.0	ksi demand
delta Fth	16.0	ksi on net section Category B 6.6.1.2.5
delta Fn < delta Fth?	**OK**	0.00

An	54.3	
ybar	20.0	
e Wsection	12.8	
In	7259.3	
Snbot	363.0	
Pu/A	12.1	
Pu*e/Sbot	23.1	
sum	35.3	ksi demand
phics*Fu	42.3	ksi on net section
sum <? Phics*Fu	**OK**	0.84

RATING FACTORS:

L24

phi*Pn two gusset splice 1562.2

Pu two gusset splice

	diagonal LT	chord RT	P LT	diagonal RT	chord RT	P RT	P	STRI RF INV	STRI RF OPER
DC	46.0	476.0	508.5	-32.0	565.0	565.0	508.5		
DW	14.0	70.0	79.9	-5.0	83.0	83.0	79.9		
HL-93 M	36.1	200.3	225.8	-6.6	229.7	229.7	225.8		
HL-93 L	17.1	83.5	95.6	-5.7	99.7	99.7	95.6		
HL-93 M+L	53.2	283.8	321.4	-12.3	329.4	329.4	321.4	1.43	1.86
H-20 M	23.00	120.00	136.3	-7.00	140.00	140.0	136.3	3.38	4.39
3S2 M	31.00	180.00	201.9	-4.00	204.00	204.0	201.9	2.28	2.96
6AXLEM	37.00	304.00	330.2	10.00	326.00	333.1	330.2	1.40	1.81
3AXLE M	18.00	175.00	187.7	-9.00	204.00	204.0	187.7	2.46	3.18
4AXLE M	20.00	197.00	211.1	-9.00	229.00	229.0	211.1	2.18	2.83
5AXLEM	36.00	199.00	224.5	-7.00	228.00	228.0	224.5	2.05	2.66

LIVE LOAD and DYNAMIC LOAD, L+I

Rutland VT

Span: 91 ft
C.G. to Midspan - or +? + (user toggle for max w)

Vehicle: **3S2**

Axle	Load, P, k	Spa, ft	Dist, XA, ft	P*X	Dist, XB, ft	R left, k	M at max pt
1	8		0	0	26.44	5.68	115.2
2	16	11	11	176	37.44	9.42	326.3
3	16	4	15	240	41.44	8.71	361.1
4	16	22	37	592	63.44	4.84	200.8
5	16	4	41	656	67.44	4.14	171.6
6	0	0	41	0	67.44	0.00	0.0
	72			1664		32.8	1175.0

truck length	41	ft
C.G. Dist	23.11	ft
C.G. Offset Dist	8.11	ft
C.G. to Midspan	4.06	ft
X to max moment Pt	41.44	ft
X/L or 1-X/L	0.46	

Loads for Moment Envelope due to Axle Loads:

equivalent distr load, w axles	1.379	k/ft for Moment per lane
correction midspan load, P axles	-11.61	k for Moment per lane
axle Max moment at X	1175.0	ft k per lane
axle moment Distribution factor	1.120	lanes
axle Impact	0.33	
w Axle (L+I)*Distr for Moment	**2.05**	**k/ft for Moment**
correction midspan load, P axles (L+I)*Distr	**-17.3**	**k for Moment (negative is up)**
axle Max moment (L+I)*Distr at X	**1750.3**	**ft k**

Loads for Shear Envelope due to Axle Loads:

axle Max end shear, Vr	57.8	k for Shear per lane
or		
w Axle (L+I)*Distr for Shear	**1.18**	**k/ft for Shear**
P midspan Axle (L+I)*Distr for Shear	**65.1**	**k at midspan for Shear**

Load for Moment and Shear due to Lane Load:

w lane	0.00	k/ft/lane
lane Distribution factor	1.120	
lane Impact	0.00	
wLane (L+I)*Distr	**0.00**	**k/ft for Moment and Shear**

Compare computed Axle Moments and Shears for equivalent loads to actuals (per lane, without Impact):

Span	X	M equ LL	V equ LL	M LL actual	V LL actual	Moment diff	Shear diff	w equ for M
1	0.00	0.0	57.8	0.0	57.8	0.0%	0.0%	1.280
1	9.10	460.9	50.6	460.9	50.6	0.0%	0.0%	1.237
1	18.20	807.6	43.4	790.7	43.4	-2.1%	0.0%	1.194
1	27.30	1040.2	36.2	1026.3	36.2	-1.3%	0.0%	1.180
1	36.40	1158.6	29.0	1154.9	29.0	-0.3%	0.0%	1.162
1	45.50	1162.8	-21.8	1162.0	21.8	-0.1%	0.0%	1.123
1	54.60	1158.6	-29.0	1154.9	-29.0	-0.3%	0.0%	1.162
1	63.70	1040.2	-36.2	1026.3	-36.2	-1.3%	0.0%	1.180
1	72.80	807.6	-43.4	790.7	-43.4	-2.1%	0.0%	1.194
1	81.90	460.9	-50.6	460.9	-50.6	0.0%	0.0%	1.237
1	91.00	0.0	-57.8	0.0	-57.8	0.0%	0.0%	1.280

LIVE LOAD and DYNAMIC LOAD, L+I

Rutland VT

Span: 91 ft
C.G. to Midspan - or +? - (user toggle for max w)

Vehicle: **6 Axle Trailer**

Axle	Load, P, k	Spa, ft	Dist, XA, ft	P*X	Dist, XB, ft	R left, k	M at max pt
1	12		0	0	5.92	11.22	30.0
2	24	11	11	264	16.92	19.54	171.4
3	24	4.67	15.67	376.08	21.59	18.31	218.7
4	24	31	46.67	1120.08	52.59	10.13	532.7
5	24	4	50.67	1216.08	56.59	9.07	477.3
6	24	4	54.67	1312.08	60.59	8.02	421.8
	132			4288.32		76.3	1851.9

truck length	54.67	ft
C.G. Dist	32.49	ft
C.G. Offset Dist	14.18	ft
C.G. to Midspan	-7.09	ft
X to max moment Pt	52.59	ft
X/L or 1-X/L	0.42	

Loads for Moment Envelope due to Axle Loads:

equivalent distr load, w axles	2.621	k/ft for Moment per lane
correction midspan load, P axles	-41.41	k for Moment per lane
axle Max moment at X	1851.9	ft k per lane
axle moment Distribution factor	1.120	lanes
axle Impact	0.33	
w Axle (L+I)*Distr for Moment	**3.90**	**k/ft for Moment**
correction midspan load, P axles (L+I)*Distr	**-61.7**	**k for Moment (negative is up)**
axle Max moment (L+I)*Distr at X	**2758.6**	**ft k**

Loads for Shear Envelope due to Axle Loads:

axle Max end shear, Vr	99.8	k for Shear per lane
or		
w Axle (L+I)*Distr for Shear	**2.16**	**k/ft for Shear**
P midspan Axle (L+I)*Distr for Shear	**100.8**	**k at midspan for Shear**

Load for Moment and Shear due to Lane Load:

w lane	0.00	k/ft/lane
lane Distribution factor	1.120	
lane Impact	0.00	
wLane (L+I)*Distr	**0.00**	**k/ft for Moment and Shear**

Compare computed Axle Moments and Shears for equivalent loads to actuals (per lane, without Impact):

Span	X	M equ LL	V equ LL	M LL actual	V LL actual	Moment diff	Shear diff	w equ for M
1	0.00	0.0	99.8	0.0	99.8	0.0%	0.0%	2.199
1	9.10	788.3	86.6	788.3	86.6	0.0%	0.0%	2.115
1	18.20	1359.5	73.4	1345.9	73.4	-1.0%	0.0%	2.032
1	27.30	1713.7	60.2	1706.5	60.2	-0.4%	0.0%	1.963
1	36.40	1850.9	47.0	1846.0	47.0	-0.3%	0.0%	1.858
1	45.50	1771.0	-33.8	1786.0	35.0	0.8%	3.5%	1.725
1	54.60	1850.9	-47.0	1846.0	-47.0	-0.3%	0.0%	1.858
1	63.70	1713.7	-60.2	1706.5	-60.2	-0.4%	0.0%	1.963
1	72.80	1359.5	-73.4	1345.9	-73.4	-1.0%	0.0%	2.032
1	81.90	788.3	-86.6	788.3	-86.6	0.0%	0.0%	2.115
1	91.00	0.0	-99.8	0.0	-99.8	0.0%	0.0%	2.199

LIVE LOAD and DYNAMIC LOAD, L+I

Rutland VT

Span: 91 ft
C.G. to Midspan - or +? - (user toggle for max w)

Vehicle: **3 Axle Straight**

Axle	Load, P, k	Spa, ft	Dist, XA, ft	P*X	Dist, XB, ft	R left, k	M at max pt
1	12		0	0	31.20	7.89	184.3
2	24	15	15	360	46.20	11.82	545.9
3	24	4	19	456	50.20	10.76	497.1
4	0	0	19	0	50.20	0.00	0.0
5	0	0	19	0	50.20	0.00	0.0
6	0	0	19	0	50.20	0.00	0.0
	60			816		30.5	1227.3

truck length 19 ft
C.G. Dist 13.60 ft
C.G. Offset Dist 1.40 ft

C.G. to Midspan -0.70 ft
X to max moment Pt 46.20 ft
X/L or 1-X/L 0.49

Loads for Moment Envelope due to Axle Loads:

equivalent distr load, w axles 1.291 k/ft for Moment per lane
correction midspan load, P axles -4.85 k for Moment per lane
axle Max moment at X 1227.3 ft k per lane

axle moment Distribution factor 1.120 lanes
axle Impact 0.33

w Axle (L+I)*Distr for Moment **1.92 k/ft for Moment**
correction midspan load, P axles (L+I)*Dis **-7.2 k for Moment (negative is up)**
axle Max moment (L+I)*Distr at X **1828.2 ft k**

Loads for Shear Envelope due to Axle Loads:

axle Max end shear, Vr 56.4 k for Shear per lane
or
w Axle (L+I)*Distr for Shear **0.98 k/ft for Shear**
P midspan Axle (L+I)*Distr for Shear **78.8 k at midspan for Shear**

Load for Moment and Shear due to Lane Load:

w lane 0.00 k/ft/lane
lane Distribution factor 1.120
lane Impact 0.00

wLane (L+I)*Distr **0.00 k/ft for Moment and Shear**

Compare computed Axle Moments and Shears for equivalent loads to actuals (per lane, without Impact):

Span	X	M equ LL	V equ LL	LL actual	LL actual	Moment diff	Shear diff	equ for M
1	0.00	0.0	56.4	0.0	56.4	0.0%	0.0%	1.243
1	9.10	459.0	50.4	459.0	50.4	0.0%	0.0%	1.232
1	18.20	811.1	44.4	808.8	44.4	-0.3%	0.0%	1.221
1	27.30	1056.3	38.4	1049.4	38.4	-0.7%	0.0%	1.207
1	36.40	1194.6	32.4	1180.8	32.4	-1.2%	0.0%	1.188
1	45.50	1225.9	-26.4	1227.0	26.4	0.1%	0.0%	1.185
1	54.60	1194.6	-32.4	1180.8	-32.4	-1.2%	0.0%	1.188
1	63.70	1056.3	-38.4	1049.4	-38.4	-0.7%	0.0%	1.207
1	72.80	811.1	-44.4	808.8	-44.4	-0.3%	0.0%	1.221
1	81.90	459.0	-50.4	459.0	-50.4	0.0%	0.0%	1.232
1	91.00	0.0	-56.4	0.0	-56.4	0.0%	0.0%	1.243

LIVE LOAD and DYNAMIC LOAD, L+I

Rutland VT

Span: 91 ft
C.G. to Midspan - or +? - (user toggle for max w)

Vehicle: **4 Axle Straight**

Axle	Load, P, k	Spa, ft	Dist, XA, ft	P*X	Dist, XB, ft	R left, k	M at max pt
1	12		0	0	29.46	8.12	175.4
2	19	15	15	285	44.46	9.72	419.1
3	19	4	19	361	48.46	8.88	407.3
4	19	4	23	437	52.46	8.05	369.0
5	0	0	23	0	52.46	0.00	0.0
6	0	0	23	0	52.46	0.00	0.0
	69			1083		34.8	1370.7

truck length	23	ft
C.G. Dist	15.70	ft
C.G. Offset Dist	0.70	ft
C.G. to Midspan	-0.35	ft
X to max moment Pt	45.85	ft
X/L or 1-X/L	0.50	

Loads for Moment Envelope due to Axle Loads:

equivalent distr load, w axles	1.454	k/ft for Moment per lane
correction midspan load, P axles	-5.93	k for Moment per lane
axle Max moment at X	1370.7	ft k per lane
axle moment Distribution factor	1.120	lanes
axle Impact	0.33	
w Axle (L+I)*Distr for Moment	**2.17**	**k/ft for Moment**
correction midspan load, P axles (L+I)*Distr	**-8.8**	**k for Moment (negative is up)**
axle Max moment (L+I)*Distr at X	**2041.8**	**ft k**

Loads for Shear Envelope due to Axle Loads:

axle Max end shear, Vr	63.5	k for Shear per lane
or		
w Axle (L+I)*Distr for Shear	**1.13**	**k/ft for Shear**
P midspan Axle (L+I)*Distr for Shear	**86.3**	**k at midspan for Shear**

Load for Moment and Shear due to Lane Load:

w lane	0.00	k/ft/lane
lane Distribution factor	1.120	
lane Impact	0.00	
wLane (L+I)*Distr	**0.00**	**k/ft for Moment and Shear**

Compare computed Axle Moments and Shears for equivalent loads to actuals (per lane, without Impact):

Span	X	M equ LL	V equ LL	LL actual	LL actual	Moment diff	Shear diff	equ for M
1	0.00	0.0	63.5	0.0	63.5	0.0%	0.0%	1.398
1	9.10	514.7	56.6	514.7	56.6	0.0%	0.0%	1.381
1	18.20	909.0	49.7	903.8	49.7	-0.6%	0.0%	1.364
1	27.30	1183.0	42.8	1174.2	42.8	-0.7%	0.0%	1.350
1	36.40	1336.6	35.9	1339.8	35.9	0.2%	0.0%	1.348
1	45.50	1369.8	-29.0	1379.8	29.0	0.7%	0.0%	1.333
1	54.60	1336.6	-35.9	1339.8	-35.9	0.2%	0.0%	1.348
1	63.70	1183.0	-42.8	1174.2	-42.8	-0.7%	0.0%	1.350
1	72.80	909.0	-49.7	903.8	-49.7	-0.6%	0.0%	1.364
1	81.90	514.7	-56.6	514.7	-56.6	0.0%	0.0%	1.381
1	91.00	0.0	-63.5	0.0	-63.5	0.0%	0.0%	1.398

LIVE LOAD and DYNAMIC LOAD, L+I

Rutland VT

Span: 91 ft
C.G. to Midspan - or +? + (user toggle for max w)

Vehicle: **5 Axle Semi**

Axle	Load, P, k	Spa, ft	Dist, XA, ft	P*X	Dist, XB, ft	R left, k	M at max pt
1	8		0	0	27.71	5.56	117.6
2	17	11	11	187	38.71	9.77	349.2
3	17	4	15	255	42.71	9.02	385.3
4	17	16	31	527	58.71	6.03	257.6
5	17	4	35	595	62.71	5.28	225.7
6	0	0	35	0	62.71	0.00	0.0
	76			1564		35.7	1335.5

truck length 35 ft
C.G. Dist 20.58 ft
C.G. Offset Dist 5.58 ft

C.G. to Midspan 2.79 ft
X to max moment Pt 42.71 ft
X/L or 1-X/L 0.47

Loads for Moment Envelope due to Axle Loads:

equivalent distr load, w axles 1.493 k/ft for Moment per lane
correction midspan load, P axles -9.55 k for Moment per lane
axle Max moment at X 1335.5 ft k per lane

axle moment Distribution factor 1.120 lanes
axle Impact 0.33

w Axle (L+I)*Distr for Moment **2.22 k/ft for Moment**
correction midspan load, P axles (L+I)*Distr **-14.2 k for Moment (negative is up)**
axle Max moment (L+I)*Distr at X **1989.4 ft k**

Loads for Shear Envelope due to Axle Loads:

axle Max end shear, Vr 64.0 k for Shear per lane
or
w Axle (L+I)*Distr for Shear **1.24 k/ft for Shear**
P midspan Axle (L+I)*Distr for Shear **77.3 k at midspan for Shear**

Load for Moment and Shear due to Lane Load:

w lane 0.00 k/ft/lane
lane Distribution factor 1.120
lane Impact 0.00

wLane (L+I)*Distr **0.00 k/ft for Moment and Shear**

Compare computed Axle Moments and Shears for equivalent loads to actuals (per lane, without Impact):

Span	X	M equ LL	V equ LL	I LL actual	V LL actual	Moment diff	Shear diff	equ for M
1	0.00	0.0	64.0	0.0	64.0	0.0%	0.0%	1.413
1	9.10	512.8	56.4	512.8	56.4	0.0%	0.0%	1.376
1	18.20	902.1	48.8	887.4	48.8	-1.7%	0.0%	1.339
1	27.30	1167.7	41.2	1146.8	41.2	-1.8%	0.0%	1.319
1	36.40	1309.6	33.6	1302.2	33.6	-0.6%	0.0%	1.310
1	45.50	1328.0	-26.0	1329.0	26.0	0.1%	0.0%	1.284
1	54.60	1309.6	-33.6	1302.2	-33.6	-0.6%	0.0%	1.310
1	63.70	1167.7	-41.2	1146.8	-41.2	-1.8%	0.0%	1.319
1	72.80	902.1	-48.8	887.4	-48.8	-1.7%	0.0%	1.339
1	81.90	512.8	-56.4	512.8	-56.4	0.0%	0.0%	1.376
1	91.00	0.0	-64.0	0.0	-64.0	0.0%	0.0%	1.413

LIVE LOAD and DYNAMIC LOAD, L+I

Rutland VT

Span: 91 ft
C.G. to Midspan - or +? - (user toggle for max w)

Vehicle: **H-20**

Axle	Load, P, k	Spa, ft	Dist, XA, ft	P*X	Dist, XB, ft	R left, k	M at max pt
1	8		0	0	32.90	5.11	127.6
2	32	14	14	448	46.90	15.51	727.3
3	0	0	14	0	46.90	0.00	0.0
4	0	0	14	0	46.90	0.00	0.0
5	0	0	14	0	46.90	0.00	0.0
6	0	0	14	0	46.90	0.00	0.0
	40			448		20.6	854.9

truck length	14	ft
C.G. Dist	11.20	ft
C.G. Offset Dist	2.80	ft
C.G. to Midspan	-1.40	ft
X to max moment Pt	46.90	ft
X/L or 1-X/L	0.48	

Loads for Moment Envelope due to Axle Loads:

equivalent distr load, w axles	0.879	k/ft for Moment per lane
correction midspan load, P axles	-2.46	k for Moment per lane
axle Max moment at X	854.9	ft k per lane
axle moment Distribution factor	1.120	lanes
axle Impact	0.33	
w Axle (L+I)*Distr for Moment	**1.31**	**k/ft for Moment**
correction midspan load, P axles (L+I)*Dis	**-3.7**	**k for Moment (negative is up)**
axle Max moment (L+I)*Distr at X	**1273.4**	**ft k**

Loads for Shear Envelope due to Axle Loads:

axle Max end shear, Vr	38.8	k for Shear per lane
or		
w Axle (L+I)*Distr for Shear	**0.65**	**k/ft for Shear**
P midspan Axle (L+I)*Distr for Shear	**55.9**	**k at midspan for Shear**

Load for Moment and Shear due to Lane Load:

w lane	0.00	k/ft/lane
lane Distribution factor	1.120	
lane Impact	0.00	
wLane (L+I)*Distr	**0.00**	**k/ft for Moment and Shear**

Compare computed Axle Moments and Shears for equivalent loads to actuals (per lane, without Impact):

Span	X	M equ LL	V equ LL	M LL actual	V LL actual	Moment diff	Shear diff
1	0.00	0.0	38.8	0.0	38.8	0.0%	0.0%
1	9.10	316.4	34.8	316.4	34.8	0.0%	0.0%
1	18.20	560.0	30.8	560.0	30.8	0.0%	0.0%
1	27.30	730.8	26.8	730.8	26.8	0.0%	0.0%
1	36.40	828.8	22.8	828.8	22.8	0.0%	0.0%
1	45.50	854.0	-18.8	854.0	18.8	0.0%	0.0%
1	54.60	828.8	-22.8	828.8	-22.8	0.0%	0.0%
1	63.70	730.8	-26.8	730.8	-26.8	0.0%	0.0%
1	72.80	560.0	-30.8	560.0	-30.8	0.0%	0.0%
1	81.90	316.4	-34.8	316.4	-34.8	0.0%	0.0%
1	91.00	0.0	-38.8	0.0	-38.8	0.0%	0.0%

LIVE LOAD and DYNAMIC LOAD, L+I

Rutland VT

Span: 91 ft
C.G. to Midspan - or +? + (user toggle for max w)

Vehicle: **HL-93**

Axle	Load, P, k	Spa, ft	Dist, XA, ft	P*X	Dist, XB, ft	R left, k	M at max pt
1	8		0	0	29.17	5.44	122.6
2	32	14	14	448	43.17	16.82	726.1
3	32	14	28	896	57.17	11.90	513.6
4	0	0	28	0	57.17	0.00	0.0
5	0	0	28	0	57.17	0.00	0.0
6	0	0	28	0	57.17	0.00	0.0
	72			1344		34.2	1362.3

truck length 28 ft
C.G. Dist 18.67 ft
C.G. Offset Dist 4.67 ft

C.G. to Midspan 2.33 ft
X to max moment Pt 43.17 ft
X/L or 1-X/L 0.47

Loads for Moment Envelope due to Axle Loads:

equivalent distr load, w axles 1.518 k/ft for Moment per lane
correction midspan load, P axles -9.49 k for Moment per lane
axle Max moment at X 1362.3 ft k per lane

axle moment Distribution factor 1.180 lanes
axle Impact 0.33

w Axle (L+I)*Distr for Moment **2.38 k/ft for Moment**
correction midspan load, P axles (L+I)*Distr **-14.9 k for Moment (negative is up)**
axle Max moment (L+I)*Distr at X **2138.0 ft k**

Loads for Shear Envelope due to Axle Loads:

axle Max end shear, Vr 64.6 k for Shear per lane
or
w Axle (L+I)*Distr for Shear **1.24 k/ft for Shear**
P midspan Axle (L+I)*Distr for Shear **89.8 k at midspan for Shear**

Load for Moment and Shear due to Lane Load:

w lane 0.64 k/ft/lane
lane Distribution factor 1.180
lane Impact 0.00

wLane (L+I)*Distr **0.76 k/ft for Moment and Shear**

Compare computed Axle Moments and Shears for equivalent loads to actuals (per lane, without Impact):

Span	X	M equ LL	V equ LL	M LL actual	V LL actual	Moment diff	Shear diff
1	0.00	0.0	64.6	0.0	64.6	0.0%	0.0%
1	9.10	522.5	57.4	522.5	57.4	0.0%	0.0%
1	18.20	919.3	50.2	913.9	50.2	-0.6%	0.0%
1	27.30	1190.3	43.0	1174.3	43.0	-1.4%	0.0%
1	36.40	1335.7	35.8	1326.1	35.8	-0.7%	0.0%
1	45.50	1355.4	-28.6	1358.0	28.6	0.2%	0.0%
1	54.60	1335.7	-35.8	1326.1	-35.8	-0.7%	0.0%
1	63.70	1190.3	-43.0	1174.3	-43.0	-1.4%	0.0%
1	72.80	919.3	-50.2	913.9	-50.2	-0.6%	0.0%
1	81.90	522.5	-57.4	522.5	-57.4	0.0%	0.0%
1	91.00	0.0	-64.6	0.0	-64.6	0.0%	0.0%

LIVE LOAD and DYNAMIC LOAD, L+I

Rutland VT

Span: 111 ft
C.G. to Midspan - or +? + (user toggle for max w)

Vehicle: **3S2**

Axle	Load, P, k	Spa, ft	Dist, XA, ft	P*X	Dist, XB, ft	R left, k	M at max pt
1	8		0	0	36.44	5.37	156.4
2	16	11	11	176	47.44	9.16	407.3
3	16	4	15	240	51.44	8.58	441.6
4	16	22	37	592	73.44	5.41	278.5
5	16	4	41	656	77.44	4.84	248.8
6	0	0	41	0	77.44	0.00	0.0
	72			1664		33.4	1532.7

truck length 41 ft
C.G. Dist 23.11 ft
C.G. Offset Dist 8.11 ft

C.G. to Midspan 4.06 ft
X to max moment Pt 51.44 ft
X/L or 1-X/L 0.46

Loads for Moment Envelope due to Axle Loads:

equivalent distr load, w axles 1.160 k/ft for Moment per lane
correction midspan load, P axles -9.51 k for Moment per lane
axle Max moment at X 1532.7 ft k per lane

axle moment Distribution factor 1.120 lanes
axle Impact 0.33

w Axle (L+I)*Distr for Moment **1.73 k/ft for Moment**
correction midspan load, P axles (L+I)*Distr **-14.2 k for Moment (negative is up)**
axle Max moment (L+I)*Distr at X **2283.1 ft k**

Loads for Shear Envelope due to Axle Loads:

axle Max end shear, Vr 60.4 k for Shear per lane
axle Max midspan shear, Vm 24.4 k for Shear per lane
or
w Axle for Shear 0.65 k/ft for Shear per lane
P midspan for Shear 48.8 k at midspan for Shear per lane

axle shear Distribution factor 1.120 lanes
axle Impact 0.330

axle Max end shear, Vr*(L+I)*Distr 90.0 k end for Shear
axle Max midspan shear, Vm*(L+I)*Distr 36.3 k midspan for Shear
or
w Axle (L+I)*Distr for Shear **0.97 k/ft for Shear**
P midspan Axle (L+I)*Distr for Shear **72.7 k at midspan for Shear**

Load for Moment and Shear due to Lane Load:

w lane 0.00 k/ft/lane
lane Distribution factor 1.120
lane Impact 0.00

wLane (L+I)*Distr **0.00 k/ft for Moment and Shear**

Compare computed Axle Moments and Shears for equivalent loads to actuals (per lane, without L+I):

Span	X	M equ LL	V equ LL	M LL actual	V LL actual	Moment diff	Shear diff	w equ for M
1	0.00	0.0	60.4	0.0	60.4	0.0%	0.0%	1.094
1	11.10	590.5	53.2	590.5	53.2	0.0%	0.0%	1.065
1	22.20	1038.0	46.0	1021.1	46.0	-1.7%	0.0%	1.036
1	33.30	1342.6	38.8	1328.7	38.8	-1.0%	0.0%	1.027
1	44.40	1504.2	31.6	1500.5	31.6	-0.3%	0.0%	1.015
1	55.50	1522.9	-24.4	1522.0	24.4	-0.1%	0.0%	0.988
1	66.60	1504.2	-31.6	1500.5	-31.6	-0.3%	0.0%	1.015
1	77.70	1342.6	-38.8	1328.7	-38.8	-1.0%	0.0%	1.027
1	88.80	1038.0	-46.0	1021.1	-46.0	-1.7%	0.0%	1.036
1	99.90	590.5	-53.2	590.5	-53.2	0.0%	0.0%	1.065
1	111.00	0.0	-60.4	0.0	-60.4	0.0%	0.0%	1.094

LIVE LOAD and DYNAMIC LOAD, L+I

Rutland VT

Span: 111 ft
C.G. to Midspan - or +? - (user toggle for max w)

Vehicle: **6 Axle Trailer**

Axle	Load, P, k	Spa, ft	Dist, XA, ft	P*X	Dist, XB, ft	R left, k	M at max pt
1	12		0	0	15.92	10.28	83.3
2	24	11	11	264	26.92	18.18	281.8
3	24	4.67	15.67	376.08	31.59	17.17	330.7
4	24	31	46.67	1120.08	62.59	10.47	655.1
5	24	4	50.67	1216.08	66.59	9.60	601.0
6	24	4	54.67	1312.08	70.59	8.74	546.9
	132			4288.32		74.4	2498.7

truck length	54.67	ft
C.G. Dist	32.49	ft
C.G. Offset Dist	14.18	ft
C.G. to Midspan	-7.09	ft
X to max moment Pt	62.59	ft
X/L or 1-X/L	0.44	

Loads for Moment Envelope due to Axle Loads:

equivalent distr load, w axles	2.187	k/ft for Moment per lane
correction midspan load, P axles	-33.67	k for Moment per lane
axle Max moment at X	2498.7	ft k per lane
axle moment Distribution factor	1.120	lanes
axle Impact	0.33	
w Axle (L+I)*Distr for Moment	**3.26**	**k/ft for Moment**
correction midspan load, P axles (L+I)*Distr	**-50.2**	**k for Moment (negative is up)**
axle Max moment (L+I)*Distr at X	**3722.1**	**ft k**

Loads for Shear Envelope due to Axle Loads:

axle Max end shear, Vr	105.6	k for Shear per lane
axle Max midspan shear, Vm	39.6	k for Shear per lane
or		
w Axle for Shear	1.19	k/ft for Shear per lane
P midspan for Shear	79.2	k at midspan for Shear per lane
axle shear Distribution factor	1.120	lanes
axle Impact	0.330	
axle Max end shear, Vr*(L+I)*Distr	157.3	k end for Shear
axle Max midspan shear, Vm*(L+I)*Distr	59.0	k midspan for Shear
or		
w Axle (L+I)*Distr for Shear	**1.77**	**k/ft for Shear**
P midspan Axle (L+I)*Distr for Shear	**118.0**	**k at midspan for Shear**

Load for Moment and Shear due to Lane Load:

w lane	0.00	k/ft/lane
lane Distribution factor	1.120	
lane Impact	0.00	
wLane (L+I)*Distr	**0.00**	**k/ft for Moment and Shear**

Compare computed Axle Moments and Shears for equivalent loads to actuals (per lane, without L+I):

Span	X	M equ LL	V equ LL	M LL actual	V LL actual	Moment diff	Shear diff	w equ for M
1	0.00	0.0	105.6	0.0	105.6	0.0%	0.0%	1.907
1	11.10	1025.9	92.4	1025.9	92.4	0.0%	0.0%	1.850
1	22.20	1782.2	79.2	1768.3	79.2	-0.8%	0.0%	1.794
1	33.30	2269.1	66.0	2260.9	66.0	-0.4%	0.0%	1.748
1	44.40	2486.5	52.8	2479.6	52.8	-0.3%	0.0%	1.677
1	55.50	2434.3	-39.6	2438.9	39.6	0.2%	0.0%	1.584
1	66.60	2486.5	-52.8	2479.6	-52.8	-0.3%	0.0%	1.677
1	77.70	2269.1	-66.0	2260.9	-66.0	-0.4%	0.0%	1.748
1	88.80	1782.2	-79.2	1768.3	-79.2	-0.8%	0.0%	1.794
1	99.90	1025.9	-92.4	1025.9	-92.4	0.0%	0.0%	1.850
1	111.00	0.0	-105.6	0.0	-105.6	0.0%	0.0%	1.907

LIVE LOAD and DYNAMIC LOAD, L+I

Rutland VT

Span: 111 ft
C.G. to Midspan - or +? - (user toggle for max w)

Vehicle: **3 Axle Straight**

Axle	Load, P, k	Spa, ft	Dist, XA, ft	P*X	Dist, XB, ft	R left, k	M at max pt
1	12		0	0	41.20	7.55	244.1
2	24	15	15	360	56.20	11.85	665.9
3	24	4	19	456	60.20	10.98	617.3
4	0	0	19	0	60.20	0.00	0.0
5	0	0	19	0	60.20	0.00	0.0
6	0	0	19	0	60.20	0.00	0.0
	60			816		30.4	1527.3

truck length 19 ft
C.G. Dist 13.60 ft
C.G. Offset Dist 1.40 ft

C.G. to Midspan -0.70 ft
X to max moment Pt 56.20 ft
X/L or 1-X/L 0.49

Loads for Moment Envelope due to Axle Loads:

equivalent distr load, w axles 1.062 k/ft for Moment per lane
correction midspan load, P axles -3.96 k for Moment per lane
axle Max moment at X 1527.3 ft k per lane

axle moment Distribution factor 1.120 lanes
axle Impact 0.33

w Axle (L+I)*Distr for Moment **1.58 k/ft for Moment**
correction midspan load, P axles (L+I)*Distr **-5.9 k for Moment (negative is up)**
axle Max moment (L+I)*Distr at X **2275.0 ft k**

Loads for Shear Envelope due to Axle Loads:

axle Max end shear, Vr 57.1 k for Shear per lane
axle Max midspan shear, Vm 27.1 k for Shear per lane
or
w Axle for Shear 0.54 k/ft for Shear per lane
P midspan for Shear 54.2 k at midspan for Shear per lane

axle shear Distribution factor 1.120 lanes
axle Impact 0.330

axle Max end shear, Vr*(L+I)*Distr 85.0 k end for Shear
axle Max midspan shear, Vm*(L+I)*Distr 40.3 k midspan for Shear
or
w Axle (L+I)*Distr for Shear **0.81 k/ft for Shear**
P midspan Axle (L+I)*Distr for Shear **80.7 k at midspan for Shear**

Load for Moment and Shear due to Lane Load:

w lane 0.00 k/ft/lane
lane Distribution factor 1.120
lane Impact 0.00

wLane (L+I)*Distr **0.00 k/ft for Moment and Shear**

Compare computed Axle Moments and Shears for equivalent loads to actuals (per lane, without L+I):

Span	X	M equ LL	V equ LL /	LL actual /	LL actual	Moment diff	Shear diff	equ for M
1	0.00	0.0	57.1	0.0	57.1	0.0%	0.0%	1.030
1	11.10	567.0	51.1	567.0	51.1	0.0%	0.0%	1.023
1	22.20	1003.1	45.1	1000.8	45.1	-0.2%	0.0%	1.015
1	33.30	1308.3	39.1	1301.4	39.1	-0.5%	0.0%	1.006
1	44.40	1482.7	33.1	1468.8	33.1	-0.9%	0.0%	0.993
1	55.50	1526.1	-27.1	1527.0	27.1	0.1%	0.0%	0.991
1	66.60	1482.7	-33.1	1468.8	-33.1	-0.9%	0.0%	0.993
1	77.70	1308.3	-39.1	1301.4	-39.1	-0.5%	0.0%	1.006
1	88.80	1003.1	-45.1	1000.8	-45.1	-0.2%	0.0%	1.015
1	99.90	567.0	-51.1	567.0	-51.1	0.0%	0.0%	1.023
1	111.00	0.0	-57.1	0.0	-57.1	0.0%	0.0%	1.030

LIVE LOAD and DYNAMIC LOAD, L+I

Rutland VT

Span: 111 ft
C.G. to Midspan - or +? - (user toggle for max w)

Vehicle: **4 Axle Straight**

Axle	Load, P, k	Spa, ft	Dist, XA, ft	P*X	Dist, XB, ft	R left, k	M at max pt
1	12		0	0	39.46	7.73	235.3
2	19	15	15	285	54.46	9.68	514.1
3	19	4	19	361	58.46	8.99	502.3
4	19	4	23	437	62.46	8.31	464.1
5	0	0	23	0	62.46	0.00	0.0
6	0	0	23	0	62.46	0.00	0.0
	69			1083		34.7	1715.7

truck length	23	ft
C.G. Dist	15.70	ft
C.G. Offset Dist	0.70	ft
C.G. to Midspan	-0.35	ft
X to max moment Pt	55.85	ft
X/L or 1-X/L	0.50	

Loads for Moment Envelope due to Axle Loads:

equivalent distr load, w axles	1.201	k/ft for Moment per lane
correction midspan load, P axles	-4.85	k for Moment per lane
axle Max moment at X	1715.7	ft k per lane
axle moment Distribution factor	1.120	lanes
axle Impact	0.33	
w Axle (L+I)*Distr for Moment	**1.79**	**k/ft for Moment**
correction midspan load, P axles (L+I)*Distr	**-7.2**	**k for Moment (negative is up)**
axle Max moment (L+I)*Distr at X	**2555.7**	**ft k**

Loads for Shear Envelope due to Axle Loads:

axle Max end shear, Vr	64.5	k for Shear per lane
axle Max midspan shear, Vm	30.0	k for Shear per lane
or		
w Axle for Shear	0.62	k/ft for Shear per lane
P midspan for Shear	59.9	k at midspan for Shear per lane
axle shear Distribution factor	1.120	lanes
axle Impact	0.330	
axle Max end shear, Vr*(L+I)*Distr	96.0	k end for Shear
axle Max midspan shear, Vm*(L+I)*Distr	44.6	k midspan for Shear
or		
w Axle (L+I)*Distr for Shear	**0.93**	**k/ft for Shear**
P midspan Axle (L+I)*Distr for Shear	**89.3**	**k at midspan for Shear**

Load for Moment and Shear due to Lane Load:

w lane	0.00	k/ft/lane
lane Distribution factor	1.120	
lane Impact	0.00	
wLane (L+I)*Distr	**0.00**	**k/ft for Moment and Shear**

Compare computed Axle Moments and Shears for equivalent loads to actuals (per lane, without L+I):

Span	X	M equ LL	V equ LL /	LL actual /	LL actual	Moment diff	Shear diff /	equ for M
1	0.00	0.0	64.5	0.0	64.5	0.0%	0.0%	1.164
1	11.10	638.9	57.6	638.9	57.6	0.0%	0.0%	1.152
1	22.20	1129.9	50.7	1124.6	50.7	-0.5%	0.0%	1.141
1	33.30	1472.8	43.8	1464.0	43.8	-0.6%	0.0%	1.132
1	44.40	1667.9	36.9	1671.0	36.9	0.2%	0.0%	1.130
1	55.50	1714.9	-30.0	1724.8	30.0	0.6%	0.0%	1.120
1	66.60	1667.9	-36.9	1671.0	-36.9	0.2%	0.0%	1.130
1	77.70	1472.8	-43.8	1464.0	-43.8	-0.6%	0.0%	1.132
1	88.80	1129.9	-50.7	1124.6	-50.7	-0.5%	0.0%	1.141
1	99.90	638.9	-57.6	638.9	-57.6	0.0%	0.0%	1.152
1	111.00	0.0	-64.5	0.0	-64.5	0.0%	0.0%	1.164

LIVE LOAD and DYNAMIC LOAD, L+I

Rutland VT

Span: 111 ft
C.G. to Midspan - or +? + (user toggle for max w)

Vehicle: **5 Axle Semi**

Axle	Load, P, k	Spa, ft	Dist, XA, ft	P*X	Dist, XB, ft	R left, k	M at max pt
1	8		0	0	37.71	5.28	158.4
2	17	11	11	187	48.71	9.54	434.8
3	17	4	15	255	52.71	8.93	470.6
4	17	16	31	527	68.71	6.48	341.4
5	17	4	35	595	72.71	5.86	309.1
6	0	0	35	0	72.71	0.00	0.0
	76			1564		36.1	1714.3

truck length	35	ft
C.G. Dist	20.58	ft
C.G. Offset Dist	5.58	ft
C.G. to Midspan	2.79	ft
X to max moment Pt	52.71	ft
X/L or 1-X/L	0.47	

Loads for Moment Envelope due to Axle Loads:

equivalent distr load, w axles	1.250	k/ft for Moment per lane
correction midspan load, P axles	-7.80	k for Moment per lane
axle Max moment at X	1714.3	ft k per lane
axle moment Distribution factor	1.120	lanes
axle Impact	0.33	
w Axle (L+I)*Distr for Moment	**1.86**	**k/ft for Moment**
correction midspan load, P axles (L+I)*Distr	**-11.6**	**k for Moment (negative is up)**
axle Max moment (L+I)*Distr at X	**2553.7**	**ft k**

Loads for Shear Envelope due to Axle Loads:

axle Max end shear, Vr	66.1	k for Shear per lane
axle Max midspan shear, Vm	28.1	k for Shear per lane
or		
w Axle for Shear	0.68	k/ft for Shear per lane
P midspan for Shear	56.3	k at midspan for Shear per lane
axle shear Distribution factor	1.120	lanes
axle Impact	0.330	
axle Max end shear, Vr*(L+I)*Distr	98.5	k end for Shear
axle Max midspan shear, Vm*(L+I)*Distr	41.9	k midspan for Shear
or		
w Axle (L+I)*Distr for Shear	**1.02**	**k/ft for Shear**
P midspan Axle (L+I)*Distr for Shear	**83.8**	**k at midspan for Shear**

Load for Moment and Shear due to Lane Load:

w lane	0.00	k/ft/lane
lane Distribution factor	1.120	
lane Impact	0.00	
wLane (L+I)*Distr	**0.00**	**k/ft for Moment and Shear**

Compare computed Axle Moments and Shears for equivalent loads to actuals (per lane, without L+I):

Span	X	M equ LL	V equ LL /	LL actual /	LL actual	Moment diff	Shear diff	equ for M
1	0.00	0.0	66.1	0.0	66.1	0.0%	0.0%	1.196
1	11.10	649.6	58.5	649.6	58.5	0.0%	0.0%	1.172
1	22.20	1145.3	50.9	1130.6	50.9	-1.3%	0.0%	1.147
1	33.30	1487.0	43.3	1466.0	43.3	-1.4%	0.0%	1.133
1	44.40	1674.6	35.7	1667.0	35.7	-0.5%	0.0%	1.128
1	55.50	1708.3	-28.1	1709.0	28.1	0.0%	0.0%	1.110
1	66.60	1674.6	-35.7	1667.0	-35.7	-0.5%	0.0%	1.128
1	77.70	1487.0	-43.3	1466.0	-43.3	-1.4%	0.0%	1.133
1	88.80	1145.3	-50.9	1130.6	-50.9	-1.3%	0.0%	1.147
1	99.90	649.6	-58.5	649.6	-58.5	0.0%	0.0%	1.172
1	111.00	0.0	-66.1	0.0	-66.1	0.0%	0.0%	1.196

LIVE LOAD and DYNAMIC LOAD, L+I

Rutland VT

Span: 111 ft
C.G. to Midspan - or +? - (user toggle for max w)

Vehicle: **H-20**

Axle	Load, P, k	Spa, ft	Dist, XA, ft	P*X	Dist, XB, ft	R left, k	M at max pt
1	8		0	0	42.90	4.91	167.3
2	32	14	14	448	56.90	15.60	887.4
3	0	0	14	0	56.90	0.00	0.0
4	0	0	14	0	56.90	0.00	0.0
5	0	0	14	0	56.90	0.00	0.0
6	0	0	14	0	56.90	0.00	0.0
	40			448		20.5	1054.7

truck length 14 ft
C.G. Dist 11.20 ft
C.G. Offset Dist 2.80 ft

C.G. to Midspan -1.40 ft
X to max moment Pt 56.90 ft
X/L or 1-X/L 0.49

Loads for Moment Envelope due to Axle Loads:

equivalent distr load, w axles 0.721 k/ft for Moment per lane
correction midspan load, P axles -2.02 k for Moment per lane
axle Max moment at X 1054.7 ft k per lane

axle moment Distribution factor 1.120 lanes
axle Impact 0.33

w Axle (L+I)*Distr for Moment **1.07 k/ft for Moment**
correction midspan load, P axles (L+I)*Dist **-3.0 k for Moment (negative is up)**
axle Max moment (L+I)*Distr at X **1571.1 ft k**

Loads for Shear Envelope due to Axle Loads:

axle Max end shear, Vr 39.0 k for Shear per lane
axle Max midspan shear, Vm 19.0 k for Shear per lane
or
w Axle for Shear 0.36 k/ft for Shear per lane
P midspan for Shear 38.0 k at midspan for Shear per lane

axle shear Distribution factor 1.120 lanes
axle Impact 0.330

axle Max end shear, Vr*(L+I)*Distr 58.1 k end for Shear
axle Max midspan shear, Vm*(L+I)*Distr 28.3 k midspan for Shear
or
w Axle (L+I)*Distr for Shear **0.54 k/ft for Shear**
P midspan Axle (L+I)*Distr for Shear **56.6 k at midspan for Shear**

Load for Moment and Shear due to Lane Load:

w lane 0.00 k/ft/lane
lane Distribution factor 1.120
lane Impact 0.00

wLane (L+I)*Distr **0.00 k/ft for Moment and Shear**

Compare computed Axle Moments and Shears for equivalent loads to actuals (per lane, without L+I):

Span	X	M equ LL	V equ LL	M LL actual	V LL actual	Moment diff	Shear diff
1	0.00	0.0	39.0	0.0	39.0	0.0%	0.0%
1	11.10	388.4	35.0	388.4	35.0	0.0%	0.0%
1	22.20	688.0	31.0	688.0	31.0	0.0%	0.0%
1	33.30	898.8	27.0	898.8	27.0	0.0%	0.0%
1	44.40	1020.8	23.0	1020.8	23.0	0.0%	0.0%
1	55.50	1054.0	-19.0	1054.0	19.0	0.0%	0.0%
1	66.60	1020.8	-23.0	1020.8	-23.0	0.0%	0.0%
1	77.70	898.8	-27.0	898.8	-27.0	0.0%	0.0%
1	88.80	688.0	-31.0	688.0	-31.0	0.0%	0.0%
1	99.90	388.4	-35.0	388.4	-35.0	0.0%	0.0%
1	111.00	0.0	-39.0	0.0	-39.0	0.0%	0.0%

LIVE LOAD and DYNAMIC LOAD, L+I

Rutland VT

Span: 111 ft
C.G. to Midspan - or +? + (user toggle for max w)

Vehicle: **HL-93**

Axle	Load, P, k	Spa, ft	Dist, XA, ft	P*X	Dist, XB, ft	R left, k	M at max pt
1	8		0	0	39.17	5.18	163.3
2	32	14	14	448	53.17	16.67	886.4
3	32	14	28	896	67.17	12.64	671.8
4	0	0	28	0	67.17	0.00	0.0
5	0	0	28	0	67.17	0.00	0.0
6	0	0	28	0	67.17	0.00	0.0
	72			1344		34.5	1721.5

truck length 28 ft
C.G. Dist 18.67 ft
C.G. Offset Dist 4.67 ft

C.G. to Midspan 2.33 ft
X to max moment Pt 53.17 ft
X/L or 1-X/L 0.48

Loads for Moment Envelope due to Axle Loads:

equivalent distr load, w axles 1.254 k/ft for Moment per lane
correction midspan load, P axles -7.74 k for Moment per lane
axle Max moment at X 1721.5 ft k per lane

axle moment Distribution factor 1.180 lanes
axle Impact 0.33

w Axle (L+I)*Distr for Moment **1.97 k/ft for Moment**
correction midspan load, P axles (L+I)*Distr **-12.1 k for Moment (negative is up)**
axle Max moment (L+I)*Distr at X **2701.8 ft k**

Loads for Shear Envelope due to Axle Loads:

axle Max end shear, Vr 65.9 k for Shear per lane
axle Max midspan shear, Vm 29.9 k for Shear per lane
or
w Axle for Shear 0.65 k/ft for Shear per lane
P midspan for Shear 59.9 k at midspan for Shear per lane

axle shear Distribution factor 1.180 lanes
axle Impact 0.330

axle Max end shear, Vr*(L+I)*Distr 103.5 k end for Shear
axle Max midspan shear, Vm*(L+I)*Distr 47.0 k midspan for Shear
or
w Axle (L+I)*Distr for Shear **1.02 k/ft for Shear**
P midspan Axle (L+I)*Distr for Shear **94.0 k at midspan for Shear**

Load for Moment and Shear due to Lane Load:

w lane 0.64 k/ft/lane
lane Distribution factor 1.180
lane Impact 0.00

wLane (L+I)*Distr **0.76 k/ft for Moment and Shear**

Compare computed Axle Moments and Shears for equivalent loads to actuals (per lane, without L+I):

Span	X	M equ LL	V equ LL	M LL actual	V LL actual	Moment diff	Shear diff
1	0.00	0.0	65.9	0.0	65.9	0.0%	0.0%
1	11.10	652.1	58.7	652.1	58.7	0.0%	0.0%
1	22.20	1149.7	51.5	1144.3	51.5	-0.5%	0.0%
1	33.30	1492.9	44.3	1476.7	44.3	-1.1%	0.0%
1	44.40	1681.6	37.1	1671.7	37.1	-0.6%	0.0%
1	55.50	1715.9	-29.9	1718.0	29.9	0.1%	0.0%
1	66.60	1681.6	-37.1	1671.7	-37.1	-0.6%	0.0%
1	77.70	1492.9	-44.3	1476.7	-44.3	-1.1%	0.0%
1	88.80	1149.7	-51.5	1144.3	-51.5	-0.5%	0.0%
1	99.90	652.1	-58.7	652.1	-58.7	0.0%	0.0%
1	111.00	0.0	-65.9	0.0	-65.9	0.0%	0.0%

VT truss span 1, for Rating
Units: feet, kips

LinPro 2.7.5
File: C:\Users\densfo_t\Documents\LinPro files\vt truss span 1 REV 3.aln
Units: kN-m

Input Data

Coordinates of joints/supports

Joint	X	Y	Rx	Ry	Rt	SPRING.X	SPRING.Y	SPRING.ROT	CS.ROT
0	0.000	0.000	1	1	0	0.00E+000	0.00E+000	0.00E+000	0.00
1	11.375	0.000	0	0	0	0.00E+000	0.00E+000	0.00E+000	0.00
2	22.750	0.000	0	0	0	0.00E+000	0.00E+000	0.00E+000	0.00
3	34.125	0.000	0	0	0	0.00E+000	0.00E+000	0.00E+000	0.00
4	45.500	0.000	0	0	0	0.00E+000	0.00E+000	0.00E+000	0.00
5	56.875	0.000	0	0	0	0.00E+000	0.00E+000	0.00E+000	0.00
6	68.250	0.000	0	0	0	0.00E+000	0.00E+000	0.00E+000	0.00
7	79.625	0.000	0	0	0	0.00E+000	0.00E+000	0.00E+000	0.00
8	91.000	0.000	0	1	0	0.00E+000	0.00E+000	0.00E+000	0.00
9	11.375	11.250	0	0	0	0.00E+000	0.00E+000	0.00E+000	0.00
10	34.125	11.250	0	0	0	0.00E+000	0.00E+000	0.00E+000	0.00
11	56.875	11.250	0	0	0	0.00E+000	0.00E+000	0.00E+000	0.00
12	79.625	11.250	0	0	0	0.00E+000	0.00E+000	0.00E+000	0.00

Members

Member	Joint I	Joint J	Type	Releases
0:	0	1	BOT CHORD1	111111
1:	1	2	BOT CHORD1	111111
2:	2	3	BOT CHORD1	111111
3:	3	4	BOT CHORD1	111111
4:	4	5	BOT CHORD1	111111
5:	5	6	BOT CHORD1	111111
6:	6	7	BOT CHORD1	111111
7:	7	8	BOT CHORD1	111111
8:	0	9	END DIAGONAL	111111
9:	9	2	DIAGONAL	111111
10:	2	10	DIAGONAL	111111
11:	10	4	DIAGONAL	111111
12:	4	11	DIAGONAL	111111
13:	11	6	DIAGONAL	111111
14:	6	12	DIAGONAL	111111
15:	12	8	END DIAGONAL	111111
16:	1	9	VERTICAL	111111
17:	3	10	VERTICAL	111111
18:	5	11	VERTICAL	111111
19:	7	12	VERTICAL	111111
20:	9	10	TOP CHORD1	111111
21:	10	11	TOP CHORD1	111111
22:	11	12	TOP CHORD1	111111

Cross Sections

0: BOT CHORD1
A= 1.840E-01
I= 1.000E-04
E= 4176000.00
alpha= 1.2E-05

1: TOP CHORD1
A= 3.470E-01
I= 1.000E-04
E= 4176000.00
alpha= 1.2E-05

2: DIAGONAL
A= 1.240E-01
I= 1.000E-04
E= 4176000.00
alpha= 1.2E-05

3: VERTICAL
A= 1.490E-01
I= 1.000E-04
E= 4176000.00
alpha= 1.2E-05

4: END DIAGONAL
A= 3.472E+03
I= 1.000E-04
E= 4176000.00
alpha= 1.2E-05

VT truss span 1, for Rating
Units: feet, kips

```
Load
   0: Distributed Load
           Load Case: DC1  STEEL WT
           Load Name: Distributed
           Coordinate System: Global Y
           a= 0.00
           b= 1.00  On Member
           p1= -1.00
           p2= -1.00

   1: Distributed Load
           Load Case: DC2  DECK
           Load Name: Distributed
           Coordinate System: Global Y
           a= 0.00
           b= 1.00  On Member
           p1= -1.95
           p2= -1.95

   2: Distributed Load
           Load Case: DC3  SDL LT
           Load Name: Distributed
           Coordinate System: Global Y
           a= 0.00
           b= 1.00  On Member
           p1= -1.10
           p2= -1.10

   3: Distributed Load
           Load Case: DW  FWS UTIL
           Load Name: Distributed
           Coordinate System: Global Y
           a= 0.00
           b= 1.00  On Member
           p1= -0.60
           p2= -0.60

   4: Distributed Load
           Load Case: DC3  SDL RT
           Load Name: Distributed
           Coordinate System: Global Y
           a= 0.00
           b= 1.00  On Member
           p1= -0.20
           p2= -0.20

   5: Distributed Load
           Load Case: DC1  STEEL WT
           Load Name: Distributed
           Coordinate System: Global Y
           a= 0.00
           b= 1.00  On Member
           p1= -0.85
           p2= -0.85

   6: Distributed Load
           Load Case: DC3  SDL LT
           Load Name: Distributed
           Coordinate System: Global Y
           a= 0.00
           b= 1.00  On Member
           p1= -1.00
           p2= -1.00

   7: Distributed Load
           Load Case: L+I  MOMENT TRUCK ENV
           Load Name: Distributed
           Coordinate System: Global Y
           a= 0.00
           b= 1.00  On Member
           p1= -2.38
           p2= -2.38

   8: Distributed Load
           Load Case: L+I  SHEAR TRUCK ENV
           Load Name: Distributed
           Coordinate System: Global Y
           a= 0.00
           b= 1.00  On Member
```

```
        p1= -1.24
        p2= -1.24

9: Distributed Load
        Load Case: L+I  M&V LANE
        Load Name: Distributed
        Coordinate System: Global Y
        a= 0.00
        b= 1.00  On Member
        p1= -0.76
        p2= -0.76

10: Distributed Load
        Load Case: FATIGUE MOMENT ENV
        Load Name: Distributed
        Coordinate System: Global Y
        a= 0.00
        b= 1.00  On Member
        p1= -1.95
        p2= -1.95

11: Distributed Load
        Load Case: FATIGUE SHEAR ENV
        Load Name: Distributed
        Coordinate System: Global Y
        a= 0.00
        b= 1.00  On Member
        p1= -1.07
        p2= -1.07

12: Distributed Load
        Load Case: DC1  STEEL WT
        Load Name: Distributed
        Coordinate System: Global Y
        a= 0.00
        b= 1.00  On Member
        p1= -3.80
        p2= -3.80

13: Distributed Load
        Load Case: DC DEAD LT
        Load Name: Distributed
        Coordinate System: Global Y
        a= 0.00
        b= 1.00  On Member
        p1= -3.80
        p2= -3.80

14: Point Load
        Load Case: L+I  MOMENT TRUCK ENV
        Load Name: Point
        Coordinate System: Global
        a= 0.00  Absolute from Joint I
        Force X= 0.00
        Force Y= 14.90
        Moment M= 0.00

15: Point Load
        Load Case: L+I  SHEAR TRUCK ENV
        Load Name: Point
        Coordinate System: Global
        a= 0.00  Absolute from Joint I
        Force X= 0.00
        Force Y= -89.80
        Moment M= 0.00

16: Point Load
        Load Case: FATIGUE MOMENT ENV
        Load Name: Point
        Coordinate System: Global
        a= 0.00  Absolute from Joint I
        Force X= 0.00
        Force Y= 22.60
        Moment M= 0.00

17: Point Load
        Load Case: FATIGUE SHEAR ENV
        Load Name: Point
        Coordinate System: Global
        a= 0.00  Absolute from Joint I
        Force X= 0.00
        Force Y= -58.60
```

```
        Moment M= 0.00

18: Distributed Load
        Load Case: FATIGUE MOMENT ENV
        Load Name: Distributed
        Coordinate System: Global Y
        a= 0.00
        b= 1.00  On Member
        p1= -1.27
        p2= -1.27

19: Distributed Load
        Load Case: FATIGUE SHEAR ENV
        Load Name: Distributed
        Coordinate System: Global Y
        a= 0.00
        b= 1.00  On Member
        p1= -0.70
        p2= -0.70

20: Point Load
        Load Case: FATIGUE MOMENT ENV
        Load Name: Point
        Coordinate System: Global
        a= 0.00  Absolute from Joint I
        Force X= 0.00
        Force Y= 14.70
        Moment M= 0.00

21: Point Load
        Load Case: FATIGUE SHEAR ENV
        Load Name: Point
        Coordinate System: Global
        a= 0.00  Absolute from Joint I
        Force X= 0.00
        Force Y= -38.20
        Moment M= 0.00

22: Distributed Load
        Load Case: UNIT DISTR DOWN -1.0 K/FT
        Load Name: Distributed
        Coordinate System: Global Y
        a= 0.00
        b= 1.00  On Member
        p1= 1.00
        p2= 1.00

23: Point Load
        Load Case: UNIT POINT MIDSPAN UP +1.0 K
        Load Name: Point
        Coordinate System: Global
        a= 0.00  Absolute from Joint I
        Force X= 0.00
        Force Y= 1.00
        Moment M= 0.00

24: Distributed Load
        Load Case: UNIT DISTR DOWN -1.0 K/FT
        Load Name: Distributed
        Coordinate System: Global Y
        a= 0.00
        b= 1.00  On Member
        p1= -1.00
        p2= -1.00

25: Point Load
        Load Case: UNIT POINT MIDSPAN DOWN -1.0 K
        Load Name: Point
        Coordinate System: Global
        a= 0.00  Absolute from Joint I
        Force X= 0.00
        Force Y= -1.00
        Moment M= 0.00

26: Distributed Load
        Load Case: UNIT DISTR DOWN -1.0 K/FT
        Load Name: Distributed
        Coordinate System: Global Y
        a= 0.00
        b= 1.00  On Member
        p1= -1.00
        p2= -1.00
```

VT truss span 1, for Rating
Units: feet, kips

Load Applied on Joints

Joint	Applied Loads
4:	14, 15, 20, 21, 23, 25

Load Applied on Members

Member	Applied Loads
0:	1, 3, 4, 5, 6, 7, 8, 9, 13, 18, 19, 26
1:	1, 3, 4, 5, 6, 7, 8, 9, 13, 18, 19, 24
2:	1, 3, 4, 5, 6, 7, 8, 9, 13, 18, 19, 24
3:	1, 3, 4, 5, 6, 7, 8, 9, 13, 18, 19, 24
4:	1, 3, 4, 5, 6, 7, 8, 9, 13, 18, 19, 24
5:	1, 3, 4, 5, 6, 7, 8, 9, 13, 18, 19, 24
6:	1, 3, 4, 5, 6, 7, 8, 9, 13, 18, 19, 24
7:	1, 3, 4, 5, 6, 7, 8, 9, 13, 18, 19, 24

Load Cases

0: DC1 STEEL WT
1: DC2 DECK
2: DC3 SDL LT
3: DW FWS UTIL
4: L+I MOMENT TRUCK ENV
5: L+I SHEAR TRUCK ENV
6: L+I M&V LANE
7: DC3 SDL RT
8: FATIGUE MOMENT ENV
9: FATIGUE SHEAR ENV
10: DC DEAD LT
11: UNIT DISTR DOWN -1.0 K/FT
12: UNIT POINT MIDSPAN UP +1.0 K
13: UNIT POINT MIDSPAN DOWN -1.0 K

Load Combinations

0: SCV I DEAD DEFL LT = 1.00xDC1 STEEL WT + 1.00xDC2 DECK + 1.00xDC3 SDL LT + 1.00xDW FWS UTIL + 0.00xL+I MOMI
M&V LANE + 0.00xDC3 SDL RT + 0.00xFATIGUE MOMENT ENV + 0.00xFATIGUE SHEAR ENV + 0.00xDC DEAD LT + 0.00xUNIT DISTR DOU
0.00xUNIT POINT MIDSPAN DOWN -1.0 K

1: SVC I DEAD DEFL RT = 1.00xDC1 STEEL WT + 1.00xDC2 DECK + 0.00xDC3 SDL LT + 1.00xDW FWS UTIL + 0.00xL+I MOMI
M&V LANE + 1.00xDC3 SDL RT + 0.00xFATIGUE MOMENT ENV + 0.00xFATIGUE SHEAR ENV + 0.00xDC DEAD LT + 0.00xUNIT DISTR DOU
0.00xUNIT POINT MIDSPAN DOWN -1.0 K

2: STRI MOMENT = 0.00xDC1 STEEL WT + 0.00xDC2 DECK + 0.00xDC3 SDL LT + 1.50xDW FWS UTIL + 1.75xL+I MOMENT TRUC
LANE + 0.00xDC3 SDL RT + 0.00xFATIGUE MOMENT ENV + 0.00xFATIGUE SHEAR ENV + 1.25xDC DEAD LT + 0.00xUNIT DISTR DOWN -1
0.00xUNIT POINT MIDSPAN DOWN -1.0 K

3: STRI SHEAR = 0.00xDC1 STEEL WT + 0.00xDC2 DECK + 0.00xDC3 SDL LT + 1.50xDW FWS UTIL + 0.00xL+I MOMENT TRUCI
LANE + 0.00xDC3 SDL RT + 0.00xFATIGUE MOMENT ENV + 0.00xFATIGUE SHEAR ENV + 1.25xDC DEAD LT + 0.00xUNIT DISTR DOWN -1
0.00xUNIT POINT MIDSPAN DOWN -1.0 K

4: SVCII MOMENT = 0.00xDC1 STEEL WT + 0.00xDC2 DECK + 0.00xDC3 SDL LT + 1.00xDW FWS UTIL + 1.30xL+I MOMENT TRU
LANE + 0.00xDC3 SDL RT + 0.00xFATIGUE MOMENT ENV + 0.00xFATIGUE SHEAR ENV + 1.00xDC DEAD LT + 0.00xUNIT DISTR DOWN -1
0.00xUNIT POINT MIDSPAN DOWN -1.0 K

5: SVCII SHEAR = 0.00xDC1 STEEL WT + 0.00xDC2 DECK + 0.00xDC3 SDL LT + 1.00xDW FWS UTIL + 0.00xL+I MOMENT TRUC
LANE + 0.00xDC3 SDL RT + 0.00xFATIGUE MOMENT ENV + 0.00xFATIGUE SHEAR ENV + 1.00xDC DEAD LT + 0.00xUNIT DISTR DOWN -1
0.00xUNIT POINT MIDSPAN DOWN -1.0 K

6: FATGI MOMENT = 0.00xDC1 STEEL WT + 0.00xDC2 DECK + 0.00xDC3 SDL LT + 0.00xDW FWS UTIL + 0.00xL+I MOMENT TRU
LANE + 0.00xDC3 SDL RT + 1.50xFATIGUE MOMENT ENV + 0.00xFATIGUE SHEAR ENV + 0.00xDC DEAD LT + 0.00xUNIT DISTR DOWN -1
0.00xUNIT POINT MIDSPAN DOWN -1.0 K

7: FATGI SHEAR = 0.00xDC1 STEEL WT + 0.00xDC2 DECK + 0.00xDC3 SDL LT + 0.00xDW FWS UTIL + 0.00xL+I MOMENT TRUC
LANE + 0.00xDC3 SDL RT + 0.00xFATIGUE MOMENT ENV + 1.50xFATIGUE SHEAR ENV + 0.00xDC DEAD LT + 0.00xUNIT DISTR DOWN -1
0.00xUNIT POINT MIDSPAN DOWN -1.0 K

8: L+I MOMENT 3S2 ENV = 0.00xDC1 STEEL WT + 0.00xDC2 DECK + 0.00xDC3 SDL LT + 0.00xDW FWS UTIL + 0.00xL+I MOMI
M&V LANE + 0.00xDC3 SDL RT + 0.00xFATIGUE MOMENT ENV + 0.00xFATIGUE SHEAR ENV + 0.00xDC DEAD LT + 1.73xUNIT DISTR DOU
0.00xUNIT POINT MIDSPAN DOWN -1.0 K

9: L+I SHEAR 3S2 ENV = 0.00xDC1 STEEL WT + 0.00xDC2 DECK + 0.00xDC3 SDL LT + 0.00xDW FWS UTIL + 0.00xL+I MOMEN
M&V LANE + 0.00xDC3 SDL RT + 0.00xFATIGUE MOMENT ENV + 0.00xFATIGUE SHEAR ENV + 0.00xDC DEAD LT + 0.97xUNIT DISTR DOU
72.70xUNIT POINT MIDSPAN DOWN -1.0 K

10: L+I MOMENT 6AXLE ENV = 0.00xDC1 STEEL WT + 0.00xDC2 DECK + 0.00xDC3 SDL LT + 0.00xDW FWS UTIL + 0.00xL+I M
0.00xL+I M&V LANE + 0.00xDC3 SDL RT + 0.00xFATIGUE MOMENT ENV + 0.00xFATIGUE SHEAR ENV + 0.00xDC DEAD LT + 3.26xUNIT
+1.0 K + 0.00xUNIT POINT MIDSPAN DOWN -1.0 K

11: L+I SHEAR 6AXLE ENV = 0.00xDC1 STEEL WT + 0.00xDC2 DECK + 0.00xDC3 SDL LT + 0.00xDW FWS UTIL + 0.00xL+I MO
0.00xL+I M&V LANE + 0.00xDC3 SDL RT + 0.00xFATIGUE MOMENT ENV + 0.00xFATIGUE SHEAR ENV + 0.00xDC DEAD LT + 1.77xUNIT
+1.0 K + 118.00xUNIT POINT MIDSPAN DOWN -1.0 K

12: L+I MOMENT 3AXLE ENV = 0.00xDC1 STEEL WT + 0.00xDC2 DECK + 0.00xDC3 SDL LT + 0.00xDW FWS UTIL + 0.00xL+I M
0.00xL+I M&V LANE + 0.00xDC3 SDL RT + 0.00xFATIGUE MOMENT ENV + 0.00xFATIGUE SHEAR ENV + 0.00xDC DEAD LT + 1.58xUNIT
+1.0 K + 0.00xUNIT POINT MIDSPAN DOWN -1.0 K

13: L+I SHEAR 3AXLE ENV = 0.00xDC1 STEEL WT + 0.00xDC2 DECK + 0.00xDC3 SDL LT + 0.00xDW FWS UTIL + 0.00xL+I MO
0.00xL+I M&V LANE + 0.00xDC3 SDL RT + 0.00xFATIGUE MOMENT ENV + 0.00xFATIGUE SHEAR ENV + 0.00xDC DEAD LT + 0.81xUNIT
+1.0 K + 80.70xUNIT POINT MIDSPAN DOWN -1.0 K

14: L+I MOMENT 4AXLE ENV = 0.00xDC1 STEEL WT + 0.00xDC2 DECK + 0.00xDC3 SDL LT + 0.00xDW FWS UTIL + 0.00xL+I M
0.00xL+I M&V LANE + 0.00xDC3 SDL RT + 0.00xFATIGUE MOMENT ENV + 0.00xFATIGUE SHEAR ENV + 0.00xDC DEAD LT + 1.79xUNIT
+1.0 K + 0.00xUNIT POINT MIDSPAN DOWN -1.0 K

15: L+I SHEAR 4AXLE ENV = 0.00xDC1 STEEL WT + 0.00xDC2 DECK + 0.00xDC3 SDL LT + 0.00xDW FWS UTIL + 0.00xL+I MO

0.00xL+I M&V LANE + 0.00xDC3 SDL RT + 0.00xFATIGUE MOMENT ENV + 0.00xFATIGUE SHEAR ENV + 0.00xDC DEAD LT + 0.93xUNI
+1.0 K + 89.30xUNIT POINT MIDSPAN DOWN -1.0 K
16: L+I MOMENT 5AXLE ENV = 0.00xDC1 STEEL WT + 0.00xDC2 DECK + 0.00xDC3 SDL LT + 0.00xDW FWS UTIL + 0.00xL+I M
0.00xL+I M&V LANE + 0.00xDC3 SDL RT + 0.00xFATIGUE MOMENT ENV + 0.00xFATIGUE SHEAR ENV + 0.00xDC DEAD LT + 1.86xUNI
+1.0 K + 0.00xUNIT POINT MIDSPAN DOWN -1.0 K
17: L+I SHEAR 5AXLE ENV = 0.00xDC1 STEEL WT + 0.00xDC2 DECK + 0.00xDC3 SDL LT + 0.00xDW FWS UTIL + 0.00xL+I MO
0.00xL+I M&V LANE + 0.00xDC3 SDL RT + 0.00xFATIGUE MOMENT ENV + 0.00xFATIGUE SHEAR ENV + 0.00xDC DEAD LT + 1.02xUNI
+1.0 K + 83.80xUNIT POINT MIDSPAN DOWN -1.0 K
18: L+I MOMENT H20 ENV = 0.00xDC1 STEEL WT + 0.00xDC2 DECK + 0.00xDC3 SDL LT + 0.00xDW FWS UTIL + 0.00xL+I MON
+I M&V LANE + 0.00xDC3 SDL RT + 0.00xFATIGUE MOMENT ENV + 0.00xFATIGUE SHEAR ENV + 0.00xDC DEAD LT + 1.07xUNIT DISTR
0.00xUNIT POINT MIDSPAN DOWN -1.0 K
19: L+I SHEAR H20 ENV = 0.00xDC1 STEEL WT + 0.00xDC2 DECK + 0.00xDC3 SDL LT + 0.00xDW FWS UTIL + 0.00xL+I MOMI
M&V LANE + 0.00xDC3 SDL RT + 0.00xFATIGUE MOMENT ENV + 0.00xFATIGUE SHEAR ENV + 0.00xDC DEAD LT + 0.54xUNIT DISTR DOU
56.60xUNIT POINT MIDSPAN DOWN -1.0 K

Masses

Masses Applied on Joints
Joint Applied Masses

==========
Static Analysis Results
_____

_____
Load Case: DW FWS UTIL

_____
Load Case: L+I MOMENT TRUCK ENV

_____
Load Case: L+I SHEAR TRUCK ENV

_____
Load Case: L+I M&V LANE

_____
Load Case: DC DEAD LT

_____
Load Case: UNIT DISTR DOWN -1.0 K/FT

_____
Load Case: UNIT POINT MIDSPAN UP +1.0 K

_____
Load Case: UNIT POINT MIDSPAN DOWN -1.0 K

_____
Load Combination: L+I MOMENT 3S2 ENV = 0.00xDC1 STEEL WT + 0.00xDC2 DECK + 0.00xDC3 SDL LT + 0.00xDW FWS UTIL + 0
0.00xL+I M&V LANE + 0.00xDC3 SDL RT + 0.00xFATIGUE MOMENT ENV + 0.00xFATIGUE SHEAR ENV + 0.00xDC DEAD LT + 1.73xUNI
+1.0 K + 0.00xUNIT POINT MIDSPAN DOWN -1.0 K

_____
Load Combination: L+I SHEAR 3S2 ENV = 0.00xDC1 STEEL WT + 0.00xDC2 DECK + 0.00xDC3 SDL LT + 0.00xDW FWS UTIL + 0.0
0.00xL+I M&V LANE + 0.00xDC3 SDL RT + 0.00xFATIGUE MOMENT ENV + 0.00xFATIGUE SHEAR ENV + 0.00xDC DEAD LT + 0.97xUNI
+1.0 K + 72.70xUNIT POINT MIDSPAN DOWN -1.0 K

VT truss span 1, for Rating
Units: feet, kips

Load Combination: L+I MOMENT 6AXLE ENV = 0.00xDC1 STEEL WT + 0.00xDC2 DECK + 0.00xDC3 SDL LT + 0.00xDW FWS UTIL +
0.00xL+I M&V LANE + 0.00xDC3 SDL RT + 0.00xFATIGUE MOMENT ENV + 0.00xFATIGUE SHEAR ENV + 0.00xDC DEAD LT + 3.26xUNI
+1.0 K + 0.00xUNIT POINT MIDSPAN DOWN -1.0 K

Load Combination: L+I SHEAR 6AXLE ENV = 0.00xDC1 STEEL WT + 0.00xDC2 DECK + 0.00xDC3 SDL LT + 0.00xDW FWS UTIL + 0
0.00xL+I M&V LANE + 0.00xDC3 SDL RT + 0.00xFATIGUE MOMENT ENV + 0.00xFATIGUE SHEAR ENV + 0.00xDC DEAD LT + 1.77xUNI
+1.0 K + 118.00xUNIT POINT MIDSPAN DOWN -1.0 K

Load Combination: L+I MOMENT 3AXLE ENV = 0.00xDC1 STEEL WT + 0.00xDC2 DECK + 0.00xDC3 SDL LT + 0.00xDW FWS UTIL +
0.00xL+I M&V LANE + 0.00xDC3 SDL RT + 0.00xFATIGUE MOMENT ENV + 0.00xFATIGUE SHEAR ENV + 0.00xDC DEAD LT + 1.58xUNI
+1.0 K + 0.00xUNIT POINT MIDSPAN DOWN -1.0 K

Load Combination: L+I SHEAR 3AXLE ENV = 0.00xDC1 STEEL WT + 0.00xDC2 DECK + 0.00xDC3 SDL LT + 0.00xDW FWS UTIL + 0
0.00xL+I M&V LANE + 0.00xDC3 SDL RT + 0.00xFATIGUE MOMENT ENV + 0.00xFATIGUE SHEAR ENV + 0.00xDC DEAD LT + 0.81xUNI
+1.0 K + 80.70xUNIT POINT MIDSPAN DOWN -1.0 K

Load Combination: L+I MOMENT 4AXLE ENV = 0.00xDC1 STEEL WT + 0.00xDC2 DECK + 0.00xDC3 SDL LT + 0.00xDW FWS UTIL +
0.00xL+I M&V LANE + 0.00xDC3 SDL RT + 0.00xFATIGUE MOMENT ENV + 0.00xFATIGUE SHEAR ENV + 0.00xDC DEAD LT + 1.79xUNI
+1.0 K + 0.00xUNIT POINT MIDSPAN DOWN -1.0 K

Load Combination: L+I SHEAR 4AXLE ENV = 0.00xDC1 STEEL WT + 0.00xDC2 DECK + 0.00xDC3 SDL LT + 0.00xDW FWS UTIL + 0
0.00xL+I M&V LANE + 0.00xDC3 SDL RT + 0.00xFATIGUE MOMENT ENV + 0.00xFATIGUE SHEAR ENV + 0.00xDC DEAD LT + 0.93xUNI
+1.0 K + 89.30xUNIT POINT MIDSPAN DOWN -1.0 K

Load Combination: L+I MOMENT 5AXLE ENV = 0.00xDC1 STEEL WT + 0.00xDC2 DECK + 0.00xDC3 SDL LT + 0.00xDW FWS UTIL +
0.00xL+I M&V LANE + 0.00xDC3 SDL RT + 0.00xFATIGUE MOMENT ENV + 0.00xFATIGUE SHEAR ENV + 0.00xDC DEAD LT + 1.86xUNI
+1.0 K + 0.00xUNIT POINT MIDSPAN DOWN -1.0 K

Load Combination: L+I SHEAR 5AXLE ENV = 0.00xDC1 STEEL WT + 0.00xDC2 DECK + 0.00xDC3 SDL LT + 0.00xDW FWS UTIL + 0
0.00xL+I M&V LANE + 0.00xDC3 SDL RT + 0.00xFATIGUE MOMENT ENV + 0.00xFATIGUE SHEAR ENV + 0.00xDC DEAD LT + 1.02xUNI
+1.0 K + 83.80xUNIT POINT MIDSPAN DOWN -1.0 K

Load Combination: L+I MOMENT H20 ENV = 0.00xDC1 STEEL WT + 0.00xDC2 DECK + 0.00xDC3 SDL LT + 0.00xDW FWS UTIL + 0
0.00xL+I M&V LANE + 0.00xDC3 SDL RT + 0.00xFATIGUE MOMENT ENV + 0.00xFATIGUE SHEAR ENV + 0.00xDC DEAD LT + 1.07xUNI
+1.0 K + 0.00xUNIT POINT MIDSPAN DOWN -1.0 K

Load Combination: L+I SHEAR H20 ENV = 0.00xDC1 STEEL WT + 0.00xDC2 DECK + 0.00xDC3 SDL LT + 0.00xDW FWS UTIL + 0.0
0.00xL+I M&V LANE + 0.00xDC3 SDL RT + 0.00xFATIGUE MOMENT ENV + 0.00xFATIGUE SHEAR ENV + 0.00xDC DEAD LT + 0.54xUNI
+1.0 K + 56.60xUNIT POINT MIDSPAN DOWN -1.0 K

VT truss span 1, for Rating
Units: feet, kips

Structure, Load Case: DW FWS UTIL

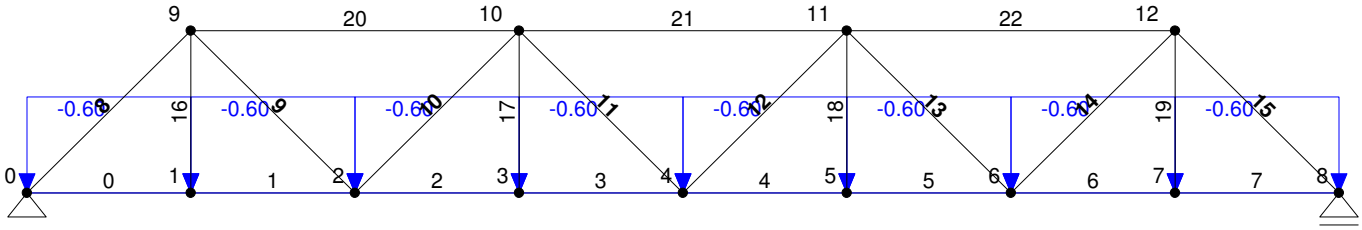

VT truss span 1, for Rating
Units: feet, kips

Structure, Load Case: L+I MOMENT TRUCK ENV

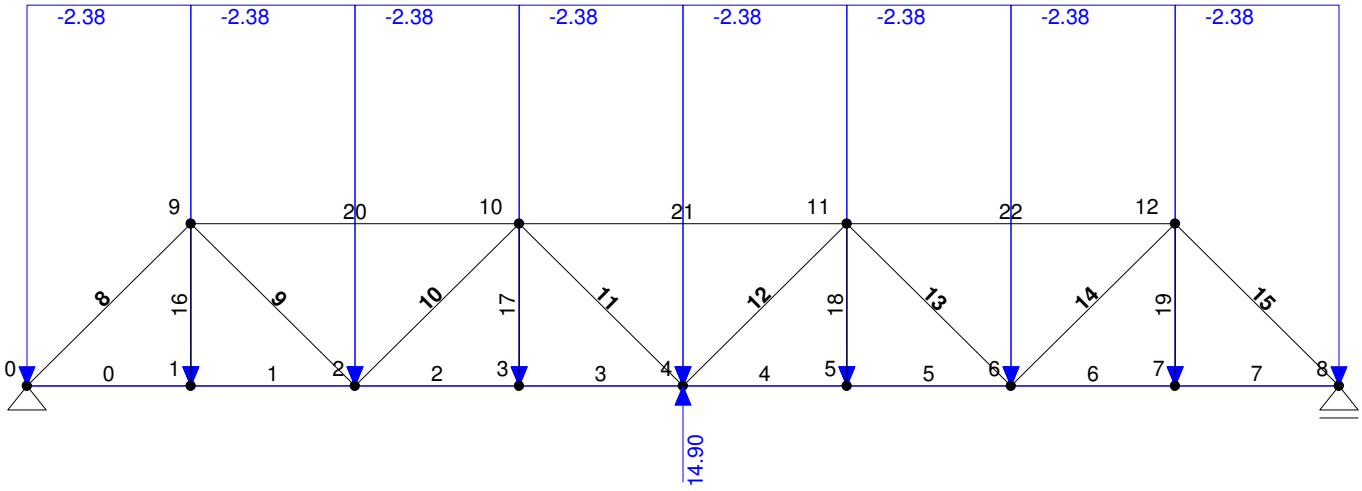

VT truss span 1, for Rating
Units: feet, kips

Structure, Load Case: L+I SHEAR TRUCK ENV

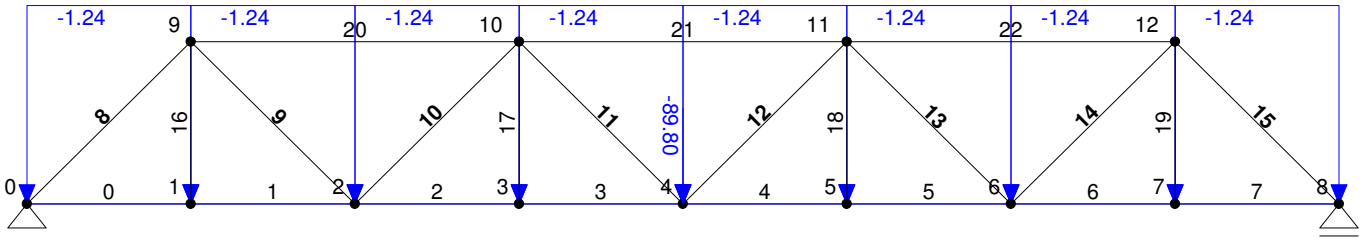

VT truss span 1, for Rating
Units: feet, kips

Structure, Load Case: L+I M&V LANE

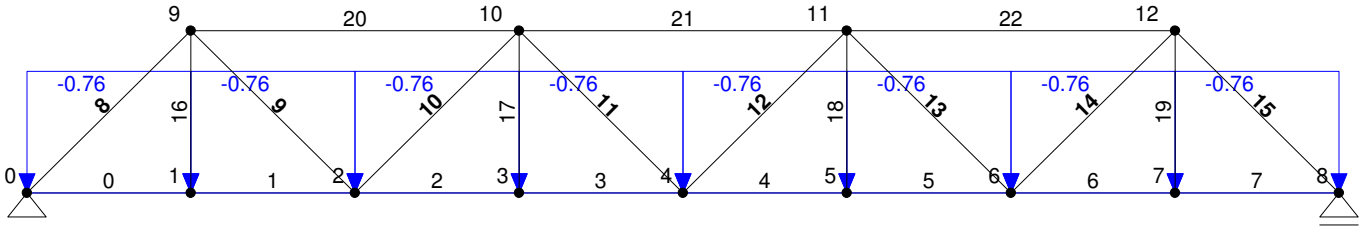

VT truss span 1, for Rating
Units: feet, kips

Structure, Load Case: DC DEAD LT

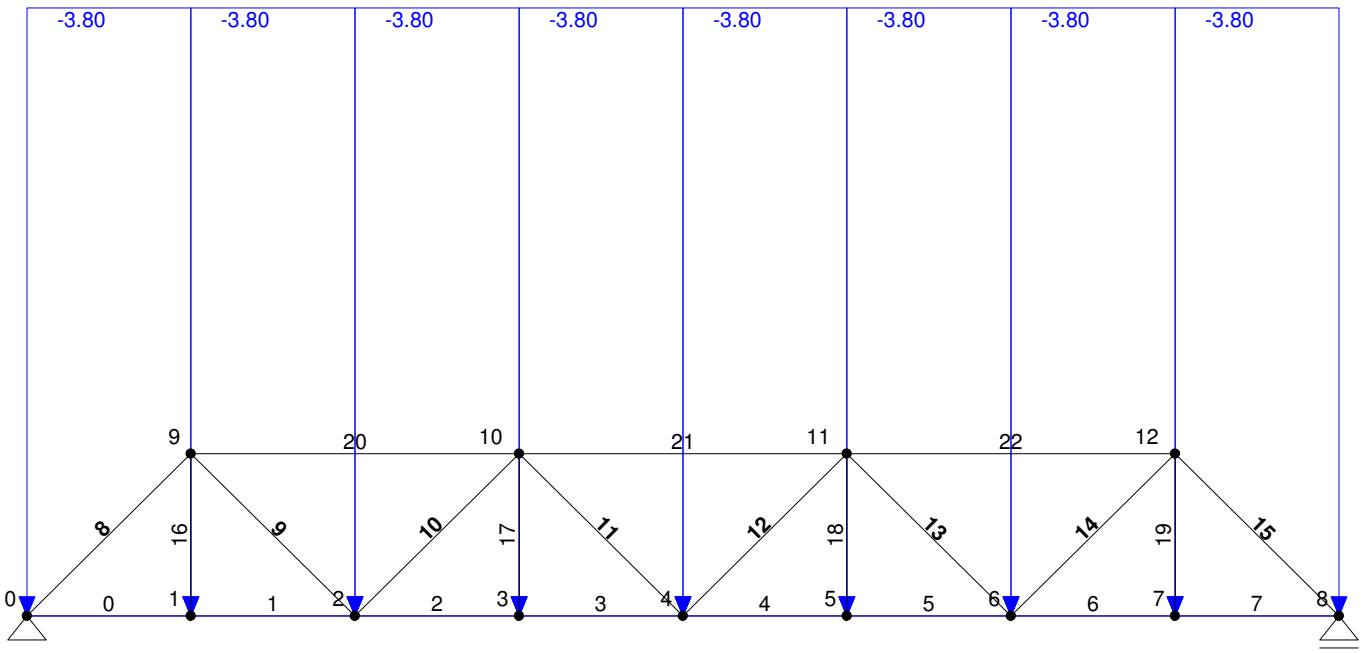

VT truss span 1, for Rating
Units: feet, kips

Structure, Load Case: UNIT DISTR DOWN -1.0 K/FT

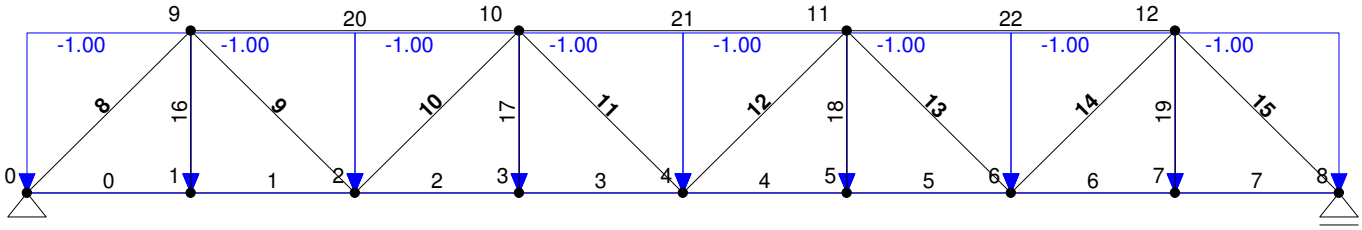

VT truss span 1, for Rating
Units: feet, kips

Structure, Load Case: UNIT POINT MIDSPAN UP +1.0 K

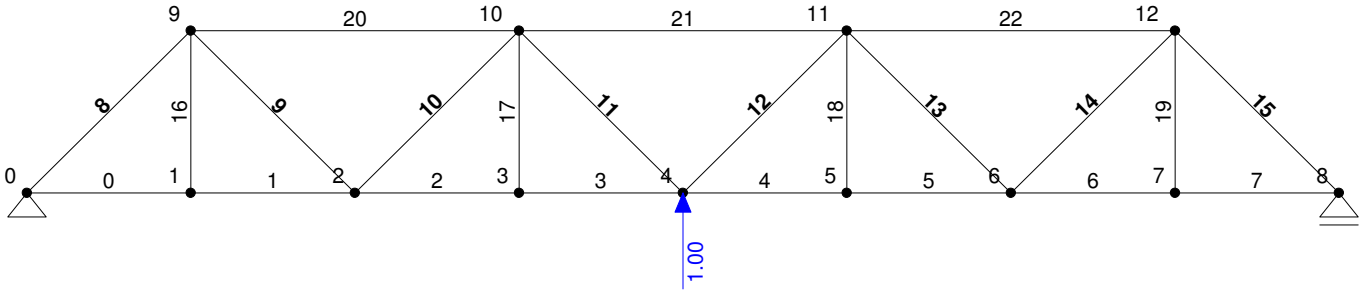

VT truss span 1, for Rating
Units: feet, kips

Structure, Load Case: UNIT POINT MIDSPAN DOWN -1.0 K

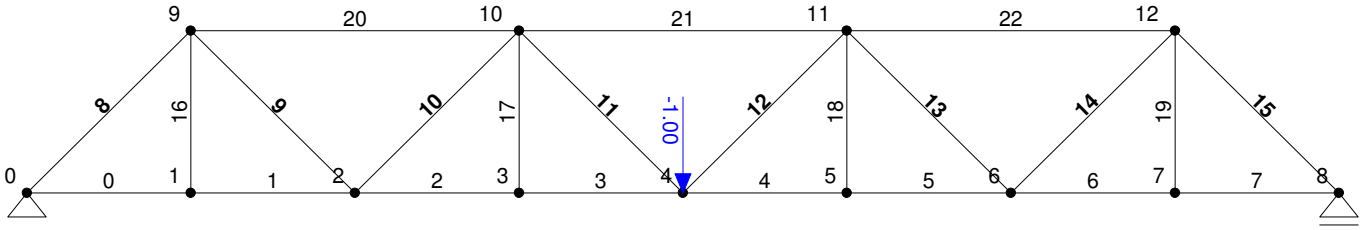

VT truss span 1, for Rating
Units: feet, kips

Axial Force Diagram, Case: DW FWS UTIL

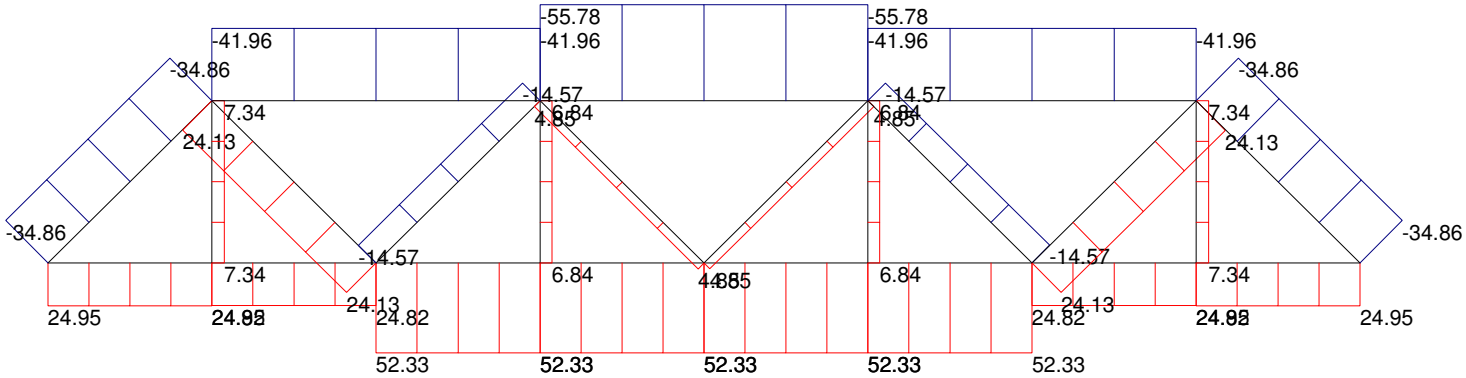

VT truss span 1, for Rating
Units: feet, kips

Reactions, Case: DW FWS UTIL

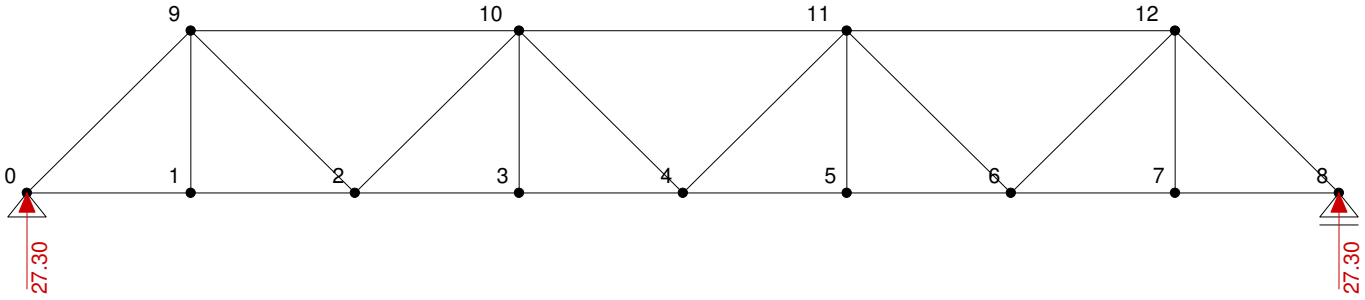

VT truss span 1, for Rating
Units: feet, kips

Axial Force Diagram, Case: L+I MOMENT TRUCK ENV

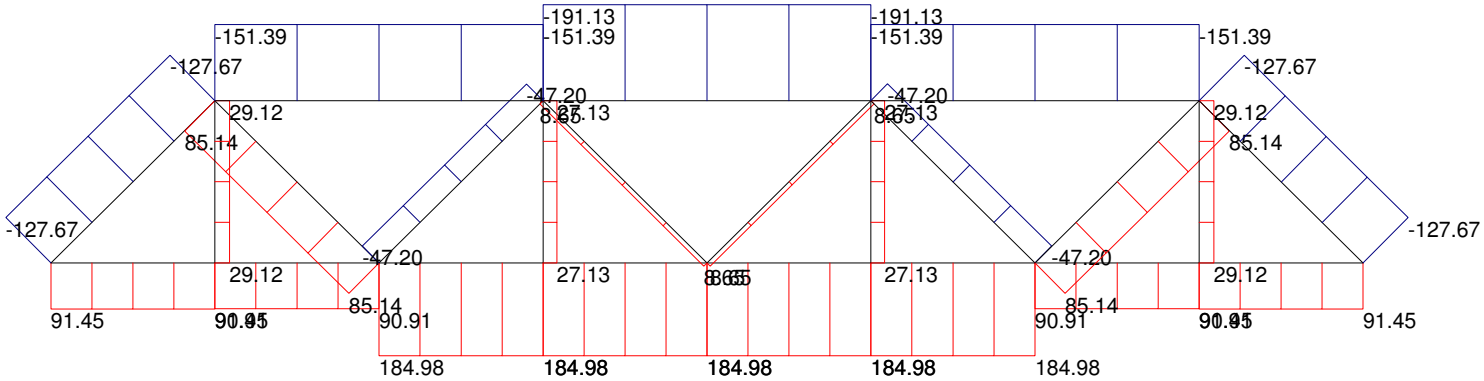

VT truss span 1, for Rating
Units: feet, kips

Reactions, Case: L+I MOMENT TRUCK ENV

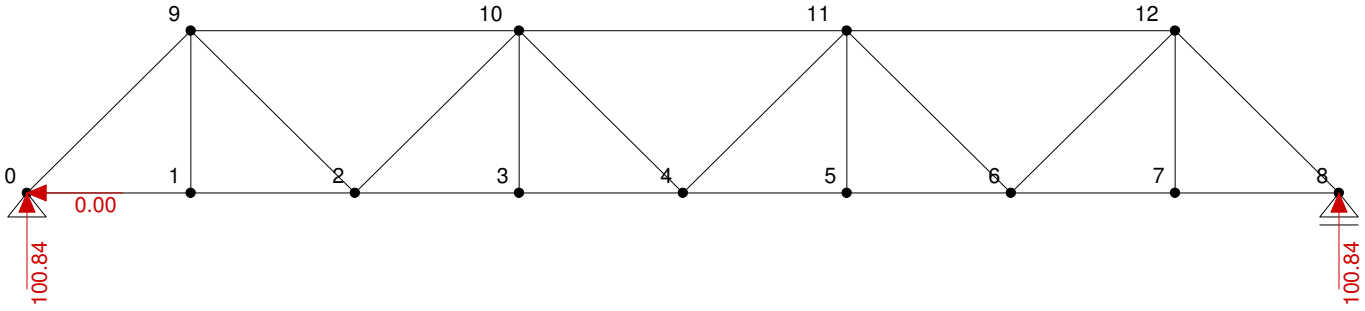

VT truss span 1, for Rating
Units: feet, kips

Axial Force Diagram, Case: L+I SHEAR TRUCK ENV

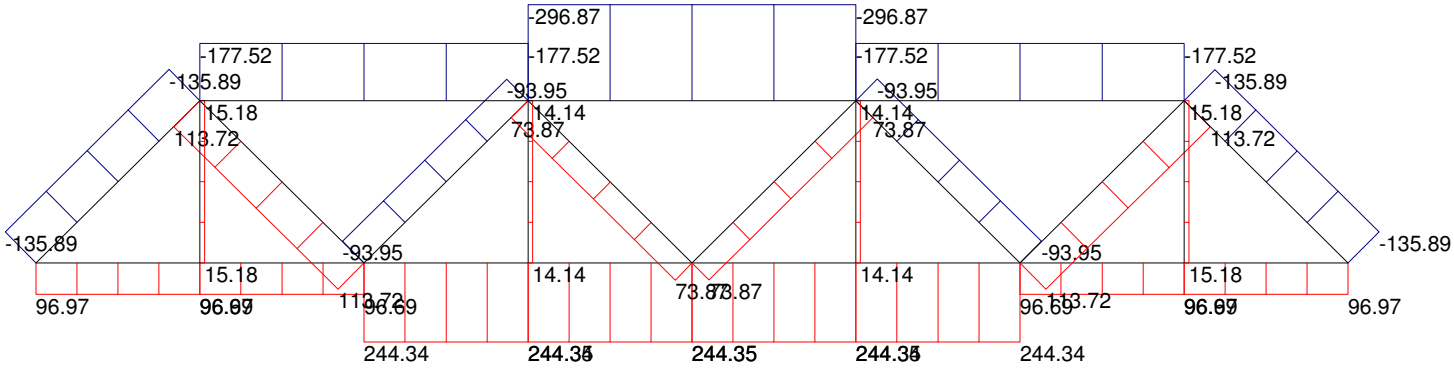

VT truss span 1, for Rating
Units: feet, kips

Reactions, Case: L+I SHEAR TRUCK ENV

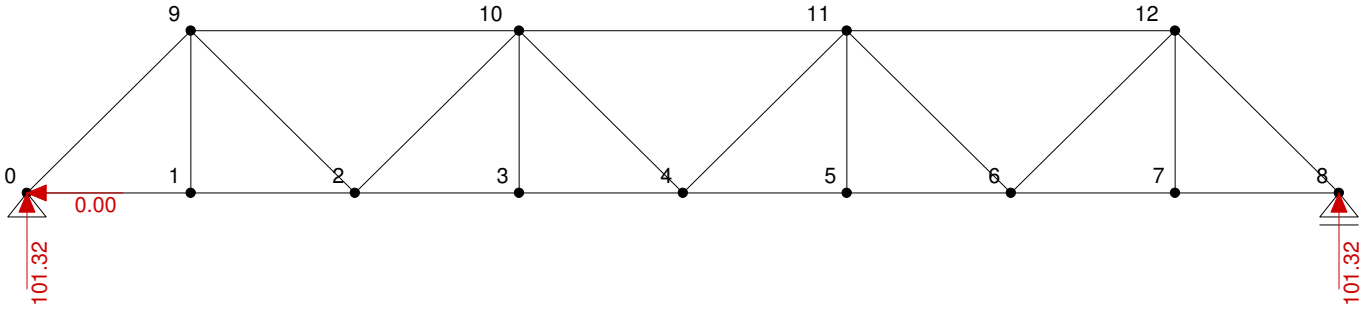

VT truss span 1, for Rating
Units: feet, kips

Axial Force Diagram, Case: L+I M&V LANE

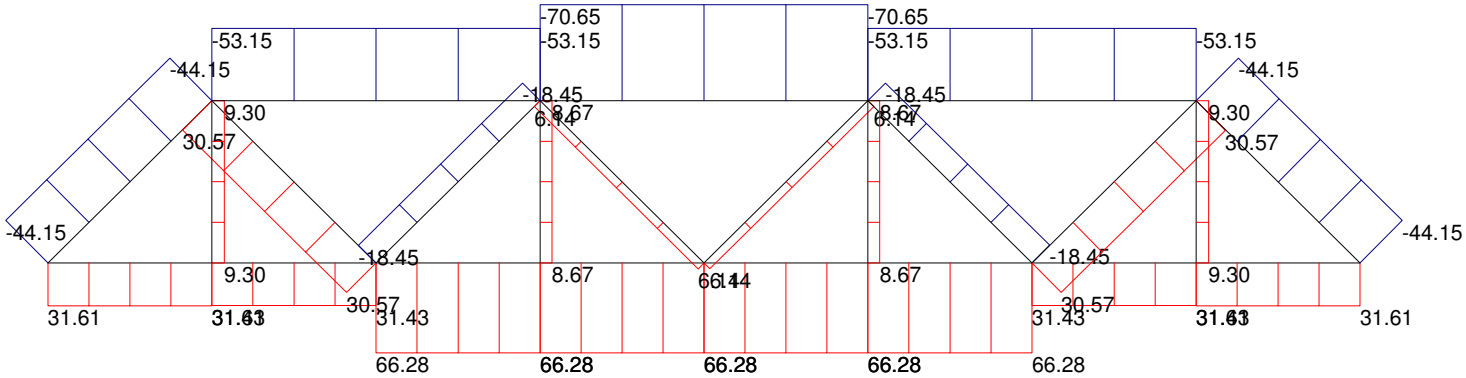

VT truss span 1, for Rating
Units: feet, kips

Reactions, Case: L+I M&V LANE

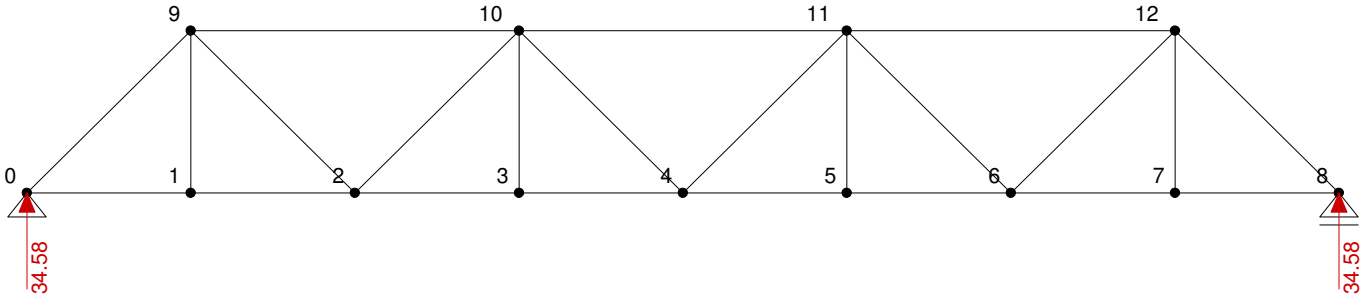

VT truss span 1, for Rating
Units: feet, kips

Axial Force Diagram, Case: DC DEAD LT

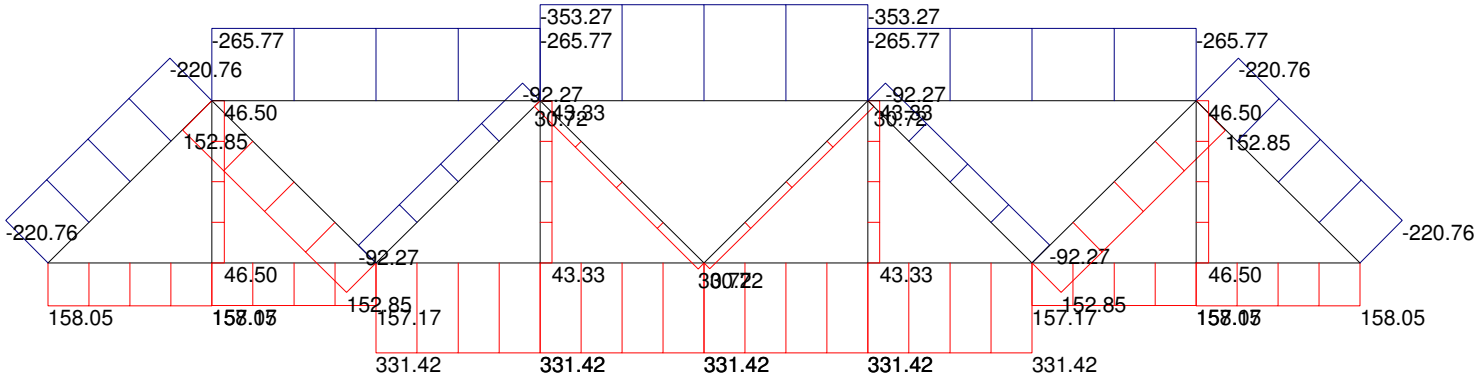

VT truss span 1, for Rating
Units: feet, kips

Reactions, Case: DC DEAD LT

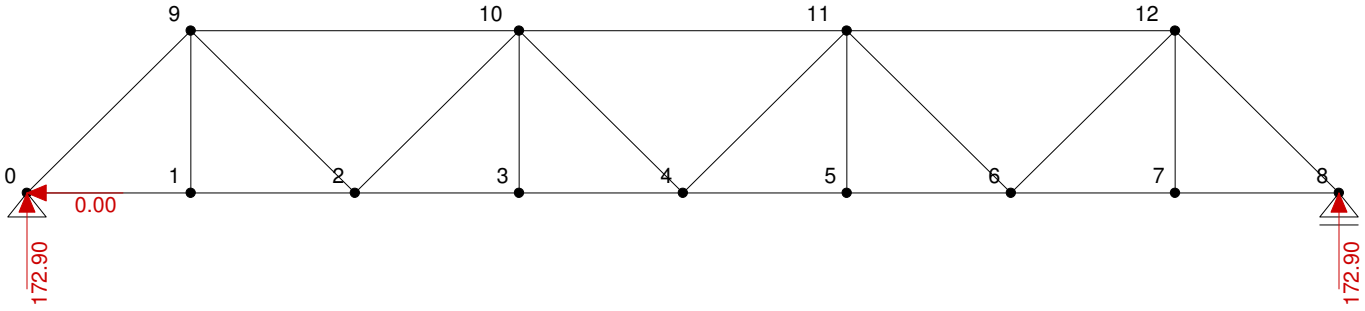

VT truss span 1, for Rating
Units: feet, kips

Axial Force Diagram, Case: UNIT DISTR DOWN -1.0 K/FT

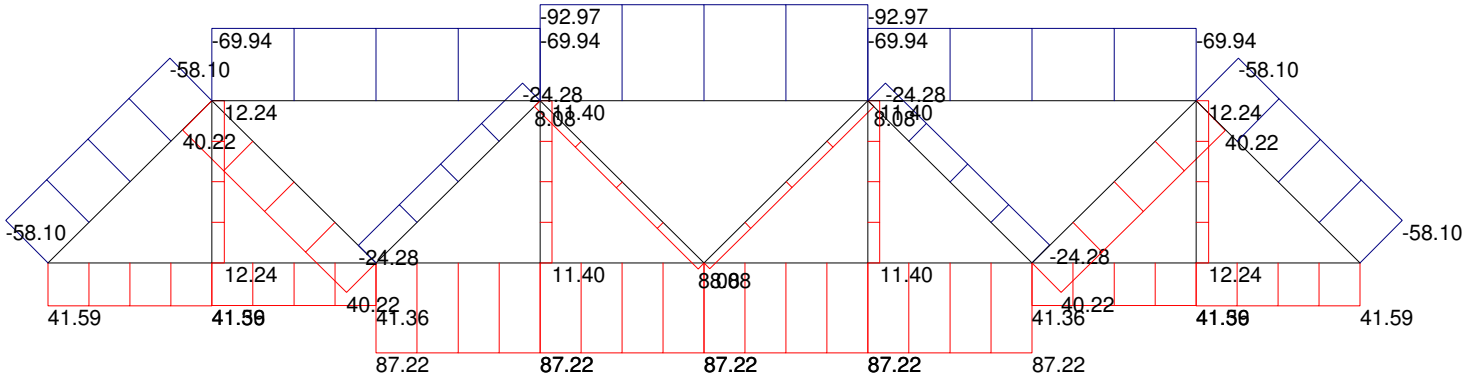

VT truss span 1, for Rating
Units: feet, kips

Reactions, Case: UNIT DISTR DOWN -1.0 K/FT

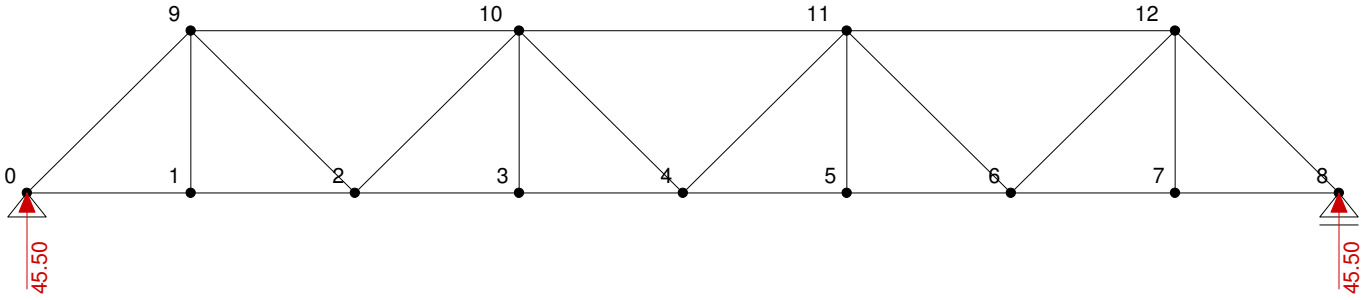

VT truss span 1, for Rating
Units: feet, kips

Axial Force Diagram, Case: UNIT POINT MIDSPAN UP +1.0 K

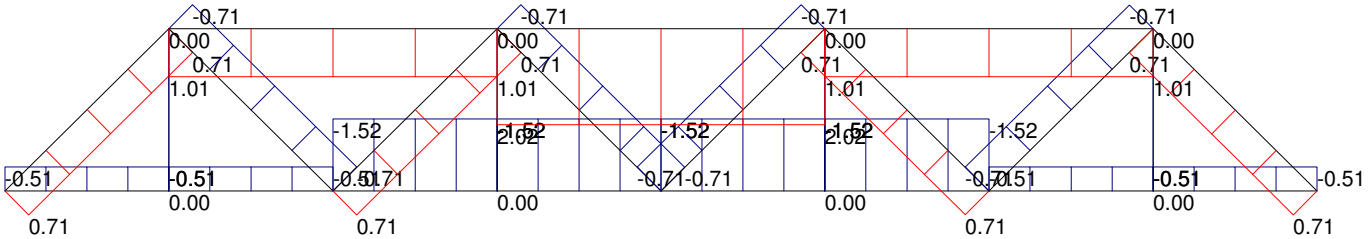

VT truss span 1, for Rating
Units: feet, kips

Reactions, Case: UNIT POINT MIDSPAN UP +1.0 K

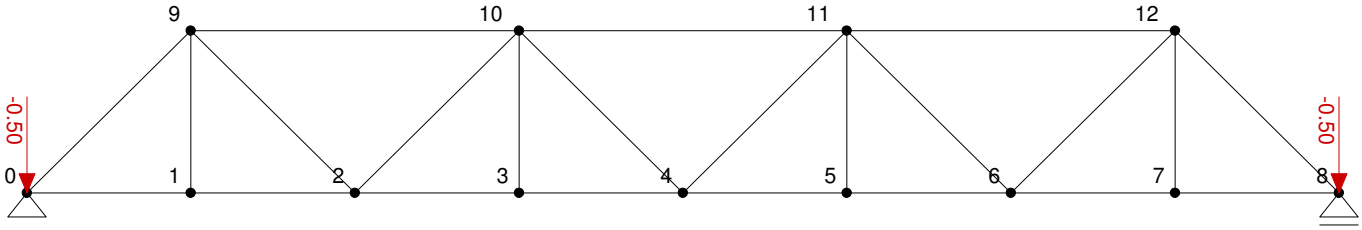

VT truss span 1, for Rating
Units: feet, kips

Axial Force Diagram, Case: UNIT POINT MIDSPAN DOWN -1.0 K

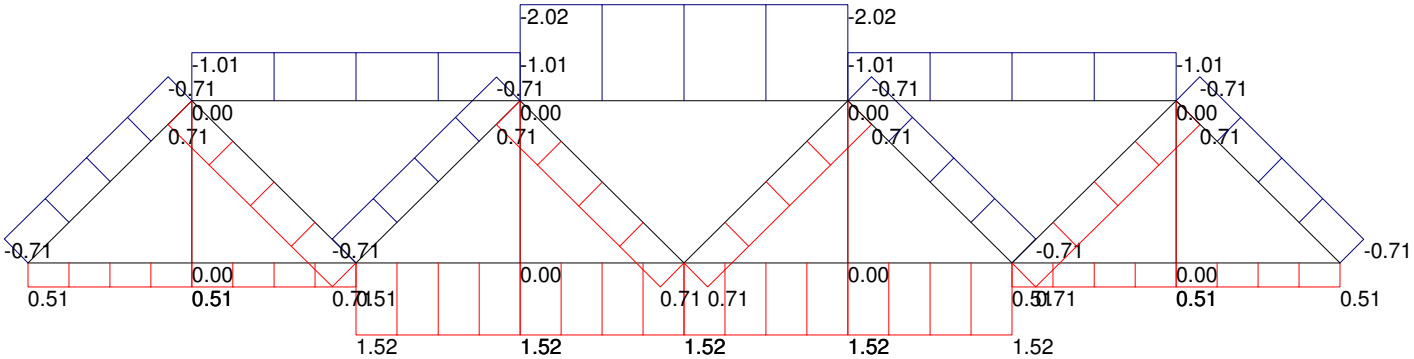

VT truss span 1, for Rating
Units: feet, kips

Reactions, Case: UNIT POINT MIDSPAN DOWN -1.0 K

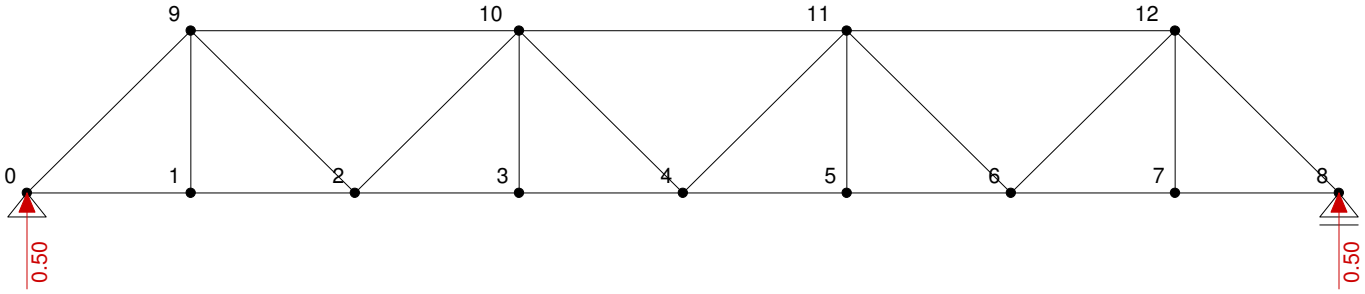

VT truss span 1, for Rating
Units: feet, kips

Axial Force Diagram, Comb: L+I MOMENT 3S2 ENV

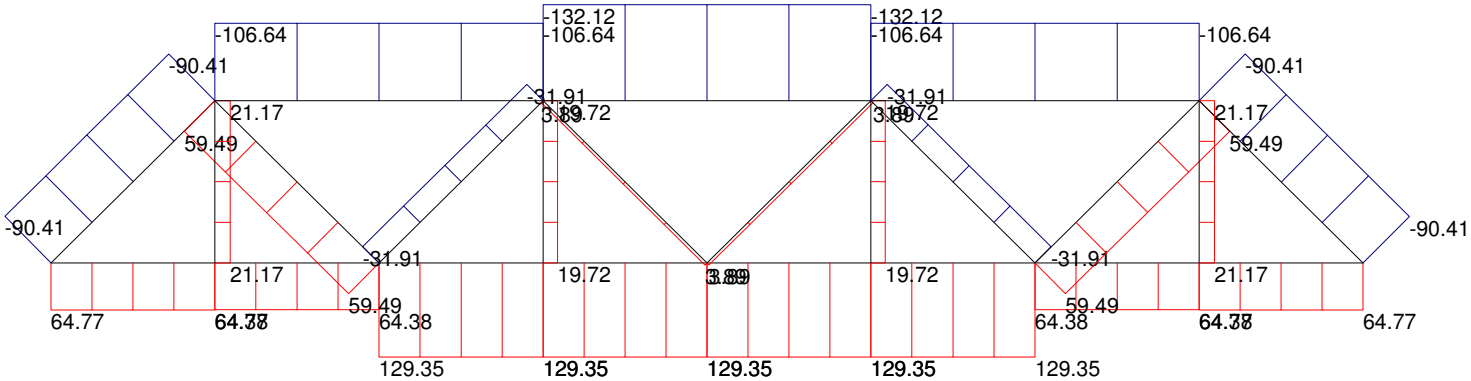

VT truss span 1, for Rating
Units: feet, kips

Reactions, Comb: L+I MOMENT 3S2 ENV

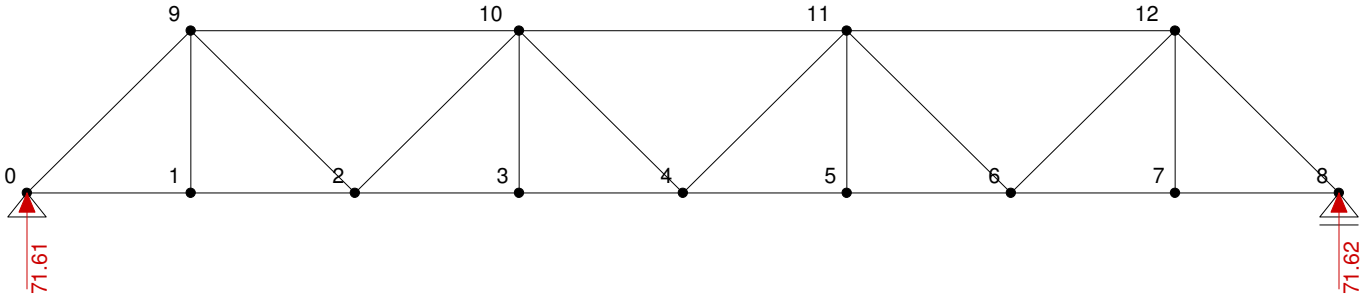

VT truss span 1, for Rating
Units: feet, kips

Axial Force Diagram, Comb: L+I SHEAR 3S2 ENV

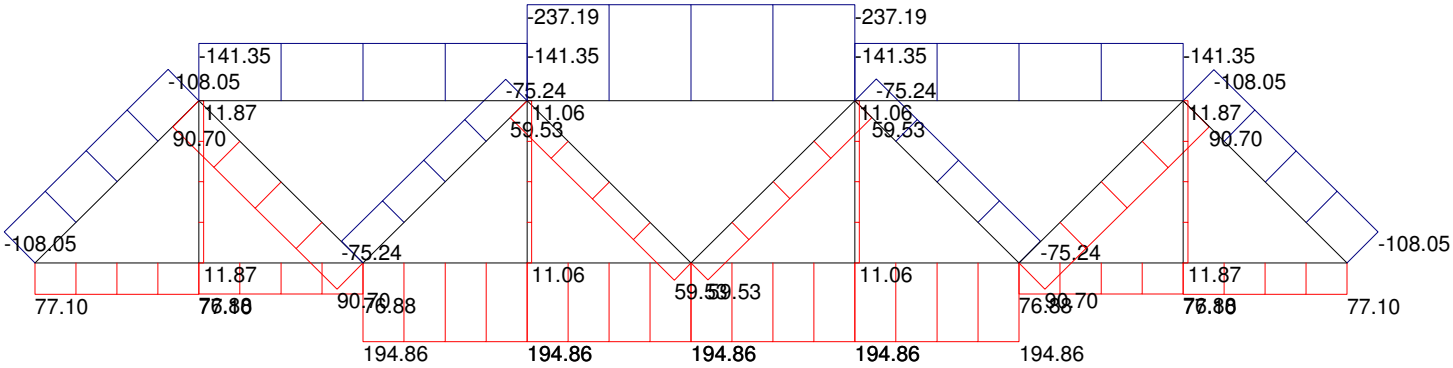

VT truss span 1, for Rating
Units: feet, kips

Reactions, Comb: L+I SHEAR 3S2 ENV

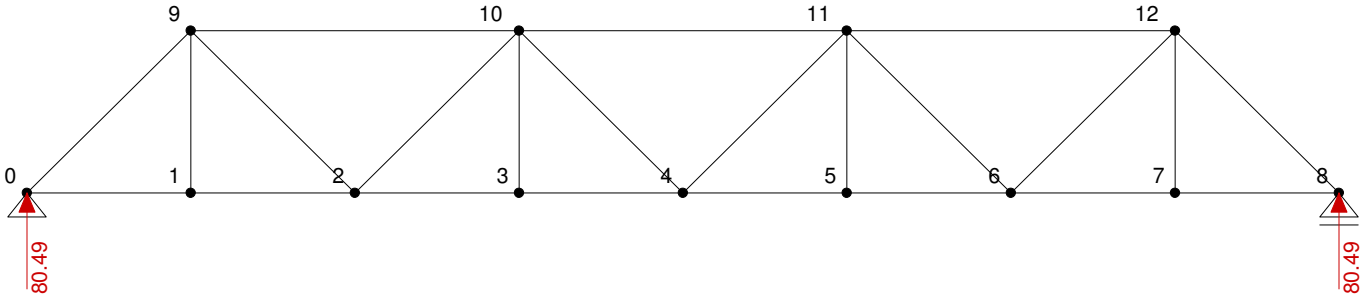

VT truss span 1, for Rating
Units: feet, kips

Axial Force Diagram, Comb: L+I MOMENT 6AXLE ENV

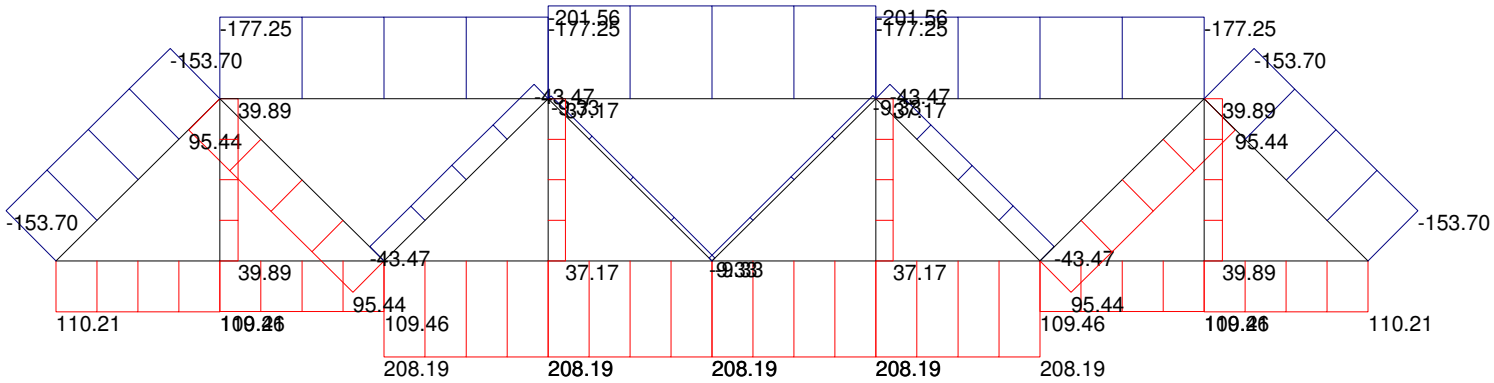

VT truss span 1, for Rating
Units: feet, kips

Reactions, Comb: L+I MOMENT 6AXLE ENV

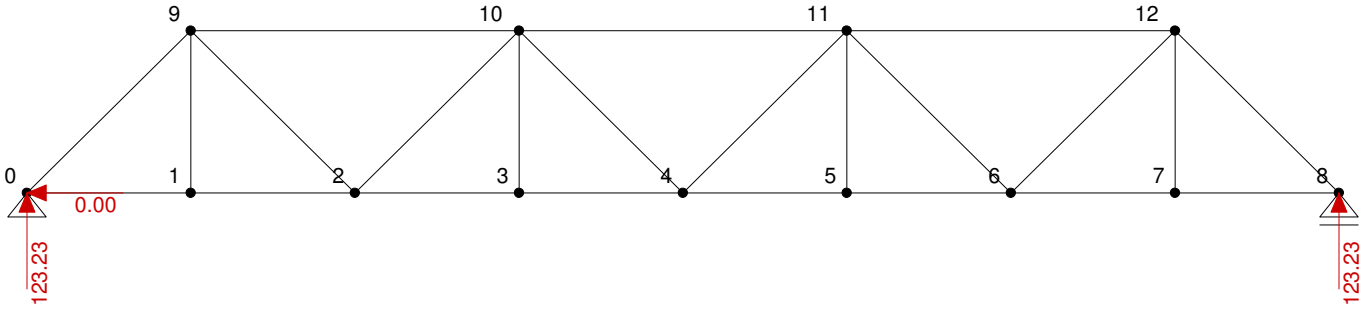

VT truss span 1, for Rating
Units: feet, kips

Axial Force Diagram, Comb: L+I SHEAR 6AXLE ENV

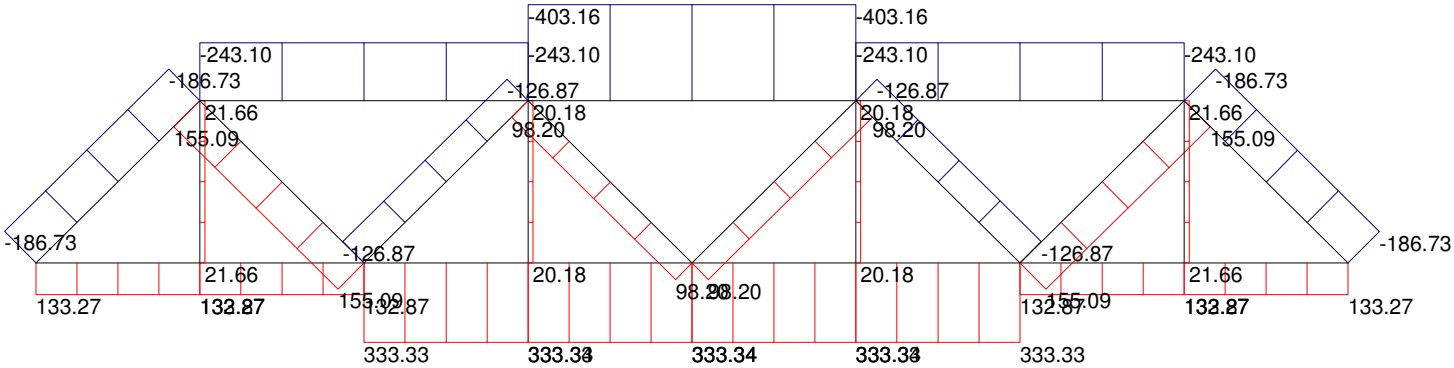

VT truss span 1, for Rating
Units: feet, kips

Reactions, Comb: L+I SHEAR 6AXLE ENV

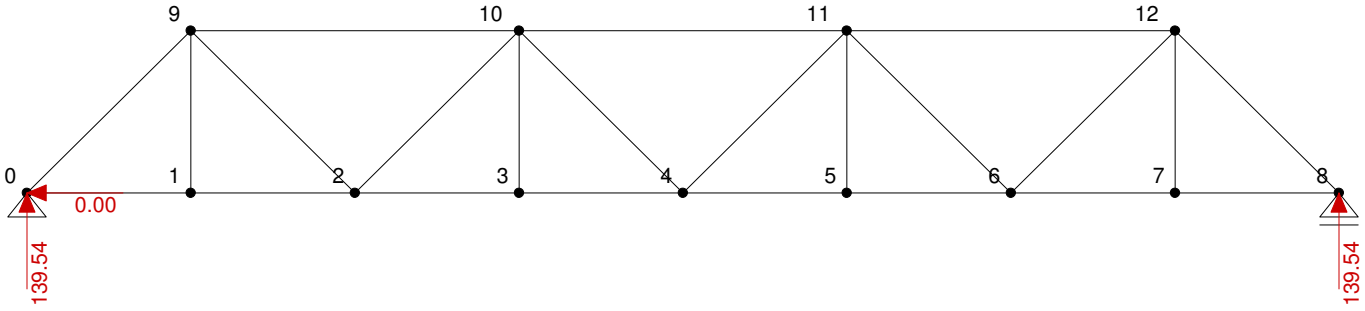

VT truss span 1, for Rating
Units: feet, kips

Axial Force Diagram, Comb: L+I MOMENT 3AXLE ENV

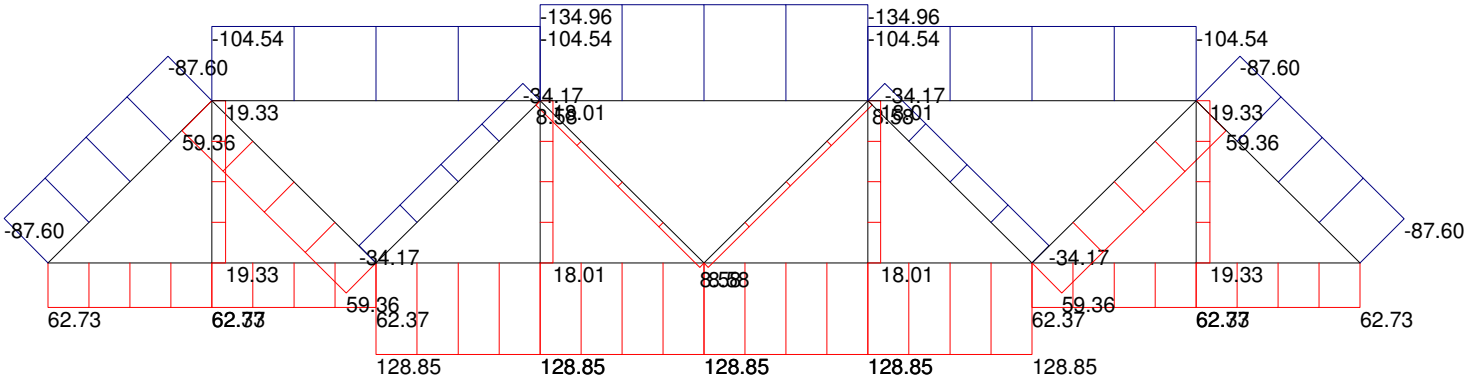

VT truss span 1, for Rating
Units: feet, kips

Reactions, Comb: L+I MOMENT 3AXLE ENV

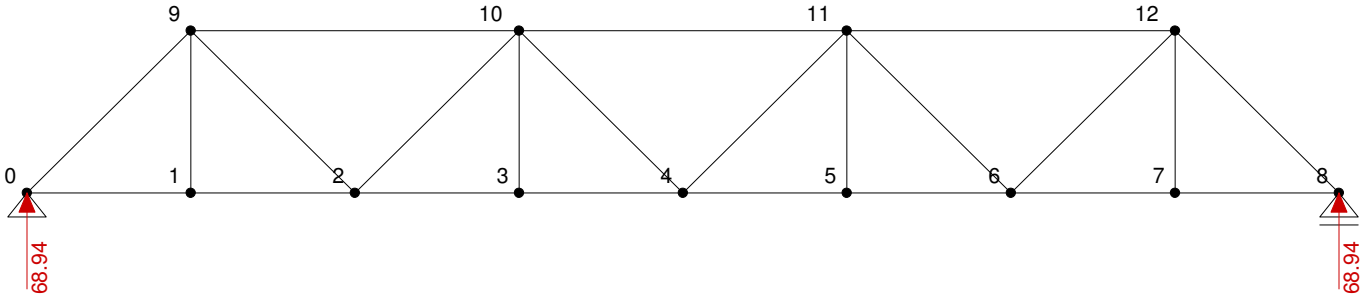

VT truss span 1, for Rating
Units: feet, kips

Axial Force Diagram, Comb: L+I SHEAR 3AXLE ENV

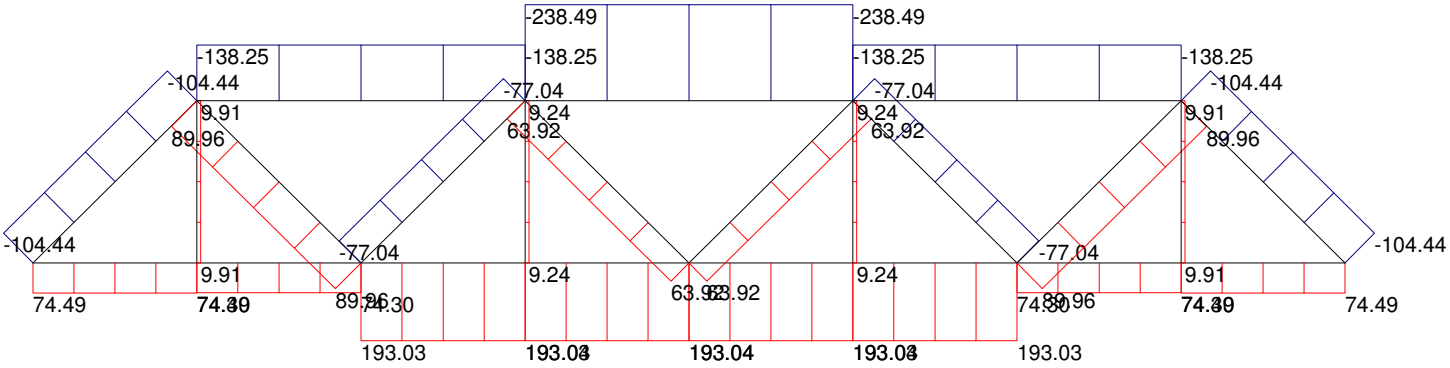

VT truss span 1, for Rating
Units: feet, kips

Reactions, Comb: L+I SHEAR 3AXLE ENV

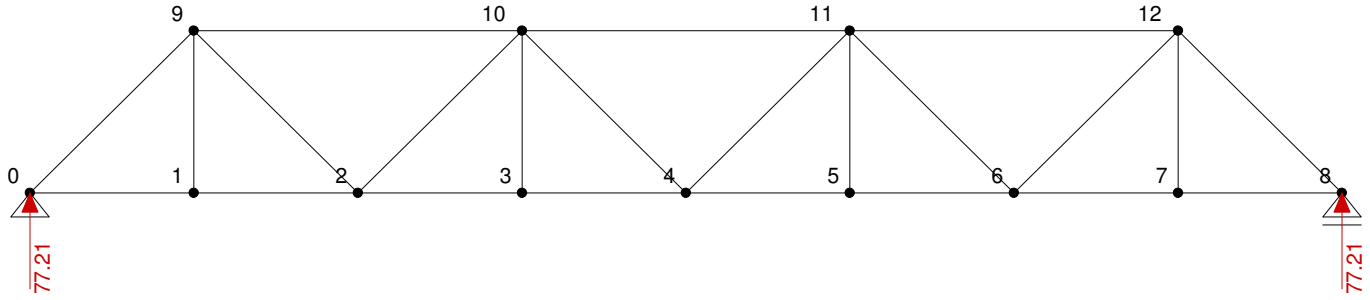

VT truss span 1, for Rating
Units: feet, kips

Axial Force Diagram, Comb: L+I MOMENT 4AXLE ENV

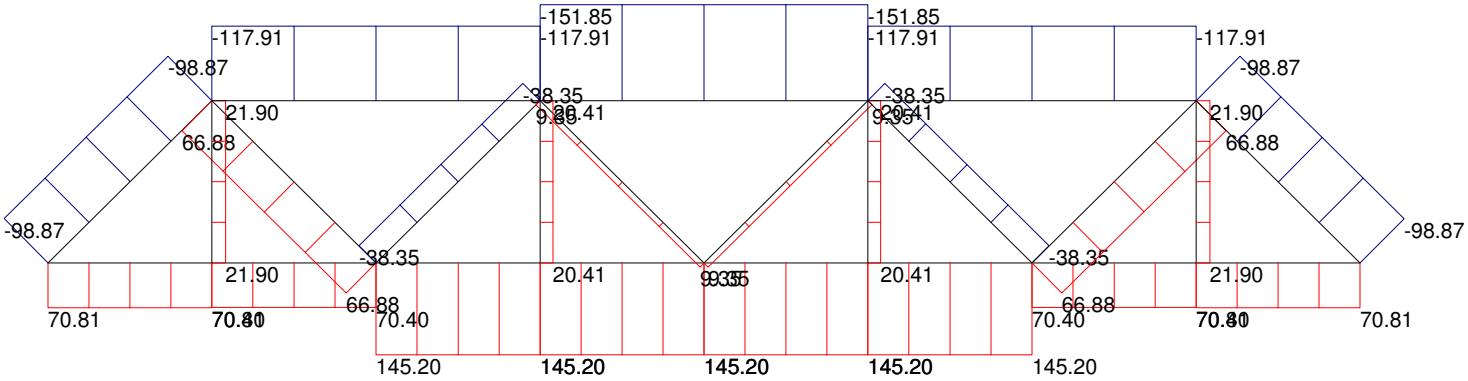

VT truss span 1, for Rating
Units: feet, kips

Reactions, Comb: L+I MOMENT 4AXLE ENV

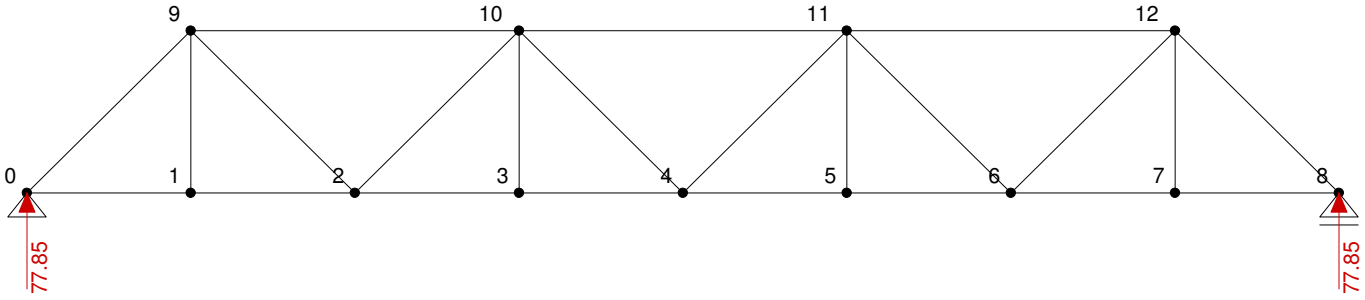

VT truss span 1, for Rating
Units: feet, kips

Axial Force Diagram, Comb: L+I SHEAR 4AXLE ENV

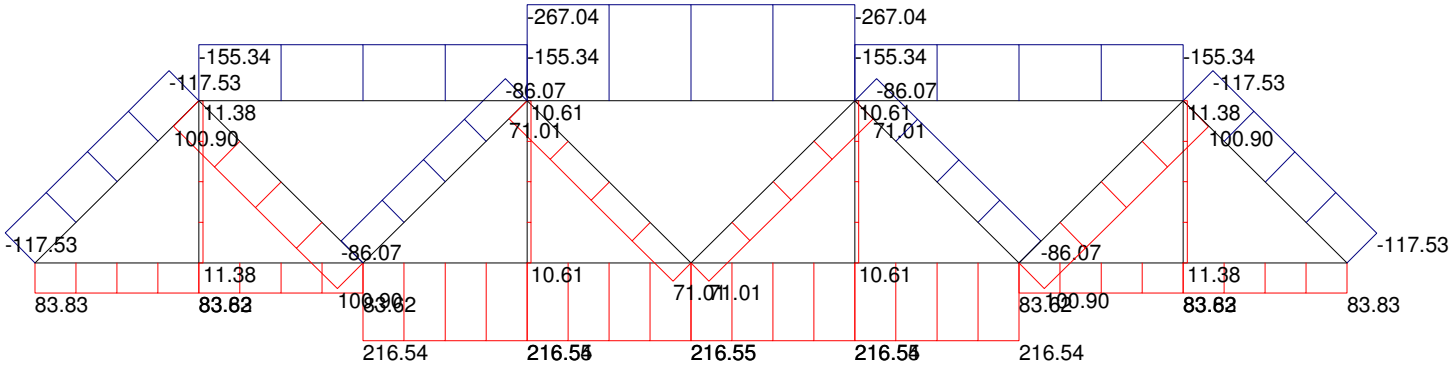

VT truss span 1, for Rating
Units: feet, kips

Reactions, Comb: L+I SHEAR 4AXLE ENV

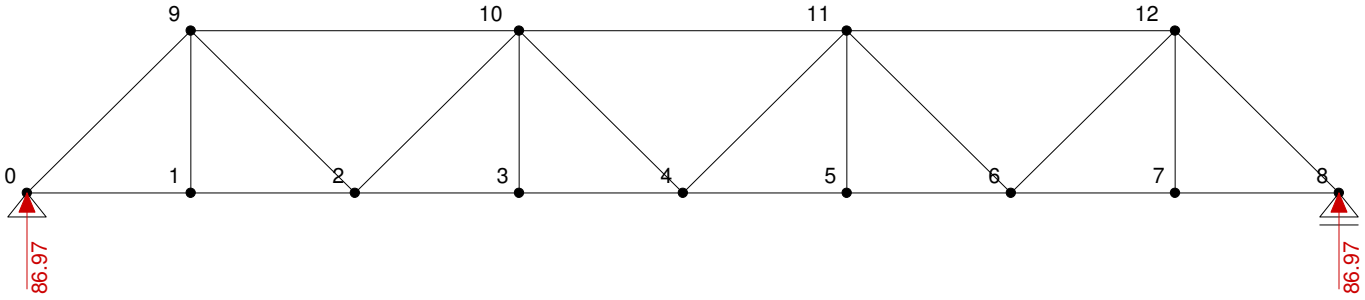

VT truss span 1, for Rating
Units: feet, kips

Axial Force Diagram, Comb: L+I MOMENT 5AXLE ENV

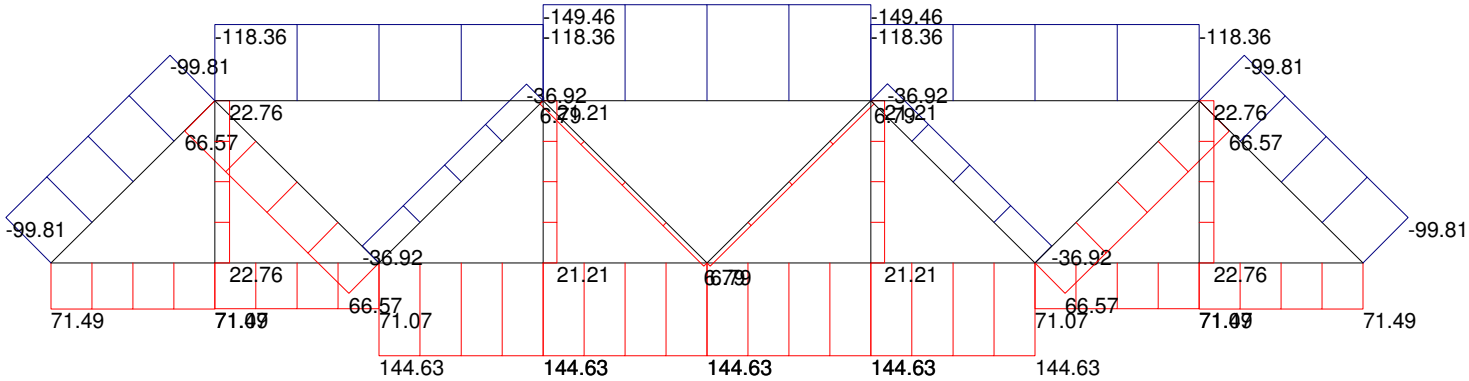

VT truss span 1, for Rating
Units: feet, kips

Reactions, Comb: L+I MOMENT 5AXLE ENV

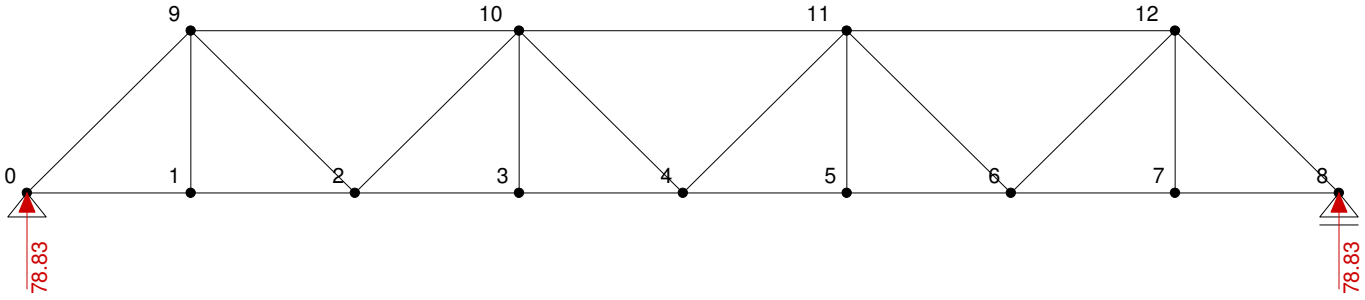

VT truss span 1, for Rating
Units: feet, kips

Axial Force Diagram, Comb: L+I SHEAR 5AXLE ENV

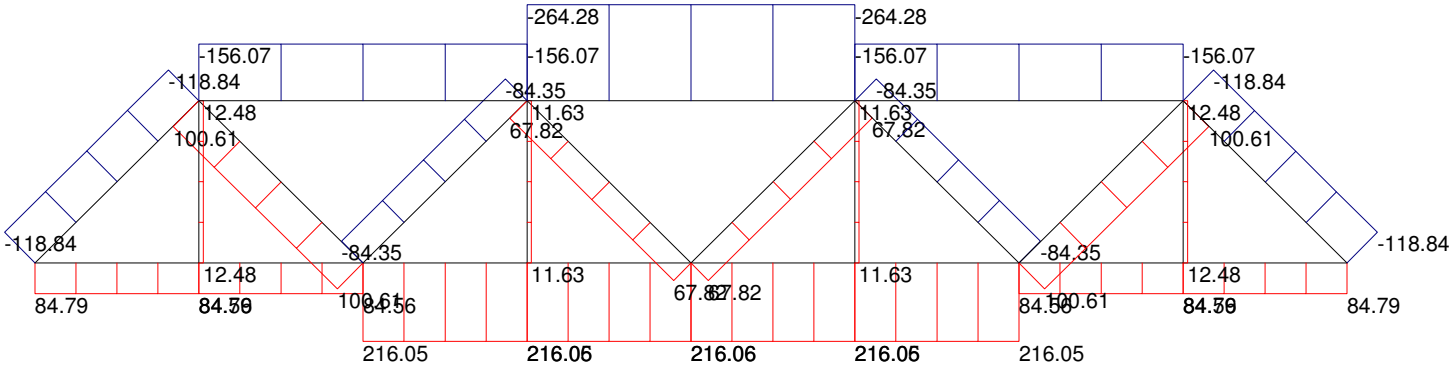

VT truss span 1, for Rating
Units: feet, kips

Reactions, Comb: L+I SHEAR 5AXLE ENV

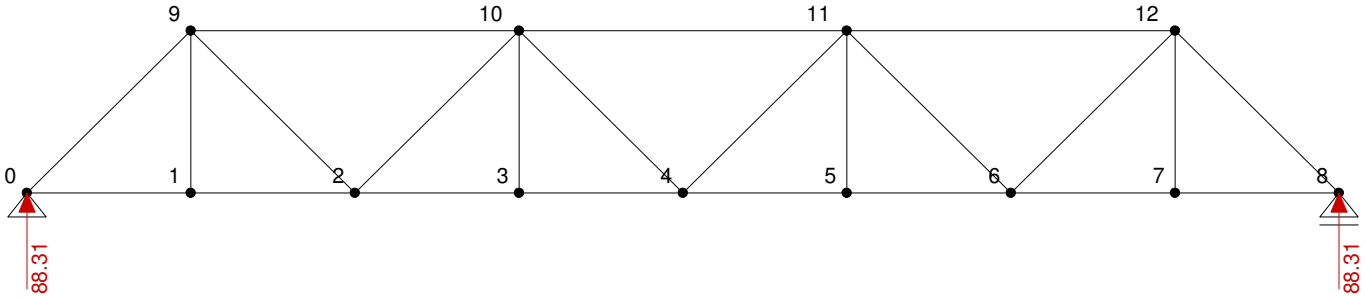

VT truss span 1, for Rating
Units: feet, kips

Axial Force Diagram, Comb: L+I MOMENT H20 ENV

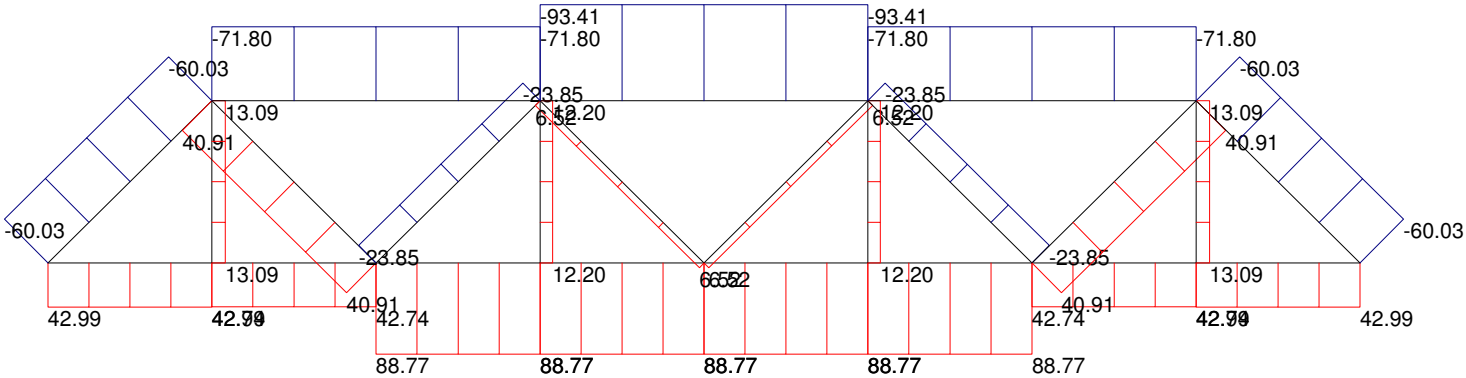

VT truss span 1, for Rating
Units: feet, kips

Reactions, Comb: L+I MOMENT H20 ENV

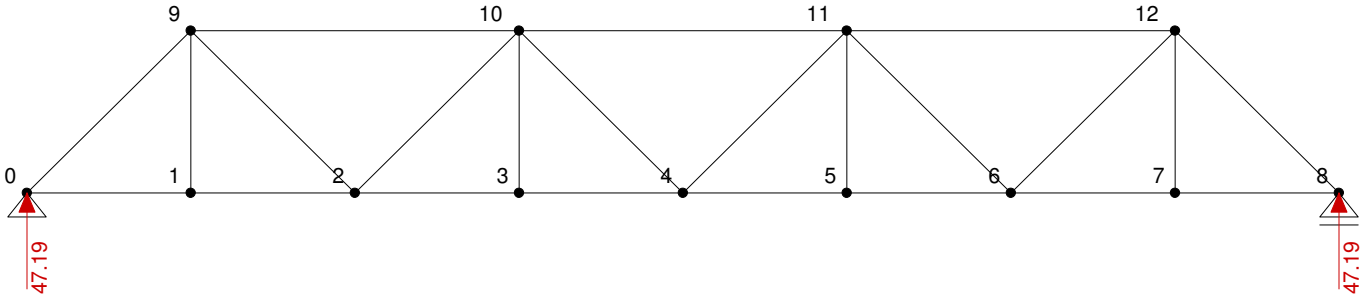

VT truss span 1, for Rating
Units: feet, kips

Axial Force Diagram, Comb: L+I SHEAR H20 ENV

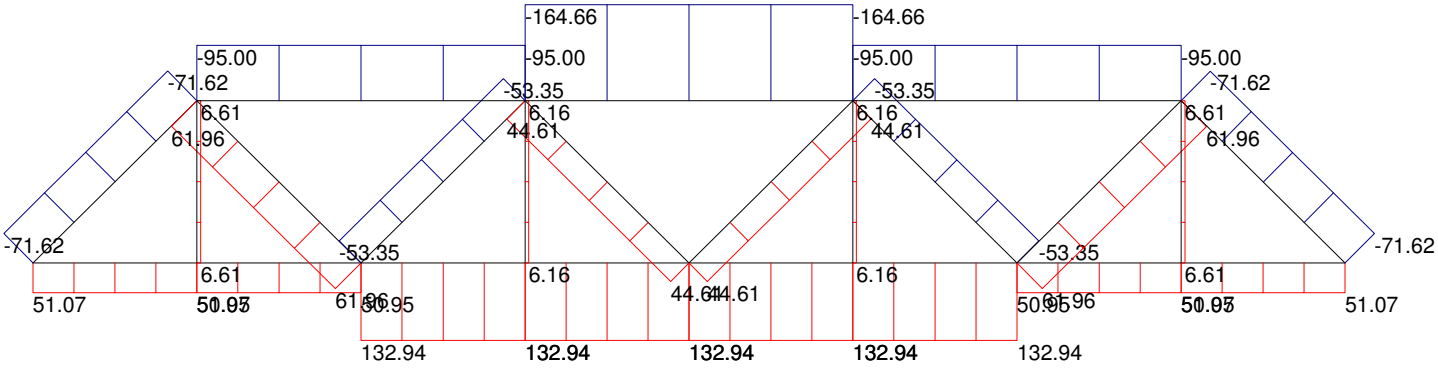

VT truss span 1, for Rating
Units: feet, kips

Reactions, Comb: L+I SHEAR H20 ENV

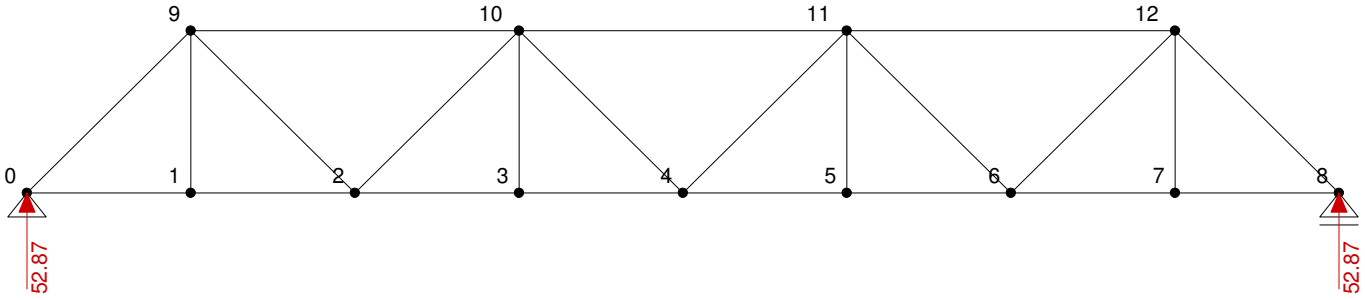

Rutland VT truss span 2, for Rating

LinPro 2.7.5
File: C:\Users\densfo_t\Documents\LinPro files\vt truss span 2 REV 6.aln
Units: kN-m

Input Data

Coordinates of joints/supports

Joint	X	Y	Rx	Ry	Rt	SPRING.X	SPRING.Y	SPRING.ROT	CS.ROT
0	0.000	0.000	1	1	0	0.00E+000	0.00E+000	0.00E+000	0.00
1	11.100	0.000	0	0	0	0.00E+000	0.00E+000	0.00E+000	0.00
2	22.200	0.000	0	0	0	0.00E+000	0.00E+000	0.00E+000	0.00
3	33.300	0.000	0	0	0	0.00E+000	0.00E+000	0.00E+000	0.00
4	44.400	0.000	0	0	0	0.00E+000	0.00E+000	0.00E+000	0.00
5	55.500	0.000	0	0	0	0.00E+000	0.00E+000	0.00E+000	0.00
6	66.600	0.000	0	0	0	0.00E+000	0.00E+000	0.00E+000	0.00
7	77.700	0.000	0	0	0	0.00E+000	0.00E+000	0.00E+000	0.00
8	88.800	0.000	0	0	0	0.00E+000	0.00E+000	0.00E+000	0.00
9	99.900	0.000	0	0	0	0.00E+000	0.00E+000	0.00E+000	0.00
10	111.000	0.000	0	1	0	0.00E+000	0.00E+000	0.00E+000	0.00
11	11.100	11.250	0	0	0	0.00E+000	0.00E+000	0.00E+000	0.00
12	33.300	11.250	0	0	0	0.00E+000	0.00E+000	0.00E+000	0.00
13	55.500	11.250	0	0	0	0.00E+000	0.00E+000	0.00E+000	0.00
14	77.700	11.250	0	0	0	0.00E+000	0.00E+000	0.00E+000	0.00
15	99.900	11.250	0	0	0	0.00E+000	0.00E+000	0.00E+000	0.00

Members

Member	Joint I	Joint J	Type	Releases
0:	0	1	BOT CHORD1	111111
1:	1	2	BOT CHORD1	111111
2:	2	3	BOT CHORD2	111111
3:	3	4	BOT CHORD2	111111
4:	4	5	BOT CHORD3	111111
5:	5	6	BOT CHORD3	111111
6:	6	7	BOT CHORD2	111111
7:	7	8	BOT CHORD2	111111
8:	8	9	BOT CHORD1	111111
9:	9	10	BOT CHORD1	111111
10:	0	11	END POST	111111
11:	11	2	DIAGONAL	111111
12:	2	12	DIAGONAL	111111
13:	12	4	DIAGONAL	111111
14:	4	13	DIAGONAL	111111
15:	13	6	DIAGONAL	111111
16:	6	14	DIAGONAL	111111
17:	14	8	DIAGONAL	111111
18:	8	15	DIAGONAL	111111
19:	15	10	END POST	111111
20:	1	11	VERTICAL	111111
21:	3	12	VERTICAL	111111
22:	5	13	VERTICAL	111111
23:	7	14	VERTICAL	111111
24:	9	15	VERTICAL	111111
25:	11	12	TOP CHORD1	111111
26:	12	13	TOP CHORD2	111111
27:	13	14	TOP CHORD2	111111
28:	14	15	TOP CHORD1	111111

Cross Sections

0: BOT CHORD1
A= 1.840E-01
I= 1.000E-04
E= 4176000.00
alpha= 1.2E-05

1: TOP CHORD1
A= 3.470E-01
I= 1.000E-04
E= 4176000.00
alpha= 1.2E-05

2: DIAGONAL
A= 1.240E-01
I= 1.000E-04
E= 4176000.00
alpha= 1.2E-05

3: VERTICAL
A= 1.490E-01

```
          I= 1.000E-04
          E= 4176000.00
          alpha= 1.2E-05

   4: BOT CHORD2
          A= 2.021E-01
          I= 1.000E-04
          E= 4176000.00
          alpha= 1.2E-05

   5: TOP CHORD2
          A= 4.700E-01
          I= 1.000E-04
          E= 4176000.00
          alpha= 1.2E-05

   6: END POST
          A= 1.840E-01
          I= 1.000E-04
          E= 4176000.00
          alpha= 1.2E-05

   7: BOT CHORD3
          A= 2.451E-01
          I= 1.000E-04
          E= 4176000.00
          alpha= 1.2E-05



Load
   0: Distributed Load
          Load Case: DC1  STEEL WT
          Load Name: Distributed
          Coordinate System: Global Y
          a= 0.00
          b= 1.00  On Member
          p1= -1.35
          p2= -1.35

   1: Distributed Load
          Load Case: DC2  DECK
          Load Name: Distributed
          Coordinate System: Global Y
          a= 0.00
          b= 1.00  On Member
          p1= -1.95
          p2= -1.95

   2: Distributed Load
          Load Case: DC3  SDL LT
          Load Name: Distributed
          Coordinate System: Global Y
          a= 0.00
          b= 1.00  On Member
          p1= -1.10
          p2= -1.10

   3: Distributed Load
          Load Case: DW  FWS UTIL
          Load Name: Distributed
          Coordinate System: Global Y
          a= 0.00
          b= 1.00  On Member
          p1= -0.60
          p2= -0.60

   4: Distributed Load
          Load Case: blank
          Load Name: Distributed
          Coordinate System: Global Y
          a= 0.00
          b= 1.00  On Member
          p1= -1.30
          p2= -1.30

   5: Distributed Load
          Load Case: DC3  SDL RT
          Load Name: Distributed
          Coordinate System: Global Y
          a= 0.00
          b= 1.00  On Member
```

```
        p1= -0.20
        p2= -0.20

6: Distributed Load
        Load Case: L+I  MOMENT TRUCK ENV
        Load Name: Distributed
        Coordinate System: Global Y
        a= 0.00
        b= 1.00  On Member
        p1= -1.97
        p2= -1.97

7: Distributed Load
        Load Case: L+I  SHEAR TRUCK ENV
        Load Name: Distributed
        Coordinate System: Global Y
        a= 0.00
        b= 1.00  On Member
        p1= -1.02
        p2= -1.02

8: Distributed Load
        Load Case: L+I M&V LANE
        Load Name: Distributed
        Coordinate System: Global Y
        a= 0.00
        b= 1.00  On Member
        p1= -0.76
        p2= -0.76

9: Distributed Load
        Load Case: DC  DEAD LT
        Load Name: Distributed
        Coordinate System: Global Y
        a= 0.00
        b= 1.00  On Member
        p1= -4.10
        p2= -4.10

10: Point Load
        Load Case: L+I  MOMENT TRUCK ENV
        Load Name: Point
        Coordinate System: Global
        a= 0.00  Absolute from Joint I
        Force X= 0.00
        Force Y= 12.10
        Moment M= 0.00

11: Point Load
        Load Case: L+I  SHEAR TRUCK ENV
        Load Name: Point
        Coordinate System: Global
        a= 0.00  Absolute from Joint I
        Force X= 0.00
        Force Y= -94.00
        Moment M= 0.00

12: Point Load
        Load Case: FATIGUE MOMENT ENV
        Load Name: Point
        Coordinate System: Global
        a= 0.00  Absolute from Joint I
        Force X= 0.00
        Force Y= -21.40
        Moment M= 0.00

13: Point Load
        Load Case: FATIGUE MOMENT ENV
        Load Name: Point
        Coordinate System: Global
        a= 0.00  Absolute from Joint I
        Force X= 0.00
        Force Y= 21.40
        Moment M= 0.00

14: Point Load
        Load Case: FATIGUE SHEAR ENV
        Load Name: Point
        Coordinate System: Global
        a= 0.00  Absolute from Joint I
        Force X= 0.00
        Force Y= -75.90
```

```
        Moment M= 0.00

15: Distributed Load
        Load Case: FATIGUE MOMENT ENV
        Load Name: Distributed
        Coordinate System: Global Y
        a= 0.00
        b= 1.00  On Member
        p1= -1.88
        p2= -1.88

16: Distributed Load
        Load Case: FATIGUE SHEAR ENV
        Load Name: Distributed
        Coordinate System: Global Y
        a= 0.00
        b= 1.00  On Member
        p1= -1.02
        p2= -1.02

17: Distributed Load
        Load Case: FATIGUE MOMENT ENV
        Load Name: Distributed
        Coordinate System: Global Y
        a= 0.00
        b= 1.00  On Member
        p1= -1.62
        p2= -1.62

18: Distributed Load
        Load Case: FATIGUE SHEAR ENV
        Load Name: Distributed
        Coordinate System: Global Y
        a= 0.00
        b= 1.00  On Member
        p1= -0.88
        p2= -0.88

19: Point Load
        Load Case: FATIGUE MOMENT ENV
        Load Name: Point
        Coordinate System: Global
        a= 0.00  Absolute from Joint I
        Force X= 0.00
        Force Y= 18.50
        Moment M= 0.00

20: Point Load
        Load Case: FATIGUE SHEAR ENV
        Load Name: Point
        Coordinate System: Global
        a= 0.00  Absolute from Joint I
        Force X= 0.00
        Force Y= -65.60
        Moment M= 0.00

21: Distributed Load
        Load Case: DC1  STEEL WT
        Load Name: Distributed
        Coordinate System: Global Y
        a= 0.00
        b= 1.00  On Member
        p1= -1.10
        p2= -1.10

22: Distributed Load
        Load Case: DC3  SDL LT
        Load Name: Distributed
        Coordinate System: Global Y
        a= 0.00
        b= 1.00  On Member
        p1= -1.05
        p2= -1.05

23: Distributed Load
        Load Case: blank
        Load Name: Distributed
        Coordinate System: Global Y
        a= 0.00
        b= 1.00  On Member
        p1= -1.10
        p2= -1.10
```

```
24: Distributed Load
        Load Case: FATIGUE MOMENT ENV
        Load Name: Distributed
        Coordinate System: Global Y
        a= 0.00
        b= 1.00  On Member
        p1= -1.06
        p2= -1.06

25: Distributed Load
        Load Case: FATIGUE SHEAR ENV
        Load Name: Distributed
        Coordinate System: Global Y
        a= 0.00
        b= 1.00  On Member
        p1= -0.57
        p2= -0.57

26: Point Load
        Load Case: FATIGUE MOMENT ENV
        Load Name: Point
        Coordinate System: Global
        a= 0.00  Absolute from Joint I
        Force X= 0.00
        Force Y= 12.10
        Moment M= 0.00

27: Point Load
        Load Case: FATIGUE SHEAR ENV
        Load Name: Point
        Coordinate System: Global
        a= 0.00  Absolute from Joint I
        Force X= 0.00
        Force Y= -42.80
        Moment M= 0.00

28: Distributed Load
        Load Case: blank
        Load Name: Distributed
        Coordinate System: Global Y
        a= 0.00
        b= 1.00  On Member
        p1= 0.00
        p2= 0.00

29: Distributed Load
        Load Case: blank
        Load Name:
        Coordinate System: Global Y
        a= 0.00
        b= 1.00  On Member
        p1= 0.00
        p2= 0.00

30: Distributed Load
        Load Case: blank
        Load Name: Distributed2
        Coordinate System: Global Y
        a= 0.00
        b= 1.00  On Member
        p1= 0.00
        p2= 0.00

31: Distributed Load
        Load Case: L+I MOMENT 3S2 ENV
        Load Name: Distributed
        Coordinate System: Global Y
        a= 0.00
        b= 1.00  On Member
        p1= -1.73
        p2= -1.73

32: Distributed Load
        Load Case: L+I SHEAR 3S2 ENV
        Load Name: Distributed
        Coordinate System: Global Y
        a= 0.00
        b= 1.00  On Member
        p1= -0.97
        p2= -0.97
```

```
33: Distributed Load
        Load Case: L+I MOMENT 6AXLE ENV
        Load Name: Distributed
        Coordinate System: Global Y
        a= 0.00
        b= 1.00  On Member
        p1= -3.26
        p2= -3.26

34: Distributed Load
        Load Case: L+I SHEAR 6AXLE ENV
        Load Name: Distributed
        Coordinate System: Global Y
        a= 0.00
        b= 1.00  On Member
        p1= -1.77
        p2= -1.77

35: Distributed Load
        Load Case: L+I MOMENT 3AXLE ENV
        Load Name: Distributed
        Coordinate System: Global Y
        a= 0.00
        b= 1.00  On Member
        p1= -1.58
        p2= -1.58

36: Distributed Load
        Load Case: L+I SHEAR 3AXLE ENV
        Load Name: Distributed
        Coordinate System: Global Y
        a= 0.00
        b= 1.00  On Member
        p1= -0.81
        p2= -0.81

37: Distributed Load
        Load Case: L+I MOMENT 4AXLE ENV
        Load Name: Distributed
        Coordinate System: Global Y
        a= 0.00
        b= 1.00  On Member
        p1= -1.79
        p2= -1.79

38: Distributed Load
        Load Case: L+I SHEAR 4AXLE ENV
        Load Name: Distributed
        Coordinate System: Global Y
        a= 0.00
        b= 1.00  On Member
        p1= -0.93
        p2= -0.93

39: Distributed Load
        Load Case: L+I MOMENT 5AXLE ENV
        Load Name: Distributed
        Coordinate System: Global Y
        a= 0.00
        b= 1.00  On Member
        p1= -1.86
        p2= -1.86

40: Distributed Load
        Load Case: L+I SHEAR 5AXLE ENV
        Load Name: Distributed
        Coordinate System: Global Y
        a= 0.00
        b= 1.00  On Member
        p1= -1.02
        p2= -1.02

41: Distributed Load
        Load Case: L+I MOMENT H20 ENV
        Load Name: Distributed
        Coordinate System: Global Y
        a= 0.00
        b= 1.00  On Member
        p1= -1.07
        p2= -1.07

42: Distributed Load
```

```
        Load Case: L+I SHEAR H20 ENV
        Load Name: Distributed
        Coordinate System: Global Y
        a= 0.00
        b= 1.00  On Member
        p1= -0.54
        p2= -0.54

43: Point Load
        Load Case: L+I MOMENT 3S2 ENV
        Load Name: Point
        Coordinate System: Global
        a= 0.00  Absolute from Joint I
        Force X= 0.00
        Force Y= 14.20
        Moment M= 0.00

44: Point Load
        Load Case: L+I SHEAR 3S2 ENV
        Load Name: Point
        Coordinate System: Global
        a= 0.00  Absolute from Joint I
        Force X= 0.00
        Force Y= -72.70
        Moment M= 0.00

45: Point Load
        Load Case: L+I MOMENT 6AXLE ENV
        Load Name: Point
        Coordinate System: Global
        a= 0.00  Absolute from Joint I
        Force X= 0.00
        Force Y= 50.20
        Moment M= 0.00

46: Point Load
        Load Case: L+I SHEAR 6AXLE ENV
        Load Name: Point
        Coordinate System: Global
        a= 0.00  Absolute from Joint I
        Force X= 0.00
        Force Y= -118.00
        Moment M= 0.00

47: Point Load
        Load Case: L+I MOMENT 3AXLE ENV
        Load Name: Point
        Coordinate System: Global
        a= 0.00  Absolute from Joint I
        Force X= 0.00
        Force Y= 5.90
        Moment M= 0.00

48: Point Load
        Load Case: L+I SHEAR 3AXLE ENV
        Load Name: Point
        Coordinate System: Global
        a= 0.00  Absolute from Joint I
        Force X= 0.00
        Force Y= -80.70
        Moment M= 0.00

49: Point Load
        Load Case: L+I MOMENT 4AXLE ENV
        Load Name: Point
        Coordinate System: Global
        a= 0.00  Absolute from Joint I
        Force X= 0.00
        Force Y= 7.20
        Moment M= 0.00

50: Point Load
        Load Case: L+I SHEAR 4AXLE ENV
        Load Name: Point
        Coordinate System: Global
        a= 0.00  Absolute from Joint I
        Force X= 0.00
        Force Y= -89.30
        Moment M= 0.00

51: Point Load
        Load Case: L+I MOMENT 5AXLE ENV
```

```
          Load Name: Point
          Coordinate System: Global
          a= 0.00  Absolute from Joint I
          Force X= 0.00
          Force Y= 11.60
          Moment M= 0.00

   52: Point Load
          Load Case: L+I SHEAR 5AXLE ENV
          Load Name: Point
          Coordinate System: Global
          a= 0.00  Absolute from Joint I
          Force X= 0.00
          Force Y= -83.80
          Moment M= 0.00

   53: Point Load
          Load Case: L+I MOMENT H20 ENV
          Load Name: Point
          Coordinate System: Global
          a= 0.00  Absolute from Joint I
          Force X= 0.00
          Force Y= 3.00
          Moment M= 0.00

   54: Point Load
          Load Case: L+I SHEAR H20 ENV
          Load Name: Point
          Coordinate System: Global
          a= 0.00  Absolute from Joint I
          Force X= 0.00
          Force Y= -56.60
          Moment M= 0.00

Load Applied on Joints
   Joint   Applied Loads
   5:      10, 11, 26, 27, 43, 44, 45, 46, 47, 48, 49, 50, 51, 52, 53, 54


Load Applied on Members
   Member  Applied Loads
   0:      1, 3, 5, 6, 7, 8, 9, 21, 22, 24, 25, 31, 32, 33, 34, 35, 36, 37, 38, 39, 40, 41, 42
   1:      1, 3, 5, 6, 7, 8, 9, 21, 22, 24, 25, 31, 32, 33, 34, 35, 36, 37, 38, 39, 40, 41, 42
   2:      1, 3, 5, 6, 7, 8, 9, 21, 22, 24, 25, 31, 32, 33, 34, 35, 36, 37, 38, 39, 40, 41, 42
   3:      1, 3, 5, 6, 7, 8, 9, 21, 22, 24, 25, 31, 32, 33, 34, 35, 36, 37, 38, 39, 40, 41, 42
   4:      1, 3, 5, 6, 7, 8, 9, 21, 22, 24, 25, 31, 32, 33, 34, 35, 36, 37, 38, 39, 40, 41, 42
   5:      1, 3, 5, 6, 7, 8, 9, 21, 22, 24, 25, 31, 32, 33, 34, 35, 36, 37, 38, 39, 40, 41, 42
   6:      1, 3, 5, 6, 7, 8, 9, 21, 22, 24, 25, 31, 32, 33, 34, 35, 36, 37, 38, 39, 40, 41, 42
   7:      1, 3, 5, 6, 7, 8, 9, 21, 22, 24, 25, 31, 32, 33, 34, 35, 36, 37, 38, 39, 40, 41, 42
   8:      1, 3, 5, 6, 7, 8, 9, 21, 22, 24, 25, 31, 32, 33, 34, 35, 36, 37, 38, 39, 40, 41, 42
   9:      1, 3, 5, 6, 7, 8, 9, 21, 22, 24, 25, 31, 32, 33, 34, 35, 36, 37, 38, 39, 40, 41, 42


Load Cases
   0: DC1  STEEL WT
   1: DC2  DECK
   2: DC3  SDL LT
   3: DW  FWS UTIL
   4: L+I  MOMENT TRUCK ENV
   5: L+I  SHEAR TRUCK ENV
   6: L+I M&V LANE
   7: blank
   8: DC3  SDL RT
   9: DC  DEAD LT
   10: FATIGUE MOMENT ENV
   11: FATIGUE SHEAR ENV
   12: L+I MOMENT 3S2 ENV
   13: L+I SHEAR 3S2 ENV
   14: L+I MOMENT 6AXLE ENV
   15: L+I SHEAR 6AXLE ENV
   16: L+I MOMENT 3AXLE ENV
   17: L+I SHEAR 3AXLE ENV
   18: L+I MOMENT 4AXLE ENV
   19: L+I SHEAR 4AXLE ENV
   20: L+I MOMENT 5AXLE ENV
   21: L+I SHEAR 5AXLE ENV
   22: L+I MOMENT H20 ENV
   23: L+I SHEAR H20 ENV


Load Combinations
   0: SVC I DEAD DEFL LT = 1.00xDC1  STEEL WT + 1.00xDC2  DECK + 1.00xDC3  SDL LT + 1.00xDW  FWS UTIL + 0.00xL+I  MOME
```

Rutland VT truss span 2, for Rating

```
M&V LANE + 0.00xblank + 0.00xDC3  SDL RT + 0.00xDC  DEAD LT + 0.00xFATIGUE MOMENT ENV + 0.00xFATIGUE SHEAR ENV + 0.00x
MOMENT 6AXLE ENV + 0.00xL+I SHEAR 6AXLE ENV + 0.00xL+I MOMENT 3AXLE ENV + 0.00xL+I SHEAR 3AXLE ENV + 0.00xL+I MOMENT 4
MOMENT 5AXLE ENV + 0.00xL+I SHEAR 5AXLE ENV + 0.00xL+I MOMENT H20 ENV + 0.00xL+I SHEAR H20 ENV
   1: SCV I DEAD DEFL RT = 1.00xDC1  STEEL WT + 1.00xDC2  DECK + 0.00xDC3  SDL LT + 1.00xDW  FWS UTIL + 0.00xL+I  MOME
M&V LANE + 0.00xblank + 1.00xDC3  SDL RT + 0.00xDC  DEAD LT + 0.00xFATIGUE MOMENT ENV + 0.00xFATIGUE SHEAR ENV + 0.00x
MOMENT 6AXLE ENV + 0.00xL+I SHEAR 6AXLE ENV + 0.00xL+I MOMENT 3AXLE ENV + 0.00xL+I SHEAR 3AXLE ENV + 0.00xL+I MOMENT 4
MOMENT 5AXLE ENV + 0.00xL+I SHEAR 5AXLE ENV + 0.00xL+I MOMENT H20 ENV + 0.00xL+I SHEAR H20 ENV
   2: STRI MOMENT = 0.00xDC1  STEEL WT + 0.00xDC2  DECK + 0.00xDC3  SDL LT + 1.50xDW  FWS UTIL + 1.75xL+I  MOMENT TRUC
LANE + 0.00xblank + 0.00xDC3  SDL RT + 1.25xDC  DEAD LT + 0.00xFATIGUE MOMENT ENV + 0.00xFATIGUE SHEAR ENV + 0.00xL+I
MOMENT 6AXLE ENV + 0.00xL+I SHEAR 6AXLE ENV + 0.00xL+I MOMENT 3AXLE ENV + 0.00xL+I SHEAR 3AXLE ENV + 0.00xL+I MOMENT 4
MOMENT 5AXLE ENV + 0.00xL+I SHEAR 5AXLE ENV + 0.00xL+I MOMENT H20 ENV + 0.00xL+I SHEAR H20 ENV
   3: STRI SHEAR = 0.00xDC1  STEEL WT + 0.00xDC2  DECK + 0.00xDC3  SDL LT + 1.50xDW  FWS UTIL + 0.00xL+I  MOMENT TRUCK
LANE + 0.00xblank + 0.00xDC3  SDL RT + 1.25xDC  DEAD LT + 0.00xFATIGUE MOMENT ENV + 0.00xFATIGUE SHEAR ENV + 0.00xL+I
MOMENT 6AXLE ENV + 0.00xL+I SHEAR 6AXLE ENV + 0.00xL+I MOMENT 3AXLE ENV + 0.00xL+I SHEAR 3AXLE ENV + 0.00xL+I MOMENT 4
MOMENT 5AXLE ENV + 0.00xL+I SHEAR 5AXLE ENV + 0.00xL+I MOMENT H20 ENV + 0.00xL+I SHEAR H20 ENV
   4: SVC II MOMENT = 0.00xDC1  STEEL WT + 0.00xDC2  DECK + 0.00xDC3  SDL LT + 1.00xDW  FWS UTIL + 1.30xL+I  MOMENT TR
LANE + 0.00xblank + 0.00xDC3  SDL RT + 1.00xDC  DEAD LT + 0.00xFATIGUE MOMENT ENV + 0.00xFATIGUE SHEAR ENV + 0.00xL+I
MOMENT 6AXLE ENV + 0.00xL+I SHEAR 6AXLE ENV + 0.00xL+I MOMENT 3AXLE ENV + 0.00xL+I SHEAR 3AXLE ENV + 0.00xL+I MOMENT 4
MOMENT 5AXLE ENV + 0.00xL+I SHEAR 5AXLE ENV + 0.00xL+I MOMENT H20 ENV + 0.00xL+I SHEAR H20 ENV
   5: SVCII SHEAR = 0.00xDC1  STEEL WT + 0.00xDC2  DECK + 0.00xDC3  SDL LT + 1.00xDW  FWS UTIL + 0.00xL+I  MOMENT TRUC
LANE + 0.00xblank + 0.00xDC3  SDL RT + 1.00xDC  DEAD LT + 0.00xFATIGUE MOMENT ENV + 0.00xFATIGUE SHEAR ENV + 0.00xL+I
MOMENT 6AXLE ENV + 0.00xL+I SHEAR 6AXLE ENV + 0.00xL+I MOMENT 3AXLE ENV + 0.00xL+I SHEAR 3AXLE ENV + 0.00xL+I MOMENT 4
MOMENT 5AXLE ENV + 0.00xL+I SHEAR 5AXLE ENV + 0.00xL+I MOMENT H20 ENV + 0.00xL+I SHEAR H20 ENV
   6: FATGI MOMENT = 0.00xDC1  STEEL WT + 0.00xDC2  DECK + 0.00xDC3  SDL LT + 0.00xDW  FWS UTIL + 0.00xL+I  MOMENT TRU
LANE + 0.00xblank + 0.00xDC3  SDL RT + 0.00xDC  DEAD LT + 1.50xFATIGUE MOMENT ENV + 0.00xFATIGUE SHEAR ENV + 0.00xL+I
MOMENT 6AXLE ENV + 0.00xL+I SHEAR 6AXLE ENV + 0.00xL+I MOMENT 3AXLE ENV + 0.00xL+I SHEAR 3AXLE ENV + 0.00xL+I MOMENT 4
MOMENT 5AXLE ENV + 0.00xL+I SHEAR 5AXLE ENV + 0.00xL+I MOMENT H20 ENV + 0.00xL+I SHEAR H20 ENV
   7: FATGI SHEAR = 0.00xDC1  STEEL WT + 0.00xDC2  DECK + 0.00xDC3  SDL LT + 0.00xDW  FWS UTIL + 0.00xL+I  MOMENT TRUC
LANE + 0.00xblank + 0.00xDC3  SDL RT + 0.00xDC  DEAD LT + 0.00xFATIGUE MOMENT ENV + 1.50xFATIGUE SHEAR ENV + 0.00xL+I
MOMENT 6AXLE ENV + 0.00xL+I SHEAR 6AXLE ENV + 0.00xL+I MOMENT 3AXLE ENV + 0.00xL+I SHEAR 3AXLE ENV + 0.00xL+I MOMENT 4
MOMENT 5AXLE ENV + 0.00xL+I SHEAR 5AXLE ENV + 0.00xL+I MOMENT H20 ENV + 0.00xL+I SHEAR H20 ENV


Masses


Masses Applied on Joints
   Joint   Applied Masses


==========================================================================
Static Analysis Results
__________________________________________________________________________


__________________________________________________________________________
Load Case: DW  FWS UTIL


Reactions in global CS
     Joint                Rx                Ry                 M
         0          0.000000         33.300000          0.000000
        10          0.000000         33.300000          0.000000


__________________________________________________________________________
Load Case: L+I  MOMENT TRUCK ENV


Reactions in global CS
     Joint                Rx                Ry                 M
         0          0.000000        103.285000          0.000000
        10          0.000000        103.285000          0.000000


__________________________________________________________________________
Load Case: L+I  SHEAR TRUCK ENV


Reactions in global CS
     Joint                Rx                Ry                 M
         0          0.000000        103.610000          0.000000
        10          0.000000        103.610000          0.000000


__________________________________________________________________________
Load Case: L+I M&V LANE


Reactions in global CS
     Joint                Rx                Ry                 M
         0          0.000000         42.180000          0.000000
```

10	0.000000	42.180000	0.000000

Load Case: DC DEAD LT

Reactions in global CS

Joint	Rx	Ry	M
0	0.000000	227.550000	0.000000
10	0.000000	227.550000	0.000000

Load Case: L+I MOMENT 3S2 ENV

Reactions in global CS

Joint	Rx	Ry	M
0	0.000000	88.915000	0.000000
10	0.000000	88.915000	0.000000

Load Case: L+I SHEAR 3S2 ENV

Reactions in global CS

Joint	Rx	Ry	M
0	0.000000	90.185000	0.000000
10	0.000000	90.185000	0.000000

Load Case: L+I MOMENT 6AXLE ENV

Reactions in global CS

Joint	Rx	Ry	M
0	0.000000	155.830000	0.000000
10	0.000000	155.830000	0.000000

Load Case: L+I SHEAR 6AXLE ENV

Reactions in global CS

Joint	Rx	Ry	M
0	0.000000	157.235000	0.000000
10	0.000000	157.235000	0.000000

Load Case: L+I MOMENT 3AXLE ENV

Reactions in global CS

Joint	Rx	Ry	M
0	0.000000	84.740000	0.000000
10	0.000000	84.740000	0.000000

Load Case: L+I SHEAR 3AXLE ENV

Reactions in global CS

Joint	Rx	Ry	M
0	0.000000	85.305000	0.000000
10	0.000000	85.305000	0.000000

Load Case: L+I MOMENT 4AXLE ENV

Reactions in global CS

Joint	Rx	Ry	M
0	0.000000	95.745000	0.000000
10	0.000000	95.745000	0.000000

Rutland VT truss span 2, for Rating

Load Case: L+I SHEAR 4AXLE ENV

Reactions in global CS

Joint	Rx	Ry	M
0	0.000000	96.265000	0.000000
10	0.000000	96.265000	0.000000

Load Case: L+I MOMENT 5AXLE ENV

Reactions in global CS

Joint	Rx	Ry	M
0	0.000000	97.430000	0.000000
10	0.000000	97.430000	0.000000

Load Case: L+I SHEAR 5AXLE ENV

Reactions in global CS

Joint	Rx	Ry	M
0	0.000000	98.510000	0.000000
10	0.000000	98.510000	0.000000

Load Case: L+I MOMENT H20 ENV

Reactions in global CS

Joint	Rx	Ry	M
0	0.000000	57.885000	0.000000
10	0.000000	57.885000	0.000000

Load Case: L+I SHEAR H20 ENV

Reactions in global CS

Joint	Rx	Ry	M
0	0.000000	58.270000	0.000000
10	0.000000	58.270000	0.000000

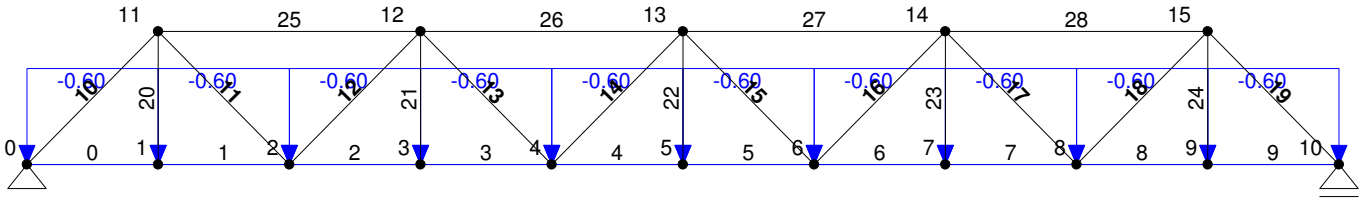
11
25
12
26
13
27
14
28
15
-0.60
10
20
-0.60
11
-0.60
12
21
-0.60
13
-0.60
14
22
-0.60
15
-0.60
16
23
-0.60
17
-0.60
18
24
-0.60
19
0
0
1
1
2
2
3
3
4
4
5
5
6
6
7
7
8
8
9
9
10

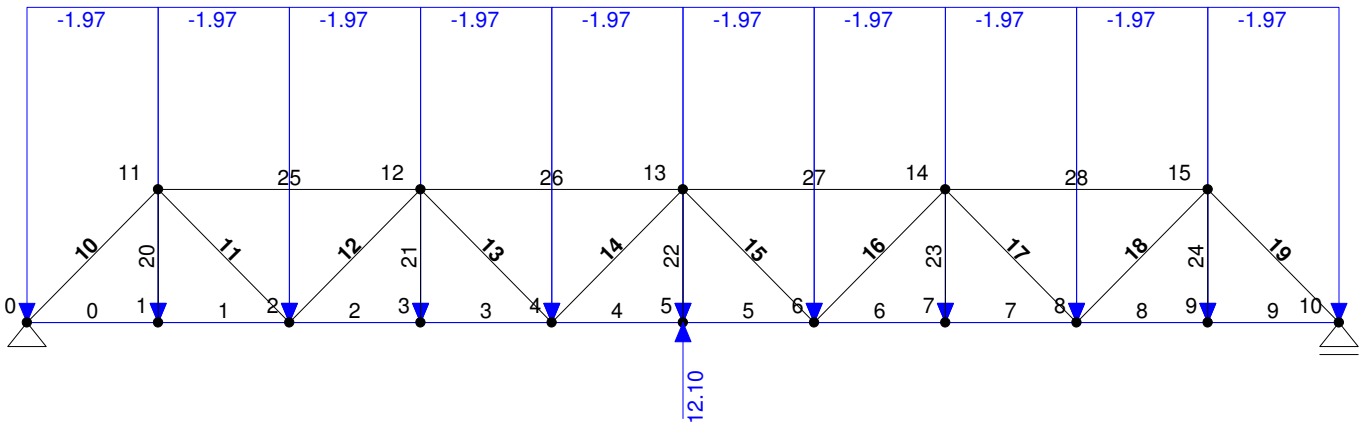
-1.97
-1.97
-1.97
-1.97
-1.97
-1.97
-1.97
-1.97
-1.97
-1.97
11
25
12
26
13
27
14
28
15
10
20
11
12
21
13
14
22
15
16
23
17
18
24
19
0
0
1
1
2
2
3
3
4
4
5
5
6
6
7
7
8
8
9
9
10
12.10

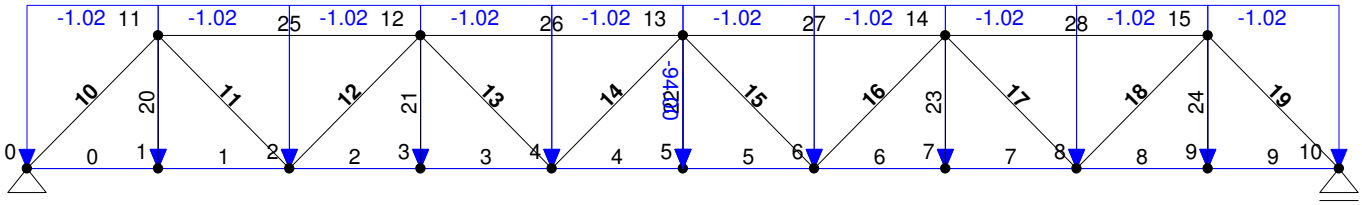
-1.02
11
25
12
26
13
27
14
28
15
10
20
11
12
21
13
14
22
-9.42
15
16
23
17
18
24
19
0
1
2
3
4
5
6
7
8
9
10

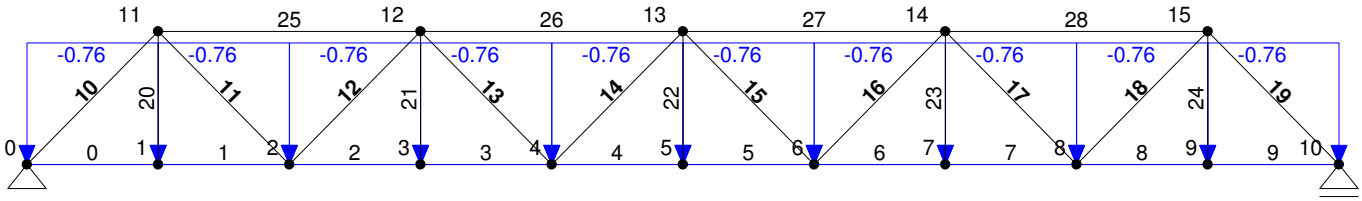
11
25
12
26
13
27
14
28
15
-0.76
10
20
11
12
21
13
14
22
15
16
23
17
18
24
19
0
1
2
3
4
5
6
7
8
9
10

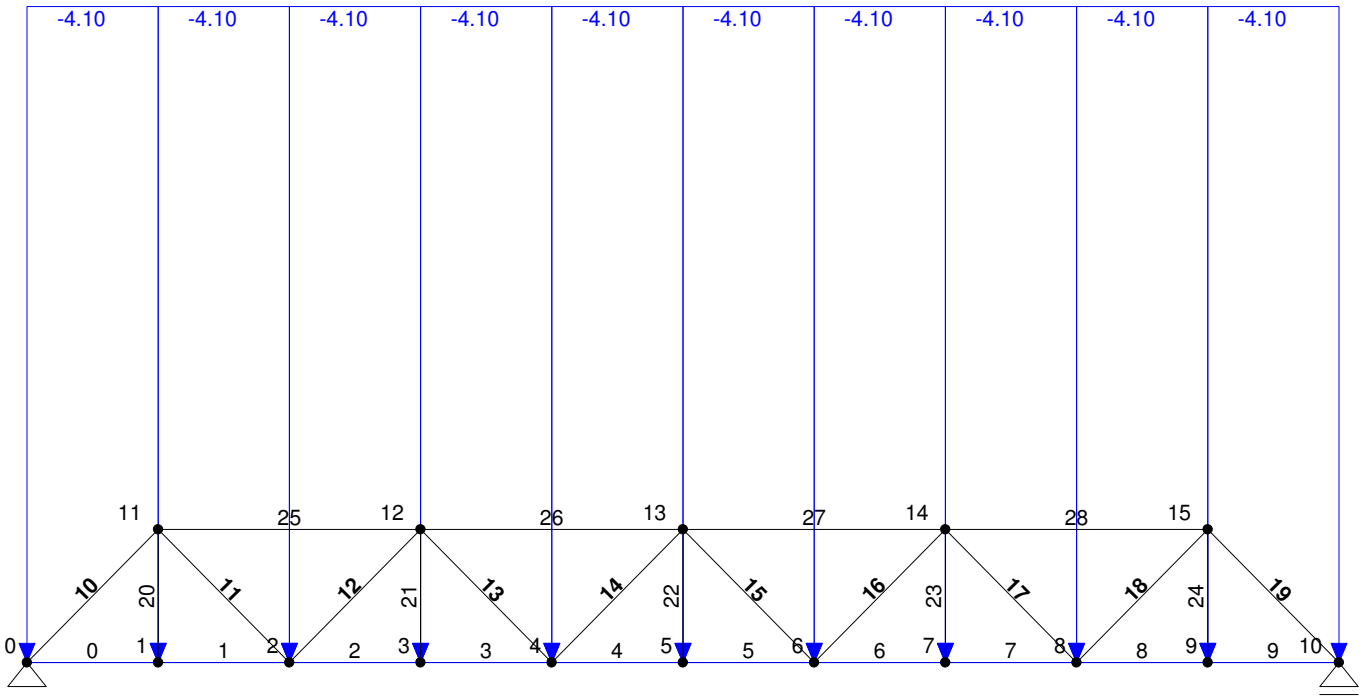
-4.10
-4.10
-4.10
-4.10
-4.10
-4.10
-4.10
-4.10
-4.10
-4.10
11
25
12
26
13
27
14
28
15
10
20
11
12
21
13
14
22
15
16
23
17
18
24
19
0
0
1
1
2
2
3
3
4
4
5
5
6
6
7
7
8
8
9
9
10

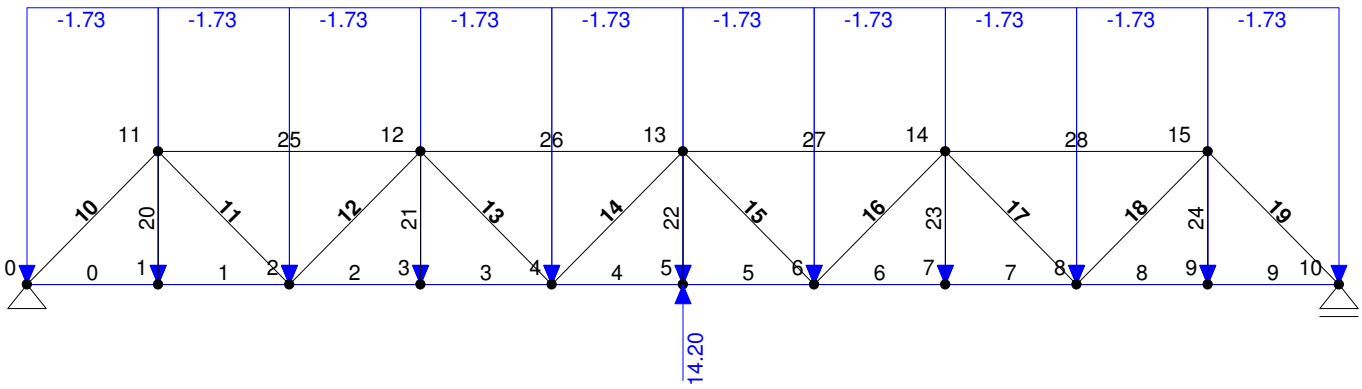
-1.73
-1.73
-1.73
-1.73
-1.73
-1.73
-1.73
-1.73
-1.73
-1.73
11
25
12
26
13
27
14
28
15
10
20
11
12
21
13
14
22
15
16
23
17
18
24
19
0
0
1
1
2
2
3
3
4
4
5
5
6
6
7
7
8
8
9
9
10
14.20

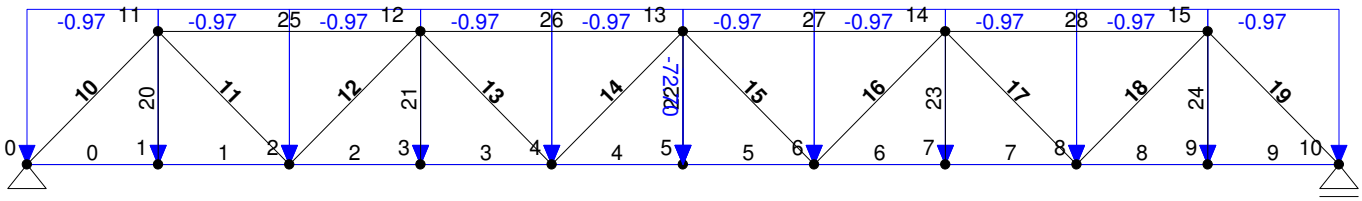
-0.97
11
25
12
26
13
27
14
28
15
10
20
11
12
21
13
14
22
-722
15
16
23
17
18
24
19
0
1
2
3
4
5
6
7
8
9
10

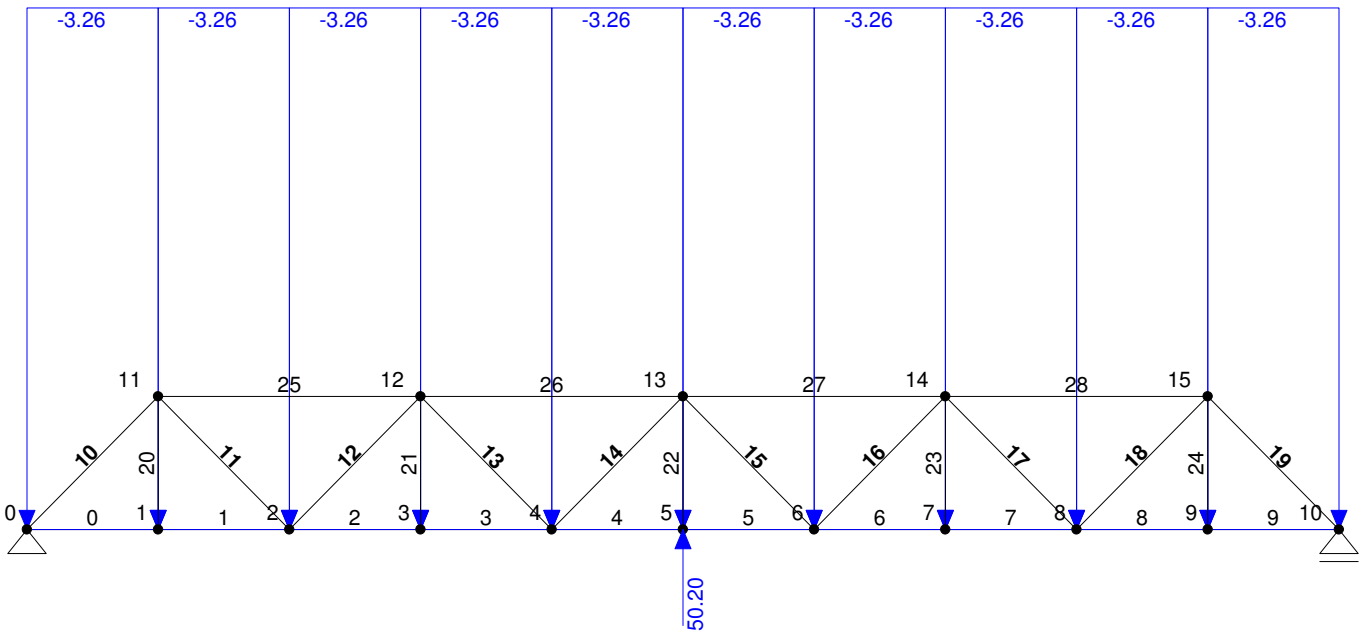
-3.26
-3.26
-3.26
-3.26
-3.26
-3.26
-3.26
-3.26
-3.26
-3.26
11
25
12
26
13
27
14
28
15
10
20
11
12
21
13
14
22
15
16
23
17
18
24
19
0
0
1
1
2
2
3
3
4
4
5
5
6
6
7
7
8
8
9
9
10
50.20

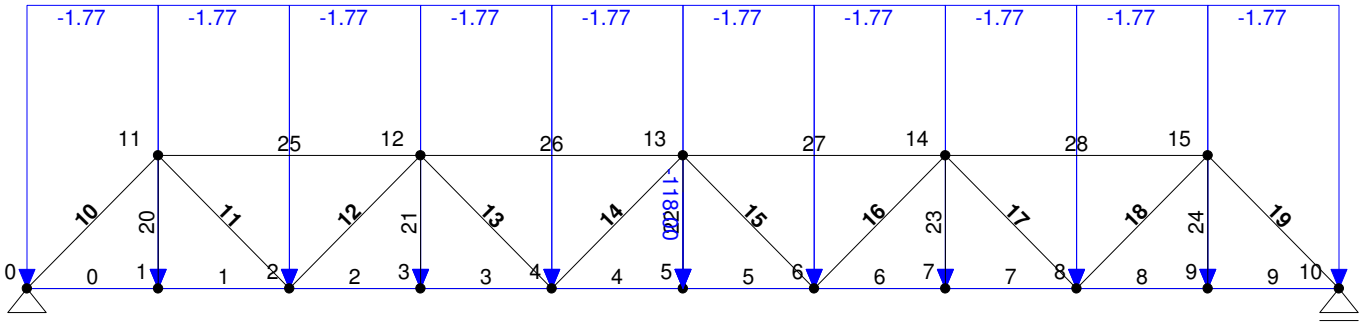
-1.77
-1.77
-1.77
-1.77
-1.77
-1.77
-1.77
-1.77
-1.77
-1.77
11
25
12
26
13
27
14
28
15
10
20
11
12
21
13
14
-11.82
15
16
23
17
18
24
19
0
0
1
1
2
2
3
3
4
4
5
5
6
6
7
7
8
8
9
9
10

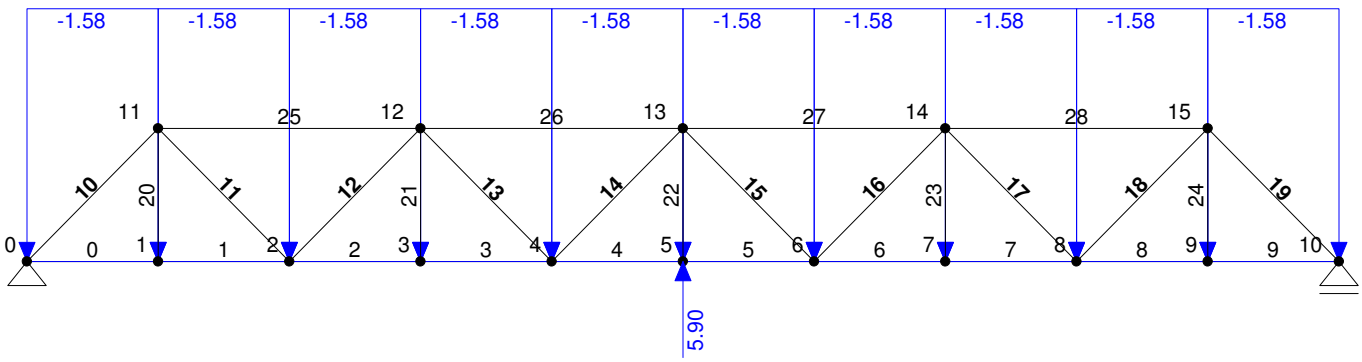
-1.58
-1.58
-1.58
-1.58
-1.58
-1.58
-1.58
-1.58
-1.58
-1.58
11
25
12
26
13
27
14
28
15
10
20
11
12
21
13
14
22
15
16
23
17
18
24
19
0
0
1
1
2
2
3
3
4
4
5
5
6
6
7
7
8
8
9
9
10
5.90

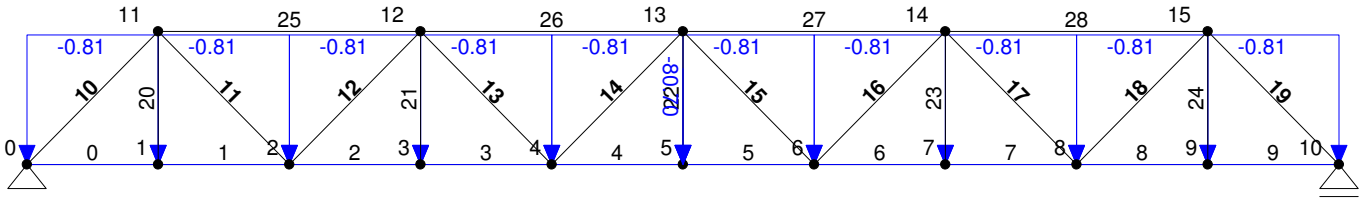
11
25
12
26
13
27
14
28
15
-0.81
10
20
11
12
21
13
14
15
16
23
17
18
24
19
0
1
2
3
4
5
6
7
8
9
10

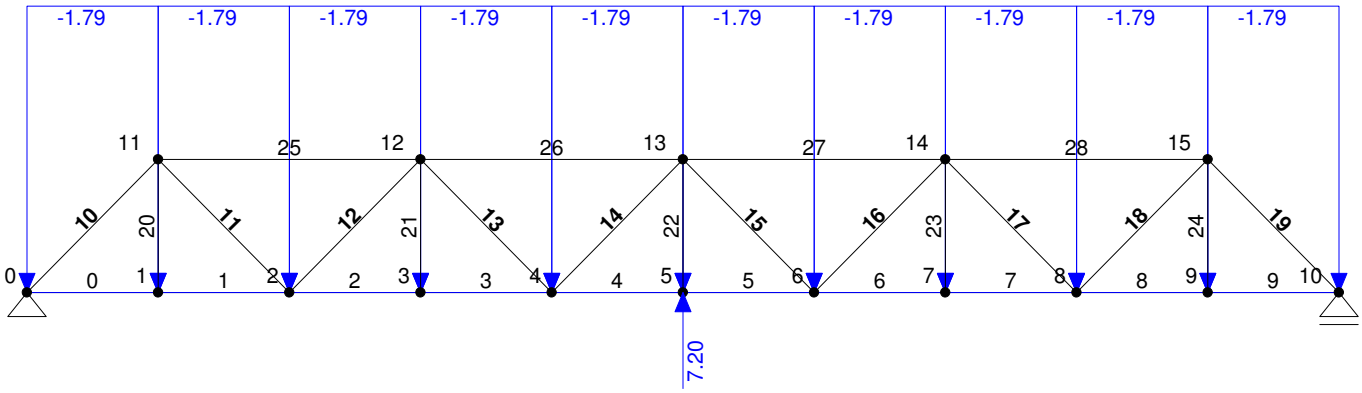
-1.79
-1.79
-1.79
-1.79
-1.79
-1.79
-1.79
-1.79
-1.79
-1.79
11
25
12
26
13
27
14
28
15
10
20
11
12
21
13
14
22
15
16
23
17
18
24
19
0
0
1
1
2
2
3
3
4
4
5
5
6
6
7
7
8
8
9
9
10
7.20

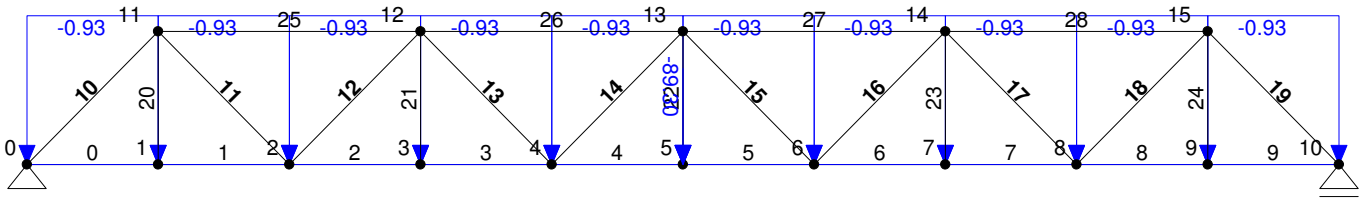
-0.93
-0.93
-0.93
-0.93
-0.93
-0.93
-0.93
-0.93
-0.93
-0.93
11
25
12
26
13
27
14
28
15
10
20
11
12
21
13
14
15
16
23
17
18
24
19
0
1
2
3
4
5
6
7
8
9
10

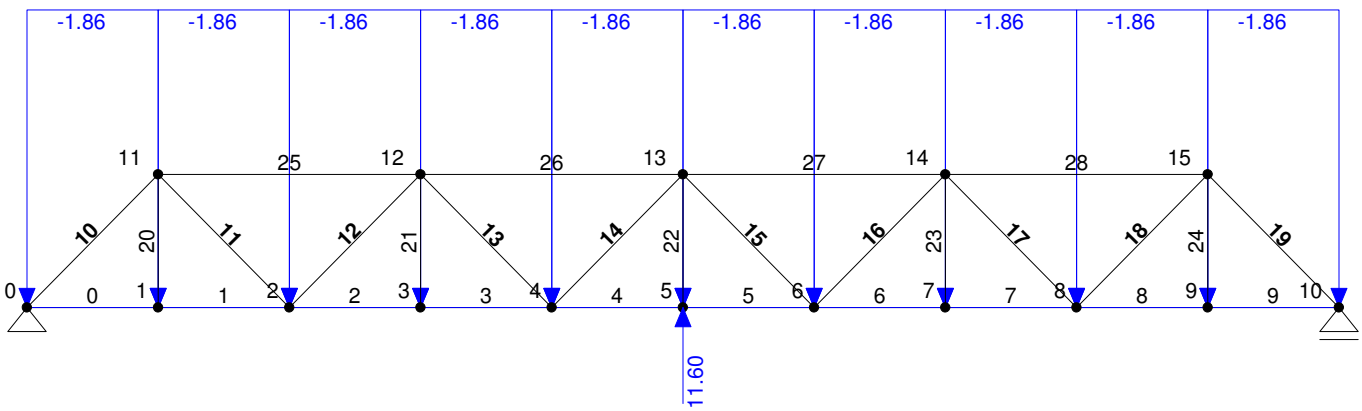
-1.86
-1.86
-1.86
-1.86
-1.86
-1.86
-1.86
-1.86
-1.86
-1.86
11
25
12
26
13
27
14
28
15
10
20
11
12
21
13
14
22
15
16
23
17
18
24
19
0
0
1
1
2
2
3
3
4
4
5
5
6
6
7
7
8
8
9
9
10
11.60

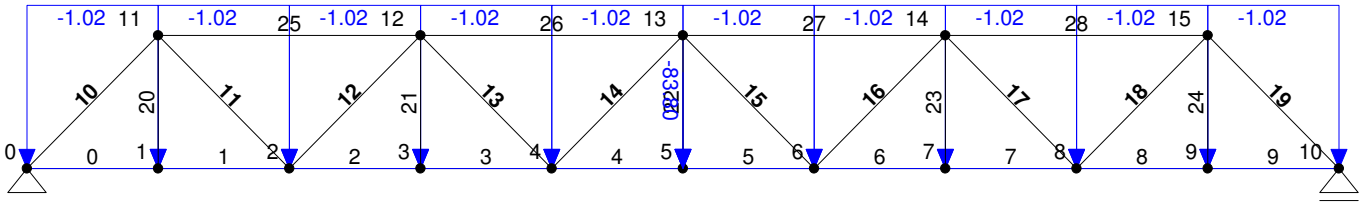
-1.02
11
25
12
26
13
27
14
28
15
10
20
11
12
21
13
14
22
15
16
23
17
18
24
19
0
1
2
3
4
5
6
7
8
9
10

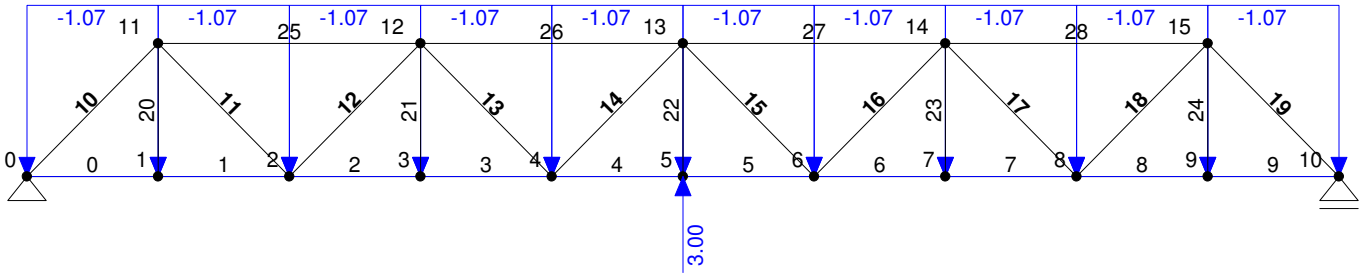
-1.07
11
25
12
26
13
27
14
28
15
10
20
11
12
21
13
14
22
15
16
23
17
18
24
19
0
1
2
3
4
5
6
7
8
9
10
3.00

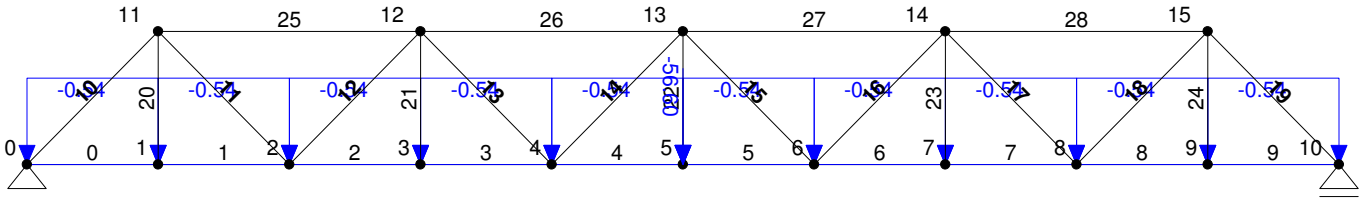
11
25
12
26
13
27
14
28
15
-0.54
20
-0.57
17
-0.54
21
-0.57
18
-0.54
22
-0.57
19
-0.54
23
-0.57
17
-0.54
24
-0.57
16
0
0
1
1
2
2
3
3
4
4
5
5
6
6
7
7
8
8
9
9
10

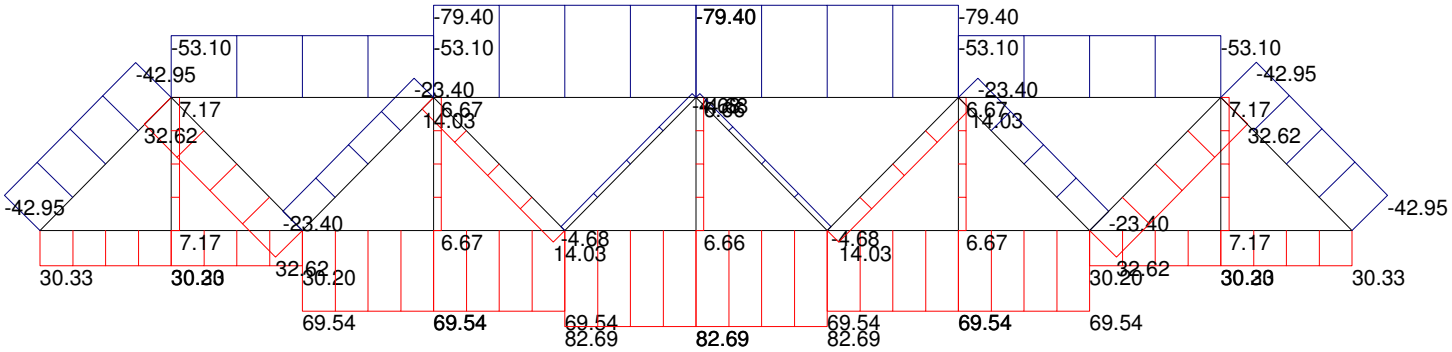
-79.40
-79.40
-79.40
-53.10
-53.10
-53.10
-53.10
-42.95
-42.95
-42.95
-42.95
-23.40
-23.40
-23.40
-23.40
7.17
32.62
6.67
14.03
6.67
14.03
7.17
32.62
7.17
32.62
6.67
14.03
6.66
14.03
6.67
7.17
30.33
30.20
30.20
30.20
30.20
30.33
69.54
69.54
69.54
82.69
82.69
82.69
69.54
69.54

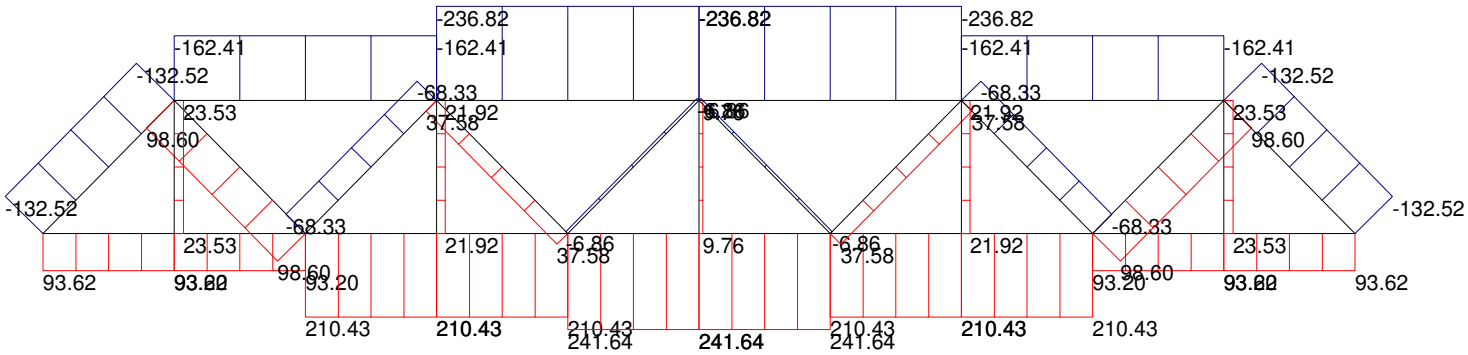
-236.82
-236.82
-236.82
-162.41
-162.41
-162.41
-162.41
-132.52
-132.52
-132.52
-132.52
-68.33
-68.33
-68.33
-68.33
23.53
98.60
21.92
37.58
21.92
37.58
23.53
98.60
23.53
21.92
-6.86
37.58
9.76
-6.86
37.58
21.92
23.53
93.62
93.20
93.20
93.62
210.43
210.43
210.43
241.64
241.64
210.43
210.43
210.43

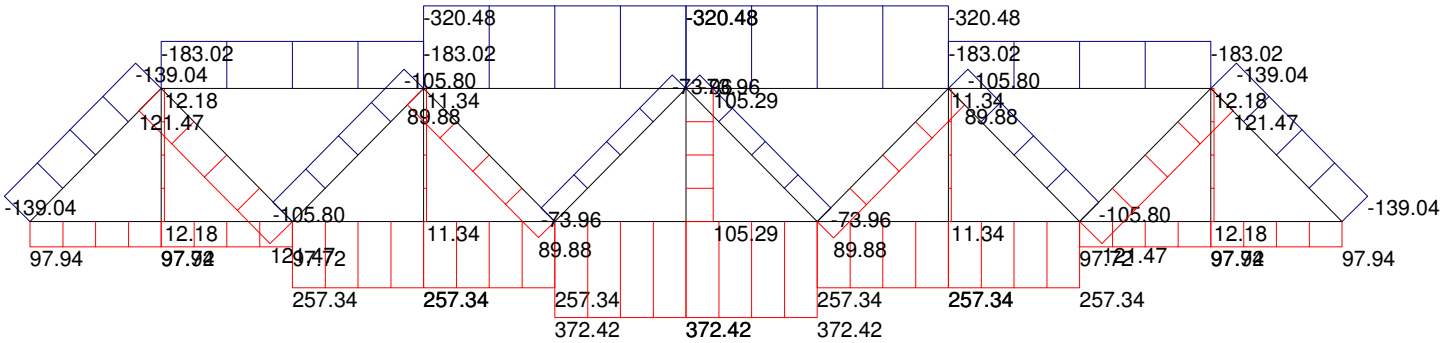
-320.48
-320.48
-320.48
-183.02
-183.02
-183.02
-183.02
-139.04
-139.04
-105.80
-105.80
-105.80
-139.04
12.18
121.47
11.34
89.88
105.29
11.34
89.88
12.18
121.47
-139.04
-105.80
-73.96
-73.96
-105.80
-139.04
12.18
11.34
89.88
105.29
89.88
11.34
12.18
97.94
97.94
257.34
257.34
257.34
257.34
257.34
257.34
372.42
372.42
372.42

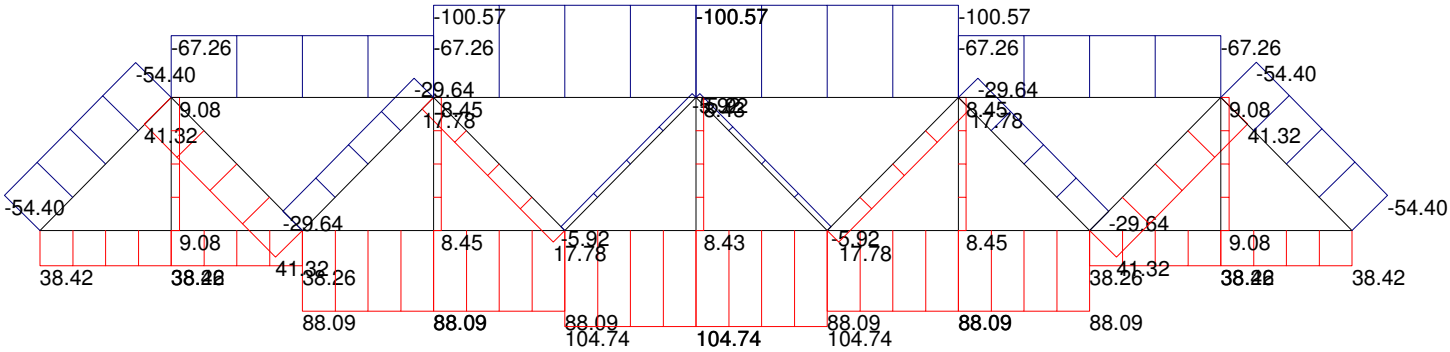
-100.57
-100.57
-100.57
-67.26
-67.26
-67.26
-67.26
-54.40
-54.40
-54.40
-54.40
-29.64
-29.64
-29.64
-29.64
9.08
9.08
9.08
9.08
41.32
41.32
41.32
41.32
8.45
8.45
8.45
8.45
17.78
17.78
17.78
17.78
-5.92
-5.92
8.43
38.42
38.42
38.26
38.26
88.09
88.09
88.09
88.09
88.09
88.09
104.74
104.74
104.74

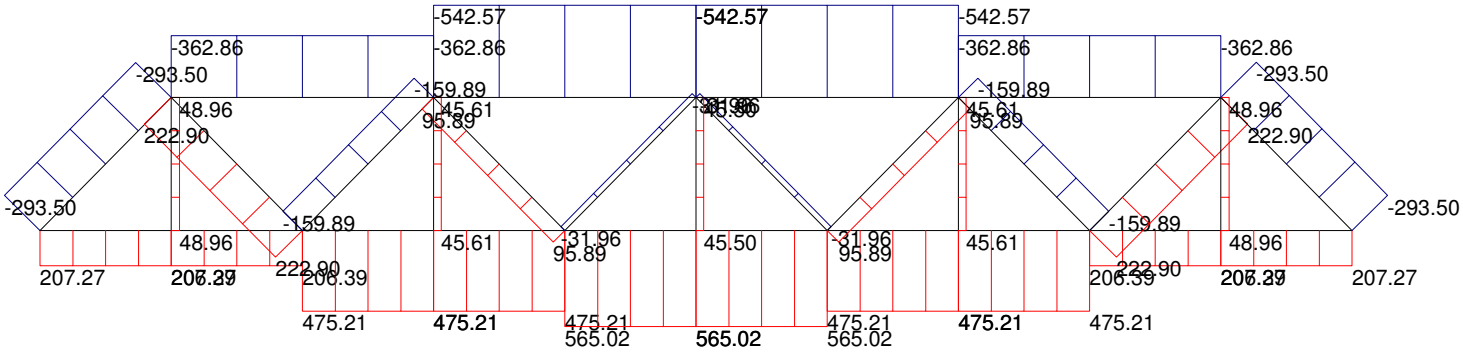
-542.57
-542.57
-542.57
-362.86
-362.86
-362.86
-362.86
-293.50
-159.89
-159.89
-293.50
48.96
45.61
45.61
48.96
222.90
95.89
95.89
222.90
-293.50
-159.89
-159.89
-293.50
48.96
45.61
-31.96
45.50
-31.96
45.61
48.96
95.89
95.89
207.27
222.90
206.39
206.39
222.90
207.27
207.27
475.21
475.21
475.21
565.02
565.02
565.02
475.21
475.21
475.21

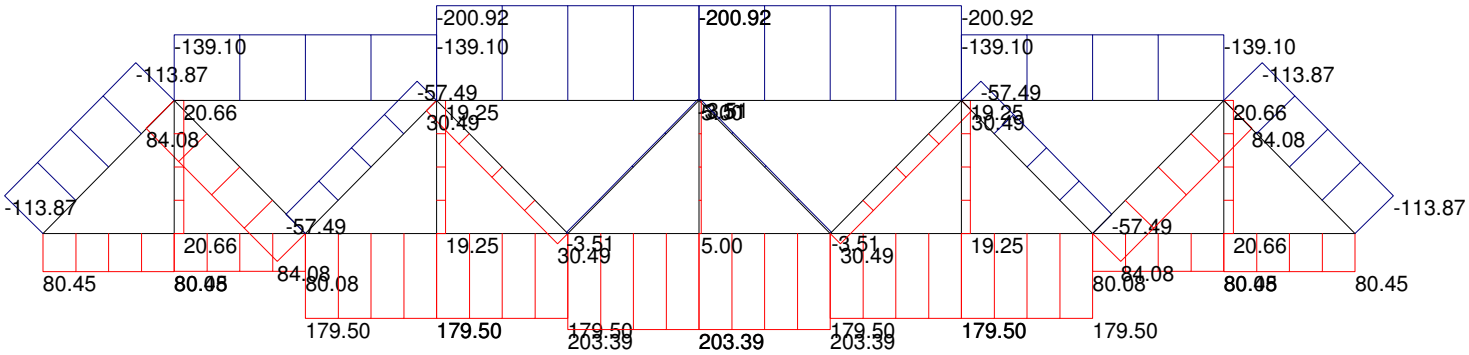
-200.92
-139.10
-113.87
-57.49
20.66
84.08
19.25
30.49
-3.51
5.00
80.45
80.08
179.50
203.39

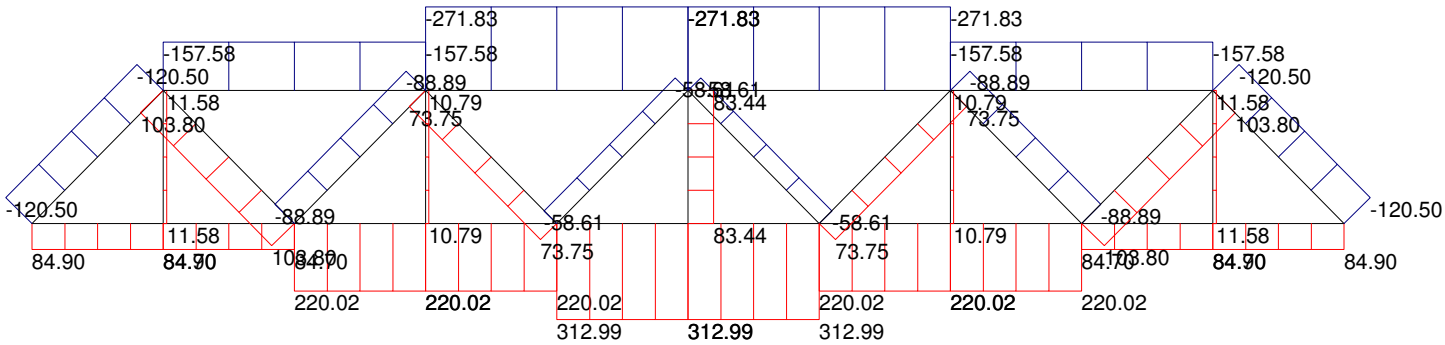
-271.83
-157.58
-120.50
-88.89
11.58
103.80
10.79
73.75
58.61
83.44
-120.50
84.90
220.02
312.99

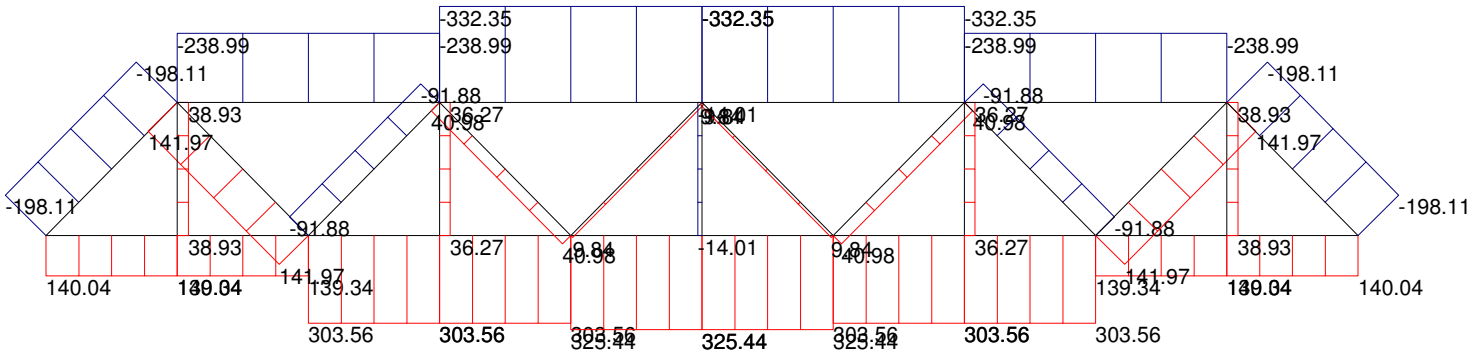
-332.35
-238.99
-198.11
-91.88
38.93
141.97
36.27
40.98
-14.01
9.84
140.04
139.34
303.56
325.44

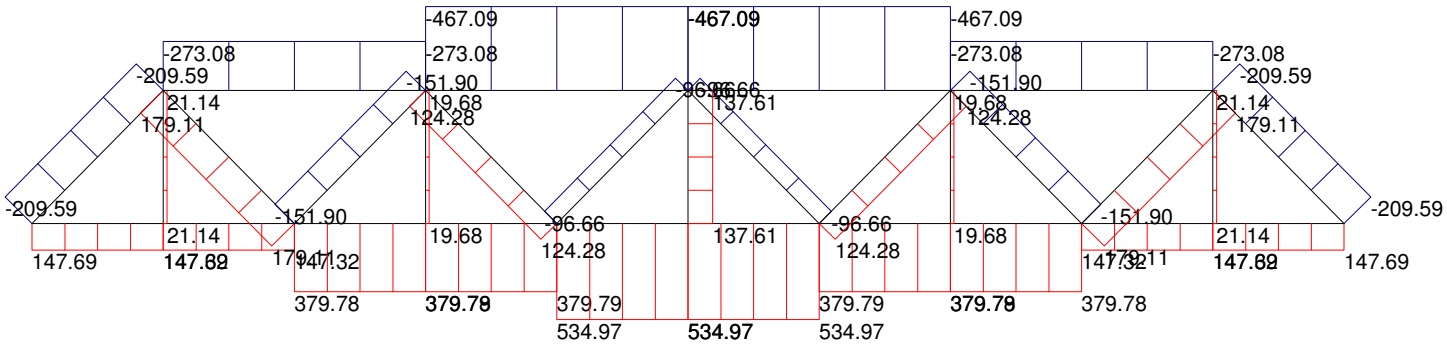
-467.09
-273.08
-209.59
21.14
179.11
-151.90
19.68
124.28
-96.66
137.61
-209.59
147.69
147.69
379.78
379.79
534.97

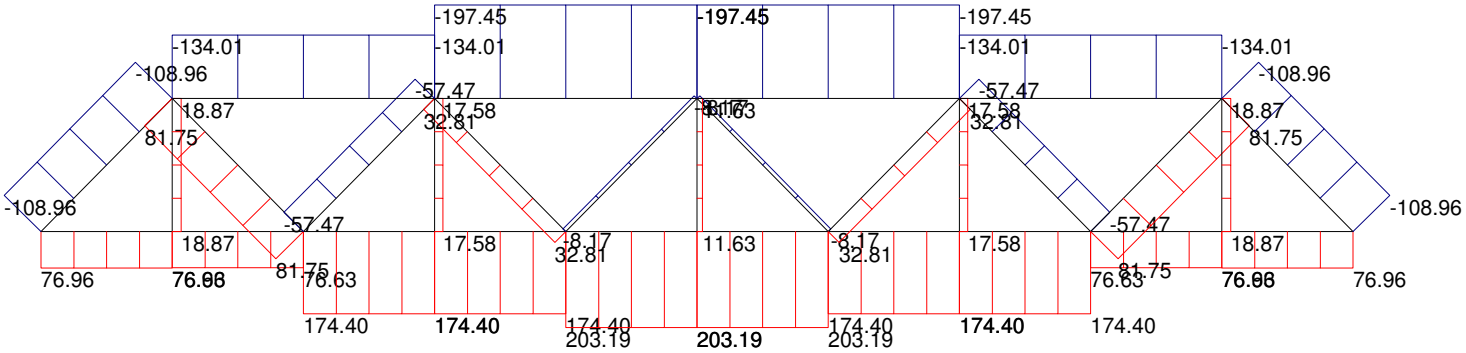
-197.45
-197.45
-197.45
-134.01
-134.01
-134.01
-134.01
-108.96
-108.96
-108.96
-108.96
-57.47
-57.47
-57.47
-57.47
18.87
81.75
17.58
32.81
11.63
-8.17
32.81
17.58
18.87
81.75
76.96
76.96
76.63
174.40
174.40
174.40
203.19
203.19
203.19
174.40
174.40
76.63
76.96
76.96

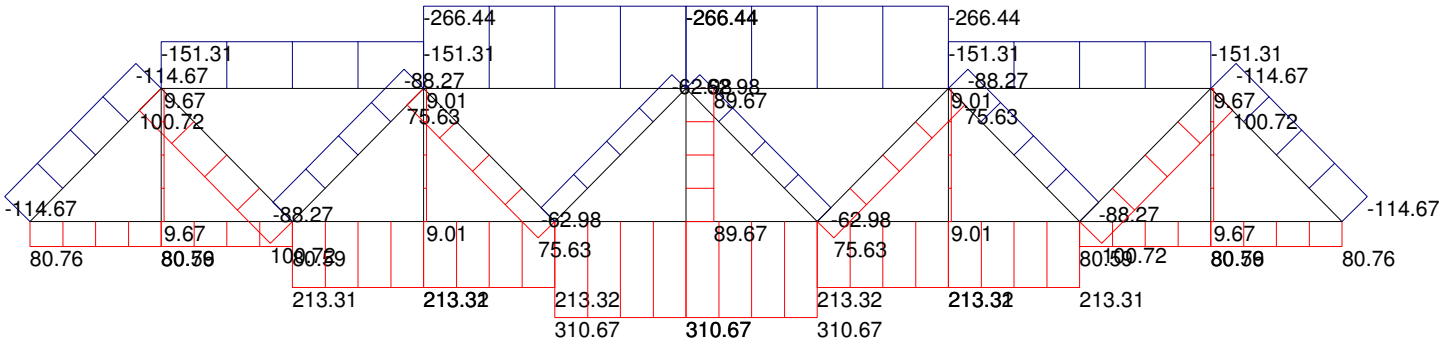
-266.44
-266.44
-266.44
-151.31
-151.31
-151.31
-151.31
-114.67
-88.27
-88.27
-114.67
9.67
9.01
9.01
9.67
100.72
75.63
75.63
100.72
-114.67
-88.27
62.98
-62.98
-88.27
-114.67
9.67
9.01
9.01
9.67
80.76
75.63
89.67
75.63
80.76
213.31
213.32
213.32
213.32
213.31
310.67
310.67
310.67

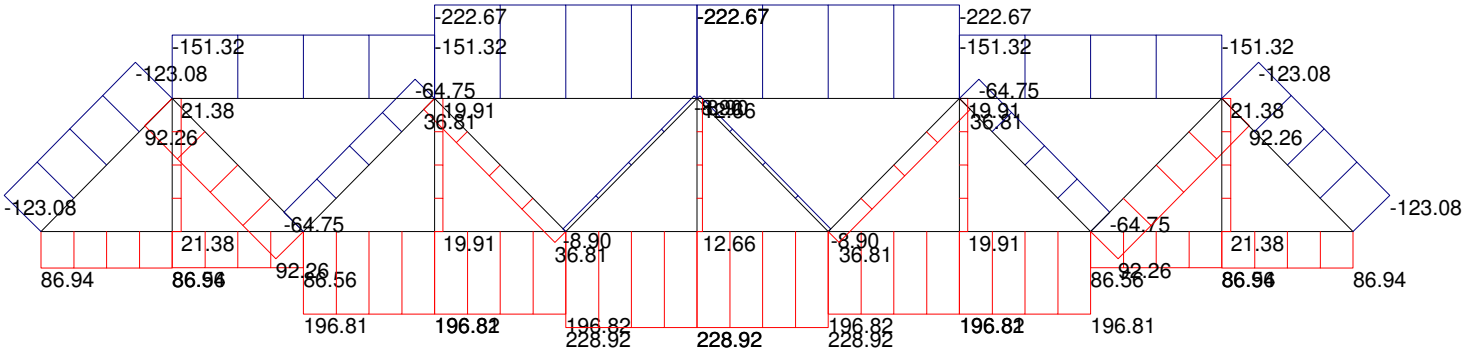
-222.67
-222.67
-222.67
-151.32
-151.32
-151.32
-151.32
-123.08
-123.08
-64.75
-64.75
-64.75
21.38
19.91
19.91
21.38
92.26
36.81
36.81
92.26
-123.08
-123.08
-64.75
-64.75
21.38
19.91
-8.90
12.66
-8.90
19.91
21.38
36.81
36.81
86.94
86.56
86.56
86.94
196.81
196.81
196.82
228.92
228.92
196.82
196.81
196.81

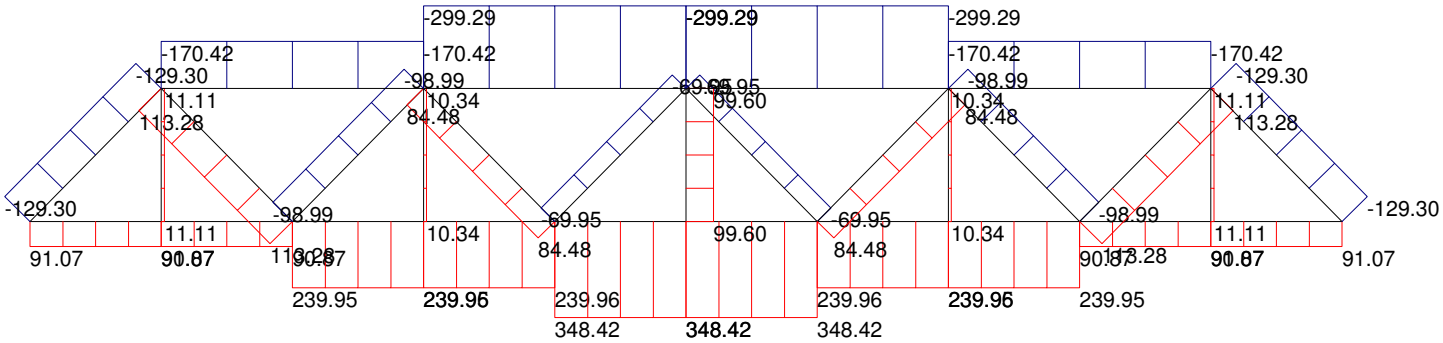
-299.29
-299.29
-299.29
-170.42
-170.42
-170.42
-170.42
-129.30
-98.99
-98.99
-129.30
11.11
10.34
99.60
10.34
11.11
113.28
84.48
84.48
113.28
-129.30
-98.99
69.95
-69.95
-98.99
-129.30
11.11
10.34
99.60
10.34
11.11
91.07
90.87
84.48
84.48
90.87
91.07
239.95
239.96
239.96
239.96
239.95
348.42
348.42
348.42

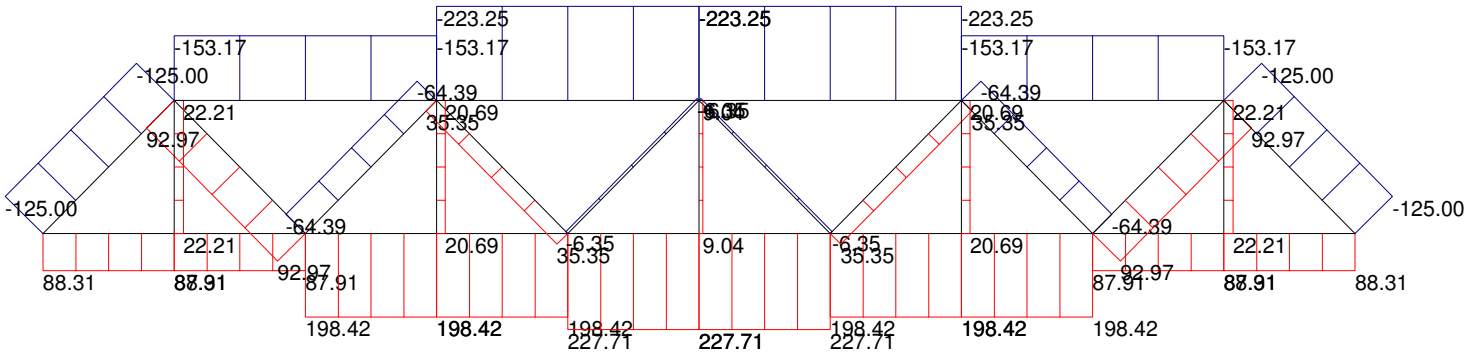
-223.25
-223.25
-223.25
-153.17
-153.17
-153.17
-153.17
-125.00
-125.00
-125.00
-125.00
-64.39
-64.39
-64.39
22.21
20.69
20.69
22.21
92.97
35.35
35.35
92.97
-64.39
22.21
20.69
-6.35
9.04
-6.35
20.69
22.21
35.35
35.35
92.97
88.31
87.91
87.91
88.31
198.42
198.42
198.42
227.71
227.71
198.42
198.42
198.42

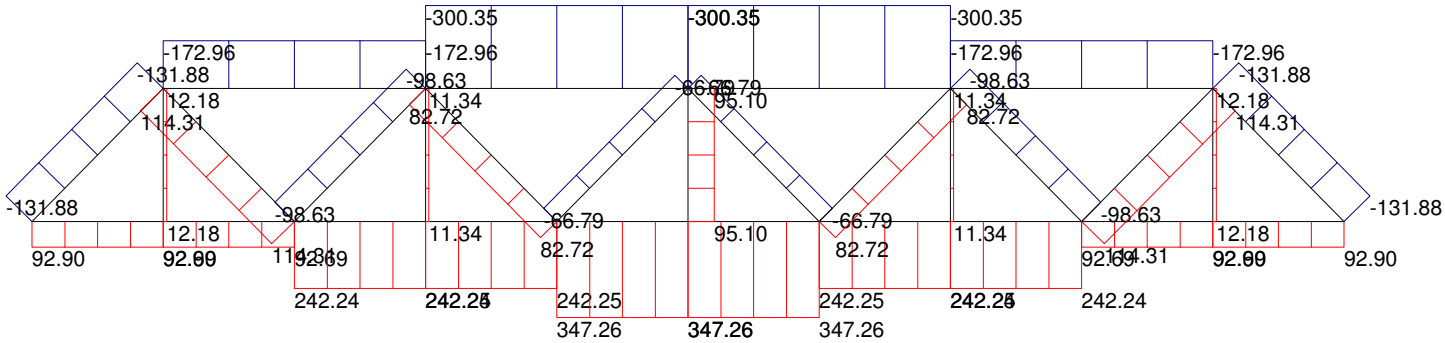
-300.35
-172.96
-131.88
12.18
114.31
-98.63
11.34
82.72
66.79
95.10
-66.79
-131.88
92.90
242.24
242.25
347.26

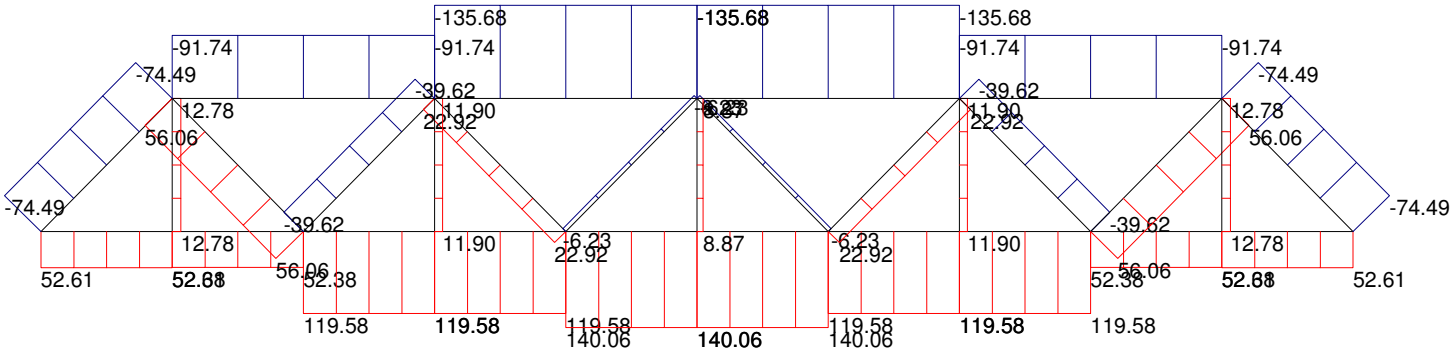
-135.68
-135.68
-135.68
-91.74
-91.74
-91.74
-91.74
-74.49
-74.49
-74.49
-74.49
-39.62
-39.62
-39.62
-39.62
12.78
56.06
11.90
22.92
11.90
22.92
12.78
56.06
12.78
56.06
11.90
22.92
8.87
-6.23
22.92
11.90
12.78
52.61
52.38
119.58
119.58
140.06
140.06
119.58
119.58
52.38
52.61

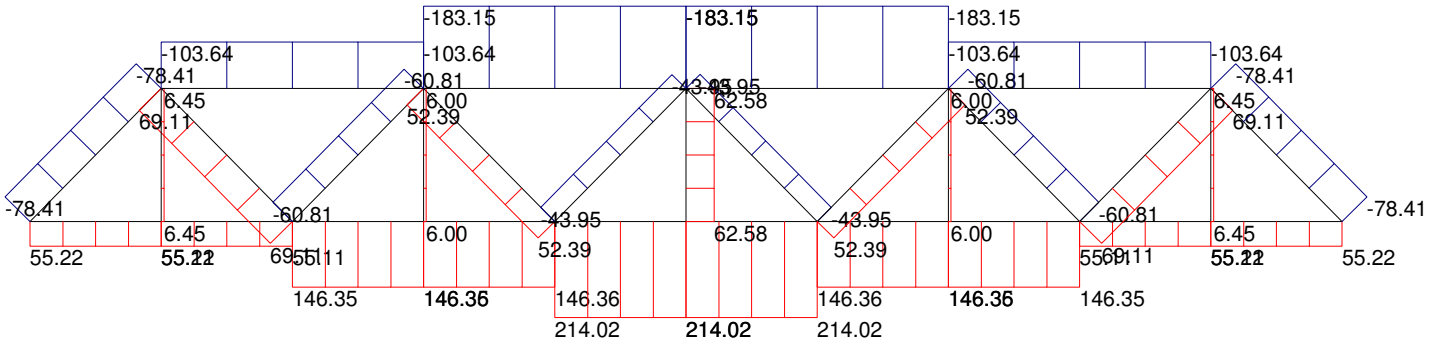
-183.15
-103.64
-78.41
-60.81
-43.95
62.58
6.45
69.11
6.00
52.39
55.22
146.35
146.36
214.02