KUBRICKY CONSTRUCTION CORP.
269 BALLARD ROAD

WILTON, NY 12831
518 792-5864

KUBRICKY CONSTRUCTION CORP.
A PROUD MEMBER OF THE D.A. COLLINS™ COMPANIES
An Equal Opportunity Employer

Rutland City BRF 3000 (2014036)
SUBMITTAL 85.2

Issued 04/18/16
Respond by 04/22/16

To

Timothy Pockette, PE

Topic	BRF3000 Subm 85.2 (19) Ripley Bridge Bearing Shop Drawings R2
Status	For Approval

Message Revised per previous comments.

Courtesy Copy

Volker H.D. Burkowski

From

MICHAEL MARTIN

Signed by Michael C. Martin Date 04/18/2016

Proceed as Indicated _____ Date _____
Owner Authorized Representative

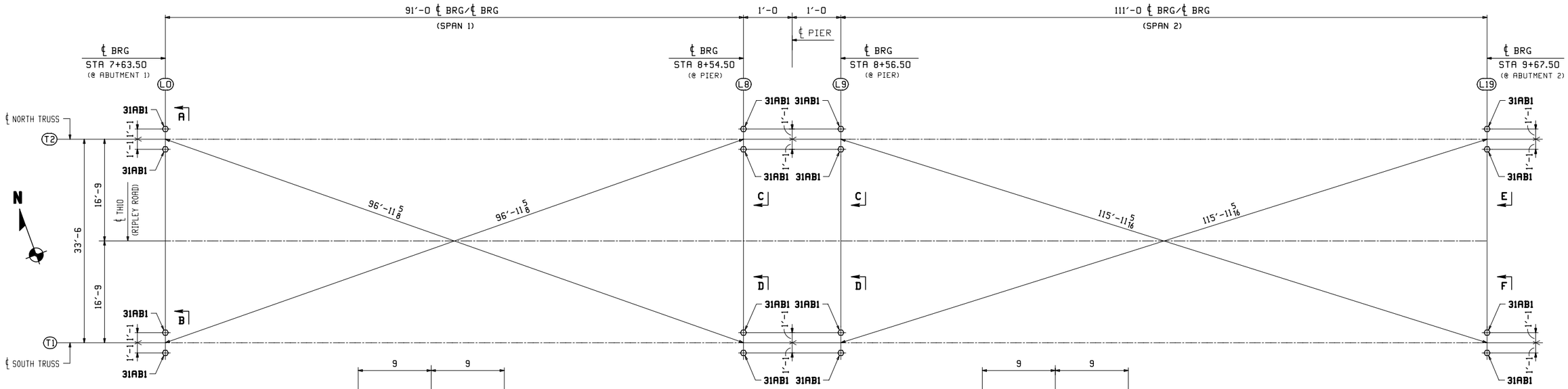

ANCHOR BOLT FRAMING PLAN

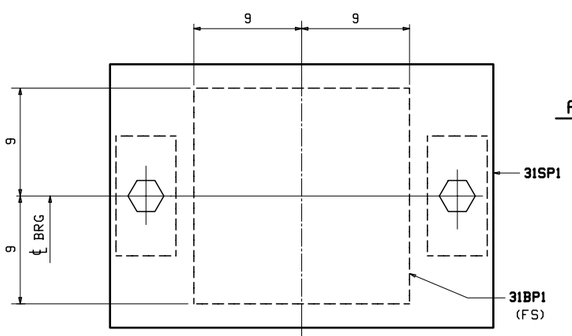

SECTION -AA

(BEARING POST NOT SHOWN FOR CLARITY)

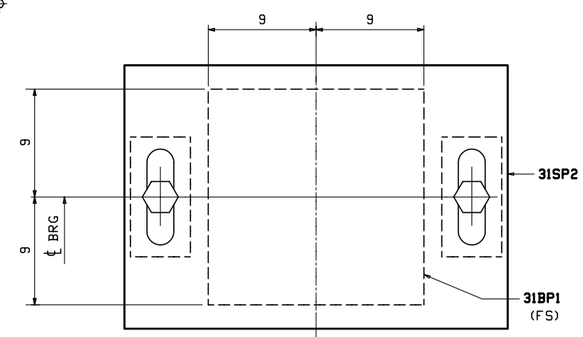

SECTION -BB

(BEARING POST NOT SHOWN FOR CLARITY)

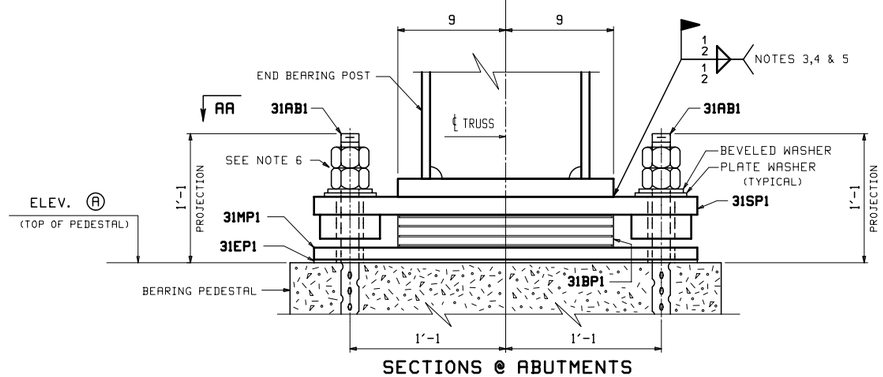

SECTIONS @ ABUTMENTS

(FIXED BEARING)

	SECTION	ELEVATION Ⓐ
(@ ABUT. 1)	A	522.95
(@ ABUT. 1)	B	523.59
(@ ABUT. 2)	E	521.65
(@ ABUT. 2)	F	522.29

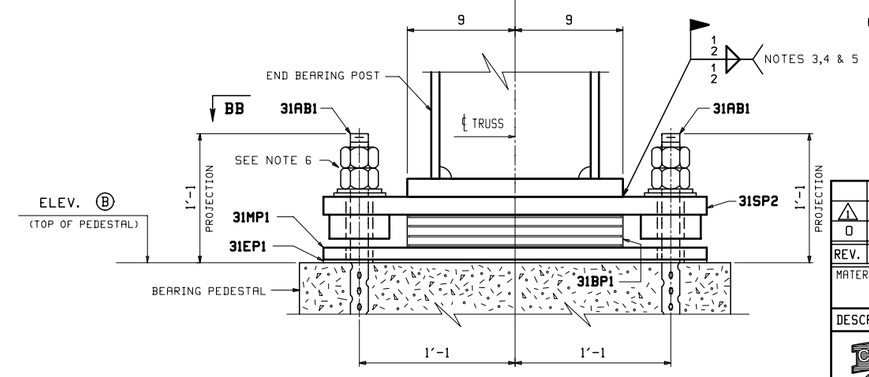

SECTIONS @ PIER

(EXPANSION BEARING)

SECTION	ELEVATION Ⓑ
C	524.20
D	524.84

NOTES:

1. ALL DIMENSIONS ARE GIVEN HORIZONTALLY IN THE FINAL POSITION OF BRIDGE.
2. FOR GENERAL NOTES SEE DWG. GN1.
3. DURING WELDING, SURFACES IN CONTACT WITH THE ELASTOMER SHALL BE RESTRICTED TO 200 DEGREES FAHRENHEIT AND SURFACES IN CONTACT WITH PTFE SHALL BE RESTRICTED TO 300 DEGREES FAHRENHEIT.
4. THE WELDS FOR THE SOLE PLATE CONNECTION SHOULD ONLY BE ALONG THE LONGITUDINAL TRUSS AXIS. TRANSVERSE JOINTS SHOULD BE SEALED WITH AN ACCEPTABLE CAULKING MATERIAL.
5. GALVANIZING THAT HAS BEEN DAMAGED SHALL BE REPAIRED IN ACCORDANCE WITH ASTM A780 STANDARD PRACTICE FOR REPAIR OF DAMAGED HOT DIP GALVANIZED COATINGS, ANNEX A2.
6. ANCHOR BOLTS WITH TWO NUTS SHALL USE THE FOLLOWING PROCEDURE: INSTALL THE LOWER NUT IN CONTACT WITH TOP OF SOLE PLATE AND THEN BACK OFF 1/2 TURN. INSTALL UPPER NUT SNUG TIGHT TO PREVENT LOWER NUT FROM LOOSENING.

REV.	DATE	REMARKS	DWN	CHK	APVL	SHOP
1	4/12/16	REVISED ELEVATIONS	RB	WJL		
0						

MATERIAL: | SURFACE PREP. & PAINT: | HOLES: | SHOP BOLTS:

DESCRIPTION: ANCHOR BOLT FRAMING PLAN & BEARING DETAILS

CASCO BAY STEEL STRUCTURES, INC.
1 WALLACE AVE.
SOUTH PORTLAND, ME 04106
PHONE (207) 780-6722
FAX. (207) 780-6726
TENSOR 3285

STRUCTURE: TH-10 OVER OTTER CREEK PONY TRUSS BRIDGE		DRAWN: RB	DATE: 3/29/16
		CHKD: WJL	DATE: 3/29/16
LOCATION: RUTLAND CITY, VERMONT		JOB NO.	DWG NO.
PROJ NO. BRF 3000 (19)		598	E7
CUSTOMER: KUBRICKY CONSTRUCTION CORP.			REV. 1

WJL Tue, Apr 12, 2016 04:02:46 PM /users/jobs/3285-E7 - Revi

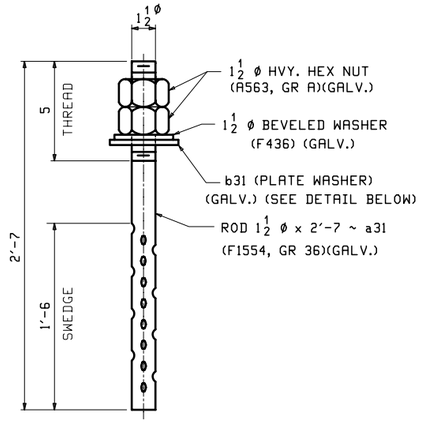

16 ~ ANCHOR BOLTS ~ 31AB1

(@ FIXED & EXPANSION BEARING)

SEE NOTE "GA"

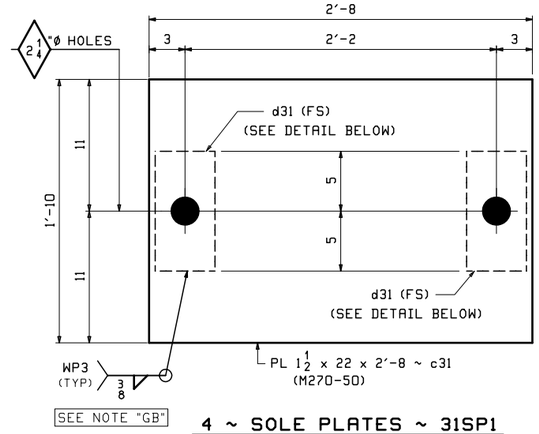

SEE NOTE "GB"

4 ~ SOLE PLATES ~ 31SP1

(@ FIXED BEARING)

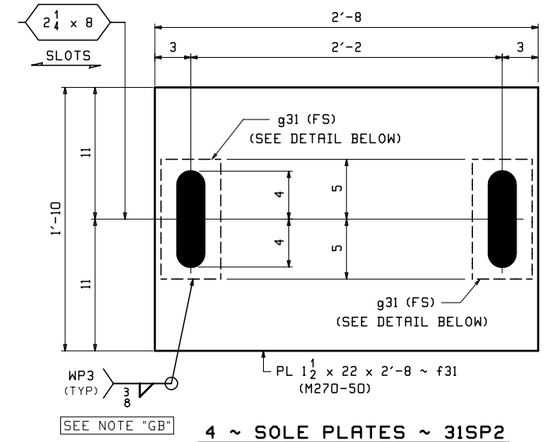

SEE NOTE "GB"

4 ~ SOLE PLATES ~ 31SP2

(@ EXPANSION BEARING)

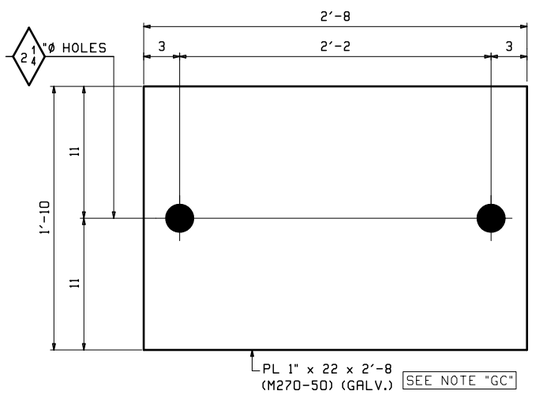

8 ~ MASONRY PLATES ~ 31MP1

(@ FIXED & EXPANSION BEARING)

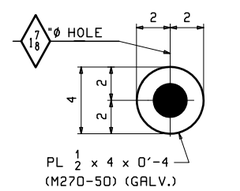

16 ~ PLATES ~ b31

(@ PLATE WASHER)

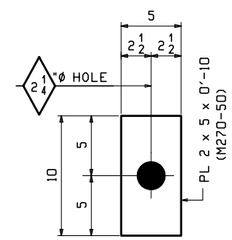

8 ~ PLATES ~ d31

(SHEAR BLOCK @ FIXED BEARING)

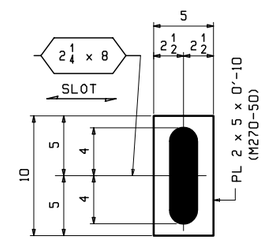

8 ~ PLATES ~ g31

(SHEAR BLOCK @ FIXED BEARING)

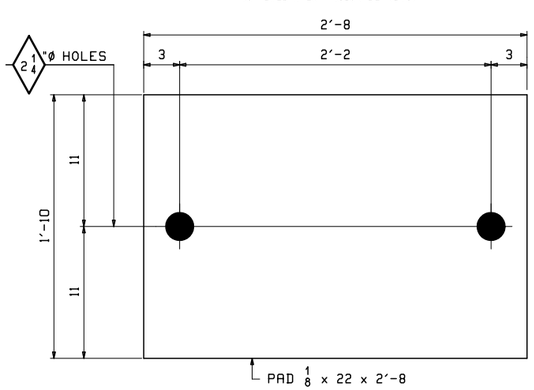

8 ~ PADS ~ 31EP1

(@ FIXED & EXPANSION BEARING)

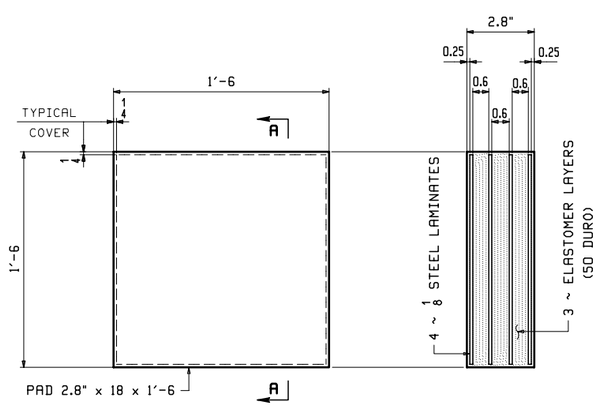

SECTION A-A

8 ~ BEARING PADS ~ 31BP1

(@ FIXED & EXPANSION BEARING)

NOTE "GA"

GALVANIZE ANCHOR BOLTS, HEAVY HEX NUTS & STANDARD BEVELED WASHERS IN ACCORDANCE WITH ASTM A153.

GALVANIZE PLATE WASHERS IN ACCORDANCE WITH ASTM A123.

NOTE "GB"

GALVANIZE SOLE PLATE ASSEMBLY AFTER WELDING SHEAR BLOCK IN ACCORDANCE WITH ASTM A123.

NOTE "GC"

GALVANIZE MASONRY PLATES IN ACCORDANCE WITH ASTM A123.

NOTES:

1. FOR GENERAL NOTES SEE DWG. GN1.

BILL OF MATERIAL

ABM INFO PAGE	ABM INFO LINE	SHIP MARK	QTY	MARK	MATERIAL	LENGTH FT	LENGTH INCHES	REMARKS	WT	PROCUREMENT NOTES
		31AB1	16		ANCHOR BOLTS			SEE NOTE "GA"	21	
7	F		16	a31	1 1/2 Ø ROD	2	7	F1554-GRADE 36 (SWEDGED)	16	
7	G		16	b31	PL 1/2 x 4	0	4		2	
7	H		32		1 1/2 Ø HHN			A563 (GR-A)	1	
7	J		16		BEVEL WASH FOR 1 1/2 Ø HSB			F436	0.26	
		31SP1	4		SOLE PLATES			SEE NOTE "GB"	328	
7	B		4	c31	PL 1 1/2 x 22	2	8		299	
7	C		4	d31	PL 2x5	0	10		28	
		31SP2	4		SOLE PLATES			SEE NOTE "GB"	328	
7	B		4	f31	PL 1 1/2 x 22	2	8		299	
7	C		4	g31	PL 2x5	0	10		28	
					MASONRY PLATES					
7	D	31MP1	8		PL 1x22	2	8	GALV.	200	
					PADS					
7	L	31EP1	8		PAD 1/8 x 22	2	8	NEOPRENE		
					BEARING PADS					
7	N		8	31BP1	PAD 2.8"x18	1	6	50 DURO		

JOB NO. 598 | DRAWING NO. 31 | REV.

REV.	DATE	REMARKS	DWN	CHK	APVL	SHOP
0						

MATERIAL:	SURFACE PREP. & PAINT:	HOLES:	SHOP BOLTS:
AS NOTED	SEE DWG. GN1	AS NOTED	NONE

DESCRIPTION: BEARING DETAILS

CASCO BAY STEEL STRUCTURES, INC.
1 WALLACE AVE.
SOUTH PORTLAND, ME 04106
PHONE (207) 780-6722
FAX. (207) 780-6726
TENSOR 3285

STRUCTURE:	TH-10 OVER OTTER CREEK PONY TRUSS BRIDGE	DRAWN: RB	DATE: 3/29/16
		CHKD: WJL	DATE: 3/29/16
LOCATION:	RUTLAND CITY, VERMONT	JOB NO.	DWG NO.
PROJ NO.	BRF 3000 (19)	598	31
CUSTOMER:	KUBRICKY CONSTRUCTION CORP.		REV. △

WJL Tue, Mar 29, 2016 02:18:30 PM /users/jobs/3285/31.dwg