KUBRICKY CONSTRUCTION CORP.
269 BALLARD ROAD

WILTON, NY 12831
518 792-5864

KUBRICKY CONSTRUCTION CORP.
A PROUD MEMBER OF THE D.A. COLLINS™ COMPANIES
An Equal Opportunity Employer

Rutland City BRF 3000 (2014036)
SUBMITTAL 85.1

Issued 04/15/16
Respond by 04/22/16

To

Timothy Pockette, PE

Topic	BRF3000 Subm 85.1 (19) Ripley Bridge Bearing Shop Drawings R1
Status	For Approval

Message

Tim,
Find attached BRF3000 Subm 85.1 (19) Ripley Bridge Bearing Shop Drawings R1 for approval.

Thanks,
Mike

Courtesy Copy

Volker H.D. Burkowski

From

Mike Martin

Signed by Mike C. Martin Date 04-15-2016

Proceed as Indicated _____ Date _____
Owner Authorized Representative

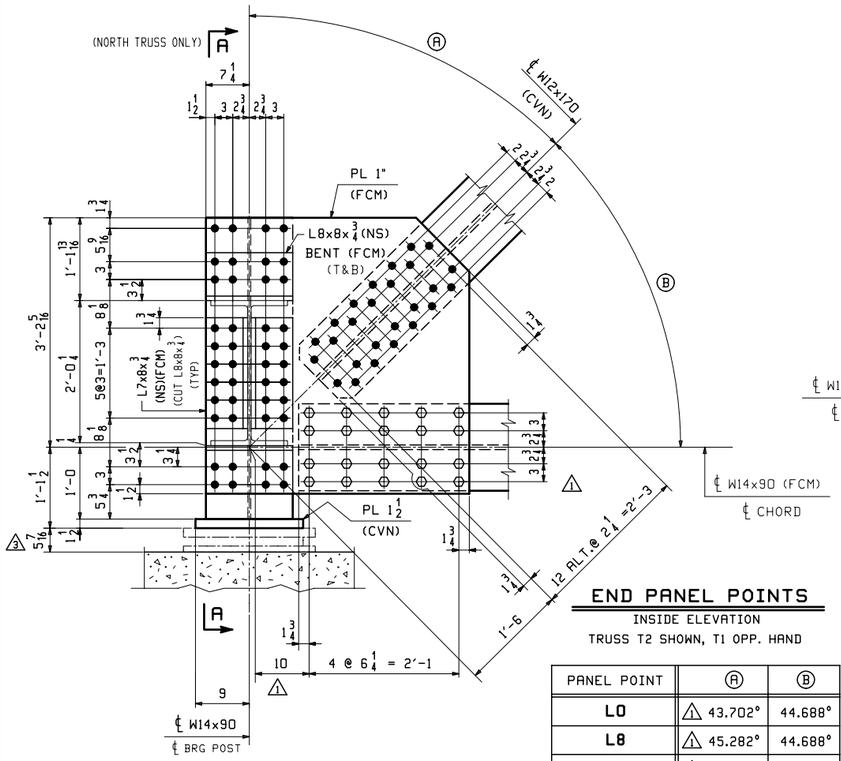

END PANEL POINTS

INSIDE ELEVATION

TRUSS T2 SHOWN, T1 OPP. HAND

PANEL POINT	Ⓐ	Ⓑ
L0	1 43.702°	44.688°
L8	1 45.282°	44.688°
L9	1 44.800°	45.362°
L19	1 42.152°	45.362°

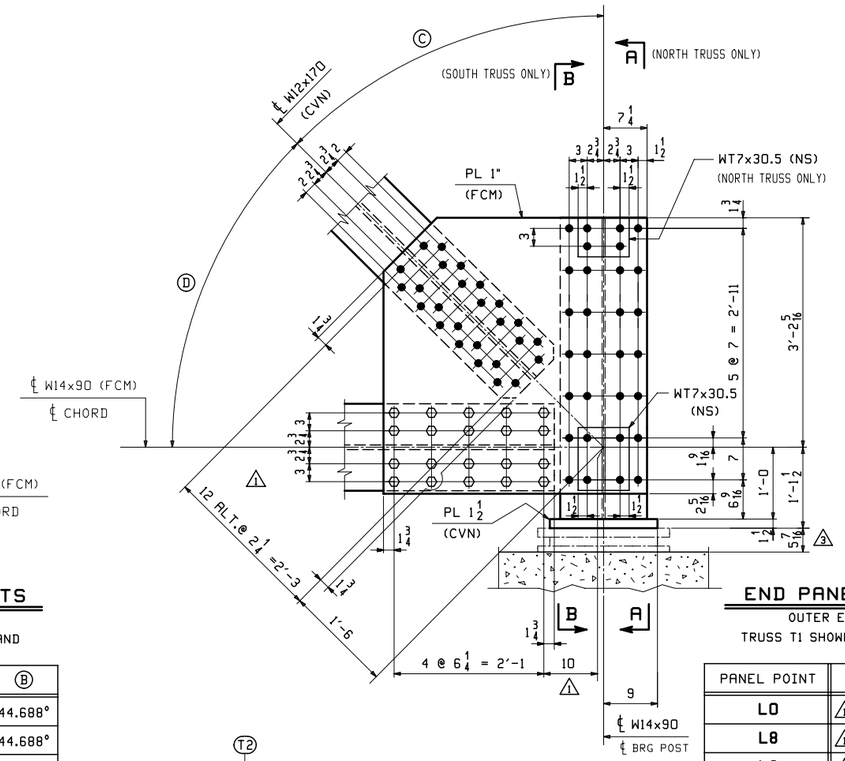

END PANEL POINTS

OUTER ELEVATION

TRUSS T1 SHOWN, T2 OPP. HAND

PANEL POINT	Ⓒ	Ⓓ
L0	1 43.702°	44.688°
L8	1 45.282°	44.688°
L9	1 44.800°	45.362°
L19	1 42.152°	45.362°

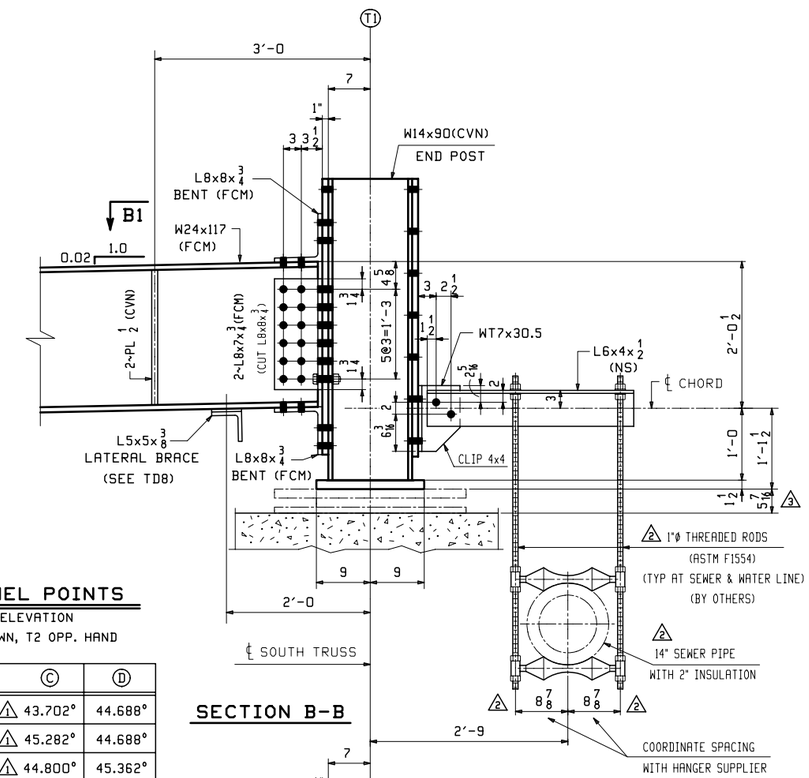

SECTION B-B

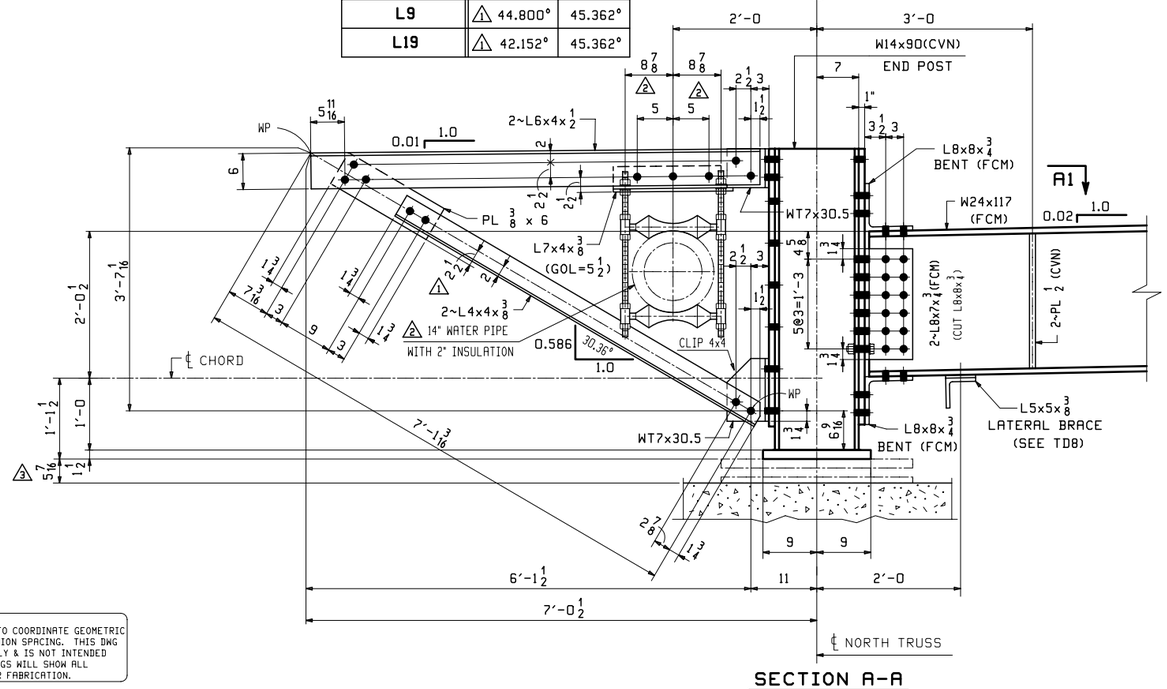

SECTION A-A

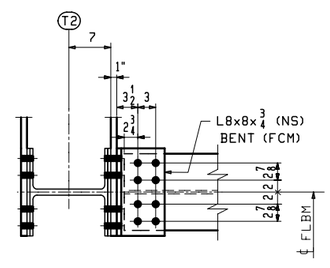

SECTION -A1

(DEVELOPED)

(FLBM TOP FLG SHOWN)

(SECTION @ FLBM BTM FLG SIMILAR)

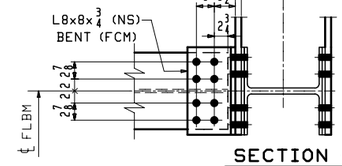

SECTION -B1

(DEVELOPED)

(FLBM TOP FLG SHOWN)

(SECTION @ FLBM BTM FLG SIMILAR)

NOTES:

1. FCM INDICATES FRACTURE CRITICAL MATERIAL, CVN INDICATES CHARPY V-NOTCH TESTED MATERIAL. ALL STEEL (EXCEPT FOR BOLTS) SHALL BE HOT-DIP GALVANIZED AFTER FABRICATION.

2. BOLTS SHALL BE 7/8Ø A325-1 GALV. (UN). ALL BOLTS SHALL BE INSTALLED WITH HEADS EXPOSED TO PUBLIC VIEW WITH ONE HARDENED WASHER AND ONE DTI WASHER. BOLTS AND WASHERS SHALL BE MECHANICALLY GALVANIZED.

3. DUE TO ROLLING MILL TOLERANCE, THE ACTUAL THICKNESS OF FILL PLATES MAY VARY FROM WHAT IS SHOWN ON THIS DWG. THE SHOP WILL BE RESPONSIBLE FOR ADJUSTING FILL THICKNESS AS REQUIRED TO SUIT THE ACTUAL MATERIAL SIZE. FILL PLATES SHALL BE A SINGLE THICKNESS PLATE.

** NOTE **
THE PURPOSE OF THIS DRAWING IS TO COORDINATE GEOMETRIC CONTROL INFORMATION AND CONNECTION SPACING. THIS DWG IS SUBMITTED FOR INFORMATION ONLY & IS NOT INTENDED FOR SHOP FABRICATION. DETAIL DWGS WILL SHOW ALL WELDING AND DIMENSIONS REQ'D FOR FABRICATION.

REV.	DATE	REMARKS	DWN	CHK	APVL	SHOP
3	4/12/16	REVISED DIMENSIONS	RB	WJL		
2	3/3/16	REVISED UTILITY HANGERS	RB	WJL		
1	1/6/16	REVISED DIMENSIONS & ANGLES	RB	WJL		
0						

MATERIAL:	SURFACE PREP. & PAINT:	HOLES:	SHOP BOLTS:
M270-50 (UN)	HOT-DIP GALV.	15/16Ø (UN)	7/8Ø (UN)

DESCRIPTION: TRUSS LAYOUT @ L0, L8, L9 & L19

CASCO BAY STEEL STRUCTURES, INC.
1 WALLACE AVE. SOUTH PORTLAND, ME 04106
PHONE (207) 780-6722 FAX. (207) 780-6726
TENSOR 3285

STRUCTURE: TH-10 OVER OTTER CREEK PONY TRUSS BRIDGE		DRAWN: RB	DATE: 9/28/15
		CHKD: WJL	DATE: 10/13/15
LOCATION:	RUTLAND CITY, VERMONT	JOB NO.	DWG NO.
PROJ NO.	BRF 3000 (19)	598	TD1
CUSTOMER:	KUBRICKY CONSTRUCTION CORP.		REV. 3

WJL Tue, Apr 12, 2016 04:50:37 PM /users/jobs/3285/TD1 - Rev3

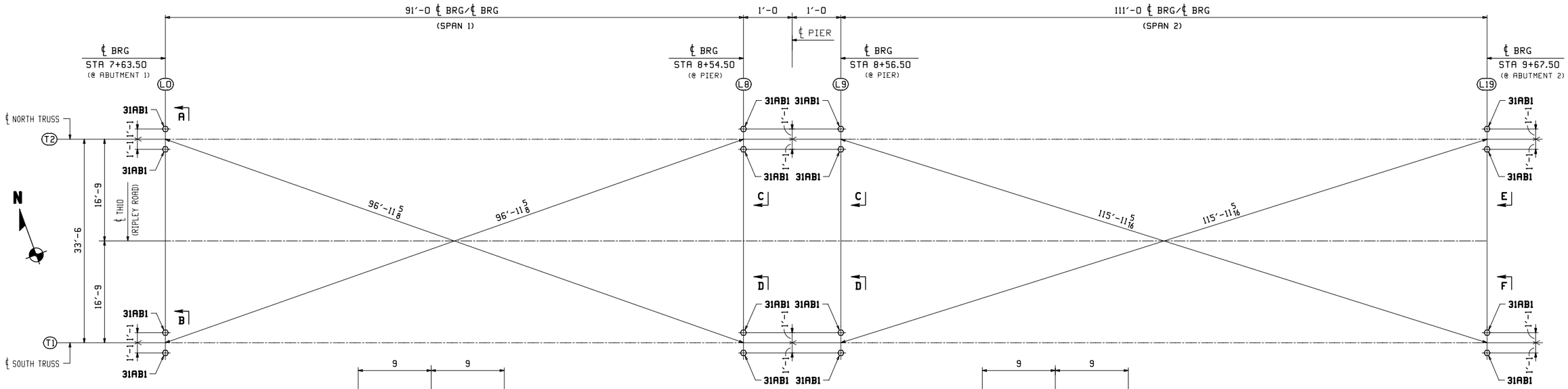

ANCHOR BOLT FRAMING PLAN

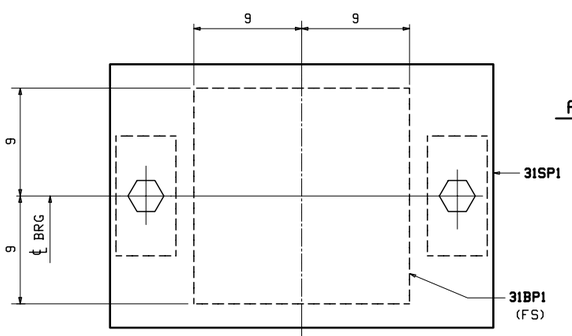

SECTION -AA

(BEARING POST NOT SHOWN FOR CLARITY)

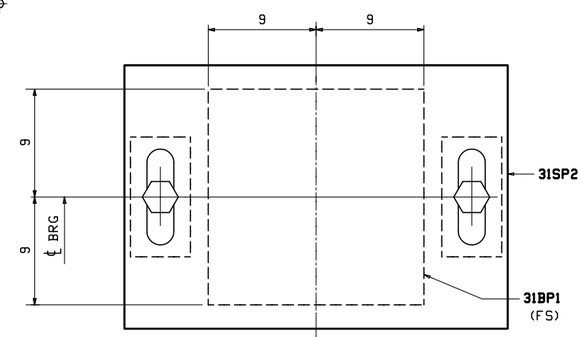

SECTION -BB

(BEARING POST NOT SHOWN FOR CLARITY)

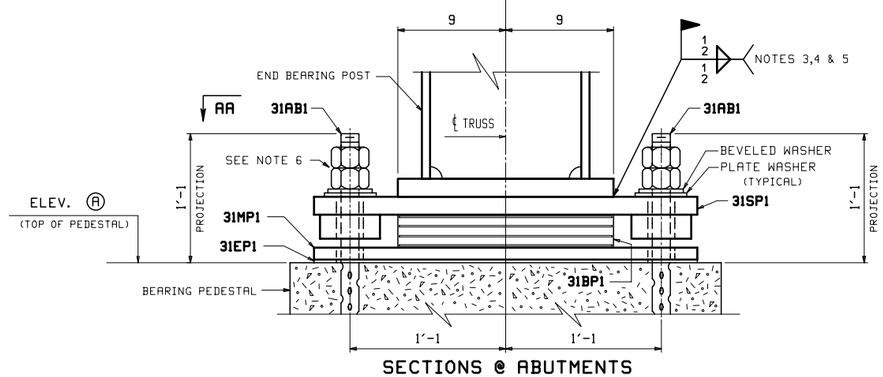

SECTIONS @ ABUTMENTS

(FIXED BEARING)

	SECTION	ELEVATION Ⓐ
(@ ABUT. 1)	A	522.95
(@ ABUT. 1)	B	523.59
(@ ABUT. 2)	E	521.65
(@ ABUT. 2)	F	522.29

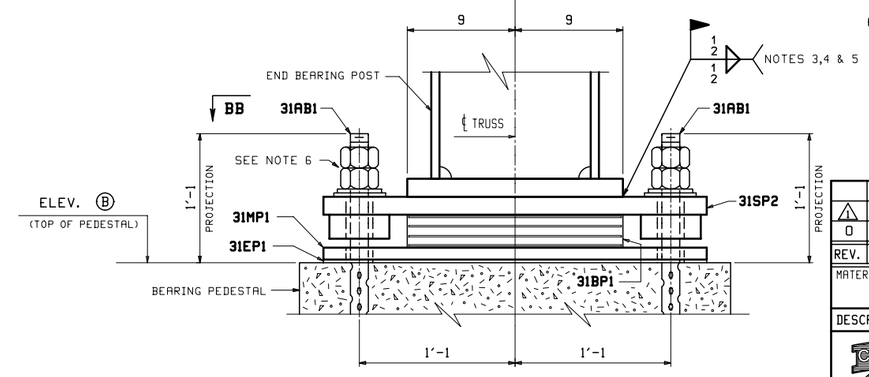

SECTIONS @ PIER

(EXPANSION BEARING)

SECTION	ELEVATION Ⓑ
C	524.20
D	524.84

NOTES:

1. ALL DIMENSIONS ARE GIVEN HORIZONTALLY IN THE FINAL POSITION OF BRIDGE.
2. FOR GENERAL NOTES SEE DWG. GN1.
3. DURING WELDING, SURFACES IN CONTACT WITH THE ELASTOMER SHALL BE RESTRICTED TO 200 DEGREES FAHRENHEIT AND SURFACES IN CONTACT WITH PTFE SHALL BE RESTRICTED TO 300 DEGREES FAHRENHEIT.
4. THE WELDS FOR THE SOLE PLATE CONNECTION SHOULD ONLY BE ALONG THE LONGITUDINAL TRUSS AXIS. TRANSVERSE JOINTS SHOULD BE SEALED WITH AN ACCEPTABLE CAULKING MATERIAL.
5. GALVANIZING THAT HAS BEEN DAMAGED SHALL BE REPAIRED IN ACCORDANCE WITH ASTM A780 STANDARD PRACTICE FOR REPAIR OF DAMAGED HOT DIP GALVANIZED COATINGS, ANNEX A2.
6. ANCHOR BOLTS WITH TWO NUTS SHALL USE THE FOLLOWING PROCEDURE: INSTALL THE LOWER NUT IN CONTACT WITH TOP OF SOLE PLATE AND THEN BACK OFF 1/2 TURN. INSTALL UPPER NUT SNUG TIGHT TO PREVENT LOWER NUT FROM LOOSENING.

REV.	DATE	REMARKS	DWN	CHK	APVL	SHOP
1	4/12/16	REVISED ELEVATIONS	RB	WJL		
0						

MATERIAL: | SURFACE PREP. & PAINT: | HOLES: | SHOP BOLTS:

DESCRIPTION: ANCHOR BOLT FRAMING PLAN & BEARING DETAILS

CASCO BAY STEEL STRUCTURES, INC.
1 WALLACE AVE.
SOUTH PORTLAND, ME 04106
PHONE (207) 780-6722
FAX. (207) 780-6726
TENSOR 3285

STRUCTURE: TH-10 OVER OTTER CREEK PONY TRUSS BRIDGE		DRAWN: RB	DATE: 3/29/16
		CHKD: WJL	DATE: 3/29/16
LOCATION: RUTLAND CITY, VERMONT		JOB NO.	DWG NO.
PROJ NO. BRF 3000 (19)		598	E7
CUSTOMER: KUBRICKY CONSTRUCTION CORP.			REV. 1

WJL Tue, Apr 12, 2016 04:02:46 PM /users/jobs/3285-E7 - Revi