KUBRICKY CONSTRUCTION CORP.
269 BALLARD ROAD

WILTON, NY 12831
518 792-5864

KUBRICKY CONSTRUCTION CORP.
A PROUD MEMBER OF THE D.A. COLLINS™ COMPANIES
An Equal Opportunity Employer

Rutland City BRF 3000 (2014036)
SUBMITTAL 84.0

Issued 03/25/16
Respond by 04/08/16

To

Timothy Pockette, PE

Topic	BRF3000 (19) Expansion Joint Shop Drawings - Ripley Road
Status	For Approval

Message

Tim,
Please see attached Expansion Joint Shop Drawings for Ripley Road for approval.

Thanks,
Mike

Courtesy Copy

Volker H.D. Burkowski

From

MICHAEL MARTIN

Signed by Michael C. Martin Date 03-25-2016

Proceed as Indicated _____ Date _____
Owner Authorized Representative

CASCO BAY STEEL STRUCTURES, INC.
ONE WALLACE AVENUE
SOUTH PORTLAND, Maine 04106
PH: (207) 780-6722 FAX: (207) 780-6726

TRANSMITTAL 598-TR-06

Date: March 25, 2016

Project: Rutland, VT TH-10 Ripley Road Truss
Project No: BRF 3000 (19)
CBSS Project No: 598

To: Mike Martin
Kubricky Construction Group
269 Ballard Road
Wilton, NY 12831

Subject: Expansion Joint Shop Drawings for Approval 1 Set Electronic

Sent Via: Email

Drawings in this submittal: 9 TOTAL
E101, X10-X13, 101-104

Notes:
Expansion joint drawings for approval.

Signed: Andy Carrell
Andy Carrell
Project Manager

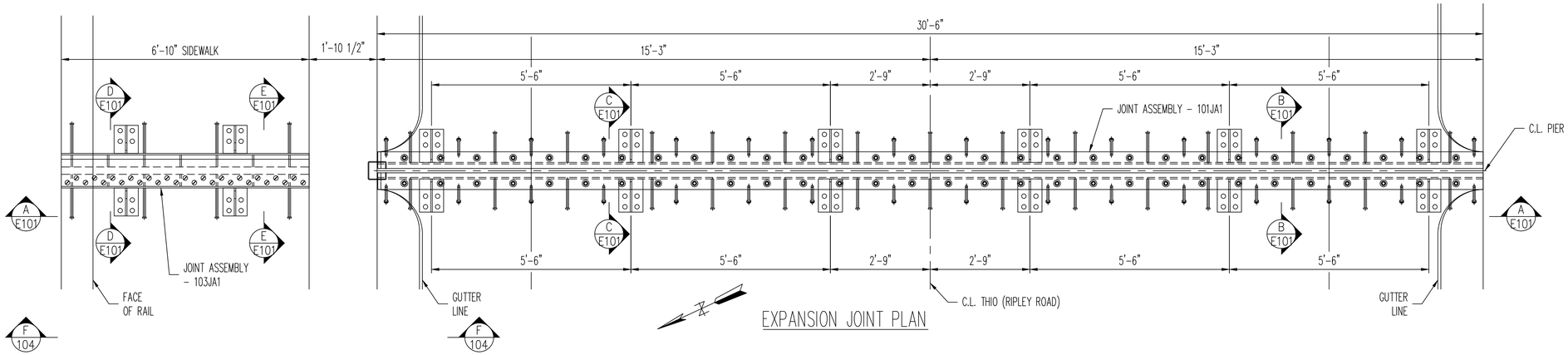

EXPANSION JOINT PLAN

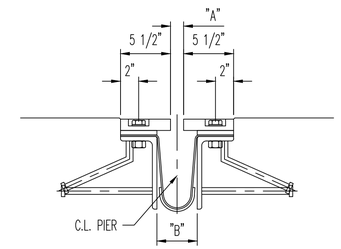

SECTION B-B
ROTATED

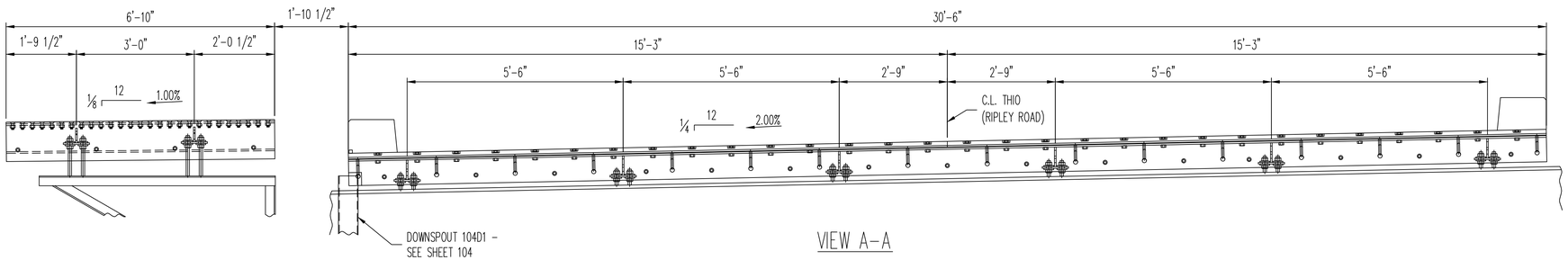

VIEW A-A

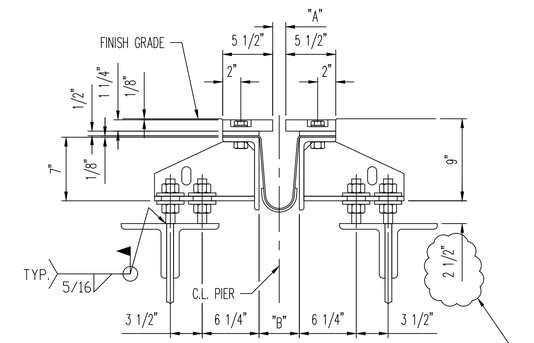

SECTION C-C
ROTATED

TEMP. SETTING CHART		
TEMP °F	DIM "A"	DIM "B"
0	$2\frac{7}{8}$"	$5\frac{1}{8}$"
15°	$1\frac{7}{8}$"	$4\frac{7}{8}$"
30°	$1\frac{5}{8}$"	$4\frac{5}{8}$"
45°	$1\frac{7}{16}$"	$4\frac{7}{16}$"
60°	$1\frac{3}{16}$"	$4\frac{3}{16}$"
75°	$\frac{15}{16}$"	$3\frac{15}{16}$"
90°	$\frac{11}{16}$"	$3\frac{11}{16}$"
105°	$\frac{1}{2}$"	$3\frac{1}{2}$"

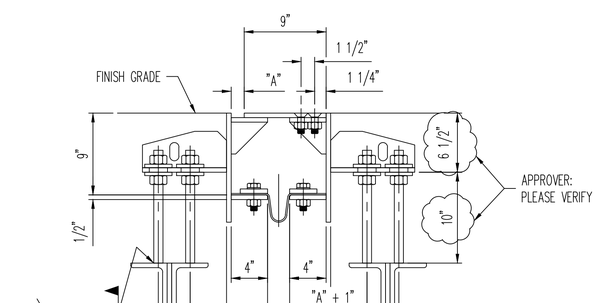

SECTION D-D
ROTATED

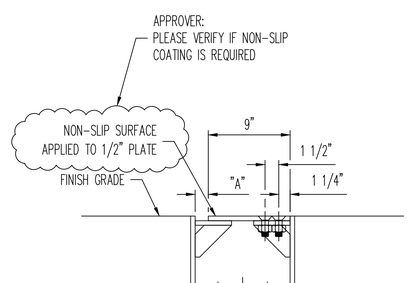

SECTION E-E
ROTATED

NOTES:
- ALL DIMENSIONS SHOWN HORIZONTAL U.N.O.
- ALL DIMENSIONS SHOWN AT 45°.

REV.	DATE	REMARKS	DWN	CHK	APVL	SHOP

MATERIAL:	SURFACE PREP. & PAINT:	HOLES:	SHOP BOLTS:
M270M-250 U.N.O.	GALV. - PER STD. 726.08	AS NOTED	AS NOTED

DESCRIPTION: EXPANION JOINT - FABRICATION SHEET

CASCO BAY STEEL STRUCTURES, INC.
1 WALLACE AVE. PHONE (207) 780-6722
SOUTH PORTLAND, ME 04106 FAX. (207) 780-6726

STRUCTURE:	BRIDGE NO. 17 TH 10 (RIPLEY ROAD) OVER OTTER CREEK STATE OF VERMONT AGENCY OF TRANS.	DRAWN: SLB CHKD: JEB	DATE: 03/23/16 DATE: 03/23/16
LOCATION:	RUTLAND CITY, VT	JOB NO.	DWG NO.
PROJ NO.	BRF 3000(19)	598	E101
CUSTOMER:	KUBRICKY CONSTRUCTION CORP.		REV. 0

3/24/2016 4:32:07 PM, FOR APPROVAL - JB DETAILING

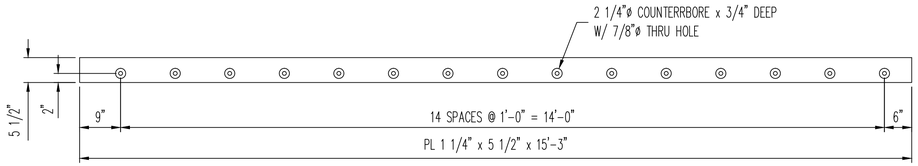

1 ~ x10a

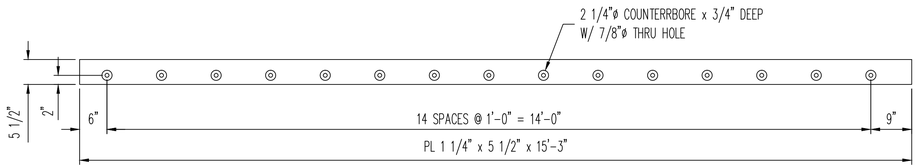

1 ~ x10b

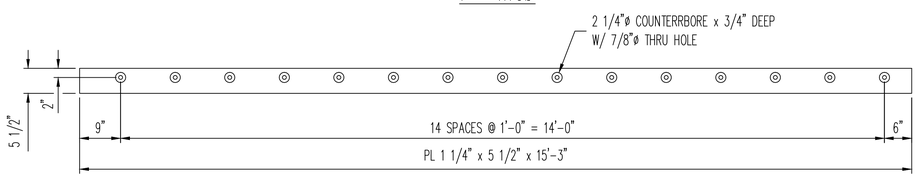

1 ~ x10c

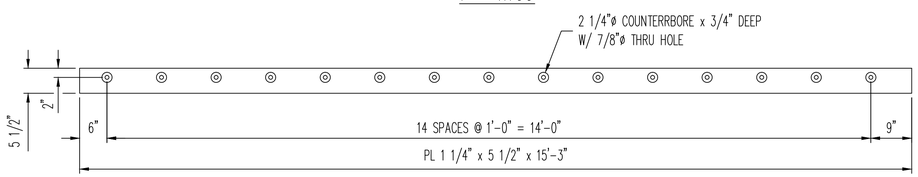

1 ~ x10d

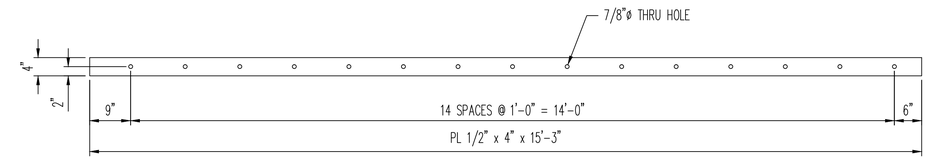

2 ~ x12a
RISER PLATE

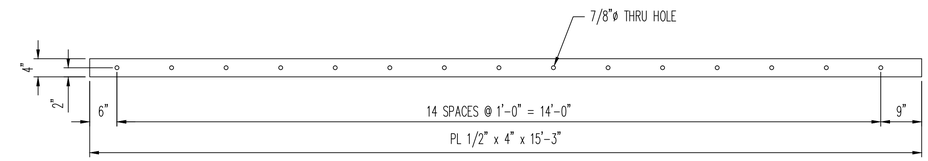

2 ~ x12b
RISER PLATE

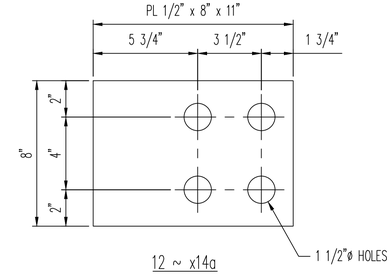

12 ~ x14a

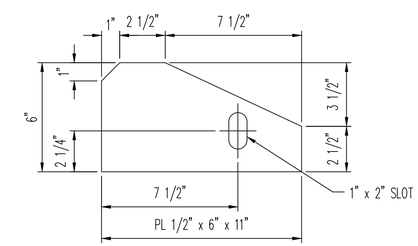

12 ~ x14b

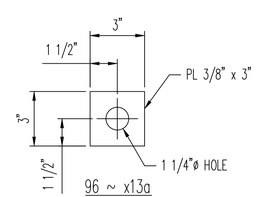

96 ~ x13a

REV.	DATE	REMARKS	DWN	CHK	APVL	SHOP

MATERIAL:	SURFACE PREP. & PAINT:	HOLES:	SHOP BOLTS:
M270M-250 U.N.O.	GALV. - PER STD. 726.08	AS NOTED	AS NOTED

DESCRIPTION: EXPANION JOINT - DETAILS

CASCO BAY STEEL STRUCTURES, INC.
1 WALLACE AVE. PHONE (207) 780-6722
SOUTH PORTLAND, ME 04106 FAX. (207) 780-6726

STRUCTURE:	BRIDGE NO. 17 TH 10 (RIPLEY ROAD) OVER OTTER CREEK	DRAWN: SLB	DATE: 03/23/16
	STATE OF VERMONT AGENCY OF TRANS.	CHKD: JEB	DATE: 03/23/16
LOCATION:	RUTLAND CITY, VT	JOB NO.	DWG NO.
PROJ NO.	BRF 3000(19)	598	X10
CUSTOMER:	KUBRICKY CONSTRUCTION CORP.		REV. 0

3/24/2016 4:44:25 PM, FOR APPROVAL - JB DETAILING

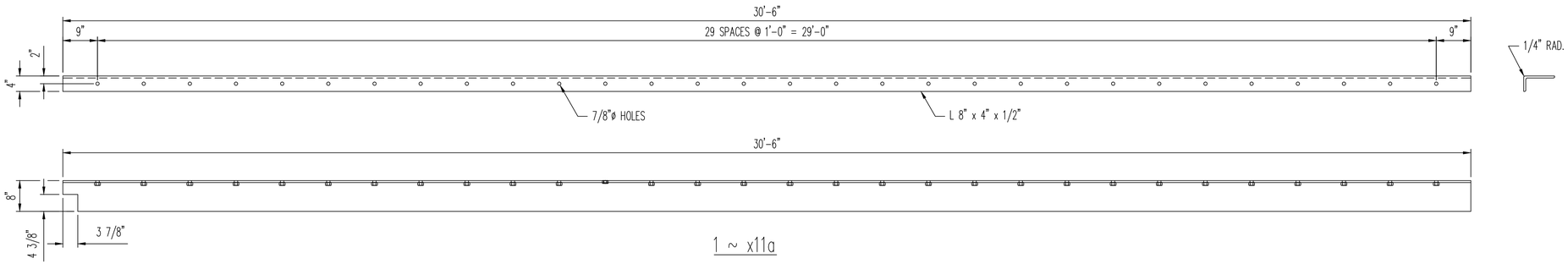

1 ~ x11a

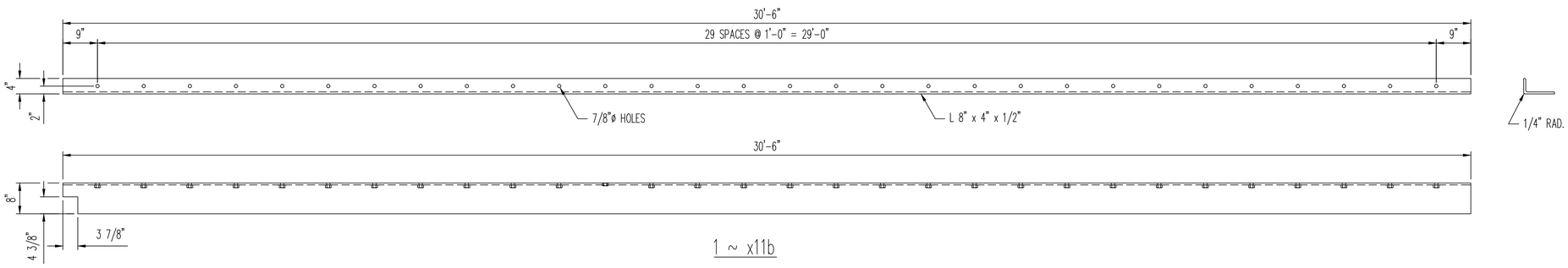

1 ~ x11b

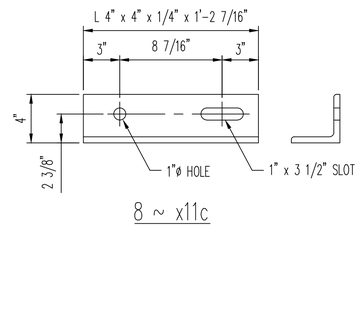

8 ~ x11c

REV.	DATE	REMARKS	DWN	CHK	APVL	SHOP

MATERIAL:	SURFACE PREP. & PAINT:	HOLES:	SHOP BOLTS:
M270M-250 U.N.O.	GALV. - PER STD. 726.08	AS NOTED	AS NOTED

DESCRIPTION: EXPANION JOINT - DETAILS

CASCO BAY STEEL STRUCTURES, INC.
1 WALLACE AVE. PHONE (207) 780-6722
SOUTH PORTLAND, ME 04106 FAX. (207) 780-6726

STRUCTURE:	BRIDGE NO. 17 TH 10 (RIPLEY ROAD) OVER OTTER CREEK STATE OF VERMONT AGENCY OF TRANS.	DRAWN: SLB	DATE: 03/23/16
		CHKD: JEB	DATE: 03/23/16
LOCATION:	RUTLAND CITY, VT	JOB NO.	DWG NO.
PROJ NO.	BRF 3000(19)	598	X11
CUSTOMER:	KUBRICKY CONSTRUCTION CORP.		REV. 0

3/24/2016 4:45:19 PM, FOR APPROVAL – JB DETAILING

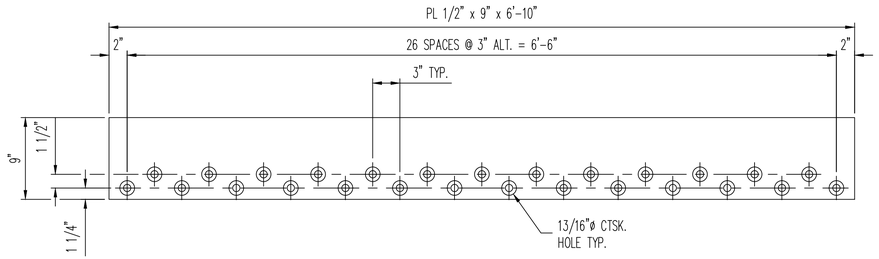

1 ~ x20a

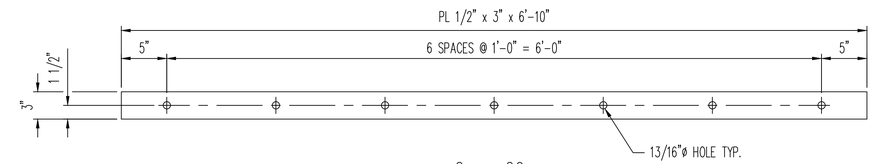

2 ~ x20g

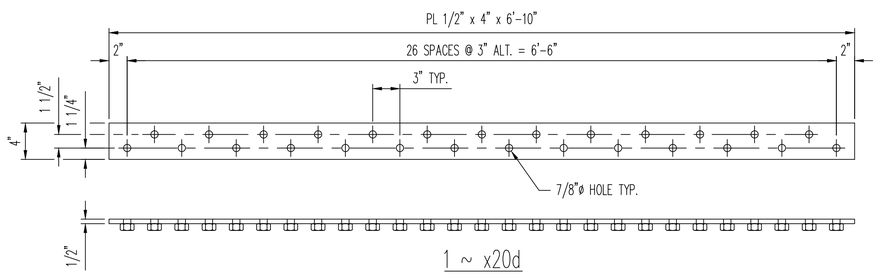

1 ~ x20d

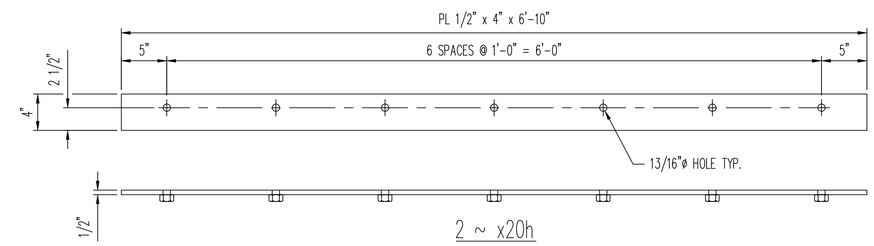

2 ~ x20h

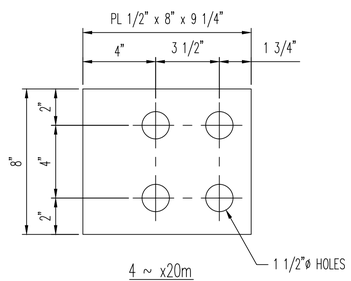

4 ~ x20m

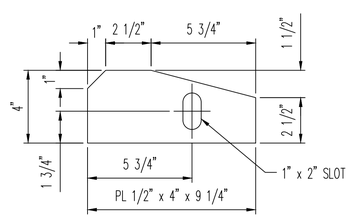

4 ~ x20k

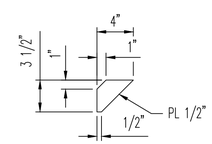

14 ~ x20f

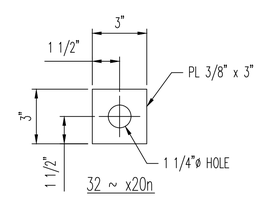

32 ~ x20n

REV.	DATE	REMARKS	DWN	CHK	APVL	SHOP

MATERIAL:	SURFACE PREP. & PAINT:	HOLES:	SHOP BOLTS:
M270M-250 U.N.O.	GALV. - PER STD. 726.08	AS NOTED	AS NOTED

DESCRIPTION: EXPANION JOINT - DETAILS

CASCO BAY STEEL STRUCTURES, INC.
1 WALLACE AVE. PHONE (207) 780-6722
SOUTH PORTLAND, ME 04106 FAX. (207) 780-6726

STRUCTURE:	BRIDGE NO. 17 TH 10 (RIPLEY ROAD) OVER OTTER CREEK STATE OF VERMONT AGENCY OF TRANS.	DRAWN: SLB	DATE: 03/23/16
		CHKD: JEB	DATE: 03/23/16
LOCATION:	RUTLAND CITY, VT	JOB NO.	DWG NO.
PROJ NO.	BRF 3000(19)	598	X12
CUSTOMER:	KUBRICKY CONSTRUCTION CORP.		REV. 0

3/24/2016 4:51:09 PM, FOR APPROVAL — JB DETAILING

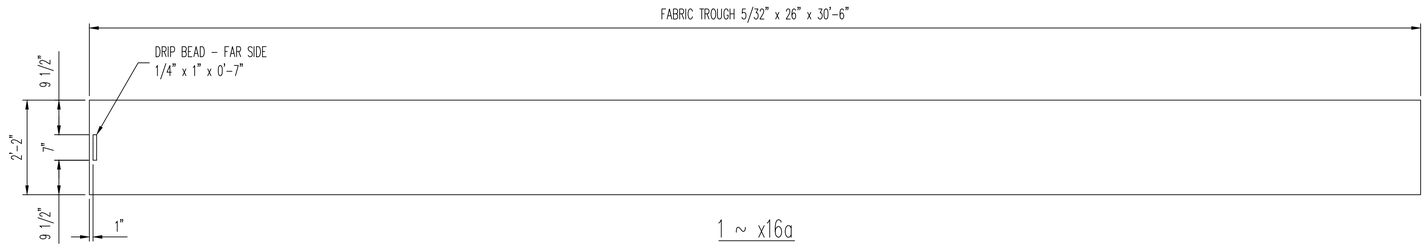

1 ~ x16a

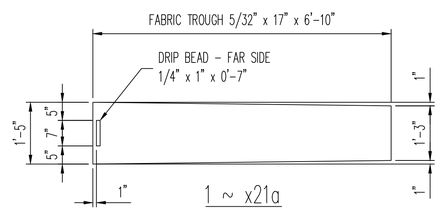

1 ~ x21a

NOTE:
1.) FABRIC TROUGH SHALL BE 3-PLY PREFOREMED FABRIC MATERIAL CONFORMING TO SECTION 707.07 AND SHALL BE CUT PRE-ASSEMBLY FROM ONE PIECE.
2.) DRIP BEAD OF FABRIC MATERIAL SHALL BE CEMENTED TO THE BOTTOM OF THE FABRIC TROUGH.

REV.	DATE	REMARKS	DWN	CHK	APVL	SHOP

MATERIAL:	SURFACE PREP. & PAINT:	HOLES:	SHOP BOLTS:
M270M-250 U.N.O.	GALV. - PER STD. 726.08	AS NOTED	AS NOTED

DESCRIPTION: EXPANION JOINT - DETAILS

CASCO BAY STEEL STRUCTURES, INC.
1 WALLACE AVE. PHONE (207) 780-6722
SOUTH PORTLAND, ME 04106 FAX. (207) 780-6726

STRUCTURE:	BRIDGE NO. 17 TH 10 (RIPLEY ROAD) OVER OTTER CREEK STATE OF VERMONT AGENCY OF TRANS.	DRAWN: SLB	DATE: 03/23/16
		CHKD: JEB	DATE: 03/23/16
LOCATION:	RUTLAND CITY, VT	JOB NO.	DWG NO.
PROJ NO.	BRF 3000(19)	598	X13
CUSTOMER:	KUBRICKY CONSTRUCTION CORP.		REV. 0

3/24/2016 4:52:13 PM, FOR APPROVAL - JB DETAILING

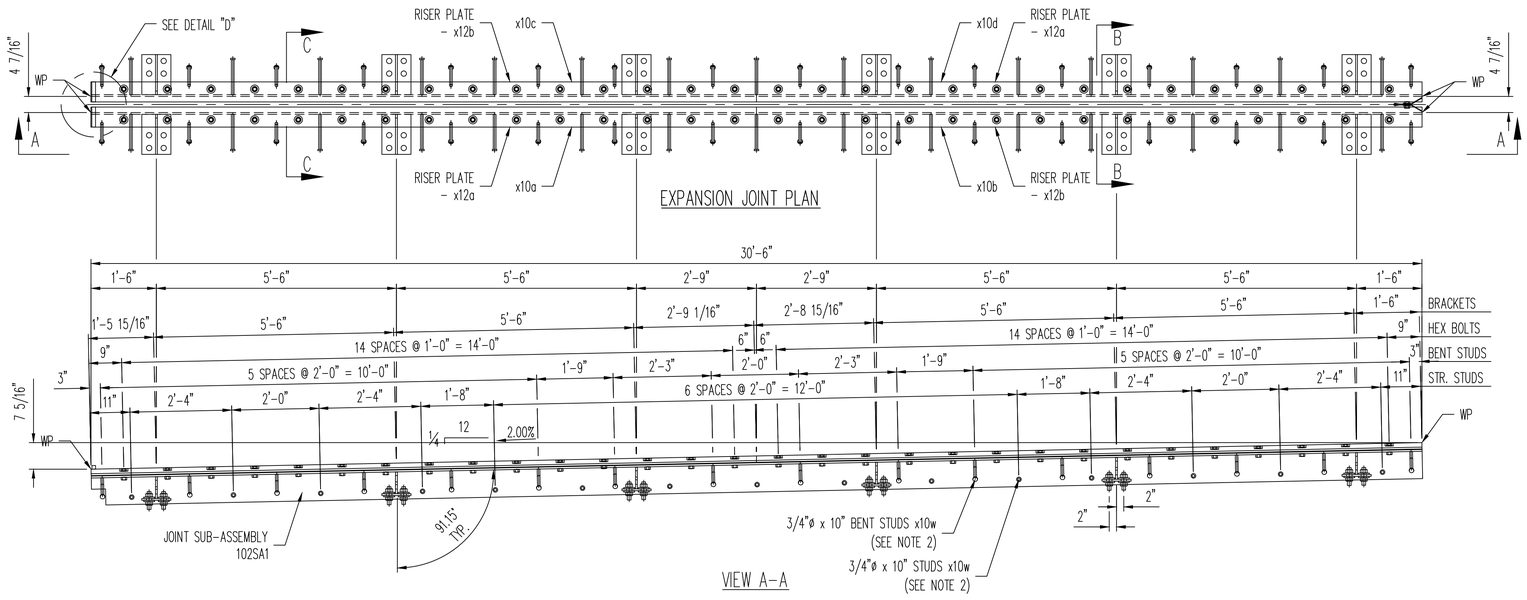

1 ~ EXPANSION JOINT ASSEMBLY ~ 101JA1

BILL OF MATERIAL

BLOCK QTY.	BLOCK NO.		MARK	NO. PCS	SHAPE	LENGTH FT	LENGTH IN		REMARKS	
		1	101JA1	ONE	PLATE JOINT	30	6		GALV	
		2	x10a	1	PL 1¼ X 5½	15	3		GALV	
		3	x10b	1	PL 1¼ X 5½	15	3		GALV	
		4	x10c	1	PL 1¼ X 5½	15	3		GALV	
		5	x10d	1	PL 1¼ X 5½	15	3		GALV	
		6	x11a	1	L8 X 4 X ½	30	6		GALV	
		7	x11b	1	L8 X 4 X ½	30	6		GALV	
		8	x11c	8	L4 X 4 X ¼	1	2 7/16		GALV	
		9	x12a	2	PL ½ X 4	15	3		GALV	
		10	x12b	2	PL ½ X 4	15	3		GALV	
		11	x13a	96	PL ⅜ X 3	0	3		GALV	
		12	x14a	12	PL ½ X 8	0	11		GALV	
		13	x14b	12	PL ½ X 6	0	11		GALV	
		14	x15a	2	PL 1 X 1	0	5½		GALV	
		15	x16a	1	NP 5/32 X 26	30	6		FABRIC TROUGH	
		16	x10w	62	¾ DIA STUD	0	10		HEADED STUD	
		17	m1	2	1/16 X 3 TAPE	30	6		AASHTO M198	
		18	m2	60	¾ DIA GALV BOLTS	0	3		W/ NUT & WASHER	
		19	m3	16	¾ DIA GALV BOLTS	0	3½		W/ NUT & WASHER	
		20	m4	1	¾ DIA GALV BOLTS	0	1		W/ NUT & 2-WASHERS	
		21	1m1	20	1"ø THRD. RODS	0	6		W/ 2-NUTS	
		22								

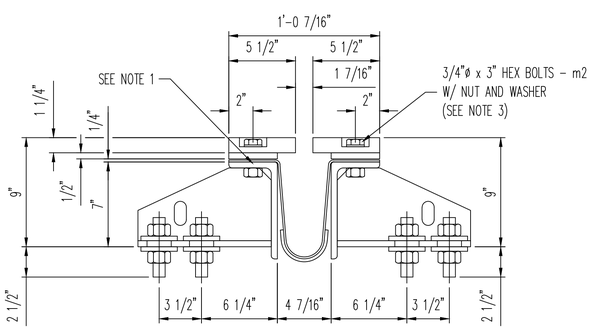

SECTION B-B
ROTATED

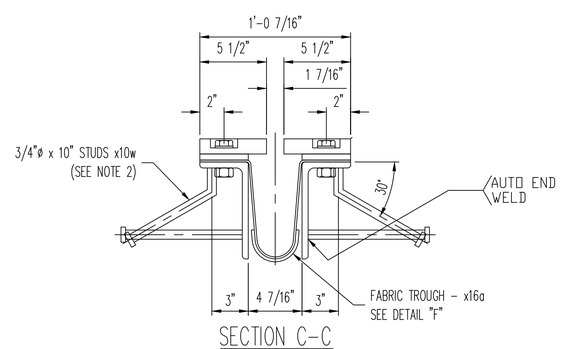

SECTION C-C
ROTATED

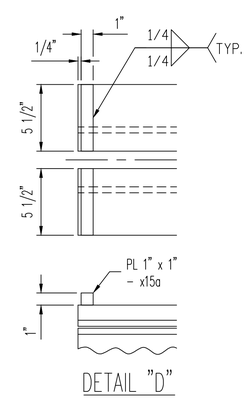

DETAIL "D"

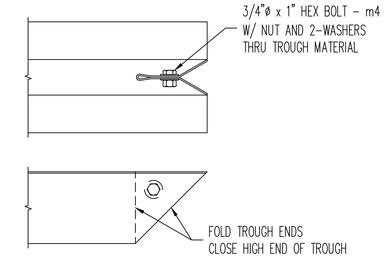

DETAIL "F"
JOINT STEEL NOT SHOWN FOR CLARITY

NOTE:
1.) 1/16" x 3" BUTYL RUBBER TAPE MK m1 PER AASHTO M198 CENTERED ON EACH LINE OF BOLTS AND PLACED BETWEEN ANGLE AND FABRIC.
2.) STUDS WELDED AT 2'-0" O.C. BENT AS SHOWN ALTERNATE STRAIGHT STUDS AT 2'-0" O.C.
3.) WELD NUTS UNDERNEATH ON (3) SIDES COAT BOLT & NUT THREADS WITH NICKEL BASED NEVER SEIZE LUBE.

REV.	DATE	REMARKS	DWN	CHK	APVL	SHOP

MATERIAL:	SURFACE PREP. & PAINT:	HOLES:	SHOP BOLTS:
M270M-250 U.N.O.	GALV. - PER STD. 726.08	AS NOTED	AS NOTED

DESCRIPTION: EXPANION JOINT - ERECTION SHEET

CASCO BAY STEEL STRUCTURES, INC.
1 WALLACE AVE. PHONE (207) 780-6722
SOUTH PORTLAND, ME 04106 FAX. (207) 780-6726

STRUCTURE:	BRIDGE NO. 17 TH 10 (RIPLEY ROAD) OVER OTTER CREEK STATE OF VERMONT AGENCY OF TRANS.	DRAWN: SLB	DATE: 03/23/16
		CHKD: JEB	DATE: 03/23/16
LOCATION:	RUTLAND CITY, VT	JOB NO.	DWG NO.
PROJ NO.	BRF 3000(19)	598	101
CUSTOMER:	KUBRICKY CONSTRUCTION CORP.		REV. 0

3/24/2016 4:38:53 PM, FOR APPROVAL - JB DETAILING

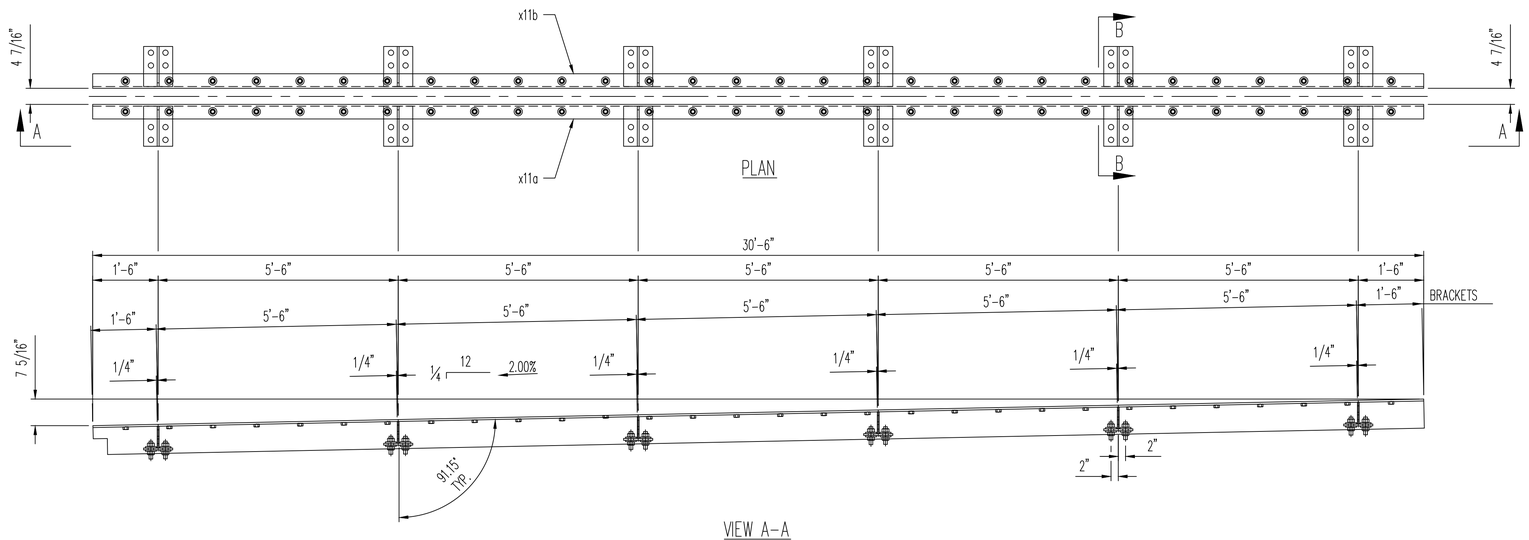

VIEW A-A

1 ~ LOWER JOINT SUB-ASSEMBLY ~ 102SA1

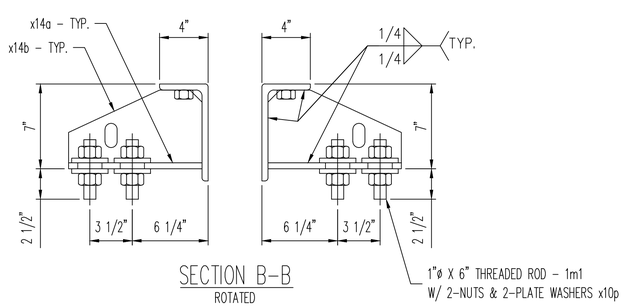

SECTION B-B
ROTATED

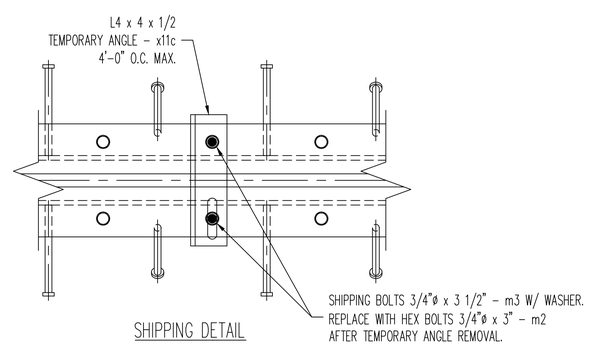

SHIPPING DETAIL

REV.	DATE	REMARKS	DWN	CHK	APVL	SHOP

MATERIAL:	SURFACE PREP. & PAINT:	HOLES:	SHOP BOLTS:
M270M-250 U.N.O.	GALV. - PER STD. 726.08	AS NOTED	AS NOTED

DESCRIPTION: EXPANION JOINT - ERECTION SHEET

CASCO BAY STEEL STRUCTURES, INC.
1 WALLACE AVE. PHONE (207) 780-6722
SOUTH PORTLAND, ME 04106 FAX. (207) 780-6726

STRUCTURE:	BRIDGE NO. 17 TH 10 (RIPLEY ROAD) OVER OTTER CREEK STATE OF VERMONT AGENCY OF TRANS.	DRAWN: SLB	DATE: 03/23/16
		CHKD: JEB	DATE: 03/23/16
LOCATION:	RUTLAND CITY, VT	JOB NO.	DWG NO.
PROJ NO.	BRF 3000(19)	598	102
CUSTOMER:	KUBRICKY CONSTRUCTION CORP.		REV. 0

3/24/2016 4:40:29 PM, FOR APPROVAL - JB DETAILING

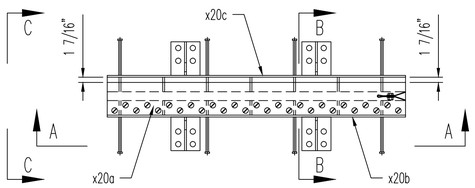

EXPANSION JOINT PLAN

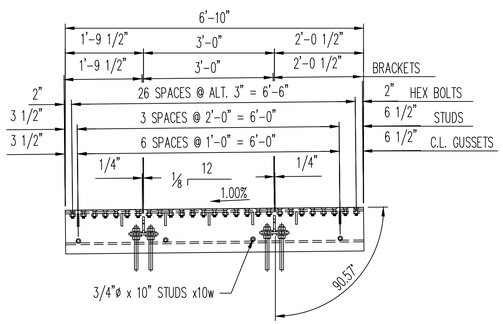

VIEW A-A

1 ~ EXPANSION JOINT ASSEMBLY ~ 103JA1

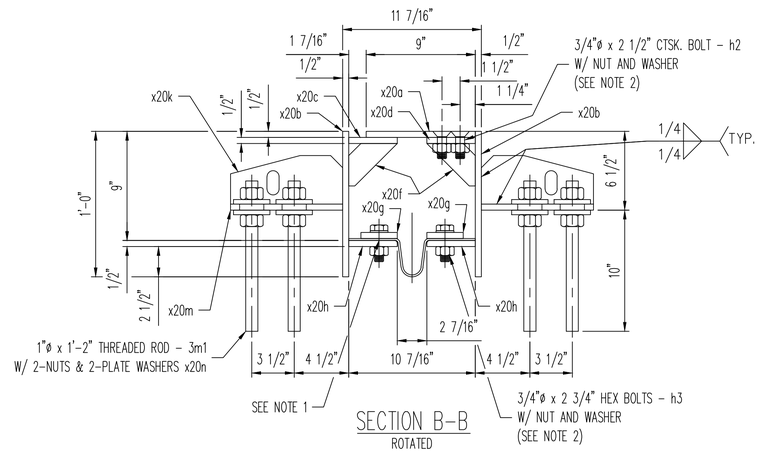

SECTION B-B
ROTATED

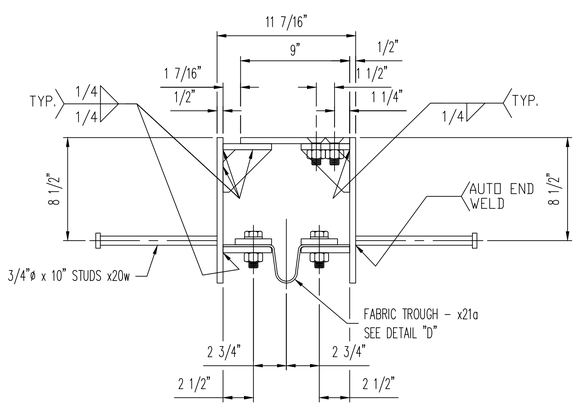

VIEW C-C
ROTATED

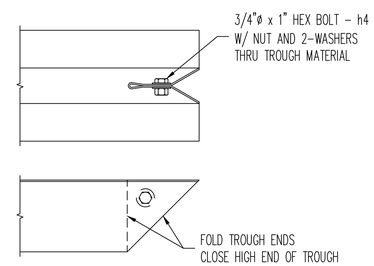

DETAIL "D"
JOINT STEEL NOT SHOWN FOR CLARITY

NOTE:
1.) 1/16" x 3" BUTYL RUBBER TAPE MK h1 PER AASHTO M198 CENTERED ON EACH LINE OF BOLTS AND PLACED BETWEEN PLATE AND FABRIC.
2.) WELD NUTS UNDERNEATH ON (3) SIDES COAT BOLT & NUT THREADS WITH NICKEL BASED NEVER SEIZE LUBE.

BILL OF MATERIAL

BLOCK QTY.	BLOCK NO.		MARK	NO. PCS	SHAPE	LENGTH FT	LENGTH IN		REMARKS	
		1	103JA1	ONE	PLATE JOINT	6	10		GALV	
		2	x20a	1	PL ½ X 9	6	10		GALV	
		3	x20b	2	PL ½ X 12	6	10		GALV	
		4	x20c	1	PL ½ X 4	6	10		GALV	
		5	x20d	1	PL ½ X 4	6	10		GALV	
		6	x20f	14	PL ½ X 3½	0	4		GALV	
		7	x20g	2	PL ½ X 3	6	10		GALV	
		8	x20h	2	PL ½ X 4	6	10		GALV	
		9	x20k	4	PL ½ X 4	0	9¼		GALV	
		10	x20m	4	PL ½ X 8	0	9¼		GALV	
		11	x20n	32	PL ⅜ X 3	0	3		GALV	
		12	x21a	1	NP 5/32 X 17	6	10		FABRIC TROUGH	
		13	x20w	8	¾ DIA STUD	0	10		HEADED STUD	
		14	h1	2	1/16 X 3 TAPE	6	10		AASHTO M198	
		15	h2	27	¾ DIA GALV BOLTS	0	2½		CTSK HEAD W/ NUT	
		16	h3	14	¾ DIA GALV BOLTS	0	2¾		W/ NUT & WASHER	
		17	h4	1	¾ DIA GALV BOLTS	0	1		W/ NUT & 2-WASHERS	
		18	3m1	16	1"ø THRD. RODS	1	2		W/ 2-NUTS	
		19								
		20								

REV.	DATE	REMARKS	DWN	CHK	APVL	SHOP

MATERIAL:	SURFACE PREP. & PAINT:	HOLES:	SHOP BOLTS:
M270M-250 U.N.O.	GALV. - PER STD. 726.08	AS NOTED	AS NOTED

DESCRIPTION: EXPANION JOINT - ERECTION SHEET

CASCO BAY STEEL STRUCTURES, INC.
1 WALLACE AVE. PHONE (207) 780-6722
SOUTH PORTLAND, ME 04106 FAX. (207) 780-6726

STRUCTURE: BRIDGE NO. 17
TH 10 (RIPLEY ROAD) OVER OTTER CREEK
STATE OF VERMONT AGENCY OF TRANS.

DRAWN:	DATE:
SLB	03/23/16
CHKD:	DATE:
JEB	03/23/16

LOCATION:	RUTLAND CITY, VT	JOB NO.	DWG NO.
PROJ NO.	BRF 3000(19)	598	103
CUSTOMER:	KUBRICKY CONSTRUCTION CORP.		REV. 0

3/24/2016 4:42:19 PM, FOR APPROVAL - JB DETAILING

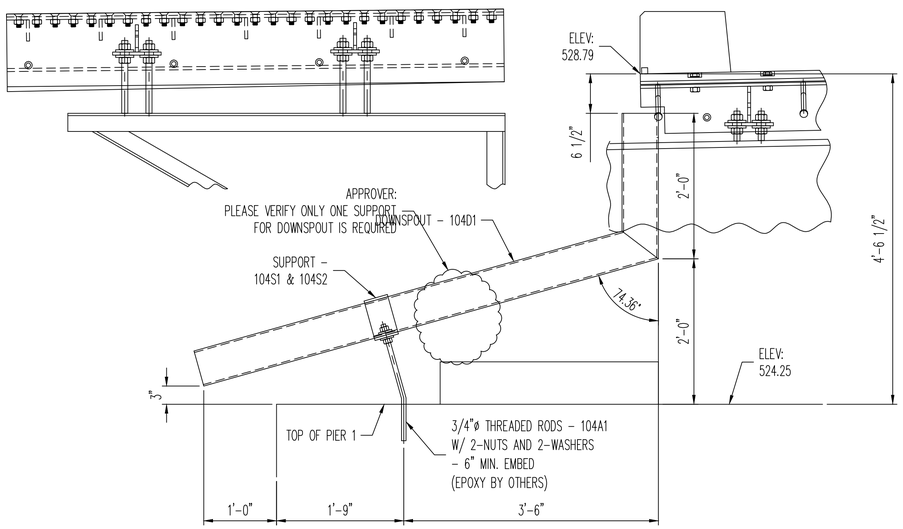

SECTION F-F
(SHEET E101)

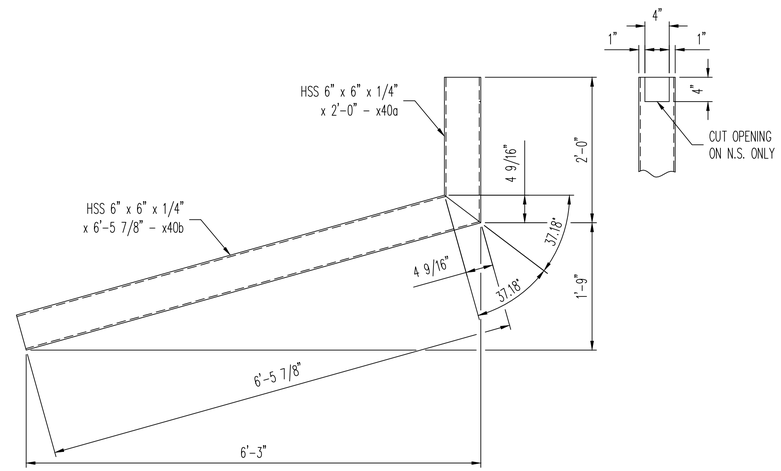

1 - DOWNSPOUT - 104D1

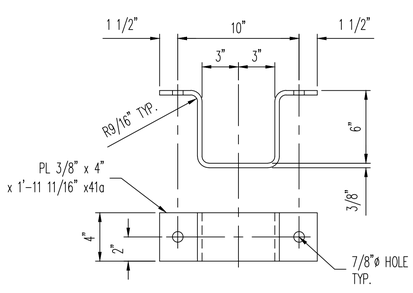

1 - SUPPORT - 104S1

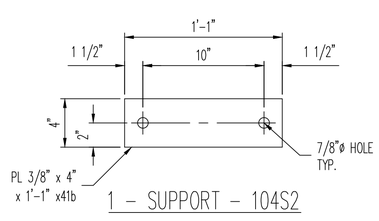

1 - SUPPORT - 104S2

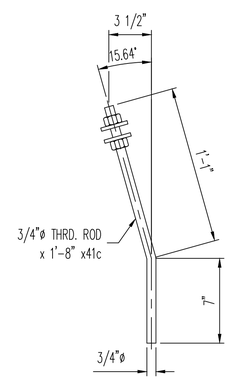

1 - ANCHOR - 104A1

BILL OF MATERIAL

BLOCK QTY.	BLOCK NO.		MARK	NO. PCS	SHAPE	LENGTH FT	LENGTH IN		REMARKS	
		1	104D1	ONE	DOWNSPOUT	8	5		GALV	
		2	x40a	1	HSS 6 X 6 X ¼	2	0		A500B	
		3	x40b	1	HSS 6 X 6 X ¼	6	5⅞		A500B	
		4								
		5	104S1	ONE	SUPPORT	1	1		GALV	
		6	x41a	1	PL ⅜ x 4	1	11 11/16		GALV	
		7								
		8	104S2	ONE	SUPPORT	1	1		GALV	
		9	x41b	1	PL ⅜ x 4	1	1		GALV	
		10								
		11	104A1	ONE	ANCHOR ROD	1	8			
		12	x41c	2	¾" THRD. RODS	1	8		W 2-NUTS & 2-WASHERS	
		13								
		14								
		15								
		16								
		17								
		18								
		19								
		20								

REV.	DATE	REMARKS	DWN	CHK	APVL	SHOP

MATERIAL:	SURFACE PREP. & PAINT:	HOLES:	SHOP BOLTS:
M270M-250 U.N.O.	GALV. - PER STD. 726.08	AS NOTED	AS NOTED

DESCRIPTION: EXPANION JOINT - DOWNSPOUT

CASCO BAY STEEL STRUCTURES, INC.
1 WALLACE AVE. PHONE (207) 780-6722
SOUTH PORTLAND, ME 04106 FAX. (207) 780-6726

STRUCTURE:	BRIDGE NO. 17 TH 10 (RIPLEY ROAD) OVER OTTER CREEK STATE OF VERMONT AGENCY OF TRANS.	DRAWN: SLB	DATE: 03/23/16
		CHKD: JEB	DATE: 03/23/16
LOCATION:	RUTLAND CITY, VT	JOB NO.	DWG NO.
PROJ NO.	BRF 3000(19)	598	104
CUSTOMER:	KUBRICKY CONSTRUCTION CORP.		REV. 0

3/24/2016 4:43:24 PM, FOR APPROVAL - JB DETAILING