KUBRICKY CONSTRUCTION CORP.
269 BALLARD ROAD

WILTON, NY 12831
518 792-5864

KUBRICKY CONSTRUCTION CORP.
A PROUD MEMBER OF THE D.A. COLLINS™ COMPANIES
An Equal Opportunity Employer

Rutland City BRF 3000 (2014036)
SUBMITTAL 75.2

Issued 01/25/16
Respond by 02/08/16

To

Timothy Pockette, PE

Topic	900.645 Prefabricated Truss Bridge - Fabrication Drawings
Status	For Approval
Spec section	900.645
Responsibility	(19) Ripley Road
Received from submitter	1/22/16
Sent to approver	1/25/16
Required from approver	2/8/16

From

Volker H.D. Burkowski

Signed by _____ Date 1/25/16

Proceed as Indicated _____ Date _____
Owner Authorized Representative

CASCO BAY STEEL STRUCTURES, INC.
ONE WALLACE AVENUE
SOUTH PORTLAND, Maine 04106
PH: (207) 780-6722 FAX: (207) 780-6726

TRANSMITTAL 598-TR-04

Date: January 22, 2016

Project: Rutland, VT TH-10 Ripley Road Truss
Project No: BRF 3000 (19)
CBSS Project No: 598

To: Mike Martin
Kubricky Construction Group
269 Ballard Road
Wilton, NY 12831

Subject:	Structural Steel Shop Drawings for Approval	1 Set	Electronic

Sent Via: Email

Drawings in this submittal: 67 TOTAL

GN1, WS1-WS3, TD1-TD8, E1-E6, C1, SA1, SA2, X1-X8, 1-3. 4AC-4C, 5AC-5C, 6AC-C, 7AC-C, 8-30

Notes:

Structural steel drawings for approval.

Drawings noted Revision 1 have been REVISED as noted. Destroy previous copies.

Signed: 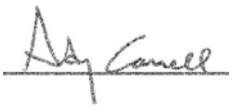

Andy Carrell
Project Manager

GENERAL NOTES

CONSTRUCTION SPECIFICATIONS

1. ALL MATERIAL AND WORKMANSHIP TO BE IN ACCORDANCE WITH THE STATE OF VERMONT AGENCY OF TRANSPORTATION STANDARD SPECIFICATIONS FOR CONSTRUCTION DATED 2006 WITH LATEST REVISIONS AND THE AASHTO LRFD BRIDGE CONSTRUCTION SPECIFICATIONS FOR HIGHWAY BRIDGES 4th EDITION WITH INTERIMS THROUGH 2010.
2. THE PREFABRICATED STEEL TRUSS BRIDGE FOR THIS PROJECT SHALL MEET THE SPECIFICATION REQUIREMENTS FOR ITEM 900.645 SPECIAL PROVISIONS (PREFABRICATED TRUSS BRIDGE). THE TRUSS SHALL BE DESIGNED, DETAILED, FABRICATED AND TRANSPORTED TO THE SITE AND ERECTED BY THE FABRICATOR/CONTRACTOR.

MATERIAL SPECIFICATIONS

1. ALL STEEL SHALL BE AASHTO M270 GRADE 50 AND SHALL BE GALVANIZED PER SUBSECTION 506.15.
2. MATERIAL NOTED "T2" OR CVN ON DETAIL DRAWINGS SHALL BE CHARPY V-NOTCH TESTED IN ACCORDANCE WITH THE REQUIREMENTS OF VERMONT STANDARD SPECIFICATIONS SECTION 714.01.
3. MATERIAL NOTED "F2" OR FCM (FRACTURE CRITICAL MEMBERS) ON DETAIL DRAWINGS SHALL MEET THE FOLLOWING CONSTRUCTION AND TESTING REQUIREMENTS:
   A. ALL FRACTURE CRITICAL MEMBERS SHALL BE FABRICATED ACCORDING TO SECTION 12 OF THE AASHTO/AWS D1.5 BRIDGE WELDING CODE.
   B. ALL FRACTURE CRITICAL MEMBERS SHALL BE FABRICATED IN A PLANT HAVING AN AISC FRACTURE CRITICAL ENDORSEMENT OR THE FABRICATOR SHALL PROVIDE TO THE STRUCTURES ENGINEER AN ACCEPTABLE FRACTURE CONTROL PLAN MEETING THE REQUIREMENTS OF AASHTO/AWS D1.5, PRIOR TO FABRICATION.
   C. ALL FRACTURE CRITICAL MEMBERS SHALL BE IMPACT TESTED TO THE FRACTURE CRITICAL REQUIREMENTS AS SPECIFIED IN AASHTO M270.
4. HIGH STRENGTH BOLTS: ASTM A325 TYPE 1 GALVANIZED PER SECTION 506 (UN).
   NUTS SHALL BE A563 GRADE DH GALVANIZED.
   LOAD INDICATOR WASHERS (LIW) SHALL BE USED AS THE METHOD FOR PRETENSIONING ALL BOLTED TRUSS CONNECTIONS.
   BOLTS & NUTS SHALL BE ROTATIONAL CAPACITY TESTED.
   DO NOT MIX NUTS & BOLTS FROM DIFFERENT CONTAINERS UNLESS ALL BOLTS & NUTS HAVE THE SAME LOT NUMBER.

FABRICATION

1. ALL HOLES SHALL BE DRILLED FULL SIZE (UN).
2. NO FIELD DRILLING, REAMING, OR CUTTING OF TRUSS OR CONNECTION MEMBERS.

WELDING

1. ALL WELDING SHALL CONFORM TO THE PROVISIONS OF SUBSECTION 506.10.
2. NON DESTRUCTIVE TESTING OF WELDS SHALL BE IN ACCORDANCE WITH THE REFERENCED SPECIFICATION.
3. SHEAR CONNECTORS FOR FLOORBEAMS & SIDEWALK TOP STRUTS SHALL BE ATTACHED IN THE SHOP, PRIOR TO GALVANIZING. WELDING AND INSPECTION OF SHEAR CONNECTORS SHALL CONFORM TO THE PROVISIONS OF SECTION 508.
4. SEE DETAIL "WT1" ON THIS DRAWING FOR WELD TERMINATION DETAIL.
5. THE FOLLOWING CASCO WELDING PROCEDURES SHALL BE USED:

WELD DESCRIPTION	MAT'L GRADE	WP	CASCO WELD PROC.
FLOOR BEAM STIFFENER TO WEB FILLET WELDING	M270 GR50	**WP1**	250
FLOOR BEAM STIFFENER TO FLANGE FILLET WELDING	M270 GR50	**WP2**	470 or 480
ALL OTHER FILLET WELDS	M270 GR50	**WP3**	470 or 610
⚠1 TRUSS END POST TO BASE PLATE CJP WELDING (TC-U5b)	M270 GR50	**WP4**	471

SURFACE PREPARATION

1. PRIOR TO GALVANIZING, ALL CORNERS AND EDGES OF STEEL PLATES, SHAPES, ETC., SHALL BE GROUND TO A 1/16" RADIUS.
2. ALL STEEL TO BE GALVANIZED SHALL BE CLEANED TO BE AT LEAST EQUIVALENT TO SURFACE PREPARATION GRADE SSPC-SP8, UNLESS OTHERWISE APPROVED BY THE ENGINEER.

GALVANIZING

1. ALL STEEL SHALL BE HOT DIP GALVANIZED IN ACCORDANCE WITH SUBSECTION 506.15.
2. ALL FAYING SURFACES SHALL BE HAND WIRE BRUSHED, OR BRUSH BLASTED, AFTER GALVANIZING TO ACHIEVE AN AASHTO CLASS C SURFACE CONDITION. NO MECHANICAL OR POWER BRUSHING ALLOWED.
3. BOLT HOLES SHALL BE CLEANED OF GALVANIZATION TO RE-ESTABLISH 15/16" DIA. HOLE.
4. NO FIELD GALVANIZING PERMITTED.

PAINTING

1. ALL STEEL SHALL BE PAINTED AFTER GALVANIZING. PAINT SYSTEM SHALL BE DETERMINED.

FIELD CONNECTIONS

1. ALL FIELD CONNECTIONS SHALL BE MADE WITH 7/8" DIAMETER HIGH STRENGTH A325 TYPE 1 GALVANIZED BOLTS (UN), INSTALLED PER SECTION 506.19(c).
2. BOLTS SHALL HAVE A HEAVY HEX HEAD, ONE HEAVY HEX NUT, ONE LOAD INDICATOR WASHER (LIW), AND AT LEAST ONE FLAT WASHER EACH. WASHER TO BE PLACED UNDER TURNED ELEMENT. SEE "TYPICAL BOLT DETAIL" ON THIS DRAWING.
3. PIECE MARKS WILL BE LOCATED AS SHOWN ON ERECTION DRAWINGS.

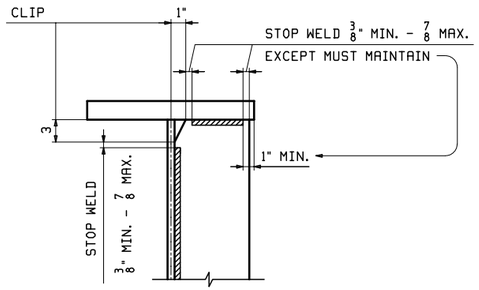

DETAIL "WT1"
STIFFENER WELD TERMINATION

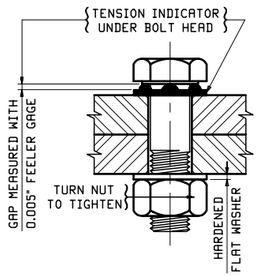

TYPICAL BOLT DETAIL

NOTE TO ENGINEER:
THESE NOTES ARE NOT INTENDED TO BE ALL INCLUSIVE AND COMPLIANCE WITH RELEVANT SPECIFICATIONS REMAIN UNCHANGED.

REV.	DATE	REMARKS	DWN	CHK	APVL	SHOP
⚠1	1/6/16	ADDED WELDING PROCEDURE	RB	WJL		
0						

MATERIAL:	SURFACE PREP. & PAINT:	HOLES:	SHOP BOLTS:

DESCRIPTION: GENERAL NOTES

CASCO BAY STEEL STRUCTURES, INC.
1 WALLACE AVE. PHONE (207) 780-6722
SOUTH PORTLAND, ME 04106 FAX. (207) 780-6726

TENSOR 3285

STRUCTURE: TH-10 OVER OTTER CREEK PONY TRUSS BRIDGE	DRAWN: RB	DATE: 10/7/15	
	CHKD: WJL	DATE: 10/16/15	
LOCATION: RUTLAND CITY, VERMONT	JOB NO.	DWG NO.	
PROJ NO. BRF 3000 (19)	598	GN1	
CUSTOMER: KUBRICKY CONSTRUCTION CORP.		REV. ⚠1	

WJL Fri, Jan 22, 2016 09:24:29 AM /users/jobs/3285/GN1.dwg

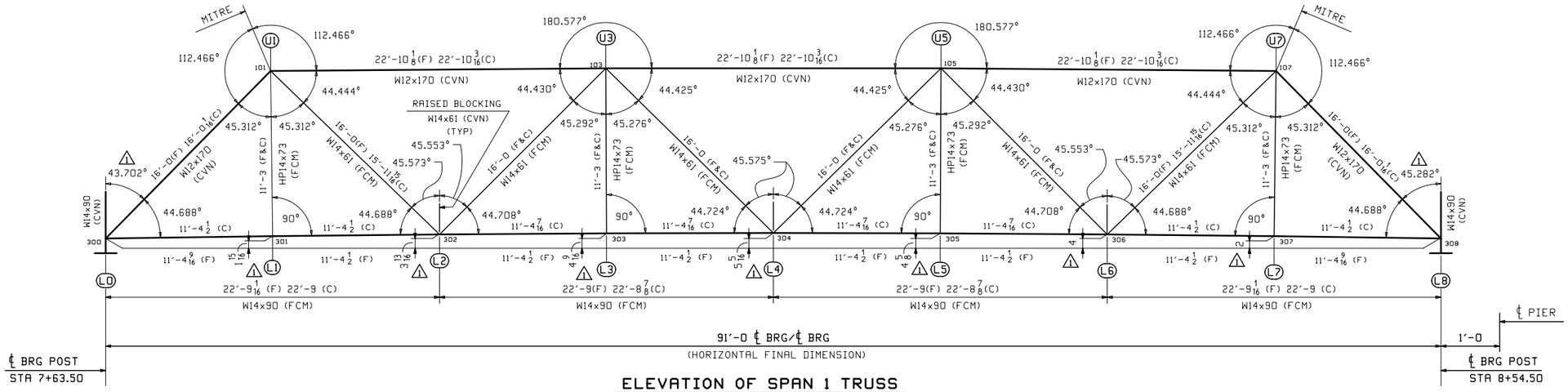

ELEVATION OF SPAN 1 TRUSS

(TRUSS T2 POINTS = T1 POINTS + 100)

(SOUTH TRUSS T1 SHOWN)

(ANGLES & DIMENSIONS FOR NORTH TRUSS T2 ARE THE SAME)

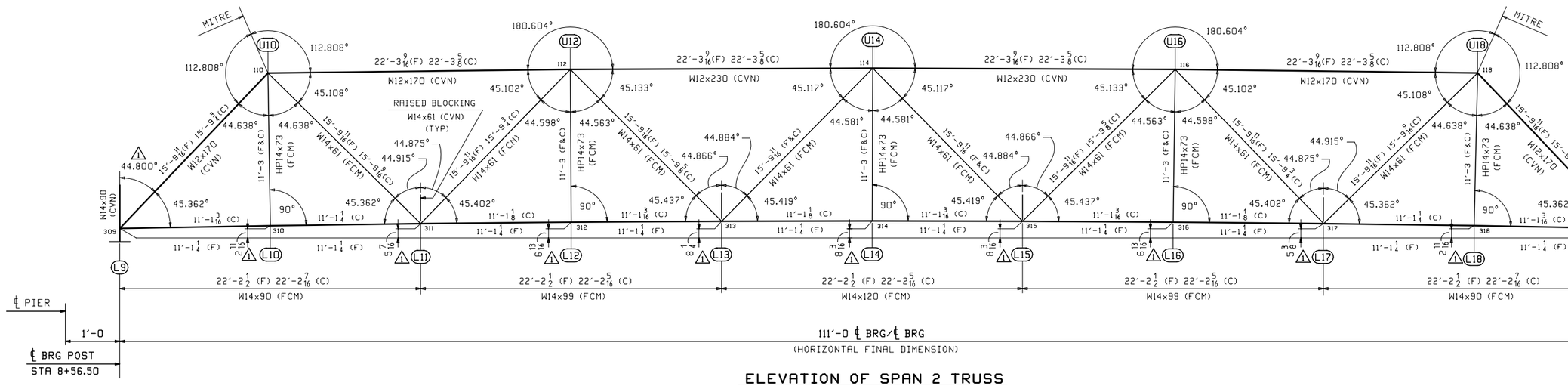

ELEVATION OF SPAN 2 TRUSS

(TRUSS T2 POINTS = T1 POINTS + 100)

(SOUTH TRUSS T1 SHOWN)

(ANGLES & DIMENSIONS FOR NORTH TRUSS T2 ARE THE SAME)

** NOTE **
THE PURPOSE OF THIS DRAWING IS TO COORDINATE GEOMETRIC CONTROL INFORMATION. THIS DWG IS SUBMITTED FOR INFORMATION ONLY AND IS NOT INTENDED FOR SHOP FABRICATION.

NOTES:

1. TRUSS DETAILS SHALL BE BASED ON CAMBERED GEOMETRIC ANGLES AND CAMBERED LENGTHS. CAMBERED LENGTHS ARE NOTED (C), FINAL LENGTHS (F). FINAL LENGTHS ARE SHOWN FOR REFERENCE ONLY, AND SHOULD NOT BE USED FOR DETAILING.
2. ALL TRUSS MEMBER MATERIAL SHALL BE M270-50 W/ FCM & CVN AS NOTED. FRACTURE CRITICAL MEMBERS ARE NOTED (FCM). CHARPY MEMBERS ARE NOTES (CVN).
3. WORK THIS DWG. WITH DWG. WS2 & WS3.

REV.	DATE	REMARKS	DWN	CHK	APVL	SHOP
1	1/6/16	REVISED DIMENSIONS & ANGLES	RB	WL		
0						

MATERIAL:	SURFACE PREP. & PAINT:	HOLES:	SHOP BOLTS:

DESCRIPTION: TRUSS ELEVATION

CASCO BAY STEEL STRUCTURES, INC.
1 WALLACE AVE. PHONE (207) 780-6722
SOUTH PORTLAND, ME 04106 FAX. (207) 780-6726
TENSOR 3285

STRUCTURE: TH-10 OVER OTTER CREEK PONY TRUSS BRIDGE		DRAWN: RB	DATE: 9/25/15
		CHKD: WL	DATE: 9/29/15
LOCATION: RUTLAND CITY, VERMONT		JOB NO. 598	DWG NO. WS1
PROJ NO. BRF 3000 (19)			REV. 1
CUSTOMER: KUBRICKY CONSTRUCTION CORP.			

ML Wed, Jan 6, 2016 01:37:40 PM J:\work\jobs\3285-WS1.dwg

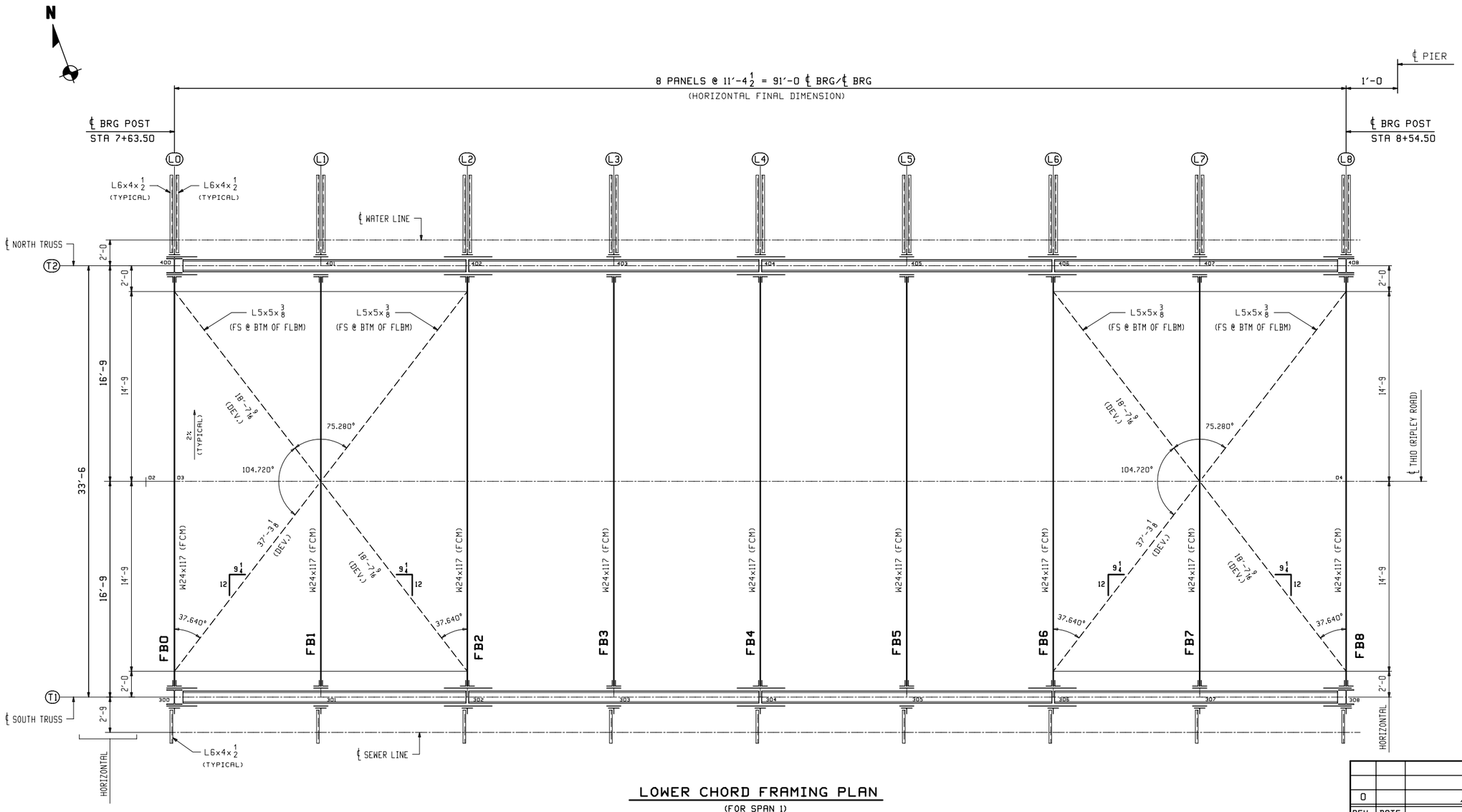

LOWER CHORD FRAMING PLAN

(FOR SPAN 1)

** NOTE **
THE PURPOSE OF THIS DRAWING IS TO COORDINATE GEOMETRIC CONTROL INFORMATION. THIS DWG IS SUBMITTED FOR INFORMATION ONLY AND IS NOT INTENDED FOR SHOP FABRICATION.

WORK THIS DWG. WITH DWG. WS1 & WS3.

REV.	DATE	REMARKS	DWN	CHK	APVL	SHOP
0						

MATERIAL:	SURFACE PREP. & PAINT:	HOLES:	SHOP BOLTS:

DESCRIPTION: LOWER CHORD FRAMING PLAN (SPAN 1)

CASCO BAY STEEL STRUCTURES, INC.
1 WALLACE AVE.
SOUTH PORTLAND, ME 04106
PHONE (207) 780-6722
FAX. (207) 780-6726
TENSOR 3285

STRUCTURE:	TH-10 OVER OTTER CREEK PONY TRUSS BRIDGE	DRAWN: RB	DATE: 9/26/15
		CHKD: WL	DATE: 9/29/15
LOCATION:	RUTLAND CITY, VERMONT	JOB NO.	DWG NO.
PROJ NO.	BRF 3000 (19)	598	WS2
CUSTOMER:	KUBRICKY CONSTRUCTION CORP.		REV. △

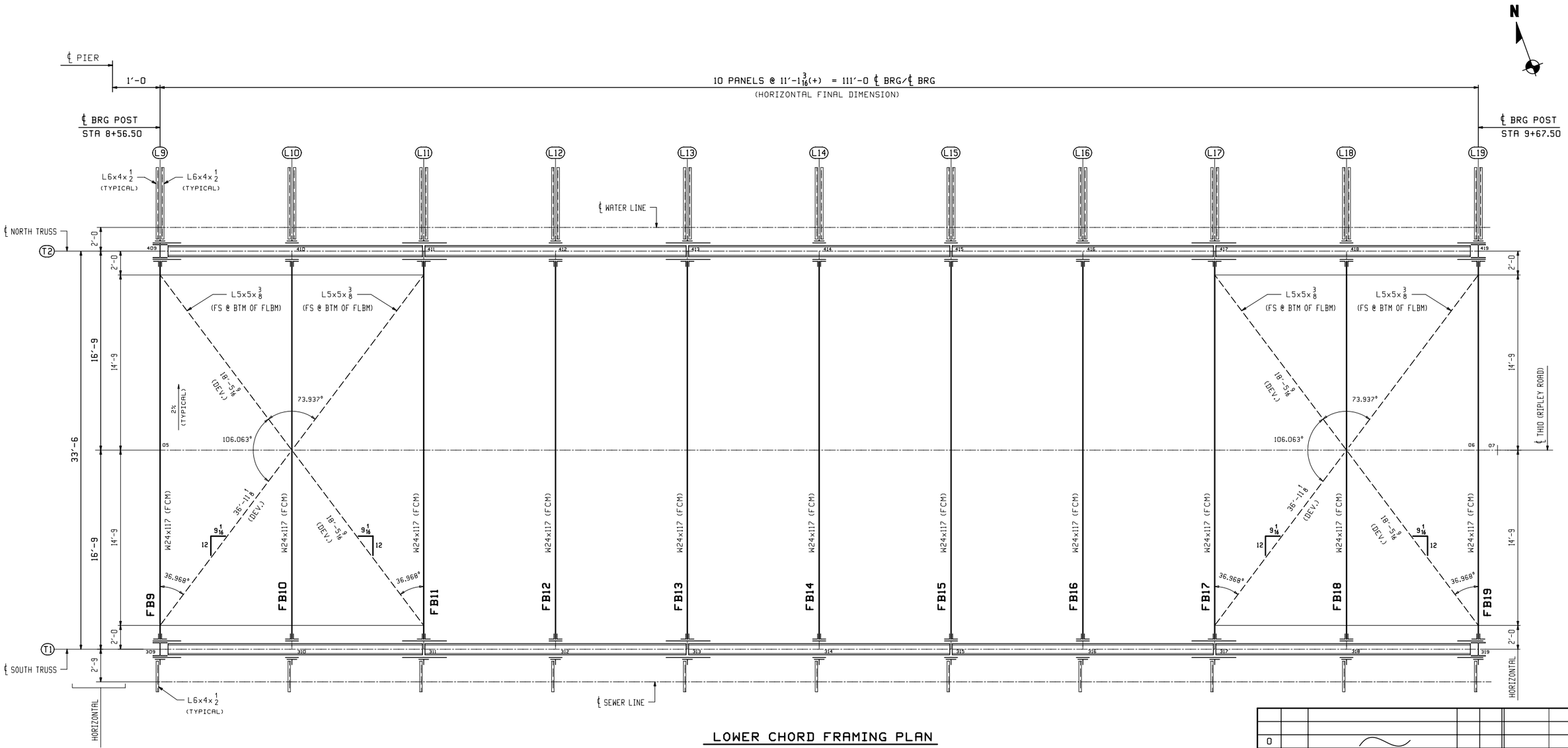

LOWER CHORD FRAMING PLAN

(FOR SPAN 2)

** NOTE **
THE PURPOSE OF THIS DRAWING IS TO COORDINATE GEOMETRIC CONTROL INFORMATION. THIS DWG IS SUBMITTED FOR INFORMATION ONLY AND IS NOT INTENDED FOR SHOP FABRICATION.

WORK THIS DWG. WITH DWG. WS1 & WS2.

REV.	DATE	REMARKS	DWN	CHK	APVL	SHOP
0						

MATERIAL:	SURFACE PREP. & PAINT:	HOLES:	SHOP BOLTS:

DESCRIPTION: LOWER CHORD FRAMING PLAN (SPAN 2)

CASCO BAY STEEL STRUCTURES, INC.
1 WALLACE AVE.
SOUTH PORTLAND, ME 04106
PHONE (207) 780-6722
FAX. (207) 780-6726
TENSOR 3285

STRUCTURE:	TH-10 OVER OTTER CREEK PONY TRUSS BRIDGE	DRAWN: RB	DATE: 9/28/15
		CHKD: WL	DATE: 9/30/15
LOCATION:	RUTLAND CITY, VERMONT	JOB NO.	DWG NO.
PROJ NO.	BRF 3000 (19)	598	WS3
CUSTOMER:	KUBRICKY CONSTRUCTION CORP.		REV. △

RB Mon, Oct 5, 2015 01:51:34 PM /users/jobs/3285/WS3 : Rev0

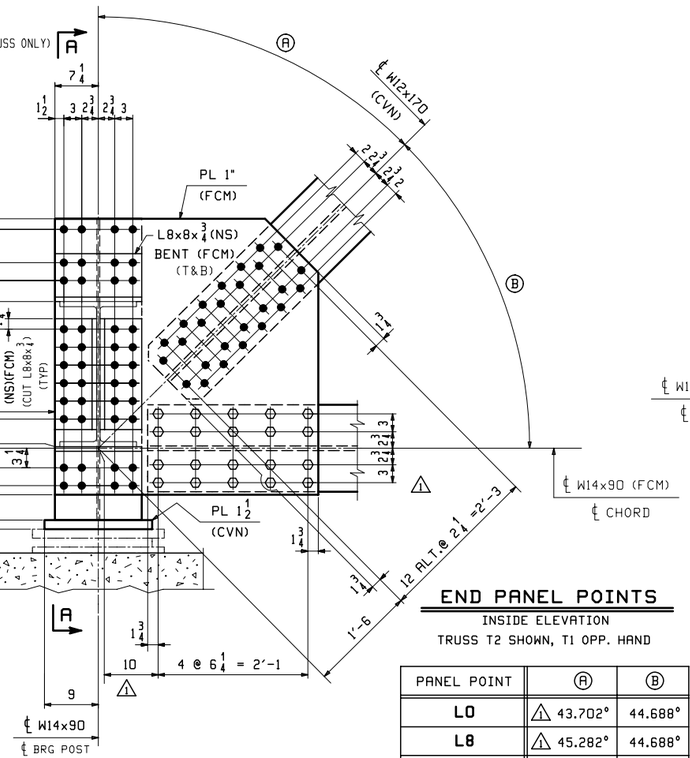

END PANEL POINTS

INSIDE ELEVATION

TRUSS T2 SHOWN, T1 OPP. HAND

PANEL POINT	Ⓐ	Ⓑ
L0	⚠1 43.702°	44.688°
L8	⚠1 45.282°	44.688°
L9	⚠1 44.800°	45.362°
L19	⚠1 42.152°	45.362°

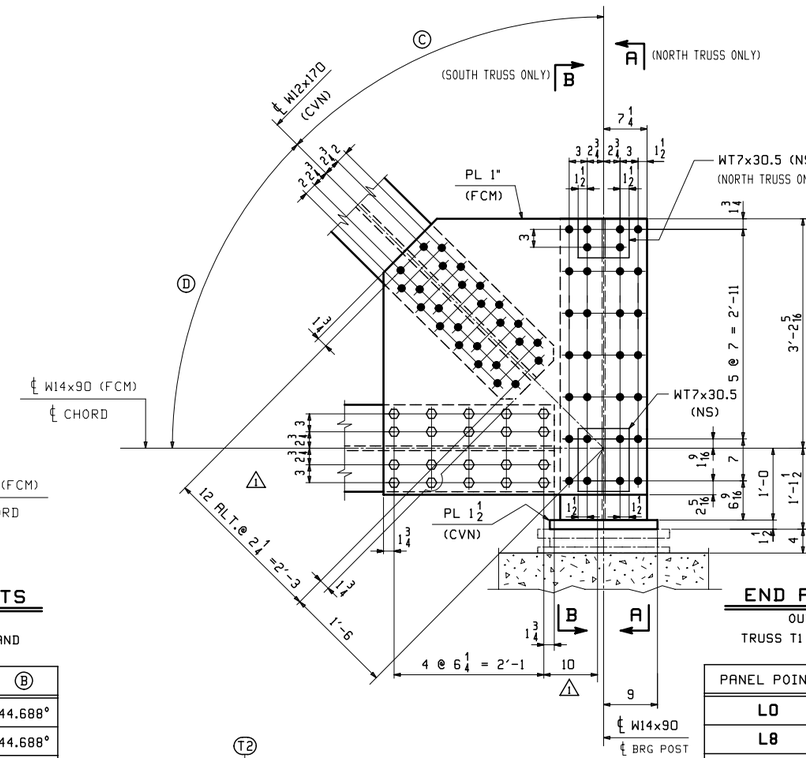

END PANEL POINTS

OUTER ELEVATION

TRUSS T1 SHOWN, T2 OPP. HAND

PANEL POINT	Ⓒ	Ⓓ
L0	⚠1 43.702°	44.688°
L8	⚠1 45.282°	44.688°
L9	⚠1 44.800°	45.362°
L19	⚠1 42.152°	45.362°

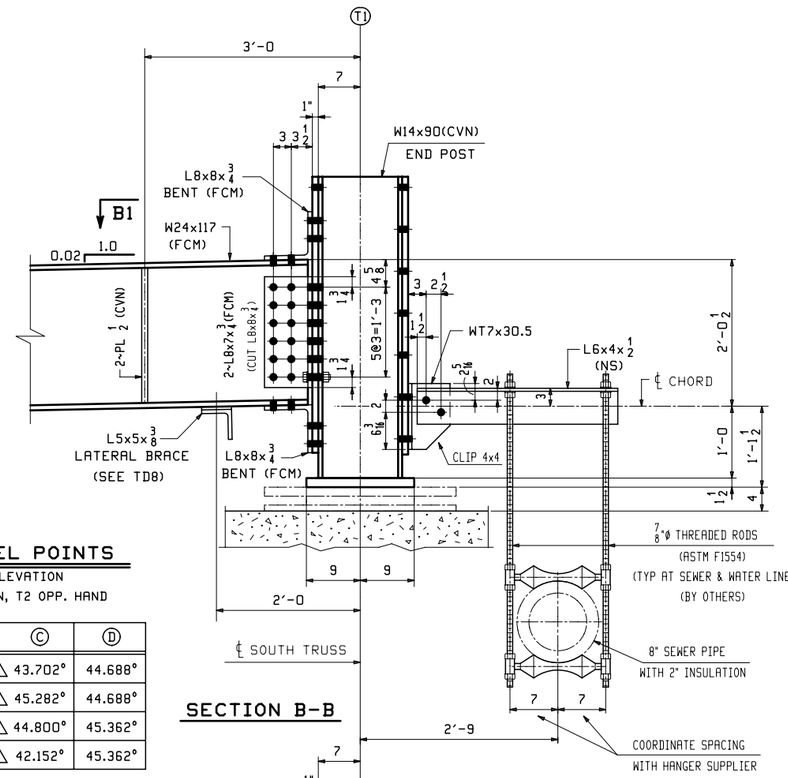

SECTION B-B

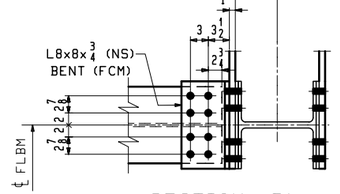

SECTION -B1

(DEVELOPED)

(FLBM TOP FLG SHOWN)

(SECTION @ FLBM BTM FLG SIMILAR)

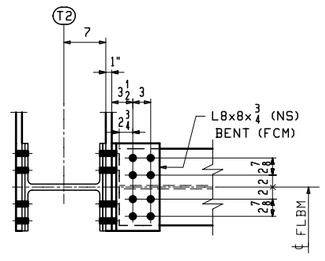

SECTION -A1

(DEVELOPED)

(FLBM TOP FLG SHOWN)

(SECTION @ FLBM BTM FLG SIMILAR)

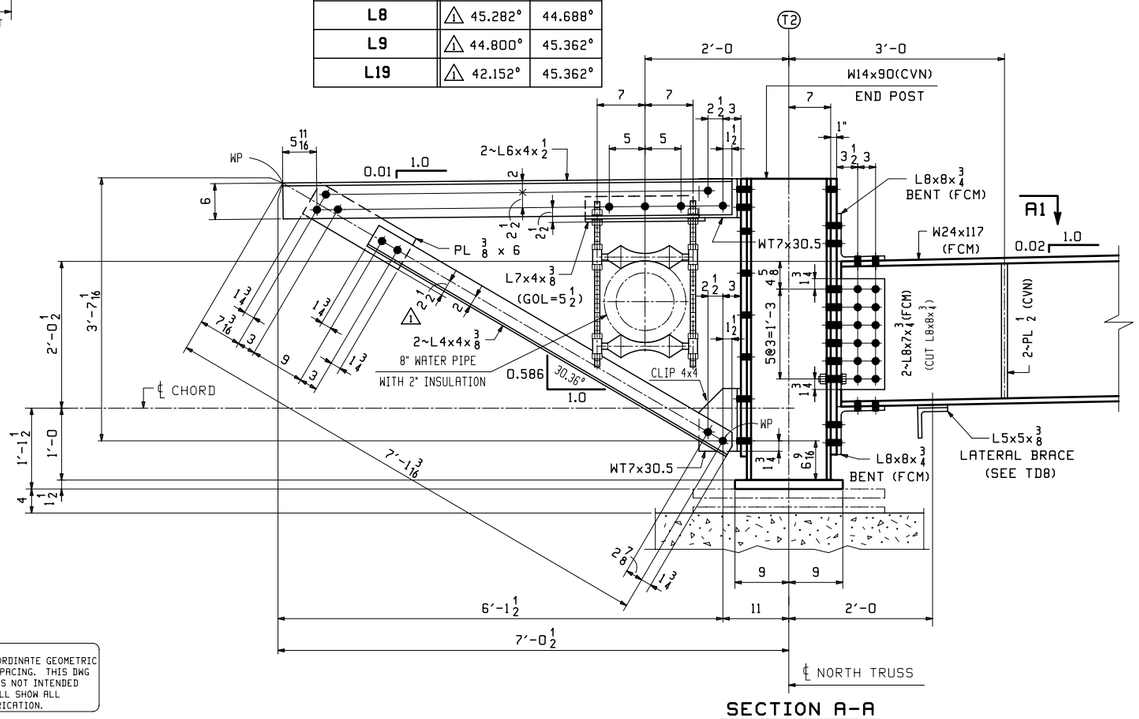

SECTION A-A

NOTES:

1. FCM INDICATES FRACTURE CRITICAL MATERIAL, CVN INDICATES CHARPY V-NOTCH TESTED MATERIAL. ALL STEEL (EXCEPT FOR BOLTS) SHALL BE HOT-DIP GALVANIZED AFTER FABRICATION.
2. BOLTS SHALL BE ⅞Ø A325-1 GALV. (UN). ALL BOLTS SHALL BE INSTALLED WITH HEADS EXPOSED TO PUBLIC VIEW WITH ONE HARDENED WASHER AND ONE DTI WASHER. BOLTS AND WASHERS SHALL BE MECHANICALLY GALVANIZED.
3. DUE TO ROLLING MILL TOLERANCE, THE ACTUAL THICKNESS OF FILL PLATES MAY VARY FROM WHAT IS SHOWN ON THIS DWG. THE SHOP WILL BE RESPONSIBLE FOR ADJUSTING FILL THICKNESS AS REQUIRED TO SUIT THE ACTUAL MATERIAL SIZE. FILL PLATES SHALL BE A SINGLE THICKNESS PLATE.

** NOTE **
THE PURPOSE OF THIS DRAWING IS TO COORDINATE GEOMETRIC CONTROL INFORMATION AND CONNECTION SPACING. THIS DWG IS SUBMITTED FOR INFORMATION ONLY & IS NOT INTENDED FOR SHOP FABRICATION. DETAIL DWGS WILL SHOW ALL WELDING AND DIMENSIONS REQ'D FOR FABRICATION.

REV.	DATE	REMARKS	DWN	CHK	APVL	SHOP
⚠1	1/6/16	REVISED DIMENSIONS & ANGLES	RB	WJL		
0						

MATERIAL:	SURFACE PREP. & PAINT:	HOLES:	SHOP BOLTS:
M270-50 (UN)	HOT-DIP GALV.	15/16Ø (UN)	⅞Ø (UN)

DESCRIPTION: TRUSS LAYOUT @ L0, L8, L9 & L19

CASCO BAY STEEL STRUCTURES, INC.
1 WALLACE AVE. SOUTH PORTLAND, ME 04106
PHONE (207) 780-6722 FAX. (207) 780-6726
TENSOR 3285

STRUCTURE: TH-10 OVER OTTER CREEK PONY TRUSS BRIDGE	DRAWN: RB	DATE: 9/28/15	
	CHKD: WJL	DATE: 10/13/15	
LOCATION: RUTLAND CITY, VERMONT	JOB NO.	DWG NO.	
PROJ NO. BRF 3000 (19)	598	TD1	
CUSTOMER: KUBRICKY CONSTRUCTION CORP.		REV. ⚠1	

WJL Fri, Jan 22, 2016 09:03:37 AM J:\work\jobs\3285\TD1.dwg

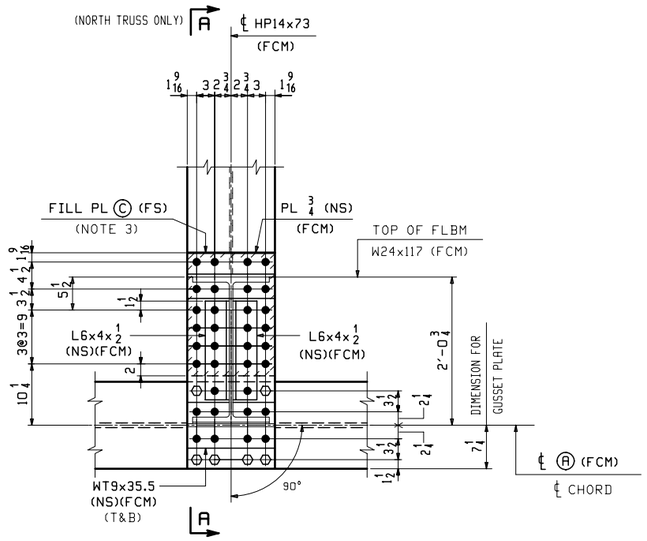

INSIDE ELEVATION

TRUSS T2 SHOWN, T1 OPP. HAND

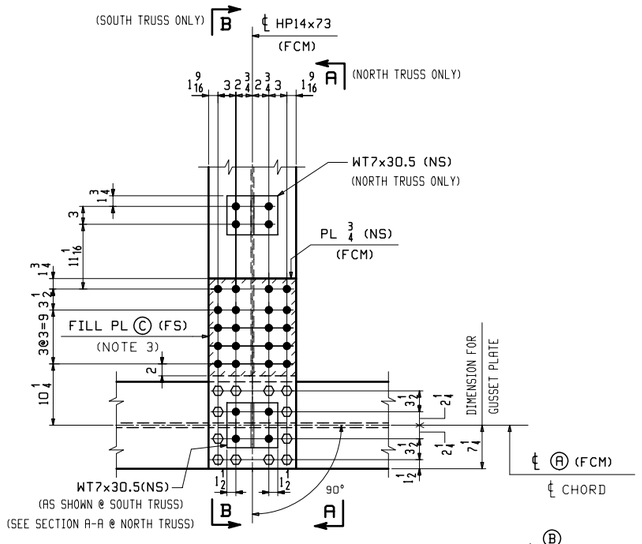

OUTER ELEVATION

TRUSS T1 SHOWN, T2 OPP. HAND & NOTED

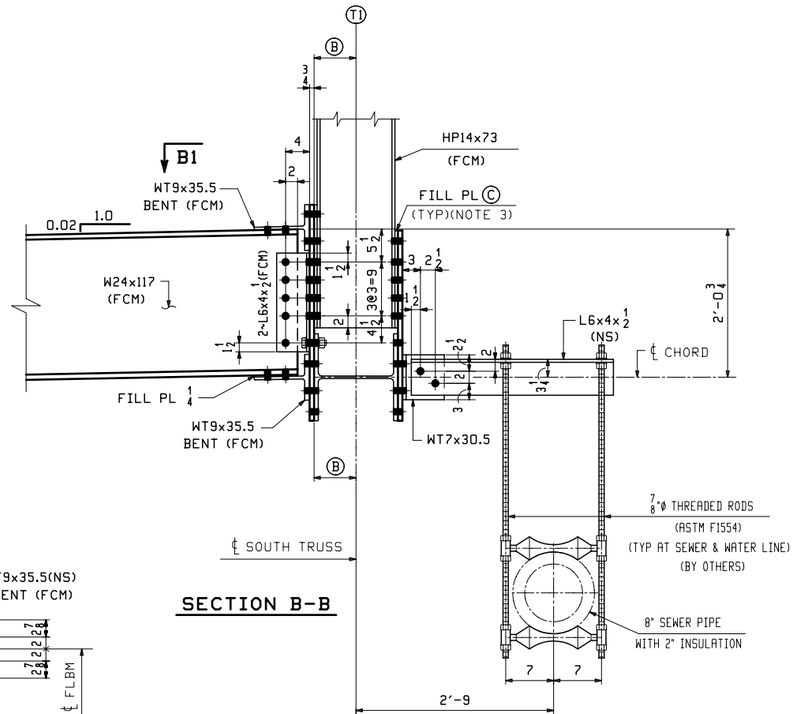

SECTION B-B

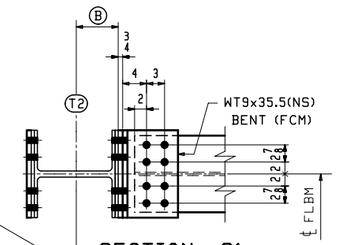

SECTION -A1

(DEVELOPED)
(FLBM TOP FLG SHOWN)
(SECTION @ FLBM BTM FLG SIMILAR)

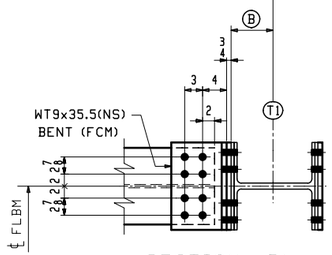

SECTION -B1

(DEVELOPED)
(FLBM TOP FLG SHOWN)
(SECTION @ FLBM BTM FLG SIMILAR)

LOWER CHORD PANEL POINTS @ VERTICALS

PANEL POINT	Ⓐ	Ⓑ	Ⓒ	Ⓓ	Ⓔ	Ⓕ	Ⓖ	Ⓗ
L1,L3,L5,L7,L10,L18	W14x90	7	7 GA (A1011-50)	6'-1 3/4	10 3/4	3'-7 3/16	7'-1 1/2	1 7/8
L12, L16	W14x99	7 1/16	1/4	6'-1 11/16	10 13/16	3'-7 1/8	7'-1 7/16	1 15/16
L14	W14x120	7 1/4	7/16	6'-1 1/2	11	3'-7 1/16	7'-1 3/16	2

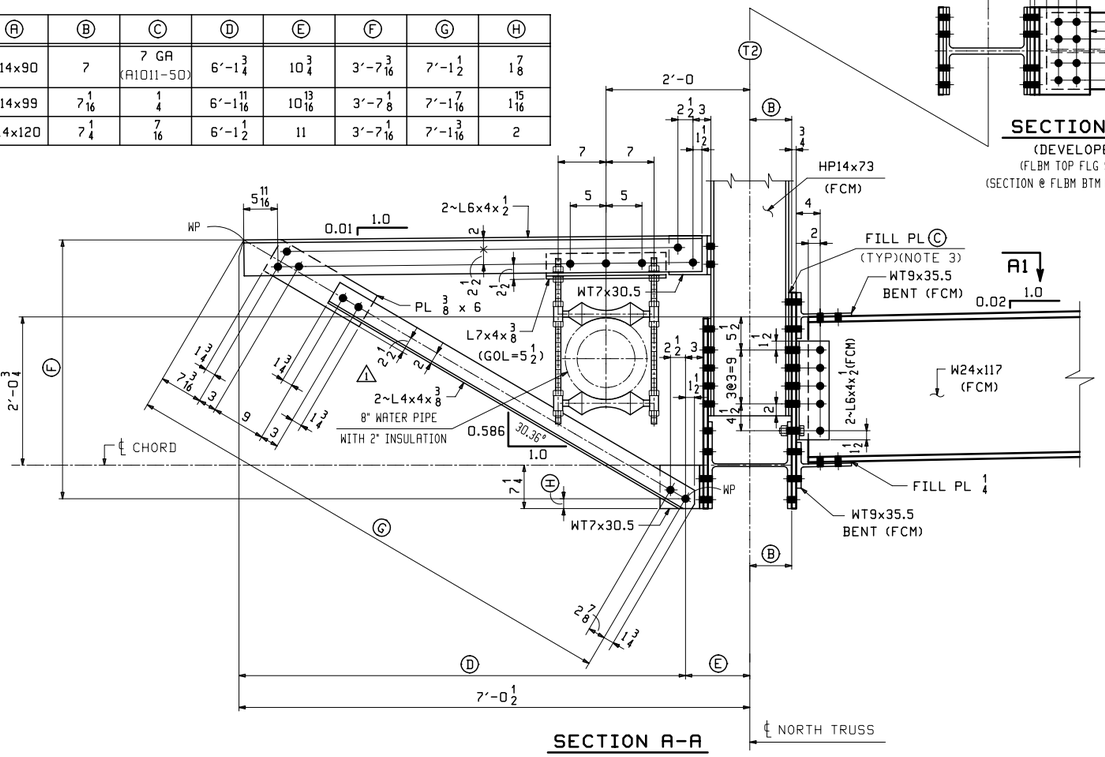

SECTION A-A

NOTES:

1. FCM INDICATES FRACTURE CRITICAL MATERIAL, CVN INDICATES CHARPY V-NOTCH TESTED MATERIAL. ALL STEEL (EXCEPT FOR BOLTS) SHALL BE HOT-DIP GALVANIZED AFTER FABRICATION.
2. BOLTS SHALL BE 7/8ø A325-1 GALV. (UN). ALL BOLTS SHALL BE INSTALLED WITH HEADS EXPOSED TO PUBLIC VIEW WITH ONE HARDENED WASHER AND ONE DTI WASHER. BOLTS AND WASHERS SHALL BE MECHANICALLY GALVANIZED.
3. DUE TO ROLLING MILL TOLERANCE, THE ACTUAL THICKNESS OF FILL PLATES MAY VARY FROM WHAT IS SHOWN ON THIS DWG. THE SHOP WILL BE RESPONSIBLE FOR ADJUSTING FILL THICKNESS AS REQUIRED TO SUIT THE ACTUAL MATERIAL SIZE. FILL PLATES SHALL BE A SINGLE THICKNESS PLATE.

** NOTE **
THE PURPOSE OF THIS DRAWING IS TO COORDINATE GEOMETRIC CONTROL INFORMATION AND CONNECTION SPACING. THIS DWG IS SUBMITTED FOR INFORMATION ONLY & IS NOT INTENDED FOR SHOP FABRICATION. DETAIL DWGS WILL SHOW ALL WELDING AND DIMENSIONS REQ'D FOR FABRICATION.

REV.	DATE	REMARKS	DWN	CHK	APVL	SHOP
1	1/6/16	REVISED DIMENSION	RB	WJL		
0						

MATERIAL:	SURFACE PREP. & PAINT:	HOLES:	SHOP BOLTS:
M270-50 (UN)	HOT-DIP GALV.	15/16ø (UN)	7/8ø (UN)

DESCRIPTION: TRUSS LAYOUT @ L1,L3,L5,L7,L10,L12,L14,L16,L18

CASCO BAY STEEL STRUCTURES, INC.
1 WALLACE AVE. PHONE (207) 780-6722
SOUTH PORTLAND, ME 04106 FAX. (207) 780-6726
TENSOR 3285

STRUCTURE: TH-10 OVER OTTER CREEK PONY TRUSS BRIDGE	DRAWN: RB	DATE: 9/29/15	
	CHK'D: WJL	DATE: 10/14/15	
LOCATION: RUTLAND CITY, VERMONT	JOB NO. 598	DWG NO. TD2	
PROJ NO. BRF 3000 (19)			
CUSTOMER: KUBRICKY CONSTRUCTION CORP.		REV. 1	

WJL Fri, Jan 22, 2016 09:23:46 AM J:\work\jobs\3285\TD2.r.dwg

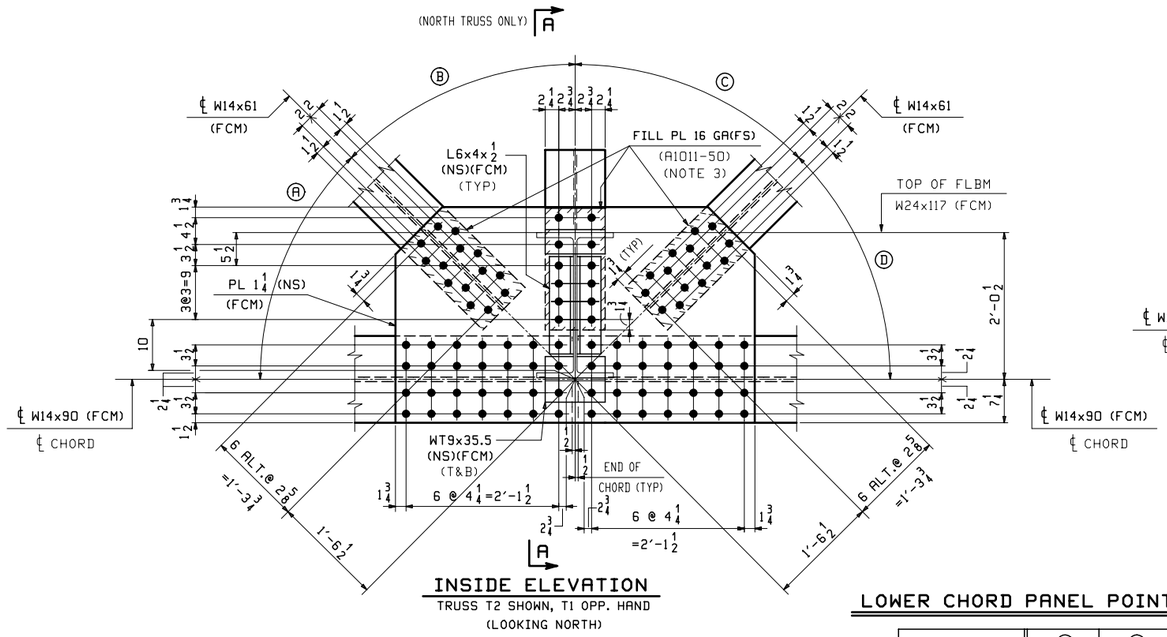

INSIDE ELEVATION

TRUSS T2 SHOWN, T1 OPP. HAND
(LOOKING NORTH)

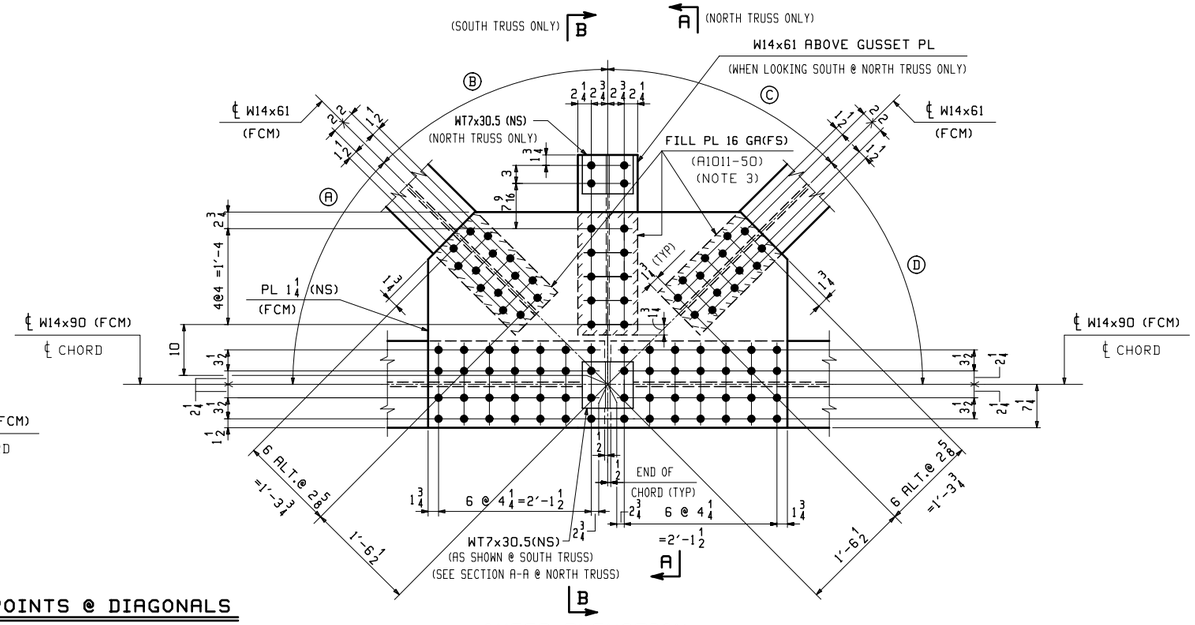

OUTER ELEVATION

TRUSS T1 SHOWN, T2 OPP. HAND & NOTED
(LOOKING NORTH - UN)

LOWER CHORD PANEL POINTS @ DIAGONALS

PANEL POINT	Ⓐ	Ⓑ	Ⓒ	Ⓓ
L2	44.688°	45.573°	45.553°	44.708°
L4	44.724°	45.575°	45.575°	44.724°
L6	44.708°	45.553°	45.573°	44.688°

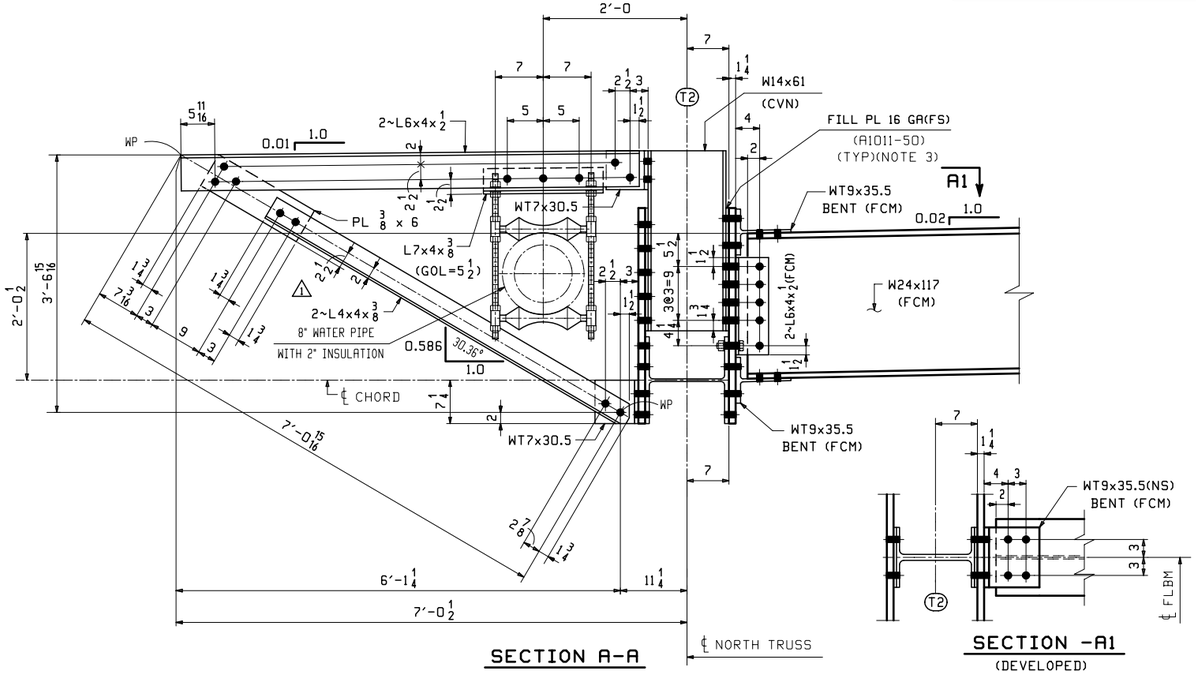

SECTION A-A

SECTION -A1

(DEVELOPED)
(FLBM TOP FLG SHOWN)
(FLBM BTM FLG SIMILAR)

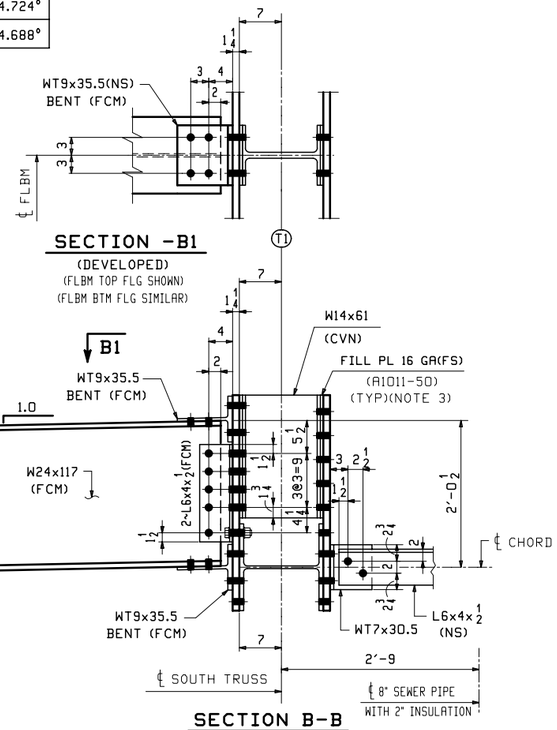

SECTION -B1

(DEVELOPED)
(FLBM TOP FLG SHOWN)
(FLBM BTM FLG SIMILAR)

SECTION B-B

** NOTE **
THE PURPOSE OF THIS DRAWING IS TO COORDINATE GEOMETRIC CONTROL INFORMATION AND CONNECTION SPACING. THIS DWG IS SUBMITTED FOR INFORMATION ONLY & IS NOT INTENDED FOR SHOP FABRICATION. DETAIL DWGS WILL SHOW ALL WELDING AND DIMENSIONS REQ'D FOR FABRICATION.

NOTES:

1. FCM INDICATES FRACTURE CRITICAL MATERIAL, CVN INDICATES CHARPY V-NOTCH TESTED MATERIAL. ALL STEEL (EXCEPT FOR BOLTS) SHALL BE HOT-DIP GALVANIZED AFTER FABRICATION.
2. BOLTS SHALL BE 7/8ø A325-1 GALV. (UN). ALL BOLTS SHALL BE INSTALLED WITH HEADS EXPOSED TO PUBLIC VIEW WITH ONE HARDENED WASHER AND ONE DTI WASHER. BOLTS AND WASHERS SHALL BE MECHANICALLY GALVANIZED.
3. DUE TO ROLLING MILL TOLERANCE, THE ACTUAL THICKNESS OF FILL PLATES MAY VARY FROM WHAT IS SHOWN ON THIS DWG. THE SHOP WILL BE RESPONSIBLE FOR ADJUSTING FILL THICKNESS AS REQUIRED TO SUIT THE ACTUAL MATERIAL SIZE. FILL PLATES SHALL BE A SINGLE THICKNESS PLATE.

REV.	DATE	REMARKS	DWN	CHK	APVL	SHOP
1	1/6/16	REVISED DIMENSION	RB	WJL		
0		~				

MATERIAL:	SURFACE PREP. & PAINT:	HOLES:	SHOP BOLTS:
M270-50 (UN)	HOT-DIP GALV.	15/16ø (UN)	7/8ø (UN)

DESCRIPTION: TRUSS LAYOUT @ L2, L4 & L6

CASCO BAY STEEL STRUCTURES
CASCO BAY STEEL STRUCTURES, INC.
1 WALLACE AVE. SOUTH PORTLAND, ME 04106
PHONE (207) 780-6722 FAX. (207) 780-6726
TENSOR 3285

STRUCTURE:	TH-10 OVER OTTER CREEK PONY TRUSS BRIDGE	DRAWN: RB	DATE: 9/30/15
		CHK'D: WJL	DATE: 10/14/15
LOCATION:	RUTLAND CITY, VERMONT	JOB NO.	DWG NO.
PROJ NO.	BRF 3000 (19)	598	TD3
CUSTOMER:	KUBRICKY CONSTRUCTION CORP.		REV. 1

WJL Fri, Jan 22, 2016 08:40:02 AM J:\work\jobs\3285\TD3.dwg

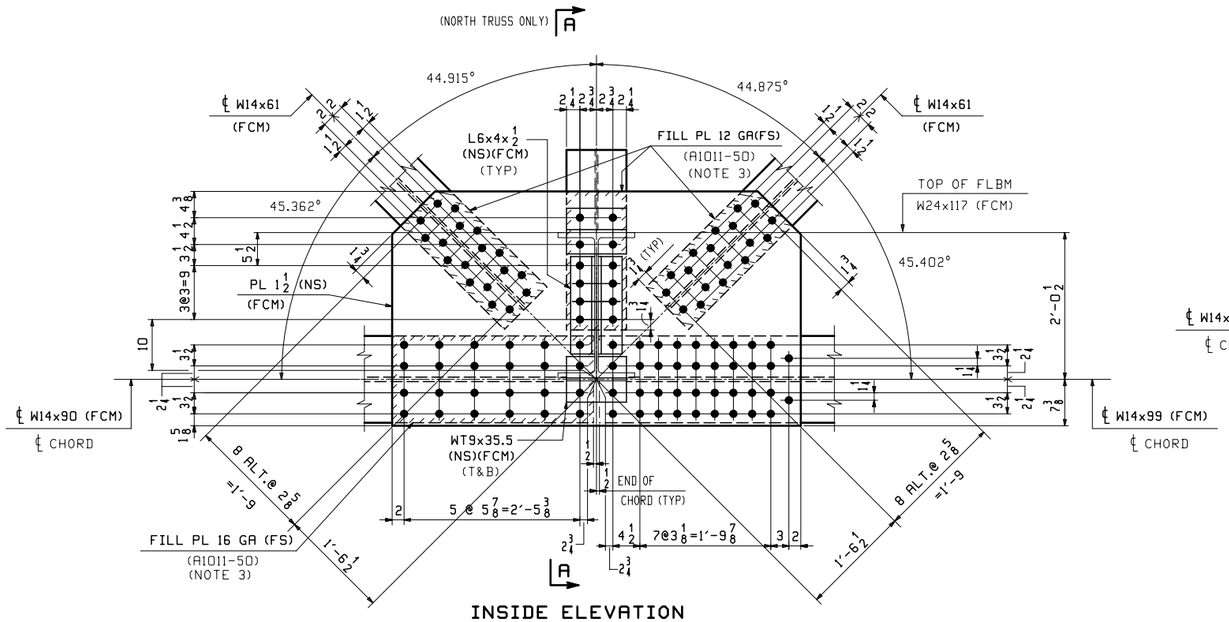

INSIDE ELEVATION

TRUSS T2 SHOWN, T1 OPP. HAND
(LOOKING NORTH)

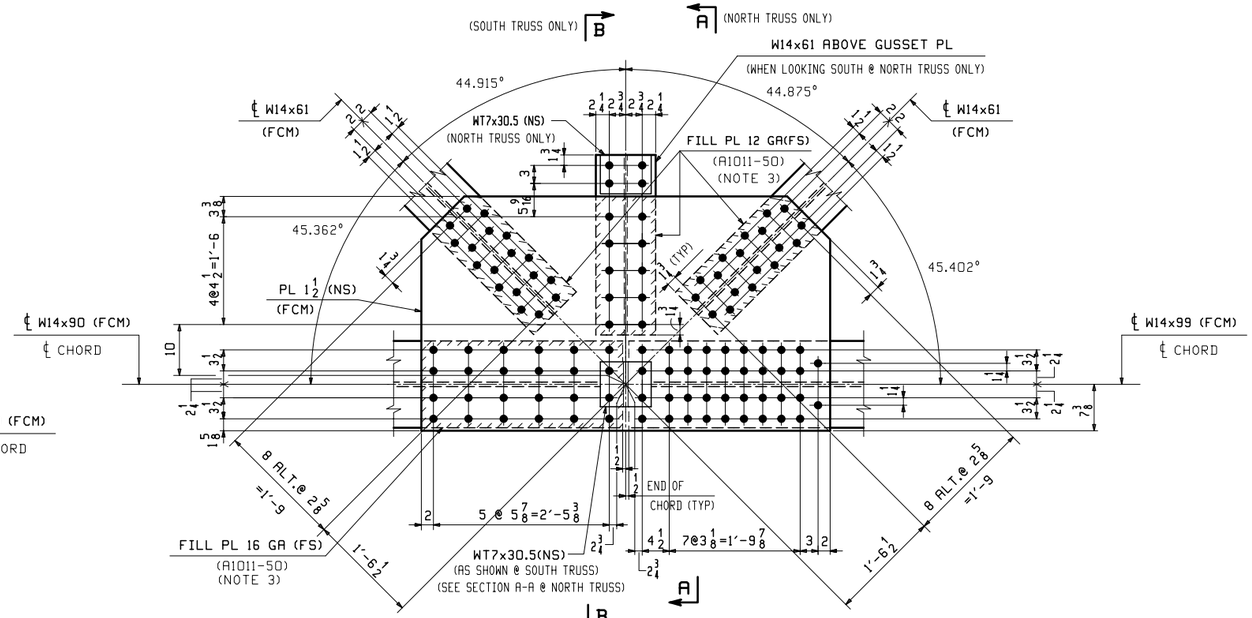

OUTER ELEVATION

TRUSS T1 SHOWN, T2 OPP. HAND & NOTED
(LOOKING NORTH - UN)

LOWER CHORD PANEL POINTS L11 & L17

(DETAILS FOR L11 ARE SHOWN)
(DETAILS FOR L17 ARE OPP. HAND)

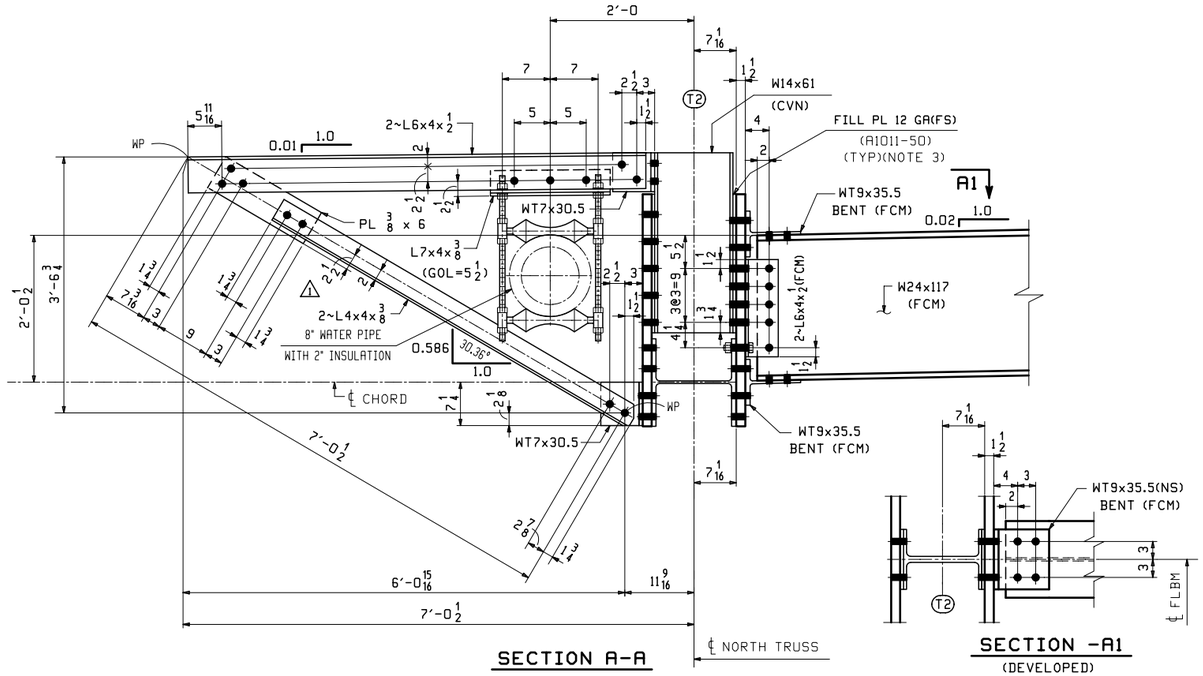

SECTION A-A

SECTION -A1

(DEVELOPED)
(FLBM TOP FLG SHOWN)
(FLBM BTM FLG SIMILAR)

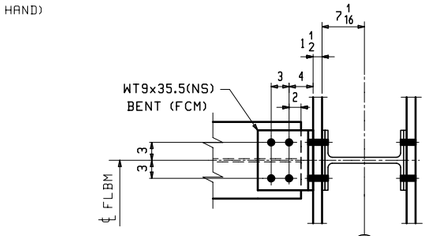

SECTION -B1

(DEVELOPED)
(FLBM TOP FLG SHOWN)
(FLBM BTM FLG SIMILAR)

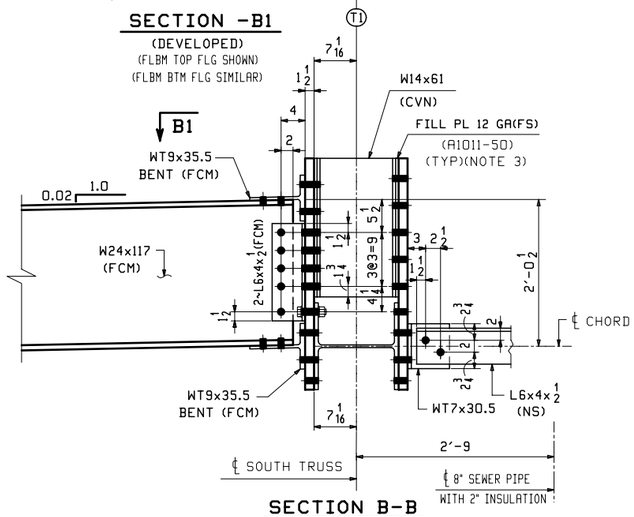

SECTION B-B

** NOTE **
THE PURPOSE OF THIS DRAWING IS TO COORDINATE GEOMETRIC CONTROL INFORMATION AND CONNECTION SPACING. THIS DWG IS SUBMITTED FOR INFORMATION ONLY & IS NOT INTENDED FOR SHOP FABRICATION. DETAIL DWGS WILL SHOW ALL WELDING AND DIMENSIONS REQ'D FOR FABRICATION.

NOTES:

1. FCM INDICATES FRACTURE CRITICAL MATERIAL, CVN INDICATES CHARPY V-NOTCH TESTED MATERIAL. ALL STEEL (EXCEPT FOR BOLTS) SHALL BE HOT-DIP GALVANIZED AFTER FABRICATION.
2. BOLTS SHALL BE 7/8ø A325-1 GALV. (UN). ALL BOLTS SHALL BE INSTALLED WITH HEADS EXPOSED TO PUBLIC VIEW WITH ONE HARDENED WASHER AND ONE DTI WASHER. BOLTS AND WASHERS SHALL BE MECHANICALLY GALVANIZED.
3. DUE TO ROLLING MILL TOLERANCE, THE ACTUAL THICKNESS OF FILL PLATES MAY VARY FROM WHAT IS SHOWN ON THIS DWG. THE SHOP WILL BE RESPONSIBLE FOR ADJUSTING FILL THICKNESS AS REQUIRED TO SUIT THE ACTUAL MATERIAL SIZE. FILL PLATES SHALL BE A SINGLE THICKNESS PLATE.

REV.	DATE	REMARKS	DWN	CHK	APVL	SHOP
1	1/6/16	REVISED DIMENSION	RB	WJL		
0						

MATERIAL:	SURFACE PREP. & PAINT:	HOLES:	SHOP BOLTS:
M270-50 (UN)	HOT-DIP GALV.	15/16ø (UN)	7/8ø (UN)

DESCRIPTION: TRUSS LAYOUT @ L11 & L17

CASCO BAY STEEL STRUCTURES, INC.
1 WALLACE AVE. SOUTH PORTLAND, ME 04106
PHONE (207) 780-6722 FAX. (207) 780-6726
TENSOR 3285

STRUCTURE: TH-10 OVER OTTER CREEK PONY TRUSS BRIDGE	DRAWN: RB	DATE: 10/1/15	
	CHKD: WJL	DATE: 10/15/15	
LOCATION: RUTLAND CITY, VERMONT	JOB NO. 598	DWG NO. TD4	
PROJ NO. BRF 3000 (19)			
CUSTOMER: KUBRICKY CONSTRUCTION CORP.		REV. 1	

M:\... Fri, Jan 22, 2016 09:24:19 AM ...\work\jobs\3285\TD4.1.dwg

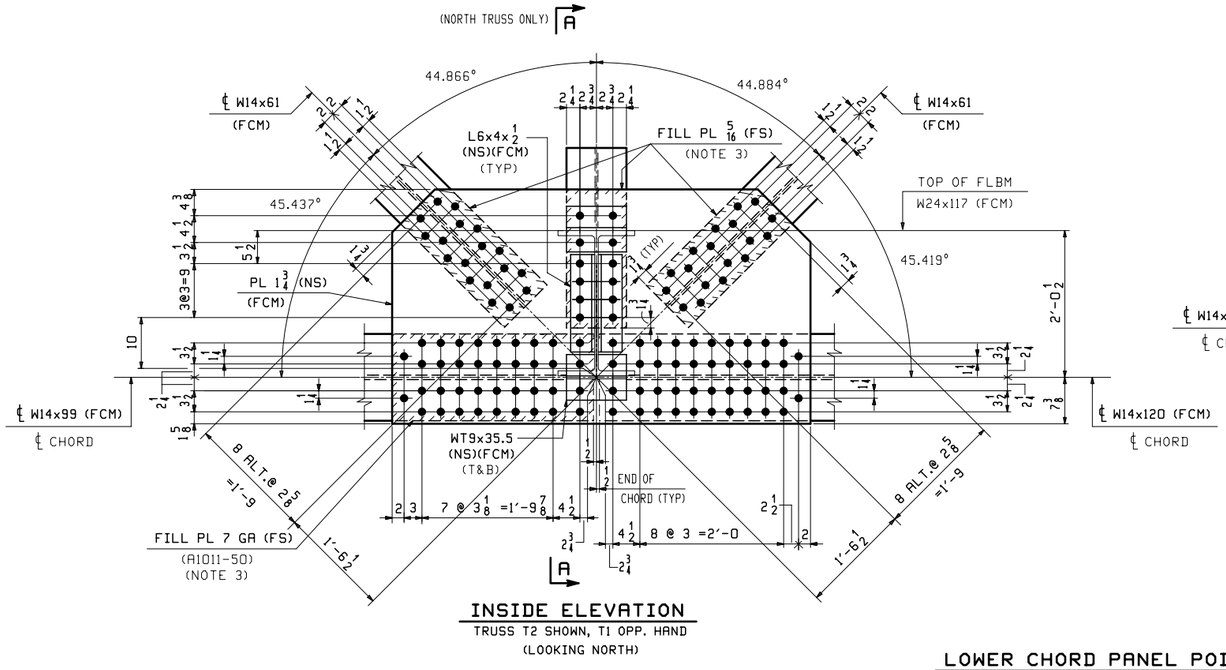

INSIDE ELEVATION

TRUSS T2 SHOWN, T1 OPP. HAND

(LOOKING NORTH)

LOWER CHORD PANEL POINTS L13 & L15

(DETAILS FOR L13 ARE SHOWN)

(DETAILS FOR L15 ARE OPP. HAND)

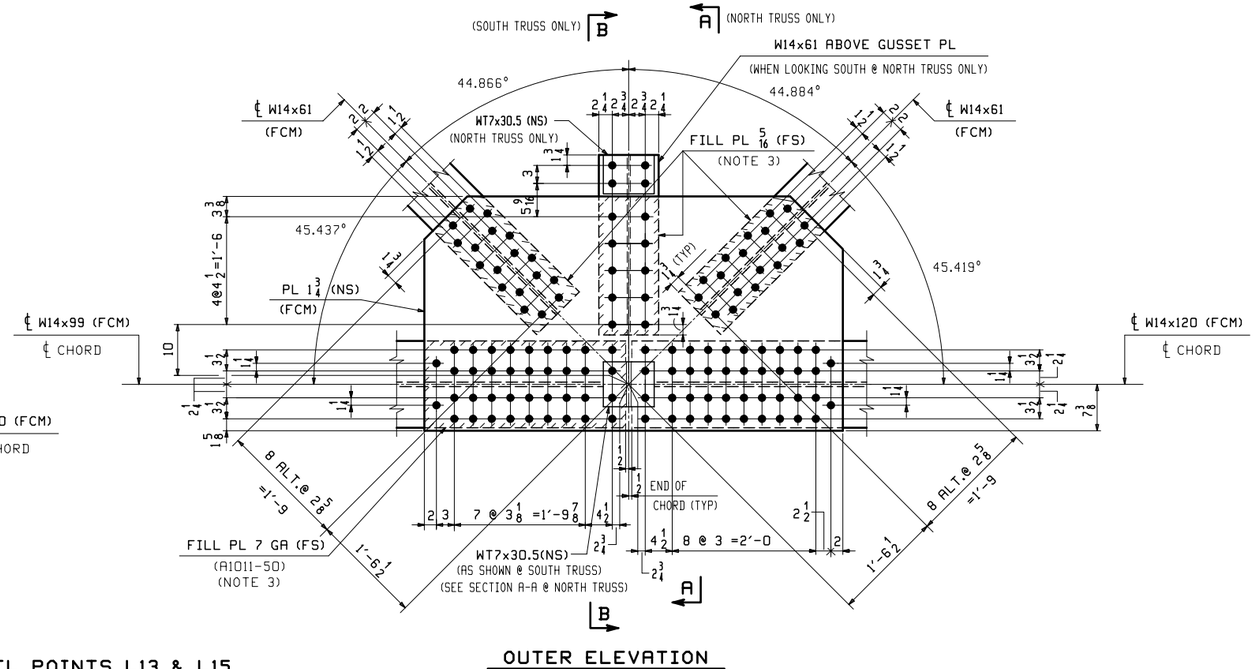

OUTER ELEVATION

TRUSS T1 SHOWN, T2 OPP. HAND & NOTED

(LOOKING NORTH - UN)

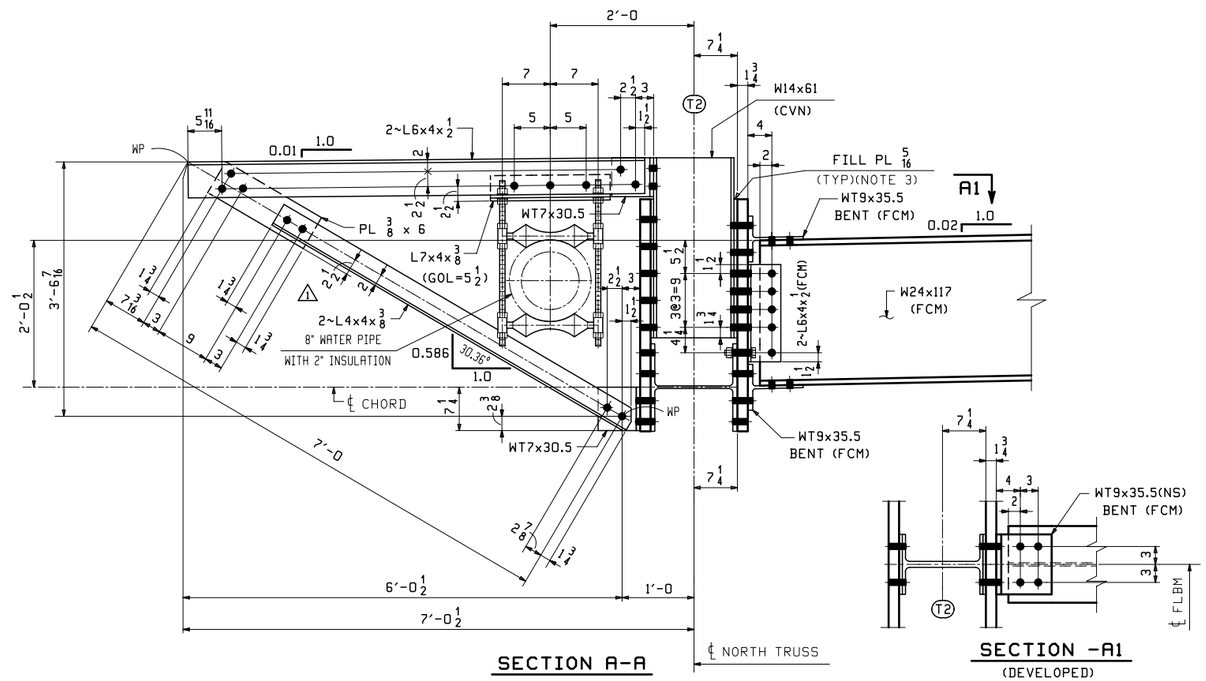

SECTION A-A

SECTION -A1

(DEVELOPED)

(FLBM TOP FLG SHOWN)

(FLBM BTM FLG SIMILAR)

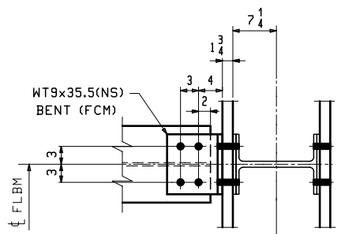

SECTION -B1

(DEVELOPED)

(FLBM TOP FLG SHOWN)

(FLBM BTM FLG SIMILAR)

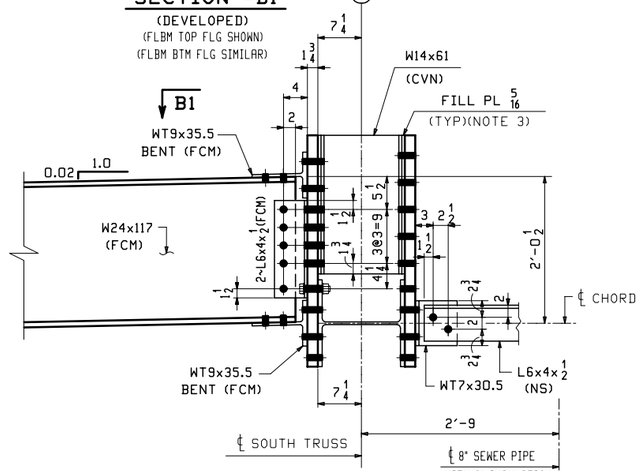

SECTION B-B

** NOTE **
THE PURPOSE OF THIS DRAWING IS TO COORDINATE GEOMETRIC CONTROL INFORMATION AND CONNECTION SPACING. THIS DWG IS SUBMITTED FOR INFORMATION ONLY & IS NOT INTENDED FOR SHOP FABRICATION. DETAIL DWGS WILL SHOW ALL WELDING AND DIMENSIONS REQ'D FOR FABRICATION.

NOTES:

1. FCM INDICATES FRACTURE CRITICAL MATERIAL, CVN INDICATES CHARPY V-NOTCH TESTED MATERIAL. ALL STEEL (EXCEPT FOR BOLTS) SHALL BE HOT-DIP GALVANIZED AFTER FABRICATION.
2. BOLTS SHALL BE 7/8ø A325-1 GALV. (UN). ALL BOLTS SHALL BE INSTALLED WITH HEADS EXPOSED TO PUBLIC VIEW WITH ONE HARDENED WASHER AND ONE DTI WASHER. BOLTS AND WASHERS SHALL BE MECHANICALLY GALVANIZED.
3. DUE TO ROLLING MILL TOLERANCE, THE ACTUAL THICKNESS OF FILL PLATES MAY VARY FROM WHAT IS SHOWN ON THIS DWG. THE SHOP WILL BE RESPONSIBLE FOR ADJUSTING FILL THICKNESS AS REQUIRED TO SUIT THE ACTUAL MATERIAL SIZE. FILL PLATES SHALL BE A SINGLE THICKNESS PLATE.

REV.	DATE	REMARKS	DWN	CHK	APVL	SHOP
1	1/6/16	REVISED DIMENSION	RB	WJL		
0						

MATERIAL:	SURFACE PREP. & PAINT:	HOLES:	SHOP BOLTS:
M270-50 (UN)	HOT-DIP GALV.	15/16ø (UN)	7/8ø (UN)

DESCRIPTION: TRUSS LAYOUT @ L13 & L15

CASCO BAY STEEL STRUCTURES, INC.
1 WALLACE AVE. SOUTH PORTLAND, ME 04106
PHONE (207) 780-6722 FAX. (207) 780-6726
TENSOR 3285

STRUCTURE: TH-10 OVER OTTER CREEK PONY TRUSS BRIDGE	DRAWN: RB	DATE: 10/2/15	
	CHK'D: WJL	DATE: 10/15/15	
LOCATION: RUTLAND CITY, VERMONT	JOB NO. 598	DWG NO. TD5	
PROJ NO. BRF 3000 (19)			
CUSTOMER: KUBRICKY CONSTRUCTION CORP.		REV. 1	

WJL Fri, Jan 22, 2016 10:46:09 AM J:\work\jobs\598\TD5.dwg

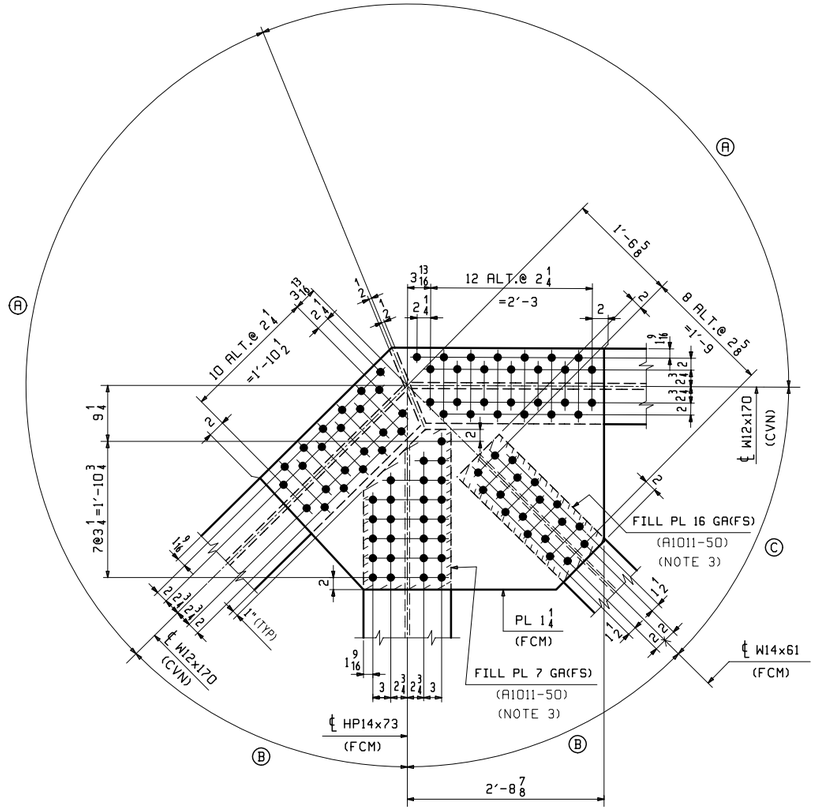

UPPER CORNER PANEL POINTS

ELEVATION AS SHOWN FOR U1 & U10, OPP. HAND FOR U7 & U18
INSIDE & OUTER ELEVATION FOR TRUSS T1 & T2 ARE IDENTICAL
(LOOKING NORTH @ U1 & U10, LOOKING SOUTH @ U7 & U18)

PANEL POINT	Ⓐ	Ⓑ	Ⓒ
U1	112.466°	45.312°	44.444°
U7	112.466°	45.312°	44.444°
U10	112.808°	44.638°	45.108°
U18	112.808°	44.638°	45.108°

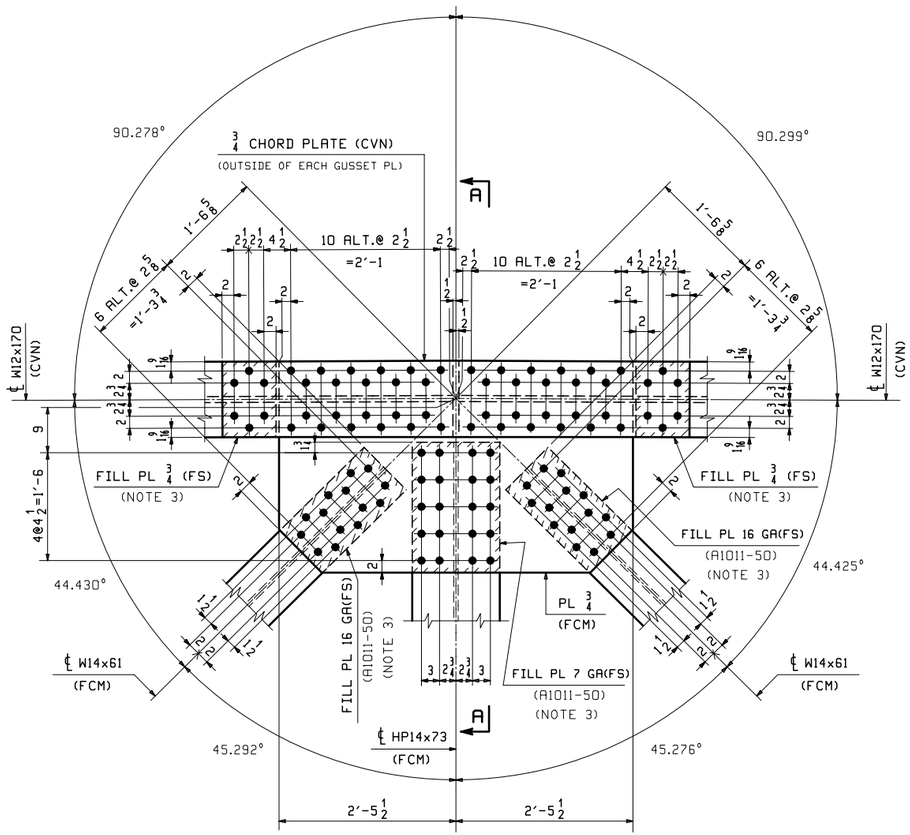

UPPER CHORD PANEL POINTS U3 & U5

(DETAILS FOR U3 ARE SHOWN)
(DETAILS FOR U5 ARE OPP. HAND)
INSIDE & OUTER ELEVATION FOR TRUSS T1 & T2 ARE IDENTICAL
(LOOKING NORTH)

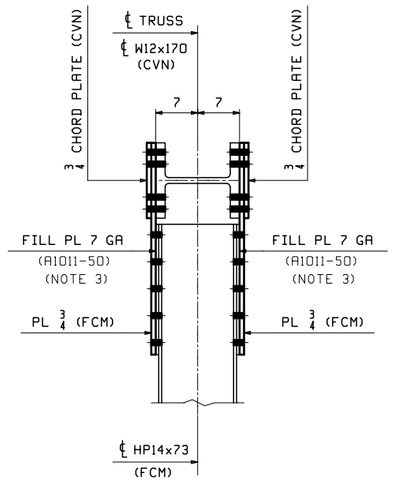

SECTION A-A

NOTES:
1. FCM INDICATES FRACTURE CRITICAL MATERIAL,
   CVN INDICATES CHARPY V-NOTCH TESTED MATERIAL.
   ALL STEEL (EXCEPT FOR BOLTS) SHALL BE HOT-DIP GALVANIZED AFTER FABRICATION.

2. BOLTS SHALL BE 7/8Ø A325-1 GALV. (UN). ALL BOLTS SHALL BE INSTALLED WITH HEADS EXPOSED TO PUBLIC VIEW WITH ONE HARDENNED WASHER AND ONE DTI WASHER. BOLTS AND WASHERS SHALL BE MECHANICALLY GALVANIZED.

3. DUE TO ROLLING MILL TOLERANCE, THE ACTUAL THICKNESS OF FILL PLATES MAY VARY FROM WHAT IS SHOWN ON THIS DWG. THE SHOP WILL BE RESPONSIBLE FOR ADJUSTING FILL THICKNESS AS REQUIRED TO SUIT THE ACTUAL MATERIAL SIZE. FILL PLATES SHALL BE A SINGLE THICKNESS PLATE.

** NOTE **
THE PURPOSE OF THIS DRAWING IS TO COORDINATE GEOMETRIC CONTROL INFORMATION AND CONNECTION SPACING. THIS DWG IS SUBMITTED FOR INFORMATION ONLY & IS NOT INTENDED FOR SHOP FABRICATION. DETAIL DWGS WILL SHOW ALL WELDING AND DIMENSIONS REQ'D FOR FABRICATION.

REV.	DATE	REMARKS	DWN	CHK	APVL	SHOP
0						

MATERIAL:	SURFACE PREP. & PAINT:	HOLES:	SHOP BOLTS:
M270-50 (UN)	HOT-DIP GALV.	15/16Ø (UN)	7/8Ø (UN)

DESCRIPTION: TRUSS LAYOUT @ U1, U3, U5, U7, U10 & U18

CASCO BAY STEEL STRUCTURES, INC.
1 WALLACE AVE. PHONE (207) 780-6722
SOUTH PORTLAND, ME 04106 FAX. (207) 780-6726
TENSOR 3285

STRUCTURE: TH-10 OVER OTTER CREEK PONY TRUSS BRIDGE	DRAWN: RB	DATE: 10/2/15
	CHKD: WJL	DATE: 10/15/15
LOCATION: RUTLAND CITY, VERMONT	JOB NO. 598	DWG NO. TD6
PROJ NO. BRF 3000 (19)		REV. △
CUSTOMER: KUBRICKY CONSTRUCTION CORP.		

RB Fri, Oct 16, 2015 01:01:53 PM J:\work\jobs\3285\TD6.dwg

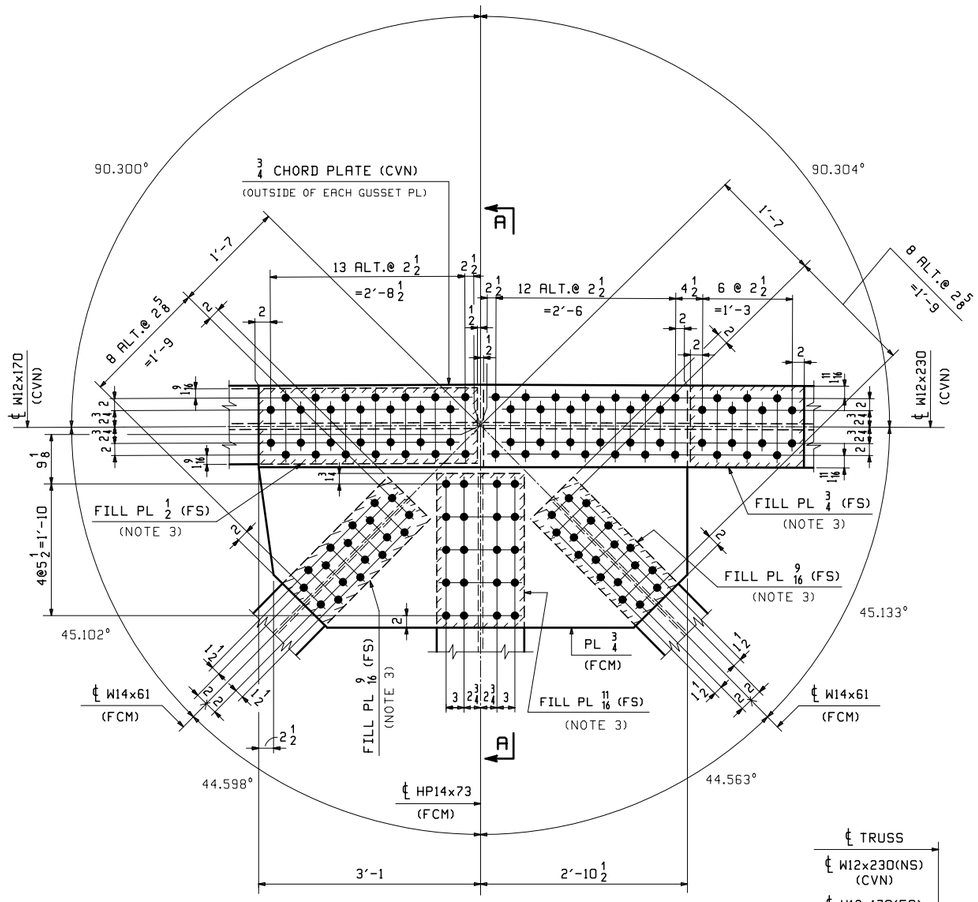

UPPER CHORD PANEL POINTS U12 & U16

(DETAILS FOR U12 ARE SHOWN)
(DETAILS FOR U16 ARE OPP. HAND)
INSIDE & OUTER ELEVATION FOR TRUSS T1 & T2 ARE IDENTICAL
(LOOKING NORTH)

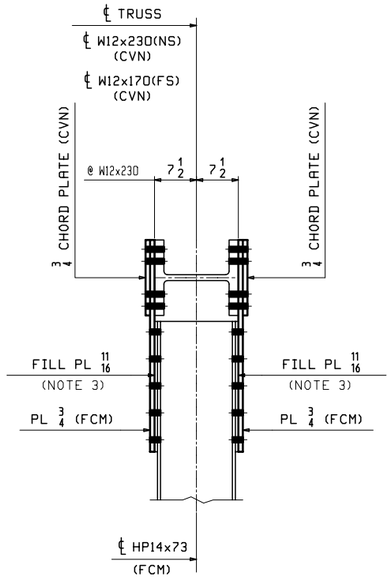

SECTION A-A

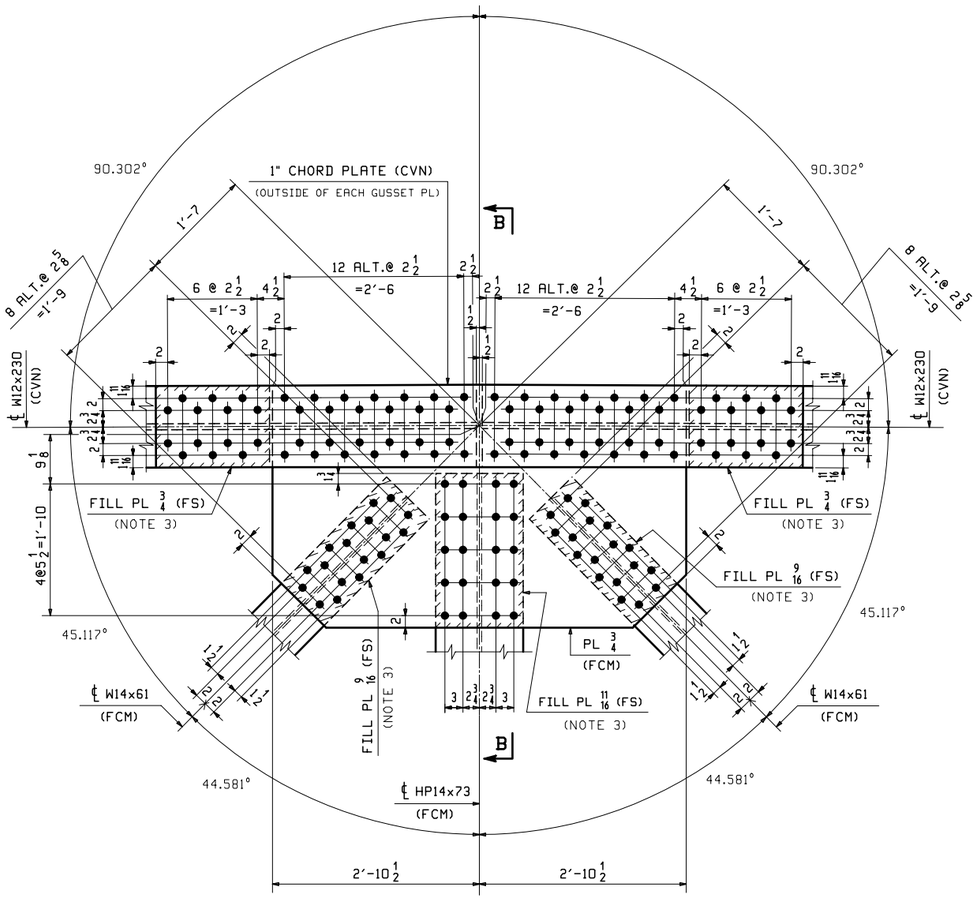

UPPER CHORD PANEL POINT U14

INSIDE & OUTER ELEVATION FOR TRUSS T1 & T2 ARE IDENTICAL
(LOOKING NORTH)

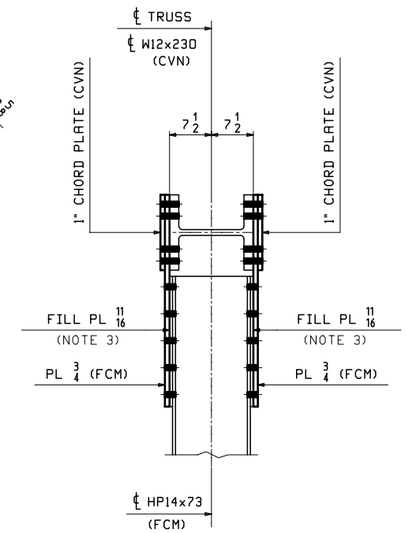

SECTION B-B

NOTES:
1. FCM INDICATES FRACTURE CRITICAL MATERIAL,
   CVN INDICATES CHARPY V-NOTCH TESTED MATERIAL.
   ALL STEEL (EXCEPT FOR BOLTS) SHALL BE HOT-DIP GALVANIZED AFTER FABRICATION.

2. BOLTS SHALL BE ⅞Ø A325-1 GALV. (UN). ALL BOLTS SHALL BE INSTALLED WITH HEADS EXPOSED TO PUBLIC VIEW WITH ONE HARDENNED WASHER AND ONE DTI WASHER. BOLTS AND WASHERS SHALL BE MECHANICALLY GALVANIZED.

3. DUE TO ROLLING MILL TOLERANCE, THE ACTUAL THICKNESS OF FILL PLATES MAY VARY FROM WHAT IS SHOWN ON THIS DWG. THE SHOP WILL BE RESPONSIBLE FOR ADJUSTING FILL THICKNESS AS REQUIRED TO SUIT THE ACTUAL MATERIAL SIZE. FILL PLATES SHALL BE A SINGLE THICKNESS PLATE.

** NOTE **
THE PURPOSE OF THIS DRAWING IS TO COORDINATE GEOMETRIC CONTROL INFORMATION AND CONNECTION SPACING. THIS DWG IS SUBMITTED FOR INFORMATION ONLY & IS NOT INTENDED FOR SHOP FABRICATION. DETAIL DWGS WILL SHOW ALL WELDING AND DIMENSIONS REQ'D FOR FABRICATION.

REV.	DATE	REMARKS	DWN	CHK	APVL	SHOP
0						

MATERIAL:	SURFACE PREP. & PAINT:	HOLES:	SHOP BOLTS:
M270-50 (UN)	HOT-DIP GALV.	15/16Ø (UN)	⅞Ø (UN)

DESCRIPTION: TRUSS LAYOUT @ U12, U14 & U16

CASCO BAY STEEL STRUCTURES, INC.
1 WALLACE AVE. SOUTH PORTLAND, ME 04106
PHONE (207) 780-6722 FAX. (207) 780-6726
TENSOR 3285

STRUCTURE: TH-10 OVER OTTER CREEK PONY TRUSS BRIDGE	DRAWN: RB	DATE: 10/5/15	
	CHKD: WJL	DATE: 10/15/15	
LOCATION: RUTLAND CITY, VERMONT	JOB NO.	DWG NO.	
PROJ NO. BRF 3000 (19)	598	TD7	
CUSTOMER: KUBRICKY CONSTRUCTION CORP.		REV. △	

Fri, Oct 16, 2015 01:11:31 PM J:\work\jobs\3285\TD7 - Rev0
RB

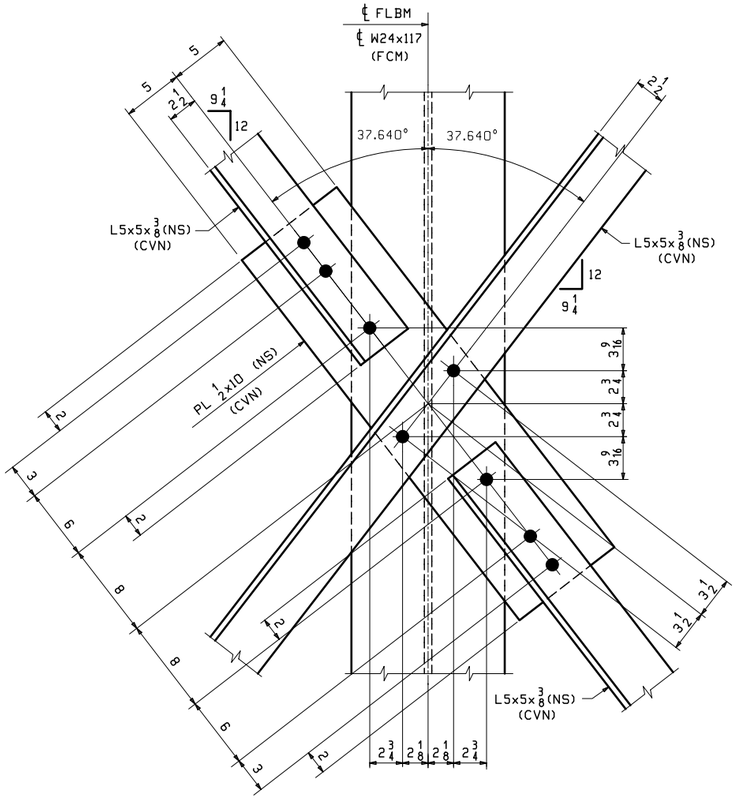

DETAIL AT CENTER OF FLOORBEAMS

(FOR SPAN 1)

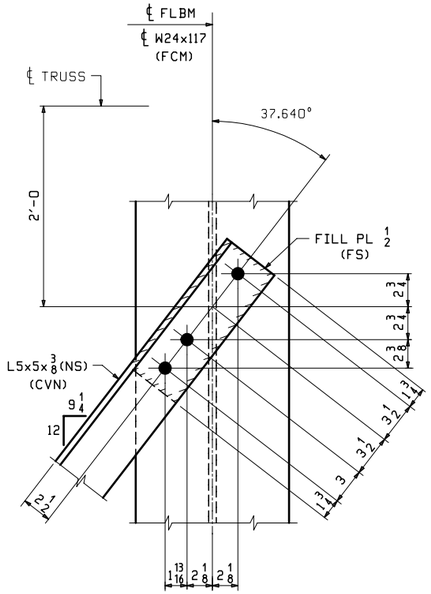

DETAIL AT END OF FLOORBEAMS

(FOR SPAN 1)

LATERAL BRACING @ BTM OF FLOORBEAMS FOR SPAN 1

(LOOKING UP AT FLOORBEAM BOTTOM FLANGE)

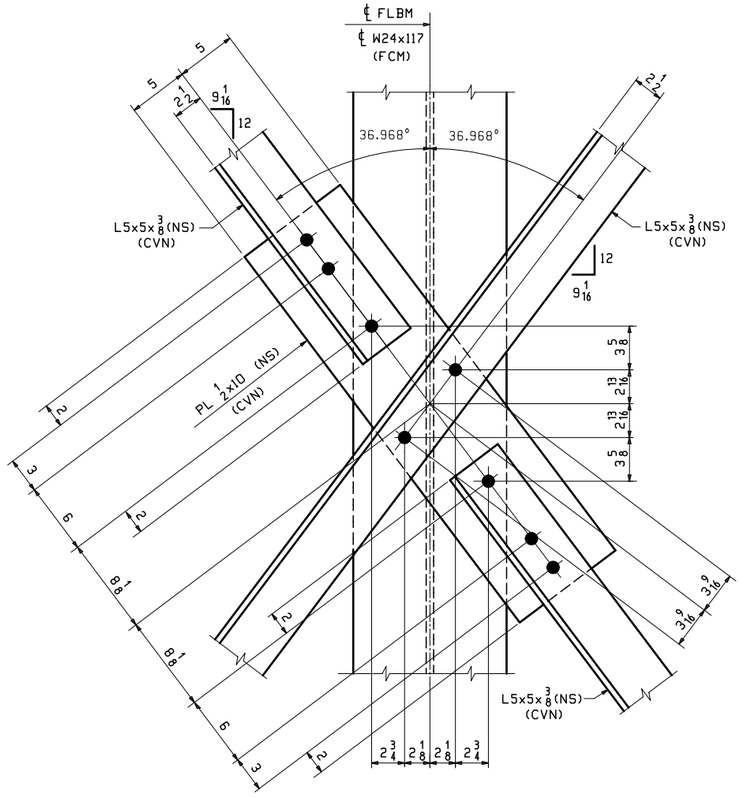

DETAIL AT CENTER OF FLOORBEAMS

(FOR SPAN 2)

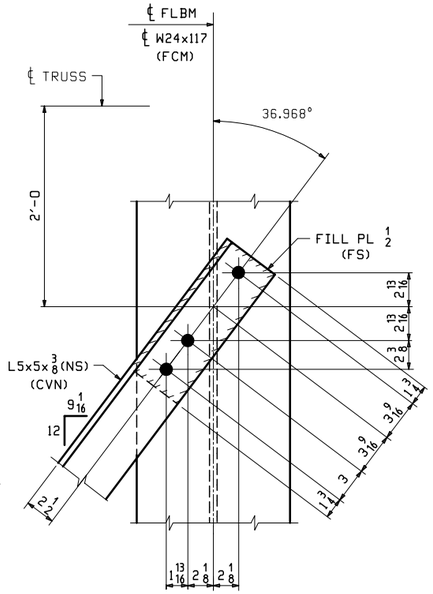

DETAIL AT END OF FLOORBEAMS

(FOR SPAN 2)

LATERAL BRACING @ BTM OF FLOORBEAMS FOR SPAN 2

(LOOKING UP AT FLOORBEAM BOTTOM FLANGE)

NOTES:

1. FCM INDICATES FRACTURE CRITICAL MATERIAL, CVN INDICATES CHARPY V-NOTCH TESTED MATERIAL. ALL STEEL (EXCEPT FOR BOLTS) SHALL BE HOT-DIP GALVANIZED AFTER FABRICATION.
2. BOLTS SHALL BE 7/8ø A325-1 GALV. ALL BOLTS SHALL BE INSTALLED WITH HEADS EXPOSED TO PUBLIC VIEW WITH ONE HARDENNED WASHER AND ONE DTI WASHER. BOLTS AND WASHERS SHALL BE MECHANICALLY GALVANIZED.

** NOTE **
THE PURPOSE OF THIS DRAWING IS TO COORDINATE GEOMETRIC CONTROL INFORMATION AND CONNECTION SPACING. THIS DWG IS SUBMITTED FOR INFORMATION ONLY & IS NOT INTENDED FOR SHOP FABRICATION. DETAIL DWGS WILL SHOW ALL WELDING AND DIMENSIONS REQ'D FOR FABRICATION.

REV.	DATE	REMARKS	DWN	CHK	APVL	SHOP
0						

MATERIAL:	SURFACE PREP. & PAINT:	HOLES:	SHOP BOLTS:
M270-50 (UN)	HOT-DIP GALV.	15/16ø	NONE

DESCRIPTION: LAYOUT FOR LATERAL BRACING

CASCO BAY STEEL STRUCTURES, INC.
1 WALLACE AVE. SOUTH PORTLAND, ME 04106
PHONE (207) 780-6722 FAX. (207) 780-6726
TENSOR 3285

STRUCTURE: TH-10 OVER OTTER CREEK PONY TRUSS BRIDGE	DRAWN: RB	DATE: 10/5/15
	CHKD: WJL	DATE: 10/15/15
LOCATION: RUTLAND CITY, VERMONT	JOB NO. 598	DWG NO. TD8
PROJ NO. BRF 3000 (19)		
CUSTOMER: KUBRICKY CONSTRUCTION CORP.		REV. △

WJL Fri, Oct 16, 2015 01:42:41 PM //server/jobs/3285/TD8 : Rev0

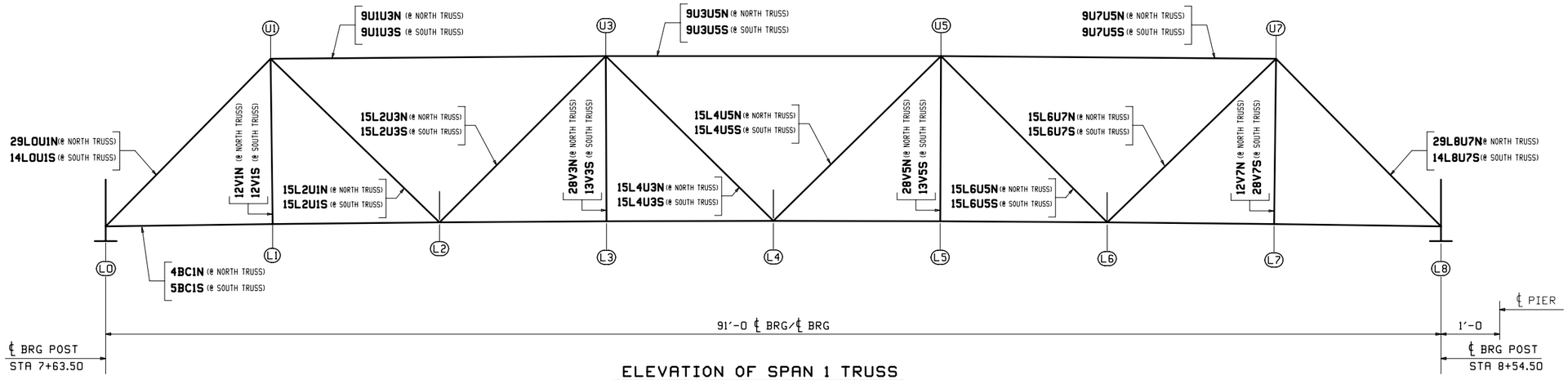

ELEVATION OF SPAN 1 TRUSS

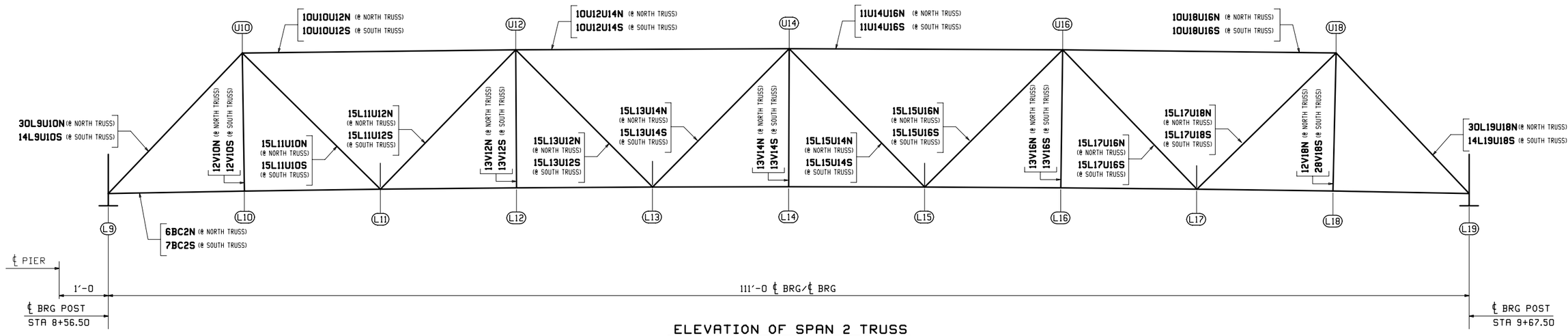

ELEVATION OF SPAN 2 TRUSS

NOTICE TO ERECTOR

BACKCHARGES FOR CORRECTIVE WORK OR REPLACED MATERIALS WILL NOT BE ACCEPTED UNLESS EXPRESSLY AUTHORIZED BY CASCO BAY STEEL STRUCTURES BEFORE ANY SUCH COSTS ARE INCURRED.

NOTE:

ALL STEEL SHALL BE ERECTED WITH THE "SHIPPING MARK" IN THE SAME RELATIVE POSITION AS SHOWN ON THE ERECTION PLAN.

NOTES:

1. ALL DIMENSIONS ARE GIVEN HORIZONTALLY IN THE FINAL POSITION OF BRIDGE.
2. FOR GENERAL NOTES SEE DWG. GN1.

WORK THIS DWG. WITH DWG. E2, E3, E4, E5 & E6

REV.	DATE	REMARKS	DWN	CHK	APVL	SHOP
0						

MATERIAL:	SURFACE PREP. & PAINT:	HOLES:	SHOP BOLTS:

DESCRIPTION: TRUSS ELEVATION FRAMING PLAN

CASCO BAY STEEL STRUCTURES, INC.
1 WALLACE AVE. PHONE (207) 780-6722
SOUTH PORTLAND, ME 04106 FAX. (207) 780-6726
TENSOR 3285

STRUCTURE: TH-10 OVER OTTER CREEK PONY TRUSS BRIDGE	DRAWN: RB	DATE: 1/5/16	
	CHKD: WL	DATE: 1/19/16	
LOCATION: RUTLAND CITY, VERMONT	JOB NO.	DWG NO.	
PROJ NO. BRF 3000 (19)	598	E1	
CUSTOMER: KUBRICKY CONSTRUCTION CORP.		REV. △	

W:\L Thu, Jan 21, 2016 03:23:30 PM c:\work\jobs\3285\E1 - Rev0

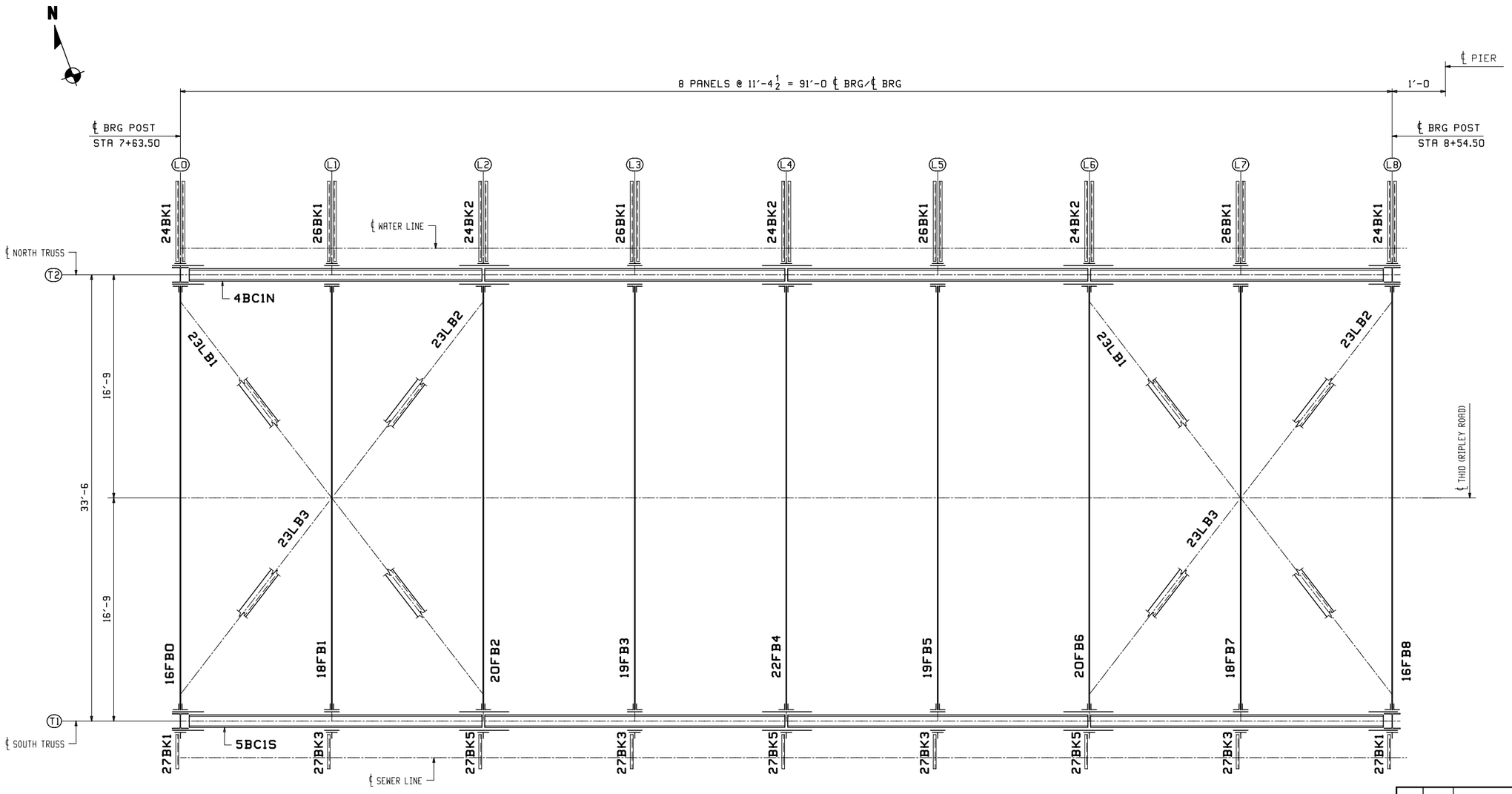

LOWER CHORD FRAMING PLAN

(FOR SPAN 1)

NOTICE TO ERECTOR

BACKCHARGES FOR CORRECTIVE WORK OR REPLACED MATERIALS WILL NOT BE ACCEPTED UNLESS EXPRESSLY AUTHORIZED BY CASCO BAY STEEL STRUCTURES BEFORE ANY SUCH COSTS ARE INCURRED.

NOTE:

ALL STEEL SHALL BE ERECTED WITH THE "SHIPPING MARK" IN THE SAME RELATIVE POSITION AS SHOWN ON THE ERECTION PLAN.

NOTES:

1. ALL DIMENSIONS ARE GIVEN HORIZONTALLY IN THE FINAL POSITION OF BRIDGE.
2. FOR GENERAL NOTES SEE DWG. GN1.

WORK THIS DWG. WITH DWG. E1, E3, E4, E5 & E6

REV.	DATE	REMARKS	DWN	CHK	APVL	SHOP
0						

MATERIAL:	SURFACE PREP. & PAINT:	HOLES:	SHOP BOLTS:

DESCRIPTION: LOWER CHORD FRAMING PLAN (SPAN 1)

CASCO BAY STEEL STRUCTURES, INC.
1 WALLACE AVE. SOUTH PORTLAND, ME 04106
PHONE (207) 780-6722 FAX. (207) 780-6726
TENSOR 3285

STRUCTURE: TH-10 OVER OTTER CREEK PONY TRUSS BRIDGE	DRAWN: RB	DATE: 1/5/16	
	CHKD: WJL	DATE: 1/19/16	
LOCATION: RUTLAND CITY, VERMONT	JOB NO.	DWG NO.	
PROJ NO. BRF 3000 (19)	598	E2	
CUSTOMER: KUBRICKY CONSTRUCTION CORP.		REV. △	

WJL Thu, Jan 21, 2016 03:03:52 pm c:\users\john\3285\E2 - Rev0

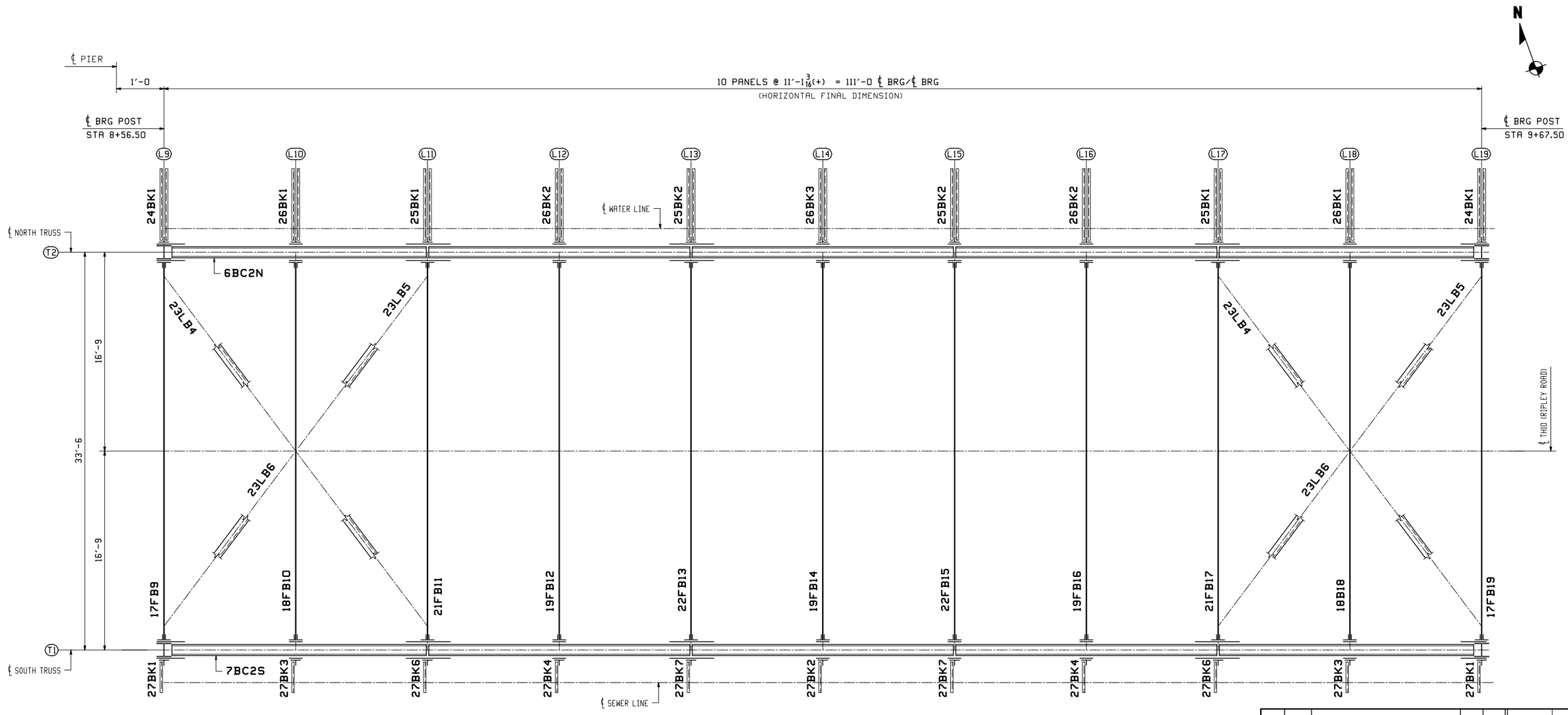

LOWER CHORD FRAMING PLAN

(FOR SPAN 2)

NOTICE TO ERECTOR

BACKCHARGES FOR CORRECTIVE WORK OR REPLACED MATERIALS WILL NOT BE ACCEPTED UNLESS EXPRESSLY AUTHORIZED BY CASCO BAY STEEL STRUCTURES BEFORE ANY SUCH COSTS ARE INCURRED.

NOTE:

ALL STEEL SHALL BE ERECTED WITH THE "SHIPPING MARK" IN THE SAME RELATIVE POSITION AS SHOWN ON THE ERECTION PLAN.

NOTES:

1. ALL DIMENSIONS ARE GIVEN HORIZONTALLY IN THE FINAL POSITION OF BRIDGE.
2. FOR GENERAL NOTES SEE DWG. GN1.

WORK THIS DWG. WITH DWG. E1, E2, E4, E5 & E6

REV.	DATE	REMARKS	DWN	CHK	APVL	SHOP
0						

MATERIAL:	SURFACE PREP. & PAINT:	HOLES:	SHOP BOLTS:

DESCRIPTION: LOWER CHORD FRAMING PLAN (SPAN 2)

CASCO BAY STEEL STRUCTURES, INC.
1 WALLACE AVE. SOUTH PORTLAND, ME 04106
PHONE (207) 780-6722 FAX. (207) 780-6726
TENSOR 3285

STRUCTURE: TH-10 OVER OTTER CREEK PONY TRUSS BRIDGE	DRAWN: RB	DATE: 1/5/16	
	CHKD: WJL	DATE: 1/19/16	
LOCATION: RUTLAND CITY, VERMONT	JOB NO.	DWG NO.	
PROJ NO. BRF 3000 (19)	598	E3	
CUSTOMER: KUBRICKY CONSTRUCTION CORP.		REV. △	

WJL Thu, Jan 21, 2016 03:24:30 PM c:\users\john\3285\E3 Rev0

FIELD BOLT LIST — A325 Type 1 BOLTS (MECH. GALV.)

LINE	NO REQ'D.	BOLT DIAM.	BOLT LEN.	BOLTS /CONN.	# OF CONN.	GRIP	THICKNESS OF PCS. CONNECTED						WASH CODE	PIECES CONNECTED AND REMARKS
1														CONNECTIONS AT THE ENDS
2														OF FLOORBEAMS:
3														END CONN. ANGLES TO WEBS
4	96	7/8	3 1/2	12	8	2 1/16	3/4	9/16	3/4				L1	@ 16FB0,16FB8,17FB9 & 17FB19
5														TOP & BTM ANGLES TO FLANGES
6	128	7/8	3 1/4	8	16	1 5/8	3/4	7/8					L1	@ 16FB0,16FB8,17FB9 & 17FB19
7														END CONN. ANGLES TO WEBS
8														@ 18FB1,18FB7,18FB10,18FB18
9														19FB3,19FB5,19FB12,19FB16
10	90	7/8	3	5	18	1 9/16	1/2	9/16	1/2				L1	& 19FB14
11														TOP WT's TO TOP FLANGES
12														@ 18FB1,18FB7,18FB10,18FB18
13														19FB3,19FB5,19FB12,19FB16
14	144	7/8	3	8	18	1 3/8	1/2	7/8					L1	& 19FB14
15														BTM WT's TO BTM FLANGES&FILL
16														@ 18FB1,18FB7,18FB10,18FB18
17														19FB3,19FB5,19FB12,19FB16
18	144	7/8	3 1/4	8	18	1 5/8	1/2	1/4	7/8				L1	& 19FB14
19														END CONN. ANGLES TO WEBS
20														@ 20FB2,20FB6,21FB11,21FB17
21	70	7/8	3	5	14	1 9/16	1/2	9/16	1/2				L1	22FB4,22FB13 & 22FB15
22														TOP & BTM WT's TO FLANGES
23														@ 20FB2,20FB6,21FB11,21FB17
24	112	7/8	3	4	28	1 3/8	1/2	7/8					L1	22FB4,22FB13 & 22FB15
25														
26														CONNECTIONS AT JOINT L0:
27														DIAGONALS 29L0U1N &
28	104	7/8	4	26	4	2 9/16	1 9/16	1					L1	14L0U1S TO GUSSET PLATE
29														FLBM 16FB0 TO GUSSET PLATE
30	80	7/8	4	40	2	2 7/16	3/4	1	11/16				L1	& POST AT (N & S)
31	8	7/8	3 3/4	4	2	2 5/16	5/8	1	11/16				L1	BRKT 24BK1 AT NORTH SIDE
32	4	7/8	3 3/4	4	1	2 5/16	5/8	1	11/16				L1	BRKT 27BK1 AT SOUTH SIDE
33														
34														CONNECTIONS AT JOINT L1:
35														VERTICALS 12V1N & 12V1S
36	40	7/8	3	20	2	1 7/16	1/2	3/16	3/4				L1	TO GUSSET PLATE & FILL
37														FLBM 18FB1 TOP WT TO GUSSET
38	16	7/8	3 3/4	8	2	2 1/4	13/16	3/4	3/16	1/2			L1	& VERTICALS (N & S)
39														FLBM 18FB1 ANGLES TO GUSSET
40	16	7/8	3 1/2	8	2	1 15/16	1/2	3/4	3/16	1/2			L1	& VERTICALS (N & S)
41														VERTICALS 12V1N & 12V1S
42	16	7/8	3	8	2	1 7/16	1/2	3/4	3/16				L1	TO G.PL & FILL @ FLBM 18FB1
43														FLBM 18FB1 ANGLES TO GUSSET
44	4	7/8	3 1/2	2	2	1 15/16	1/2	3/4	11/16				L1	& CHORD (N & S)
45														FLBM 18FB1 BTM WT TO GUSSET
46	16	7/8	3 3/4	8	2	2 1/4	13/16	3/4	11/16				L1	& CHORD (N & S)
47	4	7/8	2 3/4	4	1	1 1/8	5/8	1/2					L1	BRKT 26BK1 AT NORTH SIDE(T)
48	4	7/8	3 1/2	4	1	2 1/16	5/8	3/4	11/16				L1	BRKT 26BK1 AT NORTH SIDE(B)
49	4	7/8	3 1/2	4	1	2 1/16	5/8	3/4	11/16				L1	BRKT 27BK3 AT SOUTH SIDE
50														
51														CONNECTIONS AT JOINT L2:
52														DIAGONALS 15L2U1N &
53	56	7/8	3 1/2	14	4	1 15/16	5/8	1/16	1 1/4				L1	15L2U1S TO GUSSET & FILL
54														DIAGONALS 15L2U3N &
55	56	7/8	3 1/2	14	4	1 15/16	5/8	1/16	1 1/4				L1	15L2U3S TO GUSSET & FILL
56														FLBM 20FB2 TOP WT TO GUSSET
57	8	7/8	4 1/4	4	2	2 3/4	13/16	1 1/4	1/16	5/8			L1	& BLOCKING POST (N & S)
58														FLBM 20FB2 ANGLES TO GUSSET
59	16	7/8	4	8	2	2 7/16	1/2	1 1/4	1/16	5/8			L1	& BLOCKING POST (N & S)
60														

WASHER CODES
L1: 1 Flat, 1 Load Ind.
L1W @ head,hard wa. @ nut

FIELD BOLT LIST — A325 Type 1 BOLTS (MECH. GALV.)

LINE	NO REQ'D.	BOLT DIAM.	BOLT LEN.	BOLTS /CONN.	# OF CONN.	GRIP	THICKNESS OF PCS. CONNECTED						WASH CODE	PIECES CONNECTED AND REMARKS
61														
62														FLBM 20FB2 ANGLES TO GUSSET
63	4	7/8	4	2	2	2 7/16	1/2	1 1/4	11/16				L1	& CHORD (N & S)
64														FLBM 20FB2 BTM WT TO GUSSET
65	8	7/8	4 1/4	4	2	2 3/4	13/16	1 1/4	11/16				L1	& CHORD (N & S)
66	4	7/8	2 3/4	4	1	1 1/4	5/8	5/8					L1	BRKT 24BK2 AT NORTH SIDE(T)
67	4	7/8	4	4	1	2 9/16	5/8	1 1/4	11/16				L1	BRKT 24BK2 AT NORTH SIDE(B)
68	4	7/8	4	4	1	2 9/16	5/8	1 1/4	11/16				L1	BRKT 27BK5 AT SOUTH SIDE
69														
70														CONNECTIONS AT JOINT L3:
71														VERTICALS 28V3N & 13V3S
72	40	7/8	3	20	2	1 7/16	1/2	3/16	3/4				L1	TO GUSSET PLATE & FILL
73														FLBM 19FB3 TOP WT TO GUSSET
74	16	7/8	3 3/4	8	2	2 1/4	13/16	3/4	3/16	1/2			L1	& VERTICALS (N & S)
75														FLBM 19FB3 ANGLES TO GUSSET
76	16	7/8	3 1/2	8	2	1 15/16	1/2	3/4	3/16	1/2			L1	& VERTICALS (N & S)
77														VERTICALS 28V3N & 13V3S
78	16	7/8	3	8	2	1 7/16	1/2	3/4	3/16				L1	TO G.PL & FILL @ FLBM 19FB3
79														FLBM 19FB3 ANGLES TO GUSSET
80	4	7/8	3 1/2	2	2	1 15/16	1/2	3/4	11/16				L1	& CHORD (N & S)
81														FLBM 19FB3 BTM WT TO GUSSET
82	16	7/8	3 3/4	8	2	2 1/4	13/16	3/4	11/16				L1	& CHORD (N & S)
83	4	7/8	2 3/4	4	1	1 1/8	5/8	1/2					L1	BRKT 26BK1 AT NORTH SIDE(T)
84	4	7/8	3 1/2	4	1	2 1/16	5/8	3/4	11/16				L1	BRKT 26BK1 AT NORTH SIDE(B)
85	4	7/8	3 1/2	4	1	2 1/16	5/8	3/4	11/16				L1	BRKT 27BK3 AT SOUTH SIDE
86														
87														CONNECTIONS AT JOINT L4:
88														DIAGONALS 15L4U3N &
89	56	7/8	3 1/2	14	4	1 15/16	5/8	1/16	1 1/4				L1	15L4U3S TO GUSSET & FILL
90														DIAGONALS 15L4U5N &
91	56	7/8	3 1/2	14	4	1 15/16	5/8	1/16	1 1/4				L1	15L4U5S TO GUSSET & FILL
92														FLBM 22FB4 TOP WT TO GUSSET
93	8	7/8	4 1/4	4	2	2 3/4	13/16	1 1/4	1/16	5/8			L1	& BLOCKING POST (N & S)
94														FLBM 22FB4 ANGLES TO GUSSET
95	16	7/8	4	8	2	2 7/16	1/2	1 1/4	1/16	5/8			L1	& BLOCKING POST (N & S)
96														FLBM 22FB4 ANGLES TO GUSSET
97	4	7/8	4	2	2	2 7/16	1/2	1 1/4	11/16				L1	& CHORD (N & S)
98														FLBM 22FB4 BTM WT TO GUSSET
99	8	7/8	4 1/4	4	2	2 3/4	13/16	1 1/4	11/16				L1	& CHORD (N & S)
100	4	7/8	2 3/4	4	1	1 1/4	5/8	5/8					L1	BRKT 24BK2 AT NORTH SIDE(T)
101	4	7/8	4	4	1	2 9/16	5/8	1 1/4	11/16				L1	BRKT 24BK2 AT NORTH SIDE(B)
102	4	7/8	4	4	1	2 9/16	5/8	1 1/4	11/16				L1	BRKT 27BK5 AT SOUTH SIDE
103														
104														CONNECTIONS AT JOINT L5:
105														VERTICALS 28V5N & 13V5S
106	40	7/8	3	20	2	1 7/16	1/2	3/16	3/4				L1	TO GUSSET PLATE & FILL
107														FLBM 19FB5 TOP WT TO GUSSET
108	16	7/8	3 3/4	8	2	2 1/4	13/16	3/4	3/16	1/2			L1	& VERTICALS (N & S)
109														FLBM 19FB5 ANGLES TO GUSSET
110	16	7/8	3 1/2	8	2	1 15/16	1/2	3/4	3/16	1/2			L1	& VERTICALS (N & S)
111														VERTICALS 28V5N & 13V5S
112	16	7/8	3	8	2	1 7/16	1/2	3/4	3/16				L1	TO G.PL & FILL @ FLBM 19FB5
113														FLBM 19FB5 ANGLES TO GUSSET
114	4	7/8	3 1/2	2	2	1 15/16	1/2	3/4	11/16				L1	& CHORD (N & S)
115														FLBM 19FB5 BTM WT TO GUSSET
116	16	7/8	3 3/4	8	2	2 1/4	13/16	3/4	11/16				L1	& CHORD (N & S)
117	4	7/8	2 3/4	4	1	1 1/8	5/8	1/2					L1	BRKT 26BK1 AT NORTH SIDE(T)
118	4	7/8	3 1/2	4	1	2 1/16	5/8	3/4	11/16				L1	BRKT 26BK1 AT NORTH SIDE(B)
119	4	7/8	3 1/2	4	1	2 1/16	5/8	3/4	11/16				L1	BRKT 27BK3 AT SOUTH SIDE
120														

WASHER CODES
L1: 1 Flat, 1 Load Ind.

FIELD BOLT LIST — A325 Type 1 BOLTS (MECH. GALV.)

LINE	NO REQ'D.	BOLT DIAM.	BOLT LEN.	BOLTS /CONN.	# OF CONN.	GRIP	THICKNESS OF PCS. CONNECTED						WASH CODE	PIECES CONNECTED AND REMARKS
121														CONNECTIONS AT JOINT L6:
122														DIAGONALS 15L6U5N &
123	56	7/8	3 1/2	14	4	1 15/16	5/8	1/16	1 1/4				L1	15L6U5S TO GUSSET & FILL
124														DIAGONALS 15L6U7N &
125	56	7/8	3 1/2	14	4	1 15/16	5/8	1/16	1 1/4				L1	15L6U7S TO GUSSET & FILL
126														FLBM 20FB6 TOP WT TO GUSSET
127	8	7/8	4 1/4	4	2	2 3/4	13/16	1 1/4	1/16	5/8			L1	& BLOCKING POST (N & S)
128														FLBM 20FB6 ANGLES TO GUSSET
129	16	7/8	4	8	2	2 7/16	1/2	1 1/4	1/16	5/8			L1	& BLOCKING POST (N & S)
130														FLBM 20FB6 ANGLES TO GUSSET
131	4	7/8	4	2	2	2 7/16	1/2	1 1/4	11/16				L1	& CHORD (N & S)
132														FLBM 20FB6 BTM WT TO GUSSET
133	8	7/8	4 1/4	4	2	2 3/4	13/16	1 1/4	11/16				L1	& CHORD (N & S)
134	4	7/8	2 3/4	4	1	1 1/4	5/8	5/8					L1	BRKT 24BK2 AT NORTH SIDE(T)
135	4	7/8	4	4	1	2 9/16	5/8	1 1/4	11/16				L1	BRKT 24BK2 AT NORTH SIDE(B)
136	4	7/8	4	4	1	2 9/16	5/8	1 1/4	11/16				L1	BRKT 27BK5 AT SOUTH SIDE
137														
138														CONNECTIONS AT JOINT L7:
139														VERTICALS 12V7N & 28V7S
140	40	7/8	3	20	2	1 7/16	1/2	3/16	3/4				L1	TO GUSSET PLATE & FILL
141														FLBM 18FB7 TOP WT TO GUSSET
142	16	7/8	3 3/4	8	2	2 1/4	13/16	3/4	3/16	1/2			L1	& VERTICALS (N & S)
143														FLBM 18FB7 ANGLES TO GUSSET
144	16	7/8	3 1/2	8	2	1 15/16	1/2	3/4	3/16	1/2			L1	& VERTICALS (N & S)
145														VERTICALS 12V7N & 28V7S
146	16	7/8	3	8	2	1 7/16	1/2	3/4	3/16				L1	TO G.PL & FILL @ FLBM 18FB7
147														FLBM 18FB7 ANGLES TO GUSSET
148	4	7/8	3 1/2	2	2	1 15/16	1/2	3/4	11/16				L1	& CHORD (N & S)
149														FLBM 18FB7 BTM WT TO GUSSET
150	16	7/8	3 3/4	8	2	2 1/4	13/16	3/4	11/16				L1	& CHORD (N & S)
151	4	7/8	2 3/4	4	1	1 1/8	5/8	1/2					L1	BRKT 26BK1 AT NORTH SIDE(T)
152	4	7/8	3 1/2	4	1	2 1/16	5/8	3/4	11/16				L1	BRKT 26BK1 AT NORTH SIDE(B)
153	4	7/8	3 1/2	4	1	2 1/16	5/8	3/4	11/16				L1	BRKT 27BK3 AT SOUTH SIDE
154														
155														CONNECTIONS AT JOINT L8:
156														DIAGONALS 29L8U7N &
157	104	7/8	4	26	4	2 9/16	1 9/16	1					L1	14L8U7S TO GUSSET PLATE
158														FLBM 16FB8 TO GUSSET PLATE
159	80	7/8	4	40	2	2 7/16	3/4	1	11/16				L1	& POST AT (N & S)
160	8	7/8	3 3/4	4	2	2 5/16	5/8	1	11/16				L1	BRKT 24BK1 AT NORTH SIDE
161	4	7/8	3 3/4	4	1	2 5/16	5/8	1	11/16				L1	BRKT 27BK1 AT SOUTH SIDE
162														

WASHER CODES
L1: 1 Flat, 1 Load Ind.

FIELD BOLT LIST — A325 Type 1 BOLTS (MECH. GALV.)

LINE	NO REQ'D.	BOLT DIAM.	BOLT LEN.	BOLTS /CONN.	# OF CONN.	GRIP	THICKNESS OF PCS. CONNECTED						WASH CODE	PIECES CONNECTED AND REMARKS
163														CONNECTIONS AT JOINT U1:
164														TOP CHORDS 9U1U3N &
165	108	7/8	4 1/4	27	4	2 13/16	1 9/16	1 1/4					L1	9U1U3S TO GUSSET PLATE
166														DIAGONALS 29L0U1N &
167	92	7/8	4 1/4	23	4	2 13/16	1 9/16	1 1/4					L1	14L0U1S TO GUSSET PLATE
168														DIAGONALS 15L2U1N &
169	72	7/8	3 1/2	18	4	1 15/16	5/8	1/16	1 1/4				L1	15L2U1S TO GUSSET PL & FILL
170														VERTICALS 12V1N & 12V1S
171	104	7/8	3 1/2	26	4	1 15/16	1/2	3/16	1 1/4				L1	TO GUSSET PLATE & FILL
172														
173														CONNECTIONS AT JOINT U3:
174														TOP CHORDS 9U1U3N &
175	112	7/8	4 1/2	28	4	3 1/16	1 9/16	3/4	3/4				L1	9U1U3S TO G. PL & CHORD PL
176														TOP CHORDS 9U3U5N &
177	112	7/8	4 1/2	28	4	3 1/16	1 9/16	3/4	3/4				L1	9U3U5S TO G. PL & CHORD PL
178														DIAGONALS 15L2U3N &
179	56	7/8	3	14	4	1 7/16	5/8	1/16	3/4				L1	15L2U3S TO GUSSET PL & FILL
180														DIAGONALS 15L4U3N &
181	56	7/8	3	14	4	1 7/16	5/8	1/16	3/4				L1	15L4U3S TO GUSSET PL & FILL
182														VERTICALS 28V3N & 13V3S
183	80	7/8	3	20	4	1 7/16	1/2	3/16	3/4				L1	TO GUSSET PLATE & FILL
184														
185														CONNECTIONS AT JOINT U5:
186														TOP CHORDS 9U3U5N &
187	112	7/8	4 1/2	28	4	3 1/16	1 9/16	3/4	3/4				L1	9U3U5S TO G. PL & CHORD PL
188														TOP CHORDS 9U7U5N &
189	112	7/8	4 1/2	28	4	3 1/16	1 9/16	3/4	3/4				L1	9U7U5S TO G. PL & CHORD PL
190														DIAGONALS 15L4U5N &
191	56	7/8	3	14	4	1 7/16	5/8	1/16	3/4				L1	15L4U5S TO GUSSET PL & FILL
192														DIAGONALS 15L6U5N &
193	56	7/8	3	14	4	1 7/16	5/8	1/16	3/4				L1	15L6U5S TO GUSSET PL & FILL
194														VERTICALS 28V5N & 13V5S
195	80	7/8	3	20	4	1 7/16	1/2	3/16	3/4				L1	TO GUSSET PLATE & FILL
196														
197														CONNECTIONS AT JOINT U7:
198														TOP CHORDS 9U7U5N &
199	108	7/8	4 1/4	27	4	2 13/16	1 9/16	1 1/4					L1	9U7U5S TO GUSSET PLATE
200														DIAGONALS 29L8U7N &
201	92	7/8	4 1/4	23	4	2 13/16	1 9/16	1 1/4					L1	14L8U7S TO GUSSET PLATE
202														DIAGONALS 15L6U7N &
203	72	7/8	3 1/2	18	4	1 15/16	5/8	1/16	1 1/4				L1	15L6U7S TO GUSSET PL & FILL
204														VERTICALS 12V7N & 28V7S
205	104	7/8	3 1/2	26	4	1 15/16	1/2	3/16	1 1/4				L1	TO GUSSET PLATE & FILL

WASHER CODES
L1: 1 Flat, 1 Load Ind.

ERECTOR NOTE:

BOLT ORIENTATION SHALL BE SUCH THAT THE BOLT HEAD SHALL BE ON THE OUTSIDE OR EXPOSED SIDE OF THE STEEL MEMBER WHENEVER POSSIBLE.

ERECTOR NOTE:

ALL BOLTS MUST BE LOCATED IN ACCORDANCE WITH THE FIELD BOLT LIST. CASCO BAY STEEL STRUCTURES, INC. WILL NOT BE RESPONSIBLE FOR FURNISHING ADDITIONAL BOLTS OR ANY OTHER RELATED COSTS OR DAMAGES RESULTING FROM IMPROPER LOCATION OF BOLTS.

NOTE:

FOR GENERAL NOTES SEE DRAWING GN1.

WORK THIS DWG. WITH DWG. E1, E2, E3, E5 & E6

REV.	DATE	REMARKS	DWN	CHK	APVL	SHOP
0						

MATERIAL: | SURFACE PREP. & PAINT: | HOLES: | SHOP BOLTS:

DESCRIPTION: FIELD BOLTS

CASCO BAY STEEL STRUCTURES, INC.
1 WALLACE AVE. PHONE (207) 780-6722
SOUTH PORTLAND, ME 04106 FAX. (207) 780-6726
TENSOR 3285

STRUCTURE: TH-10 OVER OTTER CREEK PONY TRUSS BRIDGE
DRAWN: RB DATE: 1/5/16
CHKD: WJL DATE: 1/20/16
LOCATION: RUTLAND CITY, VERMONT
PROJ NO. BRF 3000 (19)
CUSTOMER: KUBRICKY CONSTRUCTION CORP.
JOB NO. 598
DWG NO. E4
REV. △

WJL Thu, Jan 21, 2016 03:46:23 PM /users/jobs/3285/E4 : Rev0

FIELD BOLT LIST — A325 Type 1 BOLTS (MECH. GALV.)

LINE	NO REQ'D.	BOLT DIAM.	BOLT LEN.	BOLTS /CONN.	# OF CONN.	GRIP	THICKNESS OF PCS. CONNECTED						WASH CODE	PIECES CONNECTED AND REMARKS
1														CONNECTIONS AT JOINT L9:
2														DIAGONALS 30L9U10N &
3	104	7/8	4	26	4	2 9/16	1 9/16	1					L1	14L9U10S TO GUSSET PLATE
4														FLBM 17FB9 TO GUSSET PLATE
5	80	7/8	4	40	2	2 7/16	3/4	1	11/16				L1	& POST AT (N & S)
6	8	7/8	3 3/4	4	2	2 5/16	5/8	1	11/16				L1	BRKT 24BK1 AT NORTH SIDE
7	4	7/8	3 3/4	4	1	2 5/16	5/8	1	11/16				L1	BRKT 27BK1 AT SOUTH SIDE
8														
9														CONNECTIONS AT JOINT L10:
10														VERTICALS 12V10N & 12V10S
11	40	7/8	3	20	2	1 7/16	1/2	3/16	3/4				L1	TO GUSSET PLATE & FILL
12														FLBM 18FB10 TOP WT TO GUSSET
13	16	7/8	3 3/4	8	2	2 1/4	13/16	3/4	3/16	1/2			L1	& VERTICALS (N & S)
14														FLBM 18FB10 ANGLES TO GUSSET
15	16	7/8	3 1/2	8	2	1 15/16	1/2	3/4	3/16	1/2			L1	& VERTICALS (N & S)
16														VERTICALS 12V10N & 12V10S
17	16	7/8	3	8	2	1 7/16	1/2	3/4	3/16				L1	TO G.PL & FILL @ FLBM 18FB10
18														FLBM 18FB10 ANGLES TO GUSSET
19	4	7/8	3 1/2	2	2	1 15/16	1/2	3/4	11/16				L1	& CHORD (N & S)
20														FLBM 18FB10 BTM WT TO GUSSET
21	16	7/8	3 3/4	8	2	2 1/4	13/16	3/4	11/16				L1	& CHORD (N & S)
22	4	7/8	2 3/4	4	1	1 1/8	5/8	1/2					L1	BRKT 26BK1 AT NORTH SIDE(T)
23	4	7/8	3 1/2	4	1	2 1/16	5/8	3/4	11/16				L1	BRKT 26BK1 AT NORTH SIDE(B)
24	4	7/8	3 1/2	4	1	2 1/16	5/8	3/4	11/16				L1	BRKT 27BK3 AT SOUTH SIDE
25														
26														CONNECTIONS AT JOINT L11:
27														DIAGONALS 15L11U10N &
28	72	7/8	3 3/4	18	4	2 1/4	5/8	1/8	1 1/2				L1	15L11U10S TO GUSSET & FILL
29														DIAGONALS 15L11U12N &
30	72	7/8	3 3/4	18	4	2 1/4	5/8	1/8	1 1/2				L1	15L11U12S TO GUSSET & FILL
31														FLBM 21FB11 TOP WT TO GUSSET
32	8	7/8	4 1/2	4	2	3 1/16	13/16	1 1/2	1/8	5/8			L1	& BLOCKING POST (N & S)
33														FLBM 21FB11 ANGLES TO GUSSET
34	16	7/8	4 1/4	8	2	2 3/4	1/2	1 1/2	1/8	5/8			L1	& BLOCKING POST (N & S)
35														FLBM 21FB11 ANGLES TO GUSSET
36	4	7/8	4 1/4	2	2	2 3/4	1/2	1 1/2	3/4				L1	& CHORD (N & S)
37														FLBM 21FB11 BTM WT TO GUSSET
38	8	7/8	4 1/2	4	2	3 1/16	13/16	1 1/2	3/4				L1	& CHORD (N & S)
39	4	7/8	2 3/4	4	1	1 1/4	5/8	5/8					L1	BRKT 25BK1 AT NORTH SIDE(T)
40	4	7/8	4 1/2	4	1	2 7/8	5/8	1 1/2	3/4				L1	BRKT 25BK1 AT NORTH SIDE(B)
41	4	7/8	4 1/2	4	1	2 7/8	5/8	1 1/2	3/4				L1	BRKT 27BK6 AT SOUTH SIDE
42														
43														CONNECTIONS AT JOINT L12:
44														VERTICALS 13V12N & 13V12S
45	40	7/8	3	20	2	1 1/2	1/2	1/4	3/4				L1	TO GUSSET PLATE & FILL
46														FLBM 19FB12 TOP WT TO GUSSET
47	16	7/8	3 3/4	8	2	2 5/16	13/16	3/4	1/4	1/2			L1	& VERTICALS (N & S)
48														FLBM 19FB12 ANGLES TO GUSSET
49	16	7/8	3 1/2	8	2	2	1/2	3/4	1/4	1/2			L1	& VERTICALS (N & S)
50														VERTICALS 13V12N & 13V12S
51	16	7/8	3	8	2	1 1/2	1/2	3/4	1/4				L1	TO G.PL & FILL @ FLBM 19FB12
52														FLBM 19FB12 ANGLES TO GUSSET
53	4	7/8	3 1/2	2	2	2	1/2	3/4	3/4				L1	& CHORD (N & S)
54														FLBM 19FB12 BTM WT TO GUSSET
55	16	7/8	3 3/4	8	2	2 5/16	13/16	3/4	3/4				L1	& CHORD (N & S)
56	4	7/8	2 3/4	4	1	1 1/8	5/8	1/2					L1	BRKT 26BK2 AT NORTH SIDE(T)
57	4	7/8	3 3/4	4	1	2 1/8	5/8	3/4	3/4				L1	BRKT 26BK2 AT NORTH SIDE(B)
58	4	7/8	3 3/4	4	1	2 1/8	5/8	3/4	3/4				L1	BRKT 27BK4 AT SOUTH SIDE
59														

WASHER CODES

L1: 1 Flat, 1 Load Ind.

LIW @ head,hard wa. @ nut

WJL Thu, Jan 21, 2016 03:46:55 PM /users/jobs/3285/E5 : Rev0

FIELD BOLT LIST — A325 Type 1 BOLTS (MECH. GALV.)

LINE	NO REQ'D.	BOLT DIAM.	BOLT LEN.	BOLTS /CONN.	# OF CONN.	GRIP	THICKNESS OF PCS. CONNECTED						WASH CODE	PIECES CONNECTED AND REMARKS
60														CONNECTIONS AT JOINT L13:
61														DIAGONALS 15L13U12N &
62	72	7/8	4 1/4	18	4	2 11/16	5/8	5/16	1 3/4				L1	15L13U12S TO GUSSET & FILL
63														DIAGONALS 15L13U14N &
64	72	7/8	4 1/4	18	4	2 11/16	5/8	5/16	1 3/4				L1	15L13U14S TO GUSSET & FILL
65														FLBM 22FB13 TOP WT TO GUSSET
66	8	7/8	5	4	2	3 1/2	13/16	1 3/4	5/16	5/8			L1	& BLOCKING POST (N & S)
67														FLBM 22FB13 ANGLES TO GUSSET
68	16	7/8	4 3/4	8	2	3 3/16	1/2	1 3/4	5/16	5/8			L1	& BLOCKING POST (N & S)
69														FLBM 22FB13 ANGLES TO GUSSET
70	4	7/8	4 3/4	2	2	3 3/16	1/2	1 3/4	15/16				L1	& CHORD (N & S)
71														FLBM 22FB13 BTM WT TO GUSSET
72	8	7/8	5	4	2	3 1/2	13/16	1 3/4	15/16				L1	& CHORD (N & S)
73	4	7/8	2 3/4	4	1	1 1/4	5/8	5/8					L1	BRKT 25BK2 AT NORTH SIDE(T)
74	4	7/8	4 3/4	4	1	3 5/16	5/8	1 3/4	15/16				L1	BRKT 25BK2 AT NORTH SIDE(B)
75	4	7/8	4 3/4	4	1	3 5/16	5/8	1 3/4	15/16				L1	BRKT 27BK7 AT SOUTH SIDE
76														
77														CONNECTIONS AT JOINT L14:
78														VERTICALS 13V14N & 13V14S
79	40	7/8	3 1/4	20	2	1 11/16	1/2	7/16	3/4				L1	TO GUSSET PLATE & FILL
80														FLBM 19FB14 TOP WT TO GUSSET
81	16	7/8	4	8	2	2 1/2	13/16	3/4	7/16	1/2			L1	& VERTICALS (N & S)
82														FLBM 19FB14 ANGLES TO GUSSET
83	16	7/8	3 3/4	8	2	2 3/16	1/2	3/4	7/16	1/2			L1	& VERTICALS (N & S)
84														VERTICALS 13V14N & 13V14S
85	16	7/8	3 1/4	8	2	1 11/16	1/2	3/4	7/16				L1	TO G.PL & FILL @ FLBM 19FB14
86														FLBM 19FB14 ANGLES TO GUSSET
87	4	7/8	3 3/4	2	2	2 3/16	1/2	3/4	15/16				L1	& CHORD (N & S)
88														FLBM 19FB14 BTM WT TO GUSSET
89	16	7/8	4	8	2	2 1/2	13/16	3/4	15/16				L1	& CHORD (N & S)
90	4	7/8	2 3/4	4	1	1 1/8	5/8	1/2					L1	BRKT 26BK3 AT NORTH SIDE(T)
91	4	7/8	3 3/4	4	1	2 5/16	5/8	3/4	15/16				L1	BRKT 26BK3 AT NORTH SIDE(B)
92	4	7/8	3 3/4	4	1	2 5/16	5/8	3/4	15/16				L1	BRKT 27BK2 AT SOUTH SIDE
93														
94														CONNECTIONS AT JOINT L15:
95														DIAGONALS 15L15U14N &
96	72	7/8	4 1/4	18	4	2 11/16	5/8	5/16	1 3/4				L1	15L15U14S TO GUSSET & FILL
97														DIAGONALS 15L15U16N &
98	72	7/8	4 1/4	18	4	2 11/16	5/8	5/16	1 3/4				L1	15L15U16S TO GUSSET & FILL
99														FLBM 22FB15 TOP WT TO GUSSET
100	8	7/8	5	4	2	3 1/2	13/16	1 3/4	5/16	5/8			L1	& BLOCKING POST (N & S)
101														FLBM 22FB15 ANGLES TO GUSSET
102	16	7/8	4 3/4	8	2	3 3/16	1/2	1 3/4	5/16	5/8			L1	& BLOCKING POST (N & S)
103														FLBM 22FB15 ANGLES TO GUSSET
104	4	7/8	4 3/4	2	2	3 3/16	1/2	1 3/4	15/16				L1	& CHORD (N & S)
105														FLBM 22FB15 BTM WT TO GUSSET
106	8	7/8	5	4	2	3 1/2	13/16	1 3/4	15/16				L1	& CHORD (N & S)
107	4	7/8	2 3/4	4	1	1 1/4	5/8	5/8					L1	BRKT 25BK2 AT NORTH SIDE(T)
108	4	7/8	4 3/4	4	1	3 5/16	5/8	1 3/4	15/16				L1	BRKT 25BK2 AT NORTH SIDE(B)
109	4	7/8	4 3/4	4	1	3 5/16	5/8	1 3/4	15/16				L1	BRKT 27BK7 AT SOUTH SIDE
110														
111														CONNECTIONS AT JOINT L16:
112														VERTICALS 13V16N & 13V16S
113	40	7/8	3	20	2	1 1/2	1/2	1/4	3/4				L1	TO GUSSET PLATE & FILL
114														FLBM 19FB16 TOP WT TO GUSSET
115	16	7/8	3 3/4	8	2	2 5/16	13/16	3/4	1/4	1/2			L1	& VERTICALS (N & S)
116														

WASHER CODES

L1: 1 Flat, 1 Load Ind.

FIELD BOLT LIST — A325 Type 1 BOLTS (MECH. GALV.)

LINE	NO REQ'D.	BOLT DIAM.	BOLT LEN.	BOLTS /CONN.	# OF CONN.	GRIP	THICKNESS OF PCS. CONNECTED						WASH CODE	PIECES CONNECTED AND REMARKS
117														
118														FLBM 19FB16 ANGLES TO GUSSET
119	16	7/8	3 1/2	8	2	2	1/2	3/4	1/4	1/2			L1	& VERTICALS (N & S)
120														VERTICALS 13V16N & 13V16S
121	16	7/8	3	8	2	1 1/2	1/2	3/4	1/4				L1	TO G.PL & FILL @ FLBM 19FB16
122														FLBM 19FB16 ANGLES TO GUSSET
123	4	7/8	3 1/2	2	2	2	1/2	3/4	3/4				L1	& CHORD (N & S)
124														FLBM 19FB16 BTM WT TO GUSSET
125	16	7/8	3 3/4	8	2	2 5/16	13/16	3/4	3/4				L1	& CHORD (N & S)
126	4	7/8	2 3/4	4	1	1 1/8	5/8	1/2					L1	BRKT 26BK2 AT NORTH SIDE(T)
127	4	7/8	3 3/4	4	1	2 1/8	5/8	3/4	3/4				L1	BRKT 26BK2 AT NORTH SIDE(B)
128	4	7/8	3 3/4	4	1	2 1/8	5/8	3/4	3/4				L1	BRKT 27BK4 AT SOUTH SIDE
129														
130														CONNECTIONS AT JOINT L17:
131														DIAGONALS 15L17U16N &
132	72	7/8	3 3/4	18	4	2 1/4	5/8	1/8	1 1/2				L1	15L17U16S TO GUSSET & FILL
133														DIAGONALS 15L17U18N &
134	72	7/8	3 3/4	18	4	2 1/4	5/8	1/8	1 1/2				L1	15L17U18S TO GUSSET & FILL
135														FLBM 21FB17 TOP WT TO GUSSET
136	8	7/8	4 1/2	4	2	3 1/16	13/16	1 1/2	1/8	5/8			L1	& BLOCKING POST (N & S)
137														FLBM 21FB17 ANGLES TO GUSSET
138	16	7/8	4 1/4	8	2	2 3/4	1/2	1 1/2	1/8	5/8			L1	& BLOCKING POST (N & S)
139														FLBM 21FB17 ANGLES TO GUSSET
140	4	7/8	4 1/4	2	2	2 3/4	1/2	1 1/2	3/4				L1	& CHORD (N & S)
141														FLBM 21FB17 BTM WT TO GUSSET
142	8	7/8	4 1/2	4	2	3 1/16	13/16	1 1/2	3/4				L1	& CHORD (N & S)
143	4	7/8	2 3/4	4	1	1 1/4	5/8	5/8					L1	BRKT 25BK1 AT NORTH SIDE(T)
144	4	7/8	4 1/2	4	1	2 7/8	5/8	1 1/2	3/4				L1	BRKT 25BK1 AT NORTH SIDE(B)
145	4	7/8	4 1/2	4	1	2 7/8	5/8	1 1/2	3/4				L1	BRKT 27BK6 AT SOUTH SIDE
146														
147														CONNECTIONS AT JOINT L18:
148														VERTICALS 12V18N & 28V18S
149	40	7/8	3	20	2	1 7/16	1/2	3/16	3/4				L1	TO GUSSET PLATE & FILL
150														FLBM 18FB18 TOP WT TO GUSSET
151	16	7/8	3 3/4	8	2	2 1/4	13/16	3/4	3/16	1/2			L1	& VERTICALS (N & S)
152														FLBM 18FB18 ANGLES TO GUSSET
153	16	7/8	3 1/2	8	2	1 15/16	1/2	3/4	3/16	1/2			L1	& VERTICALS (N & S)
154														VERTICALS 12V18N & 28V18S
155	16	7/8	3	8	2	1 7/16	1/2	3/4	3/16				L1	TO G.PL & FILL @ FLBM 18FB18
156														FLBM 18FB18 ANGLES TO GUSSET
157	4	7/8	3 1/2	2	2	1 15/16	1/2	3/4	11/16				L1	& CHORD (N & S)
158														FLBM 18FB18 BTM WT TO GUSSET
159	16	7/8	3 3/4	8	2	2 1/4	13/16	3/4	11/16				L1	& CHORD (N & S)
160	4	7/8	2 3/4	4	1	1 1/8	5/8	1/2					L1	BRKT 26BK1 AT NORTH SIDE(T)
161	4	7/8	3 1/2	4	1	2 1/16	5/8	3/4	11/16				L1	BRKT 26BK1 AT NORTH SIDE(B)
162	4	7/8	3 1/2	4	1	2 1/16	5/8	3/4	11/16				L1	BRKT 27BK3 AT SOUTH SIDE
163														
164														CONNECTIONS AT JOINT L19:
165														DIAGONALS 30L19U18N &
166	104	7/8	4	26	4	2 9/16	1 9/16	1					L1	14L19U18S TO GUSSET PLATE
167														FLBM 17FB19 TO GUSSET PLATE
168	80	7/8	4	40	2	2 7/16	3/4	1	11/16				L1	& POST AT (N & S)
169	8	7/8	3 3/4	4	2	2 5/16	5/8	1	11/16				L1	BRKT 24BK1 AT NORTH SIDE
170	4	7/8	3 3/4	4	1	2 5/16	5/8	1	11/16				L1	BRKT 27BK1 AT SOUTH SIDE
171														

WASHER CODES

L1: 1 Flat, 1 Load Ind.

FIELD BOLT LIST — A325 Type 1 BOLTS (MECH. GALV.)

LINE	NO REQ'D.	BOLT DIAM.	BOLT LEN.	BOLTS /CONN.	# OF CONN.	GRIP	THICKNESS OF PCS. CONNECTED						WASH CODE	PIECES CONNECTED AND REMARKS
172														LATERAL BRACING CONNECTIONS:
173														
174														CENTER GUSSET PLATES TO
175	16	7/8	3 1/4	4	4	1 3/4	3/8	1/2	7/8				L1	DIAGONALS & FLBM BTM FLG
176														ENDS OF DIAGONALS 23LB2,
177														23LB3, 23LB5 & 23LB6
178	16	7/8	2 1/2	2	8	7/8	3/8	1/2					L1	TO CENTER GUSSET PLATE
179														ENDS OF DIAGONALS
180														23LB1 THRU 23LB6 TO
181	48	7/8	3 1/4	3	16	1 3/4	3/8	1/2	7/8				L1	FLBM BOTTOM FLG
182														

WASHER CODES

L1: 1 Flat, 1 Load Ind.

ERECTOR NOTE:

BOLT ORIENTATION SHALL BE SUCH THAT THE BOLT HEAD SHALL BE ON THE OUTSIDE OR EXPOSED SIDE OF THE STEEL MEMBER WHENEVER POSSIBLE.

ERECTOR NOTE:

ALL BOLTS MUST BE LOCATED IN ACCORDANCE WITH THE FIELD BOLT LIST. CASCO BAY STEEL STRUCTURES, INC. WILL NOT BE RESPONSIBLE FOR FURNISHING ADDITIONAL BOLTS OR ANY OTHER RELATED COSTS OR DAMAGES RESULTING FROM IMPROPER LOCATION OF BOLTS.

NOTE:

FOR GENERAL NOTES SEE DRAWING GN1.

WORK THIS DWG. WITH DWG. E1, E2, E3, E4 & E6

REV.	DATE	REMARKS	DWN	CHK	APVL	SHOP
0						

MATERIAL: | SURFACE PREP. & PAINT: | HOLES: | SHOP BOLTS:

DESCRIPTION: FIELD BOLTS

CASCO BAY STEEL STRUCTURES, INC.
1 WALLACE AVE. PHONE (207) 780-6722
SOUTH PORTLAND, ME 04106 FAX. (207) 780-6726
TENSOR 3285

STRUCTURE: TH-10 OVER OTTER CREEK PONY TRUSS BRIDGE

DRAWN: RB DATE: 1/5/16

CHKD: WJL DATE: 1/20/16

LOCATION: RUTLAND CITY, VERMONT

PROJ NO. BRF 3000 (19)

CUSTOMER: KUBRICKY CONSTRUCTION CORP.

JOB NO. 598

DWG NO. E5

REV. △

FIELD BOLT LIST — A325 Type 1 BOLTS (MECH. GALV.)

LINE	NO REQ'D.	BOLT DIAM.	BOLT LEN.	BOLTS/CONN.	# OF CONN.	GRIP	THICKNESS OF PCS. CONNECTED						WASH CODE	PIECES CONNECTED AND REMARKS
1														CONNECTIONS AT JOINT U10:
2														TOP CHORDS 10U10U12N &
3	108	7/8	4 1/4	27	4	2 13/16	1 9/16	1 1/4					L1	10U10U12S TO GUSSET PLATE
4														DIAGONALS 3DL9U10N &
5	92	7/8	4 1/4	23	4	2 13/16	1 9/16	1 1/4					L1	14L9U10S TO GUSSET PLATE
6														DIAGONALS 15L11U10N &
7	72	7/8	3 1/2	18	4	1 15/16	5/8	1/16	1 1/4				L1	15L11U10S TO GUSS. PL & FILL
8														VERTICALS 12V10N & 12V10S
9	104	7/8	3 1/2	26	4	1 15/16	1/2	3/16	1 1/4				L1	TO GUSSET PLATE & FILL
10														
11														CONNECTIONS AT JOINT U12:
12														TOP CHORDS 10U10U12N &
13	112	7/8	5	28	4	3 9/16	1 9/16	1/2	3/4	3/4			L1	10U10U12S TO G.PL & CHORD PL
14														TOP CHORDS 10U12U14N &
15	160	7/8	5	40	4	3 9/16	2 1/16	3/4	3/4				L1	10U12U14S TO G.PL & CHORD PL
16														DIAGONALS 15L11U12N &
17	72	7/8	3 1/2	18	4	1 15/16	5/8	9/16	3/4				L1	15L11U12S TO GUSS. PL & FILL
18														DIAGONALS 15L13U12N &
19	72	7/8	3 1/2	18	4	1 15/16	5/8	9/16	3/4				L1	15L13U12S TO GUSS. PL & FILL
20														VERTICALS 13V12N & 13V12S
21	80	7/8	3 1/2	20	4	1 15/16	1/2	11/16	3/4				L1	TO GUSSET PLATE & FILL
22														
23														CONNECTIONS AT JOINT U14:
24														TOP CHORDS 10U12U14N &
25	160	7/8	5 1/2	40	4	3 13/16	2 1/16	3/4	1				L1	10U12U14S TO G.PL & CHORD PL
26														TOP CHORDS 11U14U16N &
27	160	7/8	5 1/2	40	4	3 13/16	2 1/16	3/4	1				L1	11U14U16S TO G.PL & CHORD PL
28														DIAGONALS 15L13U14N &
29	72	7/8	3 1/2	18	4	1 15/16	5/8	9/16	3/4				L1	15L13U14S TO GUSS. PL & FILL
30														DIAGONALS 15L15U14N &
31	72	7/8	3 1/2	18	4	1 15/16	5/8	9/16	3/4				L1	15L15U14S TO GUSS. PL & FILL
32														VERTICALS 13V14N & 13V14S
33	80	7/8	3 1/2	20	4	1 15/16	1/2	11/16	3/4				L1	TO GUSSET PLATE & FILL
34														
35														CONNECTIONS AT JOINT U16:
36														TOP CHORDS 11U14U16N &
37	160	7/8	5	40	4	3 9/16	2 1/16	3/4	3/4				L1	11U14U16S TO G.PL & CHORD PL
38														TOP CHORDS 10U18U16N &
39	112	7/8	5	28	4	3 9/16	1 9/16	1/2	3/4	3/4			L1	10U18U16S TO G.PL & CHORD PL
40														DIAGONALS 15L15U16N &
41	72	7/8	3 1/2	18	4	1 15/16	5/8	9/16	3/4				L1	15L15U16S TO GUSS. PL & FILL
42														DIAGONALS 15L17U16N &
43	72	7/8	3 1/2	18	4	1 15/16	5/8	9/16	3/4				L1	15L17U16S TO GUSS. PL & FILL
44														VERTICALS 13V16N & 13V16S
45	80	7/8	3 1/2	20	4	1 15/16	1/2	11/16	3/4				L1	TO GUSSET PLATE & FILL
46														
47														CONNECTIONS AT JOINT U18:
48														TOP CHORDS 10U18U16N &
49	108	7/8	4 1/4	27	4	2 13/16	1 9/16	1 1/4					L1	10U18U16S TO GUSSET PLATE
50														DIAGONALS 3DL19U18N &
51	92	7/8	4 1/4	23	4	2 13/16	1 9/16	1 1/4					L1	14L19U18S TO GUSSET PLATE
52														DIAGONALS 15L17U18N &
53	72	7/8	3 1/2	18	4	1 15/16	5/8	1/16	1 1/4				L1	15L17U18S TO GUSS. PL & FILL
54														VERTICALS 12V18N & 28V18S
55	104	7/8	3 1/2	26	4	1 15/16	1/2	3/16	1 1/4				L1	TO GUSSET PLATE & FILL
56														

WASHER CODES

L1: 1 Flat, 1 Load Ind.
LIW @ head,hard wa. @ nut

FIELD BOLT SUMMARY — 2% + 2 ADDED, MIN. 2 EXTRA

LINE	NO. OF BOLTS	BOLT DIAM.	TYPE	BOLT LEN	ACTUAL COUNT	REMARKS
1	18	7/8	A325 Type 1	2 1/2	16	(MECH. GALV.)
2	67	7/8	"	2 3/4	64	(MECH. GALV.)
3	1275	7/8		3	1248	(MECH. GALV.)
4	402	7/8		3 1/4	392	(MECH. GALV.)
5	2058	7/8		3 1/2	2016	(MECH. GALV.)
6	651	7/8		3 3/4	636	(MECH. GALV.)
7	871	7/8		4	852	(MECH. GALV.)
8	1202	7/8		4 1/4	1176	(MECH. GALV.)
9	508	7/8		4 1/2	496	(MECH. GALV.)
10	59	7/8		4 3/4	56	(MECH. GALV.)
11	590	7/8	"	5	576	(MECH. GALV.)
12	328	7/8	A325 Type 1	5 1/2	320	(MECH. GALV.)
13						
14	8029	Hard Flat Washers for 7/8 ø BOLT			(ACTUAL 7848)	(MECH. GALV.)
15	8029	Load Ind. Washers for 7/8 ø BOLT			(ACTUAL 7848)	(MECH. GALV.)
16						
17						
18						

ERECTOR NOTE:

BOLT ORIENTATION SHALL BE SUCH THAT THE BOLT HEAD SHALL BE ON THE OUTSIDE OR EXPOSED SIDE OF THE STEEL MEMBER WHENEVER POSSIBLE.

ERECTOR NOTE:

ALL BOLTS MUST BE LOCATED IN ACCORDANCE WITH THE FIELD BOLT LIST. CASCO BAY STEEL STRUCTURES, INC. WILL NOT BE RESPONSIBLE FOR FURNISHING ADDITIONAL BOLTS OR ANY OTHER RELATED COSTS OR DAMAGES RESULTING FROM IMPROPER LOCATION OF BOLTS.

NOTE:

FOR GENERAL NOTES SEE DRAWING GN1.

WORK THIS DWG. WITH DWG. E1, E2, E3, E4 & E5

REV.	DATE	REMARKS	DWN	CHK	APVL	SHOP
0						

MATERIAL: | SURFACE PREP. & PAINT: | HOLES: | SHOP BOLTS:

DESCRIPTION: FIELD BOLTS

CASCO BAY STEEL STRUCTURES, INC.
1 WALLACE AVE. SOUTH PORTLAND, ME 04106
PHONE (207) 780-6722 FAX. (207) 780-6726
TENSOR 3285

STRUCTURE: TH-10 OVER OTTER CREEK PONY TRUSS BRIDGE

DRAWN: RB DATE: 1/5/16
CHKD: WJL DATE: 1/20/16

LOCATION: RUTLAND CITY, VERMONT
PROJ NO. BRF 3000 (19)
CUSTOMER: KUBRICKY CONSTRUCTION CORP.

JOB NO. 598
DWG NO. E6
REV.

C:\Users\John\3285-E6.dwg Thu, Jan 21, 2016 03:48:14 PM WJL

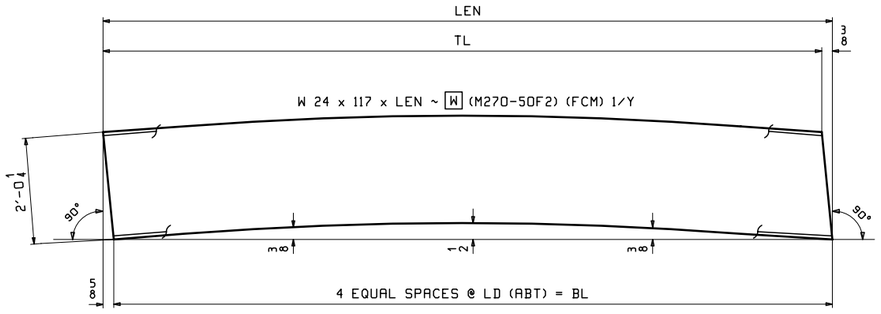

CAMBER DIAGRAM FOR FLOORBEAMS

(LOOKING WEST)

SHIPPING MARK	LD	BL	TL	LEN	W
16FB0	8'-0 1/8	32'-0 7/16	32'-0 11/16	32'-1 1/16	a16
16FB8	8'-0 1/8	32'-0 7/16	32'-0 11/16	32'-1 1/16	b16
17FB9	8'-0 1/8	32'-0 7/16	32'-0 11/16	32'-1 1/16	a17
17FB19	8'-0 1/8	32'-0 7/16	32'-0 11/16	32'-1 1/16	b17
18FB1	7'-11 5/8	31'-10 7/16	31'-10 11/16	31'-11 1/16	a18
18FB7	7'-11 5/8	31'-10 7/16	31'-10 11/16	31'-11 1/16	a18
18FB10	7'-11 5/8	31'-10 7/16	31'-10 11/16	31'-11 1/16	b18
18FB18	7'-11 5/8	31'-10 7/16	31'-10 11/16	31'-11 1/16	b18
19FB3	7'-11 5/8	31'-10 7/16	31'-10 11/16	31'-11 1/16	a19
19FB5	7'-11 5/8	31'-10 7/16	31'-10 11/16	31'-11 1/16	a19
19FB12	7'-11 9/16	31'-10 5/16	31'-10 9/16	31'-10 15/16	b19
19FB16	7'-11 9/16	31'-10 5/16	31'-10 9/16	31'-10 15/16	b19
19FB14	7'-11 1/2	31'-9 15/16	31'-10 3/16	31'-10 9/16	c19
20FB2	7'-11 3/8	31'-9 7/16	31'-9 11/16	31'-10 1/16	a20
20FB6	7'-11 3/8	31'-9 7/16	31'-9 11/16	31'-10 1/16	b20
21FB11	7'-11 3/16	31'-8 13/16	31'-9 1/16	31'-9 7/16	a21
21FB17	7'-11 3/16	31'-8 13/16	31'-9 1/16	31'-9 7/16	b21
22FB4	7'-11 3/8	31'-9 7/16	31'-9 11/16	31'-10 1/16	a22
22FB13	7'-11	31'-7 15/16	31'-8 3/16	31'-8 9/16	b22
22FB15	7'-11	31'-7 15/16	31'-8 3/16	31'-8 9/16	b22

NOTES:
1. FOR GENERAL NOTES SEE GN1.
2. FCM - DENOTES FRACTURE CRITICAL MATERIAL.

REV.	DATE	REMARKS	DWN	CHK	APVL	SHOP
0						

MATERIAL:	SURFACE PREP. & PAINT:	HOLES:	SHOP BOLTS:
M270-50	HOT-DIP GALV.	NONE	NONE

DESCRIPTION: FLOORBEAM CAMBER DIAGRAMS

CASCO BAY STEEL STRUCTURES, INC.
1 WALLACE AVE. PHONE (207) 780-6722
SOUTH PORTLAND, ME 04106 FAX. (207) 780-6726
TENSOR 3285

STRUCTURE:	DRAWN:	DATE:
TH-10 OVER OTTER CREEK PONY TRUSS BRIDGE	RB	1/9/16
	CHKD: WJL	DATE: 1/11/16
LOCATION: RUTLAND CITY, VERMONT	JOB NO.	DWG NO.
PROJ NO. BRF 3000 (19)	598	C1
CUSTOMER: KUBRICKY CONSTRUCTION CORP.		REV. △

WJL Thu, Jan 21, 2016 03:50:18 PM J:\users\jobs\3285\C1 - Rev0

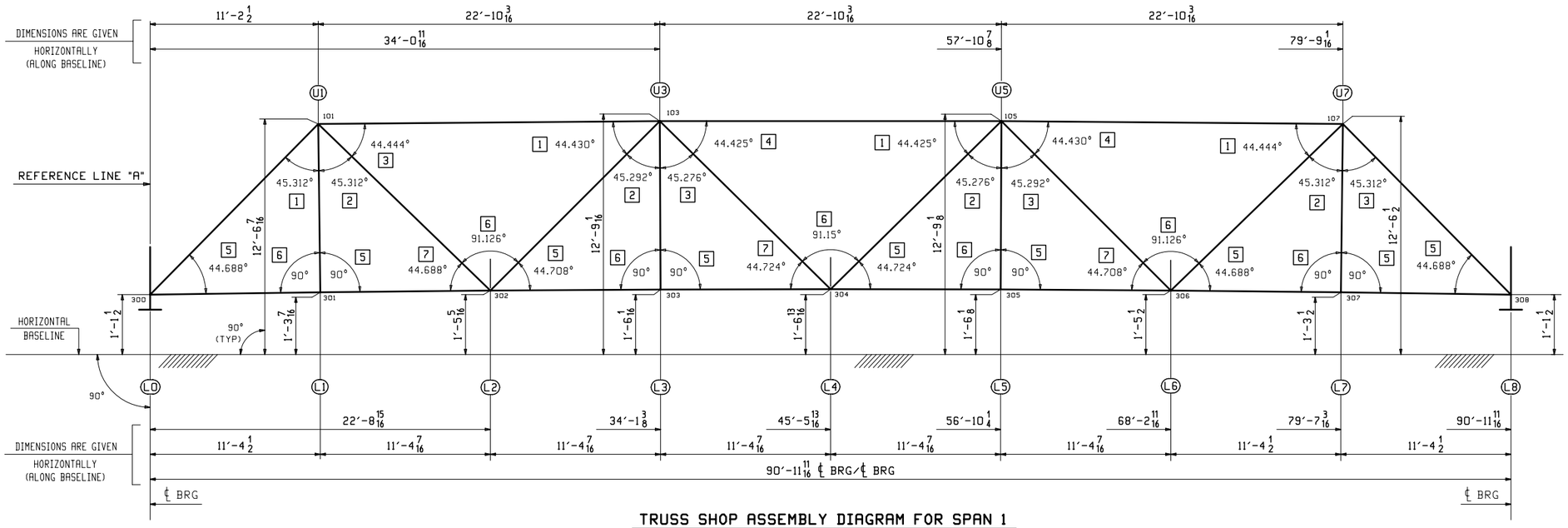

TRUSS SHOP ASSEMBLY DIAGRAM FOR SPAN 1

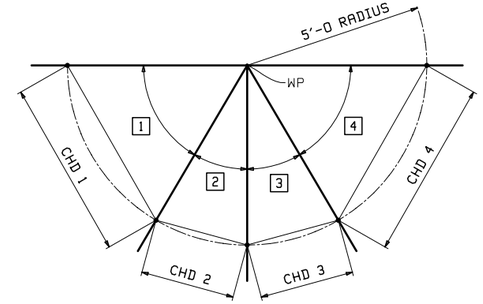

TYPICAL TOP CHORD JOINT DETAIL

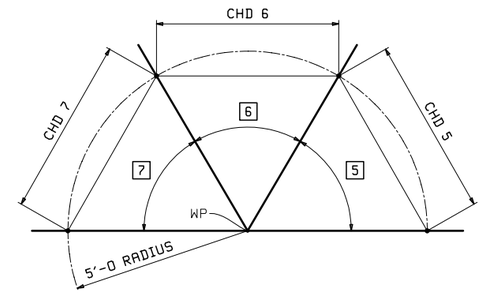

TYPICAL BOTTOM CHORD JOINT DETAIL

TOP CHORD				
PANEL POINT	CHD 1	CHD 2	CHD 3	CHD 4
(101) U1	3′-10 1/4	3′-10 1/4	3′-9 3/8	
(103) U3	3′-9 3/8	3′-10 3/16	3′-10 3/16	3′-9 3/8
(105) U5	3′-9 3/8	3′-10 3/16	3′-10 3/16	3′-9 3/8
(107) U7	3′-9 3/8	3′-10 1/4	3′-10 1/4	

BOTTOM CHORD			
PANEL POINT	CHD 5	CHD 6	CHD 7
(300) L0	3′-9 5/8		
(301) L1	7′-0 7/8	7′-0 7/8	
(302) L2	3′-9 5/8	7′-1 11/16	3′-9 5/8
(303) L3	7′-0 7/8	7′-0 7/8	
(304) L4	3′-9 5/8	7′-1 11/16	3′-9 5/8
(305) L5	7′-0 7/8	7′-0 7/8	
(306) L6	3′-9 5/8	7′-1 11/16	3′-9 5/8
(307) L7	7′-0 7/8	7′-0 7/8	
(308) L8	3′-9 5/8		

BLOCKING NOTES:
1. CENTER PUNCH MEMBERS AT 5′-0 OFFSET FROM WORKPOINT.
2. SHOP TO USE CENTER PUNCH TO LOCATE MEMEBERS AT THE PROPER ALIGNMENT, AS SHOWN IN "TYPICAL JOINT DETAIL".
3. NORTH TRUSS (T2) & SOUTH TRUSS (T1) ARE IDENTICAL.
4. ALL DIMENSIONS ARE CAMBERED.
5. FOR SHIPPING MARKS SEE DRAWING E1.
6. FOR GENERAL NOTES SEE DRAWING GN1.

REV.	DATE	REMARKS	DWN	CHK	APVL	SHOP
0						

MATERIAL:	SURFACE PREP. & PAINT:	HOLES:	SHOP BOLTS:

DESCRIPTION: SHOP ASSEMBLY (SPAN 1)

CASCO BAY STEEL STRUCTURES, INC.
1 WALLACE AVE. SOUTH PORTLAND, ME 04106
PHONE (207) 780-6722 FAX. (207) 780-6726
TENSOR 3285

STRUCTURE:	TH-10 OVER OTTER CREEK PONY TRUSS BRIDGE	DRAWN: RB	DATE: 1/6/16
		CHKD: WJL	DATE: 1/11/16
LOCATION:	RUTLAND CITY, VERMONT	JOB NO.	DWG NO.
PROJ NO.	BRF 3000 (19)	598	SA1
CUSTOMER:	KUBRICKY CONSTRUCTION CORP.		REV. △

WJL Thu, Jan 21, 2016 03:48:23 PM J:\work\jobs\3285\GA1 - Rev0

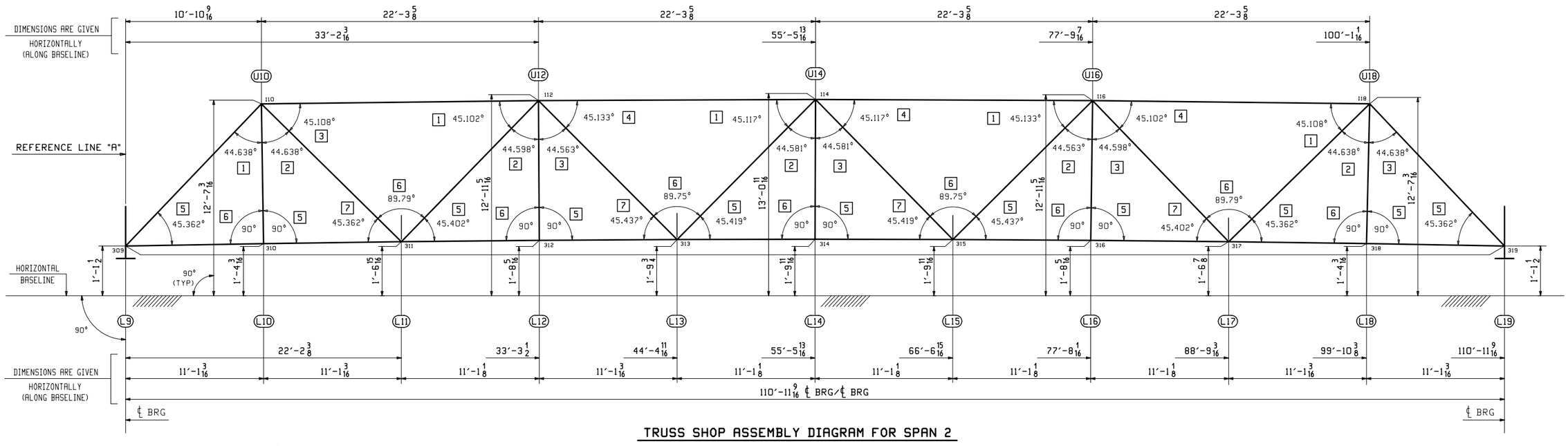

TRUSS SHOP ASSEMBLY DIAGRAM FOR SPAN 2

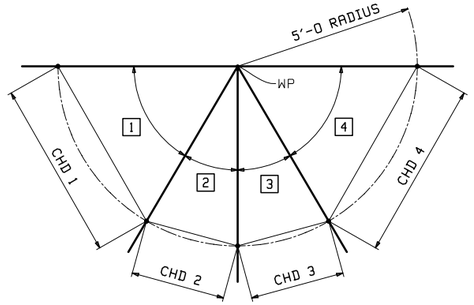

TYPICAL TOP CHORD JOINT DETAIL

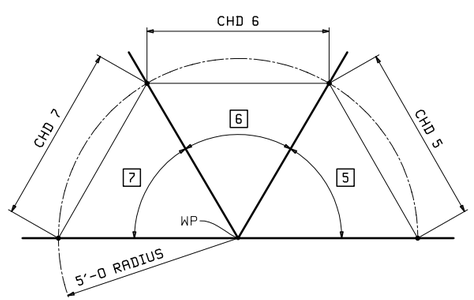

TYPICAL BOTTOM CHORD JOINT DETAIL

TOP CHORD					
	PANEL POINT	CHD 1	CHD 2	CHD 3	CHD 4
(110)	U10	3′-9 9/16	3′-9 9/16	3′-10	
(112)	U12	3′-10	3′-9 9/16	3′-9 1/2	3′-10 1/16
(114)	U14	3′-10 1/16	3′-9 1/2	3′-9 1/2	3′-10 1/16
(116)	U16	3′-10 1/16	3′-9 1/2	3′-9 9/16	3′-10
(118)	U18	3′-10	3′-9 9/16	3′-9 9/16	

BOTTOM CHORD				
	PANEL POINT	CHD 5	CHD 6	CHD 7
(309)	L9	3′-10 1/4		
(310)	L10	7′-0 7/8	7′-0 7/8	
(311)	L11	3′-10 5/16	7′-0 11/16	3′-10 1/4
(312)	L12	7′-0 7/8	7′-0 7/8	
(313)	L13	3′-10 5/16	7′-0 11/16	3′-10 3/8
(314)	L14	7′-0 7/8	7′-0 7/8	
(315)	L15	3′-10 3/8	7′-0 11/16	3′-10 5/16
(316)	L16	7′-0 7/8	7′-0 7/8	
(317)	L17	3′-10 1/4	7′-0 11/16	3′-10 5/16
(318)	L18	7′-0 7/8	7′-0 7/8	
(319)	L19	3′-10 1/4		

BLOCKING NOTES:
1. CENTER PUNCH MEMBERS AT 5′-0 OFFSET FROM WORKPOINT.
2. SHOP TO USE CENTER PUNCH TO LOCATE MEMEBERS AT THE PROPER ALIGNMENT, AS SHOWN IN "TYPICAL JOINT DETAIL".
3. NORTH TRUSS (T2) & SOUTH TRUSS (T1) ARE IDENTICAL.
4. ALL DIMENSIONS ARE CAMBERED.
5. FOR SHIPPING MARKS SEE DRAWING E1.
6. FOR GENERAL NOTES SEE DRAWING GN1.

REV.	DATE	REMARKS	DWN	CHK	APVL	SHOP
0						

MATERIAL:	SURFACE PREP. & PAINT:	HOLES:	SHOP BOLTS:

DESCRIPTION: SHOP ASSEMBLY (SPAN 2)

CASCO BAY STEEL STRUCTURES, INC.
1 WALLACE AVE. PHONE (207) 780-6722
SOUTH PORTLAND, ME 04106 FAX. (207) 780-6726
TENSOR 3285

STRUCTURE: TH-10 OVER OTTER CREEK PONY TRUSS BRIDGE	DRAWN: RB	DATE: 1/6/16	
	CHKD: WJL	DATE: 1/11/16	
LOCATION: RUTLAND CITY, VERMONT	JOB NO.	DWG NO.	
PROJ NO. BRF 3000 (19)	598	SA2	
CUSTOMER: KUBRICKY CONSTRUCTION CORP.		REV. △	

WJL Thu, Jan 21, 2016 03:45:38 PM J:\work\jobs\3285\SA2.1 Rev0

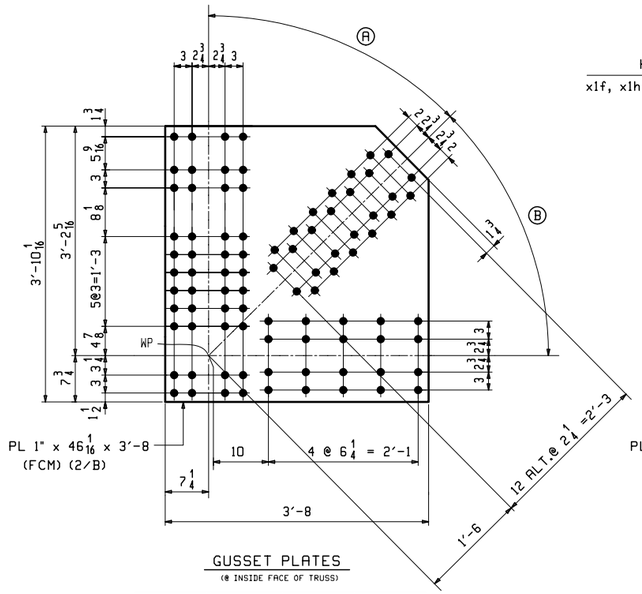

GUSSET PLATES
(@ INSIDE FACE OF TRUSS)

	MARK	REQ'D	Ⓐ	Ⓑ
(@ L0)	**x1a**	2	43.702°	44.688°
(@ L8)	**x1b**	2	45.282°	44.688°
(@ L9)	**x1c**	2	44.800°	45.362°
(@ L19)	**x1d**	2	42.152°	45.362°

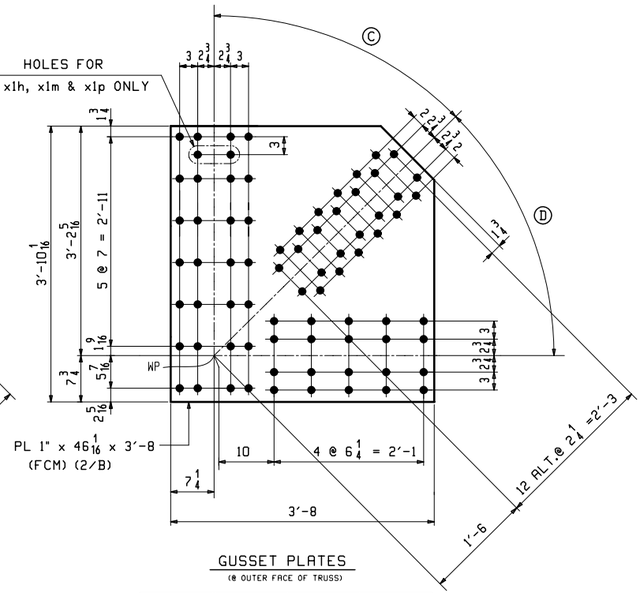

GUSSET PLATES
(@ OUTER FACE OF TRUSS)

	MARK	REQ'D	Ⓒ	Ⓓ
(@ L0 - T2) (NORTH TRUSS)	**x1f**	1	43.702°	44.688°
(@ L0 - T1) (SOUTH TRUSS)	**x1g**	1	43.702°	44.688°
(@ L8 - T2) (NORTH TRUSS)	**x1h**	1	45.282°	44.688°
(@ L8 - T1) **(SOUTH TRUSS)**	**x1k**	1	45.282°	44.688°
(@ L9 - T2) (NORTH TRUSS)	**x1m**	1	44.800°	45.362°
(@ L9 - T1) (SOUTH TRUSS)	**x1n**	1	44.800°	45.362°
(@ L19 - T2) (NORTH TRUSS)	**x1p**	1	42.152°	45.362°
(@ L19 - T1) (SOUTH TRUSS)	**x1s**	1	42.152°	45.362°

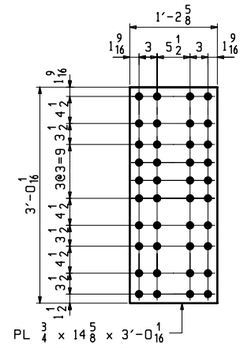

18 ~ GUSSET PLATES ~ x1t
(INSIDE FACE @ L1, L3, L5, L7, L10, L12, L14, L16 & L18).

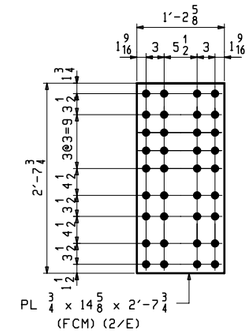

18 ~ GUSSET PLATES ~ x1v
(OUTER FACE @ L1, L3, L5, L7, L10, L12, L14, L16 & L18).

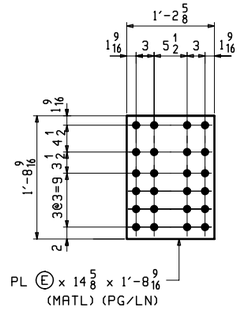

FILL PLATES
(INSIDE FACE GUSSET PLATE)

	MARK	REQ'D	Ⓔ	MATL	PG/LN
(@ L1, L3, L5) (@ L7, L10, L18)	**x1aa**	12	7 GA	A1011-50	2/F
(@ L12, L16)	**x1ab**	4	1/4	M270-50	2/H
(@ L14)	**x1ac**	2	7/16	M270-50	2/K

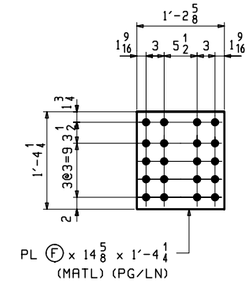

FILL PLATES
(OUTER FACE GUSSET PLATE)

	MARK	REQ'D	Ⓕ	MATL	PG/LN
(@ L1, L3, L5) (@ L7, L10, L18)	**x1ad**	12	7 GA	A1011-50	2/G
(@ L12, L16)	**x1af**	4	1/4	M270-50	2/J
(@ L14)	**x1ag**	2	7/16	M270-50	2/L

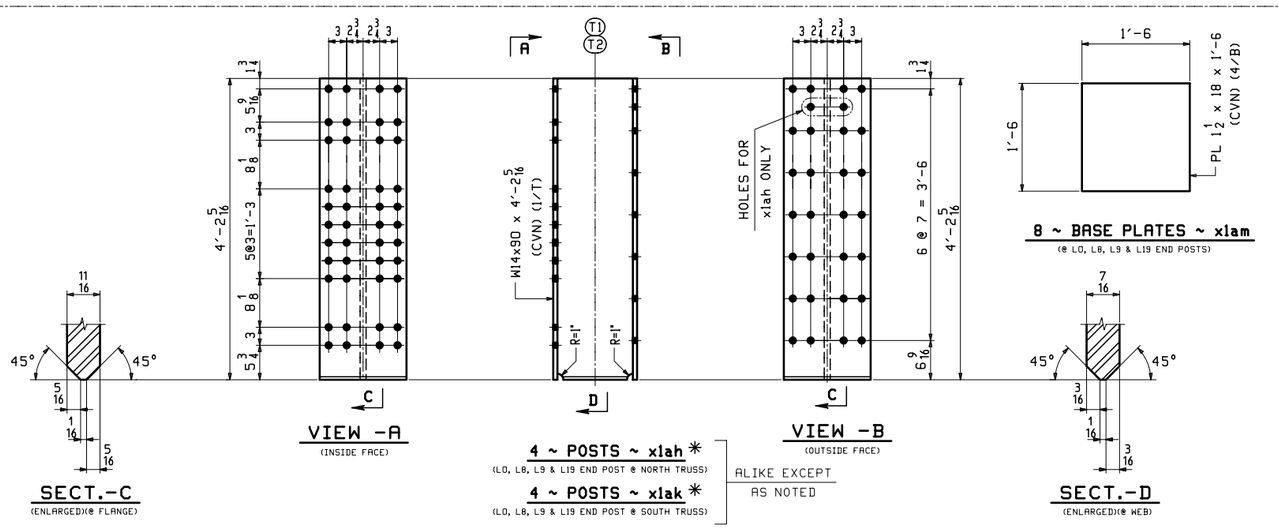

VIEW -A
(INSIDE FACE)

VIEW -B
(OUTSIDE FACE)

SECT.-C
(ENLARGED)(@ FLANGE)

SECT.-D
(ENLARGED)(@ WEB)

8 ~ BASE PLATES ~ x1am
(@ L0, L8, L9 & L19 END POSTS)

4 ~ POSTS ~ x1ah ✳
(L0, L8, L9 & L19 END POST @ NORTH TRUSS)

4 ~ POSTS ~ x1ak ✳
(L0, L8, L9 & L19 END POST @ SOUTH TRUSS)

ALIKE EXCEPT AS NOTED

SHOP NOTE:

✳ POSTS x1ah, x1ak & PLATE x1am SHALL BE GALVANIZED AFTER WELDING POST ASSEMBLIES. (SEE DRAWING 3)

SHOP NOTE "G"

✳ ALL STEEL SHALL BE HOT DIP GALVANIZED IN ACCORDANCE WITH SUBSECTION 506.15 - EXCEPT FOR x1ah, x1ak & x1am. ✳

NOTES:

1. FOR GENERAL NOTES SEE DWG. GN1.
2. FCM - DENOTES FRACTURE CRITICAL MATERIAL.
3. CVN - DENOTES MATERIAL SUBJECT TO CHARPY V-NOTCH TESTING.

REV.	DATE	REMARKS	DWN	CHK	APVL	SHOP
0						

MATERIAL:	SURFACE PREP. & PAINT:	HOLES:	SHOP BOLTS:
M270-50 (UN)	HOT-DIP GALV.	15/16Ø	NONE

DESCRIPTION: TRUSS STANDARD DETAILS

CASCO BAY STEEL STRUCTURES, INC.
1 WALLACE AVE. SOUTH PORTLAND, ME 04106
PHONE (207) 780-6722 FAX. (207) 780-6726
TENSOR 3285

STRUCTURE:	DRAWN:	DATE:
TH-10 OVER OTTER CREEK PONY TRUSS BRIDGE	RB	12/11/15
	CHKD: WJL	DATE: 1/12/16
LOCATION: RUTLAND CITY, VERMONT	JOB NO.	DWG NO.
PROJ NO. BRF 3000 (19)	598	X1
CUSTOMER: KUBRICKY CONSTRUCTION CORP.		REV. △

M:\... Thu, Jan 21, 2016 03:59:20 PM ...\x1.dgn 3285/X1 : Rev0

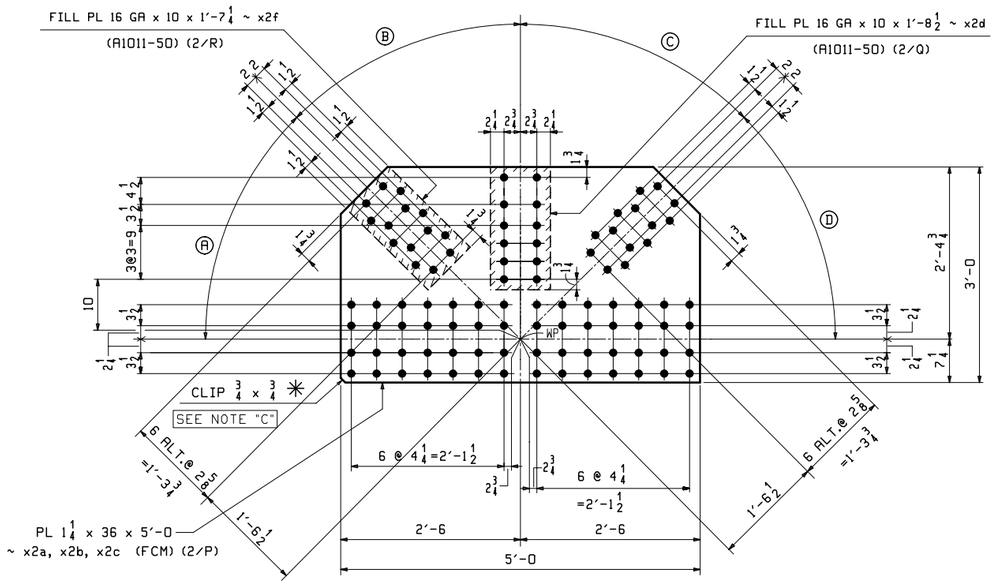

GUSSET PLATES
(@ INSIDE FACE OF TRUSS)

	MARK	REQ'D	Ⓐ	Ⓑ	Ⓒ	Ⓓ
(@ L2)	x2a	2	44.688°	45.573°	45.553°	44.708°
(@ L4)	x2b	2	44.724°	45.575°	45.575°	44.724°
(@ L6)	x2c	2	44.708°	45.553°	45.573°	44.688°

6 ~ FILL PLATES ~ x2d
(@ L2, L4 & L6 RAISED BLOCKING INSIDE GUSSET)

24 ~ FILL PLATES ~ x2f
(@ L2, L4 & L6 DIAGONALS)

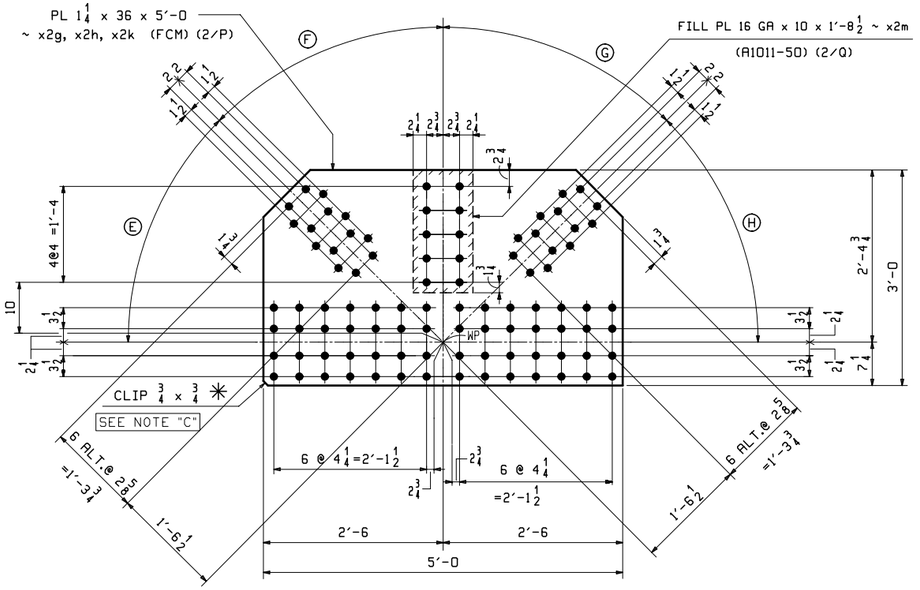

GUSSET PLATES
(@ OUTER FACE OF TRUSS)

	MARK	REQ'D	Ⓔ	Ⓕ	Ⓖ	Ⓗ
(@ L2)	x2g	2	44.688°	45.573°	45.553°	44.708°
(@ L4)	x2h	2	44.724°	45.575°	45.575°	44.724°
(@ L6)	x2k	2	44.708°	45.553°	45.573°	44.688°

6 ~ FILL PLATES ~ x2m
(@ L2, L4 & L6 RAISED BLOCKING OUTER GUSSET)

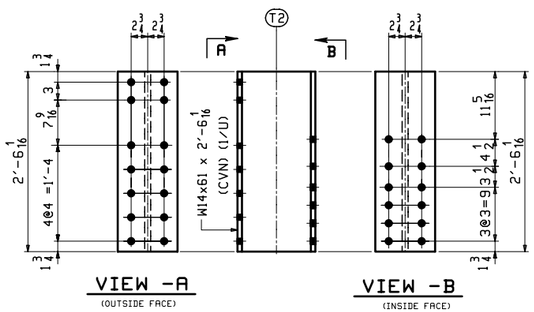

3 ~ POSTS ~ x2n
(L2, L4 & L6 RAISED BLOCKING @ NORTH TRUSS)

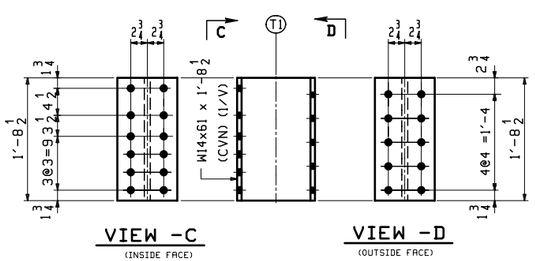

3 ~ POSTS ~ x2p
(L2, L4 & L6 RAISED BLOCKING @ SOUTH TRUSS)

✳ SHOP NOTE "C"

CLIP PLATE CORNER FOR SHOP ORIENTATION @ ASSEMBLY.

SHOP NOTE "G"

ALL STEEL SHALL BE HOT DIP GALVANIZED IN ACCORDANCE WITH SUBSECTION 506.15.

NOTES:
1. FOR GENERAL NOTES SEE DWG. GN1.
2. FCM - DENOTES FRACTURE CRITICAL MATERIAL.
3. CVN - DENOTES MATERIAL SUBJECT TO CHARPY V-NOTCH TESTING.

REV.	DATE	REMARKS	DWN	CHK	APVL	SHOP
0						

MATERIAL:	SURFACE PREP. & PAINT:	HOLES:	SHOP BOLTS:
M270-50 (UN)	HOT-DIP GALV.	15/16Ø	NONE

DESCRIPTION: TRUSS STANDARD DETAILS

CASCO BAY STEEL STRUCTURES, INC.
1 WALLACE AVE. SOUTH PORTLAND, ME 04106
PHONE (207) 780-6722 FAX. (207) 780-6726
TENSOR 3285

STRUCTURE:	TH-10 OVER OTTER CREEK PONY TRUSS BRIDGE	DRAWN: RB	DATE: 12/12/15
		CHKD: WJL	DATE: 1/12/16
LOCATION:	RUTLAND CITY, VERMONT	JOB NO.	DWG NO.
PROJ NO.	BRF 3000 (19)	598	X2
CUSTOMER:	KUBRICKY CONSTRUCTION CORP.		REV. △

Fri, Jan 22, 2016 07:03:53 AM c:\work\jobs\3285\x2.dwg RB

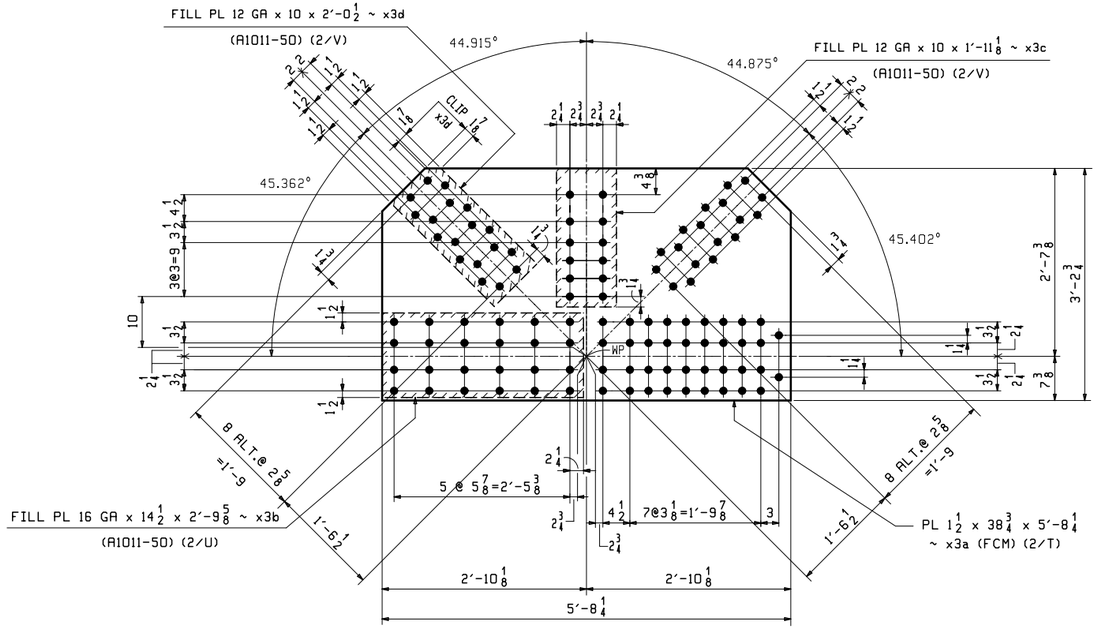

4 ~ GUSSET PLATES ~ x3a
(INSIDE FACE @ L11 & L17)

8 ~ FILL PLATES ~ x3b
(@ L11 & L17 LOWER CHORD)

4 ~ FILL PLATES ~ x3c
(@ L11 & L17 RAISED BLOCKING INSIDE GUSSET)

16 ~ FILL PLATES ~ x3d
(@ L11 & L17 DIAGONALS)

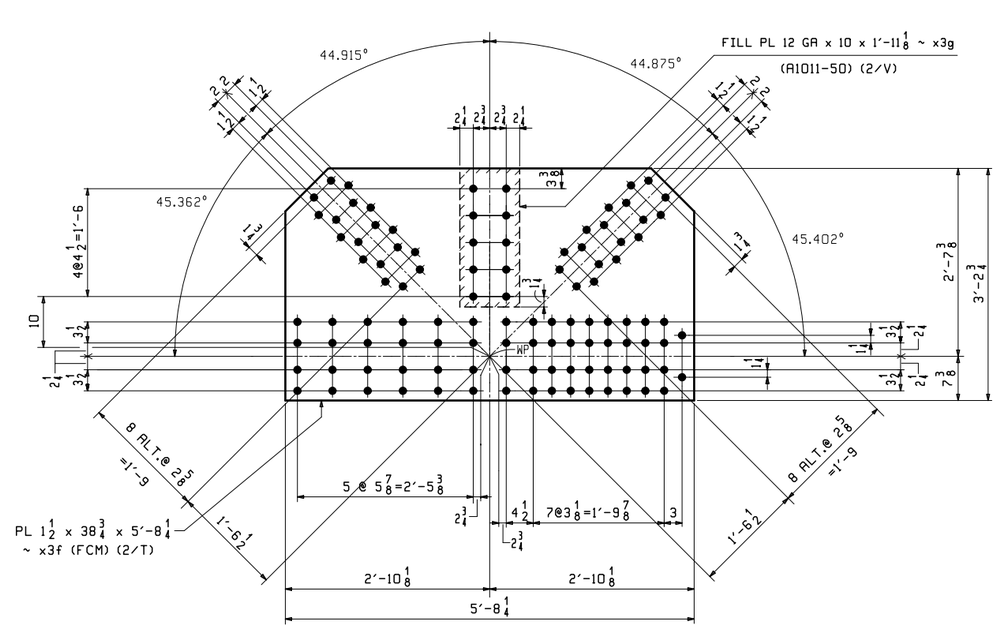

4 ~ GUSSET PLATES ~ x3f
(OUTER FACE @ L11 & L17)

4 ~ FILL PLATES ~ x3g
(@ L11 & L17 RAISED BLOCKING OUTER GUSSET)

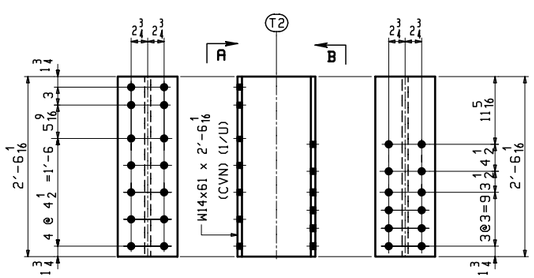

VIEW -A
(OUTSIDE FACE)

VIEW -B
(INSIDE FACE)

4 ~ POSTS ~ x3h
(L11, L13, L15 & L17 RAISED BLOCKING @ NORTH TRUSS)

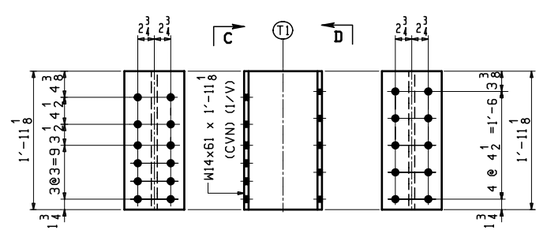

VIEW -C
(INSIDE FACE)

VIEW -D
(OUTSIDE FACE)

4 ~ POSTS ~ x3k
(L11, L13, L15 & L17 RAISED BLOCKING @ SOUTH TRUSS)

SHOP NOTE "G"

ALL STEEL SHALL BE HOT DIP GALVANIZED IN ACCORDANCE WITH SUBSECTION 506.15.

NOTES:
1. FOR GENERAL NOTES SEE DWG. GN1.
2. FCM - DENOTES FRACTURE CRITICAL MATERIAL.
3. CVN - DENOTES MATERIAL SUBJECT TO CHARPY V-NOTCH TESTING.

REV.	DATE	REMARKS	DWN	CHK	APVL	SHOP
0						

MATERIAL:	SURFACE PREP. & PAINT:	HOLES:	SHOP BOLTS:
M270-50 (UN)	HOT-DIP GALV.	15/16 Ø	NONE

DESCRIPTION: TRUSS STANDARD DETAILS

CASCO BAY STEEL STRUCTURES, INC.
1 WALLACE AVE.
SOUTH PORTLAND, ME 04106
PHONE (207) 780-6722
FAX. (207) 780-6726
TENSOR 3285

STRUCTURE: TH-10 OVER OTTER CREEK PONY TRUSS BRIDGE		DRAWN: RB	DATE: 12/12/15
		CHKD: WJL	DATE: 1/12/16
LOCATION: RUTLAND CITY, VERMONT		JOB NO.	DWG NO.
PROJ NO. BRF 3000 (19)		598	X3
CUSTOMER: KUBRICKY CONSTRUCTION CORP.			REV. △

WJL Thu, Jan 21, 2016 03:59:41 PM /users/jobs/3285/X3 : Rev0

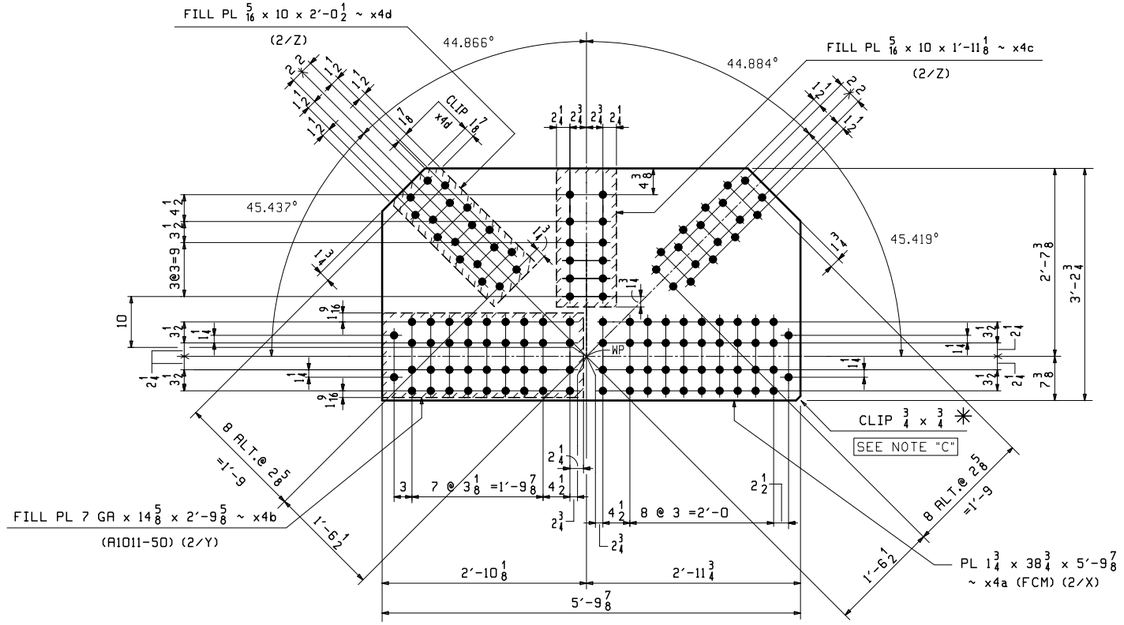

4 ~ GUSSET PLATES ~ x4a
(INSIDE FACE @ L13 & L15)

8 ~ FILL PLATES ~ x4b
(@ L13 & L15 LOWER CHORD)

4 ~ FILL PLATES ~ x4c
(@ L13 & L15 RAISED BLOCKING INSIDE GUSSET)

16 ~ FILL PLATES ~ x4d
(@ L13 & L15 DIAGONALS)

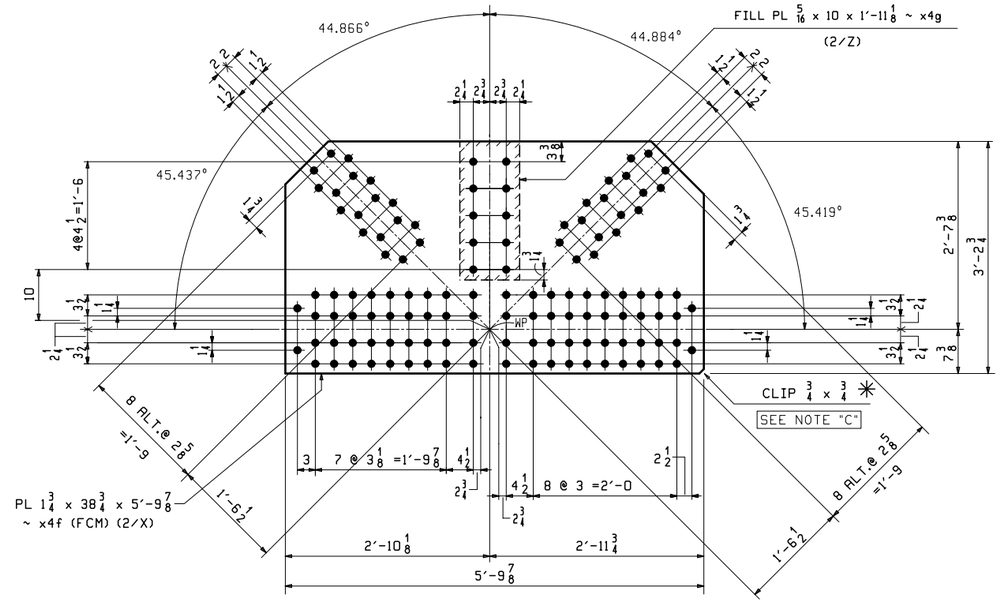

4 ~ GUSSET PLATES ~ x4f
(OUTER FACE @ L13 & L15)

4 ~ FILL PLATES ~ x4g
(@ L13 & L15 RAISED BLOCKING OUTER GUSSET)

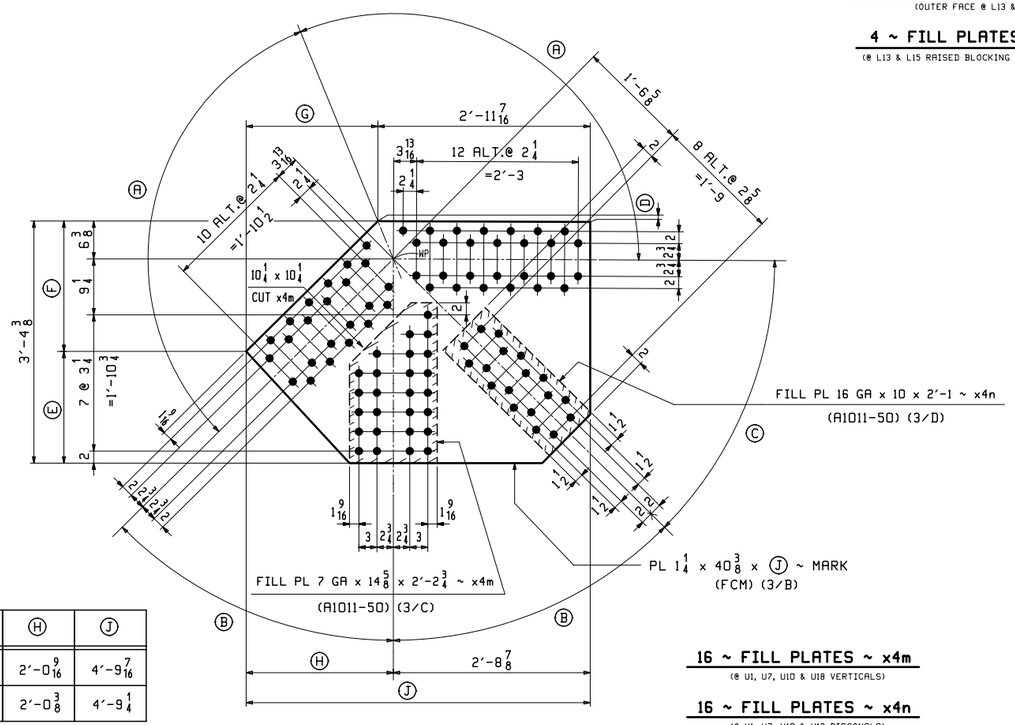

16 ~ FILL PLATES ~ x4m
(@ U1, U7, U10 & U18 VERTICALS)

16 ~ FILL PLATES ~ x4n
(@ U1, U7, U10 & U18 DIAGONALS)

GUSSET PLATES
(@ UPPER CORNER PANEL POINTS)

MARK	REQ'D	Ⓐ	Ⓑ	Ⓒ	Ⓓ	Ⓔ	Ⓕ	Ⓖ	Ⓗ	Ⓙ
(@ U1 & U7) **x4h**	8	112.466°	45.312°	44.444°	1/8	1'-6 5/8	1'-9 3/4	1'-10	2'-0 9/16	4'-9 7/16
(@ U10 & U18) **x4k**	8	112.808°	44.638°	45.108°	3/16	1'-6 3/8	1'-10	1'-9 13/16	2'-0 3/8	4'-9 1/4

SHOP NOTE "C"

CLIP PLATE CORNER FOR SHOP ORIENTATION @ ASSEMBLY.

SHOP NOTE "G"

ALL STEEL SHALL BE HOT DIP GALVANIZED IN ACCORDANCE WITH SUBSECTION 506.15.

NOTES:
1. FOR GENERAL NOTES SEE DWG. GN1.
2. FCM - DENOTES FRACTURE CRITICAL MATERIAL.

REV.	DATE	REMARKS	DWN	CHK	APVL	SHOP
0						

MATERIAL:	SURFACE PREP. & PAINT:	HOLES:	SHOP BOLTS:
M270-50 (UN)	HOT-DIP GALV.	15/16ø	NONE

DESCRIPTION: TRUSS STANDARD DETAILS

CASCO BAY STEEL STRUCTURES, INC.
1 WALLACE AVE. SOUTH PORTLAND, ME 04106
PHONE (207) 780-6722 FAX. (207) 780-6726
TENSOR 3285

STRUCTURE: TH-10 OVER OTTER CREEK PONY TRUSS BRIDGE	DRAWN: RB	DATE: 12/14/15	
	CHKD: WJL	DATE: 1/12/16	
LOCATION: RUTLAND CITY, VERMONT	JOB NO. 598	DWG NO. X4	
PROJ NO. BRF 3000 (19)		REV. △	
CUSTOMER: KUBRICKY CONSTRUCTION CORP.			

RB Fri, Jan 22, 2016 07:39:59 AM J:\users\rbm\2015\x4 - Rev0

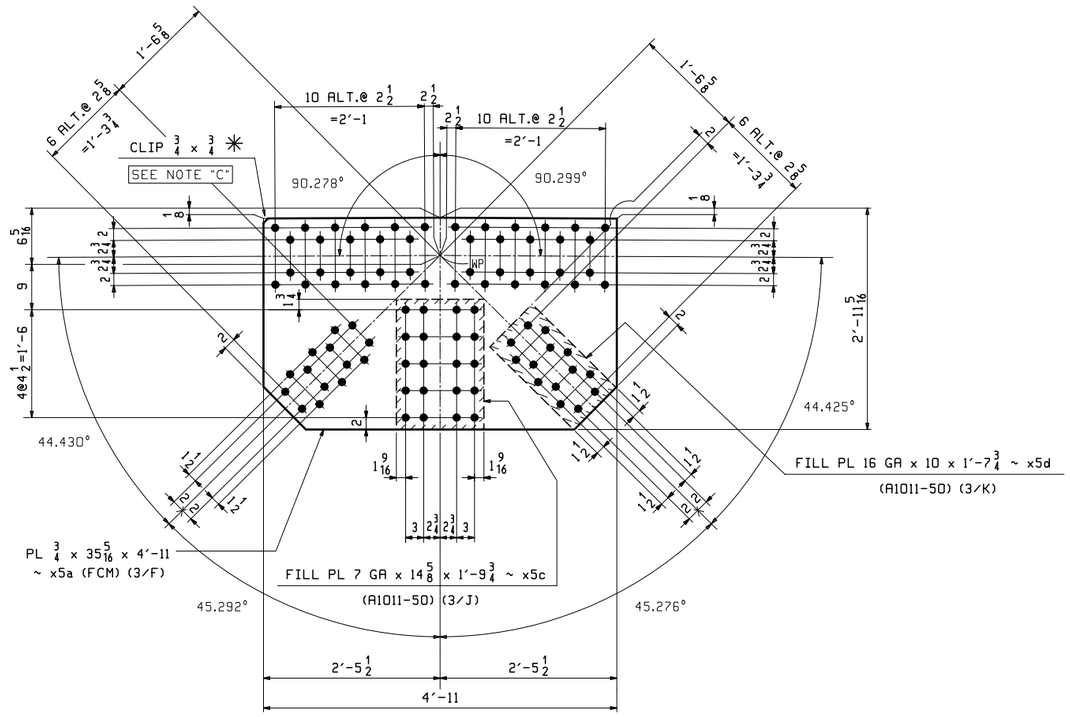

8 ~ GUSSET PLATES ~ x5a
(@ U3 & U5)

8 ~ FILL PLATES ~ x5c
(@ U3 & U5 VERTICALS)

16 ~ FILL PLATES ~ x5d
(@ U3 & U5 DIAGONALS)

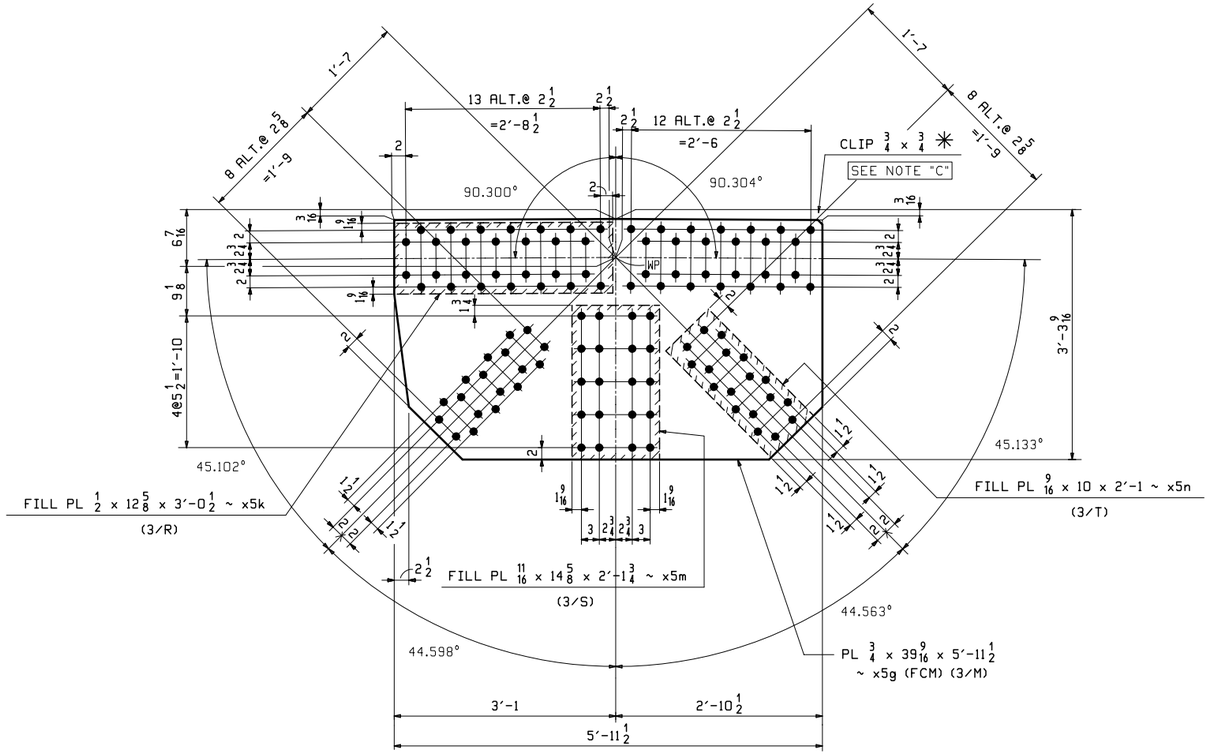

8 ~ GUSSET PLATES ~ x5g
(@ U12 & U16)

8 ~ FILL PLATES ~ x5k
(@ U12 & U16 CHORDS)

12 ~ FILL PLATES ~ x5m
(@ U12, U14 & U16 VERTICALS)

24 ~ FILL PLATES ~ x5n
(@ U12, U14 & U16 DIAGONALS)

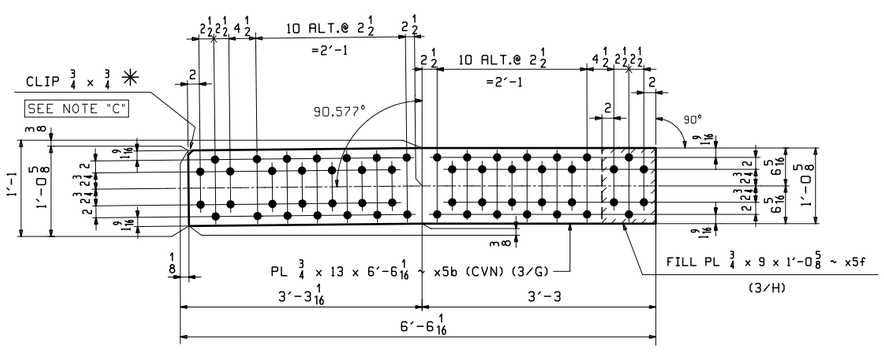

8 ~ CHORD PLATES ~ x5b
(@ U3 & U5)

16 ~ FILL PLATES ~ x5f
(@ U3 & U5 CHORD PLATES)

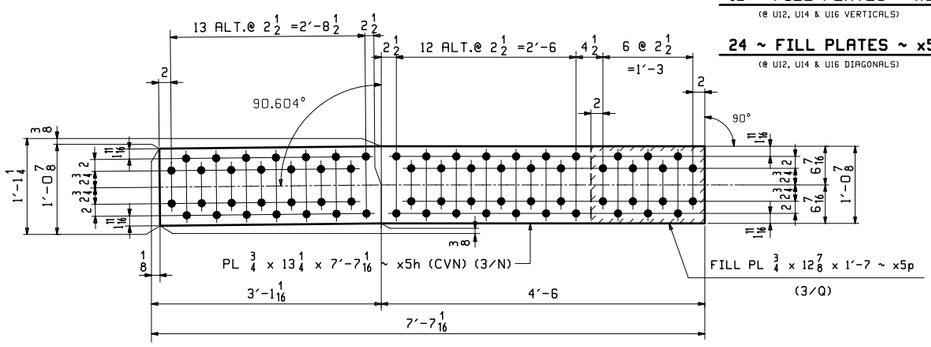

8 ~ CHORD PLATES ~ x5h
(@ U12 & U16)

16 ~ FILL PLATES ~ x5p
(@ U12, U14 & U16 CHORD PLATES)

✳ SHOP NOTE "C"

CLIP PLATE CORNER FOR SHOP ORIENTATION @ ASSEMBLY.

SHOP NOTE "G"

ALL STEEL SHALL BE HOT DIP GALVANIZED IN ACCORDANCE WITH SUBSECTION 506.15.

NOTES:
1. FOR GENERAL NOTES SEE DWG. GN1.
2. FCM - DENOTES FRACTURE CRITICAL MATERIAL.
3. CVN - DENOTES MATERIAL SUBJECT TO CHARPY V-NOTCH TESTING.

REV.	DATE	REMARKS	DWN	CHK	APVL	SHOP
0						

MATERIAL:	SURFACE PREP. & PAINT:	HOLES:	SHOP BOLTS:
M270-50 (UN)	HOT-DIP GALV.	15/16 ø	NONE

DESCRIPTION: TRUSS STANDARD DETAILS

CASCO BAY STEEL STRUCTURES, INC.
1 WALLACE AVE. SOUTH PORTLAND, ME 04106
PHONE (207) 780-6722 FAX. (207) 780-6726
TENSOR 3285

STRUCTURE:	TH-10 OVER OTTER CREEK PONY TRUSS BRIDGE	DRAWN: RB	DATE: 12/14/15
		CHKD: WJL	DATE: 1/12/16
LOCATION:	RUTLAND CITY, VERMONT	JOB NO.	DWG NO.
PROJ NO.	BRF 3000 (19)	598	X5
CUSTOMER:	KUBRICKY CONSTRUCTION CORP.		REV. △

Fri, Jan 22, 2016 07:48:53 AM /users/jobs/3285/X5 : Rev0
RB

TRUSS STANDARDS

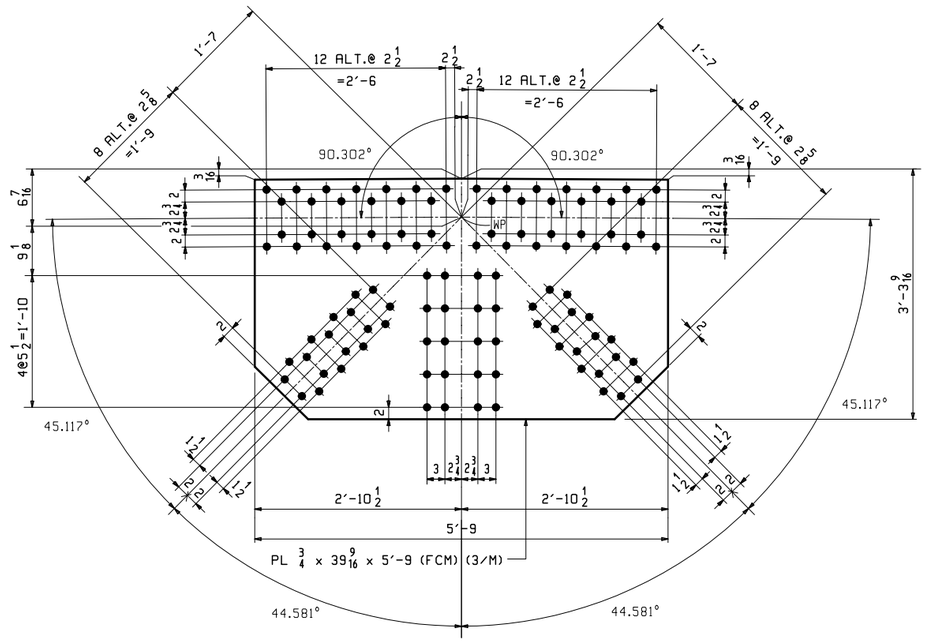

4 ~ GUSSET PLATES ~ x6a
(@ U14)

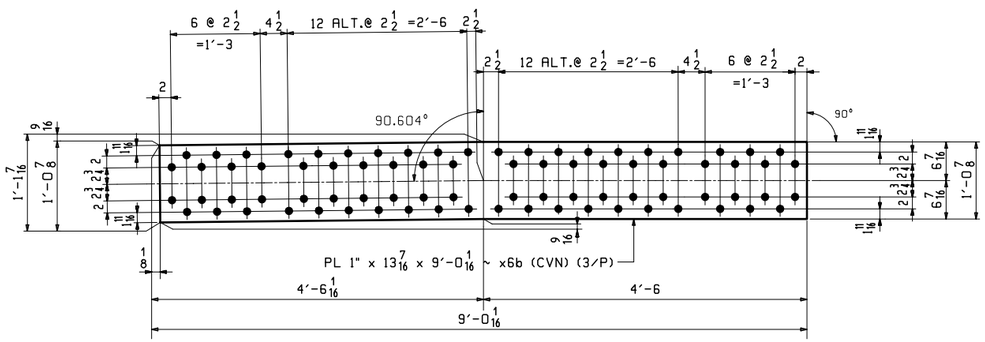

4 ~ CHORD PLATES ~ x6b
(@ U14)

SHOP NOTE "G"

ALL STEEL SHALL BE HOT DIP GALVANIZED IN ACCORDANCE WITH SUBSECTION 506.15.

NOTES:
1. FOR GENERAL NOTES SEE DWG. GN1.
2. FCM - DENOTES FRACTURE CRITICAL MATERIAL.
3. CVN - DENOTES MATERIAL SUBJECT TO CHARPY V-NOTCH TESTING.

FLOORBEAM STANDARDS

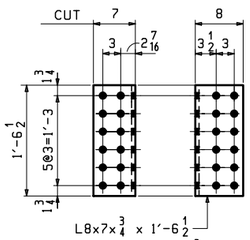

16 ~ ANGLES ~ x6d
(END FLBM CONN @ L0, L8, L9 & L19)

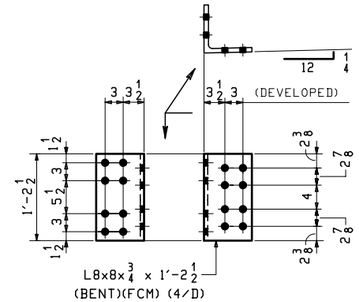

8 ~ ANGLES ~ x6f
(END FLBM TOP & BTM FLG CONNECTION)

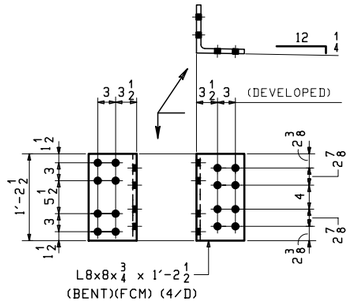

8 ~ ANGLES ~ x6g
(END FLBM TOP & BTM FLG CONNECTION)

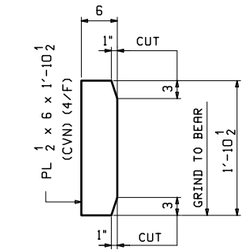

16 ~ STIFFENERS ~ x6h
(JACKING STIFF. @ END FLBM)

SHOP NOTE:

STIFFENERS x6h SHALL BE GALVANIZED WITH FLOORBEAMS AFTER WELDING.
(SEE DRAWINGS 16 & 17)

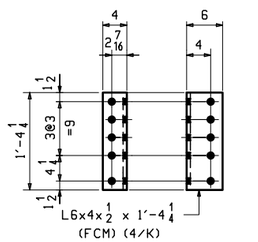

14 ~ ANGLES ~ x6n
(INTERM. FLBM CONN @ L2, L4, L6, L11, L13, L15 & L17)

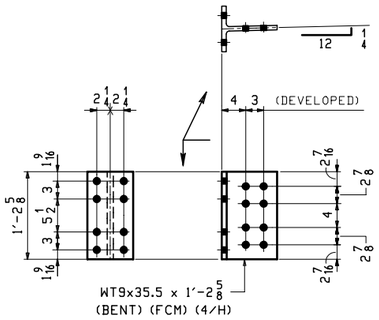

36 ~ WT's ~ x6k
(INTERM. FLBM TOP & BTM FLG CONNECTION @ L1,L3,L5,L7,L10,L12,L14,L16 & L18)

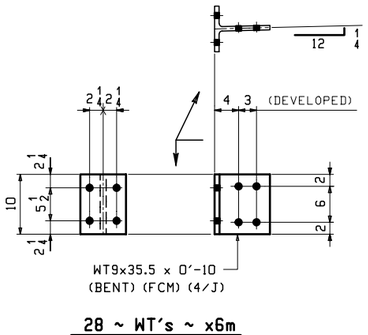

28 ~ WT's ~ x6m
(INTERM. FLBM TOP & BTM FLG CONNECTION @ L2,L4,L6,L11,L13,L15 & L17)

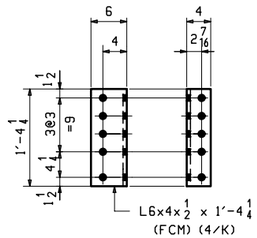

14 ~ ANGLES ~ x6p
(INTERM. FLBM CONN @ L2, L4, L6, L11, L13, L15 & L17)

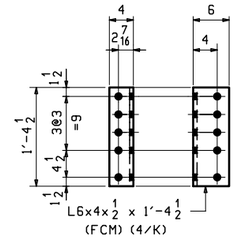

18 ~ ANGLES ~ x6t
(INTERM. FLBM CONN @ L1, L3, L5, L7, L10, L12, L14 & L16)

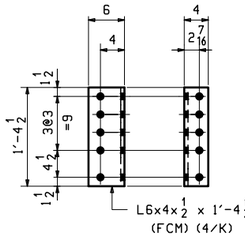

18 ~ ANGLES ~ x6v
(INTERM. FLBM CONN @ L1, L3, L5, L7, L10, L12, L14 & L16)

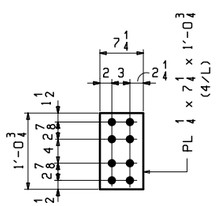

18 ~ FILL PLATES ~ x6s
(INTERM. FLBM BTM FLG CONNECTION @ L1,L3,L5,L7,L10,L12,L14,L16 & L18)

REV.	DATE	REMARKS	DWN	CHK	APVL	SHOP
0						

MATERIAL:	SURFACE PREP. & PAINT:	HOLES:	SHOP BOLTS:
M270-50	HOT-DIP GALV.	15/16Ø	NONE

DESCRIPTION: TRUSS & FLOORBEAM STANDARD DETAILS

CASCO BAY STEEL STRUCTURES, INC.
1 WALLACE AVE. PHONE (207) 780-6722
SOUTH PORTLAND, ME 04106 FAX. (207) 780-6726
TENSOR 3285

STRUCTURE: TH-10 OVER OTTER CREEK PONY TRUSS BRIDGE	DRAWN: RB	DATE: 12/15/15
	CHKD: WJL	DATE: 1/13/16
LOCATION: RUTLAND CITY, VERMONT	JOB NO.	DWG NO.
PROJ NO. BRF 3000 (19)	598	X6
CUSTOMER: KUBRICKY CONSTRUCTION CORP.		REV. △

RB Fri, Jan 22, 2016 07:48:44 AM J:\work\jobs\3285\X6.1 Rev0

LATERAL BRACING STANDARDS

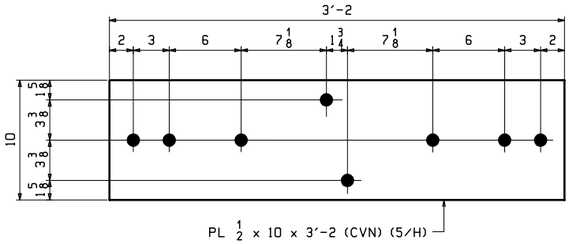

2 ~ GUSSET PLATES ~ x7a

(CENTER GUSSET PLATE @ SPAN 1)

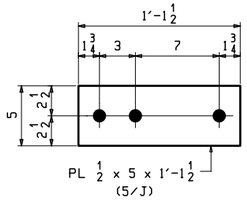

8 ~ FILL PLATES ~ x7c

(@ ENDS OF DIAGONAL IN SPAN 1)

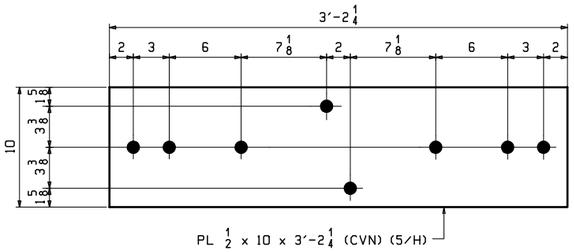

2 ~ GUSSET PLATES ~ x7b

(CENTER GUSSET PLATE @ SPAN 2)

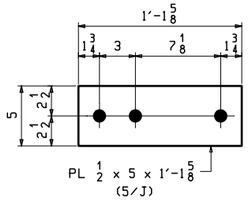

8 ~ FILL PLATES ~ x7d

(@ ENDS OF DIAGONAL IN SPAN 2)

BRACKET STANDARDS

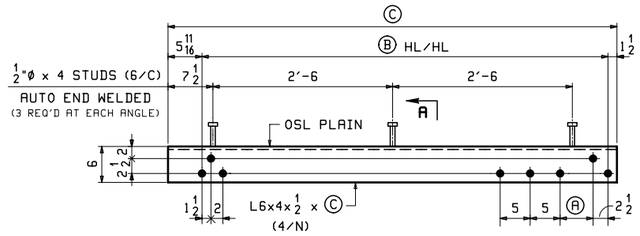

ANGLES

(SIDEWALK SUPPORT TOP STRUT)

MARK	REQ'D	Ⓐ	Ⓑ	Ⓒ	
x7f	4	5 1/2	5'-7 13/16	6'-3	(@ L0, L8, L9 & L19)
x7h	9	6 11/16	5'-9	6'-4 3/16	(@ L1,L3,L5,L7,L10,L12,L14,L16 & L18)
x7m	7	6 9/16	5'-8 7/8	6'-4 1/16	(@ L2, L4, L6, L11, L13, L15 & L17)

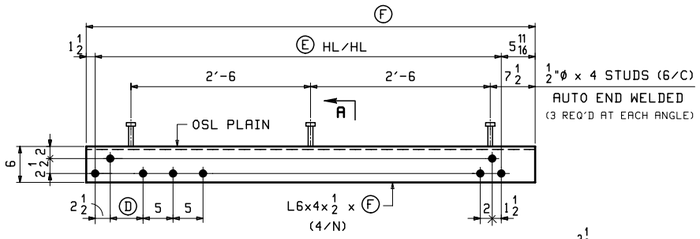

ANGLES

(SIDEWALK SUPPORT TOP STRUT)

MARK	REQ'D	Ⓓ	Ⓔ	Ⓕ	
x7g	4	5 1/2	5'-7 13/16	6'-3	(@ L0, L8, L9 & L19)
x7k	9	6 11/16	5'-9	6'-4 3/16	(@ L1,L3,L5,L7,L10,L12,L14,L16 & L18)
x7n	7	6 9/16	5'-8 7/8	6'-4 1/16	(@ L2, L4, L6, L11, L13, L15 & L17)

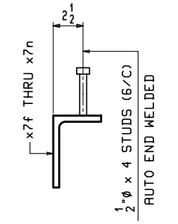

SECTION -A

(ENLARGED)

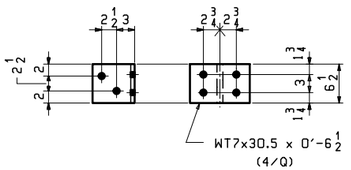

20 ~ WT's ~ x7p

(SIDEWALK SUPPORT BRACKET TOP CONNECTION)

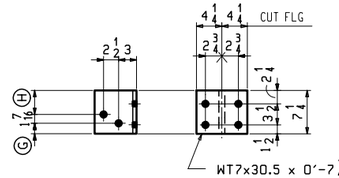

WT's

(SIDEWALK SUPPORT BTM CONNECTION)

MARK	REQ'D	Ⓖ	Ⓗ	
x7t	6	1 7/8	3 15/16	(@ L1, L3, L5, L7, L10 & L18)
x7v	2	1 15/16	3 7/8	(@ L12 & L16)
x7w	1	2	3 13/16	(@ L14)

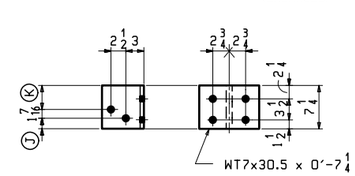

WT's

(SIDEWALK SUPPORT BTM CONNECTION)

MARK	REQ'D	Ⓙ	Ⓚ	
x7aa	3	2	3 13/16	(@ L2, L4, & L6)
x7ab	2	2 1/8	3 11/16	(@ L11 & L17)
x7ac	2	2 3/8	3 7/16	(@ L13 & L15)

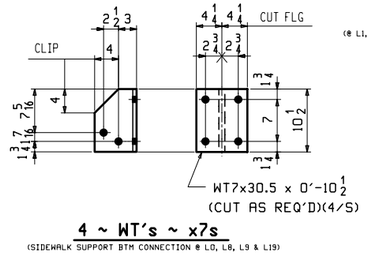

4 ~ WT's ~ x7s

(SIDEWALK SUPPORT BTM CONNECTION @ L0, L8, L9 & L19)

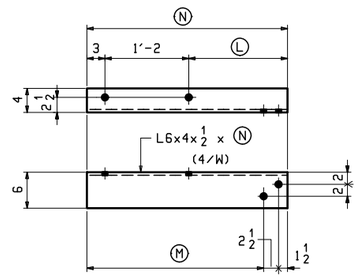

ANGLES

(SEWER LINE SUPPORT)

MARK	REQ'D	Ⓛ	Ⓜ	Ⓝ	
x7ad	5	1'-4 1/2	2'-5 1/2	2'-9 1/2	(@ L0, L8, L9, L14 & L19)
x7af	6	1'-4 3/4	2'-5 3/4	2'-9 3/4	(@ L1, L3, L5, L7, L10 & L18)
x7ag	2	1'-4 11/16	2'-5 11/16	2'-9 11/16	(@ L12 & L16)
x7ah	3	1'-4 1/4	2'-5 1/4	2'-9 1/4	(@ L2, L4 & L6)
x7ak	2	1'-3 15/16	2'-4 15/16	2'-8 15/16	(@ L11 & L17)
x7am	2	1'-3 1/2	2'-4 1/2	2'-8 1/2	(@ L13 & L15)

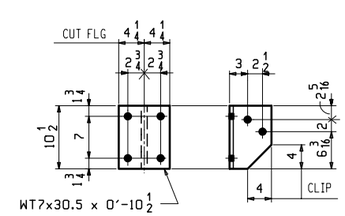

4 ~ WT's ~ x7an

(SEWER LINE SUPPORT @ L0, L8, L9 & L19)

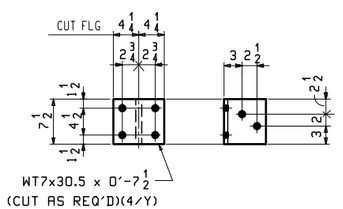

9 ~ WT's ~ x7ap

(SEWER LINE SUPPORT @ L1,L3,L5,L7,L10,L12,L14,L16 & L18)

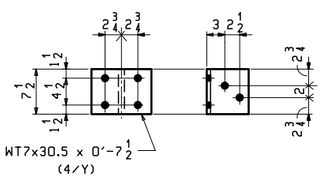

7 ~ WT's ~ x7as

(SEWER LINE SUPPORT @ L2,L4,L6,L11,L13,L15 & L17)

SHOP NOTE "G"

ALL STEEL SHALL BE HOT DIP GALVANIZED IN ACCORDANCE WITH SUBSECTION 506.15.

NOTES:

1. FOR GENERAL NOTES SEE DWG. GN1.
2. CVN - DENOTES MATERIAL SUBJECT TO CHARPY V-NOTCH TESTING.

REV.	DATE	REMARKS	DWN	CHK	APVL	SHOP
0						

MATERIAL:	SURFACE PREP. & PAINT:	HOLES:	SHOP BOLTS:
M270-50	HOT-DIP GALV.	15/16Ø	NONE

DESCRIPTION: LATERAL BRACING & BRACKET STANDARD DETAILS

CASCO BAY STEEL STRUCTURES, INC.
1 WALLACE AVE. SOUTH PORTLAND, ME 04106
PHONE (207) 780-6722 FAX. (207) 780-6726
TENSOR 3285

STRUCTURE: TH-10 OVER OTTER CREEK PONY TRUSS BRIDGE	DRAWN: RB	DATE: 12/22/15
	CHKD: WJL	DATE: 1/13/16
LOCATION: RUTLAND CITY, VERMONT	JOB NO. 598	DWG NO. X7
PROJ NO. BRF 3000 (19)		REV. △
CUSTOMER: KUBRICKY CONSTRUCTION CORP.		

WJL Thu, Jan 21, 2016 04:07:29 pm J:\work\jobs\3285\x7.dgn Rev0

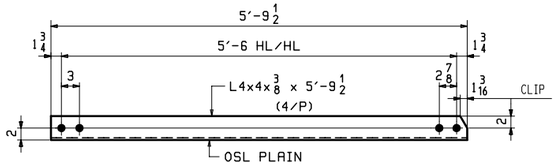

4 ~ ANGLES ~ x8a
(SIDEWALK SUPPORT DIAGONAL @ L10, L18, L9 & L19)

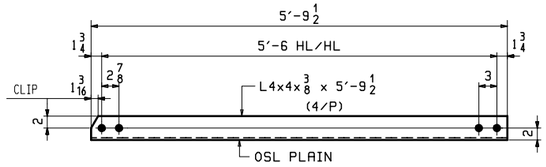

4 ~ ANGLES ~ x8b
(SIDEWALK SUPPORT DIAGONAL @ L10, L18, L9 & L19)

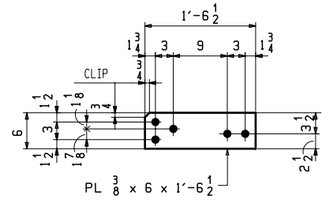

20 ~ PLATES ~ x8w
(CONNECTION FOR BRACKET DIAGONALS)

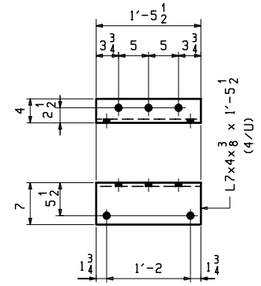

20 ~ ANGLES ~ x8y
(SIDEWALK BRACKET WATER LINE CONNECTION)

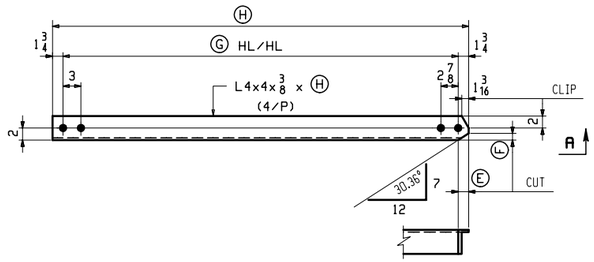

ANGLES
(SIDEWALK SUPPORT DIAGONALS)

VIEW -A

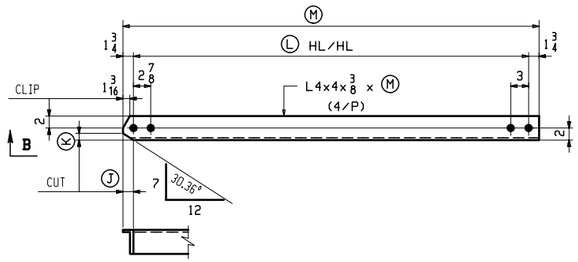

VIEW -B

ANGLES
(SIDEWALK SUPPORT DIAGONALS)

	MARK	REQ'D	E	F	G	H
(@ L1, L3, L5, L7, L10 & L18)	x8c	6	$1\frac{7}{8}$	$1\frac{1}{8}$	$5'-6\frac{5}{16}$	$5'-9\frac{13}{16}$
(@ L12 & L16)	x8f	2	$1\frac{13}{16}$	$1\frac{1}{16}$	$5'-6\frac{1}{4}$	$5'-9\frac{3}{4}$
(@ L14)	x8h	1	$1\frac{3}{4}$	$\frac{15}{16}$	5′-6	$5'-9\frac{1}{2}$
(@ L2, L4 & L6)	x8m	3	$1\frac{5}{16}$	$\frac{3}{4}$	$5'-5\frac{3}{4}$	$5'-9\frac{1}{4}$
(@ L11 & L17)	x8p	2	$\frac{15}{16}$	$\frac{9}{16}$	$5'-5\frac{5}{16}$	$5'-8\frac{13}{16}$
(@ L13 & L15)	x8t	2	$\frac{7}{16}$	$\frac{1}{4}$	$5'-4\frac{13}{16}$	$5'-8\frac{5}{16}$

ANGLES
(SIDEWALK SUPPORT DIAGONALS)

	MARK	REQ'D	J	K	L	M
(@ L1, L3, L5, L7, L10 & L18)	x8d	6	$1\frac{7}{8}$	$1\frac{1}{8}$	$5'-6\frac{5}{16}$	$5'-9\frac{13}{16}$
(@ L12 & L16)	x8g	2	$1\frac{13}{16}$	$1\frac{1}{16}$	$5'-6\frac{1}{4}$	$5'-9\frac{3}{4}$
(@ L14)	x8k	1	$1\frac{3}{4}$	$\frac{15}{16}$	5′-6	$5'-9\frac{1}{2}$
(@ L2, L4 & L6)	x8n	3	$1\frac{5}{16}$	$\frac{3}{4}$	$5'-5\frac{3}{4}$	$5'-9\frac{1}{4}$
(@ L11 & L17)	x8s	2	$\frac{15}{16}$	$\frac{9}{16}$	$5'-5\frac{5}{16}$	$5'-8\frac{13}{16}$
(@ L13 & L15)	x8v	2	$\frac{7}{16}$	$\frac{1}{4}$	$5'-4\frac{13}{16}$	$5'-8\frac{5}{16}$

SHOP NOTE "G"

ALL STEEL SHALL BE HOT DIP GALVANIZED IN ACCORDANCE WITH SUBSECTION 506.15.

NOTES:

1. FOR GENERAL NOTES SEE DWG. GN1.

REV.	DATE	REMARKS	DWN	CHK	APVL	SHOP
0						

MATERIAL:	SURFACE PREP. & PAINT:	HOLES:	SHOP BOLTS:
M270-50	HOT-DIP GALV.	$\frac{15}{16}\varnothing$	NONE

DESCRIPTION: BRACKET STANDARD DETAILS

CASCO BAY STEEL STRUCTURES, INC.
1 WALLACE AVE. SOUTH PORTLAND, ME 04106
PHONE (207) 780-6722 FAX. (207) 780-6726
TENSOR 3285

STRUCTURE: TH-10 OVER OTTER CREEK PONY TRUSS BRIDGE	DRAWN: RB	DATE: 1/4/16
	CHKD: WJL	DATE: 1/13/16
LOCATION: RUTLAND CITY, VERMONT	JOB NO.	DWG NO.
PROJ NO. BRF 3000 (19)	598	X8
CUSTOMER: KUBRICKY CONSTRUCTION CORP.		REV. △

WJL Thu, Jan 21, 2016 04:07:58 PM J:\work\jobs\3285\X8.1 Rev0

SHOP NOTE:

DO NOT SHIP FROM THIS DRAWING

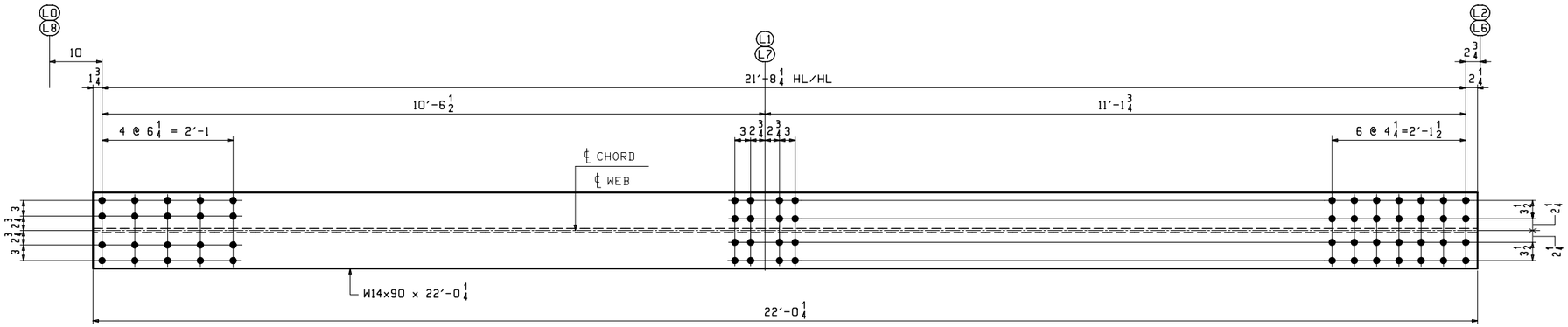

ONE ~ BOTTOM CHORD ~ 1BC1N (L0 - L2 NORTH)

ONE ~ BOTTOM CHORD ~ 1BC1S (L0 - L2 SOUTH)

ALIKE EXCEPT FOR MARK

ONE ~ BOTTOM CHORD ~ 1BC4N (L8 - L6 NORTH)

ONE ~ BOTTOM CHORD ~ 1BC4S (L8 - L6 SOUTH)

SHOP NOTE "G"

ALL STEEL SHALL BE HOT DIP GALVANIZED IN ACCORDANCE WITH SUBSECTION 506.15.

SHOP NOTE "H"

HOLES IN BOTH FLANGES OF EACH BOTTOM CHORD BEAM ARE ALIKE.

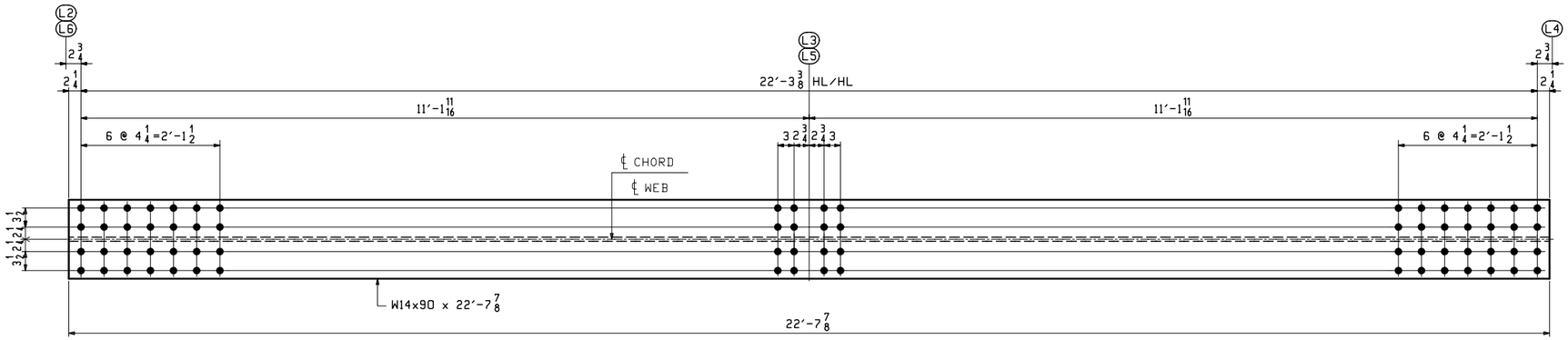

ONE ~ BOTTOM CHORD ~ 1BC2N (L2 - L4 NORTH)

ONE ~ BOTTOM CHORD ~ 1BC2S (L2 - L4 SOUTH)

ALIKE EXCEPT FOR MARK

ONE ~ BOTTOM CHORD ~ 1BC3N (L6 - L4 NORTH)

ONE ~ BOTTOM CHORD ~ 1BC3S (L6 - L4 SOUTH)

NOTES:
1. FOR GENERAL NOTES SEE DWG. GN1.
2. FCM - DENOTES FRACTURE CRITICAL MATERIAL.

ABM INFO		SHIP	BILL OF MATERIAL					JOB NO.	DRAWING NO.	REV.
								598	1	
PAGE	LINE	MARK	QTY	MARK	MATERIAL	LENGTH FT	LENGTH INCHES	REMARKS	WT	PROCUREMENT NOTES
					BOTTOM CHORDS					
1	B	1BC1N	1		W 14x90	22	0 1/4	GALV. ALIKE EXCEPT FOR MARK M270-50F2 (FCM)	1982	
1	B	1BC1S	1		W 14x90	22	0 1/4	GALV. M270-50F2 (FCM)	1982	
1	B	1BC4N	1		W 14x90	22	0 1/4	GALV. M270-50F2 (FCM)	1982	
1	B	1BC4S	1		W 14x90	22	0 1/4	GALV. M270-50F2 (FCM)	1982	
1	B	1BC2N	1		W 14x90	22	7 7/8	GALV. ALIKE EXCEPT FOR MARK M270-50F2 (FCM)	2039	
1	B	1BC2S	1		W 14x90	22	7 7/8	GALV. M270-50F2 (FCM)	2039	
1	B	1BC3N	1		W 14x90	22	7 7/8	GALV. M270-50F2 (FCM)	2039	
1	B	1BC3S	1		W 14x90	22	7 7/8	GALV. M270-50F2 (FCM)	2039	

REV.	DATE	REMARKS	DWN	CHK	APVL	SHOP
0						

MATERIAL:	SURFACE PREP. & PAINT:	HOLES:	SHOP BOLTS:
M270-50	HOT-DIP GALV.	15/16ø	NONE

DESCRIPTION: BOTTOM CHORDS

CASCO BAY STEEL STRUCTURES, INC.
1 WALLACE AVE. SOUTH PORTLAND, ME 04106
PHONE (207) 780-6722 FAX. (207) 780-6726
TENSOR 3285

STRUCTURE: TH-10 OVER OTTER CREEK PONY TRUSS BRIDGE	DRAWN: RB	DATE: 12/15/15
	CHKD: WJL	DATE: 1/13/16
LOCATION: RUTLAND CITY, VERMONT	JOB NO.	DWG NO.
PROJ NO. BRF 3000 (19)	598	1
CUSTOMER: KUBRICKY CONSTRUCTION CORP.		REV. △

WJL Thu, Jan 21, 2016 04:08:22 PM c:\work\jobs\3285\1 : Rev0

SHOP NOTE:

DO NOT SHIP FROM THIS DRAWING

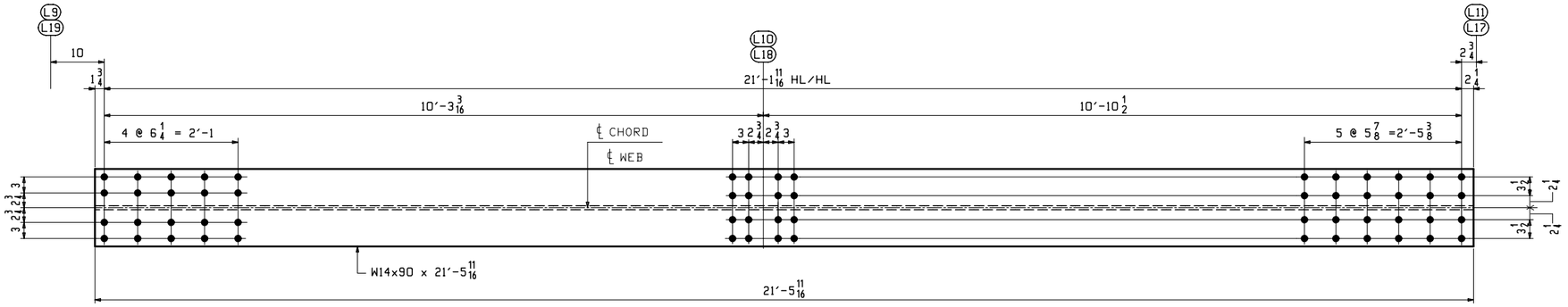

ONE ~ BOTTOM CHORD ~ 2BC5N (L9 - L11 NORTH)
ONE ~ BOTTOM CHORD ~ 2BC5S (L9 - L11 SOUTH)

ALIKE EXCEPT FOR MARK

ONE ~ BOTTOM CHORD ~ 2BC9N (L19 - L17 NORTH)
ONE ~ BOTTOM CHORD ~ 2BC9S (L19 - L17 SOUTH)

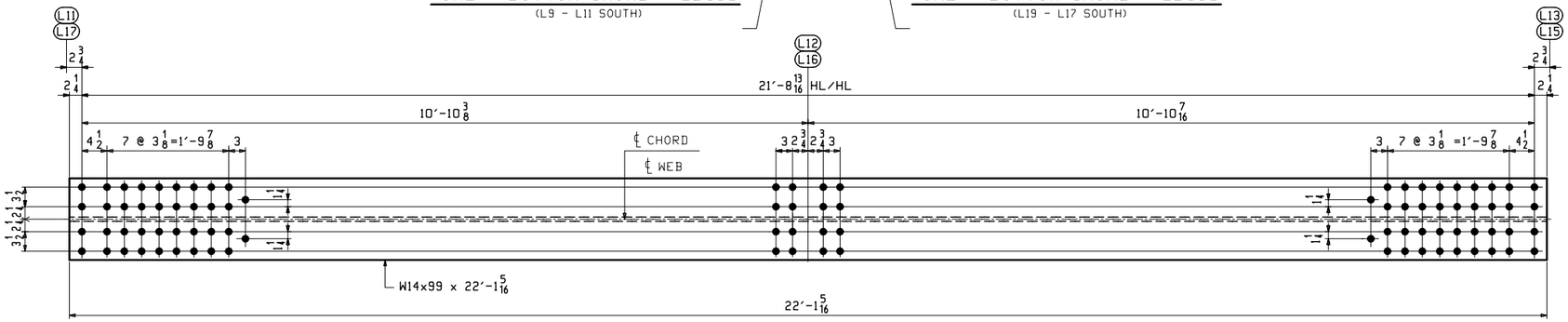

ONE ~ BOTTOM CHORD ~ 2BC6N (L11 - L13 NORTH)
ONE ~ BOTTOM CHORD ~ 2BC6S (L11 - L13 SOUTH)

ALIKE EXCEPT FOR MARK

ONE ~ BOTTOM CHORD ~ 2BC8N (L17 - L15 NORTH)
ONE ~ BOTTOM CHORD ~ 2BC8S (L17 - L15 SOUTH)

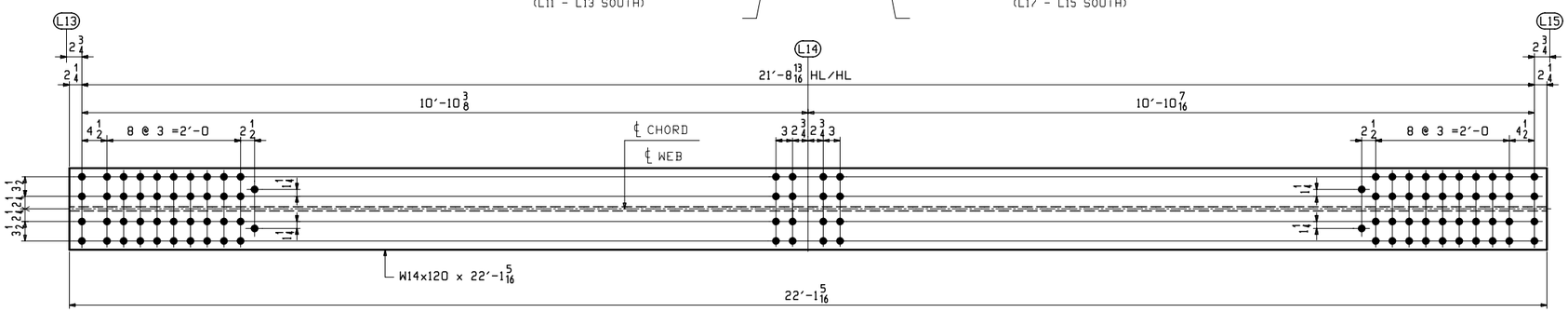

ONE ~ BOTTOM CHORD ~ 2BC7N (L13 - L15 NORTH)
ONE ~ BOTTOM CHORD ~ 2BC7S (L13 - L15 SOUTH)

ALIKE EXCEPT FOR MARK

NOTES:
1. FOR GENERAL NOTES SEE DWG. GN1.
2. FCM - DENOTES FRACTURE CRITICAL MATERIAL.

SHOP NOTE "G"

ALL STEEL SHALL BE HOT DIP GALVANIZED IN ACCORDANCE WITH SUBSECTION 506.15.

SHOP NOTE "H"

HOLES IN BOTH FLANGES OF EACH BOTTOM CHORD BEAM ARE ALIKE.

BILL OF MATERIAL

JOB NO. 598 | DRAWING NO. 2 | REV.

ABM INFO PAGE	ABM INFO LINE	SHIP MARK	QTY	MARK	MATERIAL	LENGTH FT	LENGTH INCHES	REMARKS	WT	PROCUREMENT NOTES
					BOTTOM CHORDS					
1	C	2BC5N	1		W 14x90	21	5 11/16	GALV, ALIKE EXCEPT FOR MARK M270-50F2 (FCM)	1933	
1	C	2BC5S	1		W 14x90	21	5 11/16	GALV. M270-50F2 (FCM)	1933	
1	C	2BC9N	1		W 14x90	21	5 11/16	GALV. M270-50F2 (FCM)	1933	
1	C	2BC9S	1		W 14x90	21	5 11/16	GALV. M270-50F2 (FCM)	1933	
1	D	2BC6N	1		W 14x99	22	1 5/16	GALV, ALIKE EXCEPT FOR MARK M270-50F2 (FCM)	2189	
1	D	2BC6S	1		W 14x99	22	1 5/16	GALV. M270-50F2 (FCM)	2189	
1	D	2BC8N	1		W 14x99	22	1 5/16	GALV. M270-50F2 (FCM)	2189	
1	D	2BC8S	1		W 14x99	22	1 5/16	GALV. M270-50F2 (FCM)	2189	
1	E	2BC7N	1		W 14x120	22	1 5/16	GALV, ALIKE EXCEPT FOR MARK M270-50F2 (FCM)	2653	
1	E	2BC7S	1		W 14x120	22	1 5/16	GALV. M270-50F2 (FCM)	2653	

REV.	DATE	REMARKS	DWN	CHK	APVL	SHOP
0						

MATERIAL:	SURFACE PREP. & PAINT:	HOLES:	SHOP BOLTS:
M270-50	HOT-DIP GALV.	15/16ø	NONE

DESCRIPTION: BOTTOM CHORDS

CASCO BAY STEEL STRUCTURES, INC.
1 WALLACE AVE. SOUTH PORTLAND, ME 04106
PHONE (207) 780-6722 FAX. (207) 780-6726
TENSOR 3285

STRUCTURE: TH-10 OVER OTTER CREEK PONY TRUSS BRIDGE	DRAWN: RB	DATE: 12/15/15	
	CHKD: WJL	DATE: 1/13/16	
LOCATION: RUTLAND CITY, VERMONT	JOB NO. 598	DWG NO. 2	
PROJ NO. BRF 3000 (19)			
CUSTOMER: KUBRICKY CONSTRUCTION CORP.		REV. △	

WJL Thu, Jan 21, 2016 04:08:52 PM J:\work\jobs\3285-2 - Rev0

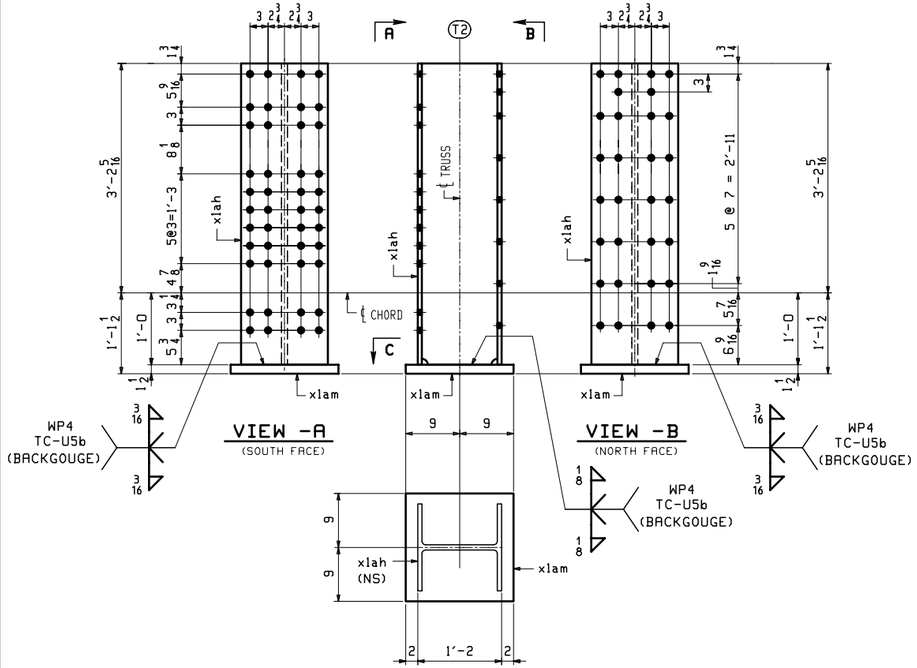

SECTION -C

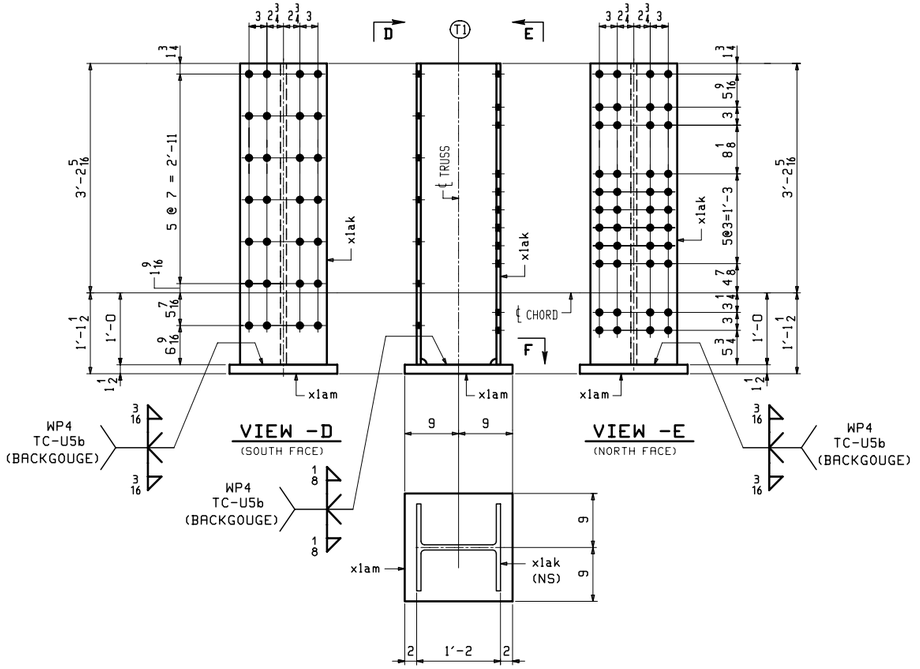

SECTION -F

ONE ~ END POST ~ 3PON (@ L0 NORTH)
ONE ~ END POST ~ 3P8N (@ L8 NORTH)
ALIKE EXCEPT FOR MARK
ONE ~ END POST ~ 3P9N (@ L9 NORTH)
ONE ~ END POST ~ 3P19N (@ L19 NORTH)

ONE ~ END POST ~ 3POS (@ L0 SOUTH)
ONE ~ END POST ~ 3P8S (@ L8 SOUTH)
ALIKE EXCEPT FOR MARK
ONE ~ END POST ~ 3P9S (@ L9 SOUTH)
ONE ~ END POST ~ 3P19S (@ L19 SOUTH)

SHOP NOTE "G"

AFTER WELDING, POSTS SHALL BE HOT DIP GALVANIZED IN ACCORDANCE WITH SUBSECTION 506.15.

SHOP NOTE:

DO NOT SHIP FROM THIS DRAWING

BILL OF MATERIAL

JOB NO. 598 | DRAWING NO. 3 | REV.

ABM INFO PAGE	ABM INFO LINE	SHIP MARK	QTY	MARK	MATERIAL	LENGTH FT	LENGTH INCHES	REMARKS	WT	PROCUREMENT NOTES
		3PON	1		END POST			SEE NOTE "G" ALIKE EXCEPT FOR MARK	515	
		3P8N	1		END POST			SEE NOTE "G"	515	
		3P9N	1		END POST			SEE NOTE "G"	515	
		3P19N	1		END POST			SEE NOTE "G"	515	
1	T		4	xlah	W 14x90	4	2 5/16	M270-50T2	377	
4	B		4	xlam	PL 1 1/2x18	1	6	M270-50T2	138	
		3POS	1		END POST			SEE NOTE "G" ALIKE EXCEPT FOR MARK	515	
		3P8S	1		END POST			SEE NOTE "G"	515	
		3P9S	1		END POST			SEE NOTE "G"	515	
		3P19S	1		END POST			SEE NOTE "G"	515	
1	T		4	xlak	W 14x90	4	2 5/16	M270-50T2	377	
4	B		4	xlam	PL 1 1/2x18	1	6	M270-50T2	138	

NOTES:
1. FOR GENERAL NOTES SEE DWG. GN1.
2. FOR STANDARD DETAILS SEE DWG. X1.

REV.	DATE	REMARKS	DWN	CHK	APVL	SHOP
0						

MATERIAL: M270-50	SURFACE PREP. & PAINT: HOT-DIP GALV.	HOLES: 15/16ø	SHOP BOLTS: NONE

DESCRIPTION: BOTTOM CHORD END POSTS

CASCO BAY STEEL STRUCTURES, INC.
1 WALLACE AVE. SOUTH PORTLAND, ME 04106
PHONE (207) 780-6722 FAX. (207) 780-6726
TENSOR 3285

STRUCTURE: TH-10 OVER OTTER CREEK PONY TRUSS BRIDGE	DRAWN: RB	DATE: 12/16/15	
	CHKD: WJL	DATE: 1/13/16	
LOCATION: RUTLAND CITY, VERMONT	JOB NO. 598	DWG NO. 3	
PROJ NO. BRF 3000 (19)			
CUSTOMER: KUBRICKY CONSTRUCTION CORP.		REV. △	

WJL Thu, Jan 21, 2016 04:08:26 PM c:\work\jobs\3285\3 : Rev0

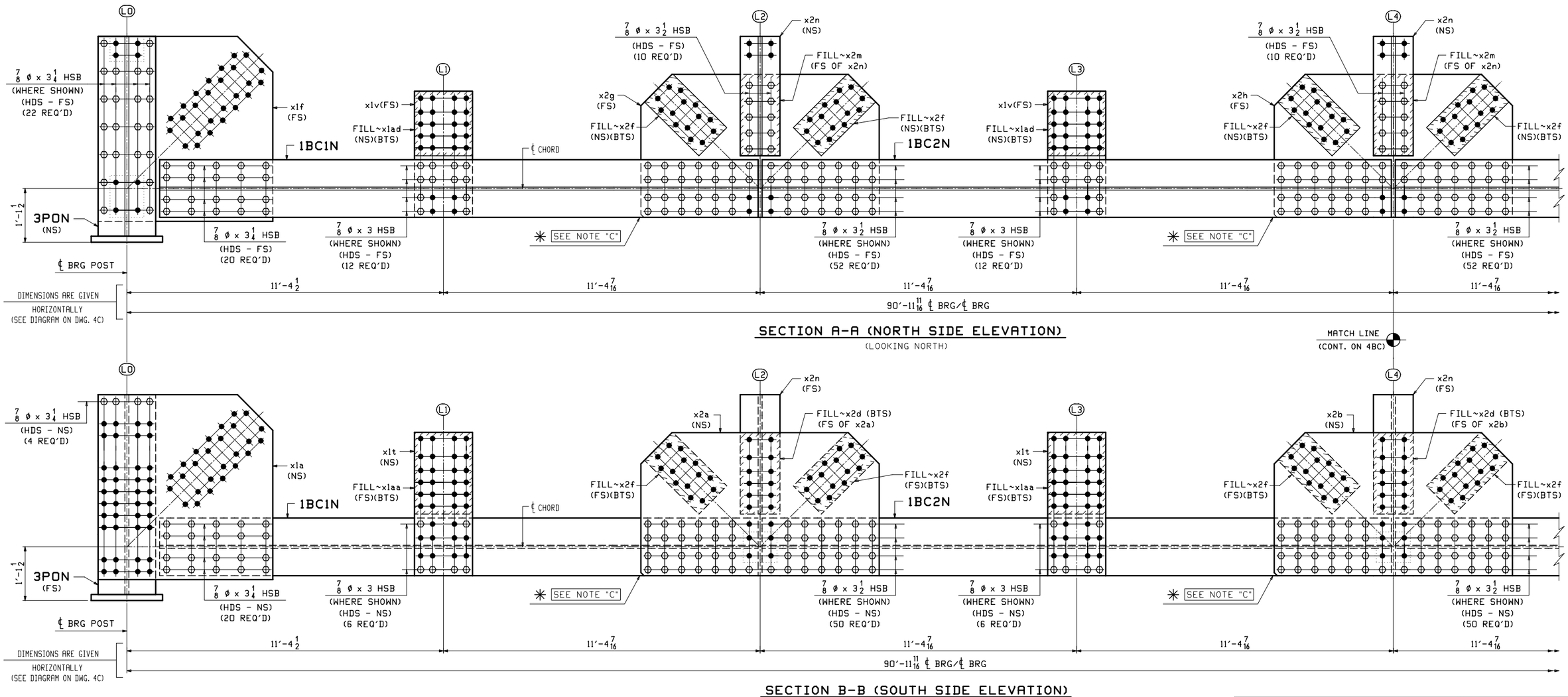

SECTION A-A (NORTH SIDE ELEVATION)

(LOOKING NORTH)

SECTION B-B (SOUTH SIDE ELEVATION)

(LOOKING NORTH)

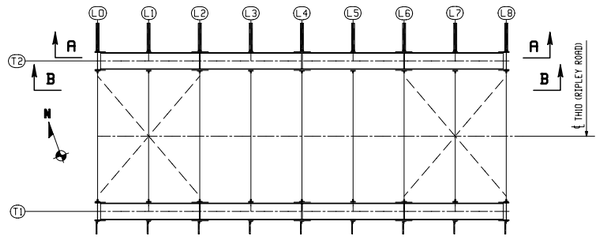

KEY PLAN FOR SPAN 1

ONE ~ BOTTOM CHORD ASSEMBLY ~ 4BC1N

(@ NORTH TRUSS T2 - SPAN 1)

(FOR BLOCKING DIAGRAM SEE DWG. 4C)

NOTES:

1. FOR GENERAL NOTES SEE DWG. GN1.
2. FOR STANDARD DETAILS SEE DWG. X1 & X2.
3. FOR SUB-ASSEMBLY DETAILS SEE DWG. 1 & 3.
4. BTS DENOTES BOLT TO SHIP OR SECURE FOR SHIPMENT.
5. SHOP BOLTS SHALL BE 7/8 ø A325-1.
   ALL BOLTS SHALL BE WITH ONE HARDENED WASHER AND ONE DTI WASHER.
   BOLTS AND WASHERS SHALL BE MECHANICALLY GALVANIZED.

✳ SHOP NOTE "C"

FOR PLATE ORIENTATION PLACE CLIP TOWARDS SIDE SHOWN.

WORK THIS DWG. WITH DWG. 4BC & 4C

REV.	DATE	REMARKS	DWN	CHK	APVL	SHOP
0						

MATERIAL:	SURFACE PREP. & PAINT:	HOLES:	SHOP BOLTS:
M270-50 (UN)	SEE DWG. GN1	15/16 ø	AS NOTED

DESCRIPTION: BOTTOM CHORD ASSEMBLY (NORTH TRUSS - SPAN 1)

CASCO BAY STEEL STRUCTURES, INC.
1 WALLACE AVE.
SOUTH PORTLAND, ME 04106
PHONE (207) 780-6722
FAX. (207) 780-6726
TENSOR 3285

STRUCTURE: TH-10 OVER OTTER CREEK PONY TRUSS BRIDGE	DRAWN: RB	DATE: 12/16/15	
	CHKD: WJL	DATE: 1/13/16	
LOCATION: RUTLAND CITY, VERMONT	JOB NO.	DWG NO.	
PROJ NO. BRF 3000 (19)	598	4AC	
CUSTOMER: KUBRICKY CONSTRUCTION CORP.		REV. △	

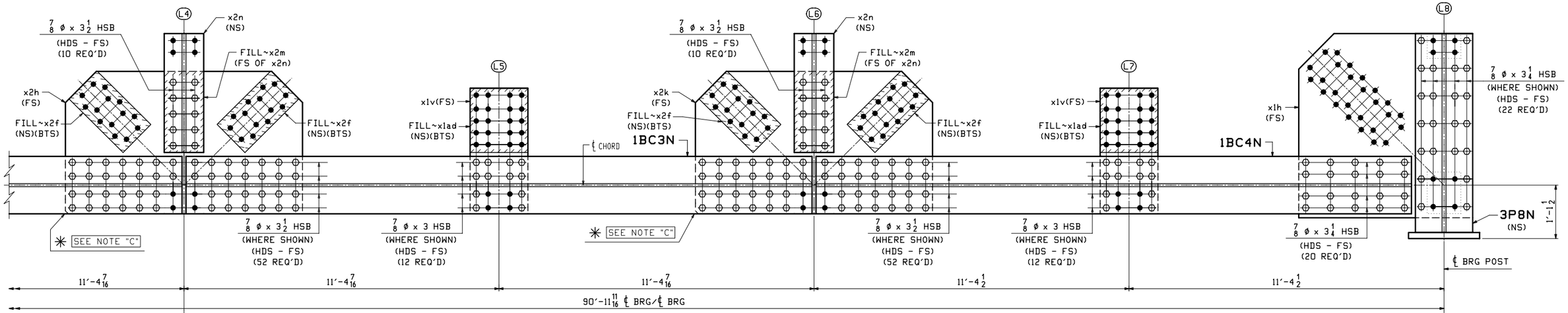

SECTION A-A (NORTH SIDE ELEVATION) (CONTINUED)

(LOOKING NORTH)

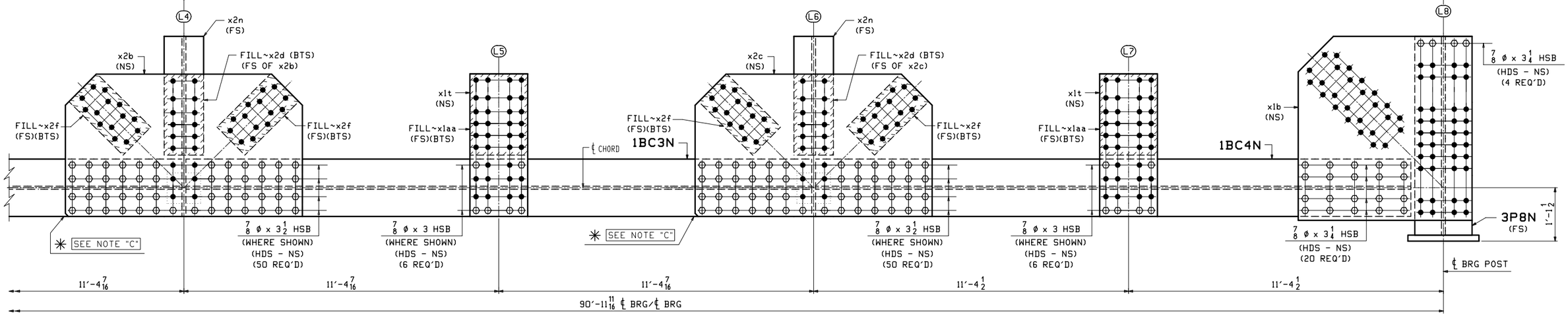

SECTION B-B (SOUTH SIDE ELEVATION) (CONTINUED)

(LOOKING NORTH)

WORK THIS DWG. WITH DWG. 4AC & 4C

REV.	DATE	REMARKS	DWN	CHK	APVL	SHOP
0						

MATERIAL:	SURFACE PREP. & PAINT:	HOLES:	SHOP BOLTS:
M270-50 (UN)	SEE DWG. GN1	15/16 Ø	AS NOTED

DESCRIPTION: BOTTOM CHORD ASSEMBLY (NORTH TRUSS - SPAN 1)

CASCO BAY STEEL STRUCTURES, INC.
1 WALLACE AVE.
SOUTH PORTLAND, ME 04106
PHONE (207) 780-6722
FAX. (207) 780-6726
TENSOR 3285

STRUCTURE:	TH-10 OVER OTTER CREEK PONY TRUSS BRIDGE	DRAWN: RB	DATE: 12/16/15
		CHKD: WJL	DATE: 1/13/16
LOCATION:	RUTLAND CITY, VERMONT	JOB NO.	DWG NO.
PROJ NO.	BRF 3000 (19)	598	4BC
CUSTOMER:	KUBRICKY CONSTRUCTION CORP.		REV. △

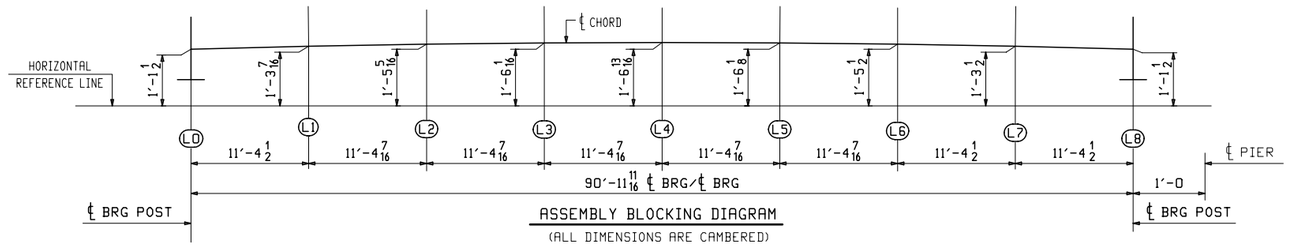

ASSEMBLY BLOCKING DIAGRAM

(ALL DIMENSIONS ARE CAMBERED)
(GUSSET PLATES NOT SHOWN FOR CLARITY)

ABM INFO		SHIP	BILL OF MATERIAL					JOB NO.	DRAWING NO.	REV.
								598	4C	
PAGE	LINE	MARK	QTY	MARK	MATERIAL	LENGTH FT	LENGTH INCHES	REMARKS	WT	PROCUREMENT NOTES
		4BC1N	1		BOTTOM CHORD ASS'Y			SEE NOTE "G"	17946	
			1	1BC1N	BOTTOM CHORD			SEE DWG. 1	1982	
			1	1BC2N	BOTTOM CHORD			SEE DWG. 1	2039	
			1	1BC3N	BOTTOM CHORD			SEE DWG. 1	2039	
			1	1BC4N	BOTTOM CHORD			SEE DWG. 1	1982	
			1	3PON	END POST			SEE DWG. 3	515	
			1	3P8N	END POST			SEE DWG. 3	515	
2	B		1	x1a	PL 1x46 1/16	3	8	M270-50F2 (FCM)	575	
2	B		1	x1b	PL 1x46 1/16	3	8	M270-50F2 (FCM)	575	
2	B		1	x1f	PL 1x46 1/16	3	8	M270-50F2 (FCM)	575	
2	B		1	x1h	PL 1x46 1/16	3	8	M270-50F2 (FCM)	575	
2	D		4	x1t	PL 3/4x14 5/8	3	0 1/16	M270-50F2 (FCM)	112	
2	E		4	x1v	PL 3/4x14 3/8	2	7 3/4	M270-50F2 (FCM)	99	
2	F		4	x1aa	PL 7GA x 14 5/8	1	8 9/16	FILL A1011-50	15	
2	G		4	x1ad	PL 7GA x 14 5/8	1	4 1/4	FILL A1011-50	12	
2	P		1	x2a	PL 1 1/4x36	5	0	M270-50F2 (FCM)	766	
2	P		1	x2b	PL 1 1/4x36	5	0	M270-50F2 (FCM)	766	
2	P		1	x2c	PL 1 1/4x36	5	0	M270-50F2 (FCM)	766	
2	Q		3	x2d	PL 16GA x 10	1	8 1/2	FILL A1011-50	3	
2	R		12	x2f	PL 16GA x 10	1	7 1/4	FILL A1011-50	3	
2	P		1	x2g	PL 1 1/4x36	5	0	M270-50F2 (FCM)	766	
2	P		1	x2h	PL 1 1/4x36	5	0	M270-50F2 (FCM)	766	
2	P		1	x2k	PL 1 1/4x36	5	0	M270-50F2 (FCM)	766	
2	Q		3	x2m	PL 16GA x 10	1	8 1/2	FILL A1011-50	3	
1	U		3	x2n	W 14x61	2	6 1/16	M270-50T2	153	
					SHOP BOLTS					
11	G		72		7/8 ø HSB	0	3	(MECH. GALV.) A325-1	0.80	
11	H		132		7/8 ø HSB	0	3 1/4	(MECH. GALV.) A325-1	0.80	
11	J		336		7/8 ø HSB	0	3 1/2	(MECH. GALV.) A325-1	0.80	
11	Y		540		7/8 ø HSW			(MECH. GALV.) F436	0.07	
11	Z		540		LOAD IND. 7/8 ø HSB			(MECH. GALV.) F959	0.07	

SHOP NOTE "G"

ALL STEEL (EXCEPT FOR BOLTS) SHALL BE HOT DIP GALVANIZED IN ACCORDANCE WITH SUBSECTION 506.15.
BOLTS AND WASHERS SHALL BE MECHANICALLY GALVANIZED IN ACCORDANCE WITH ASTM B695, CLASS 55.

WORK THIS DWG. WITH DWG. 4AC & 4BC

REV.	DATE	REMARKS	DWN	CHK	APVL	SHOP
0						

MATERIAL:	SURFACE PREP. & PAINT:	HOLES:	SHOP BOLTS:
M270-50 (UN)	SEE DWG. GN1	15/16ø	AS NOTED

DESCRIPTION: BOTTOM CHORD ASSEMBLY (NORTH TRUSS - SPAN 1)

CASCO BAY STEEL STRUCTURES, INC.
1 WALLACE AVE. SOUTH PORTLAND, ME 04106
PHONE (207) 780-6722 FAX. (207) 780-6726
TENSOR 3285

STRUCTURE:	DRAWN:	DATE:
TH-10 OVER OTTER CREEK PONY TRUSS BRIDGE	RB	12/16/15
	CHKD: WJL	DATE: 1/14/16
LOCATION: RUTLAND CITY, VERMONT	JOB NO.	DWG NO.
PROJ NO. BRF 3000 (19)	598	4C
CUSTOMER: KUBRICKY CONSTRUCTION CORP.		REV. △

WJL Thu Jan 21, 2016 04:11:45 PM c:\users\john\3285-4C.1 Rev0

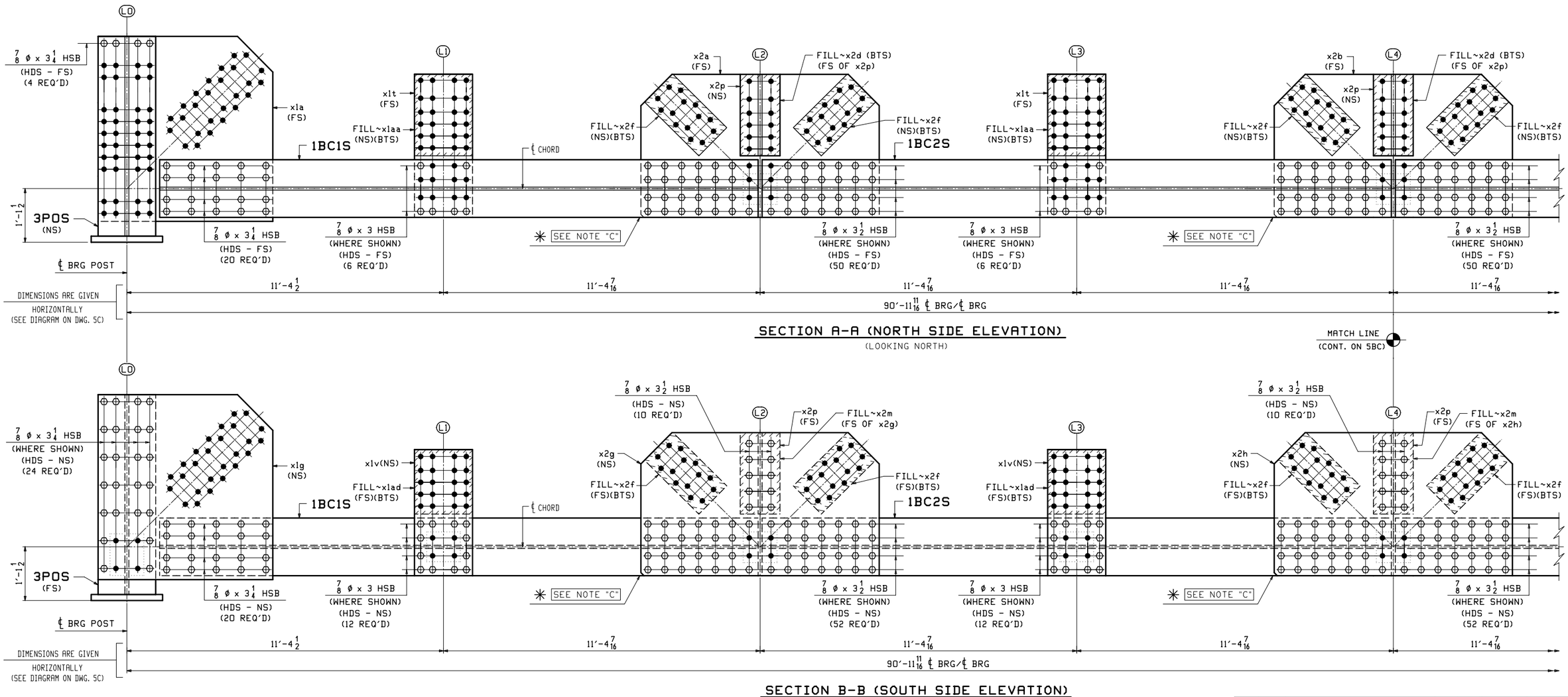

SECTION A-A (NORTH SIDE ELEVATION)

(LOOKING NORTH)

SECTION B-B (SOUTH SIDE ELEVATION)

(LOOKING NORTH)

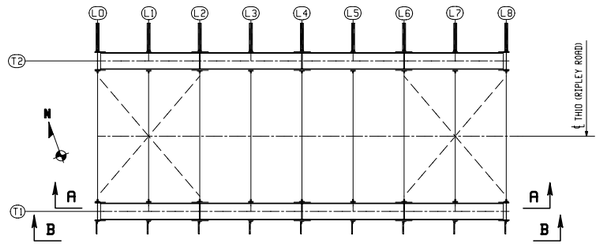

KEY PLAN FOR SPAN 1

ONE ~ BOTTOM CHORD ASSEMBLY ~ 5BC1S

(@ SOUTH TRUSS T1 - SPAN 1)
(FOR BLOCKING DIAGRAM SEE DWG. 5C)

NOTES:

1. FOR GENERAL NOTES SEE DWG. GN1.
2. FOR STANDARD DETAILS SEE DWG. X1 & X2.
3. FOR SUB-ASSEMBLY DETAILS SEE DWG. 1 & 3.
4. BTS DENOTES BOLT TO SHIP OR SECURE FOR SHIPMENT.
5. SHOP BOLTS SHALL BE 7/8 Ø A325-1.
   ALL BOLTS SHALL BE WITH ONE HARDENED WASHER AND ONE DTI WASHER.
   BOLTS AND WASHERS SHALL BE MECHANICALLY GALVANIZED.

✳ SHOP NOTE "C"

FOR PLATE ORIENTATION PLACE
CLIP TOWARDS SIDE SHOWN.

WORK THIS DWG. WITH DWG. 5BC & 5C

REV.	DATE	REMARKS	DWN	CHK	APVL	SHOP
0						

MATERIAL:	SURFACE PREP. & PAINT:	HOLES:	SHOP BOLTS:
M270-50 (UN)	SEE DWG. GN1	15/16 Ø	AS NOTED

DESCRIPTION: BOTTOM CHORD ASSEMBLY (SOUTH TRUSS - SPAN 1)

CASCO BAY STEEL STRUCTURES, INC.
1 WALLACE AVE. SOUTH PORTLAND, ME 04106
PHONE (207) 780-6722 FAX. (207) 780-6726
TENSOR 3285

STRUCTURE: TH-10 OVER OTTER CREEK PONY TRUSS BRIDGE	DRAWN: RB	DATE: 12/16/15	
	CHKD: WJL	DATE: 1/14/16	
LOCATION: RUTLAND CITY, VERMONT	JOB NO.	DWG NO.	
PROJ NO. BRF 3000 (19)	598	5AC	
CUSTOMER: KUBRICKY CONSTRUCTION CORP.		REV. △	

Fri Jan 22, 2016 10:04:48 AM C:\work\jobs\3285\dwg\5ac.r.dwg
RB

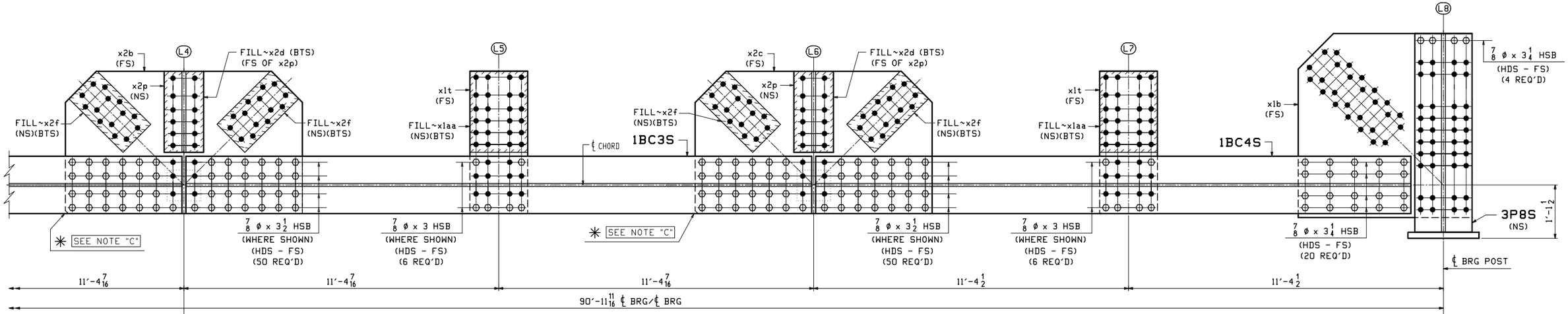

SECTION A-A (NORTH SIDE ELEVATION) (CONTINUED)

(LOOKING NORTH)

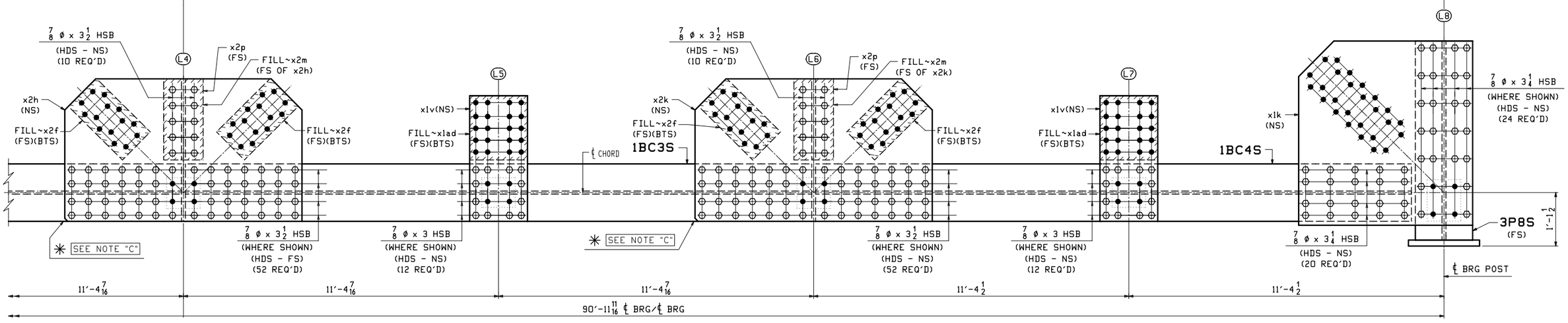

SECTION B-B (SOUTH SIDE ELEVATION) (CONTINUED)

(LOOKING NORTH)

WORK THIS DWG. WITH DWG. 5AC & 5C

REV.	DATE	REMARKS	DWN	CHK	APVL	SHOP
0						

MATERIAL:	SURFACE PREP. & PAINT:	HOLES:	SHOP BOLTS:
M270-50 (UN)	SEE DWG. GN1	15/16 ø	AS NOTED

DESCRIPTION: BOTTOM CHORD ASSEMBLY (SOUTH TRUSS - SPAN 1)

CASCO BAY STEEL STRUCTURES, INC.
1 WALLACE AVE.
SOUTH PORTLAND, ME 04106
PHONE (207) 780-6722
FAX. (207) 780-6726
TENSOR 3285

STRUCTURE:	TH-10 OVER OTTER CREEK PONY TRUSS BRIDGE	DRAWN: RB	DATE: 12/16/15
		CHKD: WJL	DATE: 1/14/16
LOCATION:	RUTLAND CITY, VERMONT	JOB NO.	DWG NO.
PROJ NO.	BRF 3000 (19)	598	5BC
CUSTOMER:	KUBRICKY CONSTRUCTION CORP.		REV. △

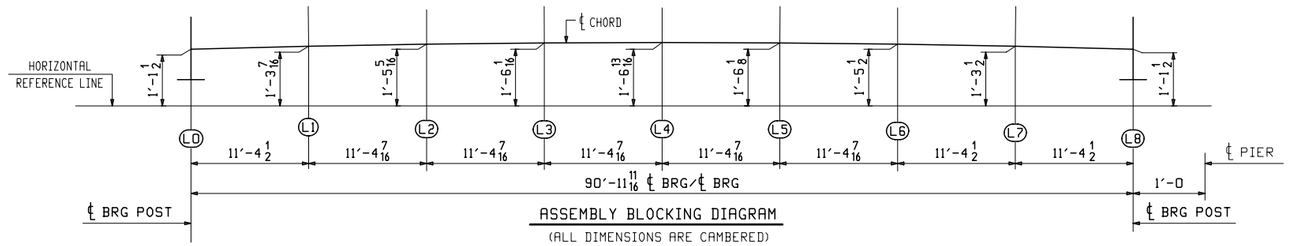

ASSEMBLY BLOCKING DIAGRAM

(ALL DIMENSIONS ARE CAMBERED)
(GUSSET PLATES NOT SHOWN FOR CLARITY)

ABM INFO		SHIP	BILL OF MATERIAL					JOB NO.	DRAWING NO.	REV.
								598	5C	
PAGE	LINE	MARK	QTY	MARK	MATERIAL	LENGTH FT	LENGTH INCHES	REMARKS	WT	PROCUREMENT NOTES
		5BC1S	1		BOTTOM CHORD ASS'Y			SEE NOTE "G"	17804	
			1	1BC1S	BOTTOM CHORD			SEE DWG. 1	1982	
			1	1BC2S	BOTTOM CHORD			SEE DWG. 1	2039	
			1	1BC3S	BOTTOM CHORD			SEE DWG. 1	2039	
			1	1BC4S	BOTTOM CHORD			SEE DWG. 1	1982	
			1	3POS	END POST			SEE DWG. 3	515	
			1	3P8S	END POST			SEE DWG. 3	515	
2	B		1	x1a	PL 1x46 1/16	3	8	M270-50F2 (FCM)	575	
2	B		1	x1b	PL 1x46 1/16	3	8	M270-50F2 (FCM)	575	
2	B		1	x1g	PL 1x46 1/16	3	8	M270-50F2 (FCM)	575	
2	B		1	x1k	PL 1x46 1/16	3	8	M270-50F2 (FCM)	575	
2	D		4	x1t	PL 3/4x14 5/8	3	0 1/16	M270-50F2 (FCM)	112	
2	E		4	x1v	PL 3/4x14 5/8	2	7 3/4	M270-50F2 (FCM)	99	
2	F		4	x1aa	PL 7GA x 14 5/8	1	8 9/16	FILL AI011-50	15	
2	G		4	x1ad	PL 7GA x 14 5/8	1	4 1/4	FILL AI011-50	12	
2	P		1	x2a	PL 1 1/4x36	5	0	M270-50F2 (FCM)	766	
2	P		1	x2b	PL 1 1/4x36	5	0	M270-50F2 (FCM)	766	
2	P		1	x2c	PL 1 1/4x36	5	0	M270-50F2 (FCM)	766	
2	Q		3	x2d	PL 16GA x 10	1	8 1/2	FILL AI011-50	3	
2	R		12	x2f	PL 16GA x 10	1	7 1/4	FILL AI011-50	3	
2	P		1	x2g	PL 1 1/4x36	5	0	M270-50F2 (FCM)	766	
2	P		1	x2h	PL 1 1/4x36	5	0	M270-50F2 (FCM)	766	
2	P		1	x2k	PL 1 1/4x36	5	0	M270-50F2 (FCM)	766	
2	Q		3	x2m	PL 16GA x 10	1	8 1/2	FILL AI011-50	3	
1	V		3	x2p	W 14x61	1	8 1/2	M270-50T2	104	
					SHOP BOLTS					
11	G		72		7/8 ø HSB	0	3	(MECH. GALV.) A325-1	0.80	
11	H		136		7/8 ø HSB	0	3 1/4	(MECH. GALV.) A325-1	0.80	
11	J		336		7/8 ø HSB	0	3 1/2	(MECH. GALV.) A325-1	0.80	
11	Y		544		7/8 ø HSW			(MECH. GALV.) F436	0.07	
11	Z		544		LOAD IND. 7/8 ø HSB			(MECH. GALV.) F959	0.07	

SHOP NOTE "G"

ALL STEEL (EXCEPT FOR BOLTS) SHALL BE HOT DIP GALVANIZED IN ACCORDANCE WITH SUBSECTION 506.15.
BOLTS AND WASHERS SHALL BE MECHANICALLY GALVANIZED IN ACCORDANCE WITH ASTM B695, CLASS 55.

WORK THIS DWG. WITH DWG. 5AC & 5BC

REV.	DATE	REMARKS	DWN	CHK	APVL	SHOP
0						

MATERIAL:	SURFACE PREP. & PAINT:	HOLES:	SHOP BOLTS:
M270-50 (UN)	SEE DWG. GN1	15/16ø	AS NOTED

DESCRIPTION: BOTTOM CHORD ASSEMBLY (SOUTH TRUSS - SPAN 1)

CASCO BAY STEEL STRUCTURES, INC.
1 WALLACE AVE. PHONE (207) 780-6722
SOUTH PORTLAND, ME 04106 FAX. (207) 780-6726
TENSOR 3285

STRUCTURE:	DRAWN:	DATE:
TH-10 OVER OTTER CREEK PONY TRUSS BRIDGE	RB	12/16/15
	CHKD: WJL	DATE: 1/14/16
LOCATION: RUTLAND CITY, VERMONT	JOB NO.	DWG NO.
PROJ NO. BRF 3000 (19)	598	5C
CUSTOMER: KUBRICKY CONSTRUCTION CORP.		REV. △

WJL Thu Jan 21, 2016 04:48:58 PM /users/jobs/3285/5C.1 Rev0

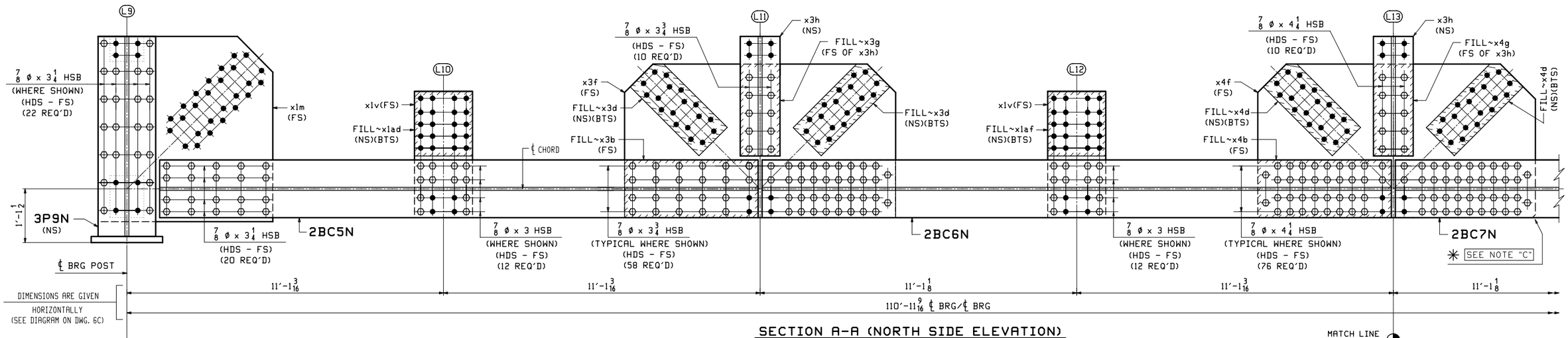

SECTION A-A (NORTH SIDE ELEVATION)

(LOOKING NORTH)

MATCH LINE (CONT. ON 6BC)

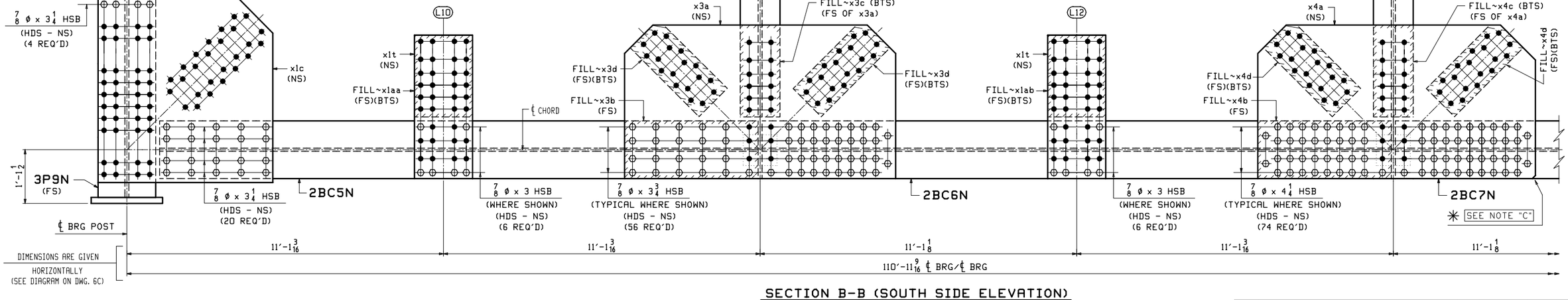

SECTION B-B (SOUTH SIDE ELEVATION)

(LOOKING NORTH)

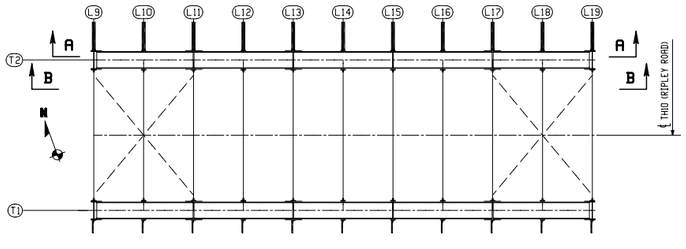

KEY PLAN FOR SPAN 2

ONE ~ BOTTOM CHORD ASSEMBLY ~ 6BC2N

(@ NORTH TRUSS T2 - SPAN 2)
(FOR BLOCKING DIAGRAM SEE DWG. 6C)

NOTES:

1. FOR GENERAL NOTES SEE DWG. GN1.
2. FOR STANDARD DETAILS SEE DWG. X1, X3 & X4.
3. FOR SUB-ASSEMBLY DETAILS SEE DWG. 2 & 3.
4. BTS DENOTES BOLT TO SHIP OR SECURE FOR SHIPMENT.
5. SHOP BOLTS SHALL BE 7/8 Ø A325-1.
   ALL BOLTS SHALL BE WITH ONE HARDENED WASHER AND ONE DTI WASHER.
   BOLTS AND WASHERS SHALL BE MECHANICALLY GALVANIZED.

✳ SHOP NOTE "C"

FOR PLATE ORIENTATION PLACE CLIP TOWARDS SIDE SHOWN.

WORK THIS DWG. WITH DWG. 6BC & 6C

REV.	DATE	REMARKS	DWN	CHK	APVL	SHOP
0						

MATERIAL: M270-50 (UN)	SURFACE PREP. & PAINT: SEE DWG. GN1	HOLES: 15/16Ø	SHOP BOLTS: AS NOTED

DESCRIPTION: BOTTOM CHORD ASSEMBLY (NORTH TRUSS - SPAN 2)

CASCO BAY STEEL STRUCTURES, INC.
1 WALLACE AVE. SOUTH PORTLAND, ME 04106
PHONE (207) 780-6722 FAX. (207) 780-6726
TENSOR 3285

STRUCTURE: TH-10 OVER OTTER CREEK PONY TRUSS BRIDGE		DRAWN: RB	DATE: 12/17/15
		CHKD: WJL	DATE: 1/14/16
LOCATION: RUTLAND CITY, VERMONT		JOB NO.	DWG NO.
PROJ NO. BRF 3000 (19)		598	6AC
CUSTOMER: KUBRICKY CONSTRUCTION CORP.			REV. △

RB Fri, Jan 22, 2016 10:11:16 AM c:\work\pbs\3285\6AC - Rev.0

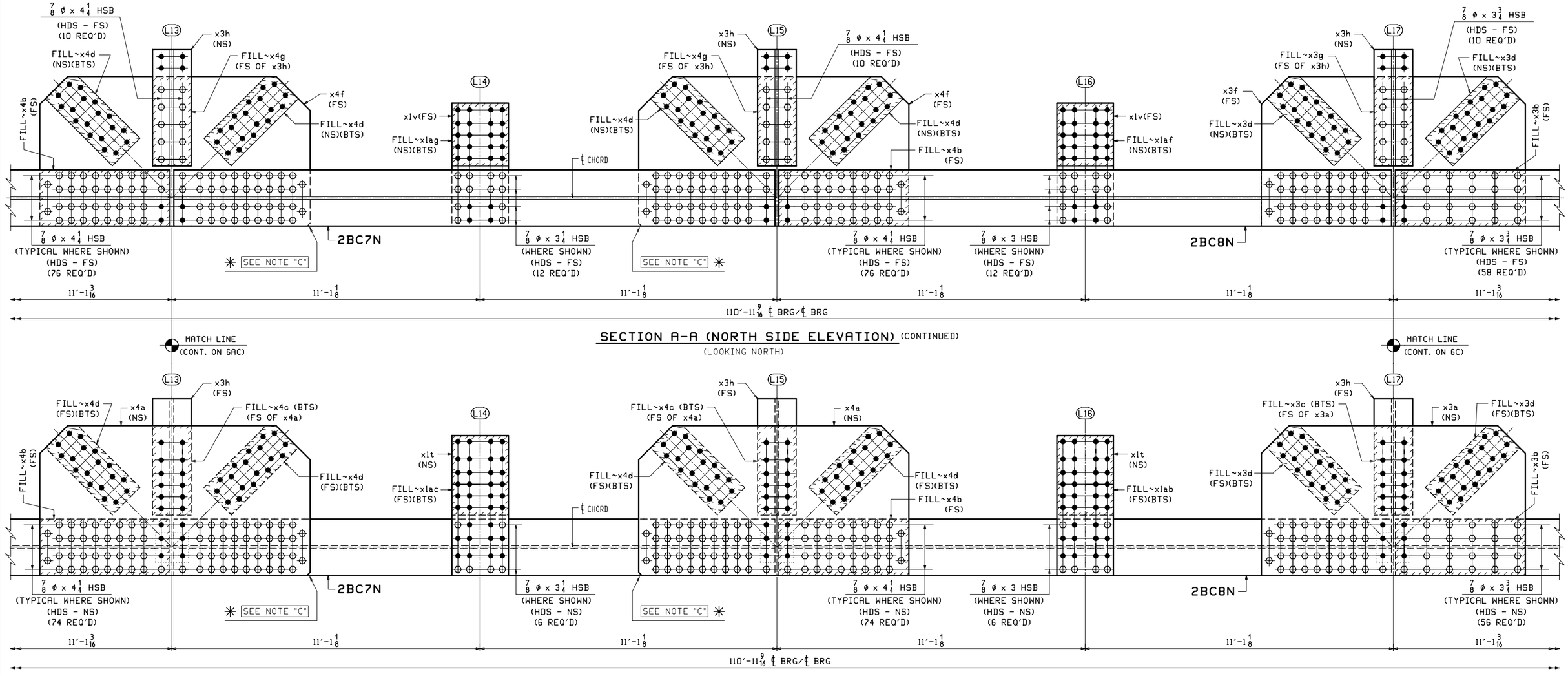

MATCH LINE
(CONT. ON 6AC)

MATCH LINE
(CONT. ON 6C)

SECTION A-A (NORTH SIDE ELEVATION) (CONTINUED)

(LOOKING NORTH)

SECTION B-B (SOUTH SIDE ELEVATION) (CONTINUED)

(LOOKING NORTH)

WORK THIS DWG. WITH DWG. 6AC & 6C

REV.	DATE	REMARKS	DWN	CHK	APVL	SHOP
0						

MATERIAL:	SURFACE PREP. & PAINT:	HOLES:	SHOP BOLTS:
M270-50 (UN)	SEE DWG. GN1	15/16 Ø	AS NOTED

DESCRIPTION: BOTTOM CHORD ASSEMBLY (NORTH TRUSS - SPAN 2)

CASCO BAY STEEL STRUCTURES, INC.
1 WALLACE AVE. SOUTH PORTLAND, ME 04106
PHONE (207) 780-6722 FAX. (207) 780-6726
TENSOR 3285

STRUCTURE: TH-10 OVER OTTER CREEK PONY TRUSS BRIDGE	DRAWN: RB	DATE: 12/17/15	
	CHKD: WJL	DATE: 1/14/16	
LOCATION: RUTLAND CITY, VERMONT	JOB NO.	DWG NO.	
PROJ NO. BRF 3000 (19)	598	6BC	
CUSTOMER: KUBRICKY CONSTRUCTION CORP.		REV. △	

RB Fri Jan 22, 2016 08:44:34 AM c:\work\jobs\3285\6BC.dwg

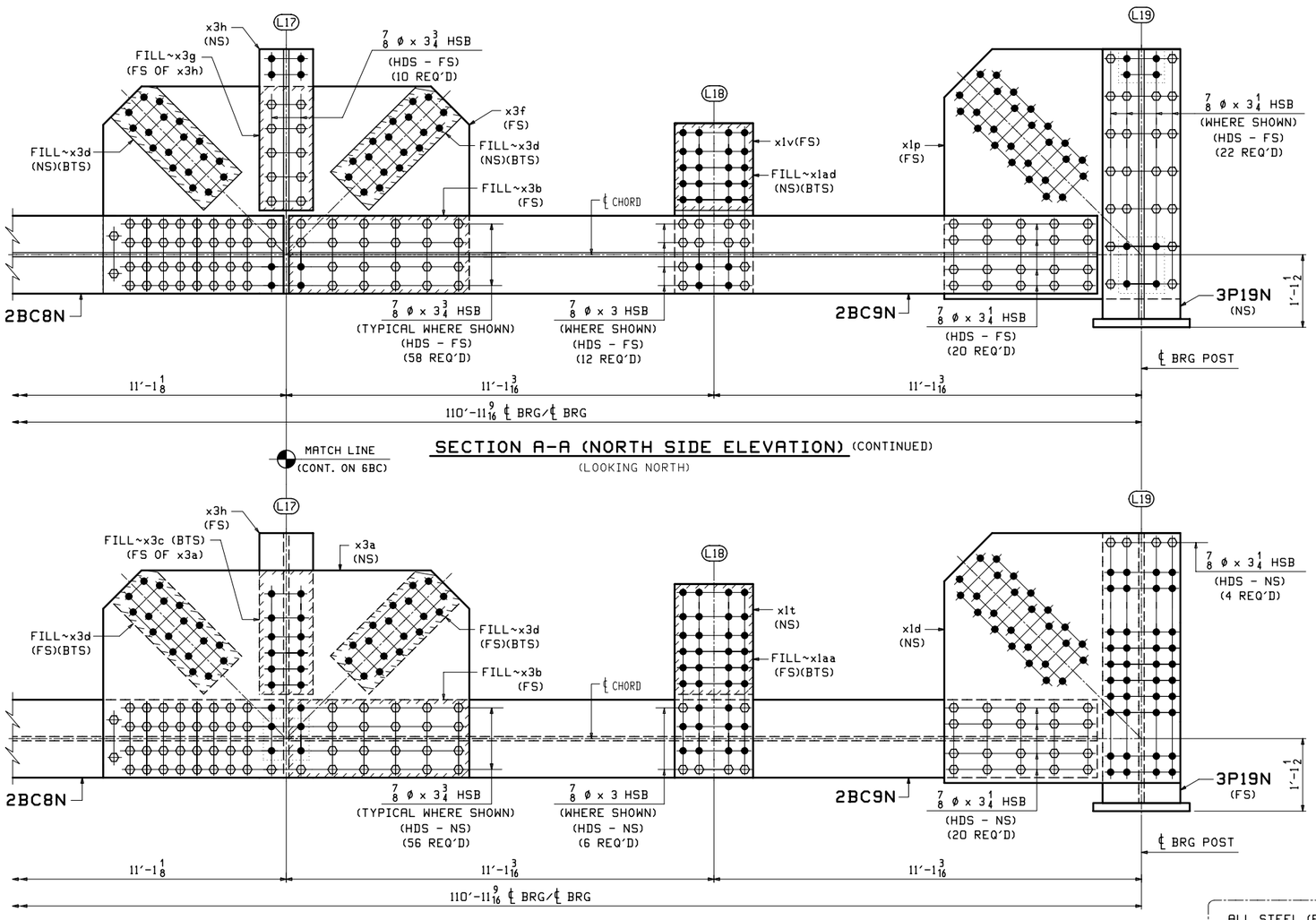

SECTION A-A (NORTH SIDE ELEVATION) (CONTINUED)

(LOOKING NORTH)

SECTION B-B (SOUTH SIDE ELEVATION) (CONTINUED)

(LOOKING NORTH)

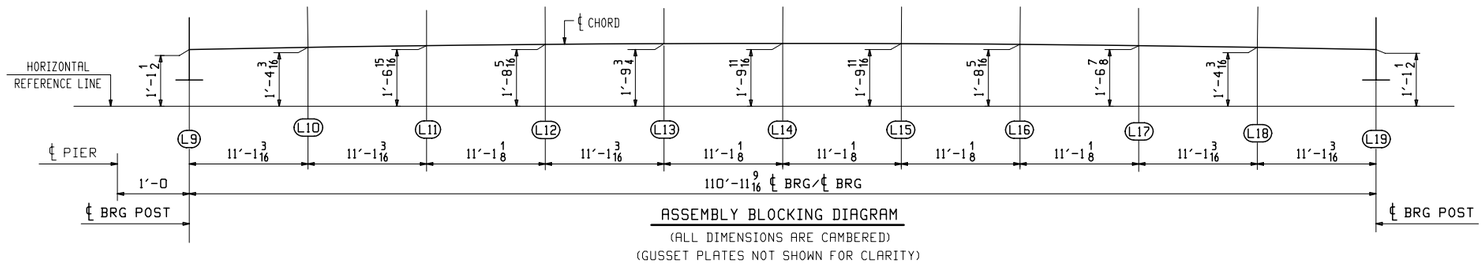

ASSEMBLY BLOCKING DIAGRAM

(ALL DIMENSIONS ARE CAMBERED)
(GUSSET PLATES NOT SHOWN FOR CLARITY)

WORK THIS DWG. WITH DWG. 6AC & 6BC

BILL OF MATERIAL

ABM INFO PAGE	ABM INFO LINE	SHIP MARK	QTY	MARK	MATERIAL	LENGTH FT	LENGTH INCHES	REMARKS	WT	PROCUREMENT NOTES
		6BC2N	1		BOTTOM CHORD ASS'Y			SEE NOTE "G"	27184	
			1	2BC5N	BOTTOM CHORD			SEE DWG. 2	1933	
			1	2BC6N	BOTTOM CHORD			SEE DWG. 2	2189	
			1	2BC7N	BOTTOM CHORD			SEE DWG. 2	2653	
			1	2BC8N	BOTTOM CHORD			SEE DWG. 2	2189	
			1	2BC9N	BOTTOM CHORD			SEE DWG. 2	1933	
			1	3P9N	END POST			SEE DWG. 3	515	
			1	3P19N	END POST			SEE DWG. 3	515	
2	B		1	x1c	PL 1x46 1/16	3	8	M270-50F2 (FCM)	575	
2	B		1	x1d	PL 1x46 1/16	3	8	M270-50F2 (FCM)	575	
2	B		1	x1m	PL 1x46 1/16	3	8	M270-50F2 (FCM)	575	
2	B		1	x1p	PL 1x46 1/16	3	8	M270-50F2 (FCM)	575	
2	D		5	x1t	PL 3/4x14 5/8	3	0 1/16	M270-50F2 (FCM)	112	
2	E		5	x1v	PL 3/4x14 5/8	2	7 3/4	M270-50F2 (FCM)	99	
2	F		2	x1aa	PL 7GA x 14 5/8	1	8 9/16	FILL A1011-50	15	
2	H		2	x1ab	PL 1/4x14 5/8	1	8 9/16	FILL	21	
2	K		1	x1ac	PL 7/16x14 5/8	1	8 9/16	FILL	37	
2	G		2	x1ad	PL 7GA x 14 5/8	1	4 1/4	FILL A1011-50	12	
2	J		2	x1af	PL 1/4x14 5/8	1	4 1/4	FILL	17	
2	L		1	x1ag	PL 7/16x14 5/8	1	4 1/4	FILL	29	
2	T		2	x3a	PL 1 1/2x38 3/4	5	8 1/4	M270-50F2 (FCM)	1125	
2	U		4	x3b	PL 16GA x 14 1/2	2	9 5/8	FILL A1011-50	8	
2	V		2	x3c	PL 12GA x 10	1	11 1/8	FILL A1011-50	7	
2	V		8	x3d	PL 12GA x 10	2	0 1/2	FILL A1011-50	7	
2	T		2	x3f	PL 1 1/2x38 3/4	5	8 1/4	M270-50F2 (FCM)	1125	
2	V		2	x3g	PL 12GA x 10	1	11 1/8	FILL A1011-50	7	
1	U		4	x3h	W 14x61	2	6 1/16	M270-50T2	153	
2	X		2	x4a	PL 1 1/2x38 3/4	5	9 7/8	M270-50F2 (FCM)	1344	
2	Y		4	x4b	PL 7GA x 14 5/8	2	9 5/8	FILL A1011-50	25	
2	Z		2	x4c	PL 5/16x10	1	11 1/8	FILL	21	
2	Z		8	x4d	PL 5/16x10	2	0 1/2	FILL	22	
2	X		2	x4f	PL 1 1/2x38 3/4	5	9 7/8	M270-50F2 (FCM)	1344	
2	Z		2	x4g	PL 5/16x10	1	11 1/8	FILL	21	
					SHOP BOLTS					
11	G		72		7/8 ø HSB	0	3	(MECH. GALV.) A325-1	0.80	
11	H		150		7/8 ø HSB	0	3 1/4	(MECH. GALV.) A325-1	0.80	
11	K		248		7/8 ø HSB	0	3 3/4	(MECH. GALV.) A325-1	0.80	
11	M		320		7/8 ø HSB	0	4 1/4	(MECH. GALV.) A325-1	0.80	
11	Y		790		7/8 ø HSK			(MECH. GALV.) F436	0.07	
11	Z		790		LOAD IND. 7/8 ø HSB WASH FOR 7/8 ø HSB			(MECH. GALV.) F959	0.07	

JOB NO. 598 | DRAWING NO. 6C | REV.

SHOP NOTE "G"

ALL STEEL (EXCEPT FOR BOLTS) SHALL BE HOT DIP GALVANIZED IN ACCORDANCE WITH SUBSECTION 506.15.
BOLTS AND WASHERS SHALL BE MECHANICALLY GALVANIZED IN ACCORDANCE WITH ASTM B695, CLASS 55.

REV.	DATE	REMARKS	DWN	CHK	APVL	SHOP
0						

MATERIAL:	SURFACE PREP. & PAINT:	HOLES:	SHOP BOLTS:
M270-50 (UN)	SEE DWG. GN1	15/16ø	AS NOTED

DESCRIPTION: BOTTOM CHORD ASSEMBLY (NORTH TRUSS - SPAN 2)

CASCO BAY STEEL STRUCTURES, INC.
1 WALLACE AVE. SOUTH PORTLAND, ME 04106
PHONE (207) 780-6722 FAX. (207) 780-6726
TENSOR 3285

STRUCTURE: TH-10 OVER OTTER CREEK PONY TRUSS BRIDGE	DRAWN: RB	DATE: 12/17/15	
	CHKD: WJL	DATE: 1/14/16	
LOCATION: RUTLAND CITY, VERMONT	JOB NO.	DWG NO.	
PROJ NO. BRF 3000 (19)	598	6C	
CUSTOMER: KUBRICKY CONSTRUCTION CORP.		REV. △	

Fri, Jan 22, 2016 08:30:38 AM c:\users\john\3285-6C\ 8x=0
RB

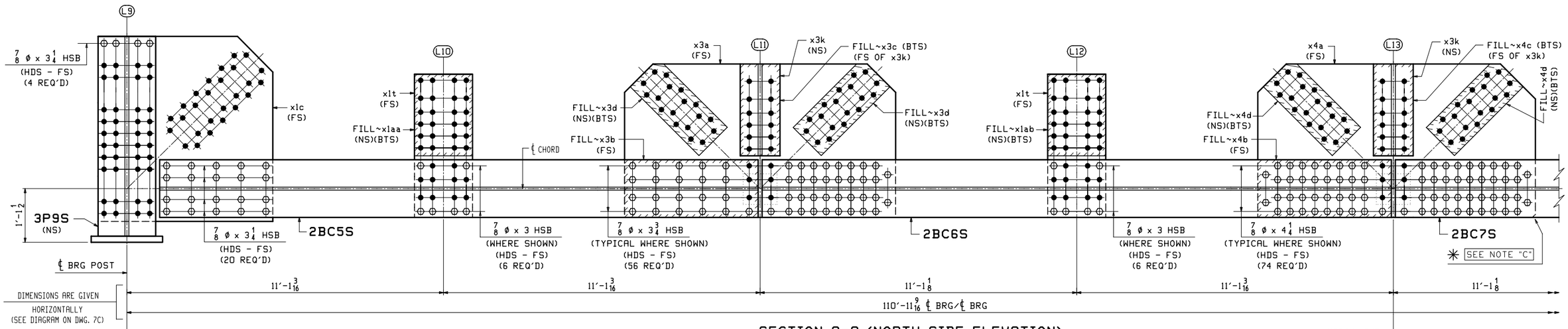

SECTION A-A (NORTH SIDE ELEVATION)

(LOOKING NORTH)

MATCH LINE
(CONT. ON 7BC)

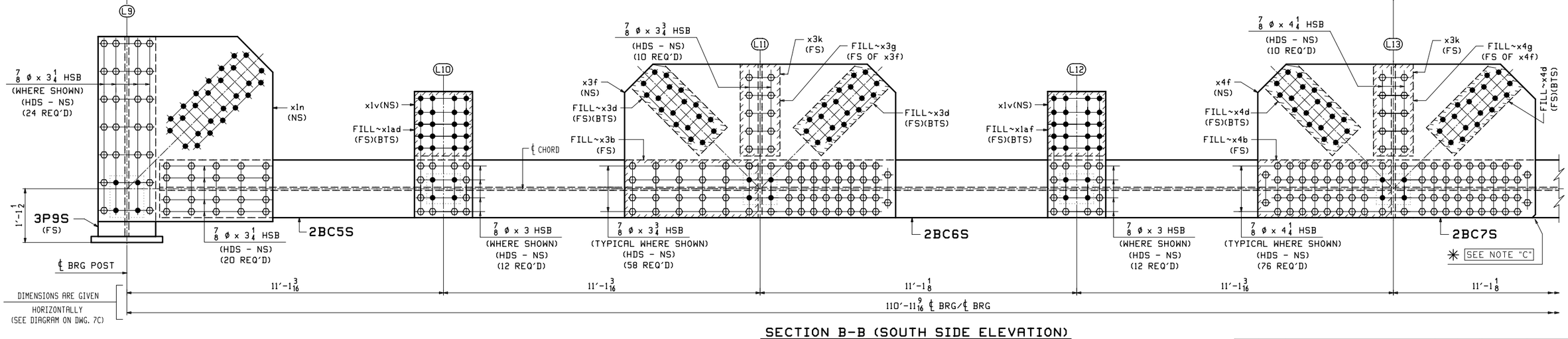

SECTION B-B (SOUTH SIDE ELEVATION)

(LOOKING NORTH)

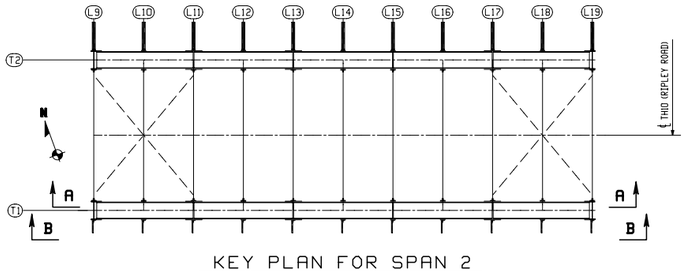

KEY PLAN FOR SPAN 2

ONE ~ BOTTOM CHORD ASSEMBLY ~ 7BC2S

(@ SOUTH TRUSS T1 - SPAN 2)
(FOR BLOCKING DIAGRAM SEE DWG. 7C)

NOTES:
1. FOR GENERAL NOTES SEE DWG. GN1.
2. FOR STANDARD DETAILS SEE DWG. X1, X3 & X4.
3. FOR SUB-ASSEMBLY DETAILS SEE DWG. 2 & 3.
4. BTS DENOTES BOLT TO SHIP OR SECURE FOR SHIPMENT.
5. SHOP BOLTS SHALL BE 7/8 Ø A325-1.
   ALL BOLTS SHALL BE WITH ONE HARDENED WASHER AND ONE DTI WASHER.
   BOLTS AND WASHERS SHALL BE MECHANICALLY GALVANIZED.

SHOP NOTE "C"

FOR PLATE ORIENTATION PLACE CLIP TOWARDS SIDE SHOWN.

WORK THIS DWG. WITH DWG. 7BC & 7C

REV.	DATE	REMARKS	DWN	CHK	APVL	SHOP
0						

MATERIAL:	SURFACE PREP. & PAINT:	HOLES:	SHOP BOLTS:
M270-50 (UN)	SEE DWG. GN1	15/16 Ø	AS NOTED

DESCRIPTION: BOTTOM CHORD ASSEMBLY (SOUTH TRUSS - SPAN 2)

CASCO BAY STEEL STRUCTURES, INC.
1 WALLACE AVE. SOUTH PORTLAND, ME 04106
PHONE (207) 780-6722 FAX. (207) 780-6726
TENSOR 3285

STRUCTURE: TH-10 OVER OTTER CREEK PONY TRUSS BRIDGE		DRAWN: RB	DATE: 12/17/15
		CHKD: WJL	DATE: 1/14/16
LOCATION: RUTLAND CITY, VERMONT		JOB NO.	DWG NO.
PROJ NO. BRF 3000 (19)		598	7BC
CUSTOMER: KUBRICKY CONSTRUCTION CORP.			REV. △

Fri, Jan 22, 2016 10:11:42 AM c:\work\pbw\3285\7BC - Rev.0 RB

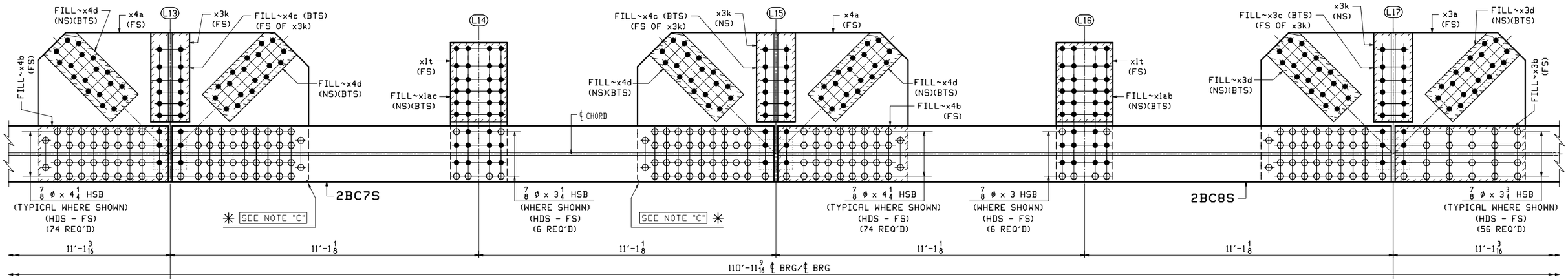

SECTION A-A (NORTH SIDE ELEVATION) (CONTINUED)

(LOOKING NORTH)

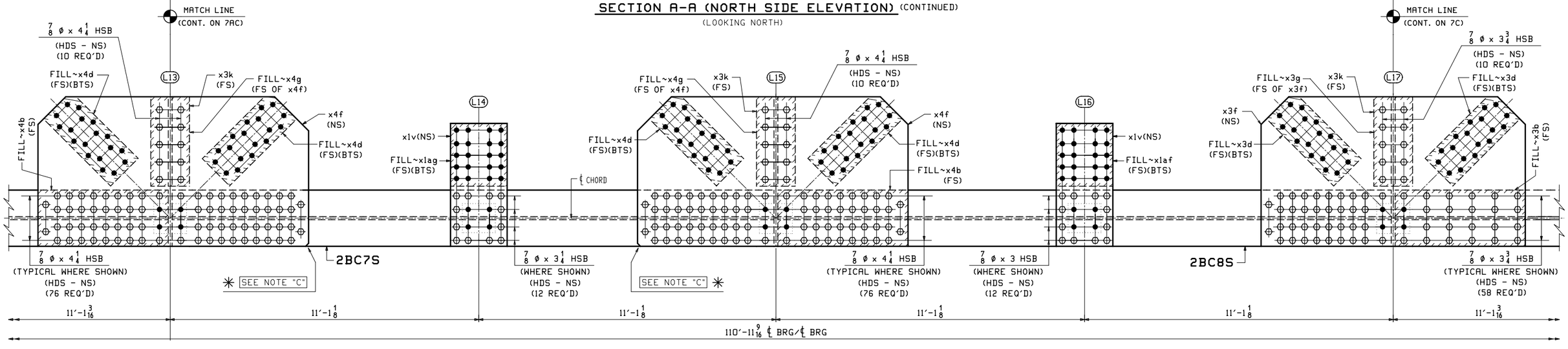

SECTION B-B (SOUTH SIDE ELEVATION) (CONTINUED)

(LOOKING NORTH)

WORK THIS DWG. WITH DWG. 7AC & 7C

REV.	DATE	REMARKS	DWN	CHK	APVL	SHOP
0						

MATERIAL: M270-50 (UN)	SURFACE PREP. & PAINT: SEE DWG. GN1	HOLES: 15/16Ø	SHOP BOLTS: AS NOTED

DESCRIPTION: BOTTOM CHORD ASSEMBLY (SOUTH TRUSS - SPAN 2)

CASCO BAY STEEL STRUCTURES, INC.
1 WALLACE AVE. SOUTH PORTLAND, ME 04106
PHONE (207) 780-6722 FAX. (207) 780-6726
TENSOR 3285

STRUCTURE: TH-10 OVER OTTER CREEK PONY TRUSS BRIDGE	DRAWN: RB	DATE: 12/17/15	
	CHKD: WJL	DATE: 1/14/16	
LOCATION: RUTLAND CITY, VERMONT	JOB NO.	DWG NO.	
PROJ NO. BRF 3000 (19)	598	7BC	
CUSTOMER: KUBRICKY CONSTRUCTION CORP.		REV. △	

RB Fri Jan 22, 2016 08:48:16 AM c:\work\jobs\3285\7BC.dwg

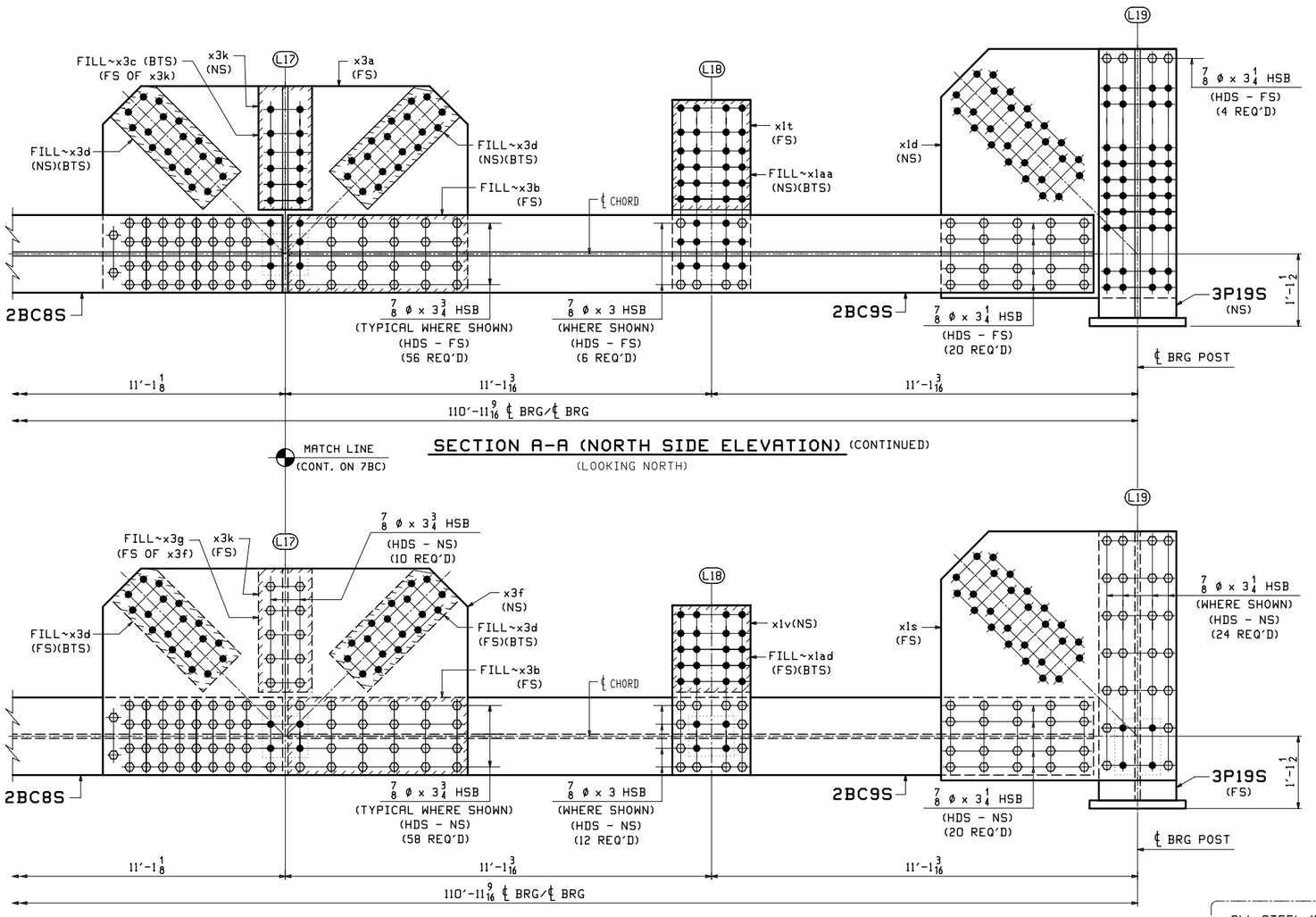

ABM INFO		SHIP	BILL OF MATERIAL					JOB NO.	DRAWING NO.	REV.
								598	7C	
PAGE	LINE	MARK	QTY	MARK	MATERIAL	LENGTH FT	LENGTH INCHES	REMARKS	WT	PROCUREMENT NOTES
		7BC2S	1		BOTTOM CHORD ASS'Y			SEE NOTE "G"	27047	
			1	2BC5S	BOTTOM CHORD			SEE DWG. 2	1933	
			1	2BC6S	BOTTOM CHORD			SEE DWG. 2	2189	
			1	2BC7S	BOTTOM CHORD			SEE DWG. 2	2653	
			1	2BC8S	BOTTOM CHORD			SEE DWG. 2	2189	
			1	2BC9S	BOTTOM CHORD			SEE DWG. 2	1933	
			1	3P9S	END POST			SEE DWG. 3	515	
			1	3P19S	END POST			SEE DWG. 3	515	
2	B		1	x1c	PL 1x46 1/16	3	8	M270-50F2 (FCM)	575	
2	B		1	x1d	PL 1x46 1/16	3	8	M270-50F2 (FCM)	575	
2	B		1	x1n	PL 1x46 1/16	3	8	M270-50F2 (FCM)	575	
2	B		1	x1s	PL 1x46 1/16	3	8	M270-50F2 (FCM)	575	
2	D		5	x1t	PL 3/4x14 5/8	3	0 1/16	M270-50F2 (FCM)	112	
2	E		5	x1v	PL 3/4x14 5/8	2	7 3/4	M270-50F2 (FCM)	99	
2	F		2	x1aa	PL 7GA x 14 5/8	1	8 9/16	FILL A1011-50	15	
2	H		2	x1ab	PL 1/4x14 5/8	1	8 9/16	FILL	21	
2	K		1	x1ac	PL 7/16x14 5/8	1	8 9/16	FILL	37	
2	G		2	x1ad	PL 7GA x 14 5/8	1	4 1/4	FILL A1011-50	12	
2	J		2	x1af	PL 1/4x14 5/8	1	4 1/4	FILL	17	
2	L		1	x1ag	PL 7/16x14 5/8	1	4 1/4	FILL	29	
2	T		2	x3a	PL 1 1/2x38 3/4	5	8 1/4	M270-50F2 (FCM)	1125	
2	U		4	x3b	PL 16GA x 14 1/2	2	9 5/8	FILL A1011-50	8	
2	V		2	x3c	PL 12GA x 10	1	11 1/8	FILL A1011-50	7	
2	V		8	x3d	PL 12GA x 10	2	0 1/2	FILL A1011-50	7	
2	T		2	x3f	PL 1 1/2x38 3/4	5	8 1/4	M270-50F2 (FCM)	1125	
2	V		2	x3g	PL 12GA x 10	1	11 1/8	FILL A1011-50	7	
1	V		4	x3k	W 14x61	1	11 1/8	M270-50T2	118	
2	X		2	x4a	PL 1 1/2x38 3/4	5	9 7/8	M270-50F2 (FCM)	1344	
2	Y		4	x4b	PL 7GA x 14 5/8	2	9 5/8	FILL A1011-50	25	
2	Z		2	x4c	PL 5/16x10	1	11 1/8	FILL	21	
2	Z		8	x4d	PL 5/16x10	2	0 1/2	FILL	22	
2	X		2	x4f	PL 1 1/2x38 3/4	5	9 7/8	M270-50F2 (FCM)	1344	
2	Z		2	x4g	PL 5/16x10	1	11 1/8	FILL	21	
					SHOP BOLTS					
11	G		72		7/8 ø HSB	0	3	(MECH. GALV.) A325-1	0.80	
11	H		154		7/8 ø HSB	0	3 1/4	(MECH. GALV.) A325-1	0.80	
11	K		248		7/8 ø HSB	0	3 3/4	(MECH. GALV.) A325-1	0.80	
11	M		320		7/8 ø HSB	0	4 1/4	(MECH. GALV.) A325-1	0.80	
11	Y		794		7/8 ø HSK			(MECH. GALV.) F436	0.07	
11	Z		794		LOAD IND. 7/8 ø HSB WASH FOR			(MECH. GALV.) F959	0.07	

SHOP NOTE "G"

ALL STEEL (EXCEPT FOR BOLTS) SHALL BE HOT DIP GALVANIZED IN ACCORDANCE WITH SUBSECTION 506.15.
BOLTS AND WASHERS SHALL BE MECHANICALLY GALVANIZED IN ACCORDANCE WITH ASTM B695, CLASS 55.

WORK THIS DWG. WITH DWG. 7AC & 7BC

REV.	DATE	REMARKS	DWN	CHK	APVL	SHOP
0						

MATERIAL:	SURFACE PREP. & PAINT:	HOLES:	SHOP BOLTS:
M270-50 (UN)	SEE DWG. GN1	15/16ø	AS NOTED

DESCRIPTION: BOTTOM CHORD ASSEMBLY (SOUTH TRUSS - SPAN 2)

CASCO BAY STEEL STRUCTURES, INC.
1 WALLACE AVE. SOUTH PORTLAND, ME 04106
PHONE (207) 780-6722 FAX. (207) 780-6726
TENSOR 3285

STRUCTURE: TH-10 OVER OTTER CREEK PONY TRUSS BRIDGE	DRAWN: RB	DATE: 12/17/15	
	CHKD: WJL	DATE: 1/14/16	
LOCATION: RUTLAND CITY, VERMONT	JOB NO. 598	DWG NO. 7C	
PROJ NO. BRF 3000 (19)			
CUSTOMER: KUBRICKY CONSTRUCTION CORP.		REV. △	

RB Fri, Jan 22, 2016 08:38:39 AM c:\users\jobs\3285\7C.dwg

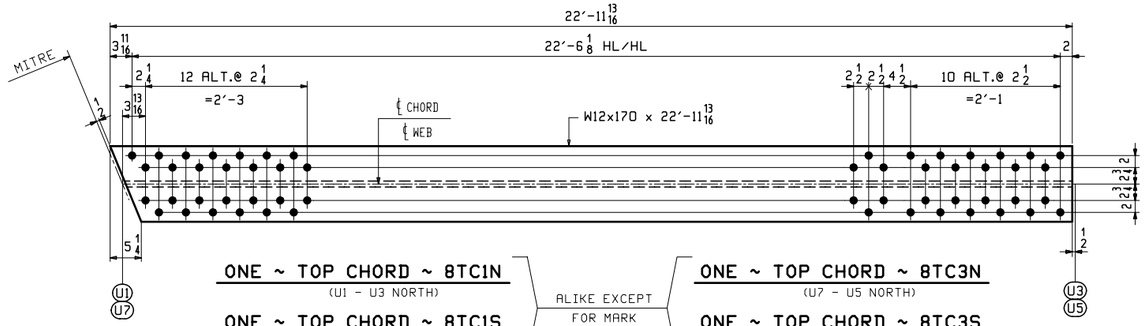

ONE ~ TOP CHORD ~ 8TC1N (U1 - U3 NORTH)

ONE ~ TOP CHORD ~ 8TC1S (U1 - U3 SOUTH)

ALIKE EXCEPT FOR MARK

ONE ~ TOP CHORD ~ 8TC3N (U7 - U5 NORTH)

ONE ~ TOP CHORD ~ 8TC3S (U7 - U5 SOUTH)

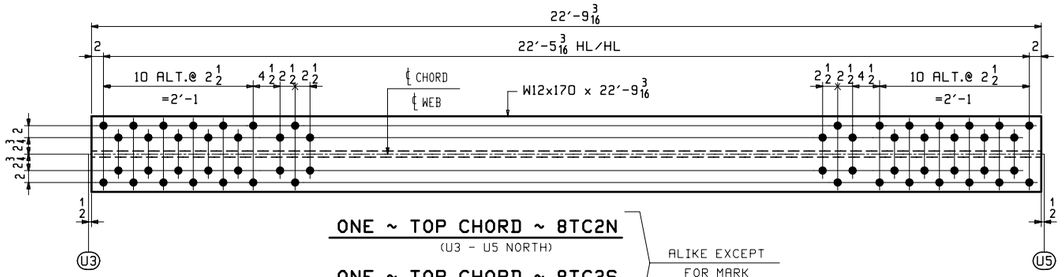

ONE ~ TOP CHORD ~ 8TC2N (U3 - U5 NORTH)

ONE ~ TOP CHORD ~ 8TC2S (U3 - U5 SOUTH)

ALIKE EXCEPT FOR MARK

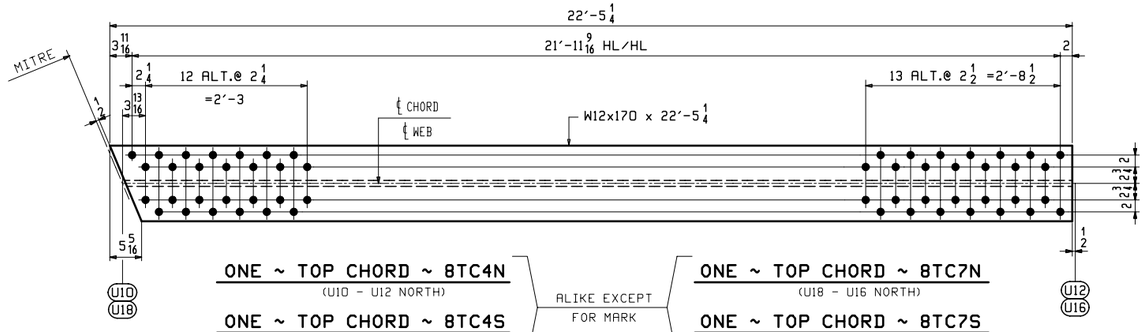

ONE ~ TOP CHORD ~ 8TC4N (U10 - U12 NORTH)

ONE ~ TOP CHORD ~ 8TC4S (U10 - U12 SOUTH)

ALIKE EXCEPT FOR MARK

ONE ~ TOP CHORD ~ 8TC7N (U18 - U16 NORTH)

ONE ~ TOP CHORD ~ 8TC7S (U18 - U16 SOUTH)

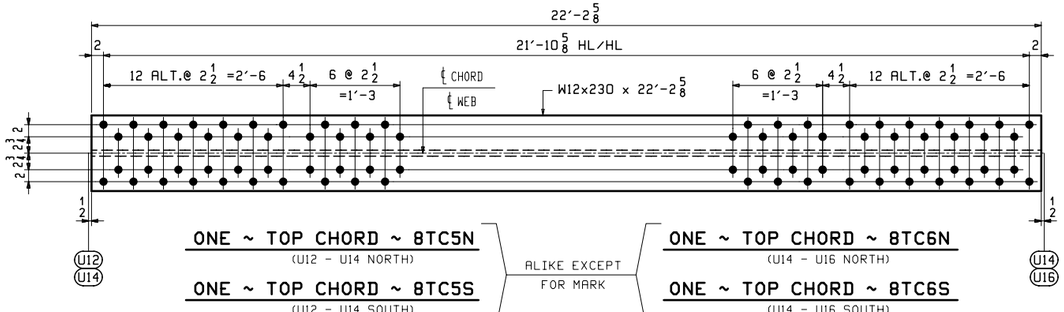

ONE ~ TOP CHORD ~ 8TC5N (U12 - U14 NORTH)

ONE ~ TOP CHORD ~ 8TC5S (U12 - U14 SOUTH)

ALIKE EXCEPT FOR MARK

ONE ~ TOP CHORD ~ 8TC6N (U14 - U16 NORTH)

ONE ~ TOP CHORD ~ 8TC6S (U14 - U16 SOUTH)

SHOP NOTE:

DO NOT SHIP FROM THIS DRAWING

ABM INFO		SHIP	BILL OF MATERIAL					JOB NO.	DRAWING NO.	REV.
								598	8	
PAGE	LINE	MARK	QTY	MARK	MATERIAL	LENGTH FT	LENGTH INCHES	REMARKS	WT	PROCUREMENT NOTES
					TOP CHORDS					
1	P	8TC1N	1		W 12x170	22	11 13/16	GALV, ALIKE EXCEPT FOR MARK M270-50T2 (CVN)	3907	
1	P	8TC1S	1		W 12x170	22	11 13/16	GALV. M270-50T2 (CVN)	3907	
1	P	8TC3N	1		W 12x170	22	11 13/16	GALV. M270-50T2 (CVN)	3907	
1	P	8TC3S	1		W 12x170	22	11 13/16	GALV. M270-50T2 (CVN)	3907	
1	P	8TC2N	1		W 12x170	22	9 3/16	GALV, ALIKE EXCEPT FOR MARK M270-50T2 (CVN)	3870	
1	P	8TC2S	1		W 12x170	22	9 3/16	GALV. M270-50T2 (CVN)	3870	
1	Q	8TC4N	1		W 12x170	22	5 1/4	GALV, ALIKE EXCEPT FOR MARK M270-50T2 (CVN)	3814	
1	Q	8TC4S	1		W 12x170	22	5 1/4	GALV. M270-50T2 (CVN)	3814	
1	Q	8TC7N	1		W 12x170	22	5 1/4	GALV. M270-50T2 (CVN)	3814	
1	Q	8TC7S	1		W 12x170	22	5 1/4	GALV. M270-50T2 (CVN)	3814	
1	R	8TC5N	1		W 12x230	22	2 5/8	GALV, ALIKE EXCEPT FOR MARK M270-50T2 (CVN)	5110	
1	R	8TC5S	1		W 12x230	22	2 5/8	GALV. M270-50T2 (CVN)	5110	
1	R	8TC6N	1		W 12x230	22	2 5/8	GALV. M270-50T2 (CVN)	5110	
1	R	8TC6S	1		W 12x230	22	2 5/8	GALV. M270-50T2 (CVN)	5110	

SHOP NOTE "G"

ALL STEEL SHALL BE HOT DIP GALVANIZED IN ACCORDANCE WITH SUBSECTION 506.15.

SHOP NOTE "H"

HOLES IN BOTH FLANGES OF EACH TOP CHORD BEAM ARE ALIKE.

NOTES:
1. FOR GENERAL NOTES SEE DWG. GN1.
2. CVN - DENOTES MATERIAL SUBJECT TO CHARPY V-NOTCH TESTING.

REV.	DATE	REMARKS	DWN	CHK	APVL	SHOP
0						

MATERIAL:	SURFACE PREP. & PAINT:	HOLES:	SHOP BOLTS:
M270-50	HOT-DIP GALV.	15/16ø	NONE

DESCRIPTION: TOP CHORDS

CASCO BAY STEEL STRUCTURES, INC.
1 WALLACE AVE. SOUTH PORTLAND, ME 04106
PHONE (207) 780-6722 FAX. (207) 780-6726
TENSOR 3285

STRUCTURE:	TH-10 OVER OTTER CREEK PONY TRUSS BRIDGE	DRAWN: RB	DATE: 12/18/15
		CHKD: WJL	DATE: 1/15/16
LOCATION:	RUTLAND CITY, VERMONT	JOB NO.	DWG NO.
PROJ NO.	BRF 3000 (19)	598	8
CUSTOMER:	KUBRICKY CONSTRUCTION CORP.		REV. △

WJL Thu, Jan 21, 2016 04:18:35 PM C:\Users\jobs\3285\8.1 Rev0

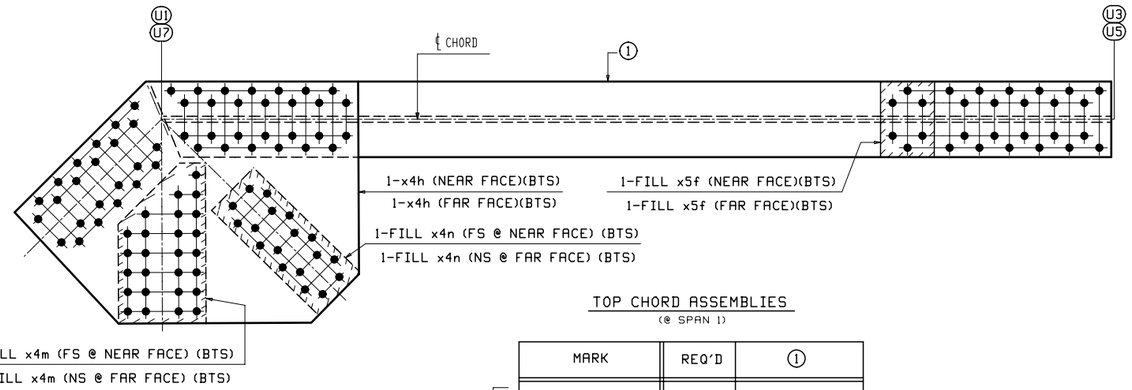

TOP CHORD ASSEMBLIES
(@ SPAN 1)

MARK	REQ'D	①	
9U1U3N	ONE	8TC1N	(U1 - U3 NORTH)(LOOKING NORTH)
9U1U3S	ONE	8TC1S	(U1 - U3 SOUTH)(LOOKING NORTH)
9U7U5N	ONE	8TC3N	(U7 - U5 NORTH)(LOOKING SOUTH)
9U7U5S	ONE	8TC3S	(U7 - U5 SOUTH)(LOOKING SOUTH)

ALIKE EXCEPT FOR MARK

9U1U3N, 9U1U3S, 9U7U5N & 9U7U5S ARE ALIKE EXCEPT FOR MARK

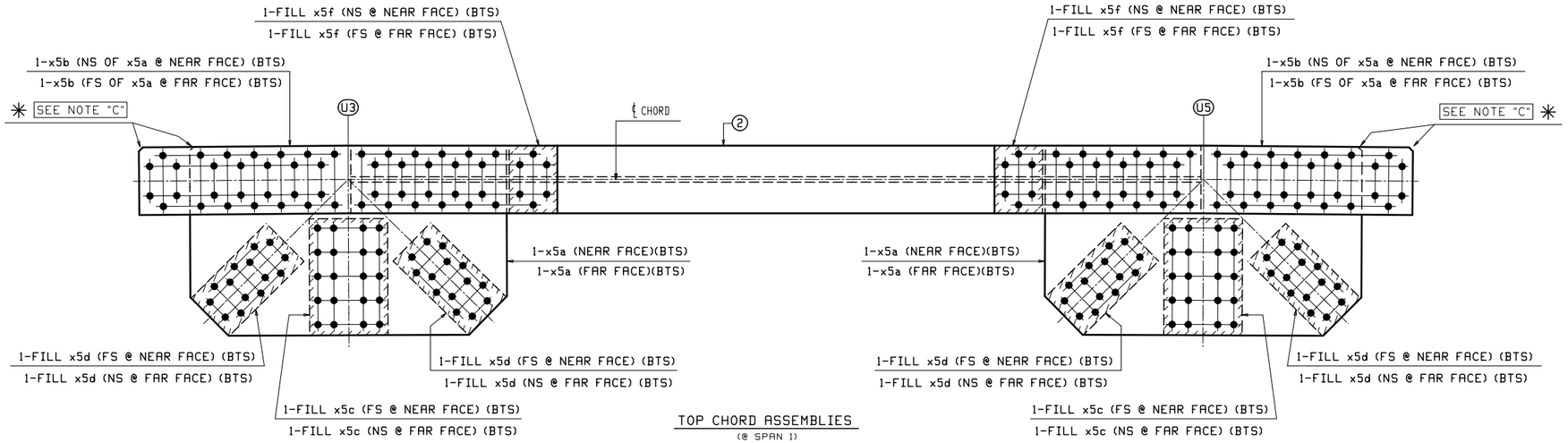

TOP CHORD ASSEMBLIES
(@ SPAN 1)

MARK	REQ'D	②	
9U3U5N	ONE	8TC2N	(U3 - U5 NORTH)(LOOKING NORTH)
9U3U5S	ONE	8TC2S	(U3 - U5 SOUTH)(LOOKING NORTH)

ALIKE EXCEPT FOR MARK

9U3U5N & 9U3U5S ARE ALIKE EXCEPT FOR MARK

✳ SHOP NOTE "C"

FOR PLATE ORIENTATION PLACE CLIP TOWARDS SIDE SHOWN.

SHOP NOTE "G"

ALL STEEL (EXCEPT FOR BOLTS) SHALL BE HOT DIP GALVANIZED IN ACCORDANCE WITH SUBSECTION 506.15.

NOTES:
1. FOR GENERAL NOTES SEE DWG. GN1.
2. FOR STANDARD DETAILS SEE DWG. X4 & X5.
3. FOR SUB-ASSEMBLY DETAILS SEE DWG. 8.
4. BTS DENOTES BOLT TO SHIP OR SECURE FOR SHIPMENT.

BILL OF MATERIAL

ABM INFO PAGE	ABM INFO LINE	SHIP MARK	QTY	MARK	MATERIAL	LENGTH FT	LENGTH INCHES	REMARKS	WT	PROCUREMENT NOTES
		9U1U3N	1		TOP CHORD ASS'Y			SEE NOTE "G"	5648	
			1	8TC1N	TOP CHORD			SEE DWG. 8	3907	
3	B		2	x4h	PL 1 1/4 x 40 3/8	4	9 7/16	M270-50F2 (FCM)	822	
3	C		2	x4m	PL 7GA x 14 5/8	2	2 3/4	FILL A1011-50	20	
3	D		2	x4n	PL 16GA x 10	2	1	FILL A1011-50	4	
3	H		2	x5f	PL 3/4 x 9	1	0 5/8	FILL	24	
		9U1U3S	1		TOP CHORD ASS'Y			SEE NOTE "G"	5648	
			1	8TC1S	TOP CHORD			SEE DWG. 8	3907	
3	B		2	x4h	PL 1 1/4 x 40 3/8	4	9 7/16	M270-50F2 (FCM)	822	
3	C		2	x4m	PL 7GA x 14 5/8	2	2 3/4	FILL A1011-50	20	
3	D		2	x4n	PL 16GA x 10	2	1	FILL A1011-50	4	
3	H		2	x5f	PL 3/4 x 9	1	0 5/8	FILL	24	
		9U7U5N	1		TOP CHORD ASS'Y			SEE NOTE "G"	5648	
			1	8TC3N	TOP CHORD			SEE DWG. 8	3907	
3	B		2	x4h	PL 1 1/4 x 40 3/8	4	9 7/16	M270-50F2 (FCM)	822	
3	C		2	x4m	PL 7GA x 14 5/8	2	2 3/4	FILL A1011-50	20	
3	D		2	x4n	PL 16GA x 10	2	1	FILL A1011-50	4	
3	H		2	x5f	PL 3/4 x 9	1	0 5/8	FILL	24	
		9U7U5S	1		TOP CHORD ASS'Y			SEE NOTE "G"	5648	
			1	8TC3S	TOP CHORD			SEE DWG. 8	3907	
3	B		2	x4h	PL 1 1/4 x 40 3/8	4	9 7/16	M270-50F2 (FCM)	822	
3	C		2	x4m	PL 7GA x 14 5/8	2	2 3/4	FILL A1011-50	20	
3	D		2	x4n	PL 16GA x 10	2	1	FILL A1011-50	4	
3	H		2	x5f	PL 3/4 x 9	1	0 5/8	FILL	24	
		9U3U5N	1		TOP CHORD ASS'Y			SEE NOTE "G"	6694	
			1	8TC2N	TOP CHORD			SEE DWG. 8	3870	
3	F		4	x5a	PL 3/4 x 35 5/16	4	11	M270-50F2 (FCM)	443	
3	G		4	x5b	PL 3/4 x 13	6	6 1/16	M270-50T2	216	
3	J		4	x5c	PL 7GA x 14 5/8	1	9 3/4	FILL A1011-50	16	
3	K		8	x5d	PL 16GA x 10	1	7 3/4	FILL A1011-50	3	
3	H		4	x5f	PL 3/4 x 9	1	0 5/8	FILL	24	
		9U3U5S	1		TOP CHORD ASS'Y			SEE NOTE "G"	6694	
			1	8TC2S	TOP CHORD			SEE DWG. 8	3870	
3	F		4	x5a	PL 3/4 x 35 5/16	4	11	M270-50F2 (FCM)	443	
3	G		4	x5b	PL 3/4 x 13	6	6 1/16	M270-50T2	216	
3	J		4	x5c	PL 7GA x 14 5/8	1	9 3/4	FILL A1011-50	16	
3	K		8	x5d	PL 16GA x 10	1	7 3/4	FILL A1011-50	3	
3	H		4	x5f	PL 3/4 x 9	1	0 5/8	FILL	24	

REV.	DATE	REMARKS	DWN	CHK	APVL	SHOP
0						

MATERIAL:	SURFACE PREP. & PAINT:	HOLES:	SHOP BOLTS:
M270-50 (UN)	SEE DWG. GN1	15/16Ø	NONE

DESCRIPTION: TOP CHORD ASSEMBLIES (SPAN 1)

CASCO BAY STEEL STRUCTURES, INC.
1 WALLACE AVE. SOUTH PORTLAND, ME 04106
PHONE (207) 780-6722 FAX. (207) 780-6726
TENSOR 3285

STRUCTURE: TH-10 OVER OTTER CREEK PONY TRUSS BRIDGE	DRAWN: RB	DATE: 12/18/15	
	CHKD: WJL	DATE: 1/15/16	
LOCATION: RUTLAND CITY, VERMONT	JOB NO. 598	DWG NO. 9	
PROJ NO. BRF 3000 (19)			
CUSTOMER: KUBRICKY CONSTRUCTION CORP.		REV. △	

RB Fri, Jan 22, 2016 10:02:39 AM c:\users\jobs\2585\9.dwg

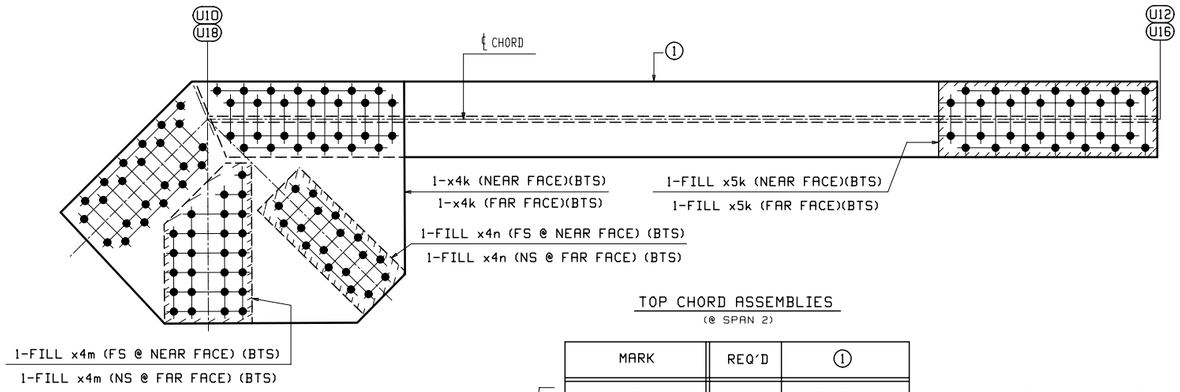

TOP CHORD ASSEMBLIES
(@ SPAN 2)

MARK	REQ'D	①	
1OU1OU12N	ONE	8TC4N	(U1O - U12 NORTH)(LOOKING NORTH)
1OU1OU12S	ONE	8TC4S	(U1O - U12 SOUTH)(LOOKING NORTH)
1OU18U16N	ONE	8TC7N	(U18 - U16 NORTH)(LOOKING SOUTH)
1OU18U16S	ONE	8TC7S	(U18 - U16 SOUTH)(LOOKING SOUTH)

ALIKE EXCEPT FOR MARK

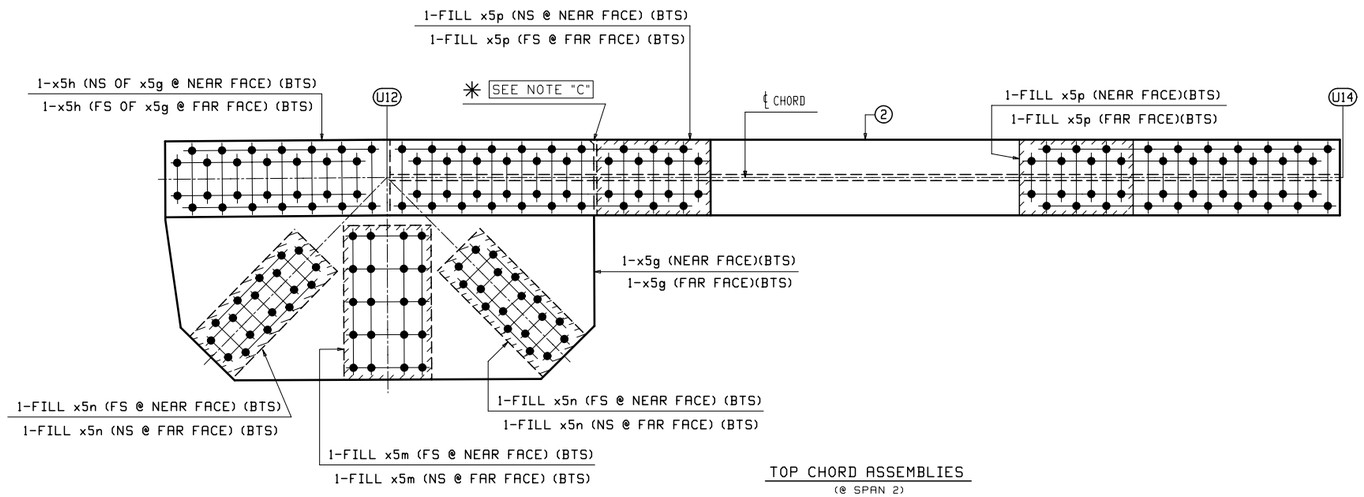

TOP CHORD ASSEMBLIES
(@ SPAN 2)

MARK	REQ'D	②	
1OU12U14N	ONE	8TC5N	(U12 - U14 NORTH)(LOOKING NORTH)
1OU12U14S	ONE	8TC5S	(U12 - U14 SOUTH)(LOOKING NORTH)

ALIKE EXCEPT FOR MARK

✳ SHOP NOTE "C"

FOR PLATE ORIENTATION PLACE CLIP TOWARDS SIDE SHOWN.

SHOP NOTE "G"

ALL STEEL (EXCEPT FOR BOLTS) SHALL BE HOT DIP GALVANIZED IN ACCORDANCE WITH SUBSECTION 506.15.

NOTES:
1. FOR GENERAL NOTES SEE DWG. GN1.
2. FOR STANDARD DETAILS SEE DWG. X4 & X5.
3. FOR SUB-ASSEMBLY DETAILS SEE DWG. 8.
4. BTS DENOTES BOLT TO SHIP OR SECURE FOR SHIPMENT.

BILL OF MATERIAL

JOB NO. 598 | DRAWING NO. 10 | REV.

1OU1OU12N, 1OU1OU12S, 1OU18U16N & 1OU18U16S ARE ALIKE EXCEPT FOR MARK

ABM INFO PAGE	ABM INFO LINE	SHIP MARK	QTY	MARK	MATERIAL	LENGTH FT	LENGTH INCHES	REMARKS	WT	PROCUREMENT NOTES
		1OU1OU12N	1		TOP CHORD ASS'Y			SEE NOTE "G"	5632	
			1	8TC4N	TOP CHORD			SEE DWG. 8	3814	
3	B		2	x4k	PL 1 1/4 x 40 3/8	4	9 1/4	M270-50F2 (FCM)	819	
3	C		2	x4m	PL 7GA x 14 5/8	2	2 3/4	FILL A1011-50	20	
3	D		2	x4n	PL 16GA x 10	2	1	FILL A1011-50	4	
3	R		2	x5k	PL 1/2 x 12 5/8	3	0 1/2	FILL	65	
		1OU1OU12S	1		TOP CHORD ASS'Y			SEE NOTE "G"	5632	
			1	8TC4S	TOP CHORD			SEE DWG. 8	3814	
3	B		2	x4k	PL 1 1/4 x 40 3/8	4	9 1/4	M270-50F2 (FCM)	819	
3	C		2	x4m	PL 7GA x 14 5/8	2	2 3/4	FILL A1011-50	20	
3	D		2	x4n	PL 16GA x 10	2	1	FILL A1011-50	4	
3	R		2	x5k	PL 1/2 x 12 5/8	3	0 1/2	FILL	65	
		1OU18U16N	1		TOP CHORD ASS'Y			SEE NOTE "G"	5632	
			1	8TC7N	TOP CHORD			SEE DWG. 8	3814	
3	B		2	x4k	PL 1 1/4 x 40 3/8	4	9 1/4	M270-50F2 (FCM)	819	
3	C		2	x4m	PL 7GA x 14 5/8	2	2 3/4	FILL A1011-50	20	
3	D		2	x4n	PL 16GA x 10	2	1	FILL A1011-50	4	
3	R		2	x5k	PL 1/2 x 12 5/8	3	0 1/2	FILL	65	
		1OU18U16S	1		TOP CHORD ASS'Y			SEE NOTE "G"	5632	
			1	8TC7S	TOP CHORD			SEE DWG. 8	3814	
3	B		2	x4k	PL 1 1/4 x 40 3/8	4	9 1/4	M270-50F2 (FCM)	819	
3	C		2	x4m	PL 7GA x 14 5/8	2	2 3/4	FILL A1011-50	20	
3	D		2	x4n	PL 16GA x 10	2	1	FILL A1011-50	4	
3	R		2	x5k	PL 1/2 x 12 5/8	3	0 1/2	FILL	65	

1OU12U14N & 1OU12U14S ARE ALIKE EXCEPT FOR MARK

ABM INFO PAGE	ABM INFO LINE	SHIP MARK	QTY	MARK	MATERIAL	LENGTH FT	LENGTH INCHES	REMARKS	WT	PROCUREMENT NOTES
		1OU12U14N	1		TOP CHORD ASS'Y			SEE NOTE "G"	7341	
			1	8TC5N	TOP CHORD			SEE DWG. 8	5110	
3	M		2	x5g	PL 3/4 x 39 9/16	5	11 1/2	M270-50F2 (FCM)	602	
3	N		2	x5h	PL 3/4 x 13 1/4	7	7 1/16	M270-50T2	257	
3	S		2	x5m	PL 11/16 x 14 5/8	2	1 3/4	FILL	73	
3	T		4	x5n	PL 9/16 x 10	2	1	FILL	40	
3	Q		4	x5p	PL 3/4 x 12 7/8	1	7	FILL	52	
		1OU12U14S	1		TOP CHORD ASS'Y			SEE NOTE "G"	7341	
			1	8TC5S	TOP CHORD			SEE DWG. 8	5110	
3	M		2	x5g	PL 3/4 x 39 9/16	5	11 1/2	M270-50F2 (FCM)	602	
3	N		2	x5h	PL 3/4 x 13 1/4	7	7 1/16	M270-50T2	257	
3	S		2	x5m	PL 11/16 x 14 5/8	2	1 3/4	FILL	73	
3	T		4	x5n	PL 9/16 x 10	2	1	FILL	40	
3	Q		4	x5p	PL 3/4 x 12 7/8	1	7	FILL	52	

REV.	DATE	REMARKS	DWN	CHK	APVL	SHOP
0						

MATERIAL:	SURFACE PREP. & PAINT:	HOLES:	SHOP BOLTS:
M270-50 (UN)	SEE DWG. GN1	15/16Ø	NONE

DESCRIPTION: TOP CHORD ASSEMBLIES (SPAN 2)

CASCO BAY STEEL STRUCTURES, INC.
1 WALLACE AVE. PHONE (207) 780-6722
SOUTH PORTLAND, ME 04106 FAX. (207) 780-6726
TENSOR 3285

STRUCTURE: TH-10 OVER OTTER CREEK PONY TRUSS BRIDGE	DRAWN: RB	DATE: 12/18/15	
	CHK'D: WJL	DATE: 1/15/16	
LOCATION: RUTLAND CITY, VERMONT	JOB NO. 598	DWG NO. 10	
PROJ NO. BRF 3000 (19)		REV. △	
CUSTOMER: KUBRICKY CONSTRUCTION CORP.			

Fri, Jan 22, 2016 10:19:02 AM J:\work\jobs\3285\10 - Rev0

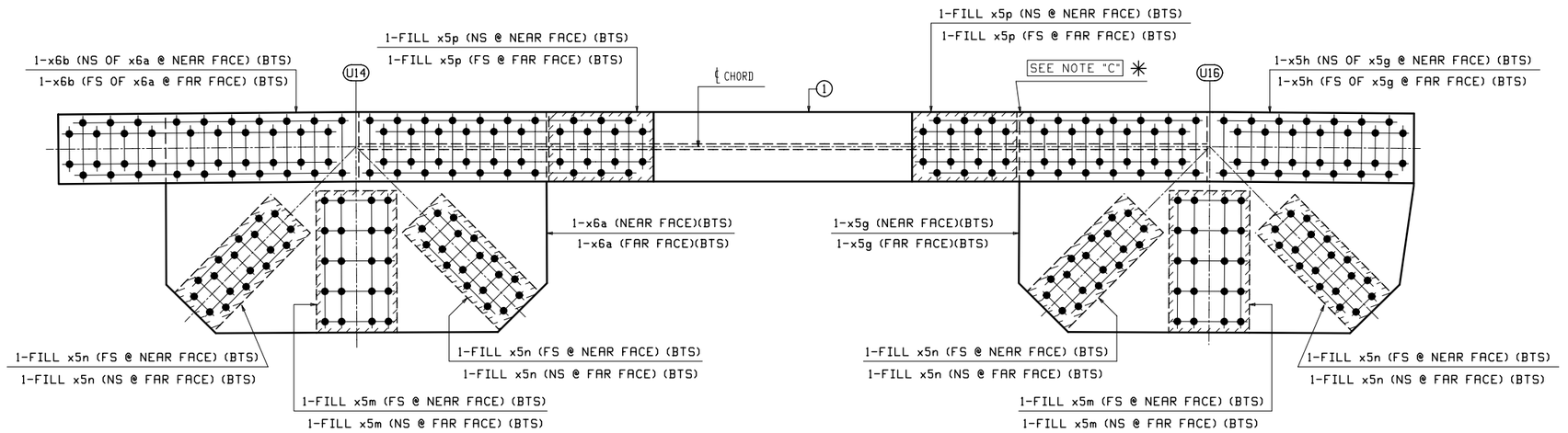

TOP CHORD ASSEMBLIES
(@ SPAN 2)

	MARK	REQ'D	①	
ALIKE EXCEPT FOR MARK	**11U14U16N**	ONE	**8TC6N**	(U14 - U16 NORTH)(LOOKING NORTH)
	11U14U16S	ONE	**8TC6S**	(U14 - U16 SOUTH)(LOOKING NORTH)

✳ SHOP NOTE "C"

FOR PLATE ORIENTATION PLACE CLIP TOWARDS SIDE SHOWN.

SHOP NOTE "G"

ALL STEEL (EXCEPT FOR BOLTS) SHALL BE HOT DIP GALVANIZED IN ACCORDANCE WITH SUBSECTION 506.15.

NOTES:
1. FOR GENERAL NOTES SEE DWG. GN1.
2. FOR STANDARD DETAILS SEE DWG. X5 & X6.
3. FOR SUB-ASSEMBLY DETAILS SEE DWG. 8.
4. BTS DENOTES BOLT TO SHIP OR SECURE FOR SHIPMENT.

11U14U16N & 11U14U16S ARE ALIKE EXCEPT FOR MARK

BILL OF MATERIAL

ABM INFO PAGE	ABM INFO LINE	SHIP MARK	QTY	MARK	MATERIAL	LENGTH FT	LENGTH INCHES	REMARKS	WT	PROCUREMENT NOTES
		11U14U16N	1		TOP CHORD ASS'Y			SEE NOTE "G"	9632	
			1	8TC6N	TOP CHORD			SEE DWG. 8	5110	
3	M		2	x5g	PL $\frac{3}{4}$x39$\frac{9}{16}$	5	11$\frac{1}{2}$	M270-50F2 (FCM)	602	
3	N		2	x5h	PL $\frac{3}{4}$x13$\frac{1}{4}$	7	7$\frac{1}{16}$	M270-50T2	257	
3	S		4	x5m	PL $\frac{11}{16}$x14$\frac{5}{8}$	2	1$\frac{3}{4}$	FILL	73	
3	T		8	x5n	PL $\frac{9}{16}$x10	2	1	FILL	40	
3	Q		4	x5p	PL $\frac{3}{4}$x12$\frac{7}{8}$	1	7	FILL	52	
3	M		2	x6a	PL $\frac{3}{4}$x39$\frac{9}{16}$	5	9	M270-50F2 (FCM)	581	
3	P		2	x6b	PL 1x13$\frac{7}{16}$	9	0$\frac{1}{16}$	M270-50T2	412	
		11U14U16S	1		TOP CHORD ASS'Y			SEE NOTE "G"	9632	
			1	8TC6S	TOP CHORD			SEE DWG. 8	5110	
3	M		2	x5g	PL $\frac{3}{4}$x39$\frac{9}{16}$	5	11$\frac{1}{2}$	M270-50F2 (FCM)	602	
3	N		2	x5h	PL $\frac{3}{4}$x13$\frac{1}{4}$	7	7$\frac{1}{16}$	M270-50T2	257	
3	S		4	x5m	PL $\frac{11}{16}$x14$\frac{5}{8}$	2	1$\frac{3}{4}$	FILL	73	
3	T		8	x5n	PL $\frac{9}{16}$x10	2	1	FILL	40	
3	Q		4	x5p	PL $\frac{3}{4}$x12$\frac{7}{8}$	1	7	FILL	52	
3	M		2	x6a	PL $\frac{3}{4}$x39$\frac{9}{16}$	5	9	M270-50F2 (FCM)	581	
3	P		2	x6b	PL 1x13$\frac{7}{16}$	9	0$\frac{1}{16}$	M270-50T2	412	

JOB NO. 598 | DRAWING NO. 11 | REV.

REV.	DATE	REMARKS	DWN	CHK	APVL	SHOP
0						

MATERIAL:	SURFACE PREP. & PAINT:	HOLES:	SHOP BOLTS:
M270-50 (UN)	SEE DWG. GN1	$\frac{15}{16}$ø	NONE

DESCRIPTION: TOP CHORD ASSEMBLIES (SPAN 2)

CASCO BAY STEEL STRUCTURES, INC.
1 WALLACE AVE. SOUTH PORTLAND, ME 04106
PHONE (207) 780-6722 FAX. (207) 780-6726
TENSOR 3285

STRUCTURE:	DRAWN:	DATE:
TH-10 OVER OTTER CREEK PONY TRUSS BRIDGE	RB	12/18/15
	CHKD: WJL	DATE: 1/15/16
LOCATION: RUTLAND CITY, VERMONT	JOB NO.	DWG NO.
PROJ NO. BRF 3000 (19)	598	11
CUSTOMER: KUBRICKY CONSTRUCTION CORP.		REV. △

RB Fri, Jan 22, 2016 10:10:26 AM C:\users\rbb\3285\11.dwg

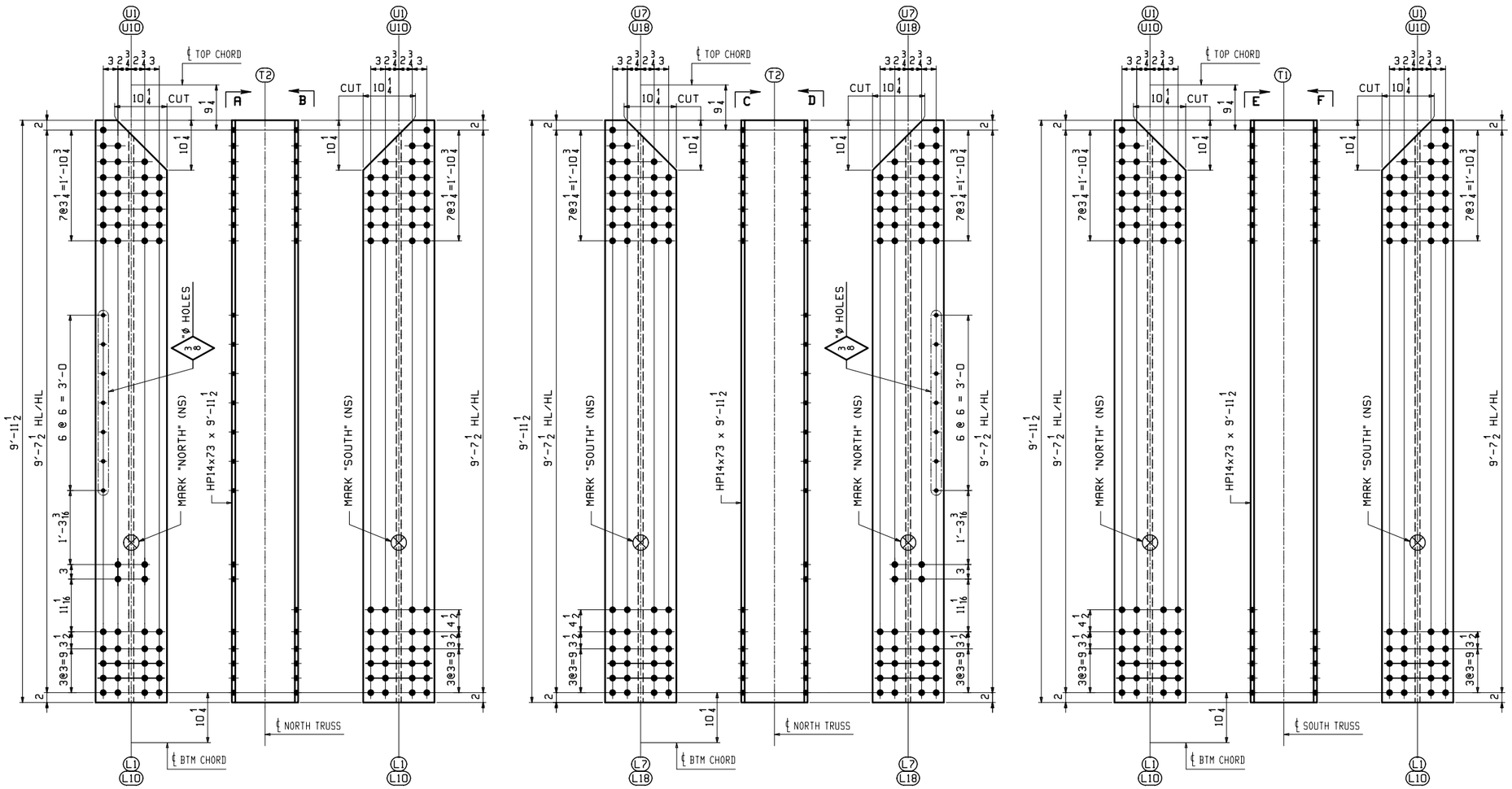

VIEW -A
(OUTER NORTH FACE)

VIEW -B
(INSIDE SOUTH FACE)

VIEW -C
(INSIDE SOUTH FACE)

VIEW -D
(OUTER NORTH FACE)

VIEW -E
(INSIDE NORTH FACE)

VIEW -F
(OUTER SOUTH FACE)

ONE ~ VERTICAL ~ 12V1N
(L1 - U1 NORTH)

ONE ~ VERTICAL ~ 12V10N
(L10 - U10 NORTH)

ALIKE EXCEPT FOR MARK

ONE ~ VERTICAL ~ 12V7N
(L7 - U7 NORTH)

ONE ~ VERTICAL ~ 12V18N
(L18 - U18 NORTH)

ALIKE EXCEPT FOR MARK

ONE ~ VERTICAL ~ 12V1S
(L1 - U1 SOUTH)

ONE ~ VERTICAL ~ 12V10S
(L10 - U10 SOUTH)

ALIKE EXCEPT FOR MARK

NOTES:
1. FOR GENERAL NOTES SEE DWG. GN1.
2. FCM - DENOTES FRACTURE CRITICAL MATERIAL.

ABM INFO		SHIP	BILL OF MATERIAL					JOB NO.	DRAWING NO.	REV.
								598	12	
PAGE	LINE	MARK	QTY	MARK	MATERIAL	LENGTH FT	LENGTH INCHES	REMARKS	WT	PROCUREMENT NOTES
					VERTICALS					
1	J	12V1N	1		HP 14x73	9	11 1/2	GALV. ALIKE EXCEPT FOR MARK M270-50F2 (FCM)	727	
1	J	12V10N	1		HP 14x73	9	11 1/2	GALV. M270-50F2 (FCM)	727	
1	J	12V7N	1		HP 14x73	9	11 1/2	GALV. ALIKE EXCEPT FOR MARK M270-50F2 (FCM)	727	
1	J	12V18N	1		HP 14x73	9	11 1/2	GALV. M270-50F2 (FCM)	727	
1	J	12V1S	1		HP 14x73	9	11 1/2	GALV. ALIKE EXCEPT FOR MARK M270-50F2 (FCM)	727	
1	J	12V10S	1		HP 14x73	9	11 1/2	GALV. M270-50F2 (FCM)	727	

SHOP NOTE "G"

ALL STEEL SHALL BE HOT DIP GALVANIZED IN ACCORDANCE WITH SUBSECTION 506.15.

REV.	DATE	REMARKS	DWN	CHK	APVL	SHOP
0						

MATERIAL:	SURFACE PREP. & PAINT:	HOLES:	SHOP BOLTS:
M270-50	SEE DWG. GN1	15/16 ø (UN)	NONE

DESCRIPTION: TRUSS VERTICALS

CASCO BAY STEEL STRUCTURES, INC.
1 WALLACE AVE. SOUTH PORTLAND, ME 04106
PHONE (207) 780-6722 FAX. (207) 780-6726
TENSOR 3285

STRUCTURE:	TH-10 OVER OTTER CREEK PONY TRUSS BRIDGE	DRAWN: RB	DATE: 12/18/15
		CHKD: WJL	DATE: 1/15/16
LOCATION:	RUTLAND CITY, VERMONT	JOB NO.	DWG NO.
PROJ NO.	BRF 3000 (19)	598	12
CUSTOMER:	KUBRICKY CONSTRUCTION CORP.		REV. △

WJL Thu, Jan 21, 2016 04:23:07 PM /users/jobs/3285/12 : Rev0

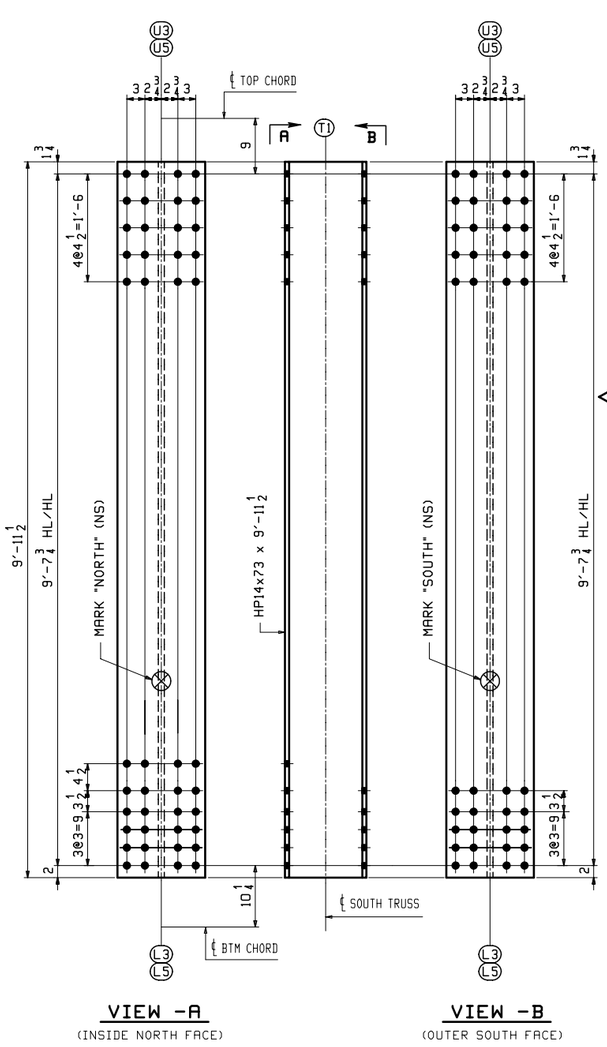

VIEW -A

(INSIDE NORTH FACE)

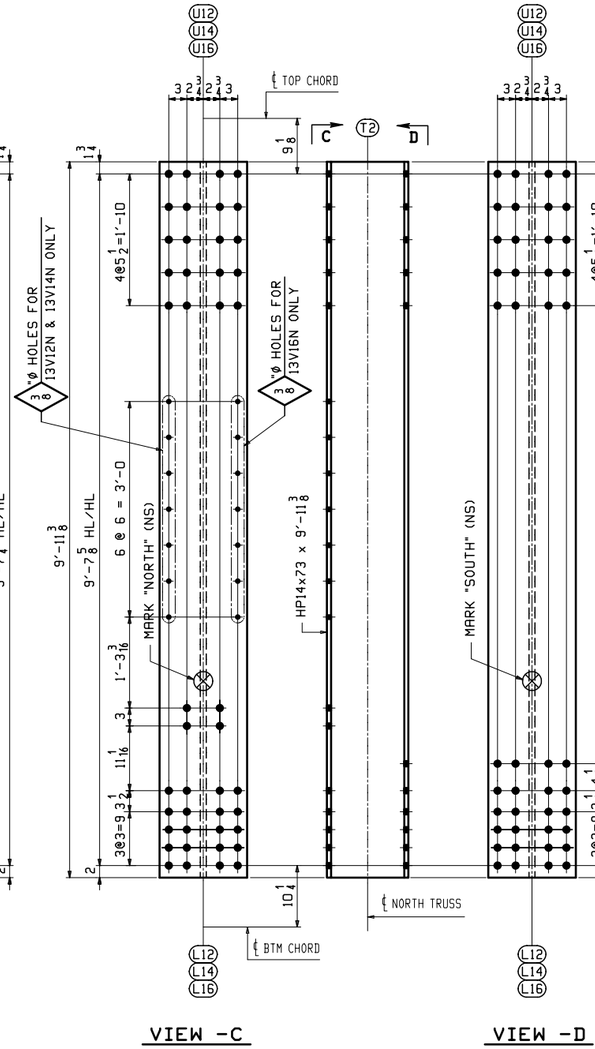

VIEW -B

(OUTER SOUTH FACE)

ONE ~ VERTICAL ~ 13V3S
(L3 - U3 SOUTH)

ONE ~ VERTICAL ~ 13V5S
(L5 - U5 SOUTH)

ALIKE EXCEPT FOR MARK

VIEW -C

(OUTER NORTH FACE)

VIEW -D

(INSIDE SOUTH FACE)

ONE ~ VERTICAL ~ 13V12N
(L12 - U12 NORTH)

ONE ~ VERTICAL ~ 13V14N
(L14 - U14 NORTH)

ALIKE EXCEPT FOR MARK

ONE ~ VERTICAL ~ 13V16N (AS NOTED)
(L16 - U16 NORTH)

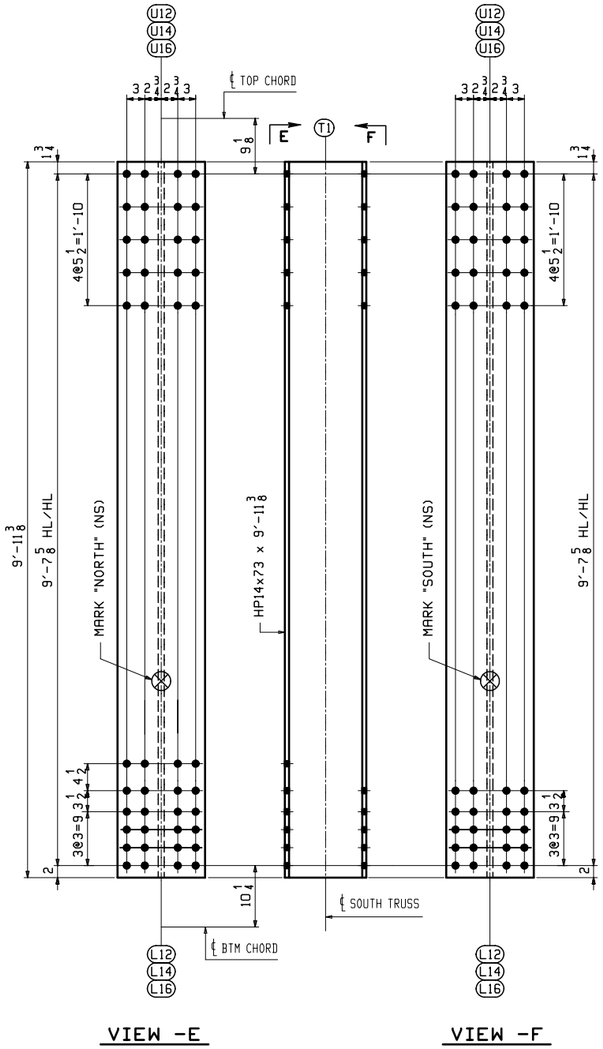

VIEW -E

(INSIDE NORTH FACE)

VIEW -F

(OUTER SOUTH FACE)

ONE ~ VERTICAL ~ 13V12S
(L12 - U12 SOUTH)

ONE ~ VERTICAL ~ 13V14S
(L14 - U14 SOUTH)

ONE ~ VERTICAL ~ 13V16S
(L16 - U16 SOUTH)

ALIKE EXCEPT FOR MARK

NOTES:
1. FOR GENERAL NOTES SEE DWG. GN1.
2. FCM - DENOTES FRACTURE CRITICAL MATERIAL.

SHOP NOTE "G"

ALL STEEL SHALL BE HOT DIP GALVANIZED IN ACCORDANCE WITH SUBSECTION 506.15.

BILL OF MATERIAL

ABM INFO PAGE	ABM INFO LINE	SHIP MARK	QTY	MARK	MATERIAL	LENGTH FT	LENGTH INCHES	REMARKS	WT	PROCUREMENT NOTES
					VERTICALS					
1	J	13V3S	1		HP 14x73	9	11 1/2	GALV. ALIKE EXCEPT FOR MARK M270-50F2 (FCM)	727	
1	J	13V5S	1		HP 14x73	9	11 1/2	GALV. M270-50F2 (FCM)	727	
1	J	13V12N	1		HP 14x73	9	11 3/8	GALV. ALIKE EXCEPT FOR MARK M270-50F2 (FCM)	726	
1	J	13V14N	1		HP 14x73	9	11 3/8	GALV. M270-50F2 (FCM)	726	
1	J	13V16N	1		HP 14x73	9	11 3/8	GALV. M270-50F2 (FCM)	726	
1	J	13V12S	1		HP 14x73	9	11 3/8	GALV. ALIKE EXCEPT FOR MARK M270-50F2 (FCM)	726	
1	J	13V14S	1		HP 14x73	9	11 3/8	GALV. M270-50F2 (FCM)	726	
1	J	13V16S	1		HP 14x73	9	11 3/8	GALV. M270-50F2 (FCM)	726	

JOB NO. 598 | DRAWING NO. 13 | REV.

REV.	DATE	REMARKS	DWN	CHK	APVL	SHOP
0						

MATERIAL:	SURFACE PREP. & PAINT:	HOLES:	SHOP BOLTS:
M270-50	SEE DWG. GN1	15/16 Ø (UN)	NONE

DESCRIPTION: TRUSS VERTICALS

CASCO BAY STEEL STRUCTURES, INC.
1 WALLACE AVE. SOUTH PORTLAND, ME 04106
PHONE (207) 780-6722 FAX. (207) 780-6726
TENSOR 3285

STRUCTURE: TH-10 OVER OTTER CREEK PONY TRUSS BRIDGE	DRAWN: RB	DATE: 12/19/15	
	CHKD: WJL	DATE: 1/15/16	
LOCATION: RUTLAND CITY, VERMONT	JOB NO.	DWG NO.	
PROJ NO. BRF 3000 (19)	598	13	
CUSTOMER: KUBRICKY CONSTRUCTION CORP.		REV. △	

WJL Thu, Jan 21, 2016 04:23:47 PM c:\work\jobs\2015\13 - Rev0

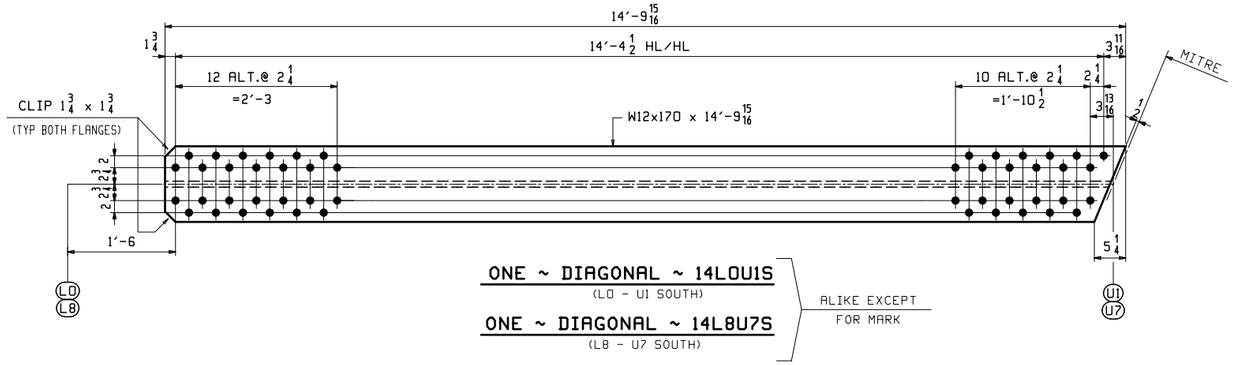

ABM INFO		SHIP	BILL OF MATERIAL					JOB NO.	DRAWING NO.	REV.
								598	14	
PAGE	LINE	MARK	QTY	MARK	MATERIAL	LENGTH FT	LENGTH INCHES	REMARKS	WT	PROCUREMENT NOTES
					DIAGONALS					
1	L	14L0U1S	1		W 12x170	14	9 15/16	GALV. ALIKE EXCEPT FOR MARK M270-50T2 (CVN)	2521	
1	L	14L8U7S	1		W 12x170	14	9 15/16	GALV. M270-50T2 (CVN)	2521	
1	M	14L9U10S	1		W 12x170	14	7 5/8	GALV. ALIKE EXCEPT FOR MARK M270-50T2 (CVN)	2488	
1	M	14L19U18S	1		W 12x170	14	7 5/8	GALV. M270-50T2 (CVN)	2488	

SHOP NOTE "G"

ALL STEEL SHALL BE HOT DIP GALVANIZED IN ACCORDANCE WITH SUBSECTION 506.15.

SHOP NOTE "H"

HOLES IN BOTH FLANGES OF EACH DIAGONAL BEAM ARE ALIKE.

NOTES:
1. FOR GENERAL NOTES SEE DWG. GN1.
2. CVN - DENOTES MATERIAL SUBJECT TO CHARPY V-NOTCH TESTING.

REV.	DATE	REMARKS	DWN	CHK	APVL	SHOP
0						

MATERIAL:	SURFACE PREP. & PAINT:	HOLES:	SHOP BOLTS:
M270-50	SEE DWG. GN1	15/16 Ø	NONE

DESCRIPTION: TRUSS DIAGONALS

CASCO BAY STEEL STRUCTURES, INC.
1 WALLACE AVE.
SOUTH PORTLAND, ME 04106
PHONE (207) 780-6722
FAX. (207) 780-6726
TENSOR 3285

STRUCTURE:	TH-10 OVER OTTER CREEK PONY TRUSS BRIDGE	DRAWN: RB	DATE: 12/19/15
		CHKD: WJL	DATE: 1/15/16
LOCATION:	RUTLAND CITY, VERMONT	JOB NO.	DWG NO.
PROJ NO.	BRF 3000 (19)	598	14
CUSTOMER:	KUBRICKY CONSTRUCTION CORP.		REV. △

WJL Thu, Jan 21, 2016 04:24:26 PM /users/jobs/3285/14 : Rev0

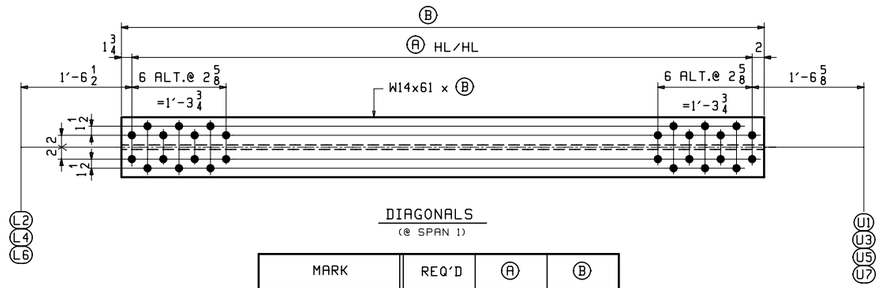

DIAGONALS
(@ SPAN 1)

MARK	REQ'D	Ⓐ	Ⓑ	
15L2U1N	ONE	12'-10 13/16	13'-2 9/16	(L2 - U1 NORTH)
15L2U1S	ONE			(L2 - U1 SOUTH)
15L6U7N	ONE			(L6 - U7 NORTH)
15L6U7S	ONE			(L6 - U7 SOUTH)
15L2U3N	ONE	12'-10 7/8	13'-2 5/8	(L2 - U3 NORTH)
15L2U3S	ONE			(L2 - U3 SOUTH)
15L4U3N	ONE			(L4 - U3 NORTH)
15L4U3S	ONE			(L4 - U3 SOUTH)
15L4U5N	ONE			(L4 - U5 NORTH)
15L4U5S	ONE			(L4 - U5 SOUTH)
15L6U5N	ONE			(L6 - U5 NORTH)
15L6U5S	ONE			(L6 - U5 SOUTH)

ALIKE EXCEPT FOR MARK

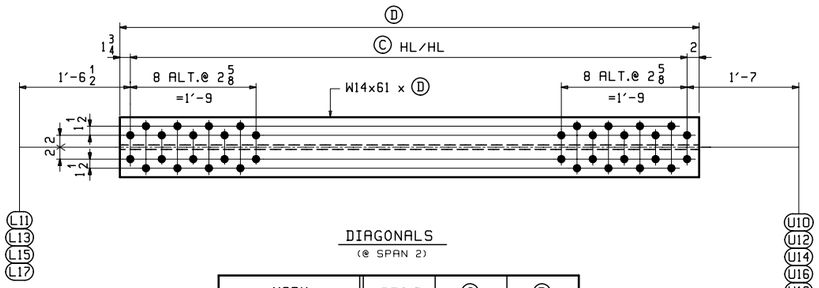

DIAGONALS
(@ SPAN 2)

MARK	REQ'D	Ⓒ	Ⓓ	
15L11U10N	ONE	12'-8 1/16	12'-11 13/16	(L11 - U10 NORTH)
15L11U10S	ONE			(L11 - U10 SOUTH)
15L17U18N	ONE			(L17 - U18 NORTH)
15L17U18S	ONE			(L17 - U18 SOUTH)
15L11U12N	ONE	12'-8 1/4	13'-0	(L11 - U12 NORTH)
15L11U12S	ONE			(L11 - U12 SOUTH)
15L17U16N	ONE			(L17 - U16 NORTH)
15L17U16S	ONE			(L17 - U16 SOUTH)
15L13U12N	ONE	12'-8 1/8	12'-11 7/8	(L13 - U12 NORTH)
15L13U12S	ONE			(L13 - U12 SOUTH)
15L15U16N	ONE			(L15 - U16 NORTH)
15L15U16S	ONE			(L15 - U16 SOUTH)
15L13U14N	ONE	12'-8 3/16	12'-11 15/16	(L13 - U14 NORTH)
15L13U14S	ONE			(L13 - U14 SOUTH)
15L15U14N	ONE			(L15 - U14 NORTH)
15L15U14S	ONE			(L15 - U14 SOUTH)

ALIKE EXCEPT FOR MARK

SHOP NOTE "G"

ALL STEEL SHALL BE HOT DIP GALVANIZED IN ACCORDANCE WITH SUBSECTION 506.15.

SHOP NOTE "H"

HOLES IN BOTH FLANGES OF EACH DIAGONAL BEAM ARE ALIKE.

NOTES:
1. FOR GENERAL NOTES SEE DWG. GN1.
2. FCM - DENOTES FRACTURE CRITICAL MATERIAL.

BILL OF MATERIAL

JOB NO. 598 | DRAWING NO. 15 | REV.

ABM INFO PAGE	ABM INFO LINE	SHIP MARK	QTY	MARK	MATERIAL	LENGTH FT	LENGTH INCHES	REMARKS	WT	PROCUREMENT NOTES
					DIAGONALS					
1	F	15L2U1N	1		W 14x61	13	2 9/16	GALV. ALIKE EXCEPT FOR MARK M270-50F2 (FCM)	806	
1	F	15L2U1S	1		W 14x61	13	2 9/16	GALV. M270-50F2 (FCM)	806	
1	F	15L6U7N	1		W 14x61	13	2 9/16	GALV. M270-50F2 (FCM)	806	
1	F	15L6U7S	1		W 14x61	13	2 9/16	GALV. M270-50F2 2 (FCM)	806	
1	F	15L2U3N	1		W 14x61	13	2 5/8	GALV. ALIKE EXCEPT FOR MARK M270-50F2 (FCM)	806	
1	F	15L2U3S	1		W 14x61	13	2 5/8	GALV. M270-50F2 (FCM)	806	
1	F	15L4U3N	1		W 14x61	13	2 5/8	GALV. M270-50F2 (FCM)	806	
1	F	15L4U3S	1		W 14x61	13	2 5/8	GALV. M270-50F2 (FCM)	806	
1	F	15L4U5N	1		W 14x61	13	2 5/8	GALV. M270-50F2 (FCM)	806	
1	F	15L4U5S	1		W 14x61	13	2 5/8	GALV. M270-50F2 (FCM)	806	
1	F	15L6U5N	1		W 14x61	13	2 5/8	GALV. M270-50F2 (FCM)	806	
1	F	15L6U5S	1		W 14x61	13	2 5/8	GALV. M270-50F2 2 (FCM)	806	
1	G	15L11U10N	1		W 14x61	12	11 13/16	GALV. ALIKE EXCEPT FOR MARK M270-50F2 (FCM)	792	
1	G	15L11U10S	1		W 14x61	12	11 13/16	GALV. M270-50F2 (FCM)	792	
1	G	15L17U18N	1		W 14x61	12	11 13/16	GALV. M270-50F2 (FCM)	792	
1	G	15L17U18S	1		W 14x61	12	11 13/16	GALV. M270-50F2 2 (FCM)	792	
1	G	15L11U12N	1		W 14x61	13	0	GALV. ALIKE EXCEPT FOR MARK M270-50F2 (FCM)	793	
1	G	15L11U12S	1		W 14x61	13	0	GALV. M270-50F2 (FCM)	793	
1	G	15L17U16N	1		W 14x61	13	0	GALV. M270-50F2 (FCM)	793	
1	G	15L17U16S	1		W 14x61	13	0	GALV. M270-50F2 2 (FCM)	793	
1	G	15L13U12N	1		W 14x61	12	11 7/8	GALV. ALIKE EXCEPT FOR MARK M270-50F2 (FCM)	792	
1	G	15L13U12S	1		W 14x61	12	11 7/8	GALV. M270-50F2 (FCM)	792	
1	G	15L15U16N	1		W 14x61	12	11 7/8	GALV. M270-50F2 (FCM)	792	
1	G	15L15U16S	1		W 14x61	12	11 7/8	GALV. M270-50F2 2 (FCM)	792	
1	G	15L13U14N	1		W 14x61	12	11 15/16	GALV. ALIKE EXCEPT FOR MARK M270-50F2 (FCM)	793	
1	G	15L13U14S	1		W 14x61	12	11 15/16	GALV. M270-50F2 (FCM)	793	
1	G	15L15U14N	1		W 14x61	12	11 15/16	GALV. M270-50F2 (FCM)	793	
1	G	15L15U14S	1		W 14x61	12	11 15/16	GALV. M270-50F2 2 (FCM)	793	

REV.	DATE	REMARKS	DWN	CHK	APVL	SHOP
0						

MATERIAL:	SURFACE PREP. & PAINT:	HOLES:	SHOP BOLTS:
M270-50	SEE DWG. GN1	15/16 Ø	NONE

DESCRIPTION: TRUSS DIAGONALS

CASCO BAY STEEL STRUCTURES, INC.
1 WALLACE AVE. SOUTH PORTLAND, ME 04106
PHONE (207) 780-6722 FAX. (207) 780-6726
TENSOR 3285

STRUCTURE: TH-10 OVER OTTER CREEK PONY TRUSS BRIDGE	DRAWN: RB	DATE: 12/21/15	
	CHKD: WJL	DATE: 1/15/16	
LOCATION: RUTLAND CITY, VERMONT	JOB NO. 598	DWG NO. 15	
PROJ NO. BRF 3000 (19)			
CUSTOMER: KUBRICKY CONSTRUCTION CORP.		REV. △	

WJL Thu, Jan 21, 2016 04:04:47 PM c:\users\john\3285\15 - Rev.0

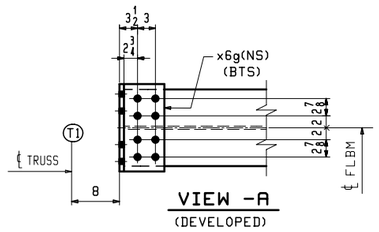

VIEW -A
(DEVELOPED)

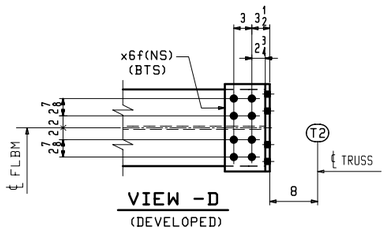

VIEW -D
(DEVELOPED)

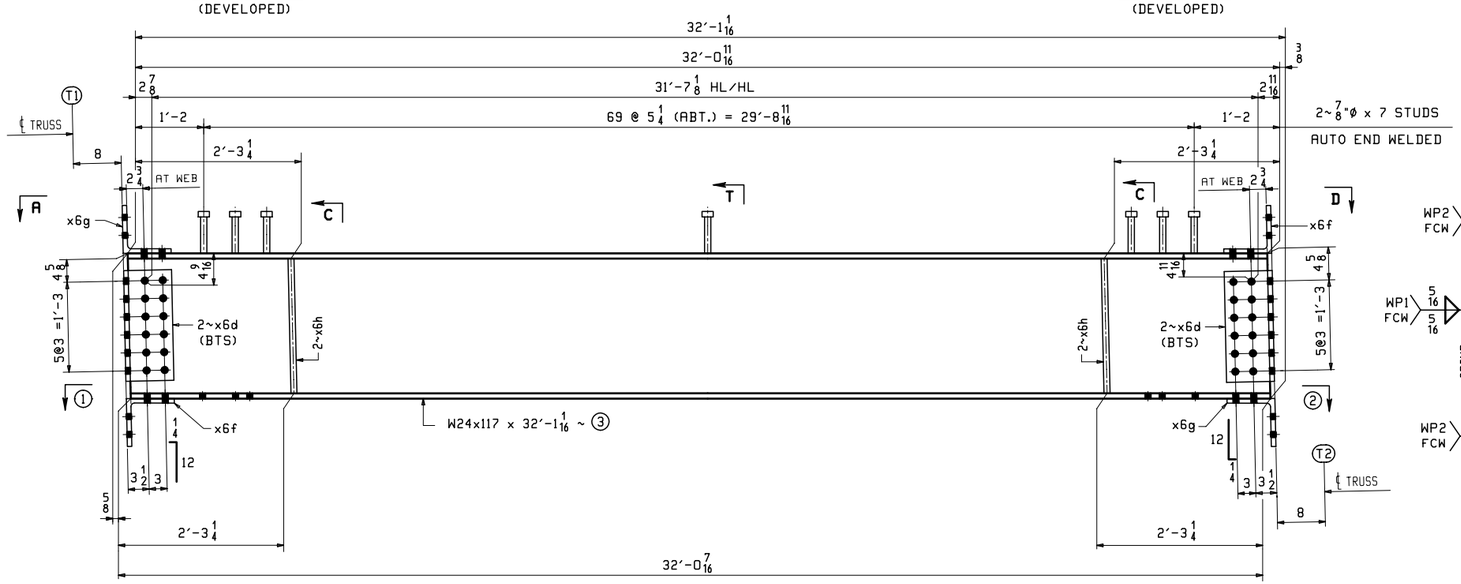

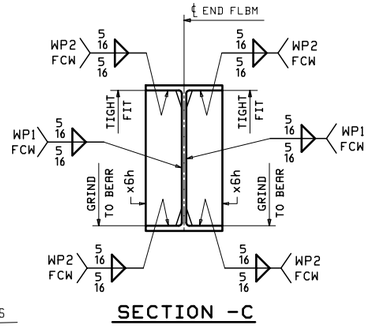

SECTION -C

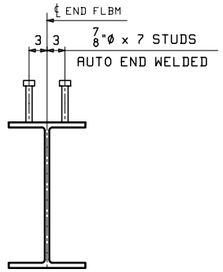

SECTION -T
(TYPICAL SECTION WITH STUDS)

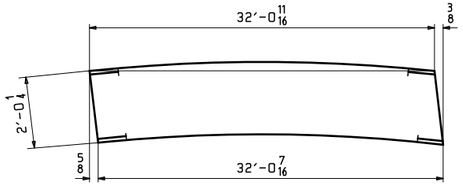

ORIENTATION DIAGRAM
(SEE DWG. C1)

SHOP NOTE "G"

ALL STEEL SHALL BE HOT DIP GALVANIZED IN ACCORDANCE WITH SUBSECTION 506.15.

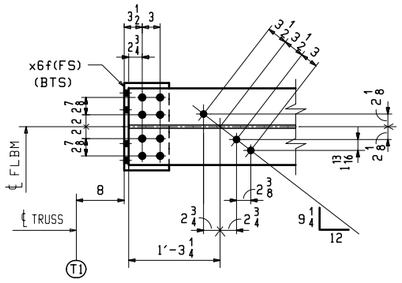

SECTION -B1
(DEVELOPED)

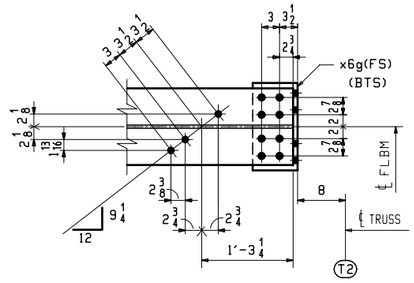

SECTION -E1
(DEVELOPED)

FLOORBEAM

(END FLOORBEAM - LOOKING WEST)

MARK	REQ'D	SECT.- ①	SECT.- ②	③
(@ LO) 16FBO	ONE	B1	E1	a16
(@ L8) 16FB8	ONE	B2	E2	b16

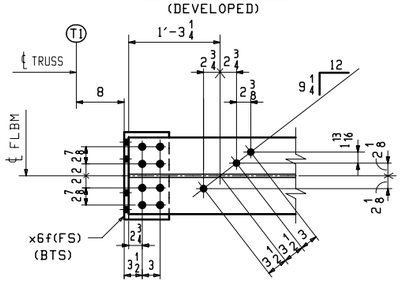

SECTION -B2
(DEVELOPED)

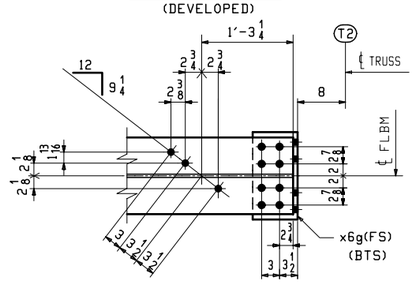

SECTION -E2
(DEVELOPED)

NOTES:
1. FOR GENERAL NOTES SEE DWG. GN1.
2. FOR STANDARD DETAILS SEE DWG. X6.
3. BTS DENOTES BOLT TO SHIP OR SECURE FOR SHIPMENT.
4. FCW DENOTES FRACTURE CRITICAL WELD.
5. GIE DENOTES GRINDING AT ONE END OF PLATE.

BILL OF MATERIAL

ABM INFO PAGE	ABM INFO LINE	SHIP MARK	QTY	MARK	MATERIAL	LENGTH FT	LENGTH INCHES	REMARKS	WT	PROCUREMENT NOTES
		16FBO	1		FLOORBEAM			SEE NOTE "G"	4428	
1	Y		1	a16	W 24x117	32	1 1/16	M270-50F2 (FCM)	3754	
4	E		4	x6d	L 8x7x 3/4	1	6 1/2	CUT FROM L8x8x3/4 M270-50F2 (FCM)	56	
4	D		2	x6f	L 8x8x 3/4	1	2 1/2	BENT M270-50F2 (FCM)	47	
4	D		2	x6g	L 8x8x 3/4	1	2 1/2	BENT M270-50F2 (FCM)	47	
4	F		4	x6h	PL 1/2x6	1	10 1/2	GIE M270-50T2	19	
6	E		140		STUD ⅞ ø	0	7	A108	1	
		16FB8	1		FLOORBEAM			SEE NOTE "G"	4428	
1	Y		1	b16	W 24x117	32	1 1/16	M270-50F2 (FCM)	3754	
4	E		4	x6d	L 8x7x 3/4	1	6 1/2	CUT FROM L8x8x3/4 M270-50F2 (FCM)	56	
4	D		2	x6f	L 8x8x 3/4	1	2 1/2	BENT M270-50F2 (FCM)	47	
4	D		2	x6g	L 8x8x 3/4	1	2 1/2	BENT M270-50F2 (FCM)	47	
4	F		4	x6h	PL 1/2x6	1	10 1/2	GIE M270-50T2	19	
6	E		140		STUD ⅞ ø	0	7	A108	1	

REV.	DATE	REMARKS	DWN	CHK	APVL	SHOP
0						

MATERIAL:	SURFACE PREP. & PAINT:	HOLES:	SHOP BOLTS:
M270-50 (UN)	SEE DWG. GN1	15/16ø	NONE

DESCRIPTION: FLOORBEAM DETAILS

CASCO BAY STEEL STRUCTURES, INC.
1 WALLACE AVE. SOUTH PORTLAND, ME 04106
PHONE (207) 780-6722 FAX. (207) 780-6726

STRUCTURE: TH-10 OVER OTTER CREEK PONY TRUSS BRIDGE	DRAWN: RB	DATE: 12/21/15	
	CHKD: WJL	DATE: 1/15/16	
LOCATION: RUTLAND CITY, VERMONT	JOB NO. 598	DWG NO. 16	
PROJ NO. BRF 3000 (19)			
CUSTOMER: KUBRICKY CONSTRUCTION CORP.		REV. △	

JOB NO. 598 | DRAWING NO. 16 | REV.

WJL Thu, Jan 21, 2016 04:25:29 PM //users/pbw/2016/16_Rev0

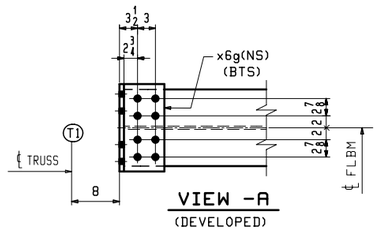

VIEW -A
(DEVELOPED)

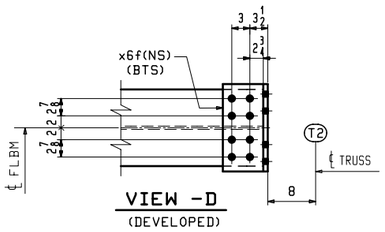

VIEW -D
(DEVELOPED)

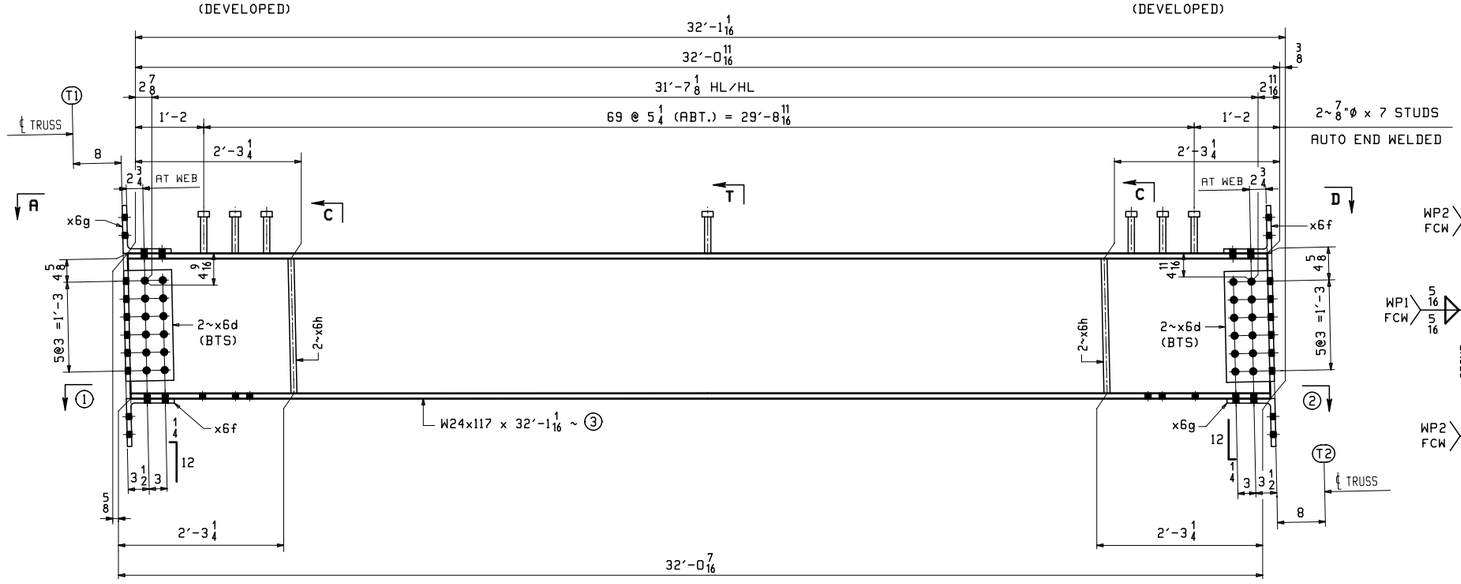

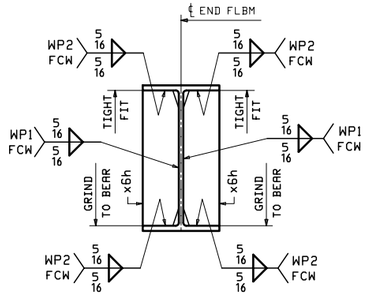

SECTION -C

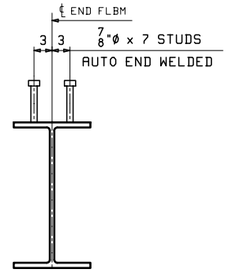

SECTION -T
(TYPICAL SECTION WITH STUDS)

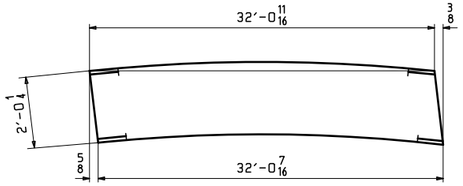

ORIENTATION DIAGRAM
(SEE DWG. C1)

SHOP NOTE "G"

ALL STEEL SHALL BE HOT DIP GALVANIZED IN ACCORDANCE WITH SUBSECTION 506.15.

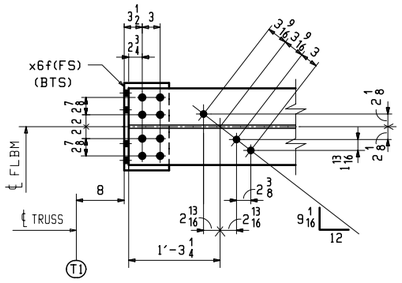

SECTION -B1
(DEVELOPED)

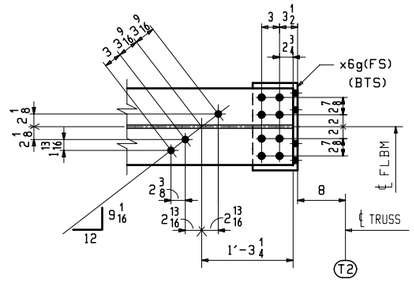

SECTION -E1
(DEVELOPED)

FLOORBEAM
(END FLOORBEAM - LOOKING WEST)

	MARK	REQ'D	SECT.- ①	SECT.- ②	③
(@ L9)	17FB9	ONE	B1	E1	a17
(@ L19)	17FB19	ONE	B2	E2	b17

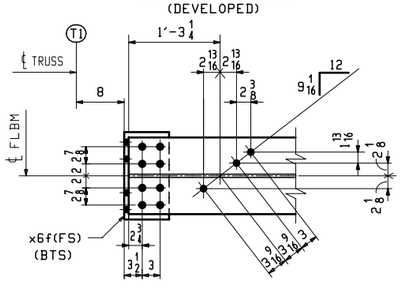

SECTION -B2
(DEVELOPED)

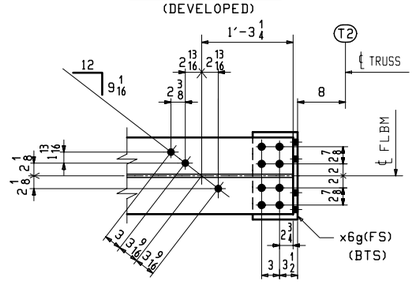

SECTION -E2
(DEVELOPED)

NOTES:
1. FOR GENERAL NOTES SEE DWG. GN1.
2. FOR STANDARD DETAILS SEE DWG. X6.
3. BTS DENOTES BOLT TO SHIP OR SECURE FOR SHIPMENT.
4. FCW DENOTES FRACTURE CRITICAL WELD.
5. GIE DENOTES GRINDING AT ONE END OF PLATE.

ABM INFO PAGE	ABM INFO LINE	SHIP MARK	QTY	MARK	MATERIAL	LENGTH FT	LENGTH INCHES	REMARKS	WT	PROCUREMENT NOTES
		17FB9	1		FLOORBEAM			SEE NOTE "G"	4428	
1	Y		1	a17	W 24x117	32	1 1/16	M270-50F2 (FCM)	3754	
4	E		4	x6d	L 8x7x 3/4	1	6 1/2	CUT FROM L8x8x3/4 M270-50F2 (FCM)	56	
4	D		2	x6f	L 8x8x 3/4	1	2 1/2	BENT M270-50F2 (FCM)	47	
4	D		2	x6g	L 8x8x 3/4	1	2 1/2	BENT M270-50F2 (FCM)	47	
4	F		4	x6h	PL 1/2x6	1	10 1/2	GIE M270-50T2	19	
6	E		140		STUD ⅞ ø	0	7	A108	1	
		17FB19	1		FLOORBEAM			SEE NOTE "G"	4428	
1	Y		1	b17	W 24x117	32	1 1/16	M270-50F2 (FCM)	3754	
4	E		4	x6d	L 8x7x 3/4	1	6 1/2	CUT FROM L8x8x3/4 M270-50F2 (FCM)	56	
4	D		2	x6f	L 8x8x 3/4	1	2 1/2	BENT M270-50F2 (FCM)	47	
4	D		2	x6g	L 8x8x 3/4	1	2 1/2	BENT M270-50F2 (FCM)	47	
4	F		4	x6h	PL 1/2x6	1	10 1/2	GIE M270-50T2	19	
6	E		140		STUD ⅞ ø	0	7	A108	1	

REV.	DATE	REMARKS	DWN	CHK	APVL	SHOP
0						

MATERIAL:	SURFACE PREP. & PAINT:	HOLES:	SHOP BOLTS:
M270-50 (UN)	SEE DWG. GN1	15/16ø	NONE

DESCRIPTION: FLOORBEAM DETAILS

CASCO BAY STEEL STRUCTURES, INC.
1 WALLACE AVE. SOUTH PORTLAND, ME 04106
PHONE (207) 780-6722 FAX. (207) 780-6726

STRUCTURE:	TH-10 OVER OTTER CREEK PONY TRUSS BRIDGE	DRAWN: RB	DATE: 12/21/15
		CHKD: WJL	DATE: 1/15/16
LOCATION:	RUTLAND CITY, VERMONT	JOB NO.	DWG NO.
PROJ NO.	BRF 3000 (19)	598	17
CUSTOMER:	KUBRICKY CONSTRUCTION CORP.		REV. △

WJL Thu, Jan 21, 2016 04:27:21 PM //users/pbw/2015/17-Rev0

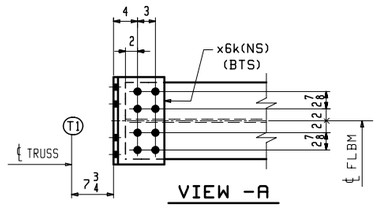

VIEW -A
(DEVELOPED)

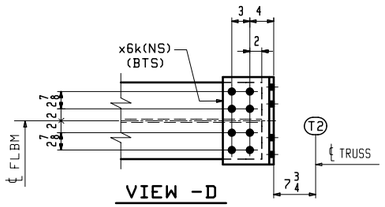

VIEW -D
(DEVELOPED)

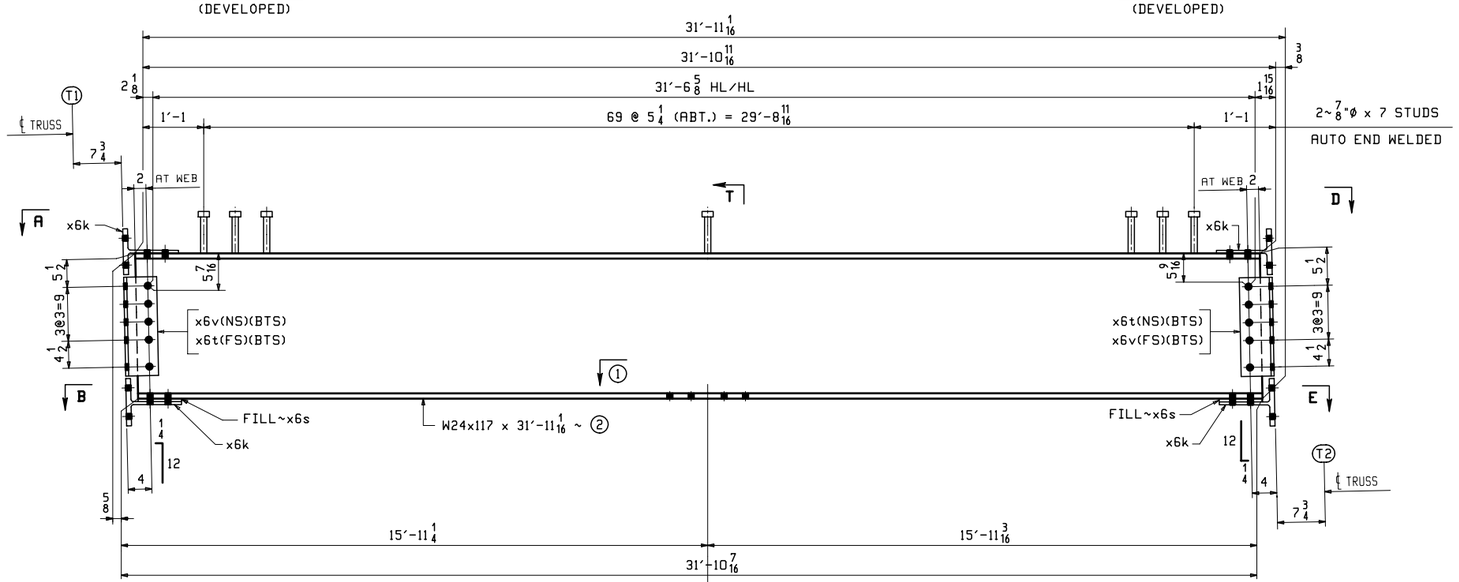

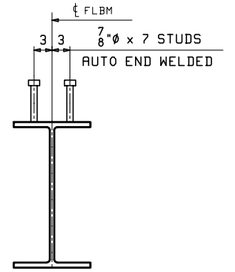

SECTION -T
(TYPICAL SECTION WITH STUDS)

ABM INFO		SHIP	BILL OF MATERIAL					JOB NO.	DRAWING NO.		REV.
								598	18		
PAGE	LINE	MARK	QTY	MARK	MATERIAL	LENGTH FT	LENGTH INCHES	REMARKS	WT	PROCUREMENT NOTES	
		18FB1	1		FLOORBEAM			SEE NOTE "G" ALIKE EXCEPT FOR MARK	4195		
		18FB7	1		FLOORBEAM			SEE NOTE "G"	4195		
1	Y		2	a18	W 24x117	31	11 1/16	M270-50F2 (FCM)	3735		
4	H		8	x6k	WT 9x35.5	1	2 5/8	BENT M270-50F2 (FCM)	43		
4	K		4	x6t	L 6x4x1/2	1	4 1/2	M270-50F2 (FCM)	22		
4	K		4	x6v	L 6x4x1/2	1	4 1/2	M270-50F2 (FCM)	22		
4	L		4	x6s	PL 1/4x7 1/4	1	0 3/4	FILL	7		
6	E		280		STUD 7/8 ø	0	7	A108	1		
		18FB10	1		FLOORBEAM			SEE NOTE "G" ALIKE EXCEPT FOR MARK	4195		
		18FB18	1		FLOORBEAM			SEE NOTE "G"	4195		
1	Y		2	b18	W 24x117	31	11 1/16	M270-50F2 (FCM)	3735		
4	H		8	x6k	WT 9x35.5	1	2 5/8	BENT M270-50F2 (FCM)	43		
4	K		4	x6t	L 6x4x1/2	1	4 1/2	M270-50F2 (FCM)	22		
4	K		4	x6v	L 6x4x1/2	1	4 1/2	M270-50F2 (FCM)	22		
4	L		4	x6s	PL 1/4x7 1/4	1	0 3/4	FILL	7		
6	E		280		STUD 7/8 ø	0	7	A108	1		

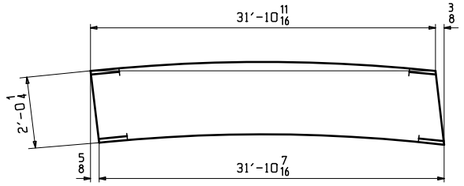

ORIENTATION DIAGRAM
(SEE DWG. C1)

SHOP NOTE "G"

ALL STEEL SHALL BE HOT DIP GALVANIZED IN ACCORDANCE WITH SUBSECTION 506.15.

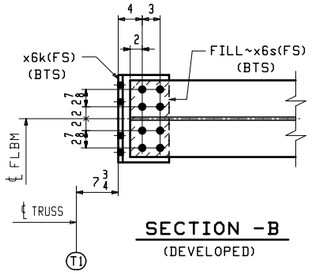

SECTION -B
(DEVELOPED)

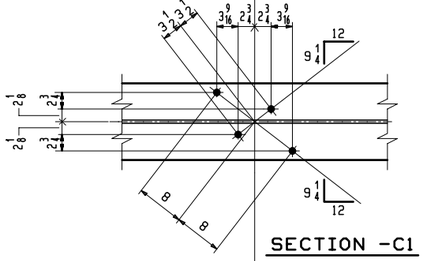

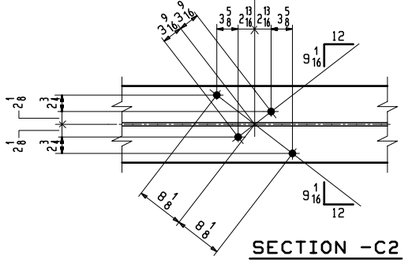

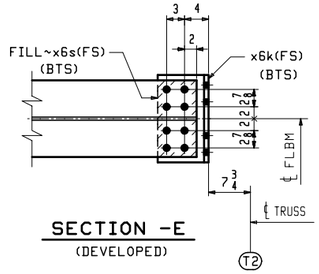

SECTION -E
(DEVELOPED)

FLOORBEAM
(INTERMEDIATE FLOORBEAM - LOOKING WEST)

		MARK	REQ'D	SECT.- ①	②
ALIKE EXCEPT FOR MARK	(@ L1)	18FB1	ONE	C1	a18
	(@ L7)	18FB7	ONE		
ALIKE EXCEPT FOR MARK	(@ L10)	18FB10	ONE	C2	b18
	(@ L18)	18FB18	ONE		

NOTES:
1. FOR GENERAL NOTES SEE DWG. GN1.
2. FOR STANDARD DETAILS SEE DWG. X6.
3. BTS DENOTES BOLT TO SHIP OR SECURE FOR SHIPMENT.

REV.	DATE	REMARKS	DWN	CHK	APVL	SHOP
0						

MATERIAL:	SURFACE PREP. & PAINT:	HOLES:	SHOP BOLTS:
M270-50 (UN)	SEE DWG. GN1	15/16ø	NONE

DESCRIPTION: FLOORBEAM DETAILS

CASCO BAY STEEL STRUCTURES, INC.
1 WALLACE AVE. SOUTH PORTLAND, ME 04106
PHONE (207) 780-6722 FAX. (207) 780-6726
TENSOR 3285

STRUCTURE:	DRAWN:	DATE:
TH-10 OVER OTTER CREEK PONY TRUSS BRIDGE	RB	12/22/15
	CHKD: WJL	DATE: 1/15/16
LOCATION: RUTLAND CITY, VERMONT	JOB NO.	DWG NO.
PROJ NO. BRF 3000 (19)	598	18
CUSTOMER: KUBRICKY CONSTRUCTION CORP.		REV. △

WJL Thu, Jan 21, 2016 04:27:49 PM J:\users\jobs\3285\18.Rev0

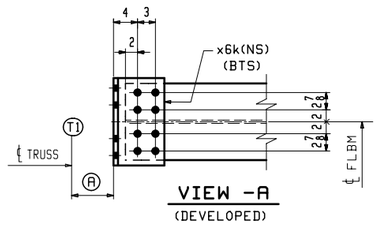

VIEW -A
(DEVELOPED)

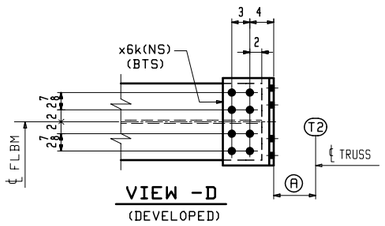

VIEW -D
(DEVELOPED)

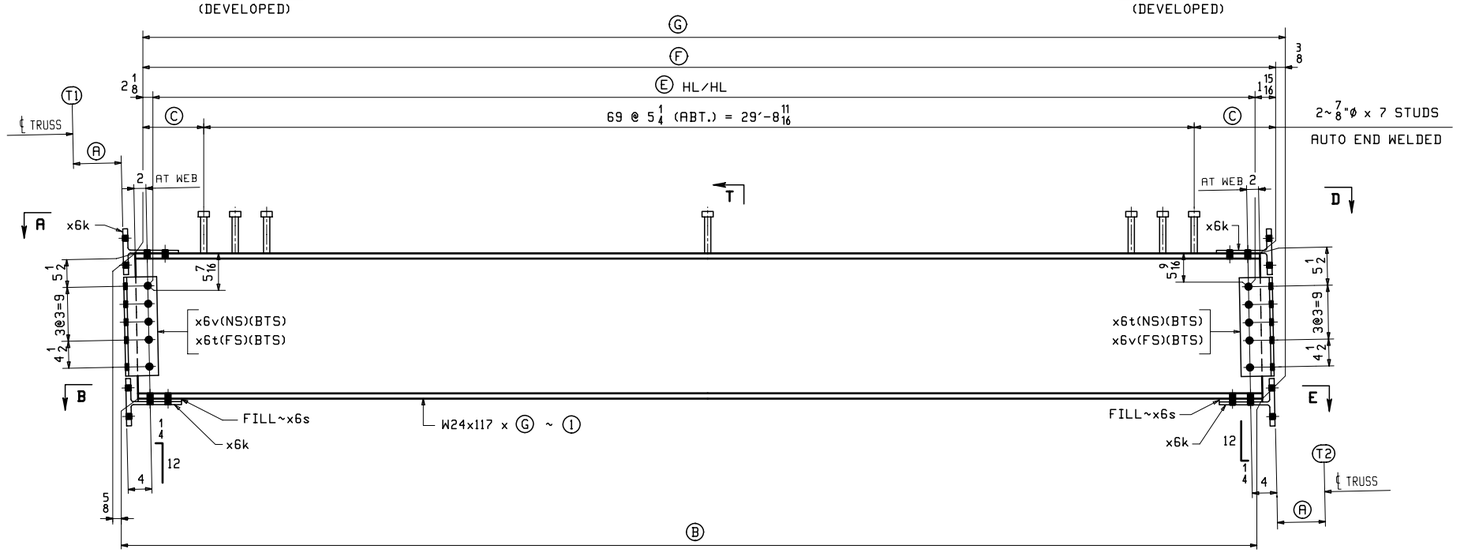

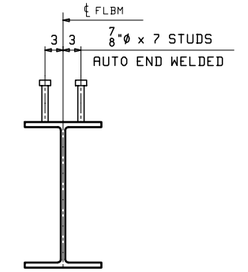

SECTION -T
(TYPICAL SECTION WITH STUDS)

ABM INFO		SHIP	BILL OF MATERIAL					JOB NO.	DRAWING NO.	REV.
								598	19	
PAGE	LINE	MARK	QTY	MARK	MATERIAL	LENGTH FT	LENGTH INCHES	REMARKS	WT	PROCUREMENT NOTES
		19FB3	1		FLOORBEAM			SEE NOTE "G" ALIKE EXCEPT FOR MARK	4195	
		19FB5	1		FLOORBEAM			SEE NOTE "G"	4195	
1	Y		2	a19	W 24x117	31	11 1/16	M270-50F2 (FCM)	3735	
4	H		8	x6k	WT 9x35.5	1	2 5/8	BENT M270-50F2 (FCM)	43	
4	K		4	x6t	L 6x4x1/2	1	4 1/2	M270-50F2 (FCM)	22	
4	K		4	x6v	L 6x4x1/2	1	4 1/2	M270-50F2 (FCM)	22	
4	L		4	x6s	PL 1/4x7 1/4	1	0 3/4	FILL	7	
6	E		280		STUD 7/8ø	0	7	A108	1	
		19FB12	1		FLOORBEAM			SEE NOTE "G" ALIKE EXCEPT FOR MARK	4194	
		19FB16	1		FLOORBEAM			SEE NOTE "G"	4194	
1	Y		2	b19	W 24x117	31	10 15/16	M270-50F2 (FCM)	3734	
4	H		8	x6k	WT 9x35.5	1	2 5/8	BENT M270-50F2 (FCM)	43	
4	K		4	x6t	L 6x4x1/2	1	4 1/2	M270-50F2 (FCM)	22	
4	K		4	x6v	L 6x4x1/2	1	4 1/2	M270-50F2 (FCM)	22	
4	L		4	x6s	PL 1/4x7 1/4	1	0 3/4	FILL	7	
6	E		280		STUD 7/8ø	0	7	A108	1	
		19FB14	1		FLOORBEAM			SEE NOTE "G"	4190	
1	Y		1	c19	W 24x117	31	10 9/16	M270-50F2 (FCM)	3730	
4	H		4	x6k	WT 9x35.5	1	2 5/8	BENT M270-50F2 (FCM)	43	
4	K		2	x6t	L 6x4x1/2	1	4 1/2	M270-50F2 (FCM)	22	
4	K		2	x6v	L 6x4x1/2	1	4 1/2	M270-50F2 (FCM)	22	
4	L		2	x6s	PL 1/4x7 1/4	1	0 3/4	FILL	7	
6	E		140		STUD 7/8ø	0	7	A108	1	

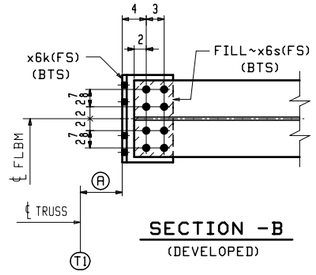

SECTION -B
(DEVELOPED)

FLOORBEAM
(INTERMEDIATE FLOORBEAM - LOOKING WEST)

	MARK	REQ'D	1	A	B	C	E	F	G
ALIKE EXCEPT FOR MARK (@ L3)	19FB3	ONE	a19	7 3/4	31'-10 7/16	1'-1	31'-6 5/8	31'-10 11/16	31'-11 1/16
ALIKE EXCEPT FOR MARK (@ L5)	19FB5	ONE							
ALIKE EXCEPT FOR MARK (@ L12)	19FB12	ONE	b19	7 13/16	31'-10 5/16	1'-0 15/16	31'-6 1/2	31'-10 9/16	31'-10 15/16
ALIKE EXCEPT FOR MARK (@ L16)	19FB16	ONE							
(@ L14)	19FB14	ONE	c19	8	31'-9 15/16	1'-0 3/4	31'-6 1/8	31'-10 3/16	31'-10 9/16

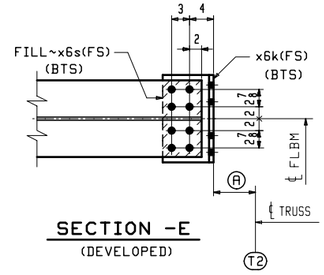

SECTION -E
(DEVELOPED)

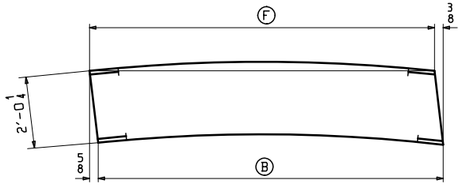

ORIENTATION DIAGRAM
(SEE DWG. C1)

SHOP NOTE "G"

ALL STEEL SHALL BE HOT DIP GALVANIZED IN ACCORDANCE WITH SUBSECTION 506.15.

NOTES:
1. FOR GENERAL NOTES SEE DWG. GN1.
2. FOR STANDARD DETAILS SEE DWG. X6.
3. BTS DENOTES BOLT TO SHIP OR SECURE FOR SHIPMENT.

REV.	DATE	REMARKS	DWN	CHK	APVL	SHOP
0						

MATERIAL:	SURFACE PREP. & PAINT:	HOLES:	SHOP BOLTS:
M270-50 (UN)	SEE DWG. GN1	15/16ø	NONE

DESCRIPTION: FLOORBEAM DETAILS

CASCO BAY STEEL STRUCTURES, INC.
1 WALLACE AVE. SOUTH PORTLAND, ME 04106
PHONE (207) 780-6722 FAX. (207) 780-6726
TENSOR 3285

STRUCTURE:	TH-10 OVER OTTER CREEK PONY TRUSS BRIDGE	DRAWN: RB	DATE: 12/22/15
		CHKD: WJL	DATE: 1/18/15
LOCATION:	RUTLAND CITY, VERMONT	JOB NO.	DWG NO.
PROJ NO.	BRF 3000 (19)	598	19
CUSTOMER:	KUBRICKY CONSTRUCTION CORP.		REV. △

M:\... Thu, Jan 21, 2016 04:28:39 PM ...\sheet\jobs\2595\19 - Rev0

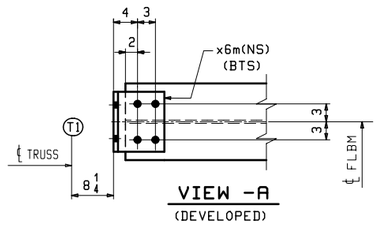

VIEW -A
(DEVELOPED)

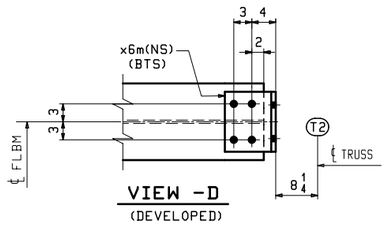

VIEW -D
(DEVELOPED)

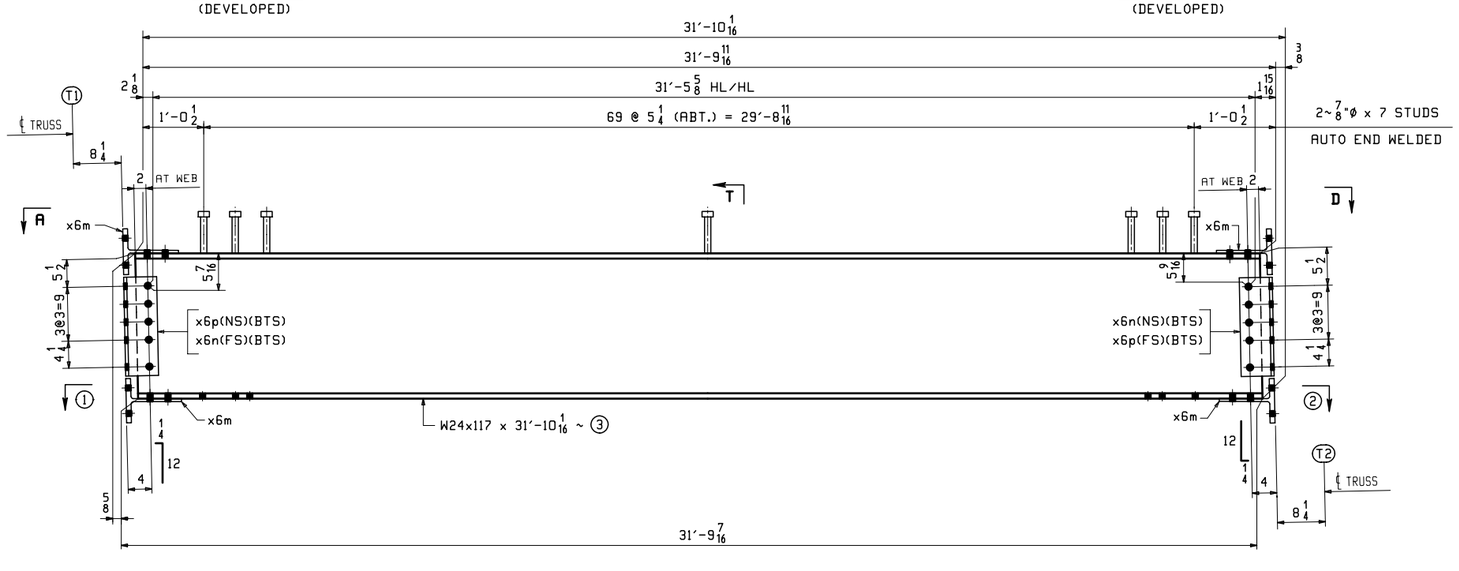

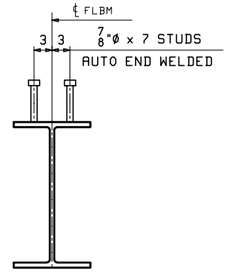

SECTION -T
(TYPICAL SECTION WITH STUDS)

ABM INFO		SHIP	BILL OF MATERIAL					JOB NO.	DRAWING NO.	REV.
								598	20	
PAGE	LINE	MARK	QTY	MARK	MATERIAL	LENGTH FT	LENGTH INCHES	REMARKS	WT	PROCUREMENT NOTES
		20FB2	1		FLOORBEAM			SEE NOTE "G"	4116	
1	Y		1	a20	W 24x117	31	10 1/16	M270-50F2 (FCM)	3725	
4	J		4	x6m	WT 9x35.5	0	10	BENT M270-50F2 (FCM)	30	
4	K		2	x6n	L 6x4x 1/2	1	4 1/4	M270-50F2 (FCM)	22	
4	K		2	x6p	L 6x4x 1/2	1	4 1/4	M270-50F2 (FCM)	22	
6	E		140		STUD 7/8 ø	0	7	A108	1	
		20FB6	1		FLOORBEAM			SEE NOTE "G"	4116	
1	Y		1	b20	W 24x117	31	10 1/16	M270-50F2 (FCM)	3725	
4	J		4	x6m	WT 9x35.5	0	10	BENT M270-50F2 (FCM)	30	
4	K		2	x6n	L 6x4x 1/2	1	4 1/4	M270-50F2 (FCM)	22	
4	K		2	x6p	L 6x4x 1/2	1	4 1/4	M270-50F2 (FCM)	22	
6	E		140		STUD 7/8 ø	0	7	A108	1	

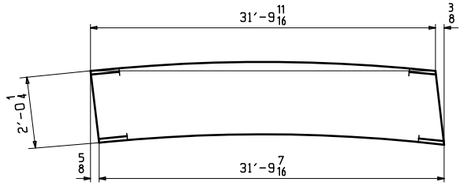

ORIENTATION DIAGRAM
(SEE DWG. C1)

SHOP NOTE "G"

ALL STEEL SHALL BE HOT DIP GALVANIZED IN ACCORDANCE WITH SUBSECTION 506.15.

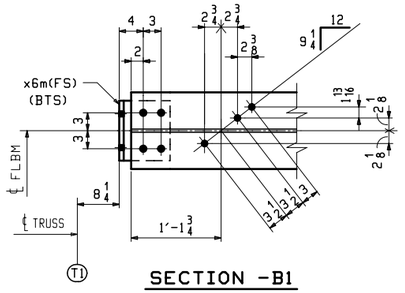

SECTION -B1
(DEVELOPED)

FLOORBEAM
(INTERMEDIATE FLOORBEAM - LOOKING WEST)

	MARK	REQ'D	SECT.- ①	SECT.- ②	③
(@ L2)	20FB2	ONE	B1	E1	a20
(@ L6)	20FB6	ONE	B2	E2	b20

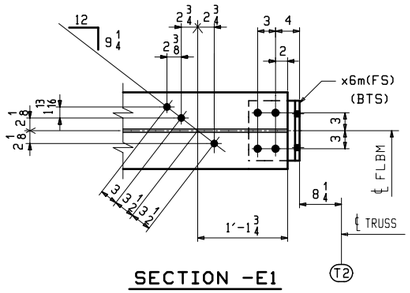

SECTION -E1
(DEVELOPED)

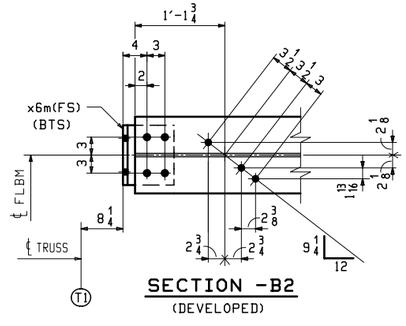

SECTION -B2
(DEVELOPED)

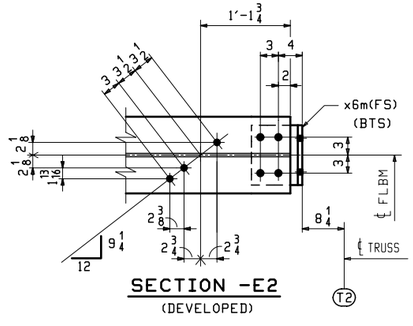

SECTION -E2
(DEVELOPED)

NOTES:
1. FOR GENERAL NOTES SEE DWG. GN1.
2. FOR STANDARD DETAILS SEE DWG. X6.
3. BTS DENOTES BOLT TO SHIP OR SECURE FOR SHIPMENT.

REV.	DATE	REMARKS	DWN	CHK	APVL	SHOP
0						

MATERIAL:	SURFACE PREP. & PAINT:	HOLES:	SHOP BOLTS:
M270-50 (UN)	SEE DWG. GN1	15/16ø	NONE

DESCRIPTION: FLOORBEAM DETAILS

CASCO BAY STEEL STRUCTURES, INC.
1 WALLACE AVE. SOUTH PORTLAND, ME 04106
PHONE (207) 780-6722 FAX. (207) 780-6726
TENSOR 3285

STRUCTURE:	DRAWN:	DATE:
TH-10 OVER OTTER CREEK PONY TRUSS BRIDGE	RB	12/22/15
	CHKD: WJL	DATE: 1/18/16
LOCATION: RUTLAND CITY, VERMONT	JOB NO.	DWG NO.
PROJ NO. BRF 3000 (19)	598	20
CUSTOMER: KUBRICKY CONSTRUCTION CORP.		REV. △

WJL Thu, Jan 21, 2016 04:28:30 PM J:\steel\jobs\3285\20 - Rev.0

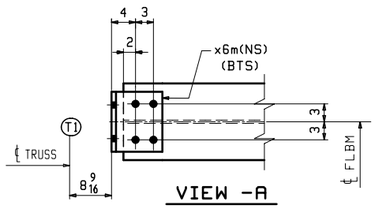

VIEW -A
(DEVELOPED)

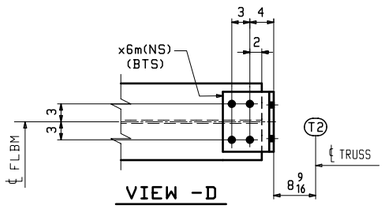

VIEW -D
(DEVELOPED)

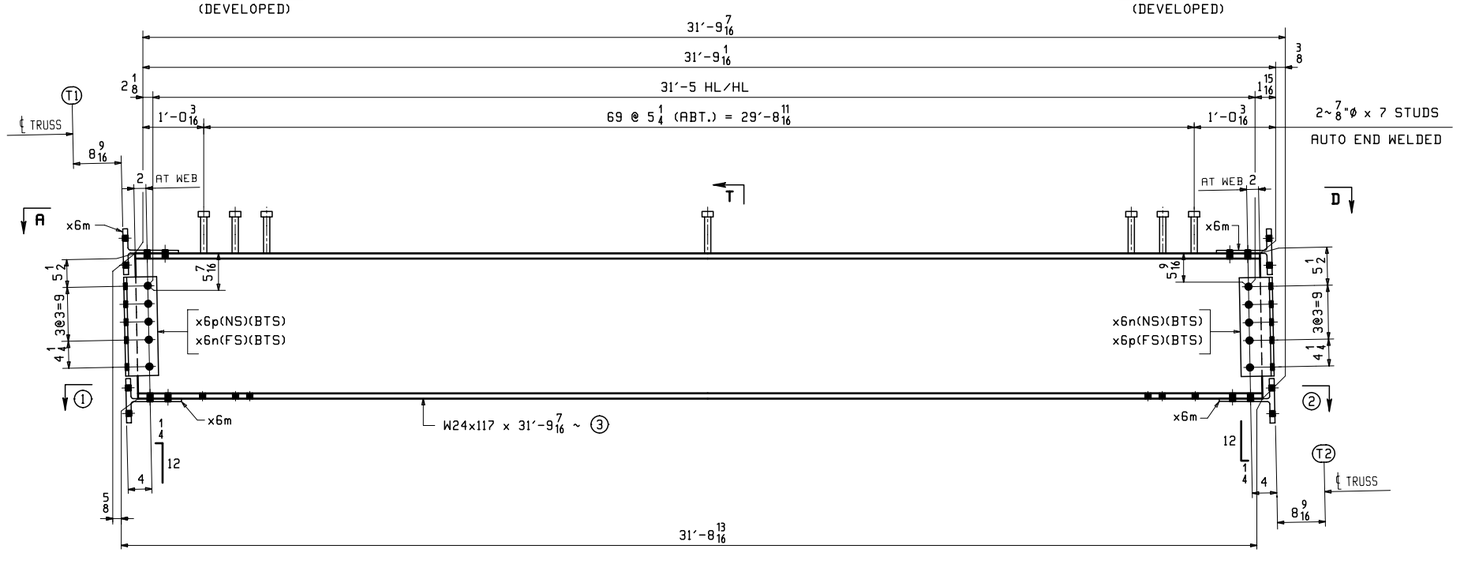

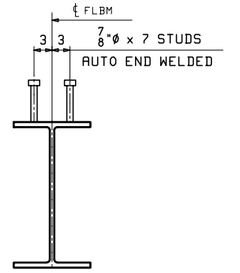

SECTION -T
(TYPICAL SECTION WITH STUDS)

ABM INFO		SHIP	BILL OF MATERIAL					JOB NO.	DRAWING NO.	REV.
								598	21	
PAGE	LINE	MARK	QTY	MARK	MATERIAL	LENGTH FT	LENGTH INCHES	REMARKS	WT	PROCUREMENT NOTES
		21FB11	1		FLOORBEAM			SEE NOTE "G"	4110	
1	Y		1	a21	W 24x117	31	9 7/16	M270-50F2 (FCM)	3719	
4	J		4	x6m	WT 9x35.5	0	10	BENT M270-50F2 (FCM)	30	
4	K		2	x6n	L 6x4x 1/2	1	4 1/4	M270-50F2 (FCM)	22	
4	K		2	x6p	L 6x4x 1/2	1	4 1/4	M270-50F2 (FCM)	22	
6	E		140		STUD 7/8 ø	0	7	A108	1	
		21FB17	1		FLOORBEAM			SEE NOTE "G"	4110	
1	Y		1	b21	W 24x117	31	9 7/16	M270-50F2 (FCM)	3719	
4	J		4	x6m	WT 9x35.5	0	10	BENT M270-50F2 (FCM)	30	
4	K		2	x6n	L 6x4x 1/2	1	4 1/4	M270-50F2 (FCM)	22	
4	K		2	x6p	L 6x4x 1/2	1	4 1/4	M270-50F2 (FCM)	22	
6	E		140		STUD 7/8 ø	0	7	A108	1	

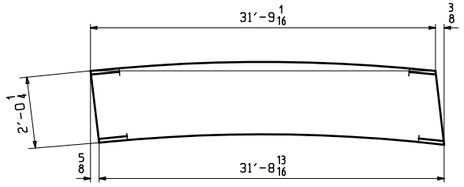

ORIENTATION DIAGRAM
(SEE DWG. C1)

SHOP NOTE "G"

ALL STEEL SHALL BE HOT DIP GALVANIZED IN ACCORDANCE WITH SUBSECTION 506.15.

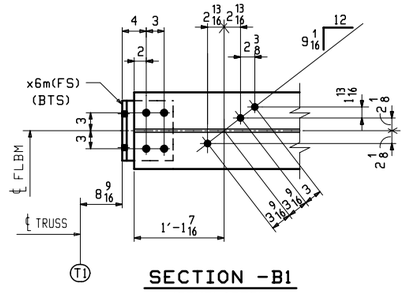

SECTION -B1
(DEVELOPED)

FLOORBEAM
(INTERMEDIATE FLOORBEAM - LOOKING WEST)

	MARK	REQ'D	SECT.- ①	SECT.- ②	③
(@ L11)	21FB11	ONE	B1	E1	a21
(@ L17)	21FB17	ONE	B2	E2	b21

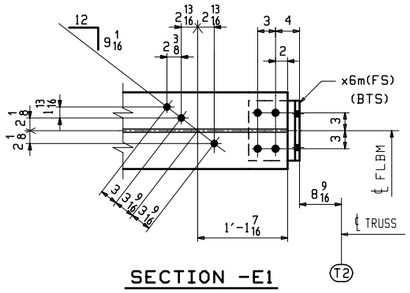

SECTION -E1
(DEVELOPED)

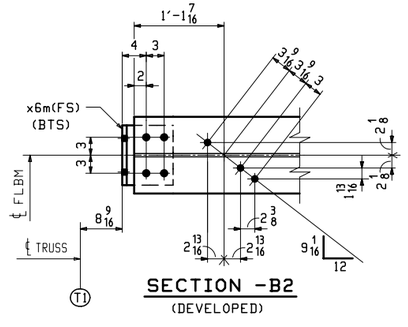

SECTION -B2
(DEVELOPED)

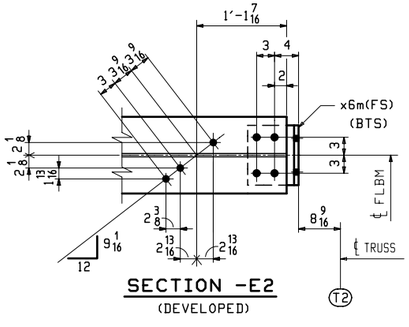

SECTION -E2
(DEVELOPED)

NOTES:
1. FOR GENERAL NOTES SEE DWG. GN1.
2. FOR STANDARD DETAILS SEE DWG. X6.
3. BTS DENOTES BOLT TO SHIP OR SECURE FOR SHIPMENT.

REV.	DATE	REMARKS	DWN	CHK	APVL	SHOP
0						

MATERIAL:	SURFACE PREP. & PAINT:	HOLES:	SHOP BOLTS:
M270-50 (UN)	SEE DWG. GN1	15/16ø	NONE

DESCRIPTION: FLOORBEAM DETAILS

CASCO BAY STEEL STRUCTURES, INC.
1 WALLACE AVE. SOUTH PORTLAND, ME 04106
PHONE (207) 780-6722 FAX. (207) 780-6726
TENSOR 3285

STRUCTURE:	DRAWN:	DATE:
TH-10 OVER OTTER CREEK PONY TRUSS BRIDGE	RB	12/22/15
	CHKD: WJL	DATE: 1/18/16
LOCATION: RUTLAND CITY, VERMONT	JOB NO.	DWG NO.
PROJ NO. BRF 3000 (19)	598	21
CUSTOMER: KUBRICKY CONSTRUCTION CORP.		REV. △

WJL Thu, Jan 21, 2016 04:30:17 PM c:\users\pbs\3285\21.1 Rev0

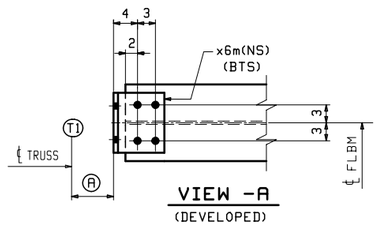

VIEW -A
(DEVELOPED)

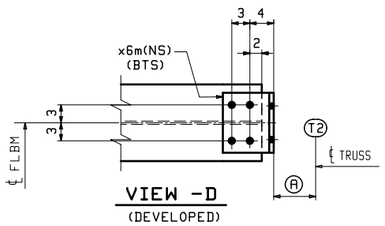

VIEW -D
(DEVELOPED)

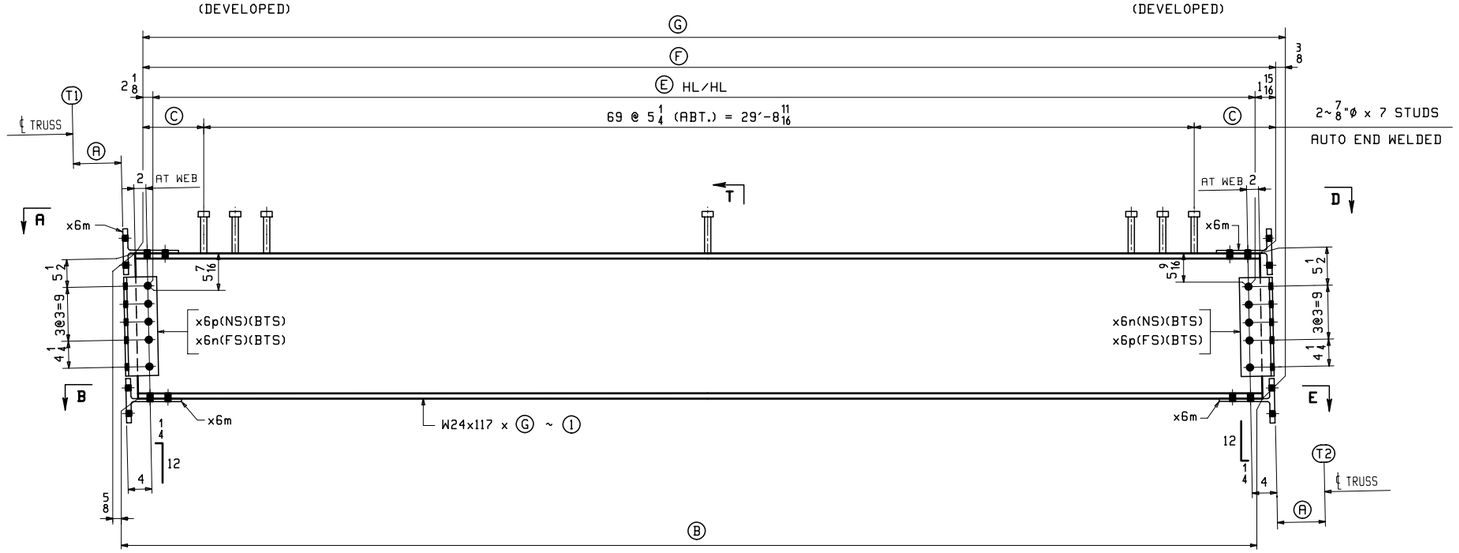

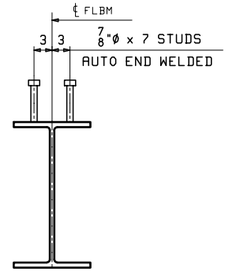

SECTION -T
(TYPICAL SECTION WITH STUDS)

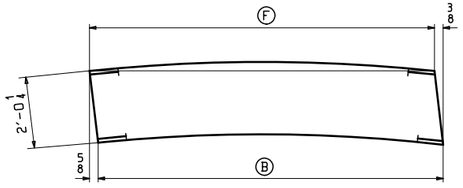

ORIENTATION DIAGRAM
(SEE DWG. C1)

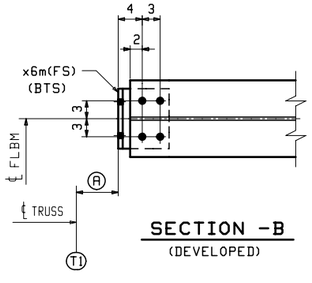

SECTION -B
(DEVELOPED)

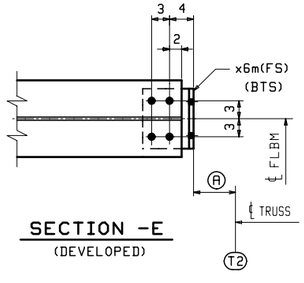

SECTION -E
(DEVELOPED)

FLOORBEAM

(INTERMEDIATE FLOORBEAM - LOOKING WEST)

	MARK	REQ'D	I	A	B	C	E	F	G
(@ L4)	**22FB4**	ONE	a22	8 1/4	31'-9 7/16	1'-0 1/2	31'-5 5/8	31'-9 11/16	31'-10 1/16
ALIKE EXCEPT FOR MARK (@ L13)	**22FB13**	ONE	b22	9	31'-7 15/16	11 3/4	31'-4 1/8	31'-8 3/16	31'-8 9/16
ALIKE EXCEPT FOR MARK (@ L15)	**22FB15**	ONE							

NOTES:
1. FOR GENERAL NOTES SEE DWG. GN1.
2. FOR STANDARD DETAILS SEE DWG. X6.
3. BTS DENOTES BOLT TO SHIP OR SECURE FOR SHIPMENT.

ABM INFO		SHIP	BILL OF MATERIAL					JOB NO.	DRAWING NO.	REV.
								598	22	
PAGE	LINE	MARK	QTY	MARK	MATERIAL	LENGTH FT	LENGTH INCHES	REMARKS	WT	PROCUREMENT NOTES
		22FB4	1		FLOORBEAM			SEE NOTE "G"	4116	
1	Y		1	a22	W 24x117	31	10 5/16	M270-50F2 (FCM)	3725	
4	J		4	x6m	WT 9x35.5	0	10	BENT M270-50F2 (FCM)	30	
4	K		2	x6n	L 6x4x1/2	1	4 1/4	M270-50F2 (FCM)	22	
4	K		2	x6p	L 6x4x1/2	1	4 1/4	M270-50F2 (FCM)	22	
6	E		140		STUD 7/8 ø	0	7	A108	1	
		22FB13	1		FLOORBEAM			SEE NOTE "G" ALIKE EXCEPT FOR MARK	4101	
		22FB15	1		FLOORBEAM			SEE NOTE "G"	4101	
1	Y		2	b22	W 24x117	31	8 9/16	M270-50F2 (FCM)	3710	
4	J		8	x6m	WT 9x35.5	0	10	BENT M270-50F2 (FCM)	30	
4	K		4	x6n	L 6x4x1/2	1	4 1/4	M270-50F2 (FCM)	22	
4	K		4	x6p	L 6x4x1/2	1	4 1/4	M270-50F2 (FCM)	22	
6	E		280		STUD 7/8 ø	0	7	A108	1	

SHOP NOTE "G"

ALL STEEL SHALL BE HOT DIP GALVANIZED IN ACCORDANCE WITH SUBSECTION 506.15.

REV.	DATE	REMARKS	DWN	CHK	APVL	SHOP
0						

MATERIAL:	SURFACE PREP. & PAINT:	HOLES:	SHOP BOLTS:
M270-50 (UN)	SEE DWG. GN1	15/16ø	NONE

DESCRIPTION: FLOORBEAM DETAILS

CASCO BAY STEEL STRUCTURES, INC.
1 WALLACE AVE. SOUTH PORTLAND, ME 04106
PHONE (207) 780-6722 FAX. (207) 780-6726
TENSOR 3285

STRUCTURE:	TH-10 OVER OTTER CREEK PONY TRUSS BRIDGE	DRAWN: RB	DATE: 12/22/15
		CHKD: WJL	DATE: 1/18/16
LOCATION:	RUTLAND CITY, VERMONT	JOB NO.	DWG NO.
PROJ NO.	BRF 3000 (19)	598	22
CUSTOMER:	KUBRICKY CONSTRUCTION CORP.		REV. △

WJL Thu, Jan 21, 2016 04:30:20 PM c:\users\jobs\3285\22 - Rev0

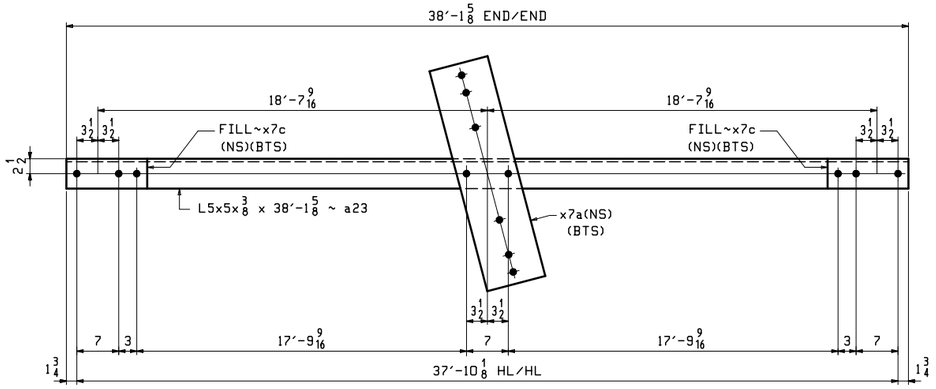

2 ~ DIAGONALS ~ 23LB1

(LATERAL BRACING @ BOTTOM OF FLBM IN SPAN 1)

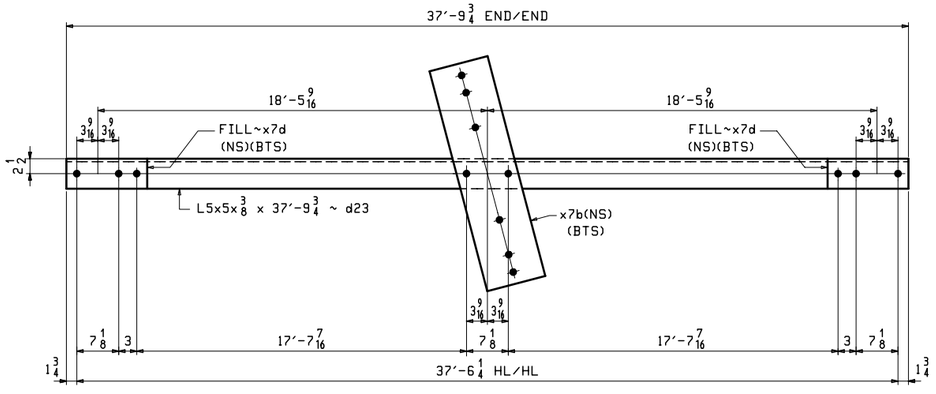

2 ~ DIAGONALS ~ 23LB4

(LATERAL BRACING @ BOTTOM OF FLBM IN SPAN 2)

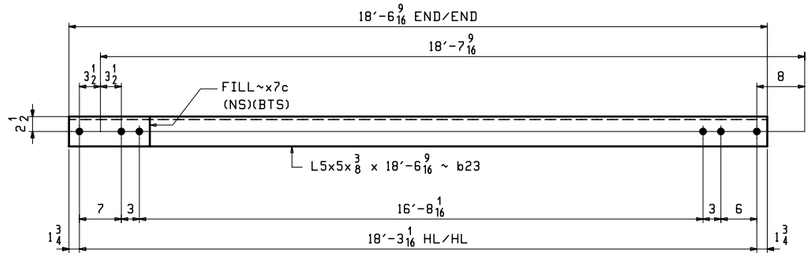

2 ~ DIAGONALS ~ 23LB2

(LATERAL BRACING @ BOTTOM OF FLBM IN SPAN 1)

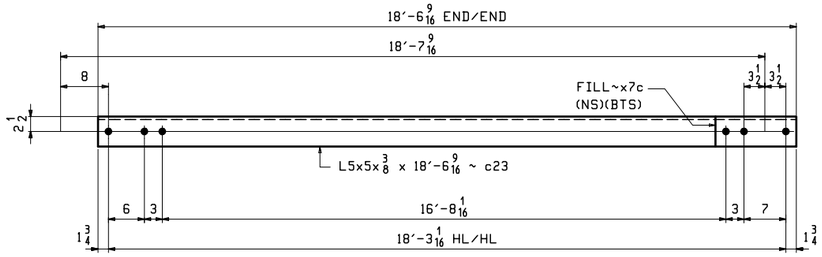

2 ~ DIAGONALS ~ 23LB3

(LATERAL BRACING @ BOTTOM OF FLBM IN SPAN 1)

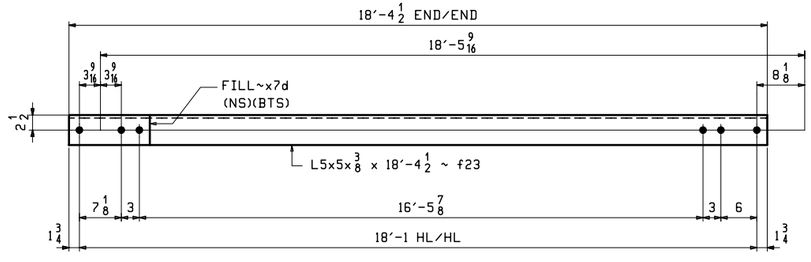

2 ~ DIAGONALS ~ 23LB5

(LATERAL BRACING @ BOTTOM OF FLBM IN SPAN 2)

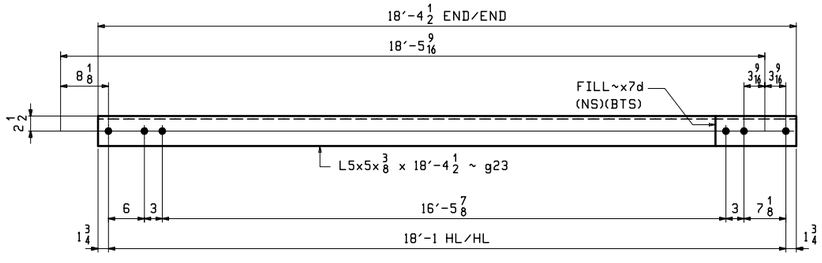

2 ~ DIAGONALS ~ 23LB6

(LATERAL BRACING @ BOTTOM OF FLBM IN SPAN 2)

ABM INFO		SHIP	BILL OF MATERIAL					JOB NO.	DRAWING NO.	REV.
								598	23	
PAGE	LINE	MARK	QTY	MARK	MATERIAL	LENGTH FT	LENGTH INCHES	REMARKS	WT	PROCUREMENT NOTES
		23LB1	2		DIAGONALS			SEE NOTE "G"	541	
5	B		2	a23	L 5x5x3/8	38	1 5/8	M270-50T2	468	
5	H		2	x7a	PL 1/2x10	3	2	M270-50T2	54	
5	J		4	x7c	PL 1/2x5	1	1 1/2	FILL	10	
		23LB2	2		DIAGONALS			SEE NOTE "G"	237	
5	C		2	b23	L 5x5x3/8	18	6 9/16	M270-50T2	228	
5	J		2	x7c	PL 1/2x5	1	1 1/2	FILL	10	
		23LB3	2		DIAGONALS			SEE NOTE "G"	237	
5	C		2	c23	L 5x5x3/8	18	6 9/16	M270-50T2	228	
5	J		2	x7c	PL 1/2x5	1	1 1/2	FILL	10	
		23LB4	2		DIAGONALS			SEE NOTE "G"	538	
5	E		2	d23	L 5x5x3/8	37	9 3/4	M270-50T2	464	
5	H		2	x7b	PL 1/2x10	3	2 1/4	M270-50T2	54	
5	J		4	x7d	PL 1/2x5	1	1 5/8	FILL	10	
		23LB5	2		DIAGONALS			SEE NOTE "G"	235	
5	F		2	f23	L 5x5x3/8	18	4 1/2	M270-50T2	226	
5	J		2	x7d	PL 1/2x5	1	1 5/8	FILL	10	
		23LB6	2		DIAGONALS			SEE NOTE "G"	235	
5	F		2	g23	L 5x5x3/8	18	4 1/2	M270-50T2	226	
5	J		2	x7d	PL 1/2x5	1	1 5/8	FILL	10	

SHOP NOTE "G"

ALL STEEL SHALL BE HOT DIP GALVANIZED IN ACCORDANCE WITH SUBSECTION 506.15.

NOTES:
1. FOR GENERAL NOTES SEE DWG. GN1.
2. FOR STANDARD DETAILS SEE DWG. X7.
3. BTS DENOTES BOLT TO SHIP OR SECURE FOR SHIPMENT.

REV.	DATE	REMARKS	DWN	CHK	APVL	SHOP
0						

MATERIAL:	SURFACE PREP. & PAINT:	HOLES:	SHOP BOLTS:
M270-50	SEE DWG. GN1	15/16Ø	NONE

DESCRIPTION: LATERAL BRACING

CASCO BAY STEEL STRUCTURES, INC.
1 WALLACE AVE. SOUTH PORTLAND, ME 04106
PHONE (207) 780-6722 FAX. (207) 780-6726
TENSOR 3285

STRUCTURE:	DRAWN:	DATE:
TH-10 OVER OTTER CREEK PONY TRUSS BRIDGE	RB	12/23/15
	CHKD: WJL	DATE: 1/18/16
LOCATION: RUTLAND CITY, VERMONT	JOB NO.	DWG NO.
PROJ NO. BRF 3000 (19)	598	23
CUSTOMER: KUBRICKY CONSTRUCTION CORP.		REV. △

WJL Thu, Jan 21, 2016 04:31:54 PM J:\active\598\2385\23 - Rev0

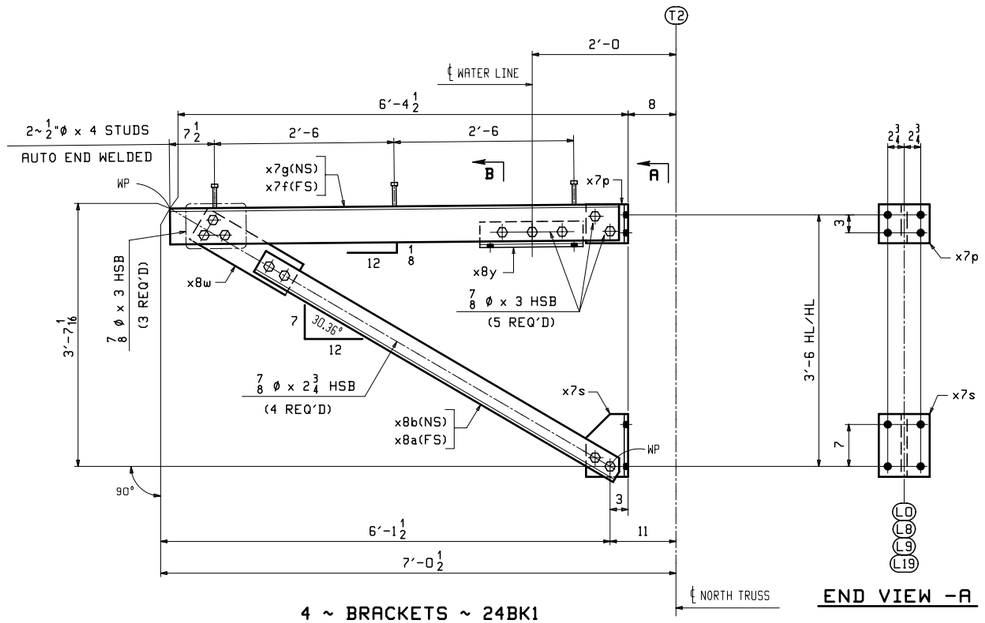

4 ~ BRACKETS ~ 24BK1

(SIDEWALK SUPPORT @ L0, L8, L9 & L19)

END VIEW -A

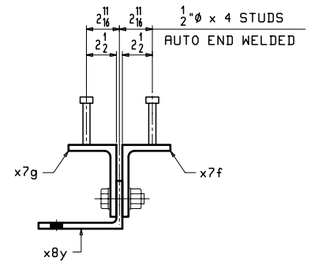

SECTION -B

(ENLARGED)

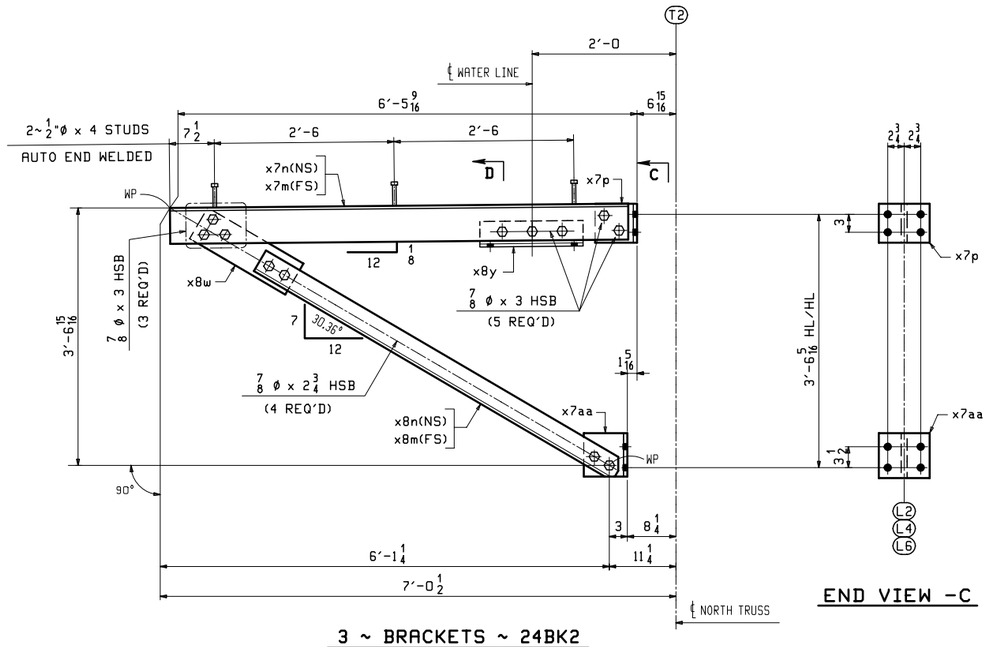

3 ~ BRACKETS ~ 24BK2

(SIDEWALK SUPPORT @ L2, L4 & L6)

END VIEW -C

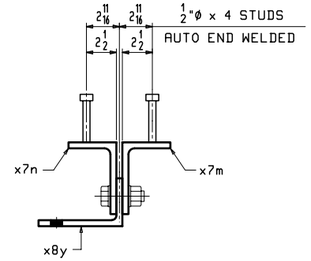

SECTION -D

(ENLARGED)

SHOP NOTE "G"

ALL STEEL (EXCEPT FOR BOLTS) SHALL BE HOT DIP GALVANIZED IN ACCORDANCE WITH SUBSECTION 506.15.

BOLTS AND WASHERS SHALL BE MECHANICALLY GALVANIZED IN ACCORDANCE WITH ASTM B695, CLASS 55.

NOTES:

1. FOR GENERAL NOTES SEE DWG. GN1.
2. FOR STANDARD DETAILS SEE DWG. X7 & X8.
3. SHOP BOLTS SHALL BE 7/8ø A325-1.
   ALL BOLTS SHALL BE WITH ONE HARDENED WASHER AND ONE DTI WASHER.
   BOLTS AND WASHERS SHALL BE MECHANICALLY GALVANIZED.

ABM INFO		SHIP	BILL OF MATERIAL					JOB NO.	DRAWING NO.	REV.
								598	24	
PAGE	LINE	MARK	QTY	MARK	MATERIAL	LENGTH FT	LENGTH INCHES	REMARKS	WT	PROCUREMENT NOTES
		24BK1	4		BRACKETS			SEE NOTE "G"	403	
4	N		4	x7f	L 6x4x1/2	6	3		101	
4	N		4	x7g	L 6x4x1/2	6	3		101	
4	Q		4	x7p	WT 7x30.5	0	6 1/2		17	
4	S		4	x7s	WT 7x30.5	0	10 1/2	CUT AS REQ'D	27	
4	P		4	x8a	L 4x4x3/8	5	9 1/2		56	
4	P		4	x8b	L 4x4x3/8	5	9 1/2		56	
4	T		4	x8w	PL 3/8x6	1	6 1/2		12	
4	U		4	x8y	L 7x4x3/8	1	5 1/2		20	
6	C		24		STUD 1/2 ø	0	4	A108	0.28	
					SHOP BOLTS					
11	F		16		7/8 ø HSB	0	2 3/4	(MECH. GALV.) A325-1	0.80	
11	G		32		7/8 ø HSB	0	3	(MECH. GALV.) A325-1	0.80	
11	Y		48		7/8 ø HSW			(MECH. GALV.) F436	0.07	
11	Z		48		LORD IND. 7/8 ø HSB WASH FOR			(MECH. GALV.) F959	0.07	
		24BK2	3		BRACKETS			SEE NOTE "G"	397	
4	N		3	x7m	L 6x4x1/2	6	4 1/16		102	
4	N		3	x7n	L 6x4x1/2	6	4 1/16		102	
4	Q		3	x7p	WT 7x30.5	0	6 1/2		17	
4	R		3	x7aa	WT 7x30.5	0	7 1/4		18	
4	P		3	x8m	L 4x4x3/8	5	9 1/4		56	
4	P		3	x8n	L 4x4x3/8	5	9 1/4		56	
4	T		3	x8w	PL 3/8x6	1	6 1/2		12	
4	U		3	x8y	L 7x4x3/8	1	5 1/2		20	
6	C		18		STUD 1/2 ø	0	4	A108	0.28	
					SHOP BOLTS					
11	F		12		7/8 ø HSB	0	2 3/4	(MECH. GALV.) A325-1	0.80	
11	G		24		7/8 ø HSB	0	3	(MECH. GALV.) A325-1	0.80	
11	Y		36		7/8 ø HSW			(MECH. GALV.) F436	0.07	
11	Z		36		LORD IND. 7/8 ø HSB WASH FOR			(MECH. GALV.) F959	0.07	

REV.	DATE	REMARKS	DWN	CHK	APVL	SHOP
0						

MATERIAL:	SURFACE PREP. & PAINT:	HOLES:	SHOP BOLTS:
M270-50 (UN)	SEE DWG. GN1	15/16ø	AS NOTED

DESCRIPTION: BRACKET DETAILS

CASCO BAY STEEL STRUCTURES, INC.
1 WALLACE AVE. SOUTH PORTLAND, ME 04106
PHONE (207) 780-6722 FAX. (207) 780-6726
TENSOR 3285

STRUCTURE:	TH-10 OVER OTTER CREEK PONY TRUSS BRIDGE	DRAWN: RB	DATE: 1/4/16
		CHKD: WJL	DATE: 1/18/16
LOCATION:	RUTLAND CITY, VERMONT	JOB NO.	DWG NO.
PROJ NO.	BRF 3000 (19)	598	24
CUSTOMER:	KUBRICKY CONSTRUCTION CORP.		REV. △

M:\... Thu, Jan 21, 2016 04:32:01 PM ...\sheets\3285-24 - Rev0

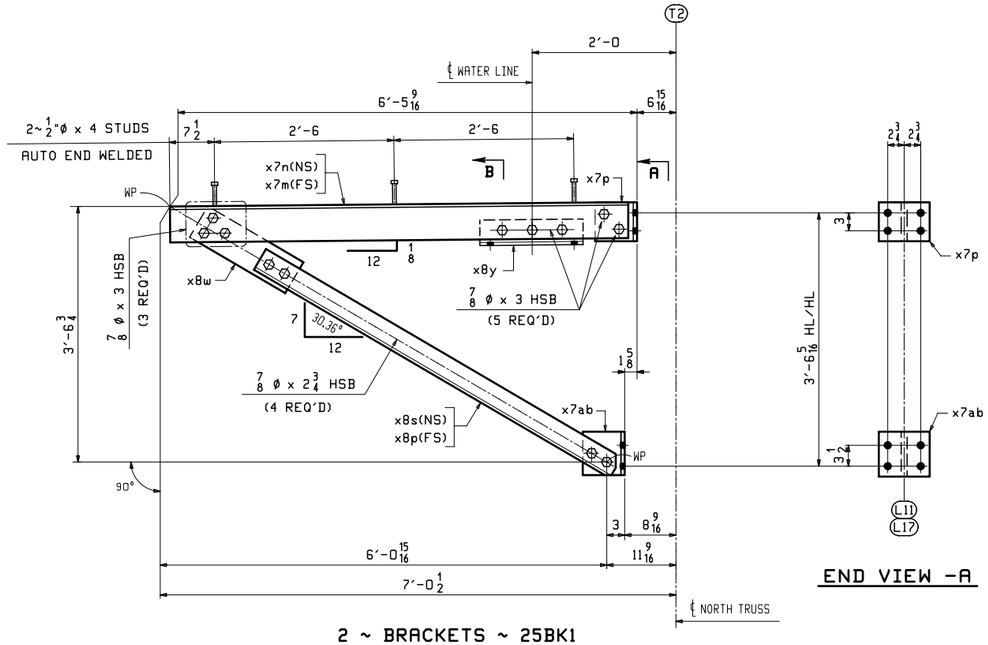

2 ~ BRACKETS ~ 25BK1

(SIDEWALK SUPPORT @ L11 & L17)

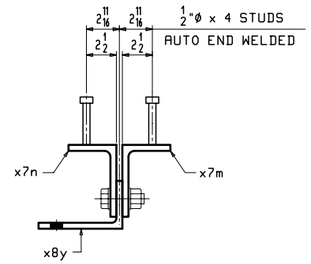

SECTION -B

(ENLARGED)

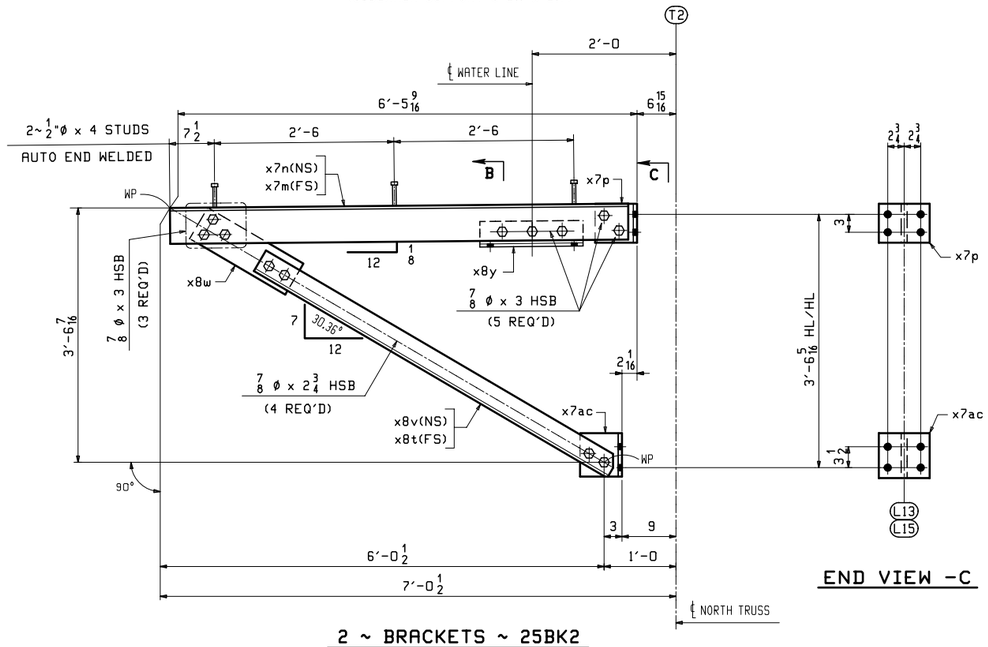

2 ~ BRACKETS ~ 25BK2

(SIDEWALK SUPPORT @ L13 & L15)

END VIEW -A

END VIEW -C

ABM INFO		SHIP	BILL OF MATERIAL					JOB NO.	DRAWING NO.	REV.
								598	25	
PAGE	LINE	MARK	QTY	MARK	MATERIAL	LENGTH FT	LENGTH INCHES	REMARKS	WT	PROCUREMENT NOTES
		25BK1	2		BRACKETS			SEE NOTE "G"	396	
4	N		2	x7m	L 6x4x 1/2	6	4 1/16		102	
4	N		2	x7n	L 6x4x 1/2	6	4 1/16		102	
4	Q		2	x7p	WT 7x30.5	0	6 1/2		17	
4	R		2	x7ab	WT 7x30.5	0	7 1/4		18	
4	P		2	x8p	L 4x4x 3/8	5	8 13/16		56	
4	P		2	x8s	L 4x4x 3/8	5	8 13/16		56	
4	T		2	x8w	PL 3/8x6	1	6 1/2		12	
4	U		2	x8y	L 7x4x 3/8	1	5 1/2		20	
6	C		12		STUD 1/2 ø	0	4	A108	0.28	
					SHOP BOLTS					
11	F		8		7/8 ø HSB	0	2 3/4	(MECH. GALV.) A325-1	0.80	
11	G		16		7/8 ø HSB	0	3	(MECH. GALV.) A325-1	0.80	
11	Y		24		7/8 ø HSW			(MECH. GALV.) F436	0.07	
11	Z		24		LORD IND. 7/8 ø HSB WASH FOR			(MECH. GALV.) F959	0.07	
		25BK2	2		BRACKETS			SEE NOTE "G"	395	
4	N		2	x7m	L 6x4x 1/2	6	4 1/16		102	
4	N		2	x7n	L 6x4x 1/2	6	4 1/16		102	
4	Q		2	x7p	WT 7x30.5	0	6 1/2		17	
4	R		2	x7ac	WT 7x30.5	0	7 1/4		18	
4	P		2	x8t	L 4x4x 3/8	5	8 5/16		55	
4	P		2	x8v	L 4x4x 3/8	5	8 5/16		55	
4	T		2	x8w	PL 3/8x6	1	6 1/2		12	
4	U		2	x8y	L 7x4x 3/8	1	5 1/2		20	
6	C		12		STUD 1/2 ø	0	4	A108	0.28	
					SHOP BOLTS					
11	F		8		7/8 ø HSB	0	2 3/4	(MECH. GALV.) A325-1	0.80	
11	G		16		7/8 ø HSB	0	3	(MECH. GALV.) A325-1	0.80	
11	Y		24		7/8 ø HSW			(MECH. GALV.) F436	0.07	
11	Z		24		LORD IND. 7/8 ø HSB WASH FOR			(MECH. GALV.) F959	0.07	

SHOP NOTE "G"

ALL STEEL (EXCEPT FOR BOLTS) SHALL BE HOT DIP GALVANIZED IN ACCORDANCE WITH SUBSECTION 506.15.

BOLTS AND WASHERS SHALL BE MECHANICALLY GALVANIZED IN ACCORDANCE WITH ASTM B695, CLASS 55.

NOTES:

1. FOR GENERAL NOTES SEE DWG. GN1.
2. FOR STANDARD DETAILS SEE DWG. X7 & X8.
3. SHOP BOLTS SHALL BE 7/8ø A325-1.
   ALL BOLTS SHALL BE WITH ONE HARDENED WASHER AND ONE DTI WASHER.
   BOLTS AND WASHERS SHALL BE MECHANICALLY GALVANIZED.

REV.	DATE	REMARKS	DWN	CHK	APVL	SHOP
0						

MATERIAL:	SURFACE PREP. & PAINT:	HOLES:	SHOP BOLTS:
M270-50 (UN)	SEE DWG. GN1	15/16ø	AS NOTED

DESCRIPTION: BRACKET DETAILS

CASCO BAY STEEL STRUCTURES, INC.
1 WALLACE AVE. SOUTH PORTLAND, ME 04106
PHONE (207) 780-6722 FAX. (207) 780-6726
TENSOR 3285

STRUCTURE: TH-10 OVER OTTER CREEK PONY TRUSS BRIDGE	DRAWN: RB	DATE: 1/4/16
	CHKD: WJL	DATE: 1/18/16
LOCATION: RUTLAND CITY, VERMONT	JOB NO. 598	DWG NO. 25
PROJ NO. BRF 3000 (19)		
CUSTOMER: KUBRICKY CONSTRUCTION CORP.		REV. △

M:\... Thu, Jan 21, 2016 04:30:57 PM ...\sheets\25BK25's Rev0

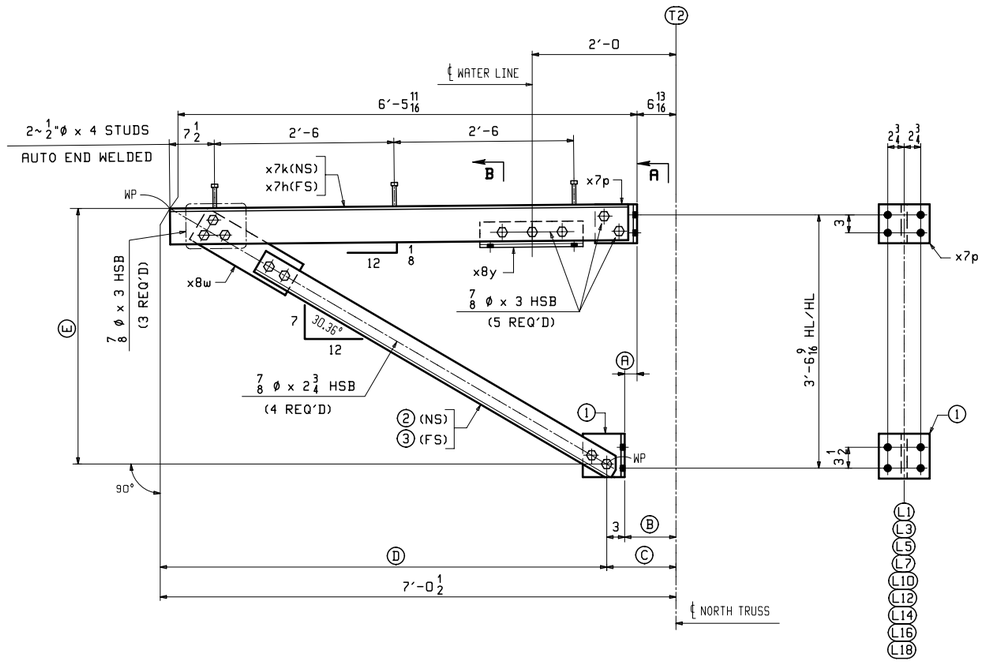

BRACKETS
(SIDEWALK SUPPORT)

	MARK	REQ'D	Ⓐ	Ⓑ	Ⓒ	Ⓓ	Ⓔ	①	②	③
(@ L1, L3, L5, L7, L10, L18)	**26BK1**	6	15/16	7 3/4	10 3/4	6'-1 3/4	3'-7 3/16	x7t	x8d	x8c
(@ L12, L16)	**26BK2**	2	1"	7 13/16	10 13/16	6'-1 11/16	3'-7 1/8	x7v	x8g	x8f
(@ L14)	**26BK3**	1	1 3/16	8	11	6'-1 1/2	3'-7 1/16	x7w	x8k	x8h

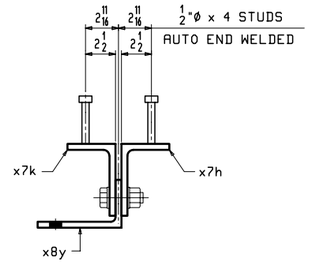

SECTION -B
(ENLARGED)

END VIEW -A

ABM INFO PAGE	LINE	SHIP MARK	QTY	MARK	BILL OF MATERIAL	LENGTH FT	LENGTH INCHES	JOB NO. 598 REMARKS	DRAWING NO. 26 WT	REV. PROCUREMENT NOTES
		26BK3	1		BRACKETS			SEE NOTE "G"	397	
4	N		1	x7h	L 6x4x 1/2	6	4 3/16		103	
4	N		1	x7k	L 6x4x 1/2	6	4 3/16		103	
4	Q		1	x7p	WT 7x30.5	0	6 1/2		17	
4	R		1	x7w	WT 7x30.5	0	7 1/4	CUT AS REQ'D	18	
4	P		1	x8h	L 4x4x 3/8	5	9 1/2		56	
4	P		1	x8k	L 4x4x 3/8	5	9 1/2		56	
4	T		1	x8w	PL 3/8x6	1	6 1/2		12	
4	U		1	x8y	L 7x4x 3/8	1	5 1/2		20	
6	C		6		STUD 1/2 Ø	0	4	A108	0.28	
					SHOP BOLTS					
11	F		4		7/8 Ø HSB	0	2 3/4	(MECH. GALV.) A325-1	0.80	
11	G		8		7/8 Ø HSB	0	3	(MECH. GALV.) A325-1	0.80	
11	Y		12		7/8 Ø HSW			(MECH. GALV.) F436	0.07	
11	Z		12		LOAD IND. 7/8 WASH FOR Ø HSB			(MECH. GALV.) F959	0.07	

ABM INFO PAGE	LINE	SHIP MARK	QTY	MARK	BILL OF MATERIAL	LENGTH FT	LENGTH INCHES	JOB NO. 598 REMARKS	DRAWING NO. 26 WT	REV. PROCUREMENT NOTES
		26BK1	6		BRACKETS			SEE NOTE "G"	398	
4	N		6	x7h	L 6x4x 1/2	6	4 3/16		103	
4	N		6	x7k	L 6x4x 1/2	6	4 3/16		103	
4	Q		6	x7p	WT 7x30.5	0	6 1/2		17	
4	R		6	x7t	WT 7x30.5	0	7 1/4	CUT AS REQ'D	18	
4	P		6	x8c	L 4x4x 3/8	5	9 13/16		57	
4	P		6	x8d	L 4x4x 3/8	5	9 13/16		57	
4	T		6	x8w	PL 3/8x6	1	6 1/2		12	
4	U		6	x8y	L 7x4x 3/8	1	5 1/2		20	
6	C		36		STUD 1/2 Ø	0	4	A108	0.28	
					SHOP BOLTS					
11	F		24		7/8 Ø HSB	0	2 3/4	(MECH. GALV.) A325-1	0.80	
11	G		48		7/8 Ø HSB	0	3	(MECH. GALV.) A325-1	0.80	
11	Y		72		7/8 Ø HSW			(MECH. GALV.) F436	0.07	
11	Z		72		LOAD IND. 7/8 WASH FOR Ø HSB			(MECH. GALV.) F959	0.07	
		26BK2	2		BRACKETS			SEE NOTE "G"	398	
4	N		2	x7h	L 6x4x 1/2	6	4 3/16		103	
4	N		2	x7k	L 6x4x 1/2	6	4 3/16		103	
4	Q		2	x7p	WT 7x30.5	0	6 1/2		17	
4	R		2	x7v	WT 7x30.5	0	7 1/4	CUT AS REQ'D	18	
4	P		2	x8f	L 4x4x 3/8	5	9 3/4		57	
4	P		2	x8g	L 4x4x 3/8	5	9 3/4		57	
4	T		2	x8w	PL 3/8x6	1	6 1/2		12	
4	U		2	x8y	L 7x4x 3/8	1	5 1/2		20	
6	C		12		STUD 1/2 Ø	0	4	A108	0.28	
					SHOP BOLTS					
11	F		8		7/8 Ø HSB	0	2 3/4	(MECH. GALV.) A325-1	0.80	
11	G		16		7/8 Ø HSB	0	3	(MECH. GALV.) A325-1	0.80	
11	Y		24		7/8 Ø HSW			(MECH. GALV.) F436	0.07	
11	Z		24		LOAD IND. 7/8 WASH FOR Ø HSB			(MECH. GALV.) F959	0.07	

SHOP NOTE "G"

ALL STEEL (EXCEPT FOR BOLTS) SHALL BE HOT DIP GALVANIZED IN ACCORDANCE WITH SUBSECTION 506.15.
BOLTS AND WASHERS SHALL BE MECHANICALLY GALVANIZED IN ACCORDANCE WITH ASTM B695, CLASS 55.

NOTES:
1. FOR GENERAL NOTES SEE DWG. GN1.
2. FOR STANDARD DETAILS SEE DWG. X7 & X8.
3. SHOP BOLTS SHALL BE 7/8 Ø A325-1.
   ALL BOLTS SHALL BE WITH ONE HARDENED WASHER AND ONE DTI WASHER.
   BOLTS AND WASHERS SHALL BE MECHANICALLY GALVANIZED.

REV.	DATE	REMARKS	DWN	CHK	APVL	SHOP
0						

MATERIAL:	SURFACE PREP. & PAINT:	HOLES:	SHOP BOLTS:
M270-50 (UN)	SEE DWG. GN1	15/16 Ø	AS NOTED

DESCRIPTION: BRACKET DETAILS

CASCO BAY STEEL STRUCTURES, INC.
1 WALLACE AVE. SOUTH PORTLAND, ME 04106
PHONE (207) 780-6722 FAX. (207) 780-6726
TENSOR 3285

STRUCTURE: TH-10 OVER OTTER CREEK PONY TRUSS BRIDGE	DRAWN: RB	DATE: 1/4/16	
	CHKD: WJL	DATE: 1/18/16	
LOCATION: RUTLAND CITY, VERMONT	JOB NO. 598	DWG NO. 26	
PROJ NO. BRF 3000 (19)		REV. △	
CUSTOMER: KUBRICKY CONSTRUCTION CORP.			

M:\... Thu, Jan 21, 2016 04:33:32 PM ...\sheets\3285-26.s Rev0

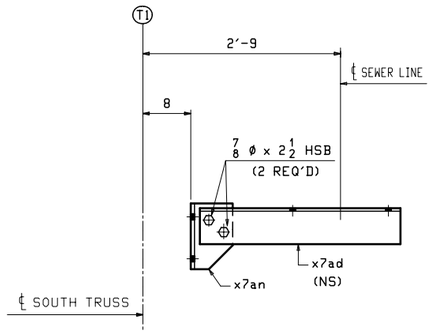

4 ~ BRACKETS ~ 27BK1

(SEWER LINE SUPPORT @ L0, L8, L9 & L19)

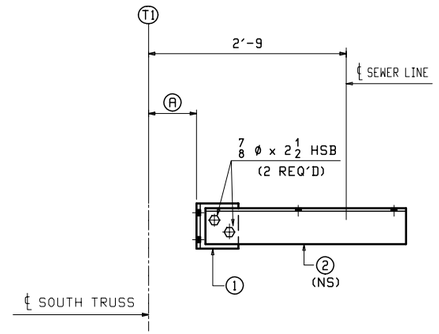

BRACKETS

(SEWER LINE SUPPORT)

	MARK	REQ'D	Ⓐ	①	②
(@ L14)	27BK2	1	8	x7ap	x7ad
(@ L1, L3, L5, L7, L10, L18)	27BK3	6	7 3/4	x7ap	x7af
(@ L12, L16)	27BK4	2	7 13/16	x7ap	x7ag
(@ L2, L4, L6)	27BK5	3	8 1/4	x7as	x7ah
(@ L11, L17)	27BK6	2	8 9/16	x7as	x7ak
(@ L13, L15)	27BK7	2	9	x7as	x7am

ABM INFO PAGE	ABM INFO LINE	SHIP MARK	QTY	MARK	BILL OF MATERIAL MATERIAL	LENGTH FT	LENGTH INCHES	JOB NO. 598 REMARKS	DRAWING NO. 27 WT	REV. PROCUREMENT NOTES
		27BK5	3		BRACKETS			SEE NOTE "G"	66	
4	W		3	x7ah	L 6x4x 1/2	2	9 1/4		45	
4	Y		3	x7as	WT 7x30.5	0	7 1/2		19	
					SHOP BOLTS					
11	E		6		7/8 ø HSB	0	2 1/2	(MECH. GALV.) A325-1	0.80	
11	Y		6		7/8 ø HSW			(MECH. GALV.) F436	0.07	
11	Z		6		LOAD IND. 7/8 ø WASH FOR HSB			(MECH. GALV.) F959	0.07	
		27BK6	2		BRACKETS			SEE NOTE "G"	65	
4	W		2	x7ak	L 6x4x 1/2	2	8 15/16		44	
4	Y		2	x7as	WT 7x30.5	0	7 1/2		19	
					SHOP BOLTS					
11	E		4		7/8 ø HSB	0	2 1/2	(MECH. GALV.) A325-1	0.80	
11	Y		4		7/8 ø HSW			(MECH. GALV.) F436	0.07	
11	Z		4		LOAD IND. 7/8 ø WASH FOR HSB			(MECH. GALV.) F959	0.07	
		27BK7	2		BRACKETS			SEE NOTE "G"	65	
4	W		2	x7am	L 6x4x 1/2	2	8 1/2		44	
4	Y		2	x7as	WT 7x30.5	0	7 1/2		19	
					SHOP BOLTS					
11	E		4		7/8 ø HSB	0	2 1/2	(MECH. GALV.) A325-1	0.80	
11	Y		4		7/8 ø HSW			(MECH. GALV.) F436	0.07	
11	Z		4		LOAD IND. 7/8 ø WASH FOR HSB			(MECH. GALV.) F959	0.07	

ABM INFO PAGE	ABM INFO LINE	SHIP MARK	QTY	MARK	BILL OF MATERIAL MATERIAL	LENGTH FT	LENGTH INCHES	JOB NO. 598 REMARKS	DRAWING NO. 27 WT	REV. PROCUREMENT NOTES
		27BK1	4		BRACKETS			SEE NOTE "G"	74	
4	W		4	x7ad	L 6x4x 1/2	2	9 1/2		45	
4	X		4	x7an	WT 7x30.5	0	10 1/2	CUT AS REQ'D	27	
					SHOP BOLTS					
11	E		8		7/8 ø HSB	0	2 1/2	(MECH. GALV.) A325-1	0.80	
11	Y		8		7/8 ø HSW			(MECH. GALV.) F436	0.07	
11	Z		8		LOAD IND. 7/8 ø WASH FOR HSB			(MECH. GALV.) F959	0.07	
		27BK2	1		BRACKETS			SEE NOTE "G"	66	
4	W		1	x7ad	L 6x4x 1/2	2	9 1/2		45	
4	Y		1	x7ap	WT 7x30.5	0	7 1/2	CUT AS REQ'D	19	
					SHOP BOLTS					
11	E		2		7/8 ø HSB	0	2 1/2	(MECH. GALV.) A325-1	0.80	
11	Y		2		7/8 ø HSW			(MECH. GALV.) F436	0.07	
11	Z		2		LOAD IND. 7/8 ø WASH FOR HSB			(MECH. GALV.) F959	0.07	
		27BK3	6		BRACKETS			SEE NOTE "G"	66	
4	W		6	x7af	L 6x4x 1/2	2	9 3/4		45	
4	Y		6	x7ap	WT 7x30.5	0	7 1/2	CUT AS REQ'D	19	
					SHOP BOLTS					
11	E		12		7/8 ø HSB	0	2 1/2	(MECH. GALV.) A325-1	0.80	
11	Y		12		7/8 ø HSW			(MECH. GALV.) F436	0.07	
11	Z		12		LOAD IND. 7/8 ø WASH FOR HSB			(MECH. GALV.) F959	0.07	
		27BK4	2		BRACKETS			SEE NOTE "G"	66	
4	W		2	x7ag	L 6x4x 1/2	2	9 11/16		45	
4	Y		2	x7ap	WT 7x30.5	0	7 1/2	CUT AS REQ'D	19	
					SHOP BOLTS					
11	E		4		7/8 ø HSB	0	2 1/2	(MECH. GALV.) A325-1	0.80	
11	Y		4		7/8 ø HSW			(MECH. GALV.) F436	0.07	
11	Z		4		LOAD IND. 7/8 ø WASH FOR HSB			(MECH. GALV.) F959	0.07	

SHOP NOTE "G"

ALL STEEL (EXCEPT FOR BOLTS) SHALL BE HOT DIP GALVANIZED IN ACCORDANCE WITH SUBSECTION 506.15.

BOLTS AND WASHERS SHALL BE MECHANICALLY GALVANIZED IN ACCORDANCE WITH ASTM B695, CLASS 55.

NOTES:

1. FOR GENERAL NOTES SEE DWG. GN1.
2. FOR STANDARD DETAILS SEE DWG. X7.
3. SHOP BOLTS SHALL BE 7/8 ø A325-1.
   ALL BOLTS SHALL BE WITH ONE HARDENED WASHER AND ONE DTI WASHER.
   BOLTS AND WASHERS SHALL BE MECHANICALLY GALVANIZED.

REV.	DATE	REMARKS	DWN	CHK	APVL	SHOP
0						

MATERIAL:	SURFACE PREP. & PAINT:	HOLES:	SHOP BOLTS:
M270-50 (UN)	SEE DWG. GN1	15/16 ø	AS NOTED

DESCRIPTION: UTILITY SUPPORTS

CASCO BAY STEEL STRUCTURES, INC.
1 WALLACE AVE.
SOUTH PORTLAND, ME 04106
PHONE (207) 780-6722
FAX. (207) 780-6726
TENSOR 3285

STRUCTURE: TH-10 OVER OTTER CREEK PONY TRUSS BRIDGE	DRAWN: RB	DATE: 1/4/16
	CHKD: WJL	DATE: 1/18/16
LOCATION: RUTLAND CITY, VERMONT	JOB NO.	DWG NO.
PROJ NO. BRF 3000 (19)	598	27
CUSTOMER: KUBRICKY CONSTRUCTION CORP.		REV. △

W2L Thu, Jan 21, 2016 04:33:44 PM /users/pbw/2015/27 - Rev0

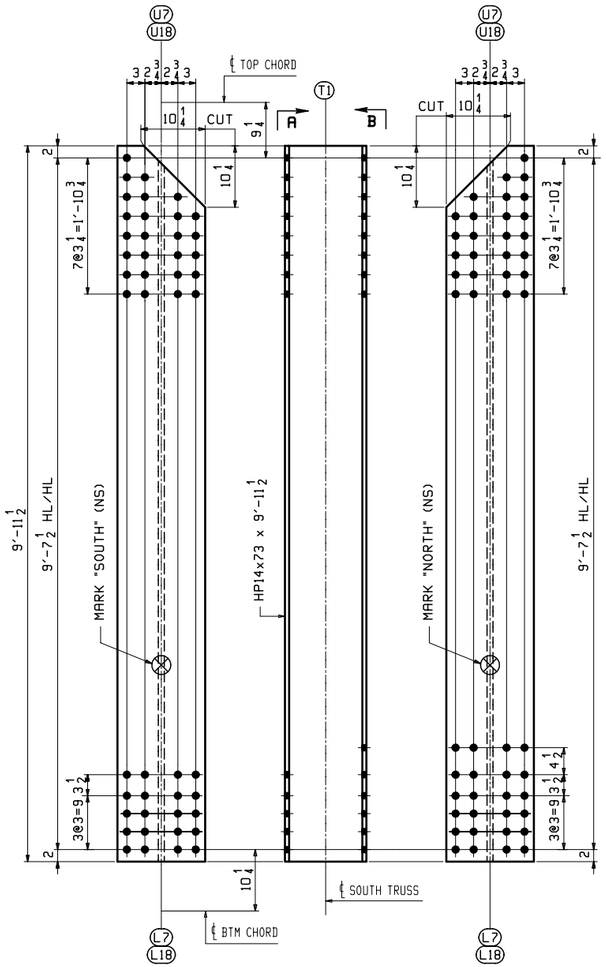

VIEW -A
(OUTER SOUTH FACE)

VIEW -B
(INSIDE NORTH FACE)

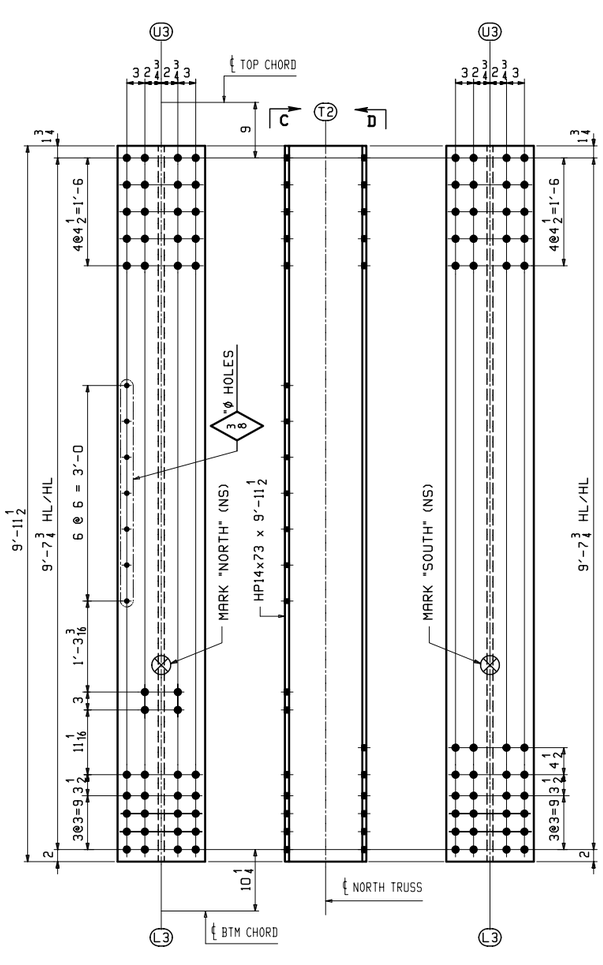

VIEW -C
(OUTER NORTH FACE)

VIEW -D
(INSIDE SOUTH FACE)

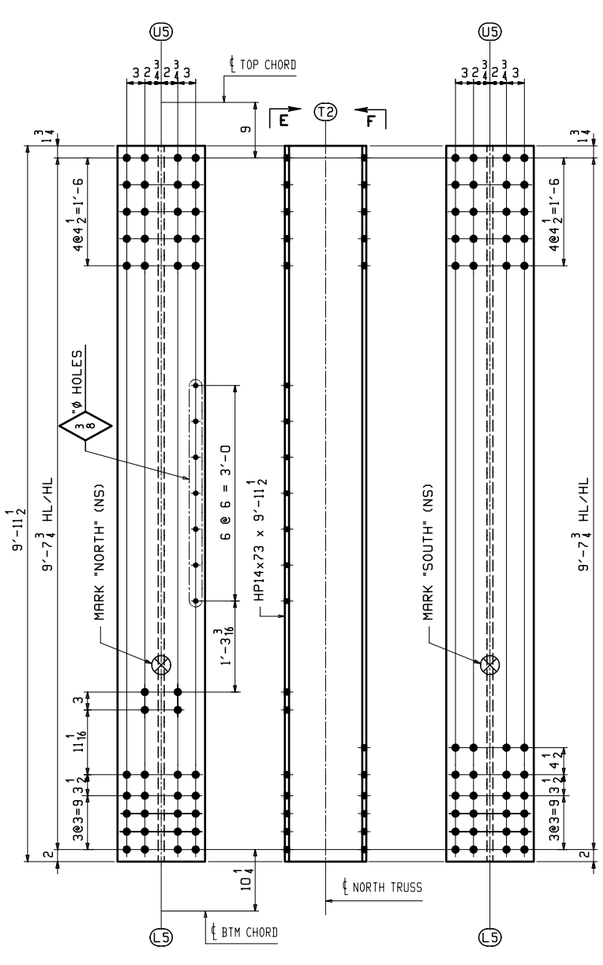

VIEW -E
(OUTER NORTH FACE)

VIEW -F
(INSIDE SOUTH FACE)

ONE ~ VERTICAL ~ 28V7S
(L7 - U7 SOUTH)

ONE ~ VERTICAL ~ 28V18S
(L18 - U18 SOUTH)

ALIKE EXCEPT FOR MARK

ONE ~ VERTICAL ~ 28V3N
(L3 - U3 NORTH)

ONE ~ VERTICAL ~ 28V5N
(L5 - U5 NORTH)

ABM INFO		SHIP	BILL OF MATERIAL					JOB NO.	DRAWING NO.	REV.
								598	28	
PAGE	LINE	MARK	QTY	MARK	MATERIAL	LENGTH FT	LENGTH INCHES	REMARKS	WT	PROCUREMENT NOTES
					VERTICALS					
1	J	28V7S	1		HP 14x73	9	11 1/2	GALV, #LIKE EXCEPT FOR MARK M270-50F2 (FCM)	727	
1	J	28V18S	1		HP 14x73	9	11 1/2	GALV. M270-50F2 (FCM)	727	
1	J	28V3N	1		HP 14x73	9	11 1/2	GALV. M270-50F2 (FCM)	727	
1	J	28V5N	1		HP 14x73	9	11 1/2	GALV. M270-50F2 (FCM)	727	

SHOP NOTE "G"

ALL STEEL SHALL BE HOT DIP GALVANIZED IN ACCORDANCE WITH SUBSECTION 506.15.

NOTES:
1. FOR GENERAL NOTES SEE DWG. GN1.
2. FCM - DENOTES FRACTURE CRITICAL MATERIAL.

REV.	DATE	REMARKS	DWN	CHK	APVL	SHOP
0						

MATERIAL:	SURFACE PREP. & PAINT:	HOLES:	SHOP BOLTS:
M270-50	SEE DWG. GN1	15/16 Ø (UN)	NONE

DESCRIPTION: TRUSS VERTICALS

CASCO BAY STEEL STRUCTURES, INC.
1 WALLACE AVE. PHONE (207) 780-6722
SOUTH PORTLAND, ME 04106 FAX. (207) 780-6726
TENSOR 3285

STRUCTURE:	TH-10 OVER OTTER CREEK PONY TRUSS BRIDGE	DRAWN: RB	DATE: 12/18/15
		CHKD: WJL	DATE: 1/18/16
LOCATION:	RUTLAND CITY, VERMONT	JOB NO. 598	DWG NO. 28
PROJ NO.	BRF 3000 (19)		REV. △
CUSTOMER:	KUBRICKY CONSTRUCTION CORP.		

Fri, Jan 22, 2016 10:54:48 AM //ascv/jobs/3285/28 - Rev0
RB

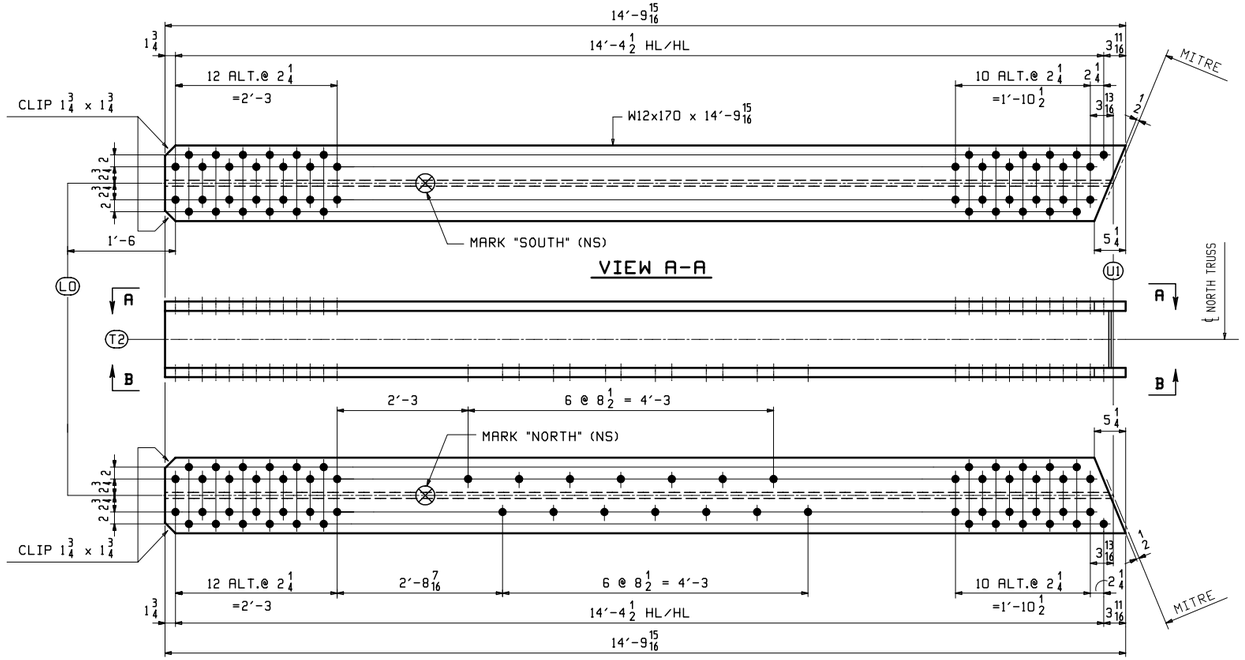

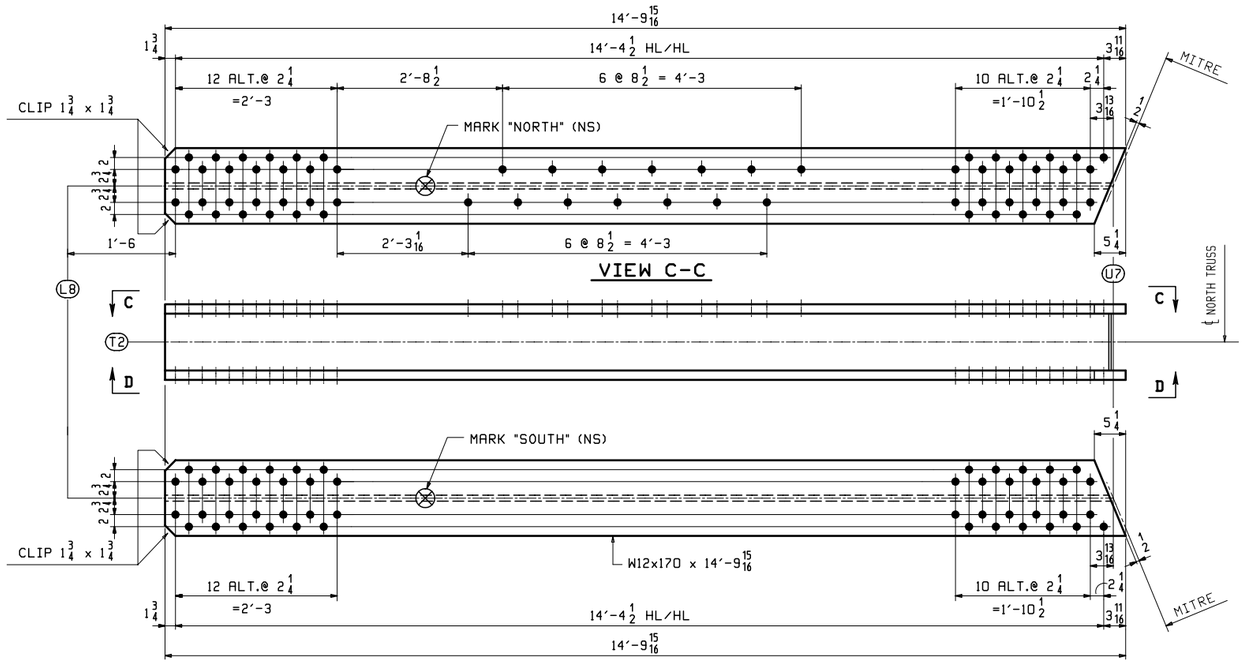

ABM INFO		SHIP	BILL OF MATERIAL					JOB NO.	DRAWING NO.	REV.
								598	29	
PAGE	LINE	MARK	QTY	MARK	MATERIAL	LENGTH FT	LENGTH INCHES	REMARKS	WT	PROCUREMENT NOTES
					DIAGONALS					
1	L	29LOUIN	1		W 12x170	14	9 15/16	GALV. M270-50T2 (CVN)	2521	
1	L	29L8U7N	1		W 12x170	14	9 15/16	GALV. M270-50T2 (CVN)	2521	

SHOP NOTE "G"

ALL STEEL SHALL BE HOT DIP GALVANIZED IN ACCORDANCE WITH SUBSECTION 506.15.

NOTES:
1. FOR GENERAL NOTES SEE DWG. GN1.
2. CVN - DENOTES MATERIAL SUBJECT TO CHARPY V-NOTCH TESTING.

REV.	DATE	REMARKS	DWN	CHK	APVL	SHOP
0						

MATERIAL:	SURFACE PREP. & PAINT:	HOLES:	SHOP BOLTS:
M270-50	SEE DWG. GN1	15/16ø	NONE

DESCRIPTION: TRUSS DIAGONALS

CASCO BAY STEEL STRUCTURES, INC.
1 WALLACE AVE. SOUTH PORTLAND, ME 04106
PHONE (207) 780-6722 FAX. (207) 780-6726
TENSOR 3285

STRUCTURE:	DRAWN:	DATE:
TH-10 OVER OTTER CREEK PONY TRUSS BRIDGE	RB	12/19/15
	CHKD: WJL	DATE: 1/19/16
LOCATION: RUTLAND CITY, VERMONT	JOB NO.	DWG NO.
PROJ NO. BRF 3000 (19)	598	29
CUSTOMER: KUBRICKY CONSTRUCTION CORP.		REV. △

WJL Thu, Jan 21, 2016 04:36:01 PM c:\users\wjl\e-29\29-1 Rev0

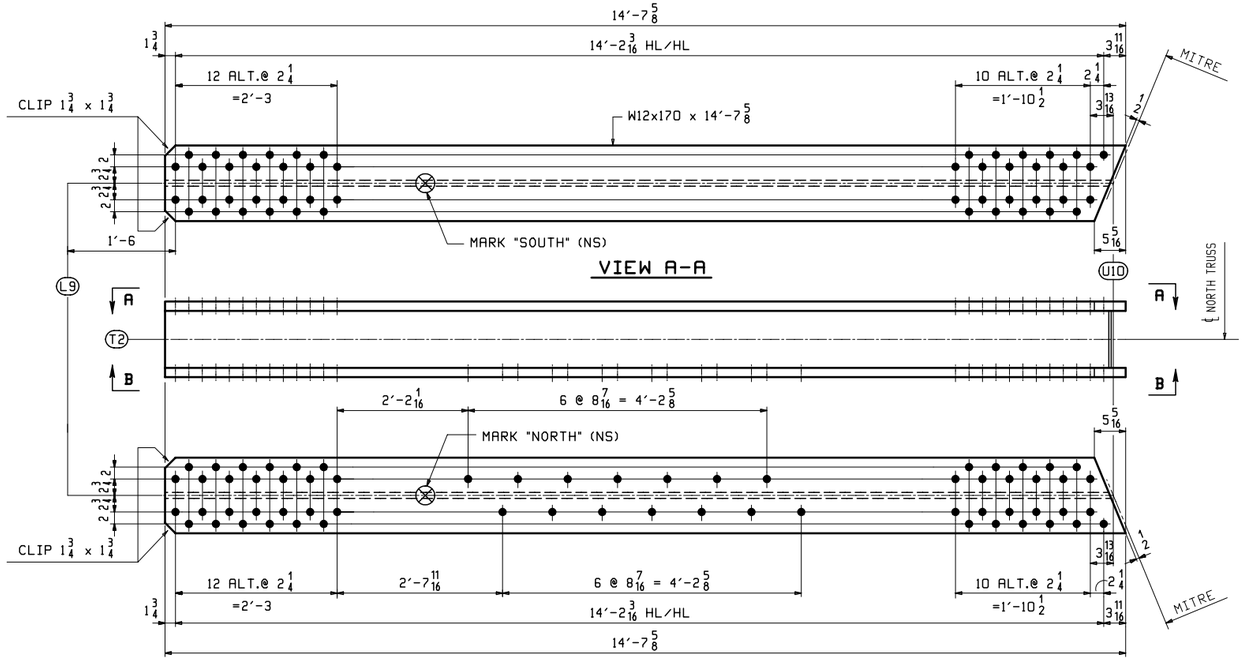

VIEW A-A

VIEW B-B

ONE ~ DIAGONAL ~ 30L9U10N

(L9 - U10 NORTH)

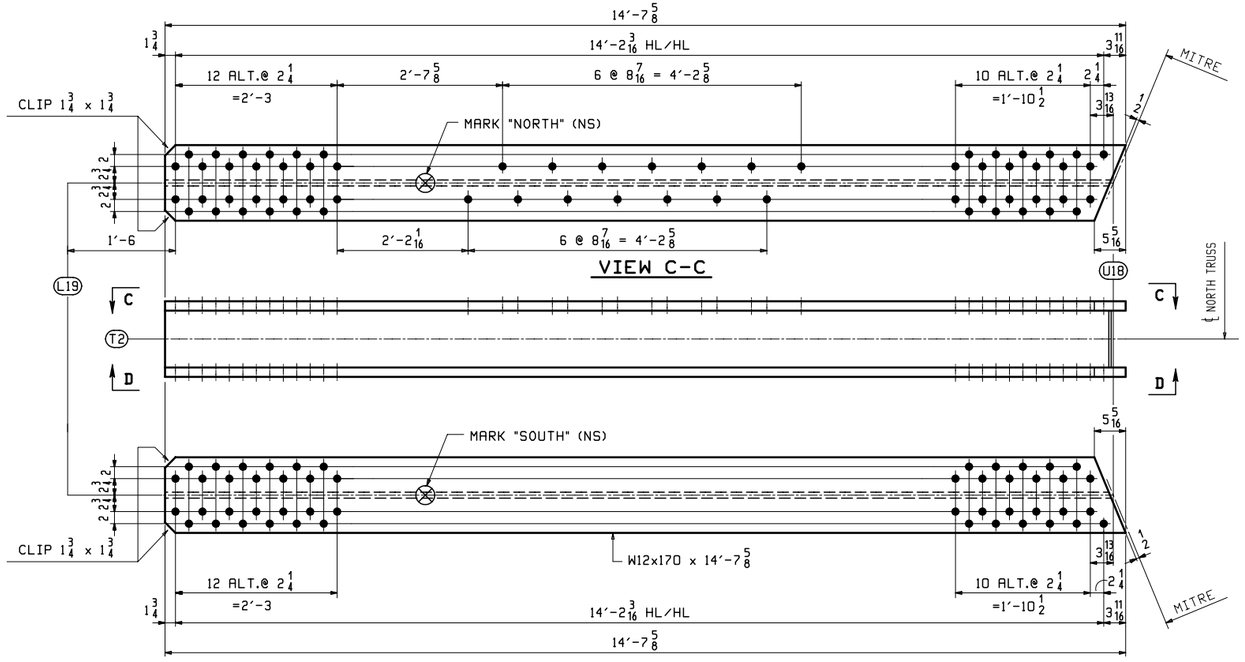

VIEW C-C

VIEW D-D

ONE ~ DIAGONAL ~ 30L19U18N

(L19 - U18 NORTH)

ABM INFO		SHIP	BILL OF MATERIAL					JOB NO.	DRAWING NO.	REV.
								598	30	
PAGE	LINE	MARK	QTY	MARK	MATERIAL	LENGTH FT	LENGTH INCHES	REMARKS	WT	PROCUREMENT NOTES
					DIAGONALS					
1	M	30L9U10N	1		W 12x170	14	7 5/8	GALV. M270-50T2 (CVN)	2488	
1	M	30L19U18N	1		W 12x170	14	7 5/8	GALV. M270-50T2 (CVN)	2488	

SHOP NOTE "G"

ALL STEEL SHALL BE HOT DIP GALVANIZED IN ACCORDANCE WITH SUBSECTION 506.15.

NOTES:
1. FOR GENERAL NOTES SEE DWG. GN1.
2. CVN - DENOTES MATERIAL SUBJECT TO CHARPY V-NOTCH TESTING.

REV.	DATE	REMARKS	DWN	CHK	APVL	SHOP
0						

MATERIAL:	SURFACE PREP. & PAINT:	HOLES:	SHOP BOLTS:
M270-50	SEE DWG. GN1	15/16ø	NONE

DESCRIPTION: TRUSS DIAGONALS

CASCO BAY STEEL STRUCTURES, INC.
1 WALLACE AVE. SOUTH PORTLAND, ME 04106
PHONE (207) 780-6722 FAX. (207) 780-6726
TENSOR 3285

STRUCTURE: TH-10 OVER OTTER CREEK PONY TRUSS BRIDGE	DRAWN: RB	DATE: 12/19/15	
	CHKD: WJL	DATE: 1/19/16	
LOCATION: RUTLAND CITY, VERMONT	JOB NO.	DWG NO.	
PROJ NO. BRF 3000 (19)	598	30	
CUSTOMER: KUBRICKY CONSTRUCTION CORP.		REV. △	

WJL Thu, Jan 21, 2016 04:30:17 PM c:\users\wjl\e\3285\30\30-1.dwg