KUBRICKY CONSTRUCTION CORP
269 BALLARD ROAD

WILTON, NY 12831
518 792-5864

KUBRICKY CONSTRUCTION CORP.
A PROUD MEMBER OF THE D.A. COLLINS™ COMPANIES
An Equal Opportunity Employer

Rutland City BRF 3000 (2014036)
SUBMITTAL 2

Issued **11/04/14**
Respond by 11/11/14

To

Timothy Pockette, PE

Topic	Pile Point Reinforcement Submittal & Weld Procedure
Status	For Approval
Spec section	505.04(f)
Sent to approver	11/4/14
Required from approver	11/11/14

From

Volker Burkowski

Signed by _____ Date 11/4/14

Proceed as Indicated _____ Date _____
Owner Authorized Representative

ASSOCIATED PILE & FITTING LLC

BOX 1048, CLIFTON, NJ 07014-1048 ■ TEL: 973-773-8400 ■ FAX: 973-773-8442
EMAIL: APF@ASSOCIATEDPILE.COM ■ WEBSITE: WWW.ASSOCIATEDPILE.COM
CALL TOLL FREE 800-526-9047

HARD-BITE™

Dimensions

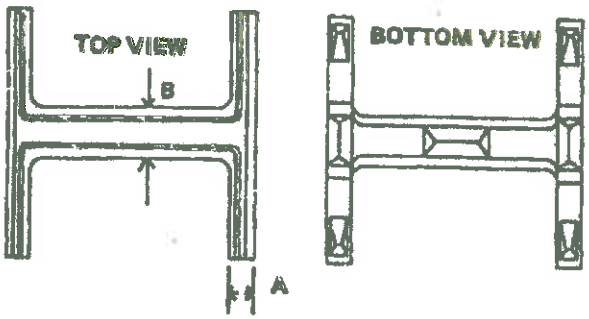

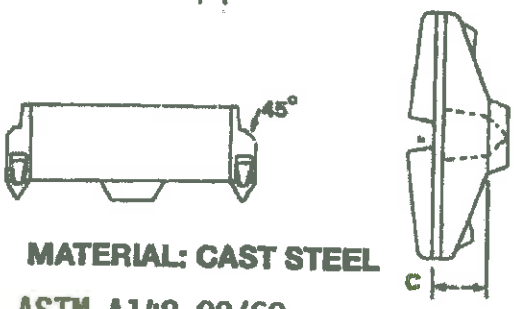

MATERIAL: CAST STEEL

ASTM A148 90/60

	12"
A	1"
B	1-5/16"
C	3"

Installation Instructions

HARD-BITE POINT MODEL HP-77600-B-30#

1. Fit point onto the end of a square cut pile end.
2. Weld point to the pile in either flat or vertical position using E70XX electrodes.
3. Weld across full width of flange following chart below for minimum size weld.

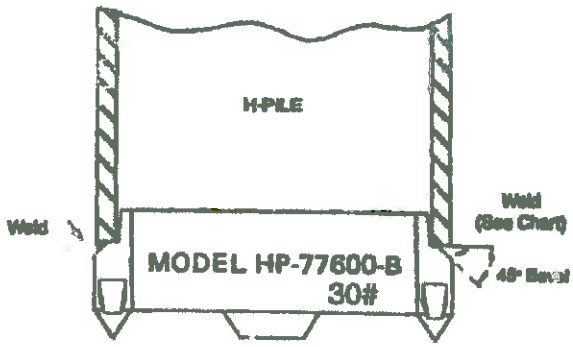

Pile Size	Flange Thickness	Min. Size Groove Weld
HP 12 x 84	.685	3/8
x 74	.610	3/8
x 63	.515	5/16
x 53	.435	5/16

ASSOCIATED PILE & FITTING LLC

BOX 1048, CLIFTON, NJ 07014-1048 ■ TEL: 973-773-8400 ■ FAX: 973-773-8442
EMAIL: APF@ASSOCIATEDPILE.COM ■ WEBSITE: WWW.ASSOCIATEDPILE.COM
CALL TOLL FREE 800-526-9047

HARD-BITE™

Dimensions

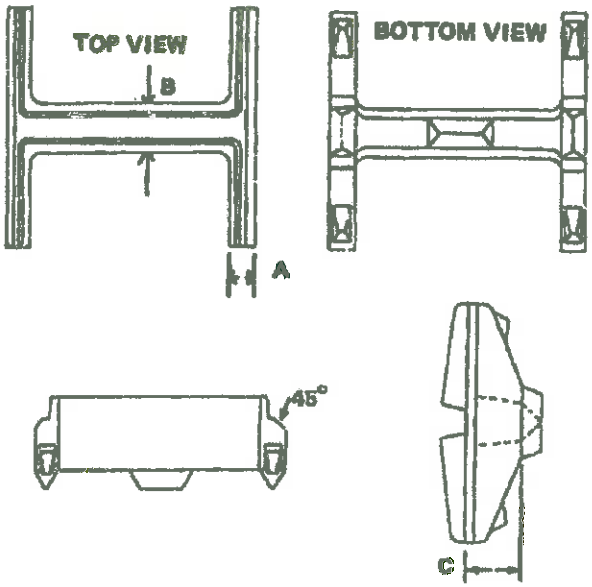

MATERIAL: CAST STEEL

ASTM A148 90/60

	14"
A	1-1/2"
B	1-3/4"
C	3"

Installation Instructions

HARD-BITE POINT MODEL HP-77600-B-46#

1. Fit point onto the end of a square cut pile end.
2. Weld point to the pile in either flat or vertical position using E70XX electrodes.
3. Weld across full width of flange following chart below for minimum size weld.

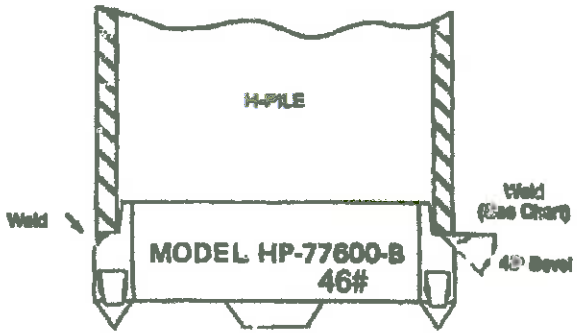

Pile Size	Flange Thickness	Min. Size Groove Weld
HP 14 x 117	.805	7/16
x 102	.705	3/8
x 89	.615	3/8
x 73	.505	5/16

[illegible] SPECIFICATION

Material specification: A-572 Grade 50 pile to cast steel tip

Welding process: SMAW

Manual, semiautomatic or automatic: Manual

Position of welding: Flat

Filler metal specification AWS: F1A 5.1

Filler metal classification: E7024

Electrode and manufacturer: E7024-1 Lincoln

Flux and manufacturer: N/A

Shielding gas: N/A Gas pulse: N/A Flow rate: N/A

Single or multiple pass: multiple

Single or multiple arc: single

Welding current: DC

Polarity: +

Welding progression: Stringer

Root treatment: Clean to remove contaminants

Ambient and interpass temperature: 250° F

Postheat treatment: N/A

VOLTS & PROCEDURE

Pass no.	Electrode size	Welding parameters: Amperes	Welding parameters: Volts	Travel speed	Joint detail
All	3/16	220-280			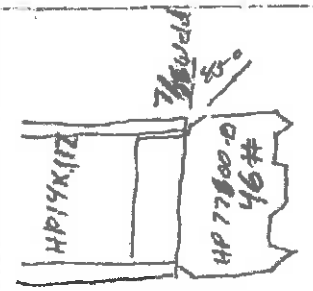

Sequence of weld passes shall be shown diagrammatically

Weld passes are may have due to restriction sequence, fit-up, pass size, etc., within the limitation of variables given in Section 8A.

Procedure no. JW-TM6 Fabricator or Erector: Jimmy's Welding

Revision no. Authorized by

10-29-14

WELDING PROCEDURE SPECIFICATION

Material specification: A-572 Grade 50 pile to cast steel tip.

Welding process: SMAW

Manual, semiautomatic or automatic: Manual

Position of welding: Flat

Filler metal specification: F1A 5.1

Filler metal specification: E7024

Electrode specification: E7024-1 Lincoln

Flux specification: N/A

Shielding gas: N/A Flow rate: N/A Flow rate: N/A

Single or multiple pass: multiple

Single or multiple arc: single

Welding current: DC

Polarity: +

Welding progression: Stringer

Root treatment: Clean to remove contaminants

Preheat and interpass temperature: 250° F

Postheat treatment: N/A

WELDING PROCEDURE

Pass No.	Electrode size	Welding parameters Amperes	Volts	Travel speed	Joint detail
All	3/16	220-280			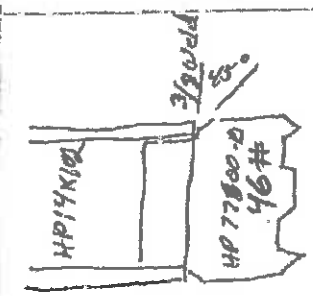

Sequence of weld passes shall be shown in a sketch.

This procedure may vary due to fabrication sequence, fit-up, pass sequence, etc., with the limitation of variables given in Section 8A.

Procedure no.: JW-TM6

Fabricator or Erector: Jimmy's Welding

Revision no.:

Authorized by:

Date: 10-29-14

BD 180 (1/01)

WELDING PROCEDURE SPECIFICATION

Material specification: A-572 Grade 50 pile to cast steel tip

Welding process: SMAW

Manual, semi-automatic or automatic: Manual

Position of welding: Flat

Filler metal specification AWS: FIA 5.1

Filler metal classification: E7024

Electrode and manufacturer: E7024-1 Lincoln

Flux and manufacturer: N/A

Shielding gas: N/A Composition: N/A Flow rate: N/A

Single or multiple pass: Multiple

Single or multiple arc: Single

Welding current: DC

Polarity: +

Welding progression: Stringer

Root treatment: Clean or remove contaminants

Preheat and interpass temperature: 250° F

Postheat treatment: N/A

WELDING PROCEDURE

Pass no.	Electrode size	Welding current Amps	Volts	Travel speed	Joint detail
All	3/16	220-280			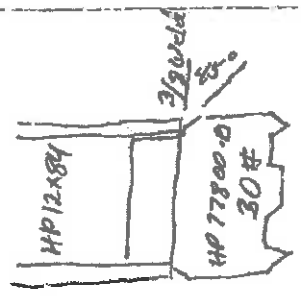

Sequence of weld passes shall be shown diagrammatically.

This procedure may vary due to fabrication sequence, fit-up, pass size, etc., within the limits of variables given in Section 8A.

Procedure no. JW-TM6 Fabricator or Erector: Jimmy's Welding

Revision no. Authorized by

Date 10-29-14

SINCE 1881

FROEHLING & ROBERTSON, INC.

Engineering • Environmental • Geotechnical

3015 Dumbarton Road
Richmond, VA 23228 I USA
T 804-264-2701 I F 804-264-3549

File No. 60N-0427
Certificate No. 21270
Date: September 29, 2014

WELDER QUALIFICATION TEST RECORD

Client: Jimmy's Certified Welding & Machining, Inc. 23600 Airport Road, Petersburg VA 23803 Attn: Jimmy Dice

Name: Mike Maddox — SS / ID No.: XXX-XX-0351

Welding Procedure Specification/Code: AWS B2.1-016-94R/AWS D1.5-2008

Welding Process/Type: Shielded Metal Arc Welding (SMAW) — Single/Multiple Electrode: Single

Weld Joint: Single-V-Groove - Fig. 4.30 — Backing: Carbon Steel

Test Position(s): 3G Vertical & 4G Overhead — Weld Progression: Uphill

Material Specification: ASTM A-36 — P-No.: 1

Joint Thickness/Diameter: 1" Plate

Filler Metal Specification: A5.1 — Classification: E7018 — F-No.: 4

Filler Metal Diameter/Trade Name: 1/8 Excalibur Rod

Current/Polarity: DCEP — Amperage: 120-125 — Voltage: 22-24

Preheat: None — Postheat: None — Method of Cleaning: Chip/ Brush — No. of Passes: Multiple

Location of Test: F&R Laboratory — Date: September 29, 2014

Witnessing Inspector: Marcus Swailes AWS CWI #03091981 — Branch: Richmond

	PLATE	PIPE OR TUBING
Positions Qualified	G-All F – All	G –All F – All
Thickness Range Qualified	G – 1/8" to Unlimited F – Unlimited	G-1/8" to Unlimited F – Unlimited
Diameter Range Qualified	N/A	Pipe Over 24" in Diameter
Other	G: With backing or back-gouging G: All positions for Plug and Slot Welds	Tube: Complete joint penetration. Not qualified for joints welded from one side without backing or welded from two sides without back gouging. Qualified for partial joint penetration on groove welds for T, Y and K connections.

KEY: F – Fillet G – Groove 1 – Flat (F) 2 – Horizontal (H) 3 – Vertical (V) 4 – Overhead (O)

RADIOGRAPHIC RESULTS					
IDENTIFICATION	RESULTS	REMARKS	IDENTIFICATION	RESULTS	REMARKS
MM-0351- 3G	Satisfactory	No Defects			
MM-0351-4G	Satisfactory	No Defects			

Test Conducted By: Froehling & Robertson, Inc., (M. Swailes) — Laboratory Test No.: 120395

Per: AWS D1.5-08, Section 4, Part B — Date: September 29, 2014

We, the undersigned, certify that the statements in this record are correct to the best of our knowledge and belief; and that the welds were prepared and tested in accordance with the requirements of AWS D1.5-08, Section 4, Part B

Signature: Marcus Swailes

Printed Name and Title: Certified Welding Inspector

Marcus R Swailes
CWI 03091981
QC1 EXP 9/1/2015

Form No. 601 (rev 7/08)

SINCE 1881

FROEHLING & ROBERTSON, INC.

Engineering • Environmental • Geotechnical

3015 Dumbarton Road
Richmond, VA 23228 I USA
T 804-264-2701 I F 804-264-3549

File No. 60N-0427
Certificate No. 21133
Date: August 19, 2013

WELDER QUALIFICATION TEST RECORD

Client: Jimmy's Certified Welding & Machining, Inc. 23600 Airport Road, Petersburg VA 23803 Attn: Jimmy Dice

Name: Clifton VanDunk — SS / ID No.: XXX-XX-8829

Welding Procedure Specification/Code: AWS B2.1-016-94R/AWS D1.5-2008

Welding Process/Type: Shielded Metal Arc Welding (SMAW) — Single/Multiple Electrode: Single

Weld Joint: Single-V-Groove - Fig. 4.30 — Backing: Carbon Steel

Test Position(s): 3G Vertical & 4G Overhead — Weld Progression: Uphill

Material Specification: ASTM A-36 — P-No.: 1

Joint Thickness/Diameter: 1" Plate

Filler Metal Specification: A5.1 — Classification: E7018 — F-No.: 4

Filler Metal Diameter/Trade Name: 1/8 Lincoln

Current/Polarity: DCEP — Amperage: 110-115 — Voltage: 22-24

Preheat: None — Postheat: None — Method of Cleaning: Chip/ Brush — No. of Passes: Multiple

Location of Test: F&R Laboratory — Date: August 19, 2013

Witnessing Inspector: Marcus Swailes AWS CWI #03091981 — Branch: Richmond

Visual Exam: Acceptable

	PLATE	PIPE OR TUBING
Positions Qualified	G-All F – All	G –All F – All
Thickness Range Qualified	G – 1/8" to Unlimited F – Unlimited	G-1/8" to Unlimited F – Unlimited
Diameter Range Qualified	N/A	Pipe Over 24" in Diameter
Other	G: With backing or back-gouging G: All positions for Plug and Slot Welds	Tube: Complete joint penetration. Not qualified for joints welded from one side without backing or welded from two sides without back gouging. Qualified for partial joint penetration on groove welds for T, Y and K connections.

KEY: F – Fillet G – Groove 1 – Flat (F) 2 – Horizontal (H) 3 – Vertical (V) 4 – Overhead (O)

RADIOGRAPHIC RESULTS

IDENTIFICATION	RESULTS	REMARKS	IDENTIFICATION	RESULTS	REMARKS
CV-8829- 3G	Satisfactory	No Defects			
CV-8829-4G	Satisfactory	No Defects			

Test Conducted By: Froehling & Robertson, Inc., (M. Swailes) — Laboratory Test No.: 118381

Per: AWS D1.5-08, Section 4, Part B — Date: August 19, 2013

We, the undersigned, certify that the statements in this record are correct to the best of our knowledge and belief; and that the welds were prepared and tested in accordance with the requirements of AWS D1.5-08, Section 4, Part B

Signature: Marcus Swailes

Printed Name and Title: Certified Welding Inspector

Marcus R Swailes
CWI 03091981
QC1 EXP 8/1/2015