KUBRICKY CONSTRUCTION CORP.
269 BALLARD ROAD

WILTON, NY 12831
518 792-5864

KUBRICKY CONSTRUCTION CORP.
A PROUD MEMBER OF THE D.A. COLLINS™ COMPANIES

Rutland City BRF 3000 (2014036)
SUBMITTAL 47.1

Issued 04/29/15
Respond by 05/05/15

To

Timothy Pockette, PE

Topic	900.645 Precast Flapper Valve Headwall RESUBMITTAL
Status	For Approval
Spec section	900.645
Responsibility	(16) River Street
Received from submitter	4/29/15
Sent to approver	4/29/15
Required from approver	5/5/15

From

Volker H.D. Burkowski

Signed by _____ Date 4/29/15

Proceed as Indicated _____ Date _____
Owner Authorized Representative

S.D. Ireland Companies
Precast Division

193 Industrial Ave. Williston, VT 05495
P.O. Box 2286 South Burlington, VT 05407
p: 802-863-6222 f: 802-860-1528
www.sdireland.com

NPCA CERTIFIED PLANT

CERTIFIED PCI PLANT

Attention:	Niall Buxton	Date:	4/28/2015
Company:	Champlain Constr	Job Name:	Rutland City BRF 3000(16) River St
Address:		Job Number:	SDI 15790
City, St, Zip:		Regarding:	Headwall revised submittal
Ph: / Fax:			

WE ARE SENDING:

- [ ] Quote
- [ ] Details
- [ ] Other: _____
- [x] Submittals
- [ ] Prints
- [ ] Plans
- [ ] Specifications
- [ ] Copy Of Letter
- [ ] Change Order
- [ ] Samples
- [ ] Revised Submittals

Copies	Date	Pages	Description
1	4/28/2015	1	Transmittal Cover
1	4/28/2015	7	Project Cover pg, Dorr Dr. headwall location, D-33 standard, headwall detail, mix design, lift devices

These Are Submitted as Checked Below:

- [x] For Approval
- [ ] Approved as Submitted
- [ ] Resubmit __ Copies for Approval
- [ ] For Your Use
- [ ] Approved as Noted
- [ ] Submit__ Copies for Distribution
- [ ] As Requested
- [ ] Returned for Corrections
- [ ] Return __ Corrected Prints
- [ ] For Review and Comment
- [ ] Prints Returned After Loan to Us
- [ ] For Bids Due: _____
- [ ] Other:

Notes/Remarks:

This submittal replaces previous submittal, utilizing the Vermont State AOT standard detail for precast headwall design.

Thank you.
Tim Dudley, S D Ireland Precast Div, 802-863-6222, ext 253,
tdudley@sdireland.com

Copy To: _____

Signed: _____

If enclosures are not as noted, kindly notify us at once.

PROJECT DESCRIPTION : CONSTRUCT NEW TWO SPAN GIRDER BRIDGE ON THE NORTH SIDE OF THE EXISTING TWO SPAN TRUSS BRIDGE. TH-8 REQUIRES REALIGNMENT AND ROADWORK RELATIVE TO THE BRIDGE. TH-10 REQUIRES REALIGNMENT AND ROADWORK. EXISTING BRIDGE WILL BE REMOVED AFTER PROPOSED BRIDGE IS CONSTRUCTED.

STATE OF VERMONT
AGENCY OF TRANSPORTATION

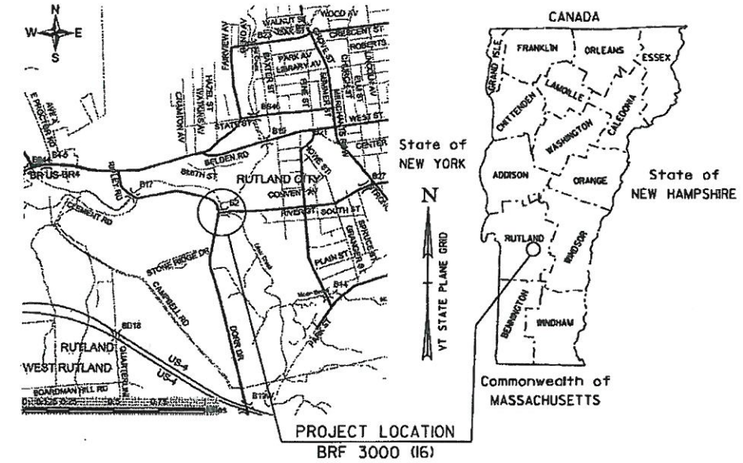

PROPOSED IMPROVEMENT
BRIDGE PROJECT

CITY OF RUTLAND
COUNTY OF RUTLAND

ROUTE NO : TH 8 (RIVER STREET) Urban Collector - FAU 3052
TH 10 (DORR DRIVE) Urban Collector- FAU 3008
BRIDGE NO : 2 (TH 8)

BEGINNING AT THE INTERSECTION OF DORR DR (TH 10) AND RIVER ST (TH 8) AND EXTENDING EASTERLY ALONG RIVER ST (TH 8), 0.15 MILES.

BEGINNING ON DORR DR (TH 10) AT A POINT 0.06 MILES NORTH OF THE INTERSECTION OF RIVER ST (TH 8) AND DORR DR (TH 10) AND EXTENDING SOUTHERLY ALONG DORR DR 0.11 MILES

LENGTH OF STRUCTURE : TH-8 = 279.45 FT
LENGTH OF ROADWAY : TH-8 = 520.55 FT + TH-10 = 566 FT
LENGTH OF PROJECT : = 1,366 FT

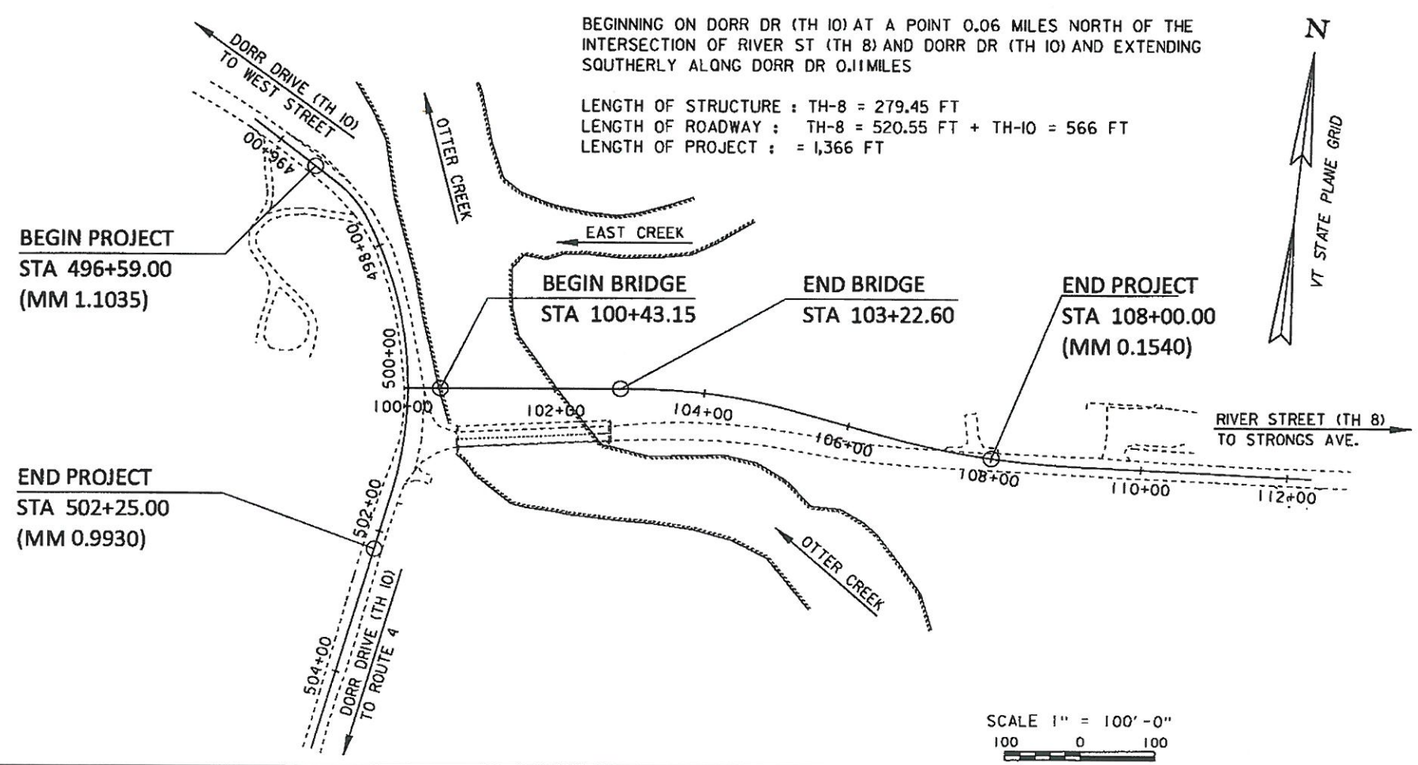

CONSTRUCTION IS TO BE CARRIED ON IN ACCORDANCE WITH THESE PLANS AND THE STANDARD SPECIFICATIONS FOR CONSTRUCTION DATED 2011, AS APPROVED BY THE FEDERAL HIGHWAY ADMINISTRATION ON JULY 20, 2011 FOR USE ON THIS PROJECT, INCLUDING ALL SUBSEQUENT REVISIONS AND SUCH REVISED SPECIFICATIONS AND SPECIAL PROVISIONS AS ARE INCORPORATED IN THESE PLANS.

QUALITY ASSURANCE PROGRAM : LEVEL 2	
SURVEYED BY :	L. ORVIS
SURVEYED DATE :	MARCH 2000
DATUM	
VERTICAL	NAVD 88
HORIZONTAL	NAD 83 (92)

PROJECT MANAGER : CAROLYN CARLSON

PROJECT NAME : RUTLAND CITY
PROJECT NUMBER : BRF 3000 (16)

SHEET 122 OF 245 SHEETS

ALL FENCE ITEMS
SEE ROADWAY LAYOUTS

ELECTRICAL CONDUIT
SEE UTILITY PLANS

SPECIAL PROVISION (C-900 PVC, ALL-INCLUSIVE) (12" SEWER OVERFLOW)
500+92.5 TO 501+29.4 LT (OVERFLOW)

SPECIAL PROVISION (FLAPPER VALVE AND HEADWALL)
500+92.5 LT

SPECIAL PROVISION (EMERGENCY BACKUP PORT)
501+23.3 LT

GATE VALVE WITH VALVE BOX
501+23.3 LT (6") (2) (FOR EMERGENCY BACKUP PORT)

REHAB. DROP INLETS, CATCH BASINS, OR MANHOLES, CLASS III
CAST IRON COVER WITH FRAME, SEWER
501+36.1 LT

SPECIAL PROVISION (TRANSITE PIPE REMOVAL)
500+92.5 TO 501+29.4 LT

VT STATE PLANE GRID

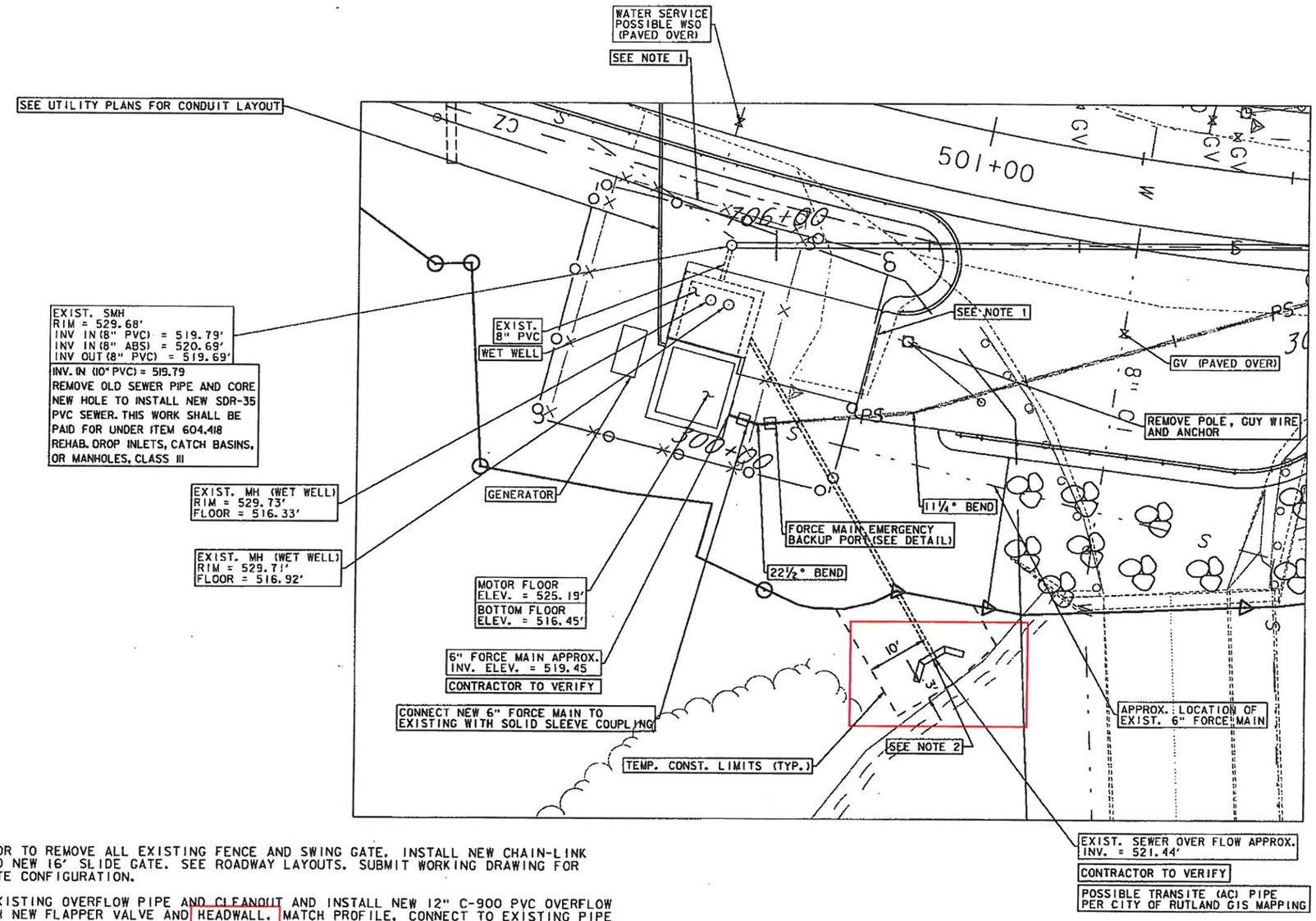

NOTES:

1. CONTRACTOR TO REMOVE ALL EXISTING FENCE AND SWING GATE. INSTALL NEW CHAIN-LINK FENCE AND NEW 16' SLIDE GATE. SEE ROADWAY LAYOUTS. SUBMIT WORKING DRAWING FOR SLIDE GATE CONFIGURATION.
2. REMOVE EXISTING OVERFLOW PIPE AND CLEANOUT AND INSTALL NEW 12" C-900 PVC OVERFLOW PIPE WITH NEW FLAPPER VALVE AND HEADWALL. MATCH PROFILE. CONNECT TO EXISTING PIPE WITH SOLID SLEEVE COUPLING APPROX. 2' TO 4' OUTSIDE WET WELL. SEE FLAPPER VALVE AND HEADWALL DETAIL.

0 10 20
(SCALE 1" = 10')

STATE OF VERMONT
DAVID A. LEWIS
NO. 013-0020410
Civil
LICENSED
PROFESSIONAL ENGINEER

WATER AND SEWER PLANS

CONSULTING ENGINEERS
540 Commercial Street, Manchester, NH 03101
(603) 668-8223 - Fax: (603) 668-8802
cld@cldengineers.com • www.cldengineers.com
Maine • New Hampshire • Vermont

PROJECT NAME: RUTLAND CITY
PROJECT NUMBER: BRF 3000 (16)

FILE NAME: z94J092bdrswr.dgn
PROJECT LEADER: C. BEAN
DESIGNED BY: D. LEWIS
DORR DRIVE PUMP STATION PLAN

PLOT DATE: 6/17/2014
DRAWN BY: W. GORDON
CHECKED BY: S. REICHERT
SHEET 14 OF 22

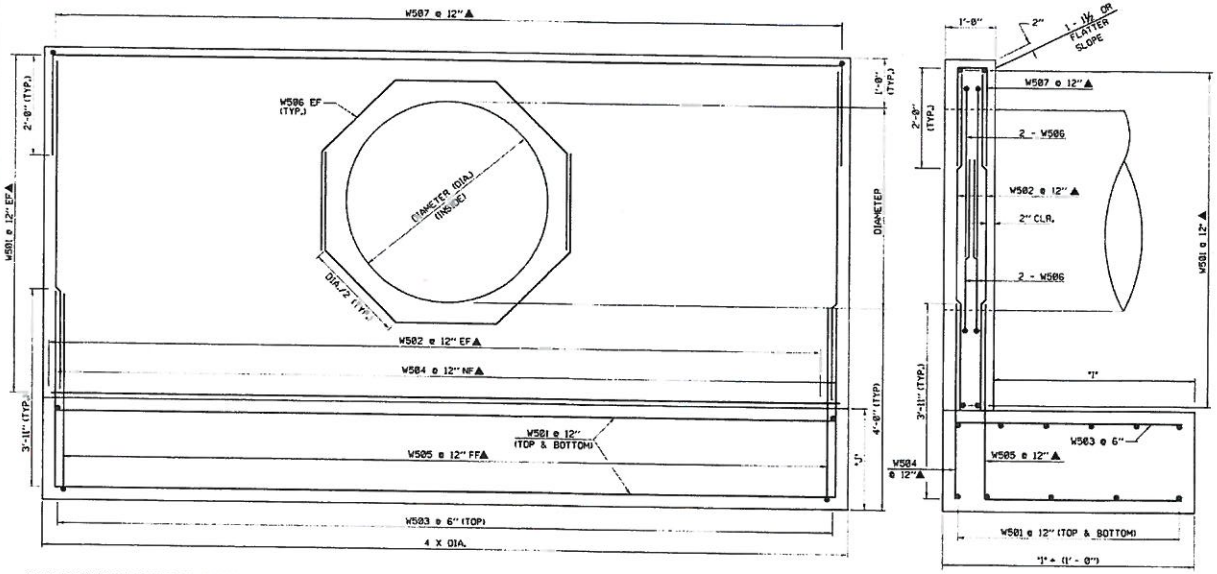

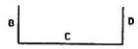

REBAR TYPE: 17

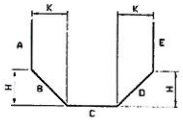

REBAR TYPE: 14

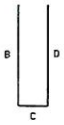

REBAR TYPE: S10

DESIGN CRITERIA

1. ASSUMED ALLOWABLE LOAD FOR SPREAD FOOTINGS
   - ON SOIL: 4 KSF
   - ON LEDGE: 10 KSF
2. REINFORCING STEEL GRADE: 60 KSI
3. CONCRETE CLASS B: 3500 PSI
4. SOIL UNIT WEIGHT: 140 PSF
5. ASSUMED FOOTING FRICTION COEFFICIENT: 0.55
6. SOIL FRICTION ANGLE: 33.67°
7. DEDUCT VOLUME OF PIPE.
8. ALL EXPOSED EDGES WILL BE CHAMFERED ONE INCH.
9. ALL REBAR CLEARANCES SHALL BE 3 INCHES UNLESS OTHERWISE NOTED.
10. CONSTRUCTION JOINT SURFACE SHALL BE ROUGH.

REBAR NOTES:

NF = NEAR FACE
FF = FAR FACE
EF = EACH FACE
▲ = CUT TO FIT IN FIELD

STEEL SCHEDULE FOR REINFORCED CONCRETE HEADWALL DIA. 48"

ITEM	EACH	SIZE	LENGTH	MARK	TYPE	A	B	C	D	E	H	K
1	28	5	15'-6"	W501	STR.							
2	34	5	6'-9"	W502	STR.							
3	33	5	4'-6"	W503	STR.							
4	17	5	3'-11"	W504	STR.							
5	17	5	7'-10"	W505	17		3'-11"	3'-11"	—			
6	4	5		W506	14	2'-0"	2'-0"	2'-0"	2'-0"	2'-0"	1'-5"	1'-5"
7	17	5		W507	S10		2'-0"	0'-7"	2'-0"			

STEEL SCHEDULE FOR REINFORCED CONCRETE HEADWALL DIA. 42"

ITEM	EACH	SIZE	LENGTH	MARK	TYPE	A	B	C	D	E	H	K
1	26	5	13'-6"	W501	STR.							
2	30	5	6'-3"	W502	STR.							
3	29	5	4'-6"	W503	STR.							
4	15	5	3'-11"	W504	STR.							
5	15	5	7'-10"	W505	17		3'-11"	3'-11"	—			
6	4	5		W506	14	1'-9"	1'-9"	1'-9"	1'-9"	1'-9"	1'-2⅞"	1'-2⅞"
7	15	5		W507	S10		2'-0"	0'-7"	2'-0"			

STEEL SCHEDULE FOR REINFORCED CONCRETE HEADWALL DIA. 36"

ITEM	EACH	SIZE	LENGTH	MARK	TYPE	A	B	C	D	E	H	K
1	24	5	11'-6"	W501	STR.							
2	26	5	6'-3"	W502	STR.							
3	25	5	4'-0"	W503	STR.							
4	13	5	3'-11"	W504	STR.							
5	13	5	7'-4"	W505	17		3'-11"	3'-5"	—			
6	4	5		W506	14	1'-6"	1'-6"	1'-6"	1'-6"	1'-6"	1'-0¾"	1'-0¾"
7	13	5		W507	S10		2'-0"	0'-7"	2'-0"			

PIPE DIAMETER	48"	42"	36"	30"	24"	18"	
DIMENSION "I"	48"	48"	42"	42"	36"	36"	12"
DIMENSION "J"	24"	24"	18"	18"	12"	12"	36"
CONCRETE QUANTITY (CY)	9.61	8.20	5.63	4.54	2.85	2.05	12"
LENGTH OF BARS	1130'	949'	767'	635'	495'	360'	
WEIGHT OF BARS (LB)	1179	990	800	662	516	376	

STEEL SCHEDULE FOR REINFORCED CONCRETE HEADWALL DIA. 30"

ITEM	EACH	SIZE	LENGTH	MARK	TYPE	A	B	C	D	E	H	K
1	24	5	9'-6"	W501	STR.							
2	22	5	5'-9"	W502	STR.							
3	21	5	4'-10"	W503	STR.							
4	11	5	3'-11"	W504	STR.							
5	11	5	7'-4"	W505	17		3'-11"	3'-5"	—			
6	4	5		W506	14	1'-3"	1'-3"	1'-3"	1'-3"	1'-3"	0'-10⅝"	0'-10⅝"
7	11	5		W507	S10		2'-0"	0'-7"	2'-0"			

STEEL SCHEDULE FOR REINFORCED CONCRETE HEADWALL DIA. 24"

ITEM	EACH	SIZE	LENGTH	MARK	TYPE	A	B	C	D	E	H	K
1	24	5	7'-6"	W501	STR.							
2	18	5	5'-9"	W502	STR.							
3	17	5	3'-6"	W503	STR.							
4	9	5	3'-11"	W504	STR.							
5	9	5	6'-10"	W505	17		3'-11"	2'-11"	—			
6	4	5		W506	14	1'-0"	1'-0"	1'-0"	1'-0"	1'-0"	0'-8½"	0'-8½"
7	9	5		W507	S10		2'-0"	0'-7"	2'-0"			

STEEL SCHEDULE FOR REINFORCED CONCRETE HEADWALL DIA. 18"

ITEM	EACH	SIZE	LENGTH	MARK	TYPE	A	B	C	D	E	H	K
1	22	5	5'-6"	W501	STR.							
2	14	5	5'-3"	W502	STR.							
3	13	5	3'-6"	W503	STR.							
4	7	5	3'-11"	W504	STR.							
5	7	5	6'-10"	W505	17		3'-11"	2'-11"	—			
6	4	5		W506	14	0'-9"	0'-9"	0'-9"	0'-9"	0'-9"	0'-6⅝"	0'-6⅝"
7	7	5		W507	S10		2'-0"	0'-7"	2'-0"			

NOT TO SCALE

REVISIONS AND CORRECTIONS

MAR. 12, 2007 - ORIGINAL APPROVAL DATE

APPROVED

Kevin S. Marshe
HIGHWAY, TRAFFIC & SAFETY ENGINEER

Robert Ethier
DIRECTOR OF PROGRAM DEVELOPMENT

Mark D. Kirkbride
FEDERAL HIGHWAY ADMINISTRATION

REINFORCED CONCRETE STRAIGHT HEADWALL

VERMONT AGENCY OF TRANSPORTATION

STANDARD

D-33

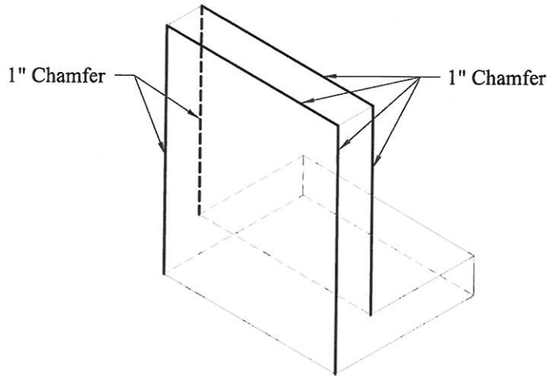

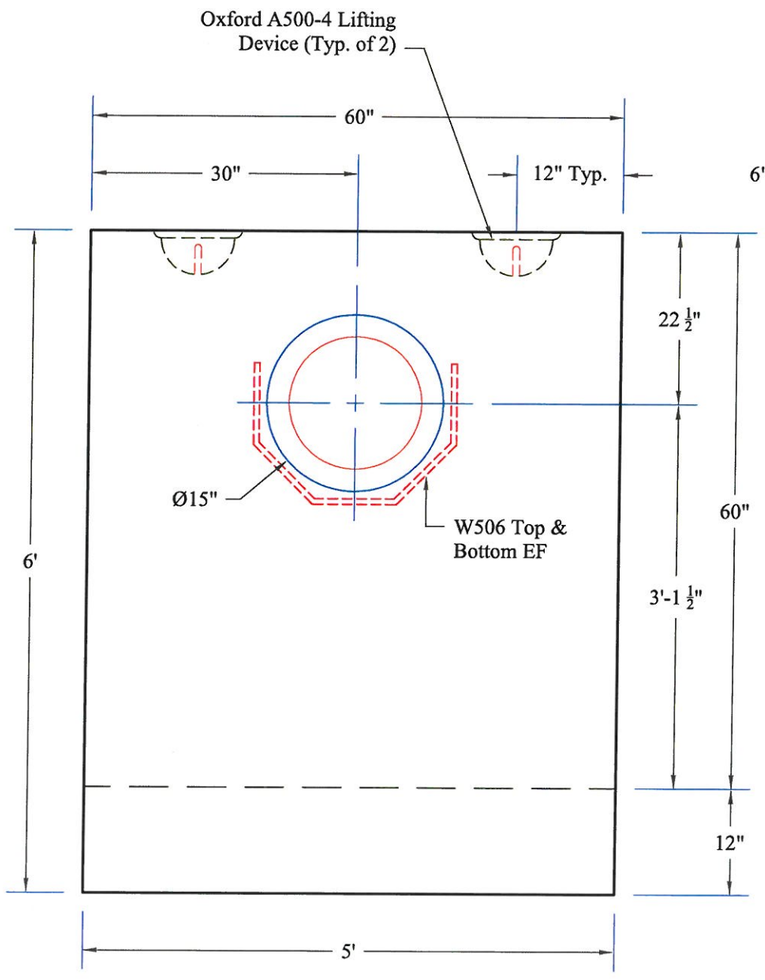

Elevation View

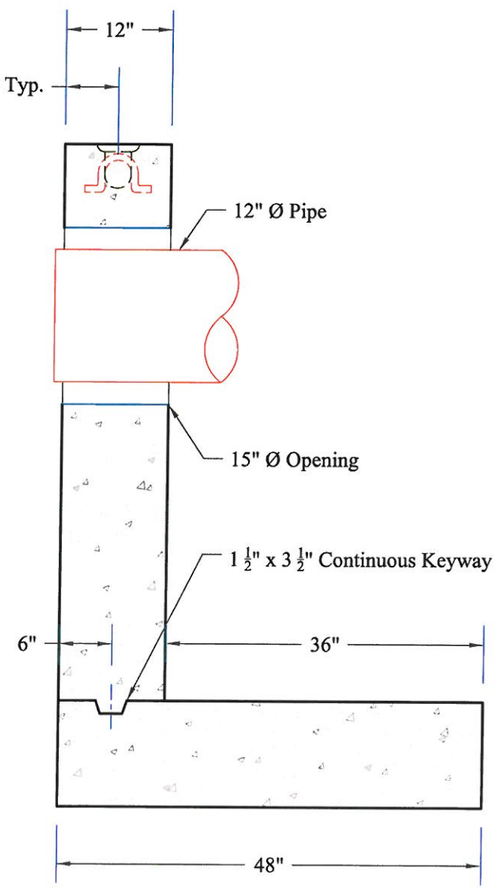

Section View

Steel Schedule for Reinforced Concrete Headwall

Mark	# Piece	Size	Length	Type	A	B	C	D	E	H	K
W501	10	#5	4'-6"	Str.							
W502	10	#5	5'-1"	Str.							
W503	9	#5	3'-6"	Str.							
W504	5	#5	3'-11"	Str.							
W505	5	#5	42'-4"	17		3'-11"	2'-11"	------			
W506	4	#5	8'-0"	14	9"	9"	9"	9"	9"	6 3/8"	6 3/8"
W507	5	#5	5'-1/2"	17		2'-0"	7"	2'-0"			

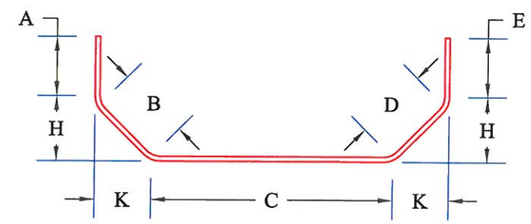

Type 14

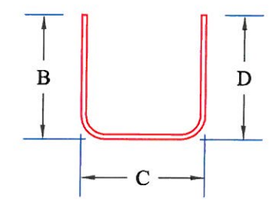

Type 17

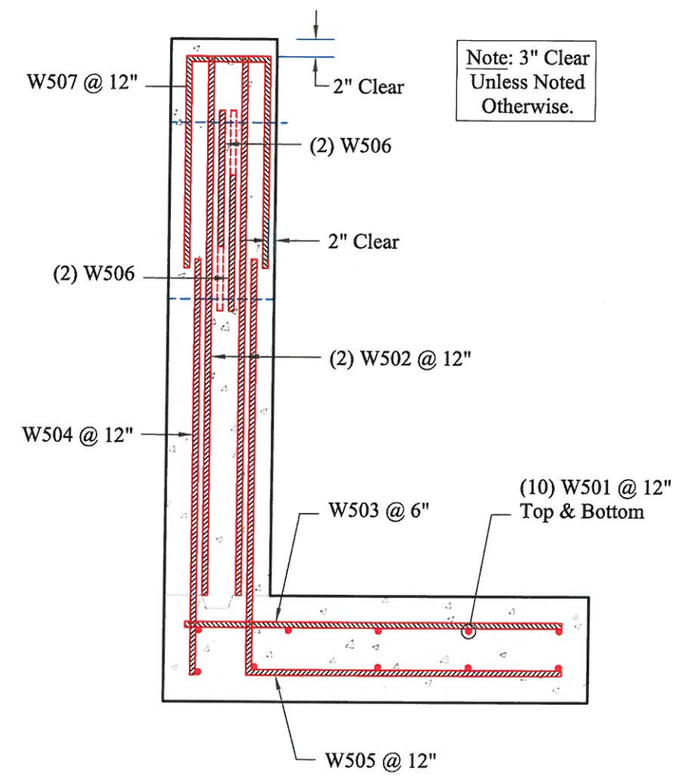

Note: 3" Clear Unless Noted Otherwise.

Rebar Reinforcing

SD Ireland Precast Division
193 Industrial Ave, Williston, VT 05495
P.O. Box 2286, South Burlington, VT 05407
Phone: (802) 658-0201 www.SDIreland.com

Note:
This shop drawing represents S.D. Ireland's interpretation of the architects plans and specifications as well as our contract requirements for this project.

Prior to manufacture and production from this drawing all; dimensions, methods of construction, and existing conditions must be checked, revised and approved by S.D. Ireland's client.

General Notes:
1) All Mortar and control joints are assumed to be 3/8"
2) All lengths stated are actual lengths.
3) All lengths stated to be verified in the field by others:
-Not the responsibility of S.D. Ireland
4) All loose anchorage to be supplied by others:
-Not the responsibility of S.D. Ireland

Legend:

- Headwalls per State Detail D-33
- This headwall satisfies VT AOT pipes up to 18"Ø
- Grade 60 blk rebar
- Concrete P50TER SCC for general precast

IA

Rev.	Date	By	Description

Project Name:	Rutland BRF 3000(16)
Project Location:	Rutland,VT
Drawing Title:	Precast Headwall
Job #: 15790	Date:
Scale: N.T.S.	Page:

S.D. Ireland
Concrete Construction Corporation
802-863-6222 • Fax: 802-860-1528
www.sdireland.com

CONCRETE MIX DESIGN

5000 psi

SCC

SDI MIX CODE: P50TER

DATE: April 08, 2015 **PLANT:** Burlington, VT

PROJECT: General DOT Precast - 2015

FINE AGGREGATE: ASTM C 33	Source:	Hinesburg Sand & Gravel
	Specific Gravity:	2.68 (Abs.: 1.25%)
	Fineness Modulus:	2.65 ±
COARSE AGGREGATE: ASTM C 33	Source:	S.D. Ireland, Brownell Quarry
	Specific Gravity:	2.77(Abs.: 0.43%)
	Description	3/4" 100% Crushed Stone (Size #67)
CEMENT:	Ternary Blend Cement; Lefarge North America Lakes and Seaway Re St. Constant, Quebec (22% Slag, 5% Silica Fume, 73% Type II Cement) (Sp.Gvty: 2.976)	
ADMIXTURES:	Water Reducer (HRWR): Glenium 7500; BASF Admixtures Air Entraining Agent: Darex II AEA; Grace Concrete Chemicals	

CONSTITUENTS (LBS. /YD³)

		Abs.Vol.
Coarse Aggregate (SSD)	1660	9.60
Fine Aggregate (SSD)	1198	7.17
Cement	705	3.80
Water	292	4.68
Air Content (Entrained)	6.5%	1.76
Total	3855	27.00ft³

MIX PROPERTIES/ REQUIREMENTS

Water Cement Ratios: 0.41 (0.44 max)
Entrained Air Content: 5.0 % – 9.0%
Dry Unit Weight: 143 ± pcf
Spread: 21" to 27"
Concrete Temperatures: 50 – 85°F
VSI= ≤1

*ADMIXTURE(S) DOSEAGE (OZ. /YD³)

Glenium 7500 (HRWR)	46 – 53
Darex II AEA	2.0

*Admixture dosage rates are subject to change.

RECENT STRENGTH GAIN

See Separate Report

Approved by James Wild, VAOT Composite Materials Engineer 4/10/15

OXFORD Industrial Technologies, LLC

PO Box 736 • Stevenson, CT 06491
www.oxfordtechusa.com
Phone: (203) 268-6030
Fax: (203) 445-1240
info@oxfordtechusa.com

Oxford Lift System®

B-500
Block Out

Makes a 7" L x 2" W x 3"H Void

Patented

B-750
Block Out

Makes a 8" L x 3" W x 4"H Void

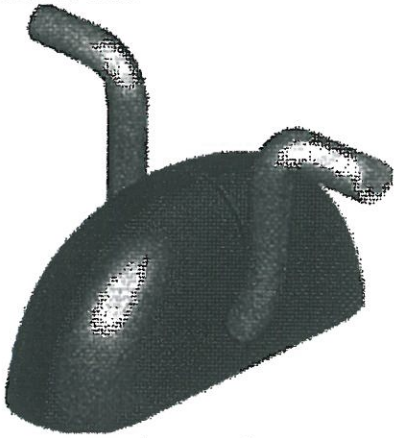

Patented

<back next>

Home	B-500 & B-750	S-150	S-300	Lift Anchor & Order Form	Concrete Products
Pull Iron Capacity	Anchors & Accessories	Toggle-Lok	Insert/Lift Anchor	Grid-Lok/ Rebar Chair	Helpful Calculations

OXFORD Industrial Technologies, LLC

PO Box 736 • Stevenson, CT 06491
www.oxfordtechusa.com
Phone: (203) 268-6030
Fax: (203) 445-1240
info@oxfordtechusa.com

Oxford Lift System®

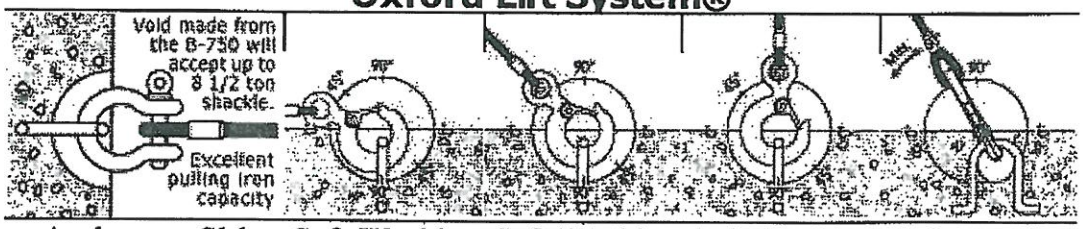

Anchor Product Code	Slab Min. Inches	Safe Working Load @ 90 degree Shear-0 degree Pull	Safe Working Load @ 90 degree Shear-45 degree Pull	Safe Working Load @ 90 degree Tension-90 degree Pull	Safe Working Load @ 90 degree Shear-60 degree Pull
A 500-3	4.00"	4,500	4,000	3,500	4,000
A 500-4	5.00"	8,000	5,500	4,000	5,000
A 500-5	6.00"	10,500	6,500	5,000	5,500
A 750-5	6.00"	12,500	8,000	7,000	7,000
A 750-7	8.00"	15,000	12,500	10,000	10,000

Note: Safe Working Load provides a factor of safety of approximately 4:1

Test Results are based on a minimum concrete compressive strength of 4,000 psi.

< back next >

Home	B-500 & B-750	S-150	S-300	Lift Anchor & Order Form	Concrete Products
Pull Iron Capacity	Anchors & Accessories	Toggle-Lok	Insert/Lift Anchor	Grid-Lok/ Rebar Chair	Helpful Calculations