KUBRICKY CONSTRUCTION CORP.
269 BALLARD ROAD

WILTON, NY 12831
518 792-5864

KUBRICKY CONSTRUCTION CORP.
A PROUD MEMBER OF THE D.A. COLLINS™ COMPANIES
An Equal Opportunity Employer

Rutland City BRF 3000 (2014036)
SUBMITTAL 64.1

Issued 07/21/15
Respond by 07/24/15

To

Timothy Pockette, PE

Topic	506.55 Structural Steel, Plate Girder Erection Plan - Revised
Status	For Approval
Spec section	506.55
Responsibility	(16) River Street
Received from submitter	7/21/15
Sent to approver	7/21/15
Required from approver	7/24/15

From

Volker H.D. Burkowski

Signed by _____ Date 7/21/15

Proceed as Indicated _____ Date _____
Owner Authorized Representative

GENERAL NOTES

SECTION 1: CRANES

1. CRANE SET-UP POSITION IS APPROXIMATE AND MAY BE ADJUSTED TO SUIT ON-SITE CONDITIONS AT THE TIME OF ERECTION. THE NEW POSITION SHALL BE WITHIN THE CRANE ENVELOPE AS SHOWN ON THE ERECTION DRAWING OR AS NOTED IN THE ERECTION PROCEDURE.

2. THE CRANE WILL BE LOCATED TO CLEAR ALL OVERHEAD AND UNDERGROUND OBSTRUCTIONS.

3. NO CRANE SHALL BE OPERATED IN A MANNER THAT WILL EXCEED ITS RATED CAPACITY AT ANY RADIUS AS SPECIFIED BY THE CRANE MANUFACTURER.

4. CRANE CAPACITY CHARTS SHALL BE POSTED IN THE CRANE CAB AND IN CLEAR VIEW OF THE OPERATOR AT ALL TIMES.

5. THE CRANES TO BE USED ARE:

CRANE A - LINKBELT HYDRAULIC CRANE
MODEL ATC 3275
156,500 LBS COUNTERWEIGHT
FULL OUTRIGGERS (26'6")

1

CRANE B - GROVE HYDRAULIC CRANE
MODEL GMK 5220
169,700 LBS COUNTERWEIGHT
FULL OUTRIGGERS (26.6')

6. BASED ON AVAILABILITY, DIFFERENT CRANES MAY BE SUBSTITUTED AT THE TIME OF ERECTION. THE SUBSTITUTED CRANE CAPACITY WILL MEET OR EXCEED LOAD CAPACITIES AT THE SPECIFIED RADIUS.

7. ERECTION WIND SPEED IS NOT TO EXCEED 20 MPH.

SECTION 2: ERECTION

1. THE CONTRACTOR SHALL BE RESPONSIBLE FOR VERIFYING THE WEIGHT OF EACH LIFT AND INSURING THE STABILITY OF EACH MEMBER PRIOR TO CRANE RELEASE AND DURING ALL PHASES OF ERECTION.

2. PICK POINT TO BE THE CENTER OF THE LOAD UNLESS OTHERWISE NOTED.

3. LIFT WEIGHTS SHALL INCLUDE THE WEIGHT OF THE LIFTING APPARATUS PLUS THE WEIGHT OF THE GIRDER.

SECTION 3: BOLTED CONNECTIONS

1. CONNECTIONS: 1

A. SPLICE ELEMENT - SPLICE AND FIELD CONNECTIONS OF MAIN STRESS CARRYING MEMBERS SHALL BE MADE WITH ALL OF THE HOLES FILLED WITH APPROVED HIGH STRENGTH BOLTS AND FULL SIZE ERECTION PINS, WITH BOLTS FULLY TENSIONED BEFORE THE EXTERNAL SUPPORT SYSTEMS ARE RELEASED. AT LEAST ONE-HALF OF THIS PERCENTAGE SHALL BE BOLTS. THE ERECTION PINS SHALL BE USED IN THE CORNERS OF ALL MAIN CONNECTIONS.

B. CROSS FRAMES - CROSSFRAMES AND CROSSFRAMES SHALL BE INSTALLED AS THE WORK PROGRESSES. THE NUMBER AND LOCATION OF CROSSFRAMES AND CROSSFRAMES NEEDED TO INSURE LATERAL STABILITY OF THE MEMBERS DURING ALL PHASES OF THE ERECTION PROCESS ARE SHOWN ON THESE ERECTION DRAWINGS.

BETWEEN THE FIRST TWO LINES OF GIRDERS, EACH DIAPHRAGM OR CROSSFRAME TO GIRDER CONNECTION SHALL BE MADE WITH 100 PERCENT OF THE HOLES FILLED WITH APPROVED HIGH STRENGTH BOLTS. THE BOLTS SHALL BE TIGHTENED UNTIL THERE IS NO GAP BETWEEN THE CONNECTED PARTS. AFTER THE FIRST TWO LINES ARE ERECTED AND STABILIZED, CROSSFRAMES OR CROSSFRAMES INSTALLED BETWEEN SUBSEQUENT LINES OF GIRDERS MAY HAVE EACH OF THEIR CONNECTIONS MADE WITH A MINIMUM OF TWO APPROVED HIGH STRENGTH BOLTS INSTALLED IN EACH CONNECTION UNLESS A GREATER NUMBER OF BOLTS IS REQUIRED FOR STABILITY. THE BOLTS SHALL BE TIGHTENED UNTIL THERE IS NO GAP BETWEEN THE CONNECTED PARTS.

2. FIRST STAGE TIGHTENING OF CROSSFRAME BOLTS SHALL BE SUCH THAT NO GAP EXISTS BETWEEN CONNECTED PARTS, AFTER WRENCH TIGHTENING.

3. MEMBERS SHALL BE SUBJECT TO ONLY LIGHT DRIFTING TO ALIGN HOLES. ANY PINNING SHALL NOT CAUSE ELONGATION OF THE HOLES NOR DISTORTION TO THE MEMBERS.

4. FIELD REAMING OF THE HOLES SHALL NOT BE PERFORMED UNLESS APPROVED BY THE CONTRACT DOCUMENTS OR THE ENGINEER OF RECORD.

NO.	DATE		BY	CHK'D	APPR.
1	7/15/15	CRANE SUBSTITUED, 3.1.A REVISED	KJG		
2					
3					
4					
5					

PREPARED BY:

D.A. COLLINS CONSTRUCTION CO., INC

RYAN BIGGS CLARK DAVIS
ENGINEERING & SURVEYING
257 Ushers Road p.518 406.5506
Clifton Park, NY 12065 f. 518 406.5514
www.ryanbiggs.com

STATE OF VERMONT
DAVID MacGREGOR
NO. 018.0009298
STRUCTURAL
LICENSED
PROFESSIONAL ENGINEER

PROFESSIONAL ENGINEER

APPROVAL

TH 8 (RIVER STREET) OVER OTTER CREEK
BRIDGE NO: 2 (TH 8)
RUTLAND COUNTY

LOCATION: RUTLAND CITY, VT | PROJECT NUMBER: BRF 3000 (16)

STATE OF VERMONT AGENCY OF TRANSPORTATION

CONTRACTOR: KUBRICKY CONSTRUCTION CORP.
FABRICATOR: CASCO BAY STEEL STRUCTURES, INC. JOB NUMBER 597-1
ERECTOR: D.A. COLLINS CONSTRUCTION CO., INC. 269 BALLARD ROAD WILTON, NY 12831

TITLE: ERECTION NOTES

DRAWN BY KJG | CHECKED BY | DATE 6/16/15
SCALE AS SHOWN | DRG. NO. EP-1 | SHEET 1 OF 5

ERECTION PROCEDURE

1. SET UP CRANE A AT C.P. #1.

2. SET UP CRANE B AT C.P. #2.

3. USE CRANE A TO PICK GIRDER 15G5C FROM D.P. #1 USING RIGGING DETAIL R-1

4. USE CRANE B TO PICK GIRDER 10G5B FROM D.P. #2 USING RIGGING DETAIL R-2.

5. SET GIRDERS 15G5C AND 10G5B. PRIOR TO RELEASING THE CRANES, COMPLETE THE FOLLOWING:

   A. MAKE UP THE SPLICE BETWEEN GIRDERS 15G5C AND 10G5B WITH ERECTION PINS AND BOLTS AS PER SECTION 3.1.A.

   B. TIE DOWN GIRDER 15G5C AT THE END ABUTMENT USING DETAIL TD-1.

   C. TIE DOWN GIRDER 10G5B AT THE PIER USING DETAIL TD-1.

   D. TIE DOWN GIRDER 15G5C IN SPAN 2 AT THE SHORING TOWER LOCATION SHOWN ON THE DRAWINGS USING DETAIL TD-2.

7. PRE-HANG THREE (3) CROSSFRAMES OFF OF EACH SIDE OF GIRDER 14G4C AT THE LOCATIONS INDICATED ON THE PLANS.

8. PRE-HANG THREE (3) CROSSFRAMES OFF OF EACH SIDE OF GIRDER 9G4B AT THE LOCATIONS INDICATED ON THE PLANS.

9. USE CRANE A TO PICK GIRDER 14G4C FROM D.P. #1 USING RIGGING DETAIL R-1.

10. USE CRANE B TO PICK GIRDER 9G4B FROM D.P. #2 USING RIGGING DETAIL R-2.

11. SET GIRDERS 14G4C AND 9G4B. PRIOR TO RELEASING THE CRANES, COMPLETE THE FOLLOWING:

   A. MAKE UP THE SPLICE BETWEEN GIRDERS 14G4C AND 9G4B WITH ERECTION PINS AND BOLTS AS PER SECTION 3.1.A.

   B. BOLT UP THE CROSSFRAMES BETWEEN GIRDERS 15G5C AND 14G4C AS WELL AS 10G5B AND 9G4B AS PER SECTION 3.1.B.

12. THE SHORING TOWER MAY BE REMOVED NOW OR AT A LATER TIME.

13. THE REMAINING CROSSFRAMES BETWEEN GIRDERS 15G5C AND 14G4C AS WELL AS 10G5B AND 9G4B MAY BE INSTALLED NOW OR AT A LATER TIME.

14. USE CRANE A TO PICK GIRDER 13G3C FROM D.P. #1 USING RIGGING DETAIL R-1.

15. USE CRANE B TO PICK GIRDER 8G3B FROM D.P. #2 USING RIGGING DETAIL R-2.

16. SET GIRDERS 13G3C AND 8G3B. PRIOR TO RELEASING THE CRANES, COMPLETE THE FOLLOWING:

   A. MAKE UP THE SPLICE BETWEEN GIRDERS 13G3C AND 8G3B WITH ERECTION PINS AND BOLTS AS PER SECTION 3.1.A.

   B. BOLT UP THE CROSSFRAMES BETWEEN GIRDERS 14G4C AND 13G3C AS WELL AS 9G4B AND 8G3B AS PER SECTION 3.1.B.

17. THE REMAINING CROSSFRAMES BETWEEN GIRDERS 14G4C AND 13G3C AS WELL AS 9G4B AND 8G3B MAY BE INSTALLED NOW OR AT A LATER TIME.

18. PRE-HANG THREE (3) CROSSFRAMES OFF OF EACH SIDE OF GIRDER 12G2C AT THE LOCATIONS INDICATED ON THE PLANS.

19. PRE-HANG THREE (3) CROSSFRAMES OFF OF EACH SIDE OF GIRDER 7G2B AT THE LOCATIONS INDICATED ON THE PLANS.

20. USE CRANE A TO PICK GIRDER 12G2C FROM D.P. #1 USING RIGGING DETAIL R-1.

21. USE CRANE B TO PICK GIRDER 7G2B FROM D.P. #2 USING RIGGING DETAIL R-2.

22. SET GIRDERS 12G2C AND 7G2B. PRIOR TO RELEASING THE CRANES, COMPLETE THE FOLLOWING:

   A. MAKE UP THE SPLICE BETWEEN GIRDERS 12G2C AND 7G2B WITH ERECTION PINS AND BOLTS AS PER SECTION 3.1.A.

   B. BOLT UP THE CROSSFRAMES BETWEEN GIRDERS 13G3C AND 12G2C AS WELL AS 8G3B AND 7G2B AS PER SECTION 3.1.B.

23. THE REMAINING CROSSFRAMES BETWEEN GIRDERS 13G3C AND 12G2C AS WELL AS 8G3B AND 7G2B MAY BE INSTALLED NOW OR AT A LATER TIME.

24. USE CRANE A TO PICK GIRDER 11G1C FROM D.P. #1 USING RIGGING DETAIL R-1.

25. USE CRANE B TO PICK GIRDER 6G1B FROM D.P. #2 USING RIGGING DETAIL R-2.

26. SET GIRDERS 11G1C AND 6G1B. PRIOR TO RELEASING THE CRANES, COMPLETE THE FOLLOWING:

   A. MAKE UP THE SPLICE BETWEEN GIRDERS 11G1C AND 6G1B WITH ERECTION PINS AND BOLTS AS PER SECTION 3.1.A.

   B. BOLT UP THE CROSSFRAMES BETWEEN GIRDERS 12G2C AND 11G1C AS WELL AS 7G2B AND 6G1B AS PER SECTION 3.1.B.

27. THE REMAINING CROSSFRAMES BETWEEN GIRDERS 12G2C AND 11G1C AS WELL AS 7G2B AND 6G1B MAY BE INSTALLED NOW OR AT A LATER TIME.

28. MOVE AND SET CRANE A UP AT C.P. #3.

29. MOVE AND SET CRANE B UP AT C.P. #4.

30. USE CRANE B TO PICK GIRDER 5G5A FROM D.P. #3 USING RIGGING DETAIL R-3.

31. SET GIRDER 5G5A USING CRANE B:

   A. MAKE UP THE SPLICE BETWEEN G105B AND 5G5A WITH ERECTION PINS AND BOLTS AS PER SECTION 3.1.A.

   B. TIE DOWN GIRDER 5G5A AT THE BEGIN ABUTMENT USING DETAIL TD-1.

32. PRE-HANG THREE (3) CROSSFRAMES OFF OF EACH SIDE OF GIRDER 4G4A AT THE LOCATIONS INDICATED ON THE PLANS.

NO.	DATE		BY	CHK'D	APPR.
1	7/15/15	ERECTION PROCEDURE REVISED	KJG		
2					
3					
4					
5					

PREPARED BY:

D.A. COLLINS CONSTRUCTION CO., INC

RYAN BIGGS CLARK DAVIS
ENGINEERING & SURVEYING
257 Ushers Road p. 518 406.5506
Clifton Park, NY 12065 f. 518 406.5514
www.ryanbiggs.com

STATE OF VERMONT
DAVID MacGREGOR
NO. 018.0009298
STRUCTURAL
LICENSED PROFESSIONAL ENGINEER

PROFESSIONAL ENGINEER

APPROVAL

TH 8 (RIVER STREET) OVER OTTER CREEK
BRIDGE NO: 2 (TH 8)
RUTLAND COUNTY

LOCATION:	RUTLAND CITY, VT	PROJECT NUMBER:	BRF 3000 (16)
STATE OF VERMONT AGENCY OF TRANSPORTATION			
CONTRACTOR:	KUBRICKY CONSTRUCTION CORP.		
FABRICATOR:	CASCO BAY STEEL STRUCTURES, INC. JOB NUMBER 597-1		
ERECTOR:	D.A. COLLINS CONSTRUCTION CO., INC. 269 BALLARD ROAD WILTON, NY 12831		
TITLE	ERECTION PROCEDURE		
DRAWN BY KJG	CHECKED BY	DATE 6/16/15	
SCALE AS SHOWN	DRG. NO. EP-2	SHEET 2 OF 5	

ERECTION PROCEDURE (CONTINUED)

33. USE CRANE A TO PICK GIRDER 4G4A FROM D.P. #3 USING RIGGING DETAIL R-1.

34. SET GIRDER 4G4A. PRIOR TO RELEASING CRANE A AND CRANE B, COMPLETE THE FOLLOWING:

A. MAKE UP THE SPLICE BETWEEN 9G4B AND 4G4A WITH ERECTION PINS AND BOLTS AS PER SECTION 3.1.A.

B. BOLT UP THE CROSSFRAMES BETWEEN GIRDERS 5G5A AND 4G4A AS PER SECTION 3.1.B.

35. DISCONNECT CRANE A AND CRANE B.

36. THE REMAINING CROSSFRAMES BETWEEN GIRDERS 5G5A AND 4G4A MAY BE INSTALLED NOW OR AT A LATER TIME.

37. USE CRANE A TO PICK GIRDER 3G3A FROM D.P. #3 USING RIGGING DETAIL R-1.

38. SET GIRDER 3G3A. PRIOR TO RELEASING THE CRANE, COMPLETE THE FOLLOWING:

A. MAKE UP THE SPLICE BETWEEN GIRDERS 8G3B AND 3G3A WITH ERECTION PINS AND BOLTS AS PER SECTION 3.1.A.

B. BOLT UP THE CROSSFRAMES BETWEEN GIRDERS 4G4A AND 3G3A AS PER SECTION 3.1.B.

39. THE REMAINING CROSSFRAMES BETWEEN GIRDERS 4G4A AND 3G3A MAY BE INSTALLED NOW OR AT A LATER TIME.

40. PRE-HANG THREE (3) CROSSFRAMES OFF OF EACH SIDE OF GIRDER 2G2A AT THE LOCATIONS INDICATED ON THE PLANS.

41. USE CRANE A TO PICK GIRDER 2G2A FROM D.P. #3 USING RIGGING DETAIL R-1.

42. SET GIRDER 2G2A. PRIOR TO RELEASING THE CRANE, COMPLETE THE FOLLOWING:

A. MAKE UP THE SPLICE BETWEEN GIRDERS 7G2B AND 2G2A WITH ERECTION PINS AND BOLTS AS PER SECTION 3.1.A.

B. BOLT UP THE CROSSFRAMES BETWEEN GIRDERS 3G3A AND 2G2A AS PER SECTION 3.1.B.

43. THE REMAINING CROSSFRAMES BETWEEN GIRDERS 3G3A AND 2G2A MAY BE INSTALLED NOW OR AT A LATER TIME.

44. USE CRANE A TO PICK GIRDER 1G1A FROM D.P. #3 USING RIGGING DETAIL R-1.

45. SET GIRDER 1G1A. PRIOR TO RELEASING THE CRANE, COMPLETE THE FOLLOWING:

A. MAKE UP THE SPLICE BETWEEN GIRDERS 6G1B AND 1G5A WITH ERECTION PINS AND BOLTS AS PER SECTION 3.1.A.

B. BOLT UP THE CROSSFRAMES BETWEEN GIRDERS 2G2A AND 1G1A AS PER SECTION 3.1.B.

46. INSTALL ALL REMAINING CROSSFRAMES (IF ANY) THAT WERE NOT INSTALLED IN PREVIOUS STEPS.

47. TORQUE AND CHECK ALL BOLTS PER VAOT STANDARD SPECIFICATIONS FOR CONSTRUCTION.

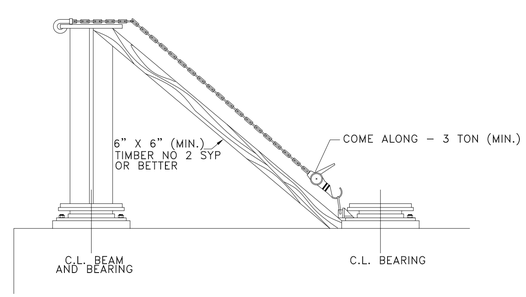

DETAIL 'TD–1'
GIRDER – TIEDOWN DETAIL
NOT TO SCALE

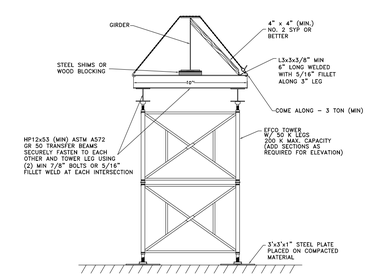

DETAIL 'TD–2'
GIRDER – TIEDOWN DETAIL
NOT TO SCALE

NO.	DATE		BY	CHK'D	APPR.
1	7/15/15	C GIRDER ERECTION MODIFIED, TIEDOWN DETAILS ADDED	KJG		
2					
3					
4					
5					

PREPARED BY:

D.A. COLLINS CONSTRUCTION CO., INC

RYAN BIGGS CLARK DAVIS
ENGINEERING & SURVEYING
257 Ushers Road p. 518 406.5506
Clifton Park, NY 12065 f. 518 406.5514
www.ryanbiggs.com

STATE OF VERMONT DAVID MacGREGOR NO. 018.0009298 STRUCTURAL LICENSED PROFESSIONAL ENGINEER

PROFESSIONAL ENGINEER

APPROVAL

TH 8 (RIVER STREET) OVER OTTER CREEK
BRIDGE NO: 2 (TH 8)
RUTLAND COUNTY

LOCATION:	RUTLAND CITY, VT	PROJECT NUMBER:	BRF 3000 (16)
STATE OF VERMONT AGENCY OF TRANSPORTATION			
CONTRACTOR:	KUBRICKY CONSTRUCTION CORP.		
FABRICATOR:	CASCO BAY STEEL STRUCTURES, INC. JOB NUMBER 597–1		
ERECTOR:	D.A. COLLINS CONSTRUCTION CO., INC. 269 BALLARD ROAD WILTON, NY 12831		
TITLE	ERECTION PROCEDURE		
DRAWN BY KJG	CHECKED BY	DATE 6/16/15	
SCALE AS SHOWN	DRG. NO. EP–3	SHEET 3 OF 5	

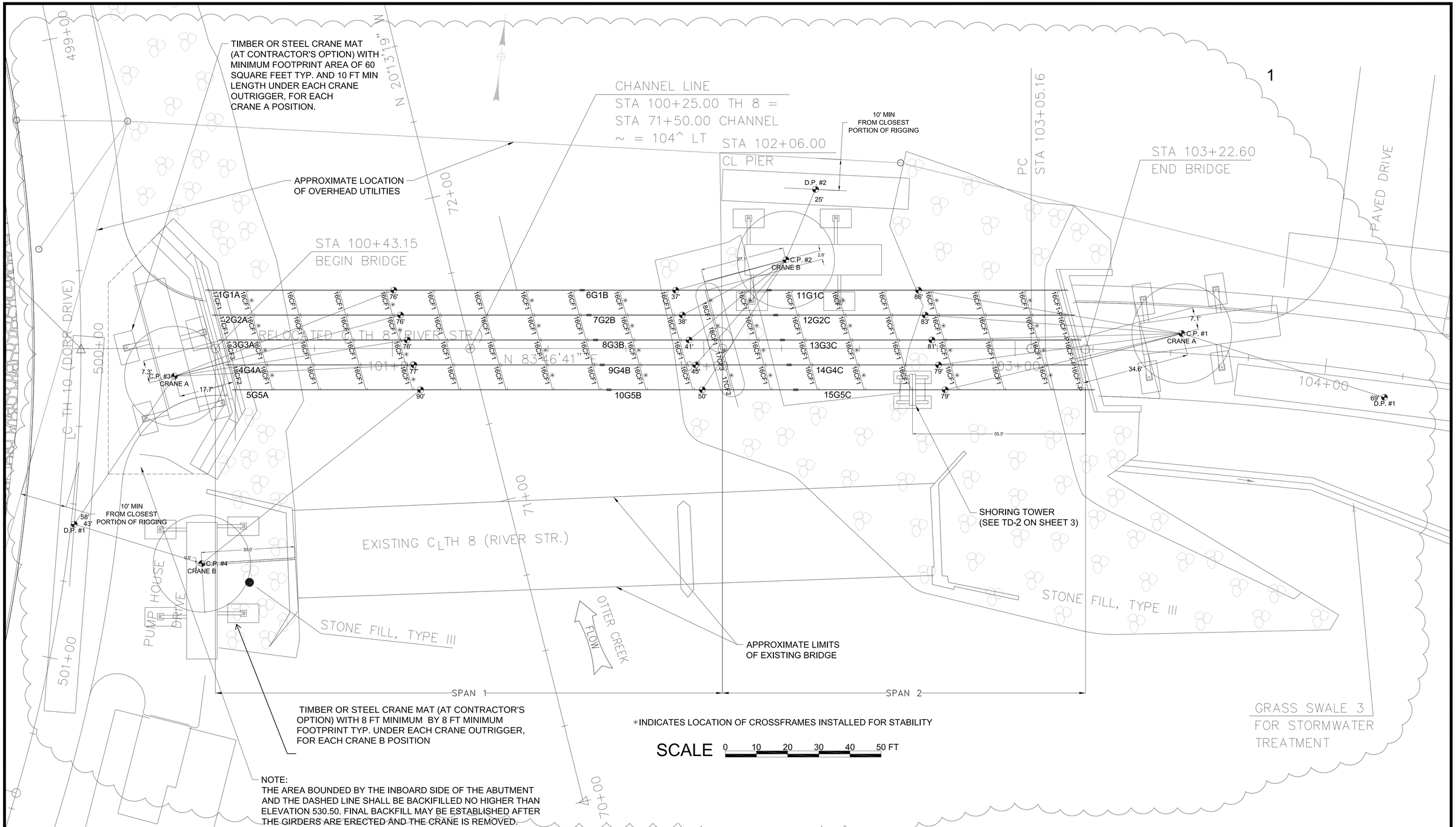

NO.	DATE		BY	CHK'D	APPR.
1	7/15/15	REVISED PER PRELIMINARY COMMENTS, CRANE SUBSTITUTION AND PROCEDURE MODIFICATION	KJG		
2					
3					
4					
5					

PREPARED BY:

D.A. COLLINS CONSTRUCTION CO., INC

RYAN BIGGS CLARK DAVIS
ENGINEERING & SURVEYING
257 Ushers Road p.518 406.5506
Clifton Park, NY 12065 f. 518 406.5514
www.ryanbiggs.com

STATE OF VERMONT
DAVID MacGREGOR
NO. 018-0009298
STRUCTURAL
LICENSED PROFESSIONAL ENGINEER

PROFESSIONAL ENGINEER

APPROVAL

TH 8 (RIVER STREET) OVER OTTER CREEK
BRIDGE NO: 2 (TH 8)
RUTLAND COUNTY

LOCATION:	RUTLAND CITY, VT	PROJECT NUMBER:	BRF 3000 (16)
STATE OF VERMONT AGENCY OF TRANSPORTATION			
CONTRACTOR:	KUBRICKY CONSTRUCTION CORP.		
FABRICATOR:	CASCO BAY STEEL STRUCTURES, INC. JOB NUMBER 597-1		
ERECTOR:	D.A. COLLINS CONSTRUCTION CO., INC. 269 BALLARD ROAD WILTON, NY 12831		
TITLE	ERECTION PLAN		
DRAWN BY KJG	CHECKED BY	DATE 6/16/15	
SCALE AS SHOWN	DRG. NO. EP-4	SHEET 4 OF 5	

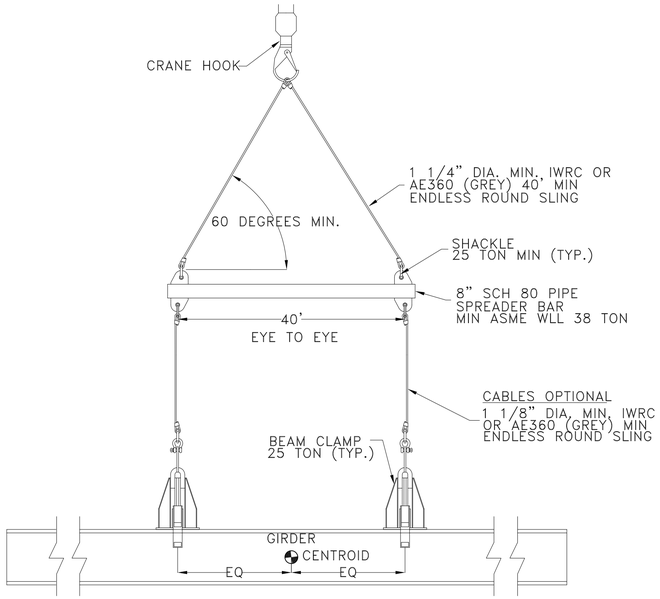

DETAIL 'R-1'
NOT TO SCALE

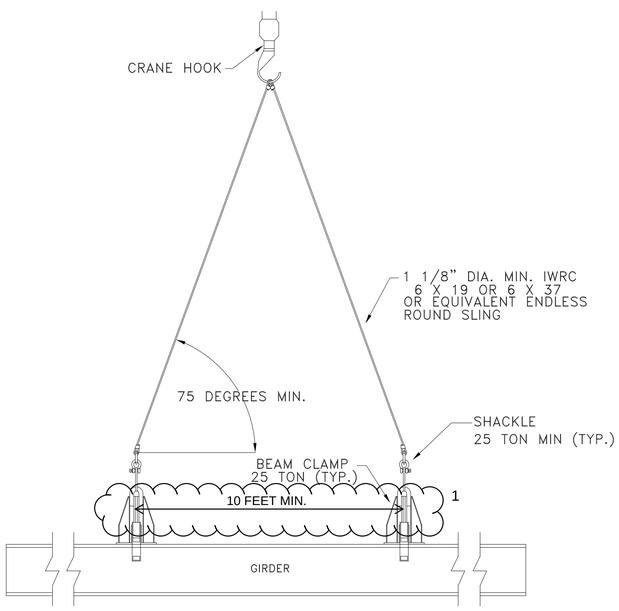

DETAIL 'R-2'
NOT TO SCALE

GIRDER	LENGTH (FT)	GIRDER WEIGHT (LBS)	CROSSF RAME WEIGHT (LBS)	RIGGING ALLOWANCE (LBS)	TOTAL PICK WEIGHT (LBS)	CRANE	CRANE POSITION	DELIVERY POINT	CRANE PICK RADIUS (FT)	CAPACITY AT PICK RADIUS (LBS)	SUPPLY VS DEMAND (PICK)	CRANE SET RADIUS (FT)	CAPACITY AT SET RADIUS (LBS)	SUPPLY VS DEMAND (SET)	RIGGING TYPE
1G1A	121.08	36096	0	7000	43096	A	3	3	58	62300	1.45	76	51400	1.19	1
2G2A	121.08	36672	2358	7000	46030	A	3	3	58	62300	1.35	76	51400	1.12	1
3G3A	121.08	36672	0	7000	43672	A	3	3	58	62300	1.43	76	51400	1.18	1
4G4A	121.08	36672	2358	7000	46030	A	3	3	58	62300	1.35	77	51400	1.12	1
5G5A	121.08	36096	0	7000	43096	B	4	3	51	85000	1.97	90	46000	1.07	3
6G1B	60.00	28074	0	7000	35074	B	2	2	25	140000	3.99	37	73000	2.08	2
7G2B	60.00	28287	2358	7000	37645	B	2	2	25	140000	3.72	38	73000	1.94	2
8G3B	60.00	28287	0	7000	35287	B	2	2	25	140000	3.97	41	62000	1.76	2
9G4B	60.00	28287	2358	7000	37645	B	2	2	25	140000	3.72	45	62000	1.65	2
10G5B	60.00	28074	0	7000	35074	B	2	2	25	140000	3.99	50	53000	1.51	2
11G1C	96.07	28451	0	7000	35451	A	1	1	69	56300	1.59	86	45500	1.28	1
12G2C	96.07	28957	2358	7000	38315	A	1	1	69	56300	1.47	83	49200	1.28	1
13G3C	96.07	28957	0	7000	35957	A	1	1	69	56300	1.57	81	49200	1.37	1
14G4C	96.07	28957	2358	7000	38315	A	1	1	69	56300	1.47	79	51400	1.34	1
15G5C	96.07	28451	0	7000	35451	A	1	1	69	56300	1.59	79	51400	1.45	1

NOTES:

1. WEIGHTS IN TABLE ABOVE INCLUDE THE HEAVIEST RIGGING OPTION AS WELL AS THE SPLICE PLATES AND PREHUNG DIAPHRAMS INDICATED IN THE PROCEDURE. ADDITIONAL DIAPHRAGMS MAY BE ADDED AT THE CONTRACTOR'S CONVENIENCE SO LONG AS THE SUPPLY VS DEMAND RATIO IS NOT LESS THAN ONE AS DETERMINED BY THE CONTRACTOR'S COMPETENT PERSON.

2. CAPACITIES IN THE TABLE ABOVE WERE CONSERVATIVELY FOUND BY ROUNDING UP TO THE NEAREST RADIUS LISTED IN EACH CRANE CHART (NOT INTERPOLATED).

3. EACH OF THE CRANE'S INTERNAL SAFETY FEATURES (INCLUDING BUT NOT LIMITED TO THE ELECTRONIC SAFE LOAD AND STABILITY INDICATOR) SHALL BE FULLY FUNCTIONING AS INTENDED BY THE CRANE MANUFACTURER. MANUAL OVERRIDE OF SAID FEATURES DURING GIRDER ERECTION IS NOT PERMITTED.

4. RIGGING SHALL NOT BE ADDED OR MODIFIED SUCH THAT THE RIGGING ALLOWANCE IS EXCEEDED.

5. GIRDERS SHALL BE PICKED FROM THE DELIVERY TRUCK SLOWLY AND SLOPE CHECKED FOR ACCEPTABILITY BY THE CONTRACTOR'S COMPETENT PERSON PRIOR TO PLACED INTO POSITION. IF THE SLOPE IS FOUND TO BE UNACCEPTABLE, THE GIRDER WILL BE SET BACK ONTO THE DELIVERY TRUCK AND PICK POINTS ADJUSTED PRIOR TO PLACING INTO FINAL POSITION.

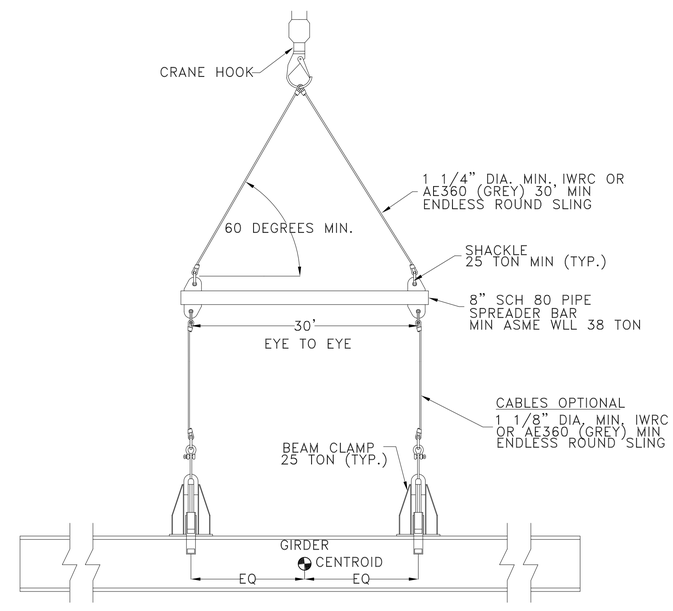

DETAIL 'R-3'
NOT TO SCALE

NO.	DATE		BY	CHK'D	APPR.
1	7/15/15	TABLE REVISED TO REFLECT CRANE SUBSTITUTION, TIEDOWN DETAILS MOVED TO SHEET 3, R-3 ADDED	KJG		
2					
3					
4					
5					

PREPARED BY:

D.A. COLLINS CONSTRUCTION CO., INC

RYAN BIGGS CLARK DAVIS
ENGINEERING & SURVEYING
257 Ushers Road p.518 406.5506
Clifton Park, NY 12065 f. 518 406.5514
www.ryanbiggs.com

STATE OF VERMONT
DAVID MacGREGOR
NO. 018.0009298
STRUCTURAL
LICENSED PROFESSIONAL ENGINEER

PROFESSIONAL ENGINEER

APPROVAL

TH 8 (RIVER STREET) OVER OTTER CREEK
BRIDGE NO: 2 (TH 8)
RUTLAND COUNTY

LOCATION: RUTLAND CITY, VT
PROJECT NUMBER: BRF 3000 (16)

STATE OF VERMONT AGENCY OF TRANSPORTATION

CONTRACTOR: KUBRICKY CONSTRUCTION CORP.
FABRICATOR: CASCO BAY STEEL STRUCTURES, INC. JOB NUMBER 597-1
ERECTOR: D.A. COLLINS CONSTRUCTION CO., INC. 269 BALLARD ROAD WILTON, NY 12831

TITLE: PICKING DETAILS

DRAWN BY KJG | CHECKED BY | DATE 6/16/15
SCALE AS SHOWN | DRG. NO. EP-5 | SHEET 5 OF 5

RYAN BIGGS
CLARK DAVIS
ENGINEERING & SURVEYING

CALCULATIONS for GIRDER ERECTION at

TH-8 (RIVER STREET) OVER OTTER CREEK
RUTLAND, VERMONT
BRF 3000 (16)

TABLE OF CONTENTS:

Rigging ..... R1 – R6
Picking / Setting ..... S1 - S16

Submitted to:
D.A. Collins Construction

269 Ballard Road
Wilton, New York 12118
518-664-9855

Submitted by:
Ryan Biggs | Clark Davis
Engineering & Surveying P.C.
257 Ushers Road
Clifton Park, New York 12065
518-406-5506

RYAN-BIGGS Project 11085

Submitted: July 21, 2015

STATE OF VERMONT
DAVID MacGREGOR
NO. 018-0009298
STRUCTURAL
LICENSED
PROFESSIONAL ENGINEER

CHECK RIGGING USE P_{MAX} = 46 KIPS

(CONSERVATIVE SINCE RIGGING DOESN'T CARRY CRANE BLOCK)

REF ERECTION SUBMITTAL PGS 7 THROUGH 10

BEAM CLAMP WLL = 25T = 50K > 46K/2 = 23K ∴ O.K.

CHECK PL GRIP

18" WIDE ACTUAL ; PERMISSABLE 16" TO 24" ∴ O.K.

1⅛" OR 2½" THICK ACTUAL; 1" TO 3" ALLOWED ∴ O.K.

R-1

25T SHACKLE WLL = 50K > 46K/2 = 23K ∴ O.K.

1⅛ VERT SLING WLL = 12.4T = 24.8K > 23K ∴ O.K.

AE 360 (VERT GREY) WLL = 31K > 23K ∴ O.K.

25T SHACKLE WLL = 50K > 46K/2 ÷ SIN 60° = 26.6K ∴ O.K.

1¼ ∡ SLING WLL = 30K > " " ∴ O.K.

AE 360 (∡ GREY) WLL = 31K > " " ∴ O.K.

R-2 ≈ 38K

T = (½) ÷ SIN 75° ≈ 20KIPS 1⅛" SLING 12.4T = 24.8K > 20K ∴ O.K.

25T BEAM CLAMP & SHACKLE O.K.

RYAN-BIGGS ASSOCIATES, P.C.
291 RIVER STREET
TROY, NY 12180
(518) 272-6266 FAX (518) 272-4467
www.ryanbiggs.com

PROJECT NUMBER: 8352 DATE: FEB 04 PAGE: SK1

PROJECT: LIFTING BEAM BY: MGY ✓DCM

SUBJECT: LIFTING BEAM SKETCH

R2

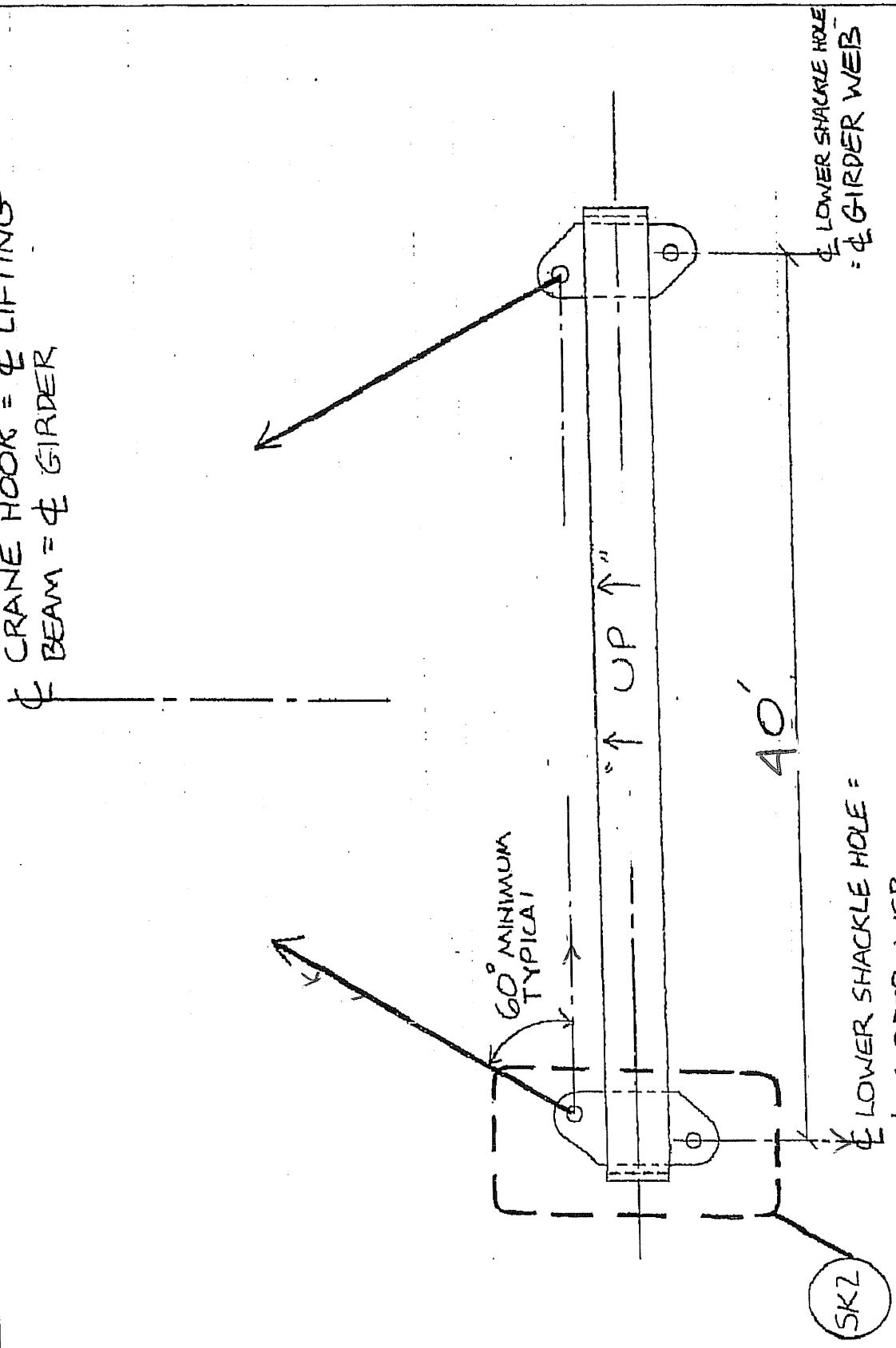

SK1 LIFTING BEAM ELEVATION

NOT TO SCALE

RYAN-BIGGS ASSOCIATES, P.C.
291 RIVER STREET
TROY, NY 12180
(518) 272-6266 FAX (518) 272-4467
www.ryanbiggs.com

PROJECT NUMBER: B352 DATE: FEB 04 PAGE: SK2

PROJECT: LIFTING BEAM BY: MGY ✓R ✓DCM

SUBJECT: LIFTING BEAM SKETCH

R3

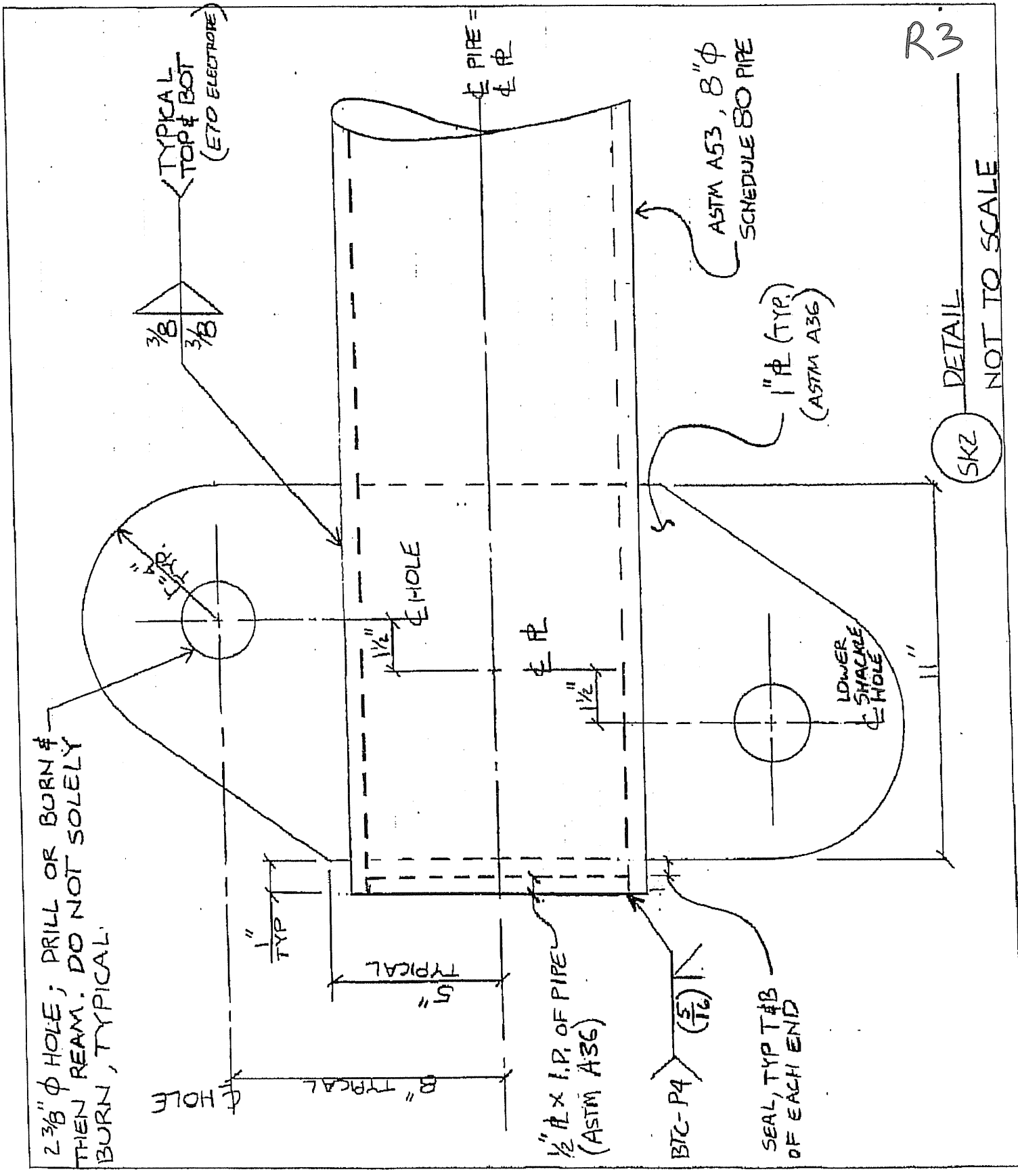

USE DAC 40' LIFTING BEAM 8"ϕ XTRA STRONG

↑46K (EVEN INCLUDING CRANE BLOCK... CONS.)

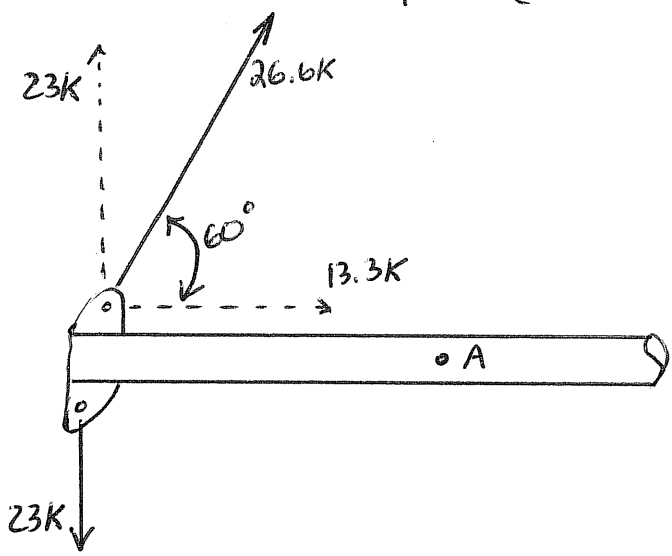

ΣM @A $(23K)(20'-0"-3") + (13.3K)(0'-9") - (23K)(20'-0") = M$

4.23 FT-KIPS

$\Sigma M = 13.03$ FT-K

M_{SELF} $\frac{1}{8}(0.044K/FT)(40')^2 = 8.8$ FT-KIPS

$f_b = M/S_x = (12"/FT)(\downarrow) \div 23.1 IN^3 = 6.8$ KSI

$f_a = H/A = 13.3K \div 11.9 IN^2 = 1.1$ KSI

$C_c = \sqrt{2\pi^2 E/f_y} = 128$

$Kl/r = (1.0)(12"/FT)(40') \div 2.89" = 166$

AISC 14TH 4-236 $F_{CR}/\Omega_c = 5.45\ ksi = F_A$

$F_B = 0.78 f_y = 0.78 \cdot 35 ksi = 27.3\ ksi$

INTERACTION 1

$$\frac{f_a}{F_A} + \frac{C_m \cdot f_b}{(1 - f_a/F'_e)(F_B)} = \frac{1.1\ ksi}{5.45\ ksi} + \frac{(1.0)(6.8\ ksi)}{\left(1 - \frac{1.1\ ksi}{5.45\ ksi}\right)(27.3\ ksi)}$$

$= 0.514 < 0.555$ $\frac{1.0}{1.8}$ ASME BELOW THE HOOK ADDITIONAL F.O.S.

O.K.

INT 2

$$\frac{f_a}{0.6 f_y} + \frac{f_b}{F_B} = \frac{1.1\ ksi}{0.6 \cdot 35 ksi} + \frac{6.8 ksi}{27.3 ksi}$$

$= 0.301 < 0.555 \therefore$ O.K.

NOTE: CALCS SHOWN FOR 40' SPREADER. 30' SPREADER MADE FROM SAME PIPE & w/ IDENTICAL CONNECTIONS OK BY INSP.

LOCAL
LIFTING ℄

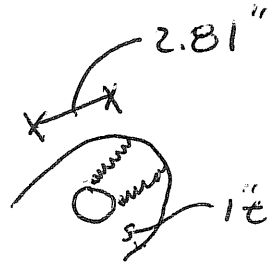

BLOCK SHEAR

$26.6K \div (1")(2)(2.81") = 4.73$ KSI O.K.

RUPTURE

LET $\ell = 0.8\phi = (0.8)(2\tfrac{3}{8}") = 1.9$

$M = \frac{P\ell}{8} = (26.6K)(1.9") \div 8 = 6.32$ IN-K

$f_b = M/S_x = (\downarrow) \div \frac{1}{6}(1")(2.81")^2 = 4.8$ KSI O.K.

GLOBAL
LIFTING ℄

DIRECT TENSION & FLEX FROM e

$$\frac{f_t}{F_T} + \frac{f_b}{F_B} \qquad \frac{\frac{23K}{(1")(11")}}{21.6\text{ KSI}} + \frac{\frac{(13.3K)(9")}{\frac{1}{6}(1")(11")^2}}{21.6\text{ KSI}}$$

$=$

$0.37 < 0.555 \quad \therefore$ O.K.

CRANE A WILL BE POSITIONED BEHIND BEGIN ABUT

CRANE A SELF	≈	133.8	KIPS	← SUBMITTAL PACKET PG 3
COUNTER WT	≈	156.5	KIPS	
MAX PICK		46.0	KIPS	
		3.7	KIPS	(VARIOUS CRANE BELLS & WHISTLES)
		340	KIPS	

LET CRANE O.T. GOVERNED BY 85% TIPPING

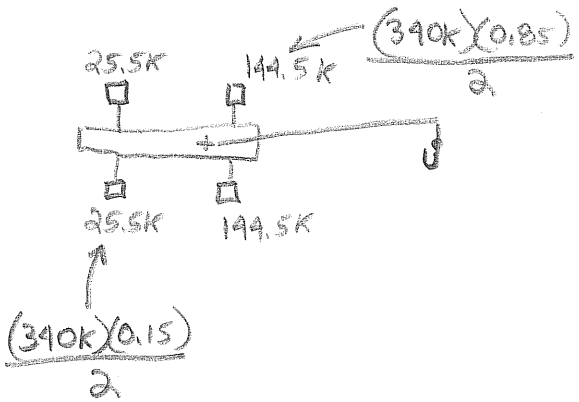

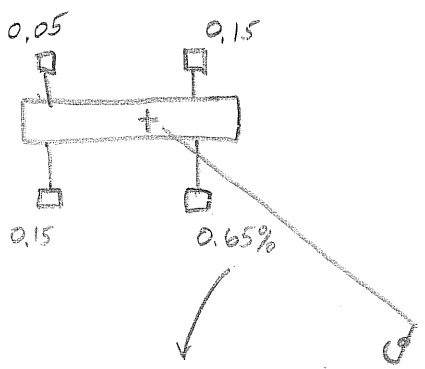

(0.65)(340K)

= 221 KIPS

LET SOIL BRG ALLOWABLE FOR TEMP CONDITION = 4KSF

A_{REQ} = (↓)/↓ = 55 FT^2

SAY 60 FT^2 FOR DWGS

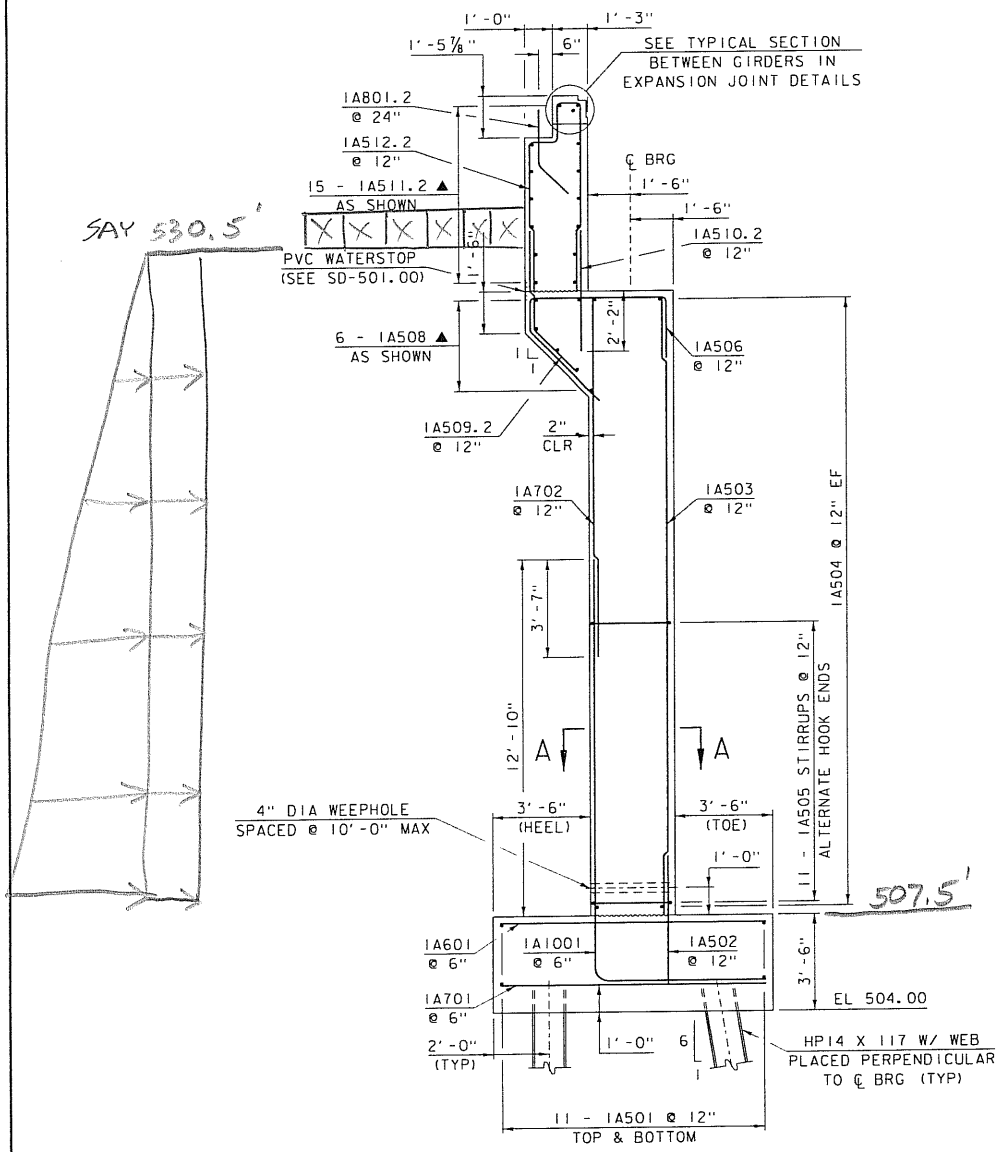

ABUTMENT NO. 1 TYPICAL SECTION

SCALE: 3/8" = 1'-0"

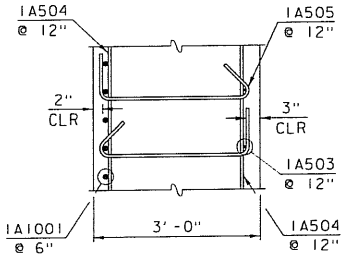

SECTION A-A

SCALE: 3/4" = 1'-0"
(WINGWALLS NO 1 & 2 SIMILAR)

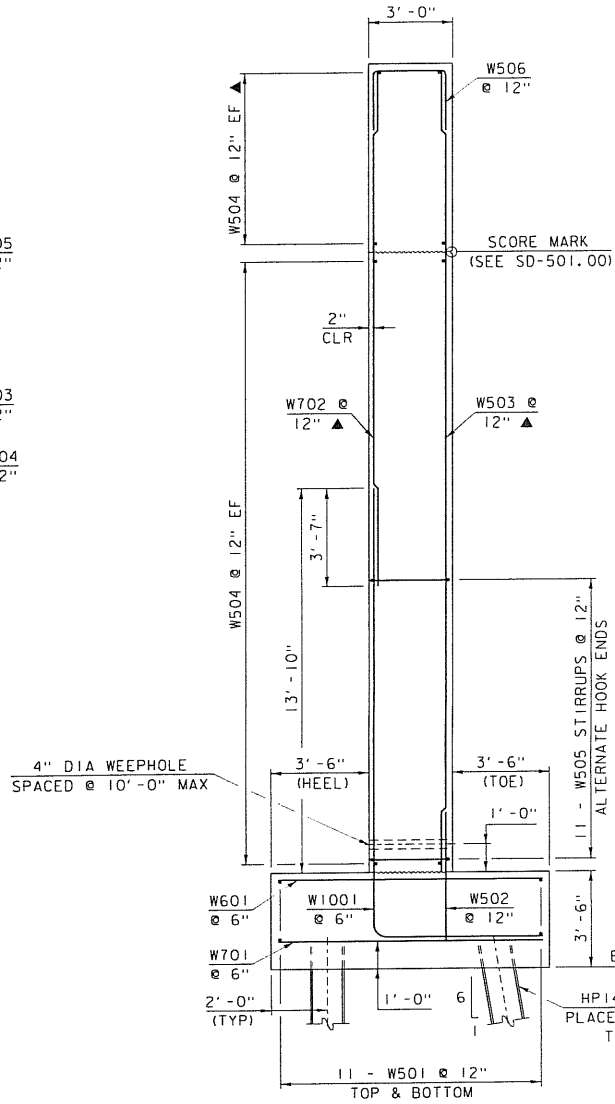

WINGWALLS NO. 1 & 2 TYPICAL

SCALE: 3/8" = 1'-0"

NOTE:

NF = NEAR FACE
FF = FAR FACE
EF = EACH FACE
▲ = CUT TO FIT IN FIELD
3" CLR. UNLESS OTHERWISE NOTED
2'-2" BAR LAP UNLESS OTHERWISE NOTED

DCM

PROJECT NAM
PROJECT NUM
FILE NAME: s9
PROJECT LEA
DESIGNED BY:
ABUTMENT NO

CRANE MAT & OUTRIGGER WILL BE BEHIND NEW WALL

LET NEW FILL = 125 PCF w/ $\phi = 34°$; LET $K_a = 0.28$

WITH BOOM OUT "DIAGONALLY" OVER ONE OUTRIGGER

$q = Q \cdot K_a = (4000\,PSF)(0.28) = 1120\ PSF$

$m = (\downarrow)(23')(23'/2) + \frac{1}{6}(125\,PCF)(0.28)(23')^3$

$= 367{,}214$ FT-lbs

AASHTO LOAD FACTOR

$M_u = (\downarrow)(12''/FT)(1.5) = 6{,}610$ IN-KIPS ✓

LET $d = 36'' - 3'' - \frac{5}{8}'' = 32\frac{3}{8}''$

$A_s = (12''/6''\,o.c.)(1.27\,IN^2) = 2.54\,IN^2$

$a = \frac{A_s f_y}{0.85 \cdot f_c' \cdot b} = \frac{(\downarrow)(60\,KSI)}{(0.85)(4\,KSI)(12'')} = 3.74''$

$\phi M_n = \phi A_s f_y \cdot (d - a/2)$

$= 0.9(2.54\,IN^2)(60\,KSI)(32\frac{3}{8} - \frac{1}{2})$ ✓

$= 4{,}184$ IN-KIPS

$M_u > \phi M_n$ HOWEVER M_u IS ONLY OVER A FINITE LENGTH OF CRANE MAT WHERE AS THE LENGTH OF WALLS ARE MUCH LONGER ✓

SUPPLY VS DEMAND $\frac{(\approx 20'\,OF\,WALL)(4{,}184\,IN\text{-}K)}{(\approx 10'\,OF\,MAT)(6610\,IN\text{-}K)} = 1.27$ O.K.

THE 2nd POSITION OF CRANE B WILL BE BEHIND EXIST WEST ABUTMENT

GROVE GMK 5220

SELF	SAY	160,300 lbs
CWT		169,700 lbs
PICK		43,000 lbs
		373,000 lbs

BOOM OUT OVER 1 OUTRIGGER

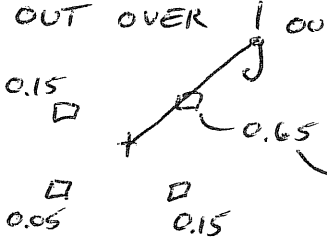

APPROX MAX OUTRIGGER (↑)(↓) = 243 KIPS

FOR 8'x8' MAT f_p = ↓/↑ = 3.8 KSF ✓ O.K. FOR TEMP.

THIS PRESSURE CREATES SURCHARGE ON ABUT, HOWEVER MAT IS NOT DIRECTLY BEHIND WALL

OUTRIGGER PRESSURE DOESN'T IMPACT LINE PROJECTED UP FROM HEEL OF FTG UNTIL ABOUT 5' BELOW GRADE. AT THAT POINT OUTRIGGER FORCE ISN'T DISTRIBUTED OVER 8'□ BUT RATHER SAY 16'□

$Q' = P/A' = 243K \div (16')(16') = 0.95$ KSF

$q = Q' \cdot K_a = (\downarrow)(\text{SAY } 0.33) = 0.313$ KSF

RYAN BIGGS
CLARK DAVIS

PROJECT NAME: RIVER ST OVER OTTER CREEK
DESCRIPTION:

PROJECT NO.: 11085
PAGE: S5
DATE: JULY 2015
BY: MAY
VDCM

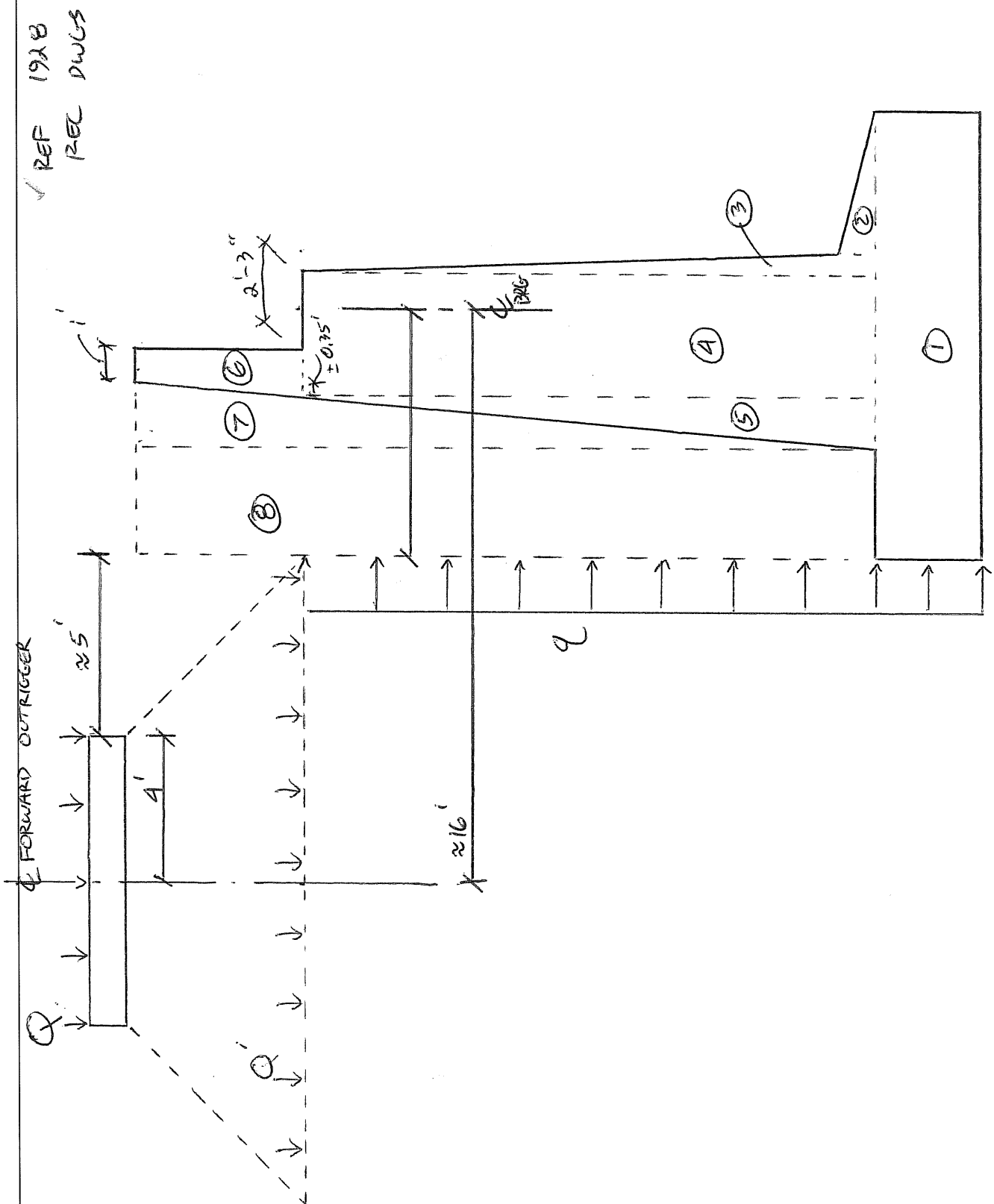

RYAN BIGGS
CLARK DAVIS

PROJECT NAME: RIVER ST OVER OTTER CREEK
DESCRIPTION:

PROJECT NO.: 11085
PAGE: S6
DATE: JULY 2015
BY: MGY
JDCM

	γ PCF		P (lbs)	a (ft)	M_R (ft lbs)
1	150	$12.5' \times 3' = 37.5\ FT^2$	5625	6.25	35,156
2	150	$(4'/2) \times 1' = 2\ FT^2$	300	2.67	801
3	150	$(\frac{7}{24}) \times 15' = 4.38\ FT^2$	656	4.19	2,752
4	150	$(3.6')(16') = 57.65\ FT^2$	8647	5.8	50,153
5	150	$(1.36')(16') = 21.73\ FT^2$	3260	8.64	28,156
6	150	$(\approx 1.1')(4'2'') = 4.58\ FT^2$	688	≈ 2.8'	1,925
7	125	$(1.7')(20.17'/2) = 17.14\ FT^2$	2,143	≈ 8.39'	17,978
8	125	$(3')(20.17') = 60.5\ FT^2$	7,564	≈ 11'	83,201
			Σ 28,883 lbs		Σ 220,122 ft-lb

SELF WT OF TRUSS IS SITTING ON BRIDGE SEAT & IN TURN OFFERS ADDITIONAL RESISTENCE TO SLIDING & OT

REC DWGS → END POST ← 176.5K C FROM DL ONLY

$R = (\downarrow) \sin 45° = 124.8K$

$M_{RESIST\ TRUSS} = (\downarrow)(5') = 624$ FT-KIPS

"NORMAL" SOIL PRESSURE

$$P_A = \frac{1}{2}(125\,pcf)(0.33)(24')^2 = 11.88\ K$$

$$M_{OT_A} = H/3 \cdot P_A = (24'/3)(\ ) = 95.\ \text{FT-K}$$

SURCHARGE PRESSURE

$$P_q = q \cdot H = (0.313\,KSF)(\approx 19') = 5.95\ K$$

$$M_{OT_q} = H/2 \cdot P_q = (19'/2)(\ ) = 56.5\ \text{FT-K}$$

FOS OT w/OUT CRANE OR TRUSS DL = 220.1 FT-K / 95 FT-K = 2.32

FOS OT w/ CRANE = 220.1 FT-K / (95 FT-K + 56.5 FT-K) = 1.45

FOS OT w/ CRANE & TRUSS DL $(220.1\ \text{FT-K}) + \left(\frac{624\ \text{FT-K}}{16'}\right) \div (\ ) = 1.71$ ✓

TRUSS DISTRIBUTED OVER EFFECTIVE WIDTH

O.K. FOR TEMP.

IT IS NOT CLEAR WHETHER EXIST WEST ABUT IS FOUNDED ON PILES.

CONSIDER A CHECK OF ABUT SLIDING:

OUTRIGGER IS ACTING ON A MUCH SMALLER SECTION OF WALL, EG A 1FT STRIP OF WALL CAN'T SLIDE LEAVING THE OTHER 31 FT BEHIND.

CONSIDER A MORE GLOBAL LOOK @ SLIDING

$$FOS = \frac{\left(\left[(\approx 32')(28.88k) + 2(124.8k)\right]\cdot 0.45\right) + (32')\left(\frac{1}{2}\right)\left(\frac{3.0}{1.25}\right)(0.125KLF)(6')^2}{(32')(11.88k) + (16')(5.95k) + (16')(5.95k)\left(\frac{0.15}{0.65}\right)}$$

SELF; TRUSSES; μ; K_p REDUCED; FILL IN FRONT; ADJACENT OUTRIGGER; ACTIVE; q_{MAIN} WORST OUTRIGGER; q_{MINOR}

$$\frac{701K}{497K} = 1.41 \quad \text{O.K. FOR TEMP.}$$

PROJECT NAME: RIVER ST OVER OTTER CREEK PROJECT NO.: 11085
DESCRIPTION: PAGE: SB
DATE: JUNE 2015
LIFTING CHECK BY: MGY ✓DCM

CONSIDER LIFTING OF GIRDER 4G4A w/ DIAPHRAGMS

$W_g = \Sigma P / \ell = 39K \div 121' = 322$ lb/FT → SAY 0.33 k/FT

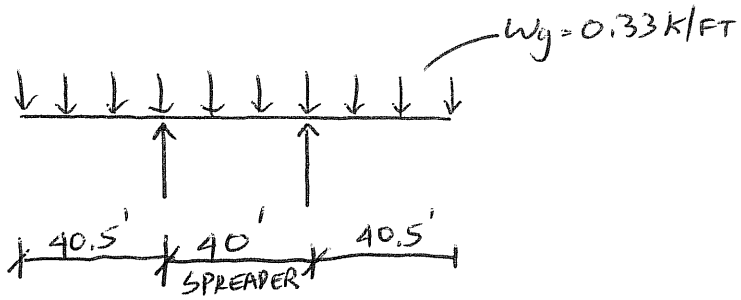

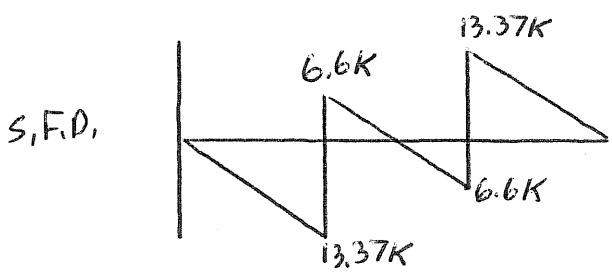

$M_g = (13.37K/2)(40.5') = 270.7$ FT-K

$f_b = M/S_x = (12''/FT)(\downarrow) \div 1649 \text{ IN}^3 = 2$ KSI
PS10

EVEN IF CONSIDERED UNBRACED FOR FULL ≈ 120 FT

FOS $F_{CR} \div f_b = 5.21$ KSI $\div \downarrow = +2.6 > 1.1$ ∴ O.K.
↑ PG S11

C GIRDER IS SHORTER ∴ O.K. BY INSP.

B GIRDER IS SHORTER & "STRONGER" ∴ O.K. BY INSP.

CONSIDER LIFTING OF GIRDER 5G5A w/ DIAPHRAGMS

$w_g = \Sigma P / \ell = 36^k \div 121' = 298$ lb/FT → SAY 0.3 k/FT

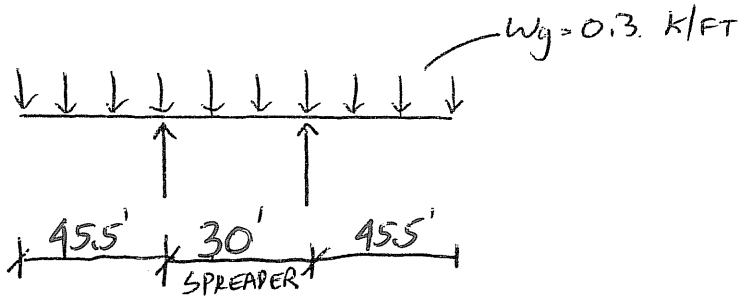

S.F.D.

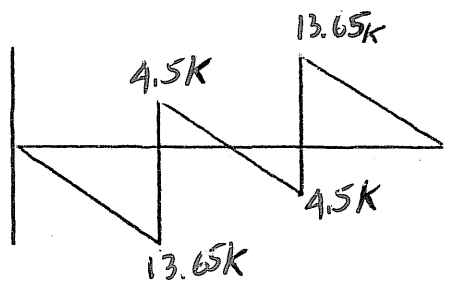

$M_g = (13.65K/2)(45.5') = 310.5$ FT-K

$f_b = M/S_x = (12''/FT)(\ ) \div 1649\ IN^3 = 2.3$ KSI
PS10

EVEN IF CONSIDERED UNBRACED FOR FULL ≈ 120 FT

FOS $F_{CR} \div f_b = 5.21$ KSI $\div$ ✓ $= +2.3 > 1.1$ ∴ O.K.
↑ PG S11

Ryan Biggs | Clark Davis
Engineering & Surveying, P.C.
257 Ushers Road, Clifton Park, New York
(518) 406-5506

JOB NO: 11085 DATE: June 2015 PG: S10
PROJECT: River Street over Otter Creek BY: MGY
SUBJECT: ALLOWABLE BENDING STRESSES

Spreadsheet solves the allowable bending formula from AASHTO Table 10.32.1A
See AASHTO page 250

√DCM

		PLTG A/C	PLTG B
WEB THICKNESS	**in**	**0.75**	**0.75**
HEIGHT OF WEB	**in**	**60**	**60**
BOTTOM THICKNESS	**in**	**1.125**	**2.5**
BOTTOM WIDTH	**in**	**18**	**18**
TOP THICKNESS	**in**	**1.125**	**2.5**
TOP WIDTH	**in**	**18**	**18**
UNBRACED LENGTH	**ft**	**120**	**60**
YIELD STRENGTH	**KSI**	**50**	**50**
TOTAL HEIGHT	in	62.25	65.00
WEB AREA	in^2	45.00	45.00
BOTTOM AREA	in^2	20.25	45.00
TOP AREA	in^2	20.25	45.00
y OF BOTTOM	in	0.56	1.25
y 0F WEB	in	31.13	32.50
y OF TOP	in	61.69	63.75
TOTAL AREA	in^2	85.50	135.00
SUM OF AREA*y	in^3	2661.19	4387.50
Y BAR	in	31.13	32.50
I OF BOTTOM	in^4	2.14	23.44
i OF WEB	in^4	13500.00	13500.00
I OF TOP	in^4	2.14	23.44
BOT DISTANCE	in^4	18914.84	43945.31
WEB DISTANCE	in^4	0.00	0.00
TTOP DISTANCE	in^4	18914.84	43945.31
I TOTAL (about XX)	**in^4**	**51333.96**	**101437.50**
Sx top (ie: comp. flange)	in^3	1649.28	3121.15
Sx bot	in^3	1649.28	3121.15
I of Bottom	in^4	546.75	1215.00
I of Web	in^4	2.11	2.11
I of Top	in^4	546.75	1215.00
I TOTAL (about YY)	**in^4**	**1095.61**	**2432.11**
Sy Top	in^3	121.73	270.23
Sy Bottom	in^3	121.73	270.23
unbraced length in inches	in	1440.00	720.00
J	in^4	25.52	195.94
I OF C FLANGE	in^4	546.75	1215.00
Sx of Compression Flang	in^3	1649.28	3121.15
	dv	11511	27033
	dv	0.054	0.205
	psi	2687	12238
FB(from aashto equ.)	ksi	2.69	12.24
USE FB (aashto, inv)	ksi	**2.69**	**12.24**
FB (aashto, opr.)=	ksi	**2.69**	**12.24**

Ryan Biggs | Clark Davis
257 Ushers Road, Clifton Park, New York
(518) 406-5506

JOB NO: 11085 DATE: June 2015 PAGE: S11
PROJECT: River St over Otter Creek BY: mgy
SUBJECT: Girder Stability

√DCM

Spreadsheet checks girder stabliity during erection using criticl buckling stress.

AC GIRDERS

Modulus of Elasticity	ksi	29000	29000	29000	29000	29000	29000	29000	29000	29000	29000	29000	29000	
Unbraced Length of Compression Flange	ft	12.5	42.5	55.5	57.5	72.5	87.5	102.5	117.5	132.5	147.5	160	172.5	115
Width of Compression Flange	in	18	18	18	18	18	18	18	18	18	18	18	18	" "
Thickness of Compression Flange	in	1.125	1.125	1.125	1.125	1.125	1.125	1.125	1.125	1.125	1.125	1.125	1.125	
Total Depth of Girder	in	62.25	62.25	62.25	62.25	62.25	62.25	62.25	62.25	62.25	62.25	62.25	62.25	
depth of web	in	60	60	60	60	60	60	60	60	60	60	60	60	
Web Thickness	in	0.75	0.75	0.75	0.75	0.75	0.75	0.75	0.75	0.75	0.75	0.75	0.75	
Unbraced Length	in	150	510	666	690	870	1050	1230	1410	1590	1770	1920	2070	
Area of Compression Flange	in^2	20.25	20.25	20.25	20.25	20.25	20.25	20.25	20.25	20.25	20.25	20.25	20.25	
Area of Web	in^2	45	45	45.00	45	45	45	45	45	45	45	45	45	
Dummy Variable	dv	1620	1620	1620	1620	1620	1620	1620	1620	1620	1620	1620	1620	
Dummy Variable	dv	1233	4193	5476	5673	7153	8633.3	10113	11593	13073.3	14553.33	15786.67	17020	
Dummy Variable	dv	1.725	0.149	0.088	0.082	0.051	0.035	0.026	0.020	0.015	0.012	0.011	0.009	
Dummy Variable	dv	1.770	0.194	0.132	0.126	0.096	0.080	0.070	0.064	0.060	0.057	0.055	0.054	
Critical Buckling Stress	ksi	**257.22**	**25.04**	**15.83**	**14.93**	**10.33**	**7.81**	**6.25**	**5.21**	**4.47**	**3.92**	**3.55**	**3.25**	5.36 KSI

SPAN 2 CRIT. SET

CRIT FOR PICKING

B GIRDERS

Modulus of Elasticity	ksi	29000	29000	29000	29000	29000	29000	29000	29000	29000	29000	29000	29000
Unbraced Length of Compression Flange	ft	12.5	42.5	55.5	57.5	72.5	87.5	102.5	117.5	132.5	147.5	160	172.5
Width of Compression Flange	in	18	18	18	18	18	18	18	18	18	18	18	18
Thickness of Compression Flange	in	2.5	2.5	2.5	2.5	2.5	2.5	2.5	2.5	2.5	2.5	2.5	2.5
Total Depth of Girder	in	65	65	65	65	65	65	65	65	65	65	65	65
depth of web	in	60	60	60	60	60	60	60	60	60	60	60	60
Web Thickness	in	0.75	0.75	0.75	0.75	0.75	0.75	0.75	0.75	0.75	0.75	0.75	0.75
Unbraced Length	in	150	510	666	690	870	1050	1230	1410	1590	1770	1920	2070
Area of Compression Flange	in^2	45	45	45.00	45	45	45	45	45	45	45	45	45
Area of Web	in^2	45	45	45.00	45	45	45	45	45	45	45	45	45
Dummy Variable	dv	1620	1620	1620	1620	1620	1620	1620	1620	1620	1620	1620	1620
Dummy Variable	dv	1050	3570	4662	4830	6090	7350	8610	9870	11130	12390	13440	14490
Dummy Variable	dv	2.380	0.206	0.121	0.112	0.071	0.049	0.035	0.027	0.021	0.017	0.015	0.012
Dummy Variable	dv	2.583	0.408	0.323	0.315	0.273	0.251	0.238	0.229	0.224	0.220	0.217	0.215
Critical Buckling Stress	ksi	**310.71**	**36.34**	**24.76**	**23.59**	**17.42**	**13.84**	**11.50**	**9.85**	**8.63**	**7.68**	**7.04**	**6.50**

CONSIDER GIRDER 10G5B SELF WT

$W_{5B} = P/\ell = 28{,}079 \text{ lbs} \div 60' = 467.9 \text{ lb/FT} \rightarrow$ SAY 0.47 K/FT ✓

CASCO BAY SHOP DWGS

CONSIDER GIRDER 15G5C SELF WT

$W_{5C} = P/\ell = 28451 \text{ lbs} \div 96.07' = 296.1 \text{ lb/FT} \rightarrow$ SAY 0.3 K/FT ✓

CONSIDER RAW GIRDER SPANNING FROM END ABUT TO PIER

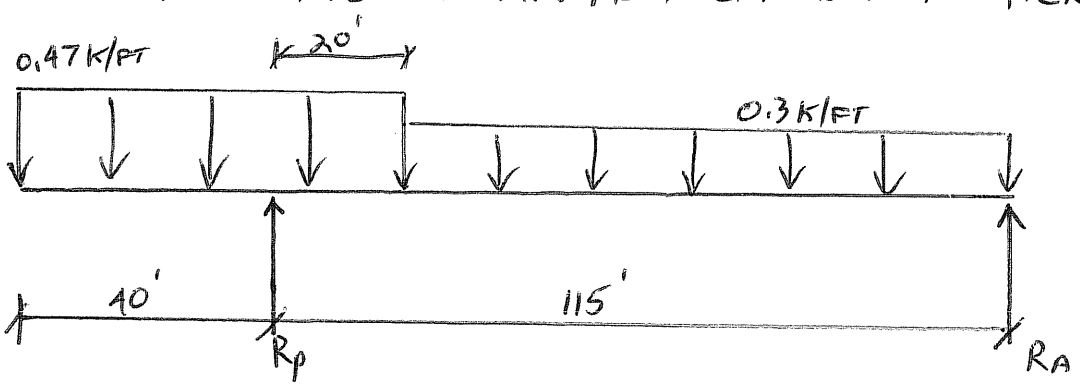

$\Sigma M @ A$ $\left[(95')(0.3K/FT)(95'/2) + (60')(0.47K/FT)(95' + 30')\right] \div 115' = 42.42$ K

$R_A = (95')(0.3K/FT) + (60')(0.47K/FT) - \downarrow = 14.28$ K

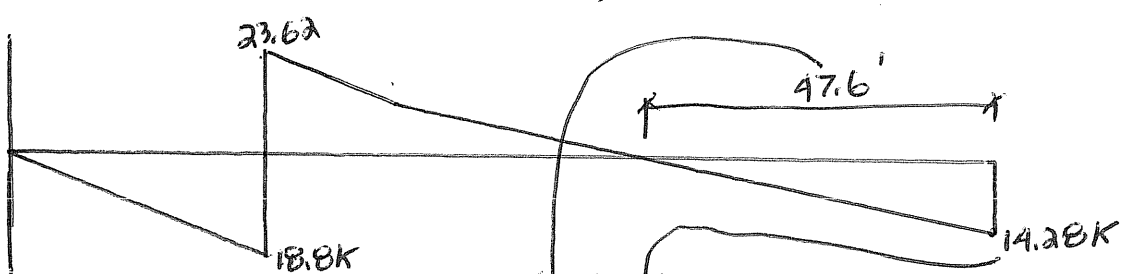

$M = (1/2)(\downarrow) = 340$ FT-K

FIRST GIRDER UP BY ITSELF COULD EXPERIENCE WIND LOAD

LET 100MPH = 50 PSF

WIND SPEED REDUCED BY CRANE OPERATIONS TO 20 MPH

USE 25MPH FOR ANALYSIS

$$50\,PSF\left(\frac{25\,MPH^2}{100\,MPH^2}\right) = 3.1\,PSF$$

$$w = (\downarrow)(65'') = 16.9\,lb/FT \longrightarrow \text{SAY } 20\,lb/FT \ldots \quad 10\,lb/FT \text{ TO EA FLANGE}$$

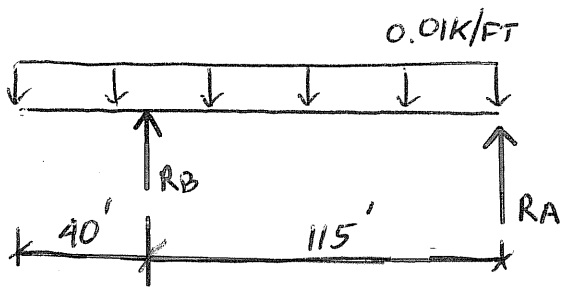

$\Sigma M @ A$

$$(0.01K/FT)(155')\left(\frac{155'}{2}\right) \div 115'$$

$$= 1.04\,K = R_B$$

$$R_A = (0.01K/FT)(155') - \downarrow = 0.505K$$

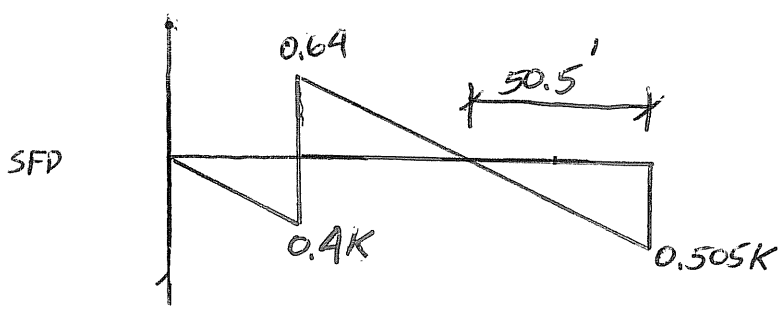

$$M_w = (0.505K/2)(50.5') = 12.75\,FT\text{-}KIPS$$

CONSIDER COMBINED GRAV & LAT STRESSES DURING SETTING

PG S12

$f_{bg} = M/S_x = (12''/FT)(340\ FT\text{-}K) \div 1{,}649\ IN^3 = 2.47\ KSI$

$f_{bw} = M/S_y = (12''/FT)(12.75\ FT\text{-}K) \div \frac{1}{6}(1\tfrac{1}{8}'')(18'')^2 = 2.52\ KSI$

PG13

$\Big\}\ 4.99\ KSI$

FACTOR OF SAFETY COMBINED STRESS IS $\frac{5.36\ KSI}{} = 1.07 < 1.1$

NEED TO REDUCE UNBRACED LENGTH &/OR ATTEMPT TO REDUCE WIND STRESS &/OR REDUCE GRAVITY STRESS

PROVIDE SHORING TOWER → 55.5' FROM END ABUT 59.5' FROM PIER

THIS WILL REDUCE GRAVITY & WIND STRESSES

for @ lub ≈ 59.5' (APPROX FROM PG S11)

SIMPLE APPROACH $\frac{14.9\ KSI}{4.99\ KSI} \approx 3$ O.K. ✓

ACTUAL STRESSES UNCHANGED

KEEP

USE SHORING TOWER TO SUPPORT / BRACE 1ST C GIRDER

CONSERVATIVELY ASSUME TOWER SUPPORTS FULL WEIGHT OF C GIRDER; i.e., P ≈ 30 K

UPPER BEAM HP12 x 53

$M = Pl/4 = (30K)(6') \div 4 = 45$ FT-K

lub only 6'

$f_b = M/S_x = (12''/FT)(\downarrow) \div 66.7\ IN^3 = 8.1$ KSI $< F_B = 27.5$ KSI ∴ OK.

$f_v = V/A = 30K \div 2(11.8'')(0.435'') = 2.9$ KSI $< F_v = 16.5$ KSI O.K.

LOWER BEAMS HP12 x 53

SAME SPAN AS UPPER BUT HALF AS MUCH LOAD... O.K. BY INSP.

RD ft $f_p = R/A = 30K \div (4)(3')(3') = 0.83$ KSF O.K. BY INSP.

≈ 0.006 KSI

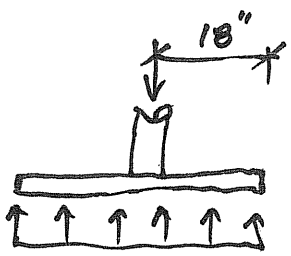

$M = \frac{1}{2}(\downarrow)(18'')(18'') = 0.94$ IN-K

$f_b = \downarrow \div \frac{1}{6}(1'')(1'')^2 = 5.6$ KSI $< F_B$

O.K. BY INSP.

Ryan-Biggs | Clark Davis
257 Ushers Road, Clifton Park, New York
(518) 406-5506

JOB NO: 11085 DATE: 30-Jun PG: 516
PROJECT: River St over Otter Creek BY: MGY
SUBJECT: ALLOWABLE Brace Compression

√DCM

RYAN-BIGGS

Calculate the allowable compression in the timber brace used for girder stability at the abutment, pier, or tower. Reference AASHTO & NDS

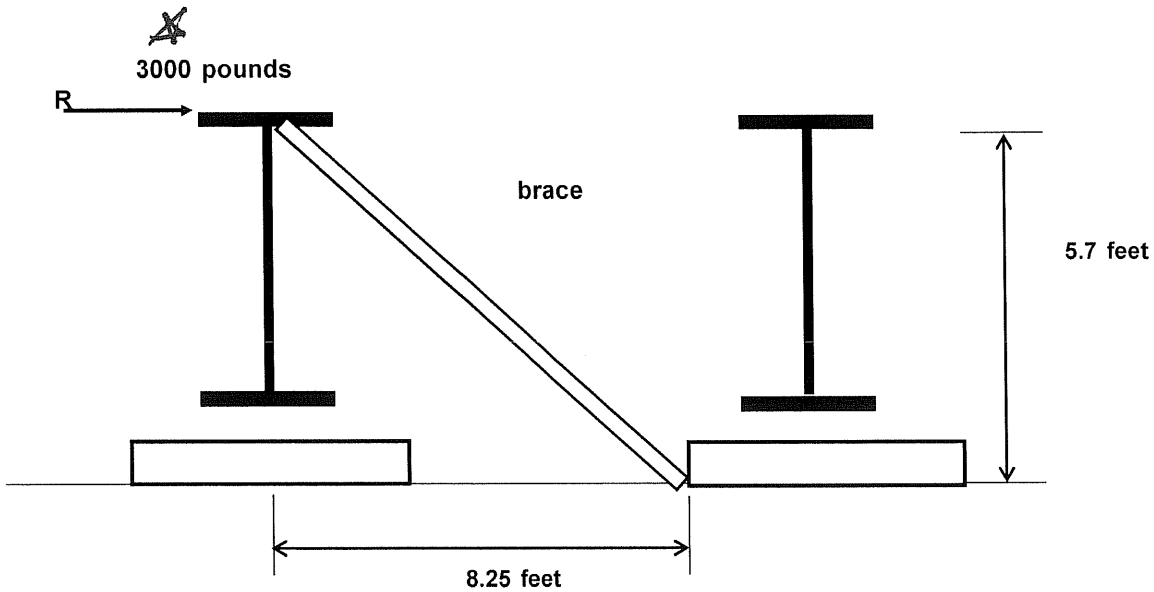

Unbraced length **10 feet**

Brace Compression R x (H/X) = **3646** pounds

Use Southern Yellow Pine No.2 Non dense; From NDS Supplement Table 4B, Page 32:

Modulus of Elasticity	**E**	**psi**	**1,600,000**	**Timber:**	**d, inches**	**5.50**
Comp. parallel to grain	**Fc**	**psi**	**525**		**b, inches**	**5.50**

Let end condition coefficient, K = **1.50**

Slenderness ratio = K * L / d = **32.82**

For Load duration let CD = **1.25** Other adjustments = 1.0 based on various tables
For wet condition use Cm = **1.00**

Adjusted Allowable compression parallel to grain = Fc* = Fc x CD x Cm x CF x Ci = **656** psi

Euler Buckling Design Value = 0.3 x E / (KL/d)^2 = **445.69** psi

Buckling Coefficient = Cp = $\frac{1 + FCE / Fc^*}{2C} - \sqrt{\left[\frac{1+(Fce/Fc^*)}{2C}\right]^2 - \left[\frac{Fce/Fc^*}{C}\right]}$ = **0.547**

Adjusted Allowable compression parallel to grain = Fc' = Fc* x Cp = **359** psi

Allowable brace compression = Fc' x b x d = **10859** pounds

CONTINUITY FACTOR

MAX BRACE LOAD

(10 lb/FT)(≈60')(1.25) = 750 lbs → USE 3 KIPS FOR SIMPLICITY & TO BE CONSERVATIVE

MAX TRIB

ERECTION SUBMITTAL R1

TH 8 (RIVER STREET) OVER OTTER CREEK
BRIDGE NO: 2 (TH 8)
BRF 3000 (16)

DATE: 7/15/15

FOR:

STATE OF VERMONT
AGENCY OF TRANSPORTATION
1 NATIONAL LIFE DRIVE
MONTPELIER, VT 05633

BY:

KOBY GREENE
D.A. COLLINS CONSTRUCTION
269 BALLARD ROAD
WILTON, NY 12831
518-664-9855

TABLE OF CONTENTS:

CRANE CHARTS AND DIMENSIONS…….....…….....1-6

RIGGING CUT SHEETS……..…...……...7-11

CRANE A

156,500 lb Counterweight - Fully Extended Outriggers - 360° Rotation
(All Capacities Are Listed In Pounds)

Radius (ft)	Boom Length (ft)													Radius (ft)
	43.7	57.4-58.9	71.1-74.5	85.3-90.7	99.6-105.4	114.2-119.7	128.9-135.9	145-147.1	159.3-163.3	176.8-177.5	190.5-193.1	206.8-209.3	223	
8	550,000*													8
10	350,000	303,000	268,900	225,200										10
12	313,900	302,400	268,900	225,200										12
15	274,100	275,700	252,900	211,500	170,500									15
20	224,600	226,900	225,300	211,500	170,500	142,800	102,900							20
25	187,500	191,300	189,000	190,100	168,800	142,800	119,000	84,500	70,200					25
30	159,900	163,900	162,700	163,000	159,400	142,800	113,200	84,500	70,200	55,200	35,500			30
35	138,500	142,700	142,600	142,000	140,500	141,800	102,900	84,500	70,200	55,200	45,600	34,300		35
40		125,900	125,900	125,300	124,000	125,200	102,900	79,300	70,200	55,200	45,600	36,700	30,100	40
45		110,100	110,100	109,600	111,500	109,700	102,900	74,300	70,200	55,200	45,600	36,700	30,100	45
50		94,800	97,300	96,800	98,700	97,000	96,100	69,900	66,000	55,200	45,600	36,700	30,100	50
55			88,600	86,200	88,100	86,500	88,100	66,000	61,200	54,800	45,600	36,700	30,100	55
60			79,800	80,100	79,300	78,000	79,400	62,300	56,800	52,000	44,800	36,700	30,100	60
65			66,300	71,700	70,800	72,900	71,000	59,100	53,000	49,400	42,200	36,700	30,100	65
70				64,500	63,700	65,800	63,900	56,300	49,500	46,800	39,500	36,700	30,100	70
75				58,400	57,700	59,600	57,800	53,700	46,400	43,900	37,400	36,700	30,100	75
80				50,200	54,500	54,300	52,400	51,400	43,500	41,300	35,500	34,900	30,100	80
85					50,900	49,800	48,000	49,200	41,000	39,000	33,700	32,800	30,100	85
90					46,900	45,700	44,000	45,500	38,700	36,800	32,100	30,900	30,100	90
95					36,400	42,100	42,200	41,900	36,500	34,800	30,600	29,300	29,200	95
100						38,900	40,500	38,600	34,600	32,900	29,200	27,900	27,600	100
105						36,100	37,600	35,700	32,900	31,200	27,800	26,700	26,100	105
110						29,800	34,900	33,300	31,600	29,700	26,600	25,500	24,700	110
115							32,700	30,900	30,400	28,200	25,500	24,300	23,400	115
120							29,400	28,700	29,300	26,800	24,400	23,300	22,200	120
125							22,000	26,700	27,600	25,500	23,200	22,300	21,000	125
130								24,900	25,800	24,300	22,000	21,400	20,000	130
135								23,300	24,100	22,700	21,000	20,400	19,000	135
140									22,600	21,200	19,900	19,600	18,000	140
145									21,200	19,700	19,000	18,800	17,100	145
150									19,800	18,400	18,100	18,100	16,300	150
155										17,300	17,200	17,400	15,500	155
160										16,100	16,200	16,600	14,800	160
165										15,000	15,100	15,900	14,000	165
170											14,100	15,000	13,400	170
175											13,200	14,000	12,700	175
180											12,700	13,100	12,100	180
185												12,300	11,200	185
190												11,500	10,400	190
195												8,700	9,600	195
200												7,800	8,900	200
205													8,200	205

Note: Capacities depict multiple boom modes.

* Over rear intermediate outriggers additional equipment required.

This information is not for crane operation. Operator must refer to the in−cab information for crane operation. Rated lifting capacities shown on fully extended outriggers do not exceed 85% of the tipping loads.

General Dimensions

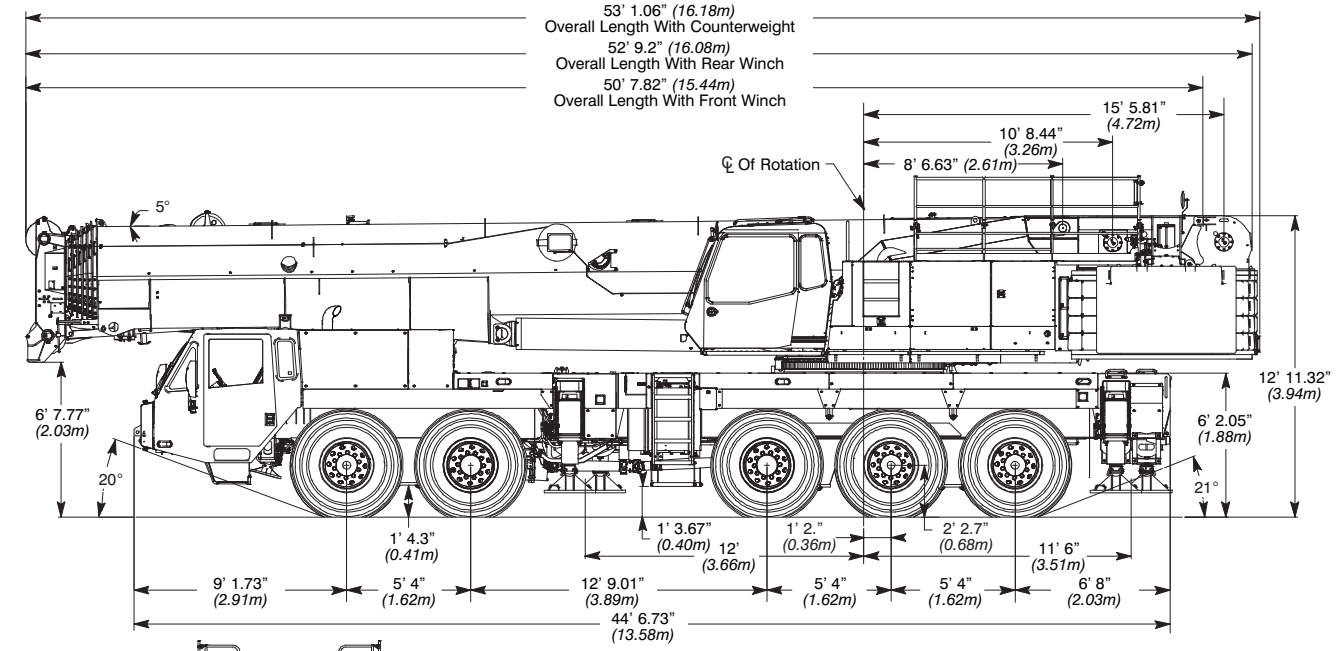

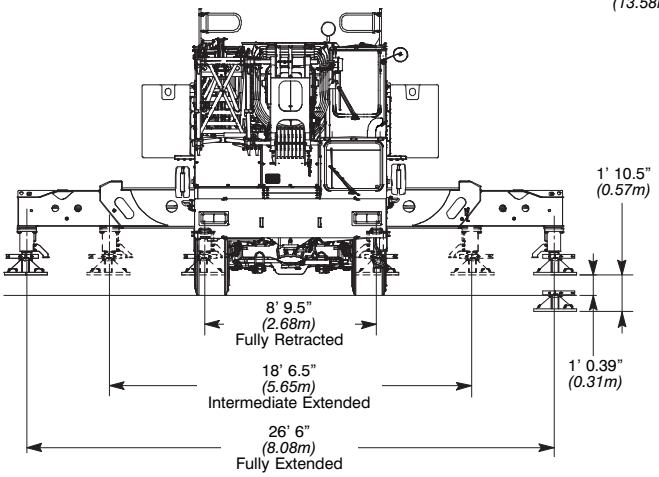

Turning Radius	20.5R25		16.00R25	
	English	*Metric*	English	*Metric*
Wall to wall over carrier	42' 0"	*12.8m*	41".6"	*12.6m*
Wall to wall over boom	42' 6"	*12.9m*	42' 2"	*12.8m*
Wall to wall over boom attachment	44' 11"	*13.7m*	44' 6"	*13.5m*
Curb to curb	37' 1"	*11.3m*	36' 3"	*11.04m*
Centerline of tire	36' 2"	*11.0m*	35' 6"	*10.8m*

Tail Swing	English	*Metric*
With auxiliary winch	16' 11"	*5.1m*
Without auxiliary winch	14' 8"	*4.7m*
With Counterweight	17' 1"	*5.21m*

Overall Width	English	*Metric*
With 14,000 lb (6 350*kg*) counterweight	9' 10"	*3.0m*
With 36,000−115,000 lb (16 329−*52 390kg*) counterweight	10' 3"	*3.1m*
With 156,500 lb (*70 987kg*) counterweight	15' 2"	*4.6m*

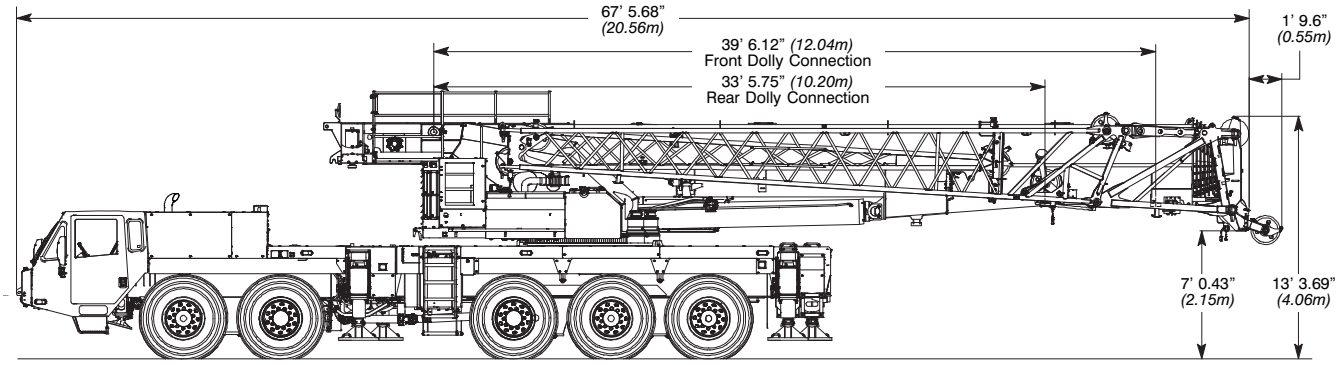

Not To Scale

Axle Loads — English

Base crane with full tanks of fuel and no counterweight	Gross Vehicle Weight (1)	Axle 1	Axle 2	Axle 3	Axle 4	Axle 5
	lb	lb	lb	lb	lb	lb
	133,792	27,095	26,620	26,296	26,991	26,791
Driver in carrier cab	250	177	177	-34	-34	-34
Remove pontoons	-431	-15	-15	-134	-134	-134
Ether injector	5	4	4	-1	-1	-1
Rear pintle hook	44	-13	-13	23	23	23
16.00R25 (445/95R25) tires (instead of standard)	-1,008	-202	-202	-202	-202	-202
Carrier cab strobe light	5	4	4	-1	-1	-1
Hoist drum follower - main	96	-25	-25	49	49	49
Auxiliary winch with 725 ft (*221m*) of 7/8” (*22mm*) wire rope	3,090	-958	-958	1,668	1,668	1,668
Remove auxiliary winch with 725 ft (*221m*) of 7/8” (*22mm*) wire rope	-2,923	925	925	-1,591	-1,591	-1,591
Hoist drum follower - auxiliary	96	-36	-36	56	56	56
Remove 950 ft (*289.5m*) of wire rope from front (main) winch	-1,454	334	334	-707	-707	-707
Remove 725 ft (*221m*m) of wire rope from rear (auxiliary) winch	-1,109	303	303	-572	-572	-572
Substitute 725 ft (*221mm*) of rope with 950 ft (*289.5m*) of rope - rear (auxiliary)	344	-94	-94	177	177	177
Substitute 950 ft (*289.5m*) of rope with 725 ft (*221m*) of rope - front (main)	-344	79	79	-167	-167	-167
360° mechanical swing lock	151	-52	-52	85	85	85
Boom launching option	77	-10	-10	32	32	32
Floodlight to the front of the boom base section	7	5	5	-1	-1	-1
Fy mounting brackets to boom base section for fly options	309	145	145	6	6	6
12 ft (*3.65m*) manual and hydraulically offsettable, lattice fly - stowed	2,291	1,718	1,718	-382	-382	-382
12-40 ft (*3.65-12.2m*) manual and hydraulically offsettable, two-piece (bi-fold) lattice fly - stowed	3,825	2,133	2,133	-147	-147	-147
12-40-67 ft (*3.65-12.2-20.4m*) manual and hydraulically offsettable, three-piece (bi-fold) lattice fly - stowed	4,981	2,371	2,371	80	80	80
Additional components for hydraulically offsettable fly	422	211	211	0	0	0
Auxiliary lifting sheave	112	102	102	-31	-31	-31
40 ton (*36.3mt*) 1 sheave hook block at front bumper	1,450	1,138	1,138	-275	-275	-275
66 ton (*60mt*) 3 sheave hook block at front bumper	1,900	1,491	1,491	-360	-360	-360
100 ton (*91mt*) 5 sheave hook block at front bumper	2,250	1,765	1,765	-427	-427	-427
140 ton (*127mt*) 7 sheave hook block at front bumper	2,850	2,236	2,236	-541	-541	-541
200 ton (*181mt*) 10 sheave hook block at front bumper	3,200	2,511	2,511	-607	-607	-607
12 ton (*10.9mt*) hookball at front bumper	722	566	566	-137	-137	-137

(1) Adjust gross vehicle weight and axle loading according to component weight. All weights are ±3%.

Tire	Maximum Axle Load @ 50 mph Average Speed
20.5R25 (525/80R25) on aluminum disc wheels	28,004 lb
16.00R25 (445/95R25) on aluminum disc wheels	29,224 lb

CRANE B

Load charts
Main boom

13,3 m - 68 m (44 ft - 223 ft) | 77 000 kg (169,700 lb) | 26 ft 7 in spread (100%) | 360˚

Pounds x 1000

Feet	43.7'	59.1'	74.3'	89.3'	104.2'	119.1'	133.4'	148.8'	164.0'	179.0'	193.9'	208.7'	223.1'
8	*550.0												
10	346.0	332.0	312.0	244.0									
15	272.0	270.0	260.0	242.0	185.0								
20	220.0	222.0	215.0	212.0	182.0	144.0	106.0						
25	184.0	185.0	181.0	181.0	166.0	140.0	106.0	86.0					
30	152.0	157.0	157.0	155.0	151.0	129.0	105.0	86.0	69.0	55.0	45.0		
35		136.0	136.0	135.0	136.0	118.0	96.0	86.0	69.0	55.0	45.0	36.4	
40		121.0	119.0	118.0	120.0	108.0	88.0	82.0	69.0	55.0	45.0	36.4	30.8
45		99.0	106.0	104.0	106.0	99.0	81.0	75.0	68.0	55.0	45.0	36.4	30.8
50			95.0	93.0	95.0	92.0	76.0	70.0	63.0	55.0	45.0	36.4	30.8
55			83.0	84.0	85.0	85.0	72.0	64.0	59.0	52.0	45.0	36.4	30.8
60				76.0	77.0	79.0	67.0	59.0	54.0	49.0	44.0	36.4	30.8
65				70.0	70.0	72.0	63.0	54.0	50.0	46.0	41.2	36.4	30.8
70				63.0	64.0	66.0	60.0	50.0	47.0	43.4	39.0	36.0	30.8
75				50.0	58.0	61.0	57.0	46.0	43.0	40.4	36.8	34.4	30.8
80					53.0	55.0	54.0	42.8	39.6	37.6	34.8	32.6	30.4
85					49.0	51.0	51.0	40.2	37.2	35.2	33.0	31.0	29.2
90					39.2	46.0	48.0	37.6	34.6	32.8	31.2	29.4	28.0
95						42.4	44.0	35.2	32.4	30.8	29.4	28.0	26.8
100						38.2	40.8	33.2	30.4	28.8	27.8	26.4	25.6
105							37.6	31.4	28.8	27.2	26.4	24.8	24.4
110							34.8	29.6	27.0	25.6	24.8	23.0	23.2
115							30.4	28.0	25.2	23.8	23.0	21.4	22.0
120								26.6	23.2	21.8	21.2	20.4	20.8
125								25.2	21.4	20.0	19.4	19.4	19.4
130								24.4	20.2	19.0	18.4	18.4	18.0
135									19.2	18.0	17.4	17.4	17.2
140									18.2	17.0	16.4	16.6	16.4
145									17.2	16.0	15.6	15.8	15.6
150									12.8	15.4	14.8	15.0	15.0
155										14.8	14.0	14.2	14.2
160										14.4	13.2	13.4	13.6
165											12.6	12.8	13.0
170											11.8	12.2	12.4
175											11.4	11.6	11.8
180												11.0	11.2
185												10.6	10.6
190												9.6	10.2
195													9.6
200													9.2

** Over the rear with special equipment*

Loads greater than 297,000 lb/335,000 lb can only be lifted with additional/special equipment.

THIS CHART IS ONLY A GUIDE AND SHOULD NOT BE USED TO OPERATE THE CRANE.
The individual crane's load chart, operating instructions and other instructional plates must be read and understood prior to operating the crane

Dimensions
Mercedes-Benz (Tier 3)

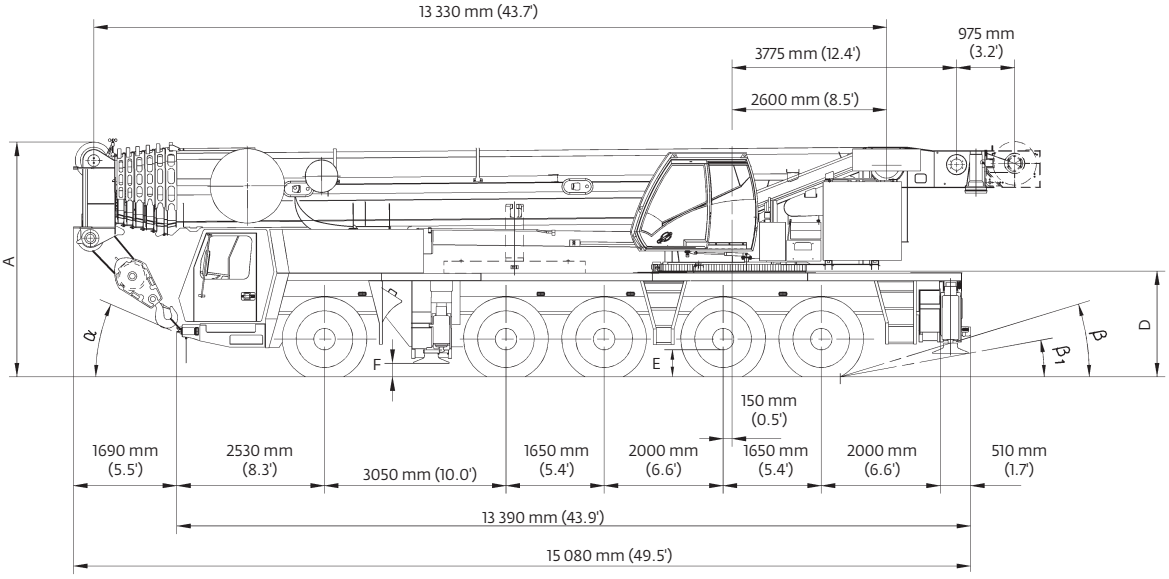

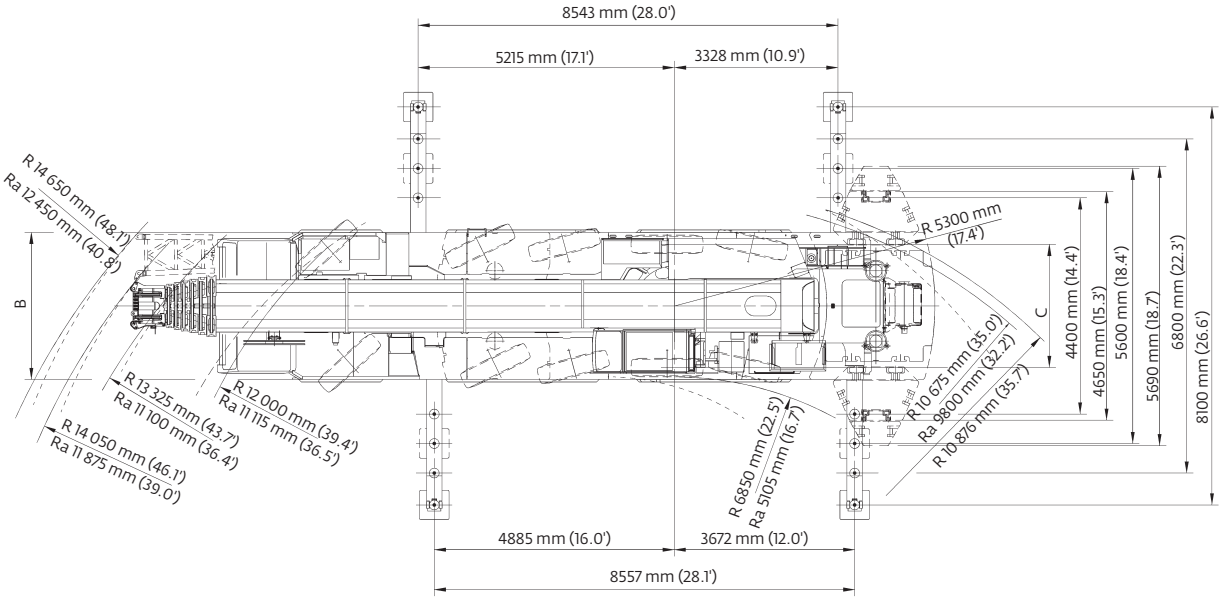

Tires	A	A *130 mm (0.4')	B	C	D	E	F	α	β	β 1
14.00 R25	3950 mm (13')	3820 mm (12.5')	2990 mm (9.8')	2570 mm (8.4')	1780 mm (5.8')	400 mm (1.3')	228 mm (0.7')	23°	15°	10°
16.00 R25	4000 mm (13.1')	3870 mm (12.7')	3000 mm (9.8')	2510 mm (8.2')	1830 mm (6.0')	450 mm (1.5')	258 mm (0.8')	25°	17°	12°
20.5 R25	4000 mm (13.1')	3870 mm (12.7')	3000 mm (9.8')	2530 mm (8.3')	1830 mm (6.0')	450 mm (1.5')	258 mm (0.8')	25°	17°	12°

Ra = Radius all wheels steered
*Lowered

Weights
Mercedes-Benz (Tier 3)

Trailing boom

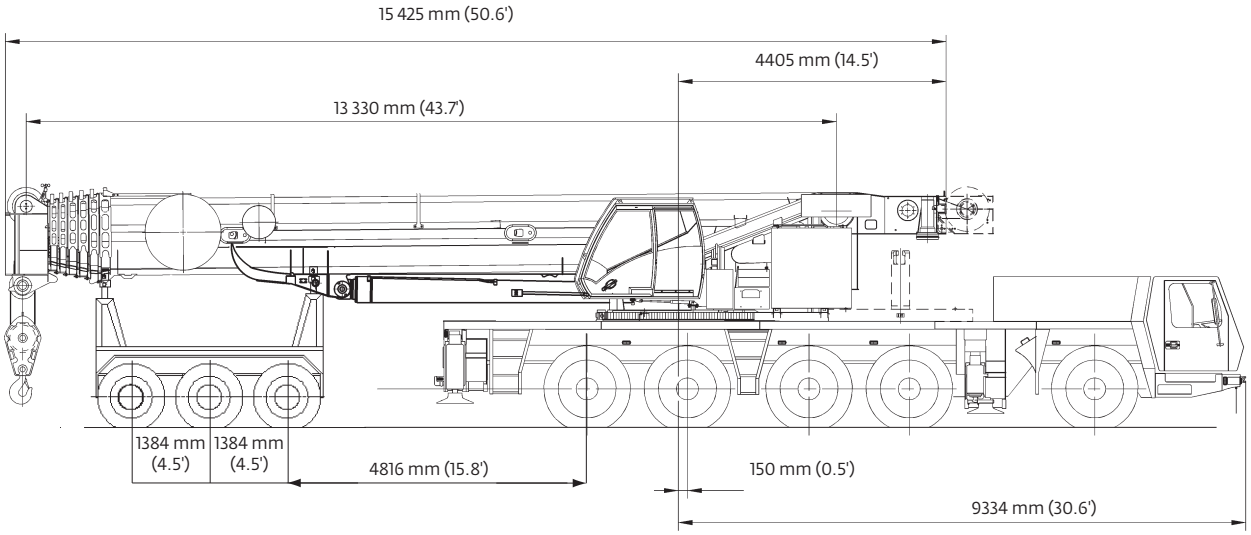

Basic weights - kg (lb)	Axles 1-3		Axles 4 and 5		Dolly		Total	
GMK 5275 Mercedes power Tier 3 with: 20.5R25 tires, 10x8x10 drive/steer, 11 m-18m (36-59 ft) hydraulic luffing swingaway, 2nd oil cooler, outrigger pads, auxiliary hoist, driver and tanks filled, 3 axle boom dolly (4309 kg / 9400 lb)	27 881	(61,467)	20 119	(44,355)	20 079	(44,267)	68 079	(150,089)
Additions:								
5000 kg (11 000 lb) section pinned to superstructure (special counterweight version)	4831	(10,651)	169	(373)	0	(0)	5000	(11,023)
11 000 kg (24,250 lb) base section stowed on carrier	10 629	(23,433)	371	(818)	0	(0)	11 000	(24,251)
Removals:								
Brackets for hydraulic swingaway incl. hose reel	- 8	(-18)	- 4	(-9)	- 257	(-567)	- 270	(-595)
11 m - 18 m (36 ft - 59 ft) hydraulic swingaway	- 345	(-761)	- 176	(-388)	-1489	(-3283)	-2010	(-4431)
Front outriggers	-2190	(-4828)	300	(661)	0	(0)	-1890	(-4167)
Rear outriggers	1338	(2950)	-3678	(-8109)	0	(0)	-2340	(-5159)
Front and rear outrigger floats	- 59	(-130)	- 141	(-311)	0	(0)	- 200	(-441)
Substitutions:								
10x6x10 drive/steer	- 316	(-697)	- 39	(-86)	0	(0)	- 355	(-783)
14.00R25 tires	- 612	(-1349)	- 408	(-899)	0	(0)	-1020	(-2249)
16.00R25 tires	- 252	(-556)	- 168	(-370)	0	(0)	- 420	(-926)

Boom over front						
Basic weights - kg (lb)	**Axles 1 - 3**		**Axles 4 and 5**		**Total**	
Mercedes power Tier 3, 16.00R25 tires, 10x6x10 drive/steer, 2nd oil cooler, outrigger pads, driver and tanks filled	34 340	(75,707)	24 645	(54,333)	58 985	(130,040)
Additions:						
10x8x10 drive/steer	316	(697)	39	(86)	355	(783)
Spare wheel 14.00 R25 XGC steel rim with stowage	- 186	(-410)	446	(983)	260	(573)
Spare wheel 16.00 R25 XGC steel rim with stowage	- 229	(-505)	549	(1210)	320	(705)
Spare wheel 20.5 R25 XGC steel rim with stowage	- 259	(-571)	621	(1369)	362	(798)
Brackets for hydraulic swingaway	92	(203)	- 12	(-26)	80	(176)
Hose reel + parts for hydraulic swingaway	339	(747)	- 149	(-328)	190	(419)
11 m - 18 m (36 ft - 59 ft) hydraulic swingaway	2321	(5117)	- 311	(-686)	2010	(4431)
Auxiliary hoist	-1417	(-3124)	3157	(6960)	1740	(3836)
11 000 kg (24,250 lb) base plate stowed on carrier	10 581	(23,327)	369	(814)	10 950	(24,141)
5000 kg (11,000 lb) slab fixed to turntable (special counterweight version)	-3452	(-7610)	8432	(18,589)	4980	(10,979)
Substitutions:						
14.00R25 tires	- 360	(-794)	- 240	(-529)	- 600	(-1323)
20.5R25 tires	252	(556)	168	(370)	420	(926)
Removals:						
Boom assembly w/o lift cylinder	-19 612	(-43,237)	-1523	(-3358)	-21 135	(-46,595)
Front outriggers	-2213	(-4879)	303	(668)	-1910	(-4211)
Rear outriggers	1326	(2923)	-3646	(-8038)	-2320	(-5115)
Front and rear outrigger floats	- 59	(-130)	- 141	(-311)	- 200	(-441)

EYE AND EYE WIRE ROPE SLINGS

SLING LOOP EACH END

ALL-LIFTS , INC. STANDARD SLING ORDER CODE 11-1E-1E

	CAPACITY IN TONS						
DIA.	VERT.	CHKR.	VERT. BASKET	LOOP SIZE (IN.)	HOOK SIZE TONS	MIN. SLING LENG. (IN.)	MIN. SLING LENGTH 11-1HT-1HT
6 X 25 EIP IWRC							
1/4"	0.7	0.5	1.3	2 x 4	0.75	13	9
5/16"	1.0	0.8	2.0	2-1/2 x 5	1.0	16	11
3/8"	1.4	1.1	2.9	3 x 6	1.5	20	13
7/16"	1.9	1.5	3.9	3-1/2 x 7	2.0	23	15
1/2"	2.5	1.9	5.0	4 x 8	2.0	26	16
9/16"	3.2	2.4	6.4	4-1/2 x 9	3.0	29	17
5/8"	3.9	2.9	7.8	5 x 10	4.0	33	20
3/4"	5.6	4.2	11.2	6 x 12	5.0	44	25
7/8"	7.6	5.7	15.2	7 x 14	7.5	46	27
1"	9.8	7.4	19.6	8 x 16	10.0	52	30
6 X 37 EIP IWRC							
1-1/8"	12.4	9.3	24.8	9 x 18	15.0	59	24
1-1/4"	15.0	11.3	30.0	10 x 20	15.0	65	36
1-3/8"	18.0	13.5	36.0	11 x 22	20.0	72	42
1-1/2"	21.0	15.8	42.0	12 x 24	20.0	78	45
1-3/4"	28.0	21.0	56.0	14 x 28	22A	89	NA
2"	37.0	27.8	74.0	16 x 32	37A	101	NA
2-1/4"	44.0	33.0	88.0	18 x 36	45A	115	NA
2-1/2"	54.0	40.5	108.0	20 x 40	NA	127	NA
2-3/4"	65.0	48.8	130.0	22 x 44	NA	139	NA
3"	77.0	57.8	154.0	24 x 48	NA	150	NA
3-1/2"	102.0	76.5	204.0	28 x 56	NA	175	NA

11-1E-1E

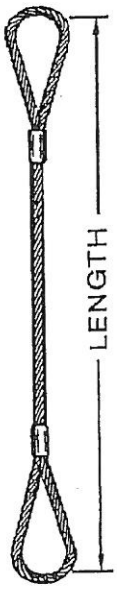

11-1E-TH-1HT

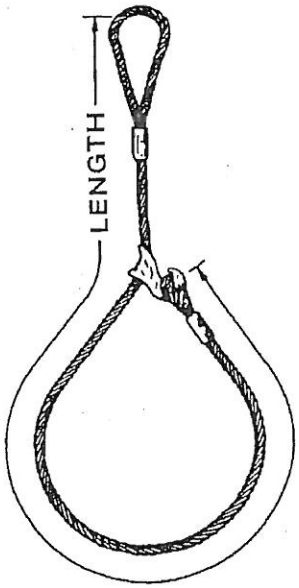

11-1E-1E

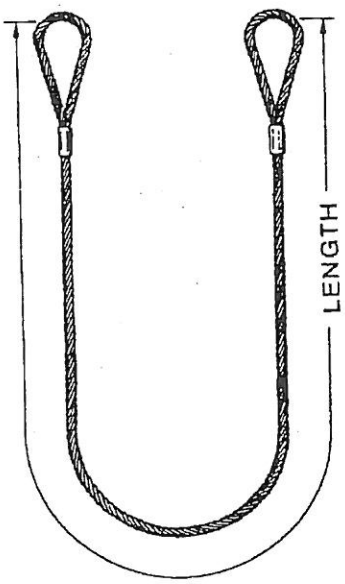

Endless Roundslings

Size	Part #	Color	Rated Capacity (lbs.)* Vertical	Choker	Vertical Basket	Minimum Length (ft.)	Aprox. Weight (lbs./ft.)	Approx. Body Dia. Relaxed (in.)	Approx. Width At Load (in.)
1	E30	Purple	2,600	2,100	5,200	1.5	0.3	0.50	1.375
2	E60	Green	5,300	4,200	10,600	1.5	0.4	0.62	1.68
3	E90	Yellow	8,400	6,700	16,800	2.0	0.5	0.87	1.75
4	E120	Tan	10,600	8,500	21,200	3.0	0.7	1.12	2.0
5	E150	Red	13,200	10,600	26,400	3.0	0.8	1.25	2.50
6	E180	White	16,800	13,400	33,600	3.0	1.0	1.50	2.75
7	E240	Blue	21,200	17,000	42,400	3.0	1.2	1.75	3.25
8	E300	Orange	25,000	20,000	50,000	3.0	1.7	2.25	3.75
9	E360	Grey	31,000	24,800	62,000	3.0	2.1	2.32	4.00
10	E480	Maroon	40,000	32,000	80,000	8.0	2.5	2.50	4.25
11	E600	Brown	53,000	42,400	106,000	8.0	3.4	2.75	4.62
12	E800	Olive	66,000	52,800	132,000	8.0	3.7	3.00	5.25
13	E1000	Black	90,000	72,000	180,000	8.0	4.2	3.62	6.00

Crosby® Screw Pin Shackles

Load Rated® Fatigue Rated® "QT" QUENCHED & TEMPERED QUIC-CHECK® MAXTOUGH® "TA" TYPE APPROVED

SCREW PIN ANCHOR SHACKLES

G-209 S-209

Screw pin anchor shackles meet the performance requirements of Federal Specification RR-C-271D Type IVA, Grade A, Class 2, except for those provisions required of the contractor. For additional information, see page 391.

- Capacities 1/3 thru 55 metric tons.
- Forged - Quenched and Tempered, with alloy pins.
- Working Load Limit permanently shown on every shackle.
- Hot Dip galvanized or Self Colored.
- Fatigue rated.
- Shackles 25t and larger are **RFID EQUIPPED.**
- Shackles can be furnished proof tested with certificates to designated standards, such as ABS, DNV, Lloyds, or other certification. Charges for proof testing and certification available when requested at the time of order.
- Shackles are Quenched and Tempered and can meet DNV impact requirements of 42 joules at -20 C.
- Crosby products meet or exceed all requirements of ASME B30.26 including identification, ductility, design factor, proof load and temperature requirements. Importantly, Crosby products meet other critical performance requirements including fatigue life, impact properties and material traceability, not addressed by ASME B30.26.
- Look for the Red Pin® . . . the mark of genuine Crosby quality.
- Type Approval and certification in accordance with ABS 2006 Steel Vessel Rules 1-1-17.7, and ABS Guide for Certification of Cranes.

SCREW PIN CHAIN SHACKLES

G-210 S-210

Screw pin chain shackles meet the performance requirements of Federal Specification RR-C-271D, Type IVB, Grade A, Class 2, except for those provisions required of the contractor. For additional information, see page 391.

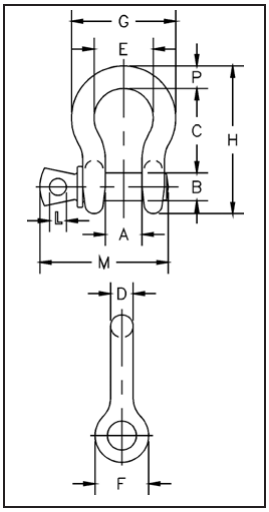

G-209 S-209

Nominal Size (in.)	Working Load Limit (t)*	Stock No. G-209	Stock No. S-209	Weight Each (lbs.)	Dimensions (in.) A	B	C	D	E	F	G	H	L	M	P	Tolerance + / - C	A
3/16	1/3	1018357	-	.06	.38	.25	.88	.19	.60	.56	.98	1.47	.16	1.14	.19	.06	.06
1/4	1/2	1018375	1018384	.10	.47	.31	1.13	.25	.78	.61	1.28	1.84	.19	1.43	.25	.06	.06
5/16	3/4	1018393	1018400	.19	.53	.38	1.22	.31	.84	.75	1.47	2.09	.22	1.71	.31	.06	.06
3/8	1	1018419	1018428	.31	.66	.44	1.44	.38	1.03	.91	1.78	2.49	.25	2.02	.38	.13	.06
7/16	1-1/2	1018437	1018446	.38	.75	.50	1.69	.44	1.16	1.06	2.03	2.91	.31	2.37	.44	.13	.06
1/2	2	1018455	1018464	.72	.81	.63	1.88	.50	1.31	1.19	2.31	3.28	.38	2.69	.50	.13	.06
5/8	3-1/4	1018473	1018482	1.37	1.06	.75	2.38	.63	1.69	1.50	2.94	4.19	.44	3.34	.69	.13	.06
3/4	4-3/4	1018491	1018507	2.35	1.25	.88	2.81	.75	2.00	1.81	3.50	4.97	.50	3.97	.81	.25	.06
7/8	6-1/2	1018516	1018525	3.62	1.44	1.00	3.31	.88	2.28	2.09	4.03	5.83	.50	4.50	.97	.25	.06
1	8-1/2	1018534	1018543	5.03	1.69	1.13	3.75	1.00	2.69	2.38	4.69	6.56	.56	5.13	1.06	.25	.06
1-1/8	9-1/2	1018552	1018561	7.41	1.81	1.25	4.25	1.16	2.91	2.69	5.16	7.47	.63	5.71	1.25	.25	.06
1-1/4	12	1018570	1018589	9.50	2.03	1.38	4.69	1.29	3.25	3.00	5.75	8.25	.69	6.25	1.38	.25	.06
1-3/8	13-1/2	1018598	1018605	13.53	2.25	1.50	5.25	1.42	3.63	3.31	6.38	9.16	.75	6.83	1.50	.25	.13
1-1/2	17	1018614	1018623	17.20	2.38	1.63	5.75	1.54	3.88	3.63	6.88	10.00	.81	7.33	1.62	.25	.13
1-3/4	25	1018632	1018641	27.78	2.88	2.00	7.00	1.84	5.00	4.19	8.86	12.34	1.00	9.06	2.25	.25	.13
2	35	1018650	1018669	45.00	3.25	2.25	7.75	2.08	5.75	4.81	9.97	13.68	1.22	10.35	2.40	.25	.13
2-1/2	55	1018678	1018687	85.75	4.13	2.75	10.50	2.71	7.25	5.69	12.87	17.84	1.38	13.00	3.13	.25	.25

* NOTE: Maximum Proof Load is 2.0 times the Working Load Limit. Minimum Ultimate Strength is 6 times the Working Load Limit. For Working Load Limit reduction due to side loading applications, see page 74.

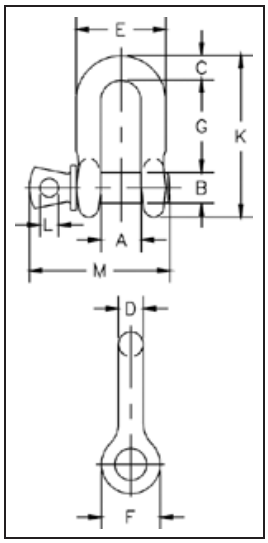

G-210 S-210

Nominal Size (in.)	Working Load Limit (t)*	Stock No. G-210	Stock No. S-210	Weight Each (lbs.)	Dimensions (in.) A	B	C	D	E	F	G	K	L	M	Tolerance +/- G	A
1/4	1/2	1019150	1019169	.11	.47	.31	.25	.25	.97	.62	.97	1.59	.19	1.43	.06	.06
5/16	3/4	1019178	1019187	.17	.53	.38	.31	.31	1.15	.75	1.07	1.91	.22	1.71	.06	.06
3/8	1	1019196	1019203	.28	.66	.44	.38	.38	1.42	.92	1.28	2.31	.25	2.02	.13	.06
7/16	1-1/2	1019212	1019221	.43	.75	.50	.44	.44	1.63	1.06	1.48	2.67	.31	2.37	.13	.06
1/2	2	1019230	1019249	.59	.81	.63	.50	.50	1.81	1.18	1.66	3.03	.38	2.69	.13	.06
5/8	3-1/4	1019258	1019267	1.25	1.06	.75	.63	.63	2.32	1.50	2.04	3.76	.44	3.34	.13	.06
3/4	4-3/4	1019276	1019285	2.63	1.25	.88	.81	.75	2.75	1.81	2.40	4.53	.50	3.97	.25	.06
7/8	6-1/2	1019294	1019301	3.16	1.44	1.00	.97	.88	3.20	2.10	2.86	5.33	.50	4.50	.25	.06
1	8-1/2	1019310	1019329	4.75	1.69	1.13	1.00	1.00	3.69	2.38	3.24	5.94	.56	5.13	.25	.06
1-1/8	9-1/2	1019338	1019347	6.75	1.81	1.25	1.25	1.13	4.07	2.69	3.61	6.78	.63	5.71	.25	.06
1-1/4	12	1019356	1019365	9.06	2.03	1.38	1.38	1.25	4.53	3.00	3.97	7.50	.69	6.25	.25	.13
1-3/8	13-1/2	1019374	1019383	11.63	2.25	1.50	1.50	1.38	5.01	3.31	4.43	8.28	.75	6.83	.25	.13
1-1/2	17	1019392	1019409	15.95	2.38	1.63	1.62	1.50	5.38	3.62	4.84	9.05	.81	7.33	.25	.13
1-3/4	25	1019418	1019427	26.75	2.88	2.00	2.12	1.75	6.38	4.19	5.78	10.97	1.00	9.06	.25	.13
2	35	1019436	1019445	42.31	3.25	2.25	2.36	2.10	7.25	5.00	6.77	12.74	1.13	10.35	.25	.13
2-1/2	55	1019454	1019463	71.75	4.12	2.75	2.63	2.63	9.38	5.68	8.07	14.85	1.38	13.00	.25	.25

* NOTE: Maximum Proof Load is 2.0 times the Working Load Limit. Minimum Ultimate Strength is 6 times the Working Load Limit. For Working Load Limit reduction due to side loading applications, see page 74.

Copyright © 2008 The Crosby Group, Inc.
All Rights Reserved

Crosby Clamp-Co Beam Clamps

BEAM CLAMPS

Crosby Clamp-Co Beam Clamps provide an efficient method for handling wide flange beam sections and plate girders. When lifting, these beam clamps grip the beam at three points, and when properly balanced and safely guided, the beam can be handled even if the clamp is slightly off center lengthwise.

- Capacities: 5 Tons to 35 Tons
- Eliminates the need for slings, chokers, and spreader bars.
- When applied to load, the tongs automatically open and slide under the flange of the beam.
- Center plate and gripping tongs work together - the heavier the beam, the greater the clamping pressure.
- Model "NS" clamps have a recessed base to accept studs welded to the beam surface.
- Individually Proof Tested to 2 times the Working Load Limit with certification.
- Finish - Red Paint
- All sizes are **RFID EQUIPPED**.

NOTE: Control the beam at all times. Beams should be gripped as near the center as possible. Snubbing lines at each end must be used to control excessive twisting or swinging, and to guide the beam to its proper place. Each lifting situation may have a specific demand which should be addressed before lifting.

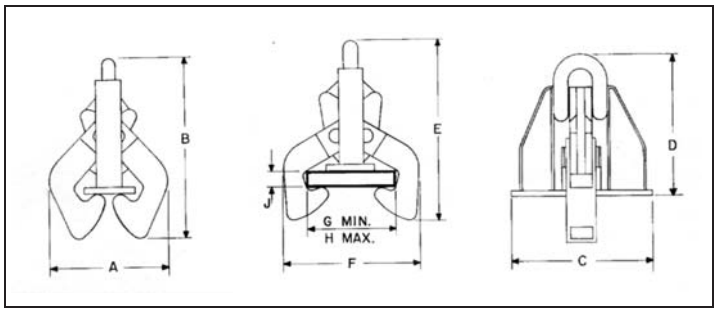

Beam Clamps

Model No.	BCFG Stock No.	Working Load Limit (Tons)*	Flange Grip Range (in.)		Weight Each (lbs.)	Dimensions (in.)								
			Width	Thickness		A	B	C	D	E	F	G	H	J
F-5	2732000	5	4 - 10	.5 - 1	70.0	9.50	26.00	12.00	20.00	25.50	16.00	.75	4.00	1.00
F-15	2732009	15	7 - 17	.5 - 2	153	15.50	34.00	17.00	27.00	34.50	25.00	7.00	17.00	2.00
NS-15	2732018	15	7 - 17	.5 - 2	153	15.50	34.00	17.00	27.00	34.50	25.00	7.00	17.00	2.00
F-25	2732027	25	16 - 24	1 - 3	290	23.00	48.00	22.25	36.00	53.00	37.25	16.00	24.00	3.00
NS-25	2732036	25	16 - 24	1 - 3	290	23.00	48.00	22.25	36.00	53.00	37.25	16.00	24.00	3.00
F-35	2732045	35	16 - 36	1.63 - 4	519	30.00	64.00	27.50	48.00	58.00	53.00	16.00	36.00	4.00
NS-35	2732054	35	16 - 36	1.63 - 4	519	30.00	64.00	27.50	48.00	58.00	53.00	16.00	36.00	4.00

* Maximum Proof Load is 2 times the Working Load Limit.

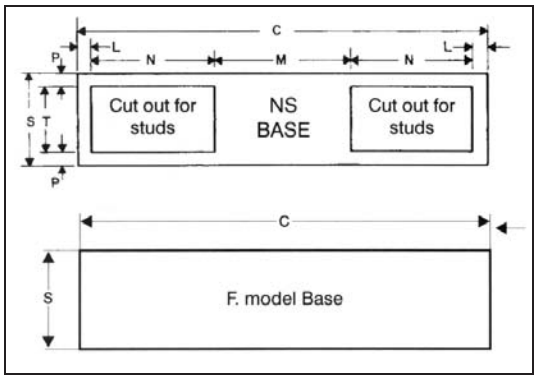

Base Stock No.	Base Dimensions (in.)						
	C	L	M	N	P	S	T
F-5	13.50	-	-	-	-	3.00	-
F-15	17.00	-	-	-	-	4.00	-
NS-15	17.00	.50	6.50	4.50	.75	4.00	2.50
F-25	22.25	-	-	-	-	5.50	-
NS-25	22.25	.75	7.75	6.50	.75	5.50	4.00
F-35	27.50	-	-	-	-	6.00	-
NS-35	27.50	.75	9.00	8.50	.75	6.00	4.50

Copyright © 2008 The Crosby Group, Inc.
All Rights Reserved

Erection Schematics

50K Shore Towers

(8'-0" x 6'-0", 8'-0" x 7'-0" or 8'-0" x 8'-0") consist of two welded frames and two ("X") bracing frames which equal four legs for a maximum load of 200K. Up to four additional legs per tower may be added for a 400K capacity.

50K JACK PLATE DIMENSIONS

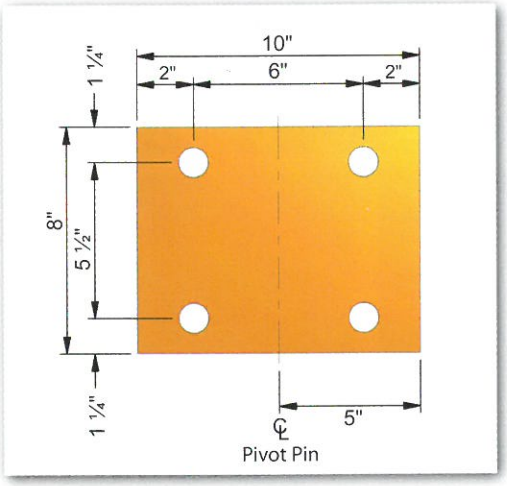

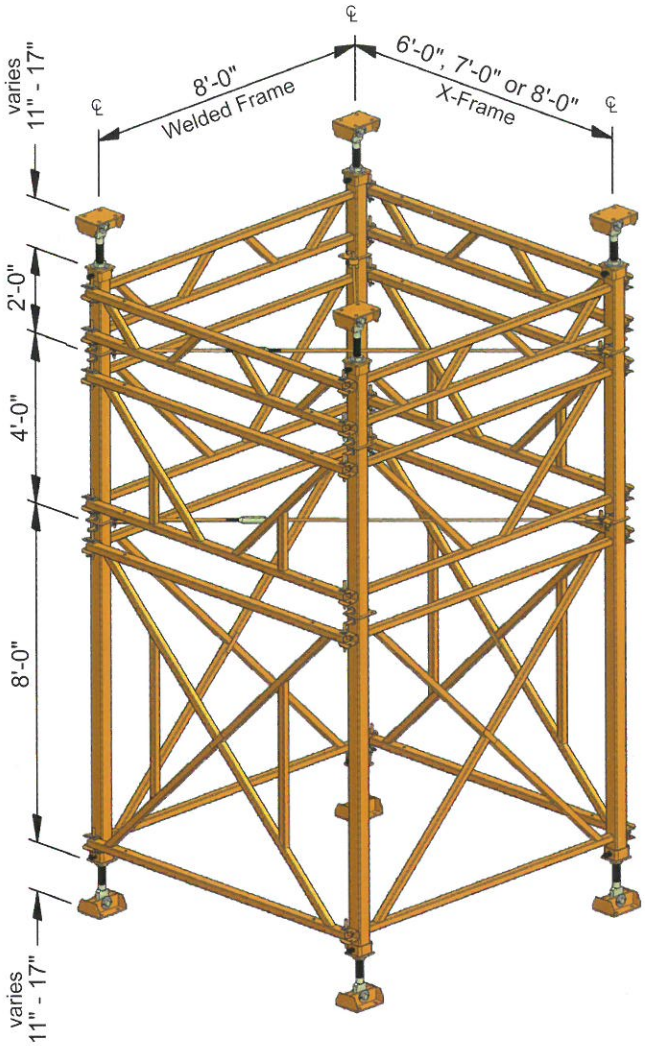
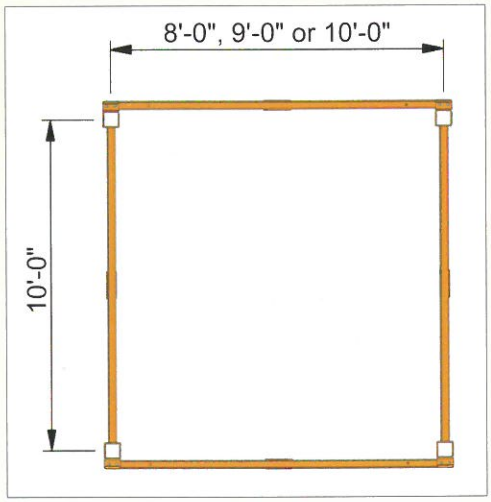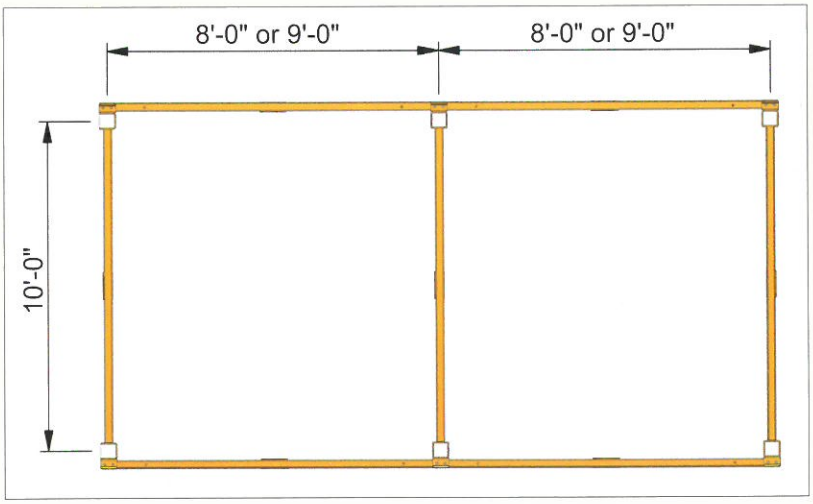
Alternate Tower