KUBRICKY CONSTRUCTION CORP.
269 BALLARD ROAD

WILTON, NY 12831
518 792-5864

KUBRICKY CONSTRUCTION CORP.
A PROUD MEMBER OF THE D.A. COLLINS™ COMPANIES

Rutland City BRF 3000 (2014036)
SUBMITTAL 17.3

Issued 02/06/15

To

Timothy Pockette, PE

Topic	Drilled Shaft Installation Plan - Third Revision
Status	For Approval
Spec section	900.640

From

Harper T Callahan

Signed by _____ Date 2/6/15

Proceed as Indicated _____ Date _____
Owner Authorized Representative

BUFFALO DRILLING COMPANY INC.
10440 MAIN ST.
CLARENCE, NY 14031
PHONE (716)759-7821
FAX (716)759-7823

January 29th, 2015 **Revision 3**

Attn: Volker Burkowski
Kubricky Construction Corp.

Project: Replacement of River Street Bridge
North River Street
Rutland, Vermont

Submittal for Drilled Caisson Construction for the Rutland City Bridge

Attachments:

0a Rutland City Bridge Pictorial Table of Contents - Rev 3
0b Rutland City Bridge Caisson Construction Submittal - Rev 3
Ob-1 Correction List to Notes on Submittal Ob – Add 1-13
Ob-2 Correction List Notes for State of VT Letter Dated 12-9-2014 - Add 1-13
Ob-3 Correction List Notes for State of VT Letter Dated 1-9-2015 - Add 1-13
Ob-4 Correction List Notes for State of VT Letter Dated 1-21-2015 - Add 1-23
0c Methods for Checking Shaft Alignment, Plumbness, and Diameter
0d NYS DOT Construction Monitoring – Section 7 pages 15-18
0e ~ Drawing ~ Temporary + Permanent Casing Graphic - Rev 2
0f ~ Drawing ~ Drill and Pour Staging Locations - Add 12-22 Rev 1
0g ~ Drawing ~ 12.0 Foot Diameter Temporary Casing - Add 12-22 Rev 1
0h ~ Drawing ~ 10.0 Foot Diameter Temporary Casing – Rev 2
0i ~ Drawing ~ 8.0 Foot Diameter Temporary Casing – Rev 2
0i1 ~ Drawing ~ 9.0 Foot Diameter Permanent Casing – Add 1-13
0j ~ Drawing ~ Top View 12.0 Foot Diameter Temporary Casing and Bracing - Add 12-22 Rev 1
0k ~ Drawing ~ Profile View 12.0 Foot Diameter Temporary Casing and Bracing - Add 12-22 Rev 1
1a Jinta SD20E Spec Sheet
1b 0l ICE Model 44 Vibratory Driver~Extractor with 350G Power Pack – Add 12-31
2 MSDS Sheets – Rev 1 (Removed from this submittal)
3 ACI Limits on Free Fall of Concrete
4a GSP5-10-20-206 Submersible Pump
4b GPL-50HX Slurry Pump
4c MudPuppy-255-2sc Spec Sheet - Add 12-22
4d Sand Guzzler Spec Sheet - Add 12-22
4e 21-K Wheeled OpenTop Baker Tank Add 1-23
4f 21-K OpenTop Baker Tank Add 1-23
5 Cretelox Bonding Agent Spec
6a Shore PacR Polymer Slurry Drilling Process and Mixing Guide - Rev 1
6b Cetco Design for Rutland River Bridge Caisson - Rev 1
6c Shore Pac Disposal - Rev 1
6d Mud-Slurry Testing Kit - Add 12-22
6e CETCO Letter of Training and Usage - Add 1-23
7 Jobs, Operators, and Crew - Rev 2
8 Temp Casing Cert + Removal Submittals - Rev 2
9a 4,000 psi Concrete - VT Class SCC Rev 2-6
9b VT Class SCC Mix Backup Documentation for Concrete Components
9c NRMC Self Consolidating Concrete Brochure
9d NRMC Self Consolidating Concrete - Concrete in Practice
9e 42-Z Putzmeister Concrete Boom Truck - Rev 1
9f 5 Inch Diameter Pump Pipe - Clamped & Threaded - Add 1-23
10 GeoVision Down-Hole Camera
12a Buffalo Drilling Concrete Core Retrieval
12b Drill Rig 208
12c Drill Rig 209
12d Drill Rig 213
12e Drill Rig 222

12f NX Core Barrel System
12g Manual Core Machine Stand and M2 Roller Carriage Upgrade
12h Core Catcher System
13a Lifting Plan for Rebar Cage - Add 1-23
13b Winter Concrete Plan - Add 1-23
13c Lighting Plan - Add 1-23

0 Submittal for Rutland City Bridge Caisson Construction Cover-Sheet - Rev 3
0a Rutland City Bridge Pictorial Table of Contents - Rev 3
0b Rutland City Bridge Caisson Construction Submittal - Rev 3
0b-1 Correction List to Notes on Submittal Ob - Add 1-13
0b-2 Correction List Notes for State of VT Letter Dated 12-11-2014 - Add 1-13
0b-3 Correction List Notes for State of VT Letter Dated 1-9-2015 - Add 1-13
0b-4 Correction List Notes for State of VT Letter Dated 1-21-2015 - Add 1-26
0d Methods for Checking Shaft Alignment, Plumbness, and Diameter
0d NYS DOT Construction Monitoring - Section 7 pages 15-18
0e Temporary + Permanent Casing Graphic - Rev 2
0f Drill and Pour Staging Locations - Add 12-22
0g 12.0 Foot Diameter Temporary Casing - Add 12-22
0h 10.0 Foot Diameter Temporary Casing - Revised 1-13
0i 8.0 Foot Diameter Temporary Casing - Revised 1-13
0i1 9.0 Foot Diameter Permanent Casing - Added 1-13
0j Top View 12.0 Foot Diameter Temporary Casing and Bracing - Add 12-22
0k Profile View 12.0 Foot Diameter Temporary Casing and Bracing - Add 12-22
1a Jinta SD20E Spec Sheet
1b ICE Model 44 Vibratory Driver~Extractor with 350G Power Pack - Add 12-21
3 ACI Limits on Free Fall of Concrete
4a GSP5-10-20-206 Submersible Pump
4b GPL-50HX Slurry Pump
4c MudPuppy-255-2sc Spec Sheet - Add 12-22
4d Sand Guzzler Spec Sheet - Add 12-22
4e 21-K Wheeled OpenTop Baker Tank Add 1-23
4f 21-K OpenTop Baker Tank Add 1-23
5 Cretelox Bonding Agent Spec
6a Shore PacR Polymer Slurry Drilling Process and Mixing Guide - Rev 1
6b Cetco Design for Rutland River Bridge Caisson - Rev 1
6c Shore Pac Disposal - Rev 1
6d Mud-Slurry Testing Kit - Add 12-22
6e CETCO Letter of Training and Usage - Add 1-13
7 Jobs, Operators, and Crew - Rev 2
8 Temp Casing Cert + Removal Submittals - Rev 2
9a 4,000 psi Concrete - VT Class SCC
9b VT Class SCC Mix Backup Documentation for Concrete Components
9c NRMC Self Consolidating Concrete Brochure
9d NRMC Self Consolidating Concrete - Concrete in Practice
9e 42-Z Putzmeister Concrete Boom Truck - Rev 1
9f 5 Inch Diameter Pump Pipe – Clamped & Threaded
10 GeoVision Down-Hole Camera
12a Buffalo Drilling Concrete Core Retrieval
12b Drill Rig 208
12c Drill Rig 209
12d Drill Rig 213
12e Drill Rig 222
12f NX Core Barrel System
12f NX Core Barrel System
12g Manual Core Machine Stand and M2 Roller Carriage Upgrade
12h Core Catcher System

Buffalo Drilling Company, Inc. (BDC) Caisson Construction Submittal for the Rutland City Bridge

Summary: It is the intention of BDC to advance telescoping temporary (144.0, 120.0, and 96 inch diameter) casing down to and into the weathered bedrock like soils with the 96 inch casing bottoming out at approximate elevation 480.32 feet with the top of this casing at or above the defined top of grade elevation 526.32. All references to casing diameters, lengths, top, and tip elevations are depicted on **Attachment 0e Temporary + Permanent Casing Graphic Rev. 2**. The remaining 48.02 feet will be advanced in the open with the distinct possibility of using either water or Cetco polymer slurry to maintain the integrity of the shaft. Before the concrete pour begins, a permanent 108 inch diameter permanent casing will be centered and slid over the 96 inch temporary casing with the top of the 108 inch permanent casing set at or just above the ToC elevation of 521.32 feet. The bottom of the 108 inch casing will range 15 to 20 feet below the ToC. After the casing is set in place it will be temporarily welded to the 10 and 12 foot diameter temporary casings to prevent movement while extracting the 96 inch temporary casing during the pour. After the caisson shaft has been inspected and accepted, BDC will assist *Kubricky Construction Corp.* (*KCC*) with the setting of *KCC's* rebar cage, and will begin to tremie pour *BDC's* 4,000 psi Self-Consolidating Concrete supplied by *Carrara Concrete (CC)* **Attachments 9a,b,c,d** using a concrete boom truck with five inch ID line supplied by *Precision Concrete Pumping Inc.(PCP)* **Attachments 9e,f**. The pour will continue until the head of concrete is a minimum of five feet into the permanent 108 inch casing so the tremie pipe can be temporarily disconnected, the 96 inch temporary casing can be totally withdrawn leaving a head of concrete in the permanent 108 inch casing, the tremie pipe can be reconnected, and the pour can continue. The concrete will be poured until the concrete has passed the top of concrete elevation (521.32) by two to three feet and the muck and lattice can then be cleaned off using using automatic muck buckets and other tooling. A period of time will pass, eight to twelve hours, and the sand, the 10, and 12 foot diameter temporary casings can be removed while backfilling with materials of Kubricky' choice. The means and methods are detailed below.

A) Progression through Obstructions/ Rock

Buffalo Drilling Company will employ, as needed, rock augers, core barrels, star busters, and temporary casing with or without rock teeth to remove any unanticipated obstructions.

B) Keeping the Hole Open

BDC, working with *KCC* and using their 110 ton crane, will first assist with the install of a 144 inch diameter x 10.0 foot long temporary casings which will be drilled in place to approximately 2.0 feet below the bottom of the creek bottom or elevation 516.32. After the casing has been set, it will be stabilized with framing, stone backfill, and a deck constructed with the assistance of KCC to allow 360 degree access to the caisson. *BDC*, working with *KCC* surveyors, will mark out offsets dimensions on the top of the 144 inch temporary casing and at hubs for use in aligning the 120 and 96 inch temporary casing and 108 inch diameter permanent casing during their installation processes.

BDC will then proceed to advance a 120 inch diameter temporary casing to an approximate tip elevation between 508.32 and 511.32 feet. This will be accomplished with the use of augers and core barrels to drill both with and in front of the tip of the temporary casing and drag the casing along with the drill tooling. This method eliminates any void situation between the outside of the casing and the soils. After the 120 inch diameter casing has been set in place, BDC, with the assistance of KCC's 110 ton crane, will use a ICE Mode 44 Vibratory Hammer

to install the 96 inch diameter temporary casing to approximate elevation of 480.32 feet. This 96 inch diameter temporary casing could be drilled or vibrated deeper based on the soil conditions encountered. If the 96 inch casing is to be drilled deeper, the same procedure would be followed as described for the setting of the 144 and 120 inch temporary casings. If required, additional 96 inch temporary casing can be welded on to the already installed casing. After the shaft has been drilled to final depth and before the pour begins, BDC will install a length of 108 inch permanent casing that will extend to a minimum top elevation equal to the top of the caisson (elevation 521.32) to depth equal to or greater then the bottom of the 120 inch diameter temporary casing (elevation 508.32 to 511.32). In attachment **Attachment 0e Temporary + Permanent Casing Graphic Rev. 2** we have shown the permanent 108 inch casing extending five feet below the bottom of the 120 inch temporary casing (elevation 506.32). The final length of the 108 inch permanent casing will be between 10 and 20 feet dependent on the soil conditions encountered.

At this point, the shaft should be able to be advanced in the open into the highly weathered bedrock like soils. If the shaft in the weathered bedrock like soils does not stay open, Buffalo Drilling Company is prepared to use water or Cetco drill slurry (**Attachments 6a, 6b, 6c, and 6d**) to maintain the integrity of the shaft to the caisson tip elevation of 432.30 feet.

In some instances, slurry drilling techniques are employed with the sole purpose to maintain hole stability in the overburden long enough to advance a temporary or permanent casing into place. *BDC* does not anticipate employing this method for the setting of the only 108 inch diameter permanent casing which could cause the creation of voids between the casing and the soils. The permanent casing that *BDC* is setting will be vibrator driven and/or spun in place with the drill rig which which will eliminate the creation of said voids in the natural soils encountered.

C) Sequencing of Shaft Construction

KCC will be responsible to locate the center of shaft and specific elevations using registered land surveyors and/or engineers, establish offsets, and monitor locations during construction using tape measures, total stations, and or laser leveling equipment as needed.

The there will be only one shaft to be drilled which will be the 96 inch diameter shaft which is located on the edge of Otter Creek just south of the northern branch of East Creek. Upon completion of the specified drilled shaft, BDC will employ the Mini-SID camera system (Attachments 13a and 13b) to view the bottom of the shaft and measure the depth of sediment remaining. After concrete is poured and set others will perform the required Sonic Log Testing.

The determination of the Bottom of the Caisson (BoC) or the bottom of the shaft will be established by the engineering geologist and would most likely employ a combination of methods. These methods could include, but not be limited to, the measuring the depth of the shaft as well as the examination of the cuttings removed from the shaft. Additional methods can be obtained from the individual who is assigned with the responsibility to inspect the shaft, such as the engineering geologist.

Methodology for installation of shaft could vary based on the length of the overburden to be drilled and sleeved, the consistency of the soils, the use of temporary or permanent casing, and the interaction with boulders or obstructions. Shallow lengths of casing, i.e. less then 15 feet,

can be installed by drilling a shallow excavation, two to three feet deep, somewhat smaller then diameter of the casing to be set. At this point an auger can be run down to loosen the soils allowing for the casing to be advanced through crowding and spinning it into the soils with the drill rig. The soils below the shallow excavation would not be removed unless they presented a stand up period that would allow their removal and the installation of a temporary casing without the collapse of the shaft. If the soils will not stand up, the casing would be spun into ground using the drill rig while at the same time using an auger or core barrel to cut the soils as the casing is dragged along with the cutting tool. Soils would then be removed to the bottom of the casing and could be advanced further by incrementally loosening the soils in front of the casing while continuing to spin the casing down until the toe of the casing has reached the desired elevation. This incremental advancement of the casing will avoid the collapsing of the shaft soils while at the same time install the casing without creating any voids between the permanent casing and the surrounding soils. With all sections of the temporary and permanent casing set and soils removed, methods for excavating through the 96 inch diameter highly weathered rock would employ the use of rock augers, core barrels, busters, and carbide tipped rock teeth. Alignment of casing, shafts, and rock sockets will be maintained using offsets, gravity, rig orientation, leveling of rig/Kelly bar, lasers, and total stations.

The construction of this shaft will use 144 and 120 inch diameter temporary casing of 10 foot lengths, temporary 96 inch casing 45 to 60 feet long, and permanent 108 inch casing 15 to 20 feet long (**0e Temporary + Permanent Casing Graphic Rev. 2**) and will require four sleeves. BDC anticipates a quadurple sleeved shaft using one section of permanent casing and three sections of temporary.

BDC will also be prepared to use, if required, slurry drilling methods employing Cetco polymer slurry products (**Attachments 6a, 6b, 6c, and 6d**). One of the purposes for the use of slurry for this would be to maintain shaft stability to allow for the insertion of temporary or permanent casing. If the shaft, which has casing set into the weathered bedrock like soils, stays open during the uncased drilling process, the slurry, if used, would be pumped back to the holding tank and either reused or disposed of by *KCC*.

The other purpose, would be to maintain hole stability and integrity without the use of casing as the shaft is advanced beyond the tip of the permanent casing to the BoC or Tip Elevation of the caisson. This is where BDC anticipates using either the head pressure of keeping the shaft full of water to maintain uncased shaft integrity or introducing Cetco 'ShorePac' Drilling Slurry to enhance the pressure and viscosity even further. Additional Cetco products could and would be employed for de-sanding the slurry, increasing the viscosity to deal with adverse sand or gravel situations, or to breakdown the slurry entirely.

Upon completion of shaft/rock socket construction, viewing with *BDC's* GeoVision Downhole Camera (**Attachment 10 GeoVision Down-Hole Camera**), inspection by the engineering geologist, *KCC* would deliver to the hole their cage cut to the required length. Before setting, *BDC* will attach to the rebar cage *KCC's* booties and centralizers, the cage will be lifted using the winch line on the a crane supplied by KCC and be placed in the shaft per **Attachment 13a – Lifting Plan for Rebar Cage**. Concrete will be placed using freefall, tremie, concrete boom pump, or hopper with elephant trunk all dependent on the water conditions encountered. It is highly likely that we will be employing the boom pump truck on this project. The above pour techniques are discussed further in Item J.

D) Type of Equipment

The drill rig used will be Jinta SD-20E (**Attachment 1a**). Anticipated drill tooling is listed at the conclusion of this submittal under item Q.

The vibratory hammer will be an ICE Model 44 Driver/Excavator with Model 350G Power Unit. (**1b ICE Model 44 Vibratory Driver~Extractor with 350G Power Pack – Add 12-31**)

BDC will supply and operate a down-hole camera system (**Attachment 10 GeoVision Down-Hole Camera**), to allow for black and white viewing of the bottom and sides of the shaft.

E) Cleaning Shafts and Soil Disposal

Buffalo Drilling Company will machine clean shaft bottoms using augers, muck buckets, and/or pac man as needed. Soil and slurry disposal will be handled by *KCC*.

F) Documentation – Contractor, Driller, Foreman

BDC will be employing Don Morris who will act as lead driller and foremen while the BDC crew is on site.(**Attachment # 7 Jobs, Operators, and Crew**) The operator could change based on his availability at the time construction begins.

G) Shaft Excavation Methods and Final Shaft Dimensions

Buffalo Drilling Company proposes to use temporary and permanent sleeves to construct the shaft, with three temporary and one permanent casings, drilled into the weathered bedrock like soils. At this point, the shaft will be further advanced without the use of a casing. The final pier shaft dimensions will be dependent on the soil conditions but BDC is planning on using 144 and 120 inch diameter upper temporary casing for the overburden and will also be using 96 inch diameter temporary casing. The upper 144 and 120 inch casing will be spun and drilled in place using the drill rig, core barrels, and rock augers. The 96 inch temporary casing will be set initially, and possibly completely, using an ICE Vibratory Driverr. Using core barrels and rock augers to advance the casing further the driver allows would follow the same procedures as outlined for the drilled installation of the larger diameter casing. BDC will set the permanent 108” casing by either spinning it into place with the drill rig or vibrating it in place using the ICE Vibrator. The previously defined temporary casing dimensions could vary by up to six inches in diameter depending on the soil and rock conditions encountered and the number of casings employed.

H) The use of slurry is not presently anticipated but if and when it is employed it will be to maintain the shaft integrity below the tip of lowest temporary casing around elevation 480.32 ~ initially, there are NO plans to use slurry to keep the shaft open during the installation of the three sections of temporary casing. BDC will be using the CETCO line of polymer products (**Attachments 6a, 6b, 6c, and 6d**) as needed for the setting of temporary casing, if required, or for the maintenance of the shaft integrity below the temporary casing.

I) Reinforcement Placement

Upon completion of shaft construction, *KCC* will move the cage to the shaft. Centralizers and Bar Boots, provided by *KCC*, will be attached to the cage and the cage will be placed in the shaft using a crane, or other lifting equipment supplied by KCC. (Boots will be attached to every vertical while centralizers, horizontally spaced at a maximum of 9.8 feet intervals (3 meters) and placed in symmetric groups of six around the cage clipped to the horizontal rebar hoops. (minimum spacing of 4')

J) Concrete Placement

Concrete, VT Class SCC, provided by BDC and supplied by *CC* (**Attachments 9a, 9b, 9c, and 9d**), will be placed using a *PCP* concrete boom truck, **Attachment 9e,** to tremie pour the concrete through a five inch pump pipe **Attachment 9f**. The pour will commence within 8 hrs of the final cleaning of the shaft. As the concrete rises in to the 96" diameter temporary casing and five feet or more into the 108 inch permanent casing the pump will be temporarily disconnected allowing for the pulling of the permanent 96 inch temporary casing. The tremie pipe will be reconnected and the pour will continue allowing the concrete to rise a minimum of two to three feet past the top of the caisson elevation so that the lattice and muck at the top of the concrete can be removed using automatic muck buckets and other tooling. The clean concrete will be removed back to the top of concrete elevation and the rebar above that can be brush cleaned at a later point in time. This method was chosen because waste Concrete is considered the top 24" of initial concrete placed

If water is encountered a submersible pump would be lowered to the bottom of the shaft to remove the water to an acceptable level of 2 inches (50 mm) or less. If water infiltration is greater then the capacity of the pump to remove it the pump would be removed and the water would be allowed to fill the hole and rise to a static level. Procedures for either pumping or tremie pour would then be employed to fill the excavation.

J-1) Pumping concrete employs either a trailer mounted or truck mounted (boom truck) mechanical pumping system. Methods require the lowering to the bottom of the shaft a four or five inch diameter steel pipe. Concrete is then pumped into the excavation. Care must be taken when raising the steel pipe to be sure that the bottom of the steel pipe remains embedded a minimum of five feet into the concrete thus avoiding intermixing the pumped concrete with the water or slurry in the shaft. To prevent the tremie pipe from pushing it's way out of the concrete during pumping, the operator on the concrete pump will maintain pressure on the 4 to 5 inch tremie pipe submerged in the concrete. After the concrete has risen to the level where a five foot head of concrete is apparent in the temporary sleeve the pumping pipe can be removed, pumped off, and any contaminants can be mucked of the top of the concrete and pouring can continue using pump or tremie pipe.

J-2) Tremie pouring follows the same procedures as defined when pumping concrete. A tremie pipe, minimum 12 inch diameter steel or plastic pipe, replaces the 4 to 5 inch diameter pipe used when pumping concrete (J-2). Procedures of plugging, lowering, rising of the tremie relative to embedment and head in the temporary sleeve are the same as outlined above. A hopper is usually used on the top of the tremie pipe to avoid spillage.

For removal of temporary casing see the Attachment number 8.

Because *CC* does not have heated aggregate at it's Rutland plant from where the concrete will be mixed with hot water, as needed, the weather will have to be watched carefully so that a moderate temperature of 20 degrees or higher to satisfy concrete winter conditions. At the completion of the concrete pour the top of the shaft & the extended rebar will be capped and wrapped with insulated blankets supplied by KCC per **Attachment 13b - Winter Concrete Plan.**

.

K) Concrete Mix and Modified Tremie Mix

The *CC* will be providing the concrete for the caisson and has provided BDC with VT Class SCC. The specified mix (**Attachment 9b VT Class SCC Concrete Submittal**) which will be poured using a *PCP* boom truck, **Attachment 9e** and 5 inch diameter pump pipe, **Attachment 9f** to temie pour the concrete.

L) Emergency Joint Procedure

Rough up the top of the pour and insert 4 No. 5 dowels 6 foot long, 3 feet into poured concrete. When pour is continued, clean the top of the pier and cover with bonding agent according to the printed direction of bonding agent used. If the joint is to far down the shaft to reach, BDC will employ longer dowels that will extend up the shaft to allow for manual installation. The imbedded length (bottom 3 feet) would be brushed with bonding agent before inserting in the poured concrete. These dowels would be tied off using tie wire to position them properly before concrete pouring resumed.

O) Bonding Agent

ChemMasters bonding agent Cretelox, or a compound approved by the *Vermont Agency of Transportation* will be used as needed per the directions on the attached product data sheet. In order to maintain the moisture of the bonding agent it would only be applied to the rebar and the concrete when we knew that the delivery of the concrete would fall within the required time frame. A brush / roller extension would used for areas that are out of reach from the top of the shaft. See attachment number 5.

P) Equipment for Inspections

BDC will be supplying a down hole camera for viewing the bottom of the completed shaft see **Attachment 10 GeoVision Down-Hole Camera** – this is also addressed in Items C and D above.

P-1) Effects of the Reduction of Side Friction Due to the use of 108 Inch Permanent

Since BDC has revised it's procedures to only use permanent casing in the top 15 to 20 feet of the caisson, we feel any reduction in the side friction will be negligible due to three factors.

1) The top 7 to 10 feet of a caisson is usually disregarded when calculating the effects of so side friction on the shaft
2) The next 10 to 12 feet in the existing soils did not have much resistance capacity allowing the remaining 72 to 75 feet of un-sleeved shaft to more then carry the required loading.

3) There will also be some side fiction in the permanently cased section that falls outside of the top 7 to 10 throw away zone.

Q) Equipment and Tooling List

Drill Rig and Other Equipment

2009 Jinta SD-20E Track Mounted Drill Rig
ICE Mode 44 Hydraulic Vibratory Driver
Model 3500G Power Unit
12.0 Foot Caisson Beam Clamp
20k Mud Tanks Supplied By Baker Tank
MudPuppy-255-2sc
Sand Guzzler
GPL-50HX Slurry Pump

Drill Tools	Diameter
Rock Auger	48”, 60”, 72”, 96”, 108”, 120” & 144”
Core Barrels	48”, 60”, 72”, 96”, 108”, & 120”
Muck Bucket	60” & 90”
Star Buster	
Casing	144”, 120”, 108”, & 96” (Varying Lengths)

R) **Attachments:**

0a Rutland City Bridge Pictorial Table of Contents - Rev 3
0b Rutland City Bridge Caisson Construction Submittal - Rev 3
Ob-1 Correction List to Notes on Submittal Ob – Add 1-13
Ob-2 Correction List Notes for State of VT Letter Dated 12-9-2014 - Add 1-13
Ob-3 Correction List Notes for State of VT Letter Dated 1-9-2015 - Add 1-13
Ob-4 Correction List Notes for State of VT Letter Dated 1-21-2015 - Add 1-23
0c Methods for Checking Shaft Alignment, Plumbness, and Diameter
0d NYS DOT Construction Monitoring – Section 7 pages 15-18
0e ~ Drawing ~ Temporary + Permanent Casing Graphic - Rev 2
0f ~ Drawing ~ Drill and Pour Staging Locations - Add 12-22 Rev 1
0g ~ Drawing ~ 12.0 Foot Diameter Temporary Casing - Add 12-22 Rev 1
0h ~ Drawing ~ 10.0 Foot Diameter Temporary Casing – Rev 2
0i ~ Drawing ~ 8.0 Foot Diameter Temporary Casing – Rev 2
0i1 ~ Drawing ~ 9.0 Foot Diameter Permanent Casing – Add 1-13
0j ~ Drawing ~ Top View 12.0 Foot Diameter Temporary Casing and Bracing - Add 12-22 Rev 1
0k ~ Drawing ~ Profile View 12.0 Foot Diameter Temporary Casing and Bracing - Add 12-22 Rev 1
1a Jinta SD20E Spec Sheet
1b 0l ICE Model 44 Vibratory Driver~Extractor with 350G Power Pack – Add 12-31
2 MSDS Sheets – Rev 1 (Removed from this submittal)
3 ACI Limits on Free Fall of Concrete
4a GSP5-10-20-206 Submersible Pump
4b GPL-50HX Slurry Pump
4c MudPuppy-255-2sc Spec Sheet - Add 12-22
4d Sand Guzzler Spec Sheet - Add 12-22
4e 21-K Wheeled OpenTop Baker Tank Add 1-23
4f 21-K OpenTop Baker Tank Add 1-23
5 Cretelox Bonding Agent Spec

6a Shore PacR Polymer Slurry Drilling Process and Mixing Guide - Rev 1
6b Cetco Design for Rutland River Bridge Caisson - Rev 1
6c Shore Pac Disposal - Rev 1
6d Mud-Slurry Testing Kit - Add 12-22
6e CETCO Letter of Training and Usage - Add 1-23
7 Jobs, Operators, and Crew - Rev 2
8 Temp Casing Cert + Removal Submittals - Rev 2
9a 4,000 psi Concrete - VT Class SCC
9b VT Class SCC Mix Backup Documentation for Concrete Components
9c NRMC Self Consolidating Concrete Brochure
9d NRMC Self Consolidating Concrete - Concrete in Practice
9e 42-Z Putzmeister Concrete Boom Truck - Rev 1
9f 5 Inch Diameter Pump Pipe - Clamped & Threaded - Add 1-23
10 GeoVision Down-Hole Camera
12a Buffalo Drilling Concrete Core Retrieval
12b Drill Rig 208
12c Drill Rig 209
12d Drill Rig 213
12e Drill Rig 222
12f NX Core Barrel System
12g Manual Core Machine Stand and M2 Roller Carriage Upgrade
12h Core Catcher System
13a Lifting Plan for Rebar Cage - Add 1-23
13b Winter Concrete Plan - Add 1-23
13c Lighting Plan - Add 1-23

BUFFALO DRILLING COMPANY
INC.
10440 MAIN ST.
CLARENCE, NY 14031
PHONE (716)759-7821
FAX (716)759-7823

December 22th, 2014

Attn: Volker Burkowski
Kubricky Construction Corp.

Project: Replacement of River Street Bridge
North River Street
Rutland, Vermont

Addressing Direct Comments ON
0b Rutland City Bridge - Caisson Construction Submittal

Summary

1) ~~**Was 120" analyzed?** – No, BDC did no separate analysis beyond the assumption that the ten foot diameter sleeve and concrete was only adding increased, differing and improved soil structure for a 15 foot zone around the rebar cage. -~~ **No Longer Applies**
2) **Top of Bedrock -** the owner of BDC, a professional geotechnical engineer, reads the soil structure starting about 42 feet below grade as a weathered bedrock type soils with competent bedrock found at the 120 foot depth noted in B-201. - "like soils" added after weathered bedrock.

B) Keeping the Hole Open

1) ~~**Sealing 10 ft. casing around 8 ft** – the 2 to 3 foot deep zone around the lower 8'-10' pipe intersection will be filled as the concrete is poured and displaces any trapped slurry. -~~
- **No Longer Applies**
2) **Slurry Manufacturer must –** BDC is not 100% on this comment but - added the name and phone number of the Cetco representative and BDC has scheduled them for a slurry start up site appearance if and when slurry is to be used
3) **Cetco and BDC trained personal** – see item 2 above for Cetco rep and BDC trained personal have their ADSC and Cetco training notes" added to Item "7 Jobs, Operators, and Crew"

C) Sequencing of Shaft Construction

1) **Sonic Log Testing to be Performed by the Engineer** – All references to Sonic Log Testing by Barron & Associates, P.C. have been removed in favor of the engineer.
2) **Concrete Will be Placed using Freefall –** changed from "freefall" to tremie pour techniques

D) Sequencing of Shaft Construction

1) **This is to be performed by the engineer** – see C-1 above

J) Concrete Placement

1) **Specifications Require Placement by Tremie** – see C-2 above
2) **"Three to Five" under J-1**– Changed to "minimum five"
3) **"10 to 12" under J-2**– Changed to "minimum 12

K) Concrete Mix and Modified Tremie Mix

1) Mix #??? – Deleted "Mix #???" because there is no Mix # for this Vermont Specified Design at Carrara Concrete.

Addressing Direct Comment ON
0b Rutland City Bridge - Caisson Construction Submittal

L) How will this Work? Note on drawing 0e Temporary & Permanent Casing Graphic

1) **Added Note 1** –

ANSWER:

1* this pipe is proposed to be 10' in diameter to accommodate the triple sleeve that will occur with the top and bottom 8' diameter permanent casings - We have also specced 9' diameter permanent casing, though a bit tight for overlapping pipe, it should work.

M) The Sahft is 96" Diameter how will smaller diameter casing be beneficial?

2) **Corrected typos** – changed casing diameters to proper dimensions, revised client name and company, and corrected job site location. Also added spec on permanent casing.

Thanks,
Don

Donald E. Bortle Jr.
Buffalo Drilling Company, Inc.

Specialized Drilling & Engineering
Making Your Job, Our Job

10440 Main Street
Clarence, New York 14031

BUFFALO DRILLING COMPANY
INC.
10440 MAIN ST.
CLARENCE, NY 14031
PHONE (716)759-7821
FAX (716)759-7823

December 22nd, 2014

Attn: Volker Burkowski
Kubricky Construction Corp.

Project: Replacement of River Street Bridge
North River Street
Rutland, Vermont

Addressing Direct Comments ON Rutland City BRF 3000 (16) Drilled Shaft Submittal

77. (a) Submittals

a. A list, description, and capacities of proposed equipment and procedures for drilled shaft installation, **included in original submittal with narrative beginning on page one of the 0b Rutland City Bridge Caisson Construction Submittal – Rev 1 beginning with the summary and concluding with lists of equipment at the end of said 0b submittal narrative while drill rig capacities are noted in the attached 1a Jinta SD20E Spec Sheet.**

b. including drawings showing consecutive steps of drilled shaft installation and drawings with measurements showing that the proposed equipment can perform the specified work. **See added Drawings 0g, 0h, and 0i. Drawing 0g details the installation of the 12' foot temporary casing with marks noted for clearance distances from drill rig tracks to the Kelly Bar centerline for drilling at grade elevations at and 5 feet above grade. The same distances are noted for the 9 or 10 foot permanent casing in Drawing 0h and Drawing 0i depicting the 8 foot permanent casing.**

c. Included in the drawings shall be sketches that show the areas that are planned to be used for staging, **see newly attached Drawing 0f Drill and Pour Staging Locations which places general locations for the placement of tanks, crane, pump, and tooling. All these prospective locations will most likely be adjusted and modified by field personnel.**

d. layout drawings showing the proposed sequence of drilled shaft installation, and **Only one shaft to sequence**

e. detailed drawings of all over-water equipment for drilled shaft installation. **No over water equipment involved, all equipment is land based and will be drilling on the edge of the creek with a stone buildup around the temporary 12 foot diameter casing for 360 degree access around the shaft.**

f. The information shall describe the type of equipment to be used, including drill rig, cranes, drilling tools, final cleaning equipment, de-sanding equipment, slurry pumps, bailing buckets, sampling equipment, tremies or concrete pumps, and casing, including casing dimensions, material and splice details, etc. **These items are all noted in the original and in revision 1 of 0b Rutland City Bridge Caisson Construction Submittal along with Attachments 1a, 4a, b, cc & d, 6d, 8, 9e, 10, and 12 b through h.**

g. As appropriate, the narrative shall describe equipment suitability to the anticipated site and subsurface conditions. The narrative shall include a project history of the drilling equipment on shafts of equal or greater size in similar subsurface conditions. **These items are noted in the project history in Attachment 7. These Items can also be discussed in the predrilling conference.**

h. Provide a detailed description of procedures for temporary and permanent casing installation and removal as applicable. **See narrative B Keeping the Hole Open in 0b Rutland City Bridge Caisson Construction Submittal for casing installation and see Attachment 8 for Temporary Casing Removal.**

(5) Methods of removal and disposal of contaminated concrete. **Contaminated concrete will be removed using an muck bucket and disposal will be by *KCC.***

(7) a. Details of concrete batching and/or delivery to the site, **Carrara Concrete will be delivering to the site in their VTDOT approved trucks, the submitted VT Class SCC concrete mix which will be batching from their VTDOT approved plant which is 3.3 to 5 miles and about 10 minutes from the Rutland site.**

b. how concrete acceptance samples will be collected**,** – **to be answered by the testing agency for the GC/State**

c. proposed location for concrete acceptance testing, and **– at rear of pump truck / chute on concrete truck.**

d. concrete placement including proposed operational procedures for concrete pump or tremie. Include **Carrara Concrete will be supplying the concrete pump, as noted in the submittal, and the concrete will be placed in the disbursement hopper of that pump and then pumped to the bottom of the shaft via a 4 or 5 inch diameter tremie pipe.**

e. details of initial placement, **as stated in the original submittal, a 4 or 5 inch diameter tremie pipe, through the use of the crane or drill rig winch line, will be lowered to the bottom of the shaft and concrete will be pumped through that pipe.**

f. raising the tremie pipe(s)during placement, and **as stated in the original submittal, the tremie pipe will maintain a minimum 5 feet of concrete cover as it is raised up with either the crane or drill rig winch line.**

g. overfilling of the shaft concrete, the **the concrete will be over poured at the top of the 120 or 108 " diameter permanent casing to allow for cleaning of the top of the concrete before the placement of the 96" diameter permanent culvert casing.**

h. method to accurately monitor the volume of concrete being placed at all times during the pump/pour– **Batch tickets delivered to the site will be collected and added to the previously collected tickets and a running total of concrete will be maintained by BDC ground personal as well as the pump operator <u>who has a volume counter built into the pump itself</u>.**

i. provisions to prepare the completed shaft top at its final shaft top elevation. **– Permanent 108" diameter will be driven as close to top of caisson elevation, 521.23, as possible. Any excess casing will be cut back to the 521.23 elevation.**

j. Spec sheet on the Concrete Pump to be used **– Already supplied by Carrara Concrete and was and is included as Item 9e in previous and present revised submittal.**

(9) a. The name and current phone number of the slurry manufacturer's technical representative assigned to the project. **Darlene Torkarsky 847.345.3271**

b. The name(s) of the Contractor's personnel assigned to the project trained by the slurry manufacturer's technical representative in the proper use of the slurry. **Don Morris 2010 ADSC Slurry School – Worked with Cetco Products for 15 Years – Mark Bruning**

c. The submittal shall include a signed training certification letter from the slurry manufacturer for each individual, including the date of training. **2010 ADSC Slurry School – Worked with Cetco Products for 15 Years**

(10) a. Detailed procedures for mixing, using, maintaining, and disposing of the slurry shall be provided. **See submittal Attachments items 6a, 6b, and 6c.**

b. A detailed mix design (including all additives and their specific purpose in the slurry mix), and **See submittal Attachments 6a and 6b**

c. a discussion of its suitability to the anticipated subsurface geotechnical conditions, shall also be provided for the proposed slurry. **Attachment 6b**

(11) a. The submittal shall include a detailed plan for quality control of the selected slurry, including **Cetco has outlined a slurry plan in Attachment 6b with further quality control discussions in Attachment 6a.**

b. tests to be performed, **Attachment 6d details the Slurry testing kit which allows for testing of water Ph, Sand Content, Marsh Funnel Viscosity, and Mud Balance.**

c. test methods to be used, and **Test methods are outlined in Attachment 6a starting at the bottom of page 3**

d. minimum and/or maximum property requirements which must be met to ensure that the slurry functions as intended, considering the anticipated subsurface conditions and shaft construction methods, in accordance with the slurry manufacturer's recommendations and these Specifications. (Slurry testing schedule i.e. 4 sets of tests in first 8 hours, 1 set every 4 hours afterward) **BDC plans on following the outline provided by Cetco but adjuncting it with the engineer's recommendation of 4 test in the first 8 hours and 1 every 4 hours thereafter.**

(12) If slurry is to be used, an alternate procedure to be used which will secure the shaft in the event of slurry loss or loss of slurry stabilization properties. **Slurry loss or declining stabilization properties would require an initial attempt to introduce new slurry to replace the destabilized slurry or mix in chemical slurry enhancers such as Stone or Sand Stop. If these attempts fail to resolve the problem BDC would have to continue to extend the casing to bypass the zone that was creating the problem with the potential to end up, in a worst case scenario, with full length permanent casing.**

(13) Description of the type of feet to be used to support the reinforcing steel cage in the drilled shaft. **Provided by KCC**

(17) Method for reinsertion of tremie pipe, if required. **To re-insert pumper tremie pipe the pipe must cleaned of concrete and re-inserted just above the top of the pour with a new foam ball inserted in the pipe. Concrete will then be pumped on top of the pour until the tremie pipe is full of concrete and the foam ball has been discharged. The tremie pipe can then be re-inserted a minimum of 5 feet into the existing pour and pumping can continue. A metal plate or wood plug can be substituted for the foam ball if required and it would be attached to the end of the tremie pipe via wire or duct tape.**

Thanks,
Don
Donald E. Bortle Jr.
Buffalo Drilling Company, Inc.

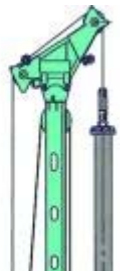

BUFFALO DRILLING COMPANY
INC.
10440 MAIN ST.
CLARENCE, NY 14031
PHONE (716)759-7821
FAX (716)759-7823

January 13th, 2015

Attn: Volker Burkowski
Kubricky Construction Corp.

Project: Replacement of River Street Bridge
North River Street
Rutland, Vermont

Addressing Direct Comments ON Rutland City BRF 3000 (16) Drilled Shaft Submittal (19) – Revised Drilled Shaft Installation

1. The Drilled Shaft Submittal should be comprised of a single comprehensive document. There are discrepancies existing between multiple documents that should be resolved. **Done**
2. The plans show temporary casing and the Contractor is proposing to use permanent casing for the upper portion of the shaft. The use of permanent casing is not rejected, however, the change does effect the skin resistance. The total length of the shaft should be evaluated and verified as appropriate with this modification. **Answered in setion P-1 of submittal document "0b Submittal for Rutland City Bridge Caisson Construction Submittal - Rev 2"**
3. There are discrepancies between the various documents provided concerning certain elevations. These need to be addressed. For instance, the elevations given in "0e Temporary + Permanent Casing Graphic - Rev 1.xls", don't agree with the elevations given in "0b Rutland City Bridge Caisson Construction Submittal - Rev 1.doc" **Either directly fixed or eliminated through revised installation methods.**
   a. Bottom of shaft: in "0e" = 437.3, in "0b"=**432.3**, the bottom of shaft elevation needs to be 432.3, as per the plans. **Done**
   b. Bottom of permanent casing: in "0e" =485.32, in "0b"=480.32 **Done - Revised**
   c. Bottom of 9 (or 10 ft) diameter casing: in "0e" =503.32, in "0b"=502.32 **Done - Revised**
   d. Bottom of 12 foot diameter casing: in "0e" =**516.32**, in "0b"=515.32 **Done**
   e. Top of temporary 12 foot diameter casing : in "0e" = **526.32**, in "0b"=525.32 **Done**
4. In "0g 12.0 Foot Diameter Temporary Casing - Add 12-22.pdf", the 12 foot diameter casing is given as being **10 feet** long, this agrees with "0e", and with "0b", although the elevations differ. **Done**
5. In "0h 9-10.0 Foot Diameter Permanent Casing - Add 12-22.pdf", the 9 or 10 foot casing is given as being 15 feet long, with 2.5 feet of it within the larger casing. So the bottom of this casing should be at elevation 525.32-10-12.5=502.82, which is halfway between the bottom of casing elevations given in "0b" and "0e". **Done - Revised**
6. In "0i 8.0 Foot Diameter Permanent Casing - Add 12-22.pdf", the 8 foot casing is given as being 40 feet long, and the bottom elevation should be 525.32-10-12.5-40+2.5=465.32, but in "0e" this casing is shown as being 25 feet long and the bottom elevation is given as 485.32. Identify which is correct, **45+ feet** of 8 foot diameter casing or 25 feet. **Done - Revised**
7. If the tremie pump is to be used, does down pressure need to be applied to the tremie pipe to ensure that the Pipe maintains the 5 foot embedment? Often times the pump will cause the tremie pipe to jump as the concrete surges. **Answered in setion J-1 of submittal document "0b Submittal for Rutland City Bridge Caisson Construction Submittal - Rev 2"**

Thanks,
Don
Donald E. Bortle Jr.
Buffalo Drilling Company, Inc.

From: Pockette, Tim [mailto:Tim.Pockette@state.vt.us]
Sent: Wednesday, January 21, 2015 8:18 AM **To:** Harrington, Jonathan; Volker Burkowski; Tom Nassivera
Cc: Benda, Chris; Wild, Jim; Mackintosh, Mark; Markie, Logan; McIntosh, Mindon (Buffalo); Bosch, Bethany; Reed, Jeremy; Evans-Mongeon, Martha; Carlson, Carolyn **Subject:** FW: Drilled Shaft Submittal

1) Buffalo Drilling indicated no free falling concrete after the top was cleaned off. **That option was removed and will pump concrete 2-3 feet past top of caisson before mucking** – noted in beginning **Summary**

2) Carrara did indicate that they could not heat the aggregates and that the mix design would include temperature limitati9ons for the aggregate stockpiles.

3) the mix design would have the slump vs time testing included in it as well.

4) The mix design needs to indicate that it is a SCC mix in the Concrete Class line, not in the note on the bottom but in the mix design.

5) There needs to be a verification process for cleanliness of the rebar once the top concrete has been mucked out after the 8' casing has been removed and prior to pouring the remaining concrete. **No mucking will take place until the concrete has risen past the top of caisson elevation by 2 to 3 feet** – noted in beginning **Summary and noted under J) Concrete Placement**

6) about differential temperature gradients, can we add a thermo coupling 20' down to measure temperatures in the drilled shaft itself?

Thanks, Tim

AND
Notes from Harper Callahan

Concrete Mix Design

7) Spread Test Results needed – I believe Bob Carrara is working on this

8) Use Retarder for duration of pour + 2hrs

Concrete Pour Section J-1

9) Temp 8' casing will be pulled after concrete is 5' into permanent 9' casing. Waste will be mucked off and pour will continue with the pump – **revised to minimum 7 to 10 feet into 9' diameter permanent casing then 8' temporary casing can be pulled – pumping will resume and mucking will not occur until the concrete hase risen 2 to 3 feet past the top of caisson elevation** – noted in beginning **Summary**

10) Revise pump supplier and cut sheets – **Done in Summary and 9e and f**

11) Pour will commence within 8 hrs of the final cleaning of the shaft – **noted under J) Concrete Placement**

10) Waste Concrete is considered the top 24" of initial concrete placed – **noted under J) Concrete Placement** and noted in beginning **Summary**

12) Winter Concrete Plan
KCC will provide at end of BDC submittal

13) Lighting Plan
KCC will provide at end of BDC submittal

4) Lifting Plan for Rebar Cage
KCC will provide at end of BDC submittal

0d Methods for Checking Shaft Alignment, Plumbness, and Diameter

Numerous tools are used for assuring the alignment, plumbness and diameter of the drilled shaft. These can range from as simple as a pre-measured stick or bar to computerized and controlled GPS locating devise. Buffalo Drilling Company, Inc (BDC) in conjunction with *Kubricky Construction Corp.* (KCC) will follow some of the following protocol to assure that the drilled shaft remains within specified tolerances.

A) Layout of Center of Shaft, Elevations, and Depth/Alignment Review During Shaft Construction

Layout of center of shafts with offsets and benchmark elevations will be provided by the owner, general contractor, or BDC, if contractually obligated, using any number of the following methods: registered surveyor, one stations, GPS system, transits, string lines, tape measures, and laser levels. On this Project, *KCC* will be providing the layout and survey as needed.

Before drilling, BDC will review plans with GC to verify the selected drill location, use our laser leveling system to establish existing elevation and calculate depth required to reach the BoC, set up on the first shaft by centering the drill bit over the hub or staked center of the shaft, check offsets established by others or set our own offsets, mark the distance to shaft on the drill table and/or use the caisson rigs computer control location system, check the level on the rig Kelly bar using levels and/or using the leveling system in the computer console of the drill rig, then begin drilling the shaft.

After the hole has been advanced its initial distance of a couple of feet, the hole center can be checked quickly using the established offsets to verify that the center and edges of the shaft fall within the required location parameters. A weighted tape can be used by lowering it down the shaft and checking depths as the shafts is advanced. These alignment and elevation review processes will be repeated, as needed, until the shaft has reached the BoC elevation.

B) Checking Shaft Diameter and Plumbness

Shaft Diameter can be established by the measurement of the tooling used to cut the shaft, the outside diameter of any temporary or permanent casing used during construction of the shaft, or by using a defined length cross adaptor attached to the Kelly bar and lowered down the shaft.

There are numerous methods for checking the plumbness of shaft construction beginning with the use of levels, plumb Bobs, and/or the leveling system in the drill rig's computer console to level the Kelly bar and then make a visual review as the bar is tabled close to the edge of the shaft. Variations in distance of the bar from the edge of the shaft will ascertain if there is any major deviation from the vertical specification requirements. When installing either temporary or permanent casing, the plumbness of the shaft can be checked by placing a three foot level on the inside of the shaft in the perpendicular or by checking the level across the top of a straight cut of casing. More accurate measurements can be made through the use of a plumb Bob and a bit of geometry, as depicted on pages 2 and 3 of the attached 0e NYS DOT Construction Monitoring guidelines.

C) Measurement of Top and Volume of Concrete

Pages 4 of the attached 0e NYS DOT Construction Monitoring guidelines depicts the float method for checking the top level of the poured concrete and page 5 offers a chart that quantifies the volume of concrete per linear foot based on the diameter of the shaft. These concrete volumes are also calculated by the drill crews using slide calculators that are provided by many concrete suppliers.

D) Shaft Monitoring Tools that May be Employed

Levels – 1.0, 2.0, and/or 4.0'
Plum Bobs
Tape Measures
Weighted Tapes
Float Tape
Slide Concrete Calculators
Laser Level
Offset Sticks
Stakes
Calculator

7. CONSTRUCTION MONITORING

7.1 Monitoring Aids

The next four pages provide the following drilled shaft construction monitoring aids:

1) Suggested Method to Check Shaft Plumbness if Horizontal Tolerance is Known - describes a quick procedure to determine if the shaft is out of "plumb" (required verticality). As specified in the specification the allowable tolerance from the required verticality is 2% for vertical shafts, 3% for battered shafts. This procedure assumes that the actual tolerance for the shaft has been computed, based on the allowable tolerance from the required verticality (either 2% or 3%) and the total shaft length. This test should be performed when the shaft excavation is completed.

2) Suggested Method to Check Shaft Plumbness - describes a procedure to determine a shaft's plumbness at any point during construction. It is essentially the same procedure as above. The figure shows three measurements for each check. Keep in mind that if the casing is continuous (i.e. one piece) or no casing is used, only one measurement is required for a plumbness check. This procedure should be performed periodically as the shaft is progressed to maintain correct shaft verticality.

3) Suggested Method to Check Concrete Level - describes a procedure to determine the concrete level during pouring. Determining the correct concrete level during the pour is essential for the completion of the concrete curve (a key part of the inspection forms). Basically a tape measure with its end attached to something that will sink in water and other drilling fluids, but will float on the wet concrete is used for this procedure. This will allow the inspector to determine the level of concrete in the shaft at any point during the pour, even if the shaft is filled with water or drilling fluid.

4) Shaft Areas and Volumes Table - Is a self explanatory table that aids the inspector in determining the shaft's volume.

Suggested Method to Check Shaft Plumbness if Horizontal Tolerance is Known

The horizontal tolerance is represented as a percentage of the vertical shaft length in the specifications. For example: a shaft has a horizontal tolerance of 2% and is 50 ft. (15 m) long. The allowable horizontal tolerance is:

0.02 x 50 ft. = 1 ft.
or
0.02 x 15 m = 0.3 m

Knowing the allowable horizontal tolerance, you lower the plumb bob to the bottom of the shaft and measure off the allowable tolerance distance from the line to the edge of the casing. If the plumb bob hits the shaft anywhere but the bottom, the shaft is out of tolerance. Repeat procedure around shaft at regular intervals.

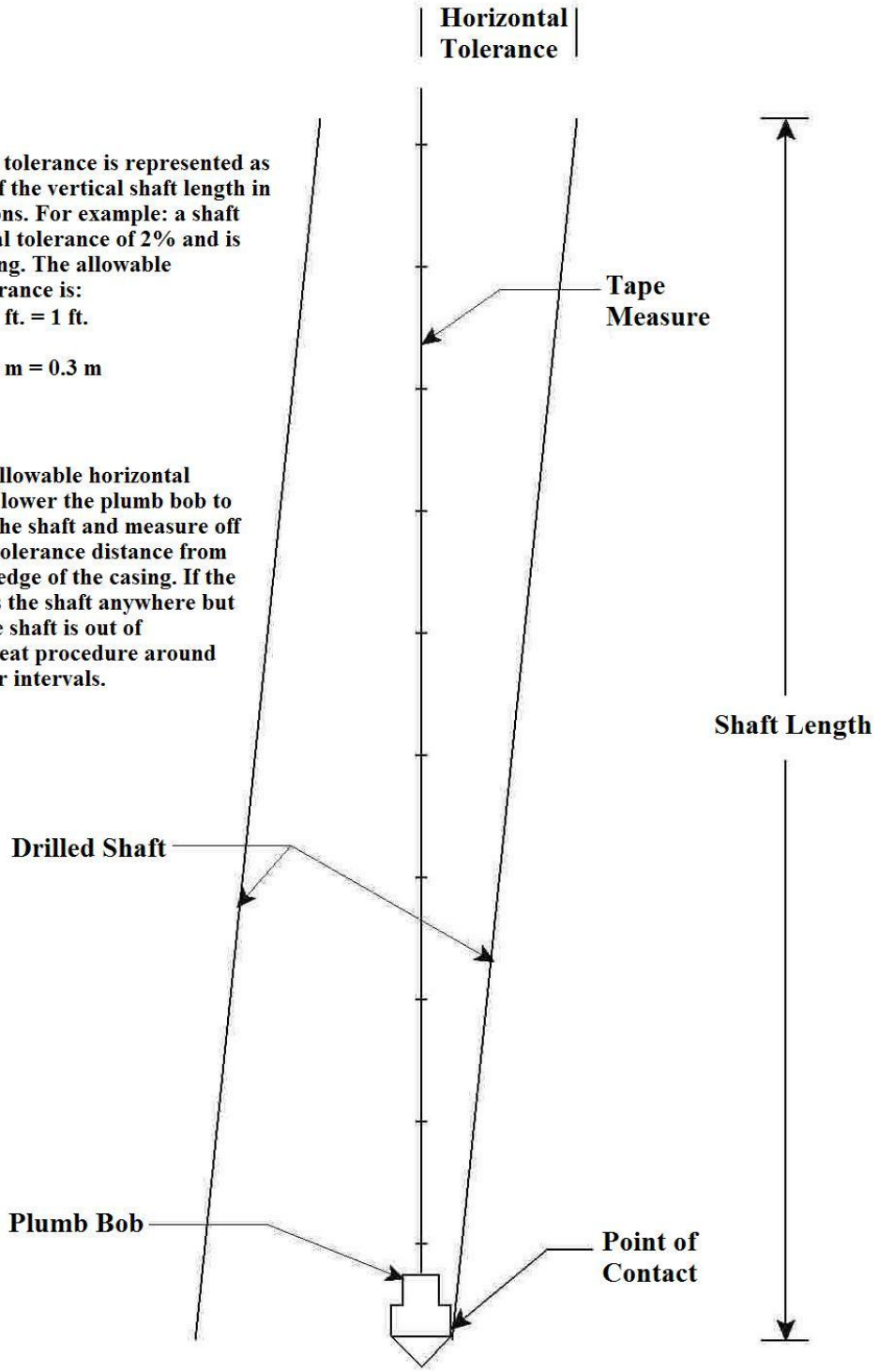

Suggested Method to Check Shaft Plumbness

$\tan \Phi_1 = X_1 / Y_1$

$\arctan (X_1 / Y_1) = \Phi_1$

$\arctan (X_2 / Y_2) = \Phi_2$

$\arctan (X_3 / Y_3) = \Phi_3$

$\Phi_{AVG.} = (\Phi_1 + \Phi_2 + \Phi_3)/3$

$L \tan \Phi_{AVG.} \leq$ Specified Tolerance

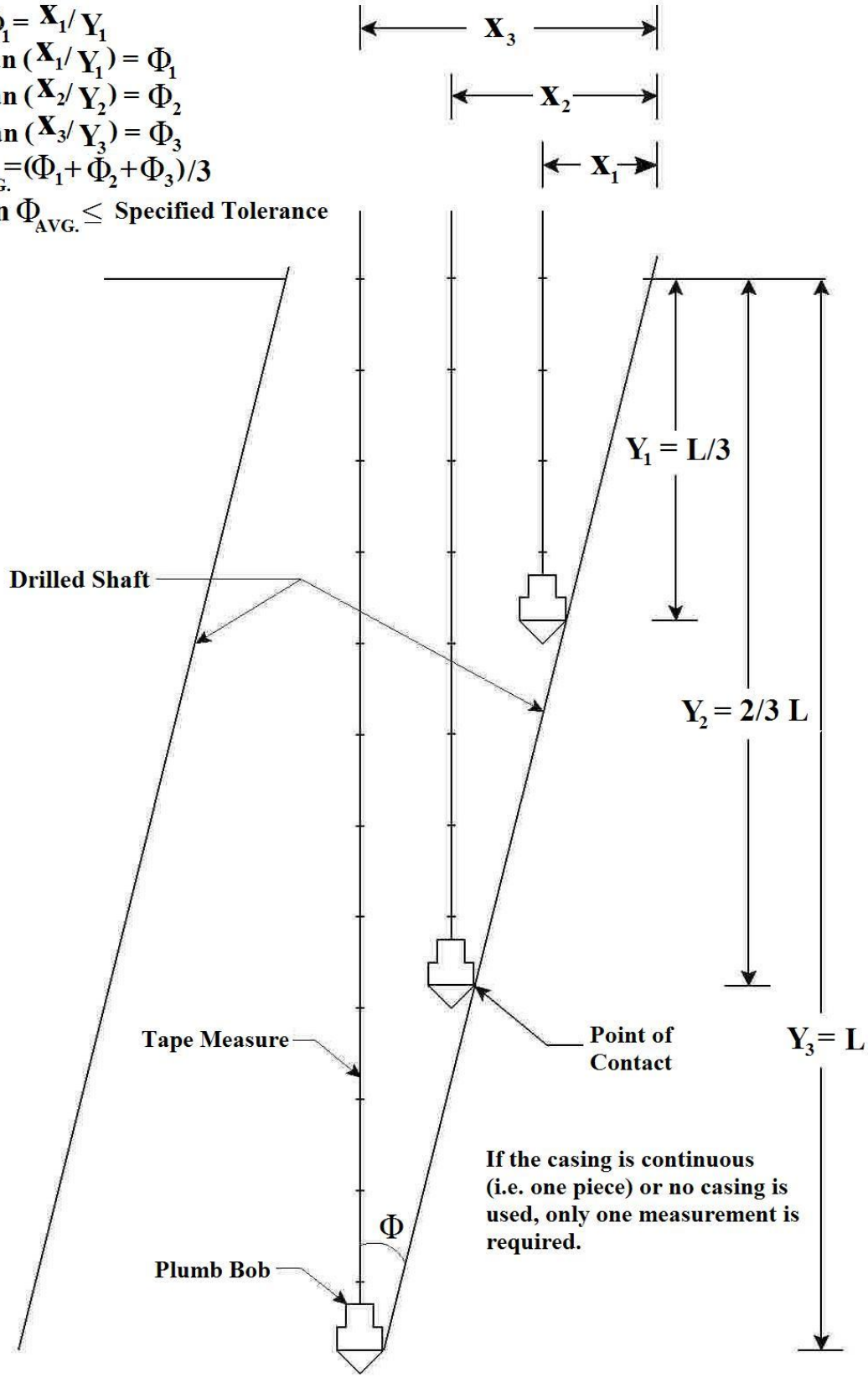

Suggested Method to Check Concrete Level

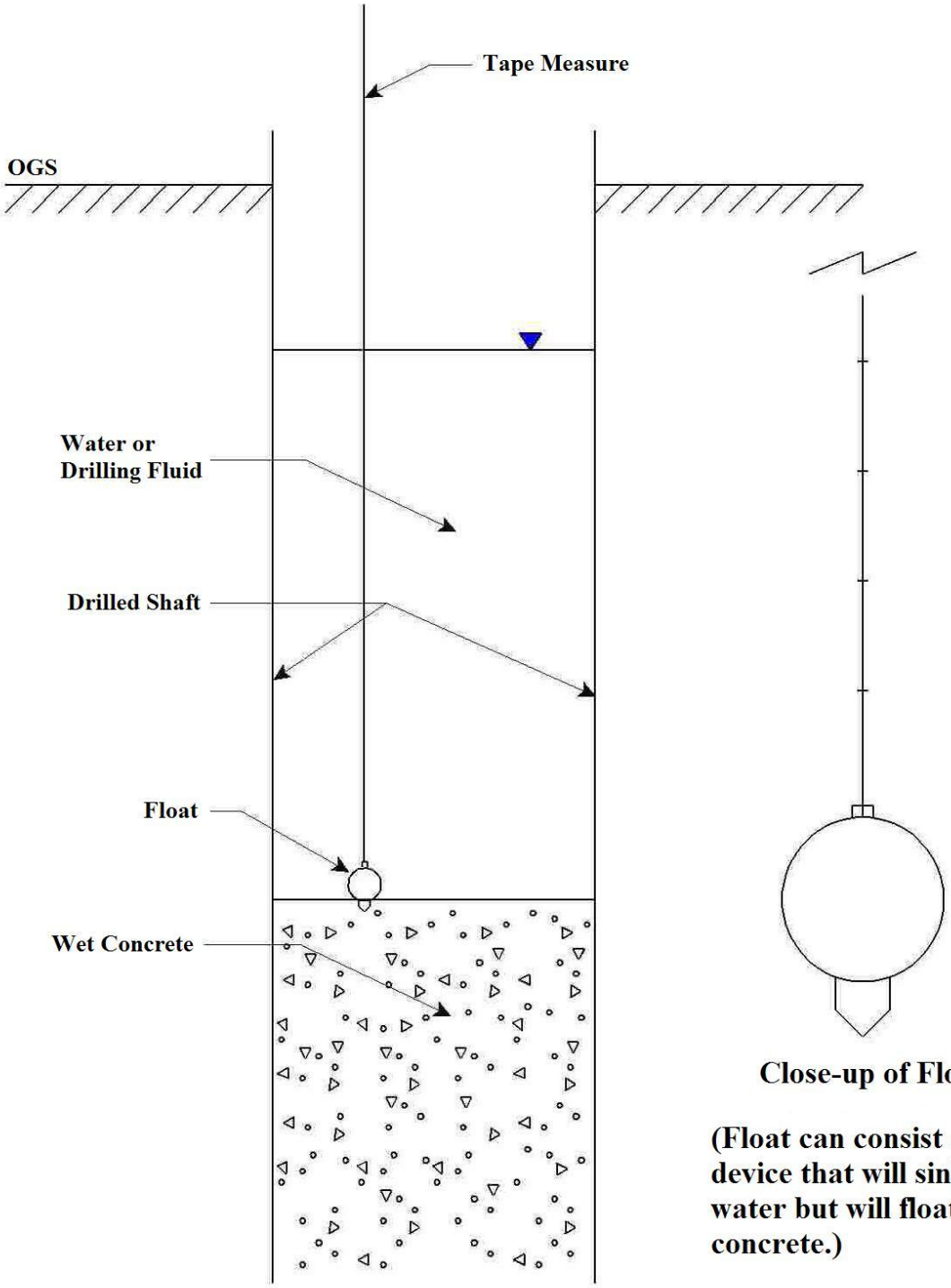

Close-up of Float

(Float can consist of any device that will sink in water but will float on wet concrete.)

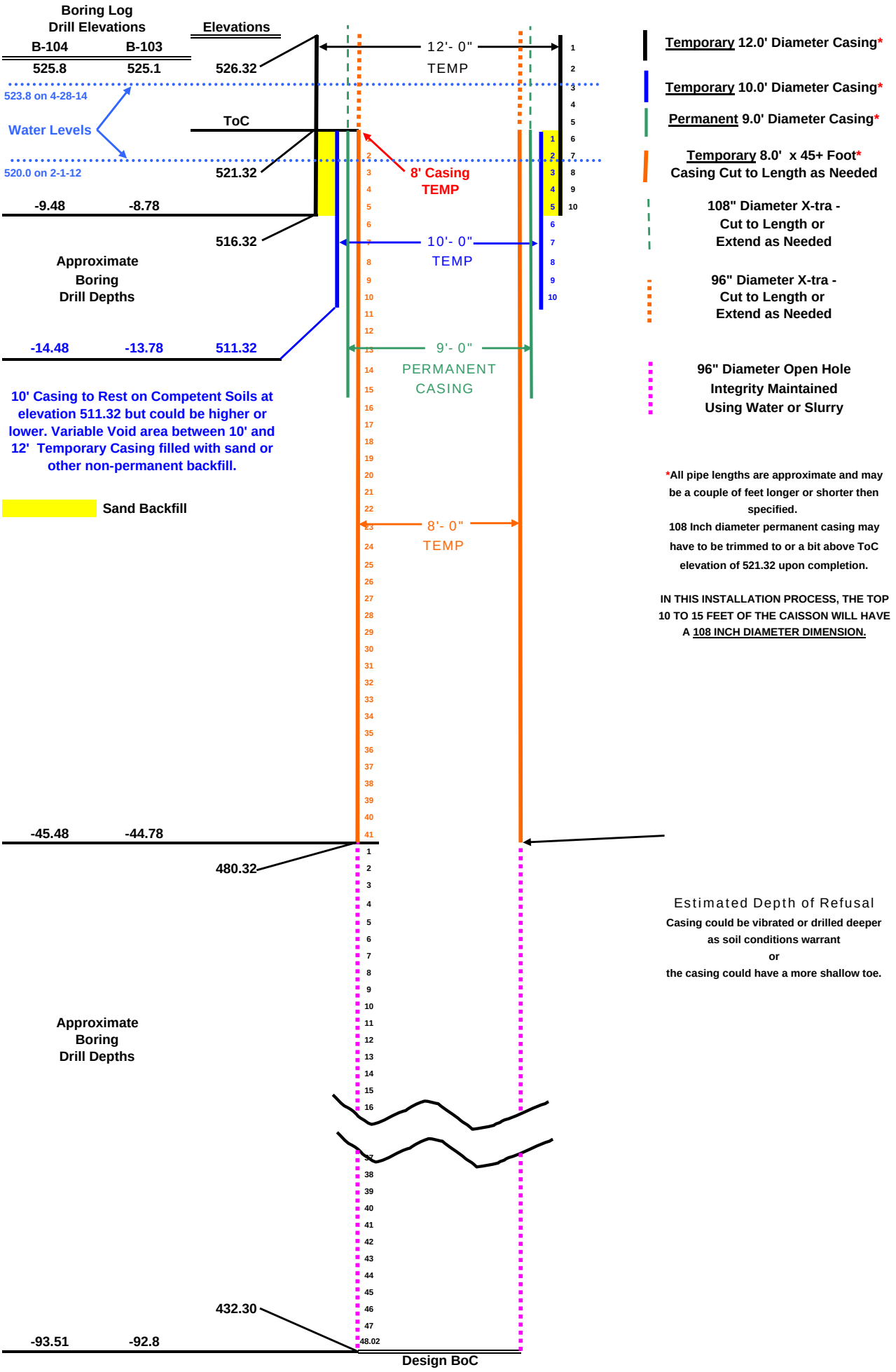
Boring Log
Drill Elevations
B-104
B-103
525.8
525.1
Elevations
526.32
523.8 on 4-28-14
Water Levels
520.0 on 2-1-12
ToC
521.32
-9.48
-8.78
516.32
Approximate
Boring
Drill Depths
-14.48
-13.78
511.32
10' Casing to Rest on Competent Soils at elevation 511.32 but could be higher or lower. Variable Void area between 10' and 12' Temporary Casing filled with sand or other non-permanent backfill.
Sand Backfill
-45.48
-44.78
480.32
Approximate
Boring
Drill Depths
432.30
-93.51
-92.8
Design BoC
12'- 0"
TEMP
8' Casing
TEMP
10'- 0"
TEMP
9'- 0"
PERMANENT
CASING
8'- 0"
TEMP
Temporary 12.0' Diameter Casing*
Temporary 10.0' Diameter Casing*
Permanent 9.0' Diameter Casing*
Temporary 8.0' x 45+ Foot*
Casing Cut to Length as Needed
108" Diameter X-tra -
Cut to Length or
Extend as Needed
96" Diameter X-tra -
Cut to Length or
Extend as Needed
96" Diameter Open Hole
Integrity Maintained
Using Water or Slurry
*All pipe lengths are approximate and may be a couple of feet longer or shorter then specified.
108 Inch diameter permanent casing may have to be trimmed to or a bit above ToC elevation of 521.32 upon completion.
IN THIS INSTALLATION PROCESS, THE TOP 10 TO 15 FEET OF THE CAISSON WILL HAVE A 108 INCH DIAMETER DIMENSION.
Estimated Depth of Refusal
Casing could be vibrated or drilled deeper
as soil conditions warrant
or
the casing could have a more shallow toe.

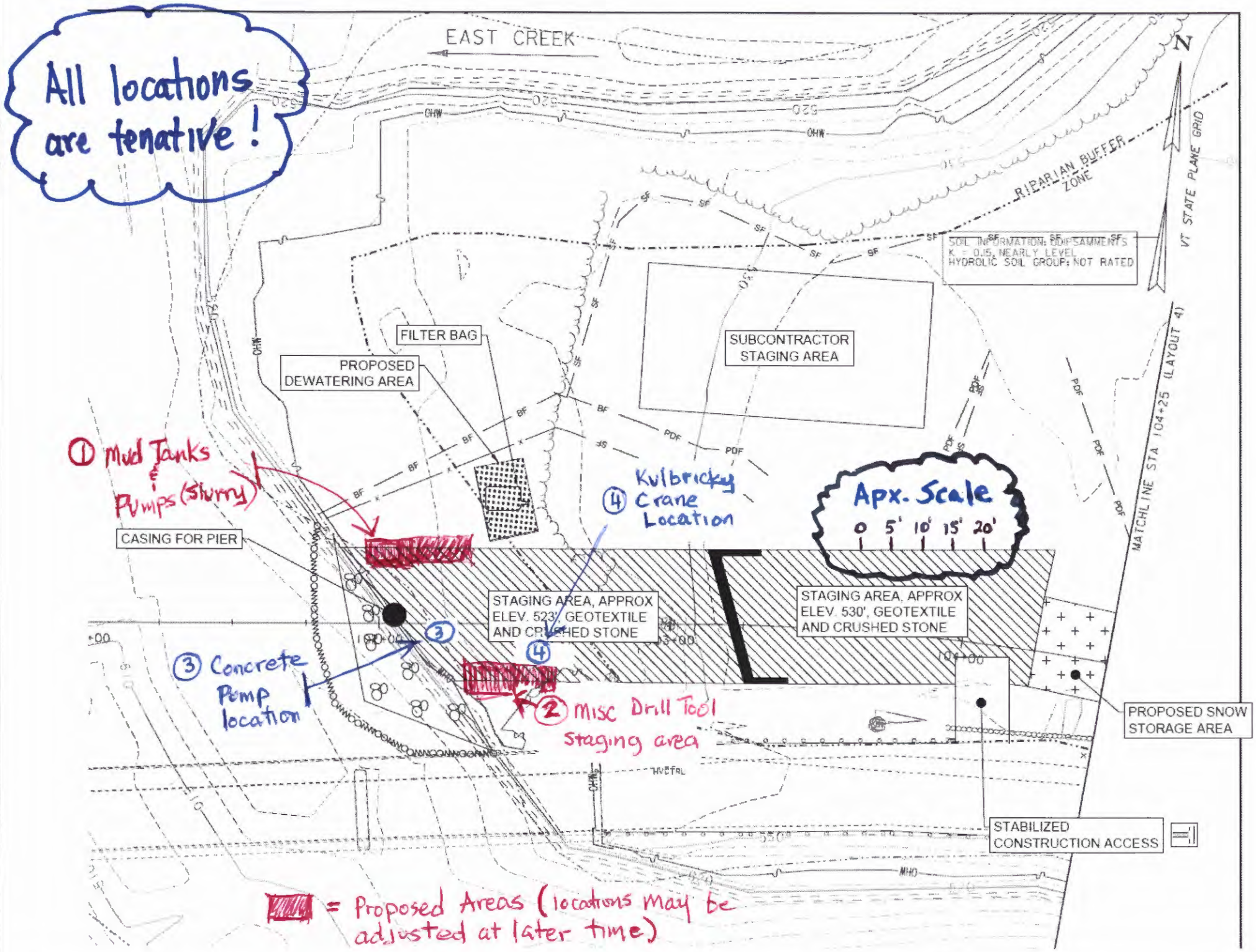
All locations are tenative!
EAST CREEK
N
VT STATE PLANE GRID
RIPARIAN BUFFER ZONE
SOIL INFORMATION: ODIPSAMMENTS
K = 0.15, NEARLY LEVEL
HYDROLIC SOIL GROUP: NOT RATED
SUBCONTRACTOR STAGING AREA
FILTER BAG
PROPOSED DEWATERING AREA
① Mud Tanks & Pumps (Slurry)
CASING FOR PIER
④ Kulbricky Crane Location
Apx. Scale
0 5' 10' 15' 20'
STAGING AREA, APPROX ELEV. 523', GEOTEXTILE AND CRUSHED STONE
STAGING AREA, APPROX ELEV. 530', GEOTEXTILE AND CRUSHED STONE
③ Concrete Pump location
② Misc Drill Tool Staging area
PROPOSED SNOW STORAGE AREA
STABILIZED CONSTRUCTION ACCESS
MATCHLINE STA 104+25 (LAYOUT 4)
= Proposed Areas (locations may be adjusted at later time)

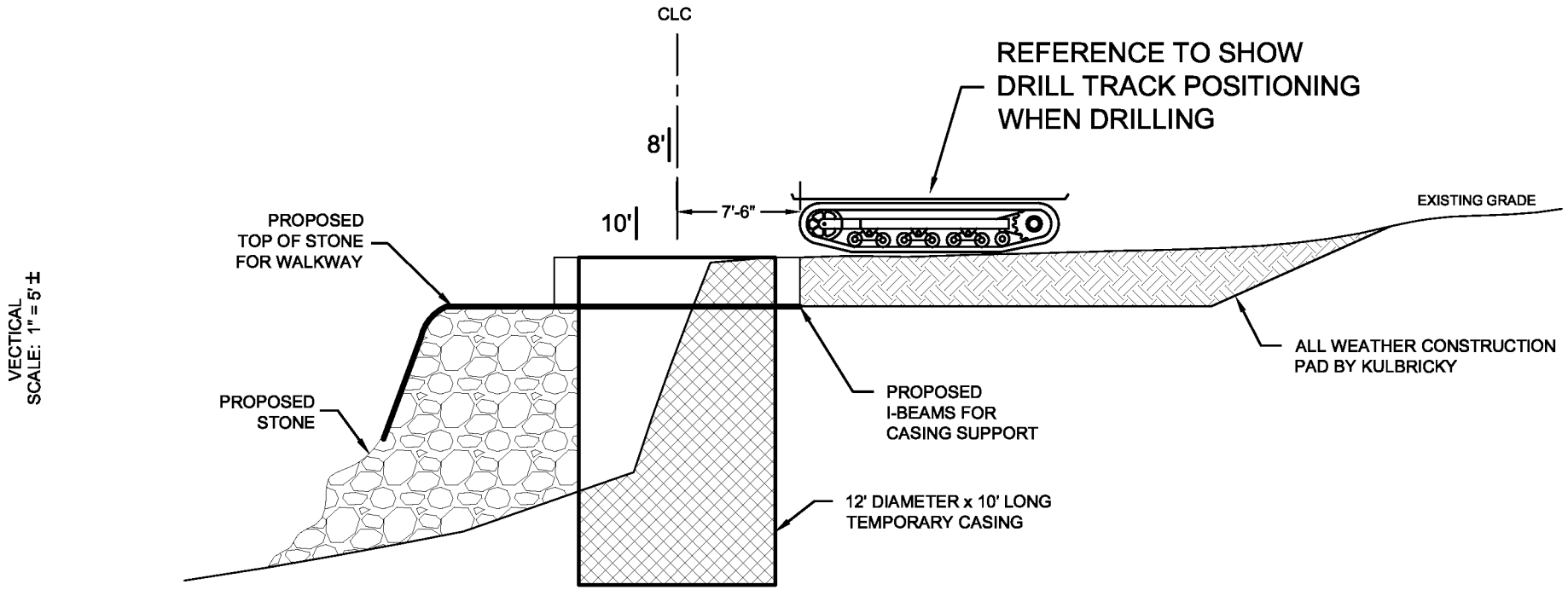

8'I = 8' CLC @ 5' ELEVATION

10'I = 10' TO CLC @ 0' ELEVATION

CLC = CENTERLINE OF CAISSON

= AREA TO BE EXCAVATED / DRILLED IN COOPERATION WITH KCC.

HORIZONTAL
SCALE: 1" = 10' ±

LEGEND	BARRON & ASSOCIATES, P.C. & BUFFALO DRILLING COMPANY 10440 MAIN ST. CLARENCE, NY 14031 (716)759-7821 FAX (716)759-7823 INFO@BUFFALODRILLING.COM INFO@BARRONANDASSOCIATESPC.COM DRAWN: DAN KASPROWICZ	CLIENT: KUBRICKY CONSTRUCTION CORPORATION 238 BAY ROAD QUEENSBURY, NEW YORK 12804-2006 PROJECT: REPLACEMENT OF RIVER STREET BRIDGE NORTH RIVER STREET RUTLAND, VERMONT	CASING BRACING - PROFILE 0 5 10 20 JOB NO.: 14-150 / SCALE: AS NOTED DATE: 12/22/2014 / FIGURE NO. 2

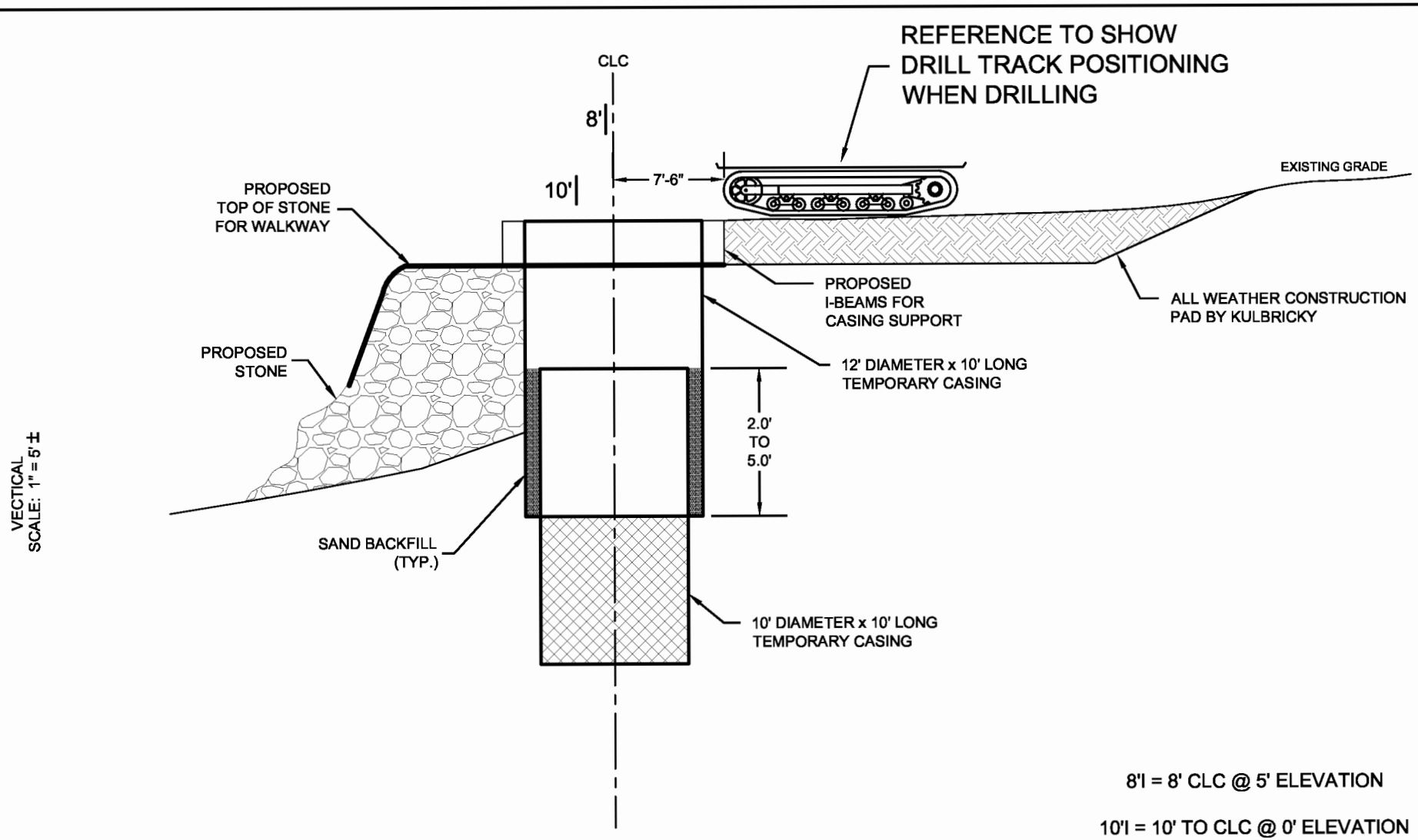

LEGEND	BARRON & ASSOCIATES, P.C. & BUFFALO DRILLING COMPANY 10440 MAIN ST. CLARENCE, NY 14031 (716)759-7821 FAX (716)759-7823 INFO@BUFFALODRILLING.COM INFO@BARRONANDASSOCIATESPC.COM DRAWN: DAN KASPROWICZ	CLIENT: KUBRICKY CONSTRUCTION CORPORATION 238 BAY ROAD QUEENSBURY, NEW YORK 12804-2006 PROJECT: REPLACEMENT OF RIVER STREET BRIDGE NORTH RIVER STREET RUTLAND, VERMONT	10' CASING - PROFILE 0 5 10 20 JOB NO.: 14-150 / SCALE: AS NOTED DATE: 1/13/2015 / FIGURE NO. 4

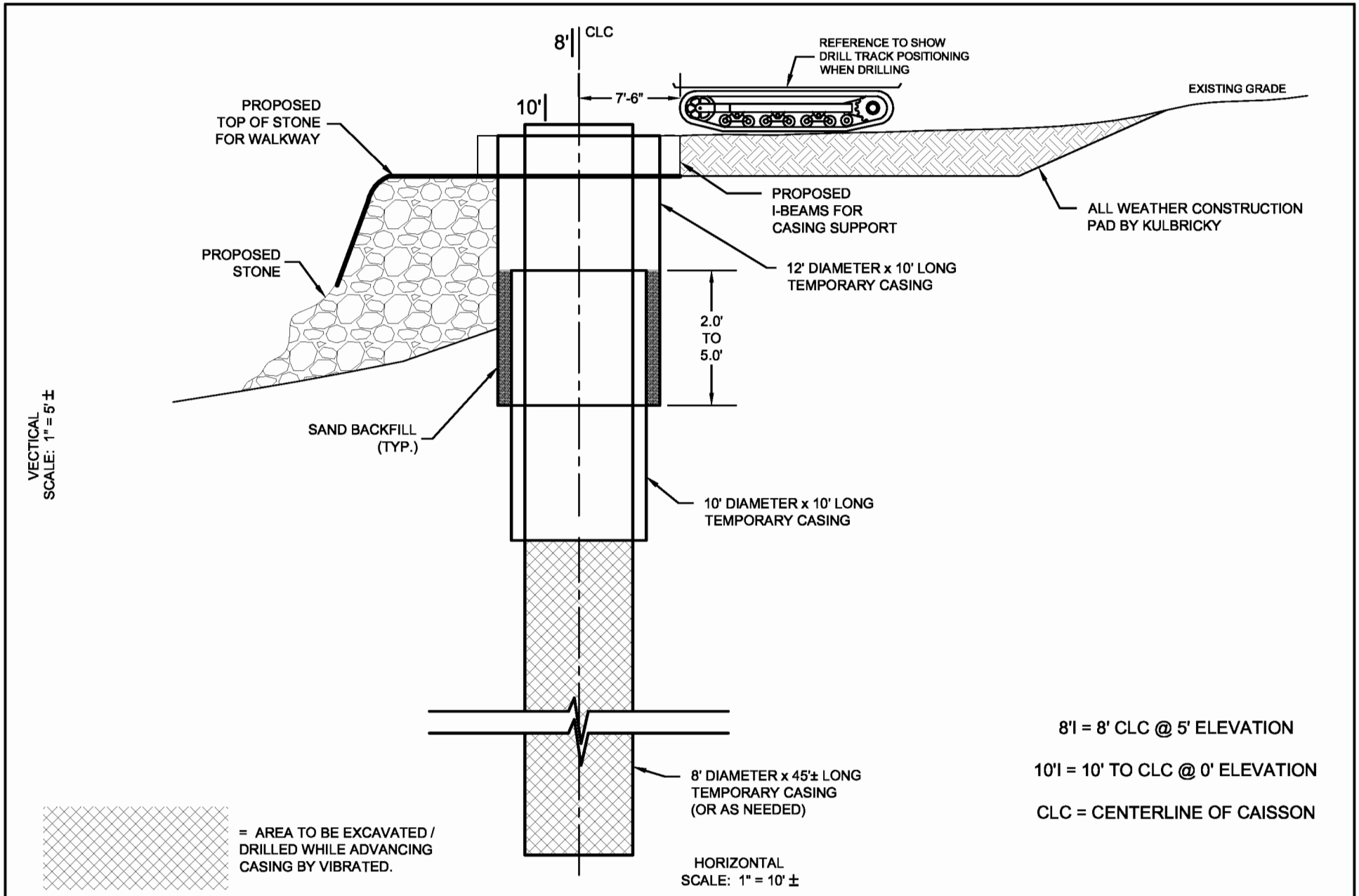

LEGEND	BARRON & ASSOCIATES, P.C. & BUFFALO DRILLING COMPANY 10440 MAIN ST. CLARENCE, NY 14031 (716)759-7821 FAX (716)759-7823 INFO@BUFFALODRILLING.COM INFO@BARRONANDASSOCIATESPC.COM	CLIENT: KUBRICKY CONSTRUCTION CORPORATION 238 BAY ROAD QUEENSBURY, NEW YORK 12804-2006	8' CASING - PROFILE 0 5 10 20	
	DRAWN: DAN KASPROWICZ	PROJECT: REPLACEMENT OF RIVER STREET BRIDGE NORTH RIVER STREET RUTLAND, VERMONT	JOB NO.: 14-150	SCALE: AS NOTED
			DATE: 1/13/2015	FIGURE NO. 5

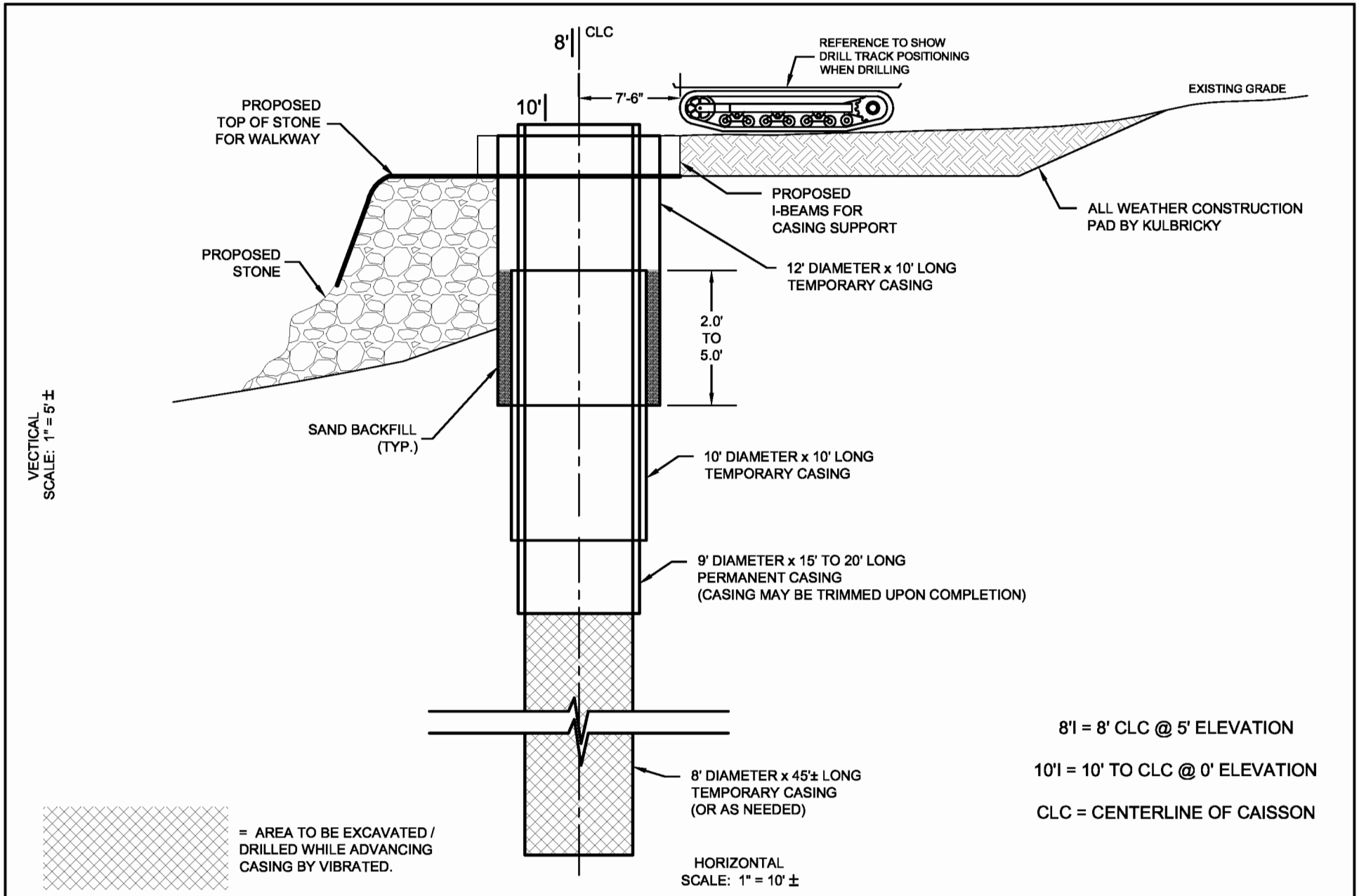

LEGEND

BARRON & ASSOCIATES, P.C. &
BUFFALO DRILLING COMPANY
10440 MAIN ST.
CLARENCE, NY 14031
(716)759-7821
FAX (716)759-7823
INFO@BUFFALODRILLING.COM
INFO@BARRONANDASSOCIATESPC.COM

DRAWN: DAN KASPROWICZ

CLIENT: KUBRICKY CONSTRUCTION CORPORATION
238 BAY ROAD
QUEENSBURY, NEW YORK 12804-2006

PROJECT: REPLACEMENT OF RIVER STREET BRIDGE
NORTH RIVER STREET
RUTLAND, VERMONT

9' PERMANENT CASING - PROFILE

0 5 10 20

JOB NO.: 14-150	SCALE: AS NOTED
DATE: 1/13/2015	FIGURE NO. 6

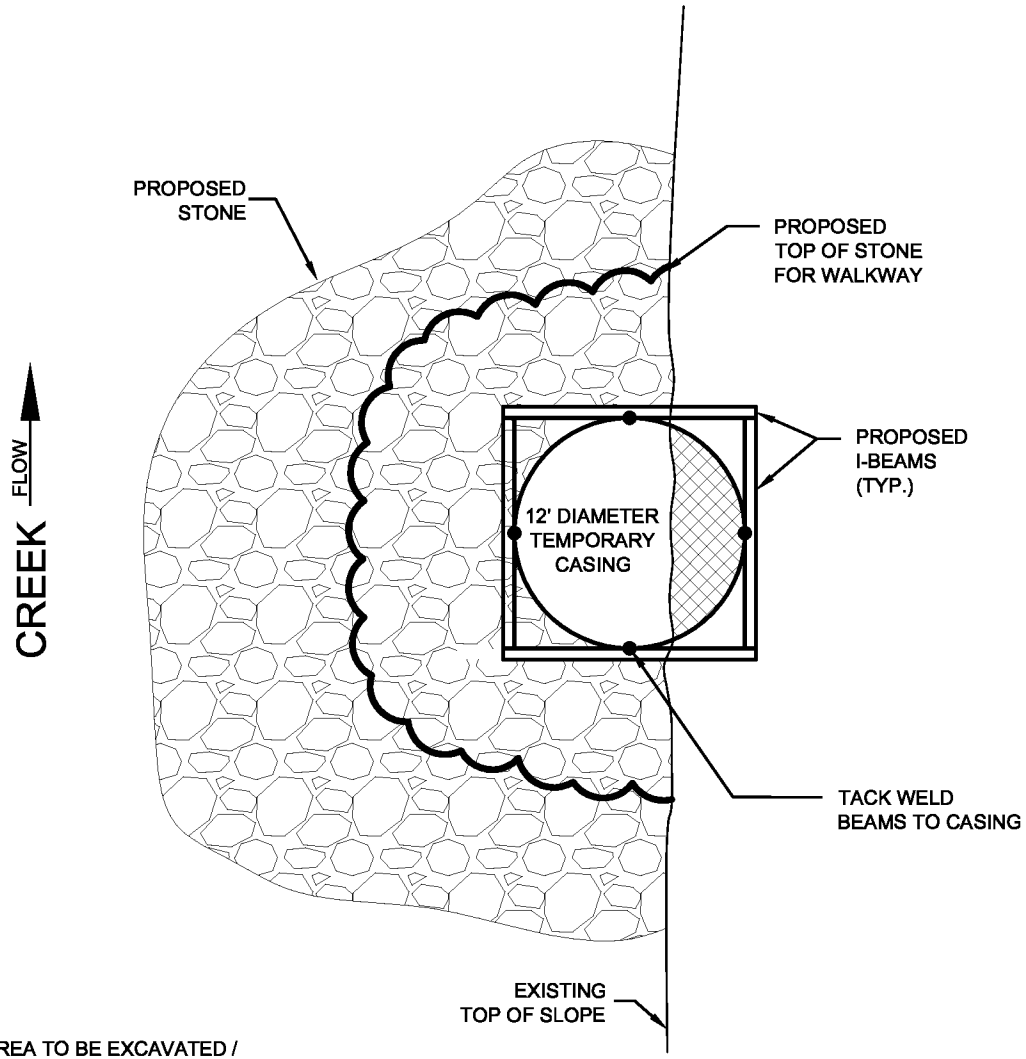

= AREA TO BE EXCAVATED / DRILLED IN COOPERATION WITH KCC.

LEGEND

BARRON & ASSOCIATES, P.C. &
BUFFALO DRILLING COMPANY
10440 MAIN ST.
CLARENCE, NY 14031
(716)759-7821
FAX (716)759-7823
INFO@BUFFALODRILLING.COM
INFO@BARRONANDASSOCIATESPC.COM

DRAWN: DAN KASPROWICZ

CLIENT: KUBRICKY CONSTRUCTION CORPORATION
238 BAY ROAD
QUEENSBURY, NEW YORK 12804-2006

PROJECT: REPLACEMENT OF RIVER STREET BRIDGE
NORTH RIVER STREET
RUTLAND, VERMONT

CASING BRACING - TOP VIEW

0 5 10 20

JOB NO.: 14-150	SCALE: 1" = 10'±
DATE: 12/22/2014	FIGURE NO. 3

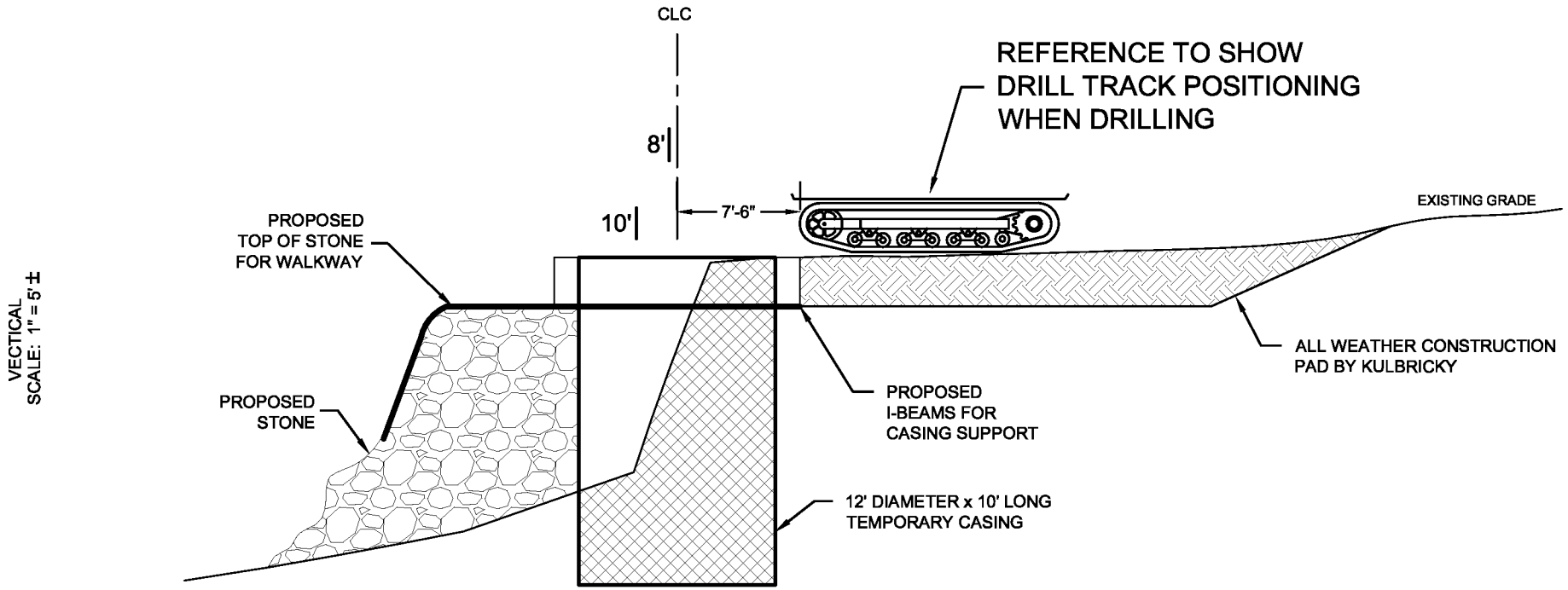

8'I = 8' CLC @ 5' ELEVATION

10'I = 10' TO CLC @ 0' ELEVATION

CLC = CENTERLINE OF CAISSON

= AREA TO BE EXCAVATED / DRILLED IN COOPERATION WITH KCC.

HORIZONTAL
SCALE: 1" = 10' ±

LEGEND	BARRON & ASSOCIATES, P.C. & BUFFALO DRILLING COMPANY 10440 MAIN ST. CLARENCE, NY 14031 (716)759-7821 FAX (716)759-7823 INFO@BUFFALODRILLING.COM INFO@BARRONANDASSOCIATESPC.COM DRAWN: DAN KASPROWICZ	CLIENT: KUBRICKY CONSTRUCTION CORPORATION 238 BAY ROAD QUEENSBURY, NEW YORK 12804-2006 PROJECT: REPLACEMENT OF RIVER STREET BRIDGE NORTH RIVER STREET RUTLAND, VERMONT	CASING BRACING - PROFILE 0 5 10 20 JOB NO.: 14-150 / SCALE: AS NOTED DATE: 12/22/2014 / FIGURE NO. 2

SD20E TC320VH

	SD20E Metric	SD20E Imperial
Mast height	19,8m	65.0ft
Operating weight (Approx) c/w Kelly bar	59ton	130,000lb
Rotary head	KDK200	KDK200
Torque at 300 bar (nominal)	200kNm	147,500lbf-ft
Speed of rotation	8-30rpm	8-30rpm
Crowd system		
Crowd force push / pull (effective)	160/200kN	35,970/ 44,960lbf
Stroke (kelly system)	5.7m	18.7ft
Stroke (CFA system)	-	-
Speed (down / up)	5 / 6.5m/min	16.4-21.3ft/min
Fast speed (down / up)	-	-
Main winch		
Line pull (1st layer)	180kN	40,470lbf
Rope diameter / Length	26mm / 90m	1.02inch / 263ft
Max. line speed	60m/min	197ft/min
Auxilliary winch		
Line pull (1st layer)	75kN	16,860lbf
Rope diameter / Length	18mm / 60m	0.7inch / 164ft
Max. line speed	45m/min	147.6ft/min
Mast Inclination		
Backward / forward / lateral	15^0 / 5^0 / 4.5^0	15^0 / 5^0 / 4.5^0
Max. drilling diameter (uncased)	2000mm	78.7inch
Max. drilling diameter (cased)	1500mm	59.1inch

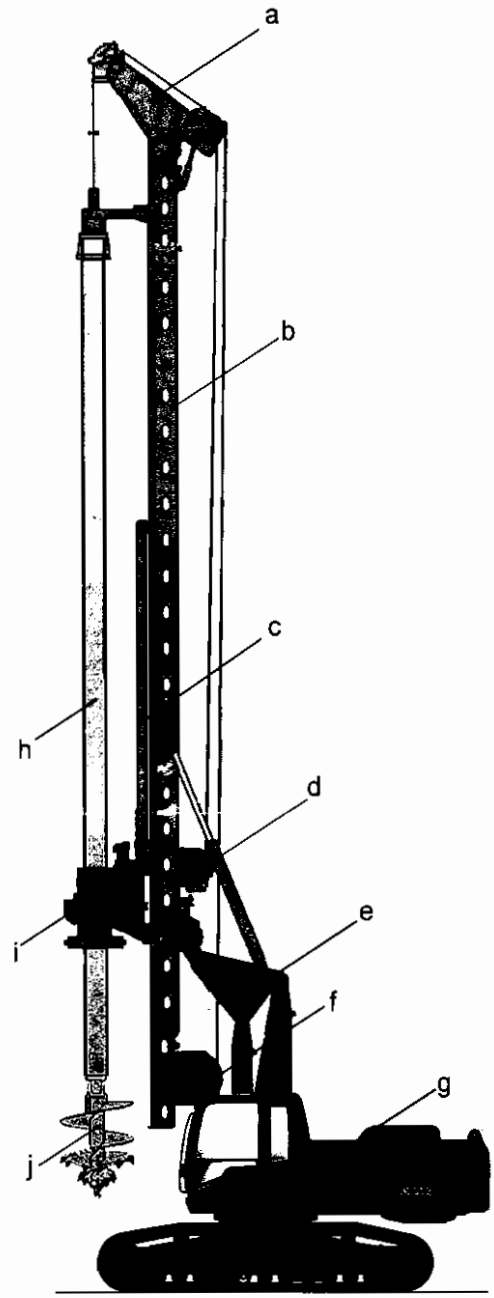

Main Feature of SD20E

1) Sheave Cathead use high-tensile steel and rigid for all kind of drilling purpose
2) Box type with interior reinforced rib to provide anti-twist form rotary head.
3) Parallelogram mast support provide adjustment for the working radius and always maintain the mast in vertical position.
4) Main winch are consisted with Rexroth motor and reduction gear box which can provide high line pull and reliable performance
5) Base machine is Caterpillar C325D c/w CAT C-7 diesel engine. Sound proof cabin with air-condition and advance monitoring system
6) Undercarriage with extendable track from 3.2 to 4.3m. Main components is impoted from Japan and traction gear from Italy.
7) Rotary head can provide power and stable torque. Hydraulic motor is Rexroth and reduction gear box is Brevini
8) Special design kelly bar with double kelly guide track to provide rigid and long life using.

Main Components

a. Mast head
b. Mast
c. Crowd cylinder
d. Auxiliary winch
e. Mast support
f. Main winch
g. Base carrier
h. Kelly bar
i. Rotary head
j. Drilling tools

The multi-purposed hydraulic drilling rig SD20E is specially designed for suiting the following application

- Large diameter cased bore piles with Kelly Bar
- Air actuated DTH hammer drilling
- Reverse Circulation Drilling (RCD)

The main features of SD20E included:

- 50ton class machine
- High torque KDK200 rotary head
- Powerful Caterpillar C-7 diesel engine
- Advance hydraulic system
- Advance PLC monitoring and control system
- Retractable undercarriage
- Self-erection parallelogram mast support system
- High line pull main winch

Option feature included:

- Crowd winch load indicator
- Casing drive adaptor
- Kelly bar
- Drilling tools

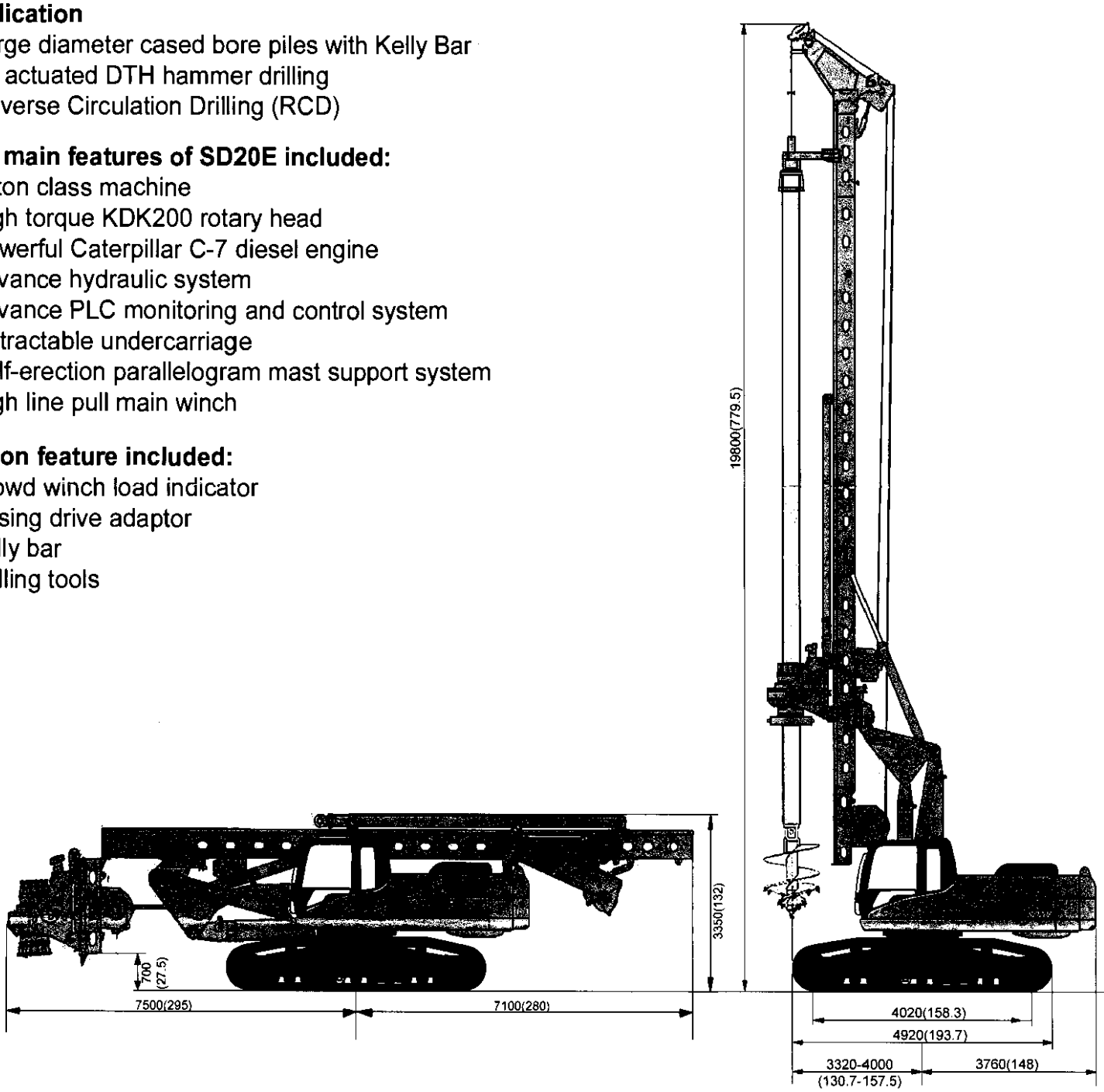

* ( ) inches

ICE® Model 44

Hydraulic Vibratory Driver/ Extractor with Model 350G Power Unit

Large vibrator combined with an economical power unit for a high performance, cost-effective system.
350 HP (261 kW) CAT C9 + engine meets all EPA & EU emission regulations.
Up to 80 tons (725 kN) line pull for extraction.

Optional bias weights up to 5500 lbs (2494 kg) to increase pile penetration rates in difficult soils.

Maximum efficiency and reliability are provided by our open-loop hydraulic system and application proven piston pumps and motors.

Remote-control pendant for vibrator and clamp with emergency stop. Engine speed control for fuel efficiency.

Full range of clamps available for sheet piling, H-Beams, pipe & caissons in addition to timber & concrete piles.

Adaptable for underwater, low headroom or box leads operation.

Heavy steel enclosure and fuel-tank subbase protect power unit.

Environmentally friendly Chevron Clarity® non-toxic, biodegradable hydraulic oil.

Designed and manufactured in the USA by ICE®, world leader in cost-effective foundation equipment since 1974.

ICE® Model 44

Hydraulic Vibratory Driver/ Extractor with Model 350G Power Unit

Dimensions

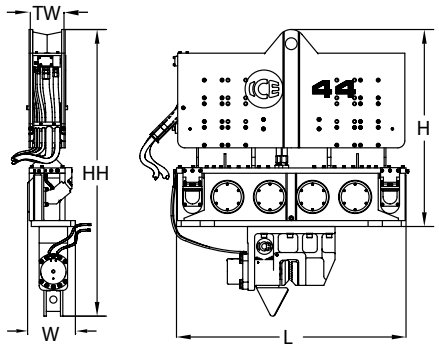

Clamps & Accessories

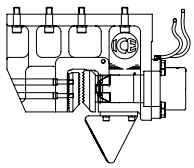

Model 140C Sheeting Clamp

Clamping force
140 tons, 1245 kN
Weight
2,200 lbs, 1000 kg

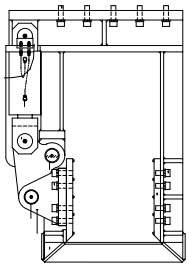

Model 85 Wood, Concrete & Pipe Clamp

Clamping force
85 tons, 756 kN
Weight
6,500 lbs, 2950 kg

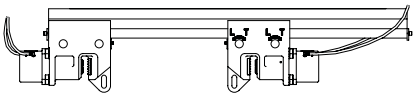

6.5' Caisson Beam with Model 100BH Caisson Clamps

Clamping force
220 tons, 1975 kN
Weight
3,285 lbs, 1500 kg

Other Model 44 Accessories

- 6' & 12' Caisson beams
- 10' Clamp extension
- 90° Turning plate
- Bias weights
- 26" leads sled
- Low-headroom suppressor
- Vibrator stand
- Wireless remote

Model 44 Vibrator Specifications

Eccentric moment	4,400 in-lbs	51 kg-m
Maximum frequency	1400 vpm	
Driving force	128 tons	1 140 kN
Centrifugal force	122 tons	1 085 kN
Amplitude (free w/o clamp)	1.1 in	28 mm
Standard line pull for extracting	54 tons	483 kN
Maximum line pull for extracting	80 tons	725 kN
Weight (no clamp or hoses)	12,450 lbs	5 647 kg
Non-vibrating weight	4,560 lbs	2 068 kg
Height without clamp (H)	84 in	2 134 mm
Length (L)	98 in	2 470 mm
Width (W)	22 in	560 mm
Throat width (TW)	14.25 in	362 mm
Hydraulic hose length	150 ft	46 m
Hydraulic hose weight	1,425 lbs	646 kg
Height with sheeting clamp* (HH)	122 in	3 096 mm
Weight with sheeting clamp & 1/2 hoses*	15,365 lbs	6 970 kg
Height with beam & caisson clamps*	110 in	2 784 mm
Weight with beam & caisson clamps*	17,775 lbs	8 065 kg

* See "Clamps and Accessories Manual" for in depth description

Model 350G Power Unit Specifications

Engine	Caterpillar C9	
Power	350 HP	261 kW
Operating speed	2,050 rpm	2 050 rpm
Max. motors pressure	5,500 psi	380 bar
Motors flow (no load)	102 gpm	385 lpm
Clamp pressure	4,500 psi	310 bar
Clamp flow	6 gpm	24 lpm
Weight (w/ full fluid & 1/2 fuel)	11,350 lbs	5 150 kg
Length	130 in	3 300 mm
Width	63 in	1 600 mm
Height	87 in	2 200 mm
Hydraulic reservoir	275 gal	1 040 liters
Fuel capacity	118 gal	445 liters

International Construction Equipment, Inc.
301 Warehouse Drive
Matthews, NC 28104 USA
888-ICE-USA1 / 704-821-8200
sales@iceusa.com / www.iceusa.com

Constant improvement and engineering progress make it necessary that ICE®, Inc reserve the right to make specification changes without notice. Please consult ICE® for the latest available information.

©International Construction Equipment, Inc. All rights reserved. January 2012.

Technical Questions - ACI Concrete Knowledge Center

Limits on free fall of concrete

Q. Is there a maximum acceptable free-fall distance for concrete placement?

A. The American Concrete Institute's two main standards governing building construction, ACI 318-05 and 301-05, don't directly address the issue of free fall of concrete. Other ACI documents currently provide the following information on the free fall of concrete:

Section 5.4.1 of ACI 304R-00, "Guide for Measuring, Mixing, Transporting, and Placing Concrete," cautions:

"Arrange equipment so that the concrete has an unrestricted vertical drop to the point of placement or into the container receiving it. The stream of concrete should not be separated by falling freely over rods, spacers, reinforcement, or other embedded materials. If forms are sufficiently open and clear so that the concrete is not disturbed in a vertical fall into place, direct discharge without the use of hoppers, trunks or chutes is favorable. Concrete should be deposited at or near its final position because it tends to segregate when it has to be flowed laterally into place."

Section 3.5.6 of ACI 336.1-01, "Specification for the Construction of Drilled Piers," cautions:
"Guide placement of free-fall concrete so as not to hit the reinforcement, hole sides, or anchor bolt assemblies. Vibration of concrete free falling more than 20 ft is not required."

In the Specification's Notes to Owner's Representative, ACI 336.1-01 has two other pieces of information:
1. If some pier diameters are less than 30 in. (750 mm), review the Specification and modify. If pier diameters are less than 30 in. (750 mm), certain elements of the Specification can be inappropriate, such as the permitted use of free-fall concrete and any requirements for physical downhole inspection. The risk of free-fall concrete scraping the sides of the shaft while falling increases dramatically as the shaft diameter decreases below 30 in. (750 mm), and physical bottom inspection of pier diameters less than 30 in. (750 mm) is impractical.
2. Specify if free-fall concrete is not permitted or if the free-fall height is limited. Recent research on free-fall concrete has confirmed that free fall does not cause segregation, at least for fall heights up to 60 ft (18 m) and pier diameters as small as 3 ft (1 m) with 10 in. (750 mm) diameter cages. Even accidentally hitting the reinforcing bar cage does not appear to result in measurable segregation (ADSC-FHWA report on "The Effects of Free-Fall Concrete in Drilled Shafts," [1994]); however, hitting the reinforcing bar cage may displace the cage and should be avoided. Thus, free-fall limits may be desirable in small diameter shafts deeper than 60 ft (18 m).

ACI 336.3R-93, "Design and Construction of Drilled Piers," states:
"It is also permissible to allow free fall of concrete as long as it can be directed vertically on the centerline of the shaft, and it does not hit the sides of the shaft or the reinforcement cage."

In the June 2001 issue of ACI's magazine, *Concrete International*, an article by Suprenant cites several references summarizing the effects of free fall. He concludes that free fall of concrete directly over reinforcing bar or at high slumps doesn't cause segregation or reduce compressive strength, but restricting free-fall height does decrease concrete production rates and increase owner costs.

The article may be found at the following link:
http://www.concreteinternational.com/pages/featured_article.asp?ID=10274
ACI members can access this article for free once 'registered' and 'logged in' to the ACI website. Non members can read the abstract and have the option to purchase the article.

To purchase ACI committee documents referenced above, visit the bookstore at:
http://www.concrete.org/bookstorenet/

FAQ posted February 16, 2006.

GSP05/10/20 Sub-Prime® Electric Submersible Pumps

The GSP Sub-Prime line is a selection of portable, electric submersible dewatering pumps available for a wide range of pumping applications on construction, industrial, mining, utility, and municipal job sites. Available in 0.5 hp / 0.4 kW (GSP05), 1 hp / 0.75 kW (GSP10), and 2 hp / 1.5 kW (GSP20) models, the GSP Sub-Prime offers flow rates from 70 through 110 gpm (4.4 through 6.9 l/sec) and maximum heads from 39 to 70 feet (11.9 to 21.3 meters). Compact design allows these versatile units to go where other pumps simply would not fit. An optional piggy back single float switch can be supplied as a cost-effective choice for applications requiring automatic operation.

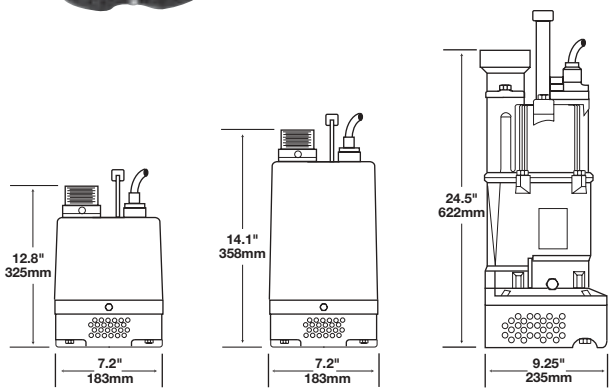

Features

- UL listed & approved *
- Dry running capability without damage
- No control panel required for starting. (Control panel is required for motor protection.)
- Portable, lightweight, durable
- Slim line top discharge design, only 7.2" (183mm) diameter for 0.5 and 1 hp (0.4 and 0.75 kW) models, 9.25" (235mm) diameter for 2 hp (1.5 kW) model
- Non-wicking cable with strain relief
- High-torque, capacitor-start motor
- Motor thermal overload protection
- Outer jacket for continuous cooling of motor
- Silicon Carbide upper and lower mechanical seals
- Triple seals — internal upper & lower mechanical seals and external lip seal
- Torque flow impeller

Specifications

	GSP05	GSP10	GSP20†
HP/kW	0.5 HP/0.4 kW	1.0 HP/.75 kW	2.0 HP/1.5 kW
Max. Flow	70 gpm (4.4 l/sec)	90 gpm (5.7 l/sec)	110 gpm (6.9 l/sec)
Max. Head	39' (11.9M)	60' (18.3M)	70' (21.3M)
Max. Solids	1/3" (9mm)	1/3" (9mm)	1/3" (9mm)
Cable Length	30' (9M)	50' (15M)	50' (15M)
Discharge Size	2" (50mm)	2" (50mm)	3" (75mm)
RPM	3600	3600	3600
Max. Fluid Temp.	90° F (32° C)	90° F (32° C)	104° F (40° C)
PH Range	6.5-8.0	6.5-8.0	6.5-8.0
Voltage	115, 230	115, 230	115/230
Amps	5.8, 3.2	10.3, 5.11	25.9/13.0
Phase	Single	Single	Single
Height	12.8" (325mm)	14.1" (358mm)	24.5" (622mm)
Width	7.2" (183mm)	7.2" (183mm)	9.25" (235mm)
Weight	20 lbs. (9 kg.)	29 lbs. (13 kg.)	61 lbs. (28 kg.)
Max. Sub.	16.5' (5M)	16.5' (5M)	16.5' (5M)

C US

godwin pumps

* n.a. for GSP20
†GSP20 CSA certification pending.

GSP Sub-Prime® Performance Curves

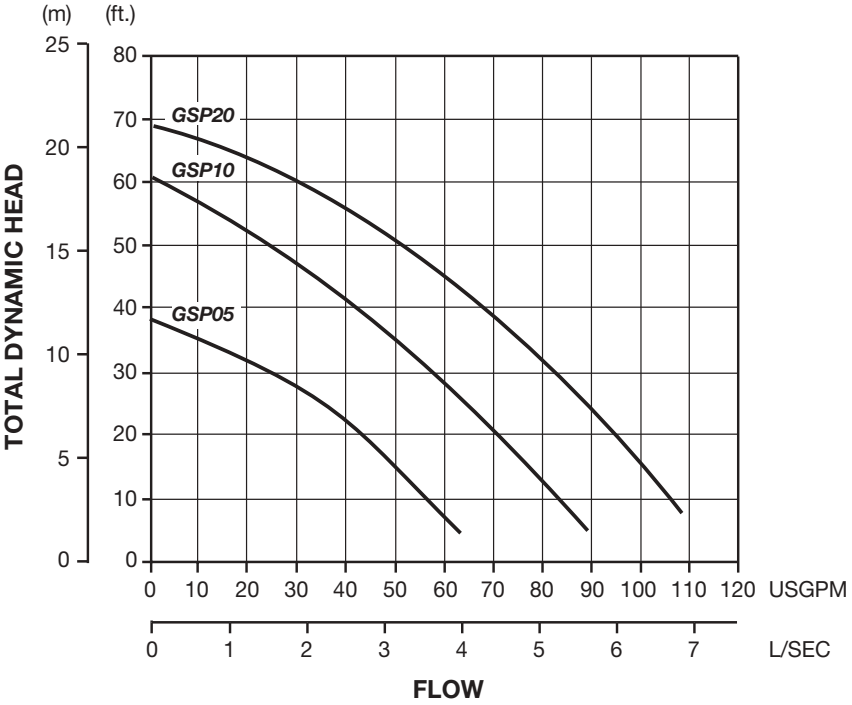

WARNING: Pumps are not designed for use in explosive atmosphere, flammable environments or for pumping volatile liquids.

Design & Construction

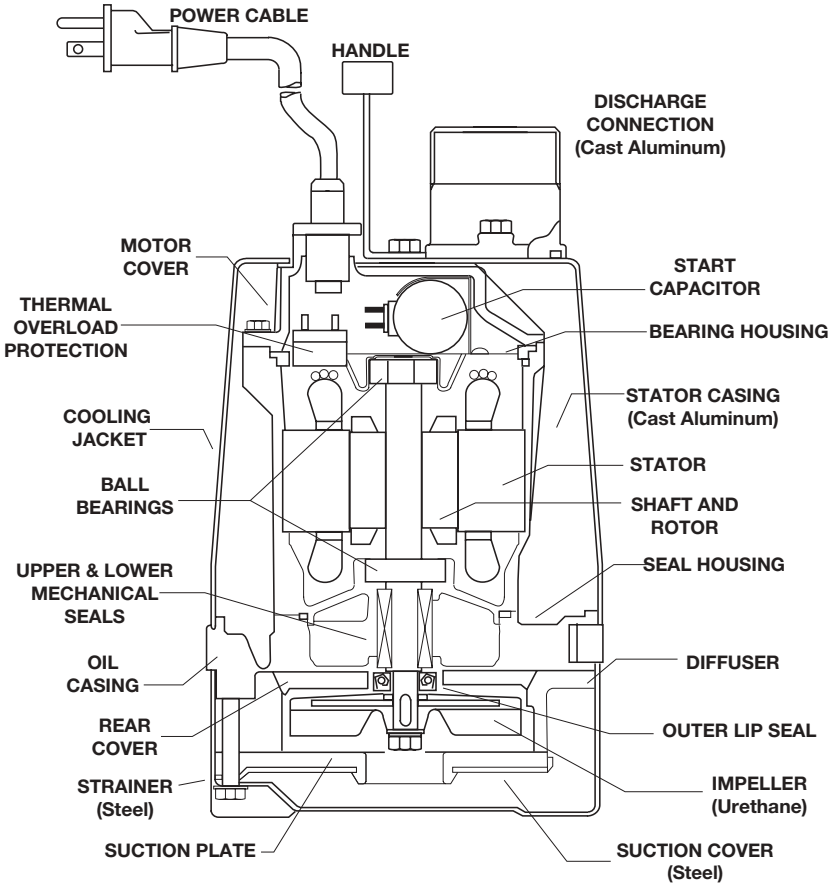

Float Switch

Optional Float Switches available for automatic, remote activation of Sub-Prime pumps. Package consists of 30'/50' (9M/15M) power cord with piggy-back power plug, variable length float tether, and sealed float. Typical configuration shown in the following.

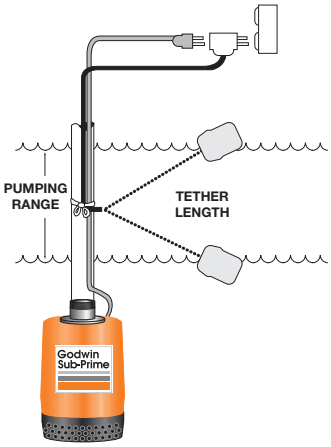

Pumping range determined by tether length according to the following guide.

Tether Length	3.5	5	7	9	11	13	15	(in.)
	89	127	178	229	279	330	381	(mm)
Pumping Range	6.5	7.5	8.5	10	11	12.5	13.5	(in.)
	165	191	216	254	279	318	343	(mm)

Pumping range based on operation in non-turbulent conditions. Actual range may vary due to temperature conditions and cord shape. Tether length increases variance of pumping range.

C US

†GSP20 CSA certification pending.

godwin pumps

One Floodgate Road, Bridgeport, NJ 08014, USA
(856) 467-3636 • Fax: (856) 467-4841

Quenington, Cirencester, Glos., GL7 5BX, UK
+44 (0)1285 750271 • Fax: +44 (0)1285 750352

E-mail: sales@godwinpumps.com
www.godwinpumps.com

BRANCH LOCATIONS:
Connecticut • Pennsylvania • New York • Ohio
Illinois • Maryland • Virginia • West Virginia
Georgia • South Carolina • North Carolina
Florida • Texas • Montana • California • Washington

Sub-Prime® and the color orange for pumps are registered trademarks of Godwin Pumps of America, Inc.
Specifications and illustrations are subject to revision without notice.
© Copyright 2002-2006 Godwin Pumps of America, Inc.

GPASL.021.206

Godwin Wet-Prime

GDP-80HX

GPL-50HX

GWP-25HX

GPP-50HX

GTP-100HX

GWP80-HX

Portable, gasoline-powered Wet-Prime pumps from the people who understand your pumping needs.

godwin pumps®

Think Orange. Think Godwin.

Great Pumps. Great People.

www.godwinpumps.com

Dewatering Pumps

Semi-Trash — *GWP-25HX* *GWP-50HX* *GWP-80HX* *GWP-100HX*

The right pumps for:

- Pumping water with light abrasives & small solids, **semi-trash**
- Construction & industrial dewatering
- Landscaping & irrigation
- Utilities, manholes & vault draining

Discharge Dia. - " (mm)	1 (25)	2 (50)	3 (80)	4 (100)
Solids Handling Dia. - " (mm)	0.2 (5)	0.75 (19)	0.75 (19)	0.75 (19)
Max. Head - ' (m)	106 (32)	95 (29)	85 (26)	92 (28)
Max. Flow - GPM (m^3/h)	30 (6.9)	158 (36)	238 (54)	383 (87)
Power - HP (kW)	1.1 (0.8)	4.0 (3)	5.5 (4.1)	8.0 (5.9)
Fuel Tank Cap. - gal. (l)	0.15 (0.55)	0.66 (2.5)	0.95 (3.6)	1.58 (6)
Weight - lbs. (kg)	12.1 (5.5)	51 (23)	64 (29)	123 (56)

Features & Benefits

GWP-25HX

- Carbon ceramic mechanical seal for increased protection
- Die-cast aluminum volute & impeller
- Lightweight die-cast aluminum pump casing
- High efficiency, four-stroke engine

GWP-50HX, GWP-80HX & GWP-100HX

- **Semi-trash** handling capability
- Abrasion resistant solid silicon carbide mechanical seal for superior durability
- High-grade ductile iron volute & impeller for reduced wear & maintenance
- Removable, lightweight die-cast aluminum pump casing
- Durable, lightweight steel roll cage for added protection & easy maneuvering
- High performance engine with Oil Alert® system & electronic ignition to increase fuel efficiency
- Rubber mounts for reduced vibration

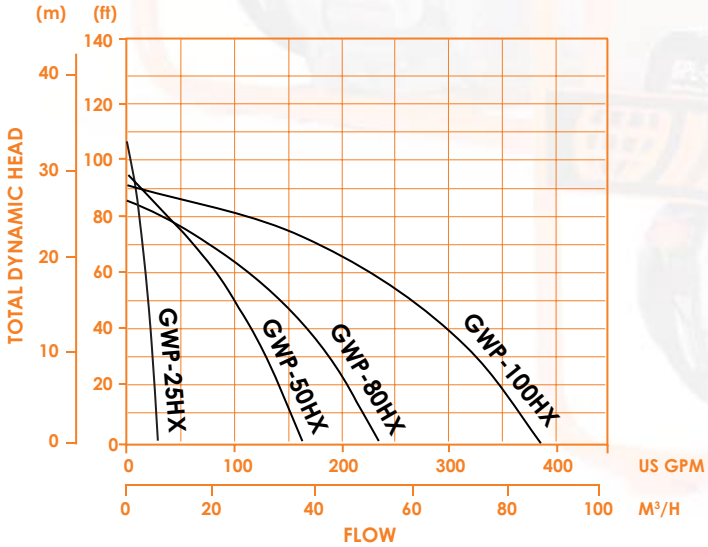

Trash Pumps

GTP-50HX GTP-80HX GTP-100HX

The right pumps for:

- Construction & industrial, trash-laden water
- Stream/pond dewatering
- Septic tanks & manholes
- Pumping water with light abrasives & solids

Discharge Dia. - " (mm)	2 (50)	3 (80)	4 (100)
Solids Handling Dia. - " (mm)	1 (25)	1.5 (38)	2 (50)
Max. Head - ' (m)	98 (30)	89 (27)	82 (25)
Max. Flow - GPM (m^3/h)	185 (42)	354 (80)	425 (96)
Power - HP (kW)	5.5 (4.1)	8.0 (6)	11.0 (8.2)
Fuel Tank Cap. - gal. (l)	0.95 (3.6)	1.58 (6)	1.72 (6.5)
Weight - lbs. (kg)	104 (47)	128 (58)	172 (78)

Features & Benefits

- Solids handling capability
- Abrasion resistant solid silicon carbide mechanical seal for superior durability & protection
- High-grade ductile iron volute & wearplate for reduced wear & maintenance
- Hi-chrome cast iron impeller for reduced wear & maintenance
- Removable, lightweight die-cast aluminum cover & volute for fast debris removal
- Durable, lightweight steel roll cage for added protection & easy maneuvering
- High performance engine with Oil Alert system & electronic ignition to increase fuel efficiency
- Rubber engine mounts for reduced vibration

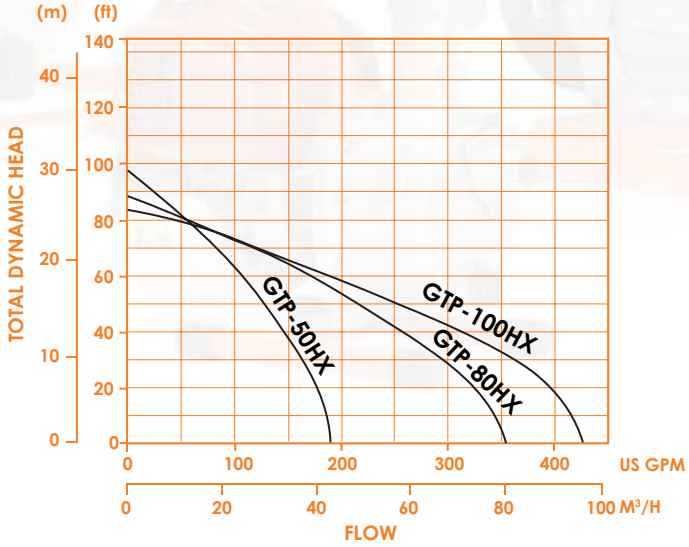

s, manufactures, specifies, services, sells and rents the v

Plastic Pump

GPL-50HX

The right pump for:

- Agricultural chemicals
- General dewatering
- Landscaping
- Irrigation
- Saltwater dewatering
- Swimming pools

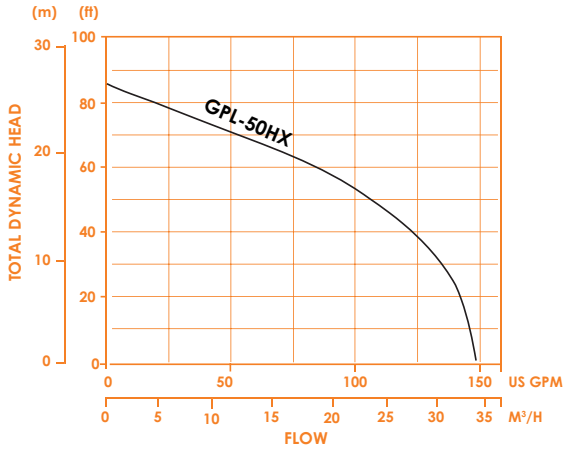

Discharge Dia. - " (mm)	2 (50)
Solids Handling Dia. - " (mm)	0.12 (3)
Max. Head - ' (m)	85 (26)
Max. Flow - GPM (m^3/h)	148 (34)
Power - HP (kW)	4.0 (3.0)
Fuel Tank Cap. - gal. (l)	0.45 (1.7)
Weight - lbs. (kg)	46 (21)

Features & Benefits

- Lightweight, thermoplastic construction resists light chemicals & corrosion
- Carbon ceramic seals with EPDM elastomers for increased protection
- Thermoplastic volute & impeller for increased portability & chemical resistance
- Durable, lightweight steel roll cage for added protection & easy maneuvering
- High performance engine with Oil Alert system & electronic ignition to increase fuel efficiency

Diaphragm Pump

GDP-80HX

The right pump for:

- Construction dewatering
- Mud, sand & sludge
- Utility dewatering
- Limited wellpointing

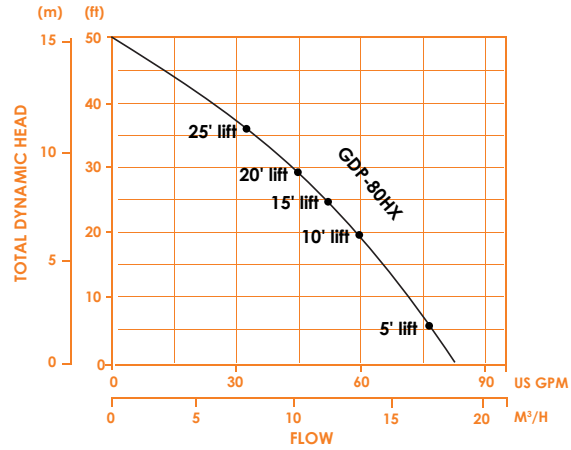

Discharge Dia. - " (mm)	3 (80)
Solids Handling Dia. - " (mm)	2 (50)
Max. Head - ' (m)	50 (15.2)
Max. Flow - GPM (m^3/h)	80 (18)
Power - HP (kW)	5.5 (4.0)
Fuel Tank Cap. - gal. (l)	0.95 (3.6)
Weight - lbs. (kg)	135 (61.2)

Features & Benefits

- Large solids handling capability
- Dry running
- Easy-priming positive displacement design
- Easily replaced neoprene rubber elastomer diaphragm and nitrile (Buna-N) flapper valves
- Portable, lightweight aluminum casing

Pressure Pumps

GPP-50HX GPP-65HX

The right pump for:

- Marine construction
- Remote firefighting
- Landscaping
- Irrigation
- Tank cleaning
- Jetting

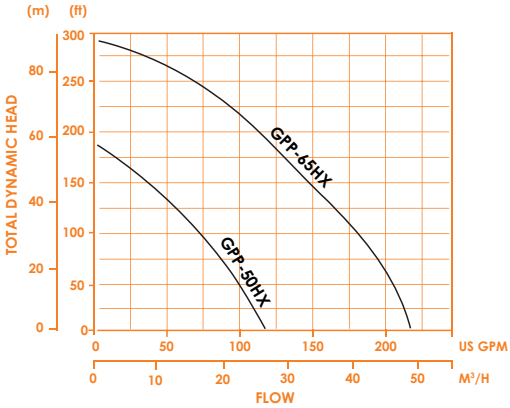

Discharge Dia. - " (mm)	2 (50)	2.5 (65)
Solids Handling Dia. - " (mm)	0.12 (3)	0.375 (9.5)
Max. Head - ' (m)	187 (57)	285 (87)
Max. Flow - GPM (m^3/h)	116 (26)	218 (49)
Power - HP (kW)	5.5 (4.1)	13 (9.7)
Fuel Tank Cap. - gal. (l)	0.95 (3.6)	1.73 (6.5)
Weight - lbs. (kg)	71 (32)	128 (58)

Features & Benefits

- Carbon ceramic seals for increased durability & shaft/seal protection
- GPP-50HX: Cast iron volute & impeller; GPP-65HX: Aluminum volute & impeller
- Durable, lightweight steel roll cage for added protection & easy maneuvering
- High performance engine with Oil Alert system & electronic ignition to increase fuel efficiency
- GPP-65HX features exhaust-driven venturi for automatic priming

Parts & Accessories

Godwin Pumps has built its reputation on reliability. Our parts and service are available to meet your pumping emergencies whenever and wherever they occur.

Our parts inventory includes a full range of replacement parts for each of the pumps we sell. In addition, we stock a variety of suction and discharge hoses and couplings to complete your pumping application needs.

Our service and support include 24/7 on-site service and repair, engineering specialists to tailor pumping solutions specific to your needs and a comprehensive parts and service facility.

Wet-Prime Pumps

Godwin Pumps is pleased to introduce its new line of portable, gasoline-powered Wet-Prime pumps. Available in dewatering, trash, plastic and pressure models with both Honda® and Subaru Robin® engines, Godwin Wet-Prime pumps are capable of maximum heads to 285' and maximum flows to 425 GPM. Ideal for applications including construction dewatering, landscaping and irrigation, farming, remote firefighting and marine construction, the Wet-Prime series is backed by the same dependable parts and service availability as Godwin's Dri-Prime®, Heidra® and Sub-Prime® pumps.

Reliable. Reputable. Responsive.
Think Orange. Think Godwin. Great Pumps. Great People.

godwin pumps

Think Orange. Think Godwin.
Great Pumps. Great People.

Local Distributor:

Home Offices
Bridgeport, NJ • Telephone +1(856) 467-3636
Gloucestershire, England • Telephone +44 (0)1285 750271
www.godwinpumps.com

Dri-Prime, Heidra, Sub-Prime, the color orange for pumps and Godwin Pumps are registered trademarks of Godwin Pumps of America, Inc.
Oil Alert is a registered trademark of American Honda Motor Co.
All other marks belong to their respective owners.
Specifications and photos are subject to change without notice.
© 2006 Godwin Pumps of America, Inc. All rights reserved. GPASL.1006

TIBBAN MFG Inc.
P.O. Box 2675
Apple Valley, CA 92307
(760) 961-1160

TIBBAN MFG INC.

MudPuppy 255-2sc

Recycles the mud & dumps the crud!

Fast & Easy Setup

- No Settling Pit to Dig & Fill
- Save Money With Clean Mud

www.Tibban.com
www.SandGuzzler.com

MudPuppy 255-2sc

Pick Up & Clean 500 GPM

Saves Money

Fast Easy Setup

The MudPuppy sets up in just a few minutes. No settling pit to dig and fill. Only 1000 gallons of water needed to get started.

Clean mud means a clean hole.

The Job Site will be Clean and Dry.

Pump, Drill string, and Swivel all last longer with clean mud.

Mix only the amount of mud needed to drill the hole.

Mud Reservoir "Patent Pending"
1000 gallons Usable
3/16" HR Steel
2 - 4" Suction Outlets
Sloped walls & Sand traps

Never Shovel Sand from this Tank!

Deutz Diesel 74 HP
BF4L2011
Air-Cooled
4 cylinder in-line engine
Fulfills Tier III EPA emissions regulations
Engine Monitor System (safety shutdown) Gauge Panel
Alternator 12 Volt

Shaker
4' x 5' Double Screen - Bottom 10 Mesh top 100 Mesh
Screens mesh should be adjusted as needed
Hydraulic driven w/constant speed control
Rotary Motion 1/4" HR Steel wall construction

Mud Mix Hopper
Vaccuum Jet ventury

TIBBAN MFG Inc.
Apple Valley, CA.

(760) 961-1160
www.Tibban.com
www.SandGuzzler.com

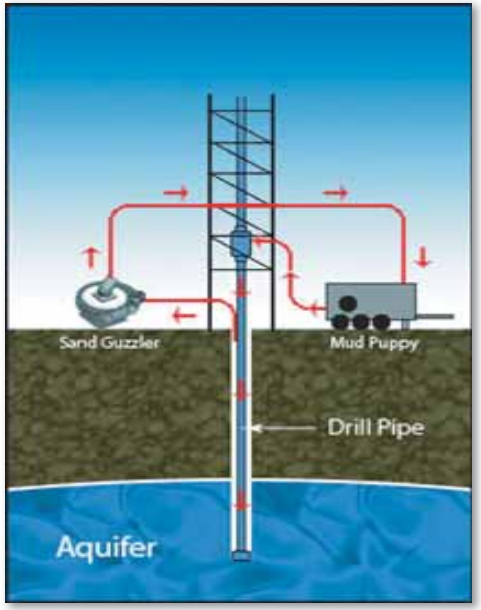

Total Weight
7,000 Pounds
Foot Print 6'6" Wide x 14' Long x 7'6" Tall

Fuel Capacity
25 Gallons Diesel approximately 20 Hours
Run time may vary

Desander System
2"x3"x8.5"x 118 (Centrifugal) Mud Pump
Manifold Pressure Gauge
3-5" Desander Cones 255 GPM
15 Micron Minimum Cut

Sand Guzzler pickup pump (Patented)
12" (Centrifugal) Mud Pump
Can take rocks up to 1-1/2" diameter
Adjustable 0 - 3000 RPM
0 - 500 GPM
20' of 4" Mud Hose

Hydraulics System
Closed Center
Variable Displacement pump
Load sense Control
55 gallon Oil Reservoir
High Capacity Oil Cooling System

T09 & T11

SAND GUZZLER

BY

Tibban MFG. Inc.

SandGuzzler.com

Read Completely before operating the Sand Guzzler Pump.

Installation:

Connect the hydraulic hoses so as to make the impeller rotate in a clockwise rotation as viewed from the top of the pump.

- Dig a ditch from the well being drilled to a small pit just outside the bore hole. Set the Sand Guzzler in the pit deep enough for the mud to cover the hydraulic motor.
- The mud in the pit will rise and fall during normal operation. The speed should be adjusted so as to make the pump run about 100 RPM faster than needed to pump all the drilling fluid.
- The Sand Guzzler can run dry. There are no seals or bearings in the mud. The air will discharge from the SAND GUZZLER automatically while operating.
- *Caution: Keeps hands away from the impeller. Serious injury or death can occur.*

Hydraulic Hoses:

The case will drain through the discharge side of the motor. The motor can be reversed momentarily when needed to clear a rock or clog.
If the return line pressure exceeds 350 psi, the shaft seal will be pushed out and will leak oil. Use a case drain if more than 350 psi. The SAND GUZZLER pump will run best at about 2200 RPM 15-20 gpm. The faster the pump turns the faster the housing will wear. The SAND GUZZLER can be run as fast as 3000 RPM and will take up to 3000 psi. Do not over pressure the motor. The motor will slow if damaged from over pressure.

Hydraulic Motor:

Tibban Part #: SG001001
Max. RPM 3000
Max. PSI: 3000
20 GPM @ 3000 RPM
15 GPM @ 2300 RPM
7.8 GPM @ 1200 RPM

15064 Anacapa Rd
Victorville, CA 92392
760/961-1160 Office
760/961-1126 Fax
Info@Tibban.com

PRODUCT DATA SHEET
April, 2008

EZ CLEAN FIXED AXLE OPEN ACCESS TANK

GENERAL INFORMATION

This fixed axle tank is designed to provide easy viewing of the contents. Very economical tank for smaller jobs or where space is a premium. Smooth interior walls for easy cleaning.

WEIGHTS AND MEASURES

» Capacity:	480 BBL (20,160 gal.)
» Height:	11′-4″ (grade to top rim) 14′-10″ (grade to top of upright guardrails)
» Width:	8′-6″ (between side runners)
» Length:	39′-11″ (front nose to outside of rear stairway) 37′-6″ (tank only)
» Weight:	22,860 lbs.

STRUCTURAL DESIGN

» Floor:	¼″thick ASTM A36 carbon steel (V-bottom)
» Sides/Ends:	¼″ thick ASTM A36 carbon steel
» Top Catwalk:	1″ deep bar grating
» Wall Frame:	3/16″x3″x5″ ASTM A36 formed channel
» Top Rim:	4″x4″ structural tubing
» Skid Rails:	C8x11.5 structural channel

FEATURES

» Valves:	1-Front &1-Rear: 6″- wafer butterfly valve. Cast iron body, Buna-N seat & seals, 316 SS stem, Nylon 11 coated ductile iron disk w/ plug and chain.
» Relief Valve:	None (open top)
» Side Manway:	One on curb side of tank; 20″ diameter.

FEATURES – cont.

» Front Piping Connections:	Bottom Drain: 6″-150# flanged nozzle and butterfly valve Inlet/Outlet: 2 - 4″-150# raised face flange with blind flange (chained) Thermowell: 1 – 2″ 150# blind flanged connection Adjustable Discharge: 1 – 6″ 150# blind flanged nozzle
» Rear Piping Connections:	Bottom Drain: 6″-150# flanged nozzle and butterfly valve Inlet/Outlet: 2 - 4″-150# raised face flange with blind flange (chained) Adjustable Discharge: 1 – 6″ 150# blind flanged nozzle
» Interior Access:	One internal ladder from middle catwalk
» Manway Seal:	Buna N gasket
» Catwalk Access Stairway:	Rear mounted – lower section folds up for transport and down for use. Stairway includes handrails.
» Guardrails:	Top deck, fold-down, 1¼″ x 1¼″ square tubing.
» Level Indication:	None
» Axle:	77½ track straight, non steer, 22,500# capacity.
» Suspension:	Silent Drive, 3 air-bags with manual release.

SURFACE DETAILS

» Exterior Coating:	High Gloss Polyurethane
» Interior Coating:	Chemical resistant lining

TESTS/CERTIFICATIONS

» Tests Performed:	Major repairs – hydrotest Scheduled- Level I, II and III inspections

Side View

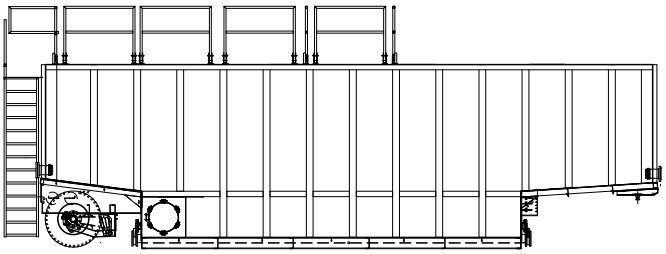

Front View

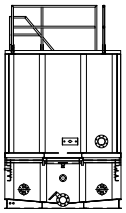

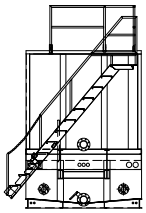

Rear View

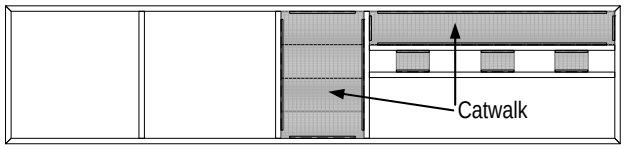

Top View

To the best of our knowledge the technical data contained herein are true and accurate at the date of issuance and are subject to change without prior notice. No guarantee of accuracy is given or implied because variations can and do exist. NO WARRANTY OR GUARANTEE OF ANY KIND IS MADE BY BAKERCORP, EITHER EXPRESSED OR IMPLIED.

3020 OLD RANCH PARKWAY • SUITE 220 • SEAL BEACH, CA • 562-430-6262

PLAN VIEW -CATWALK NOT SHOWN / GUARDRAILS DOWN

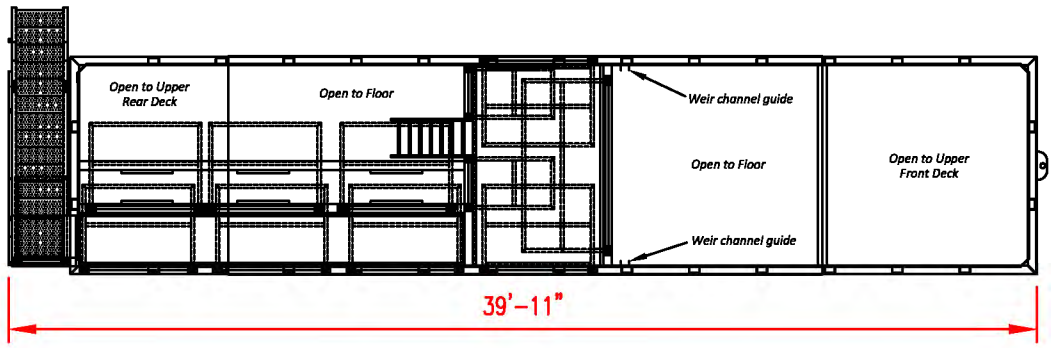

PLAN VIEW -CATWALK SHOWN/GUARDRAILS NOT SHOWN

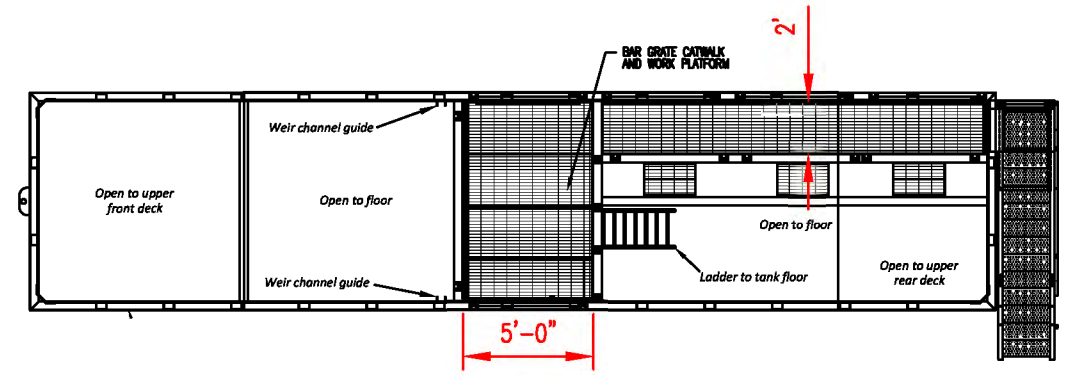

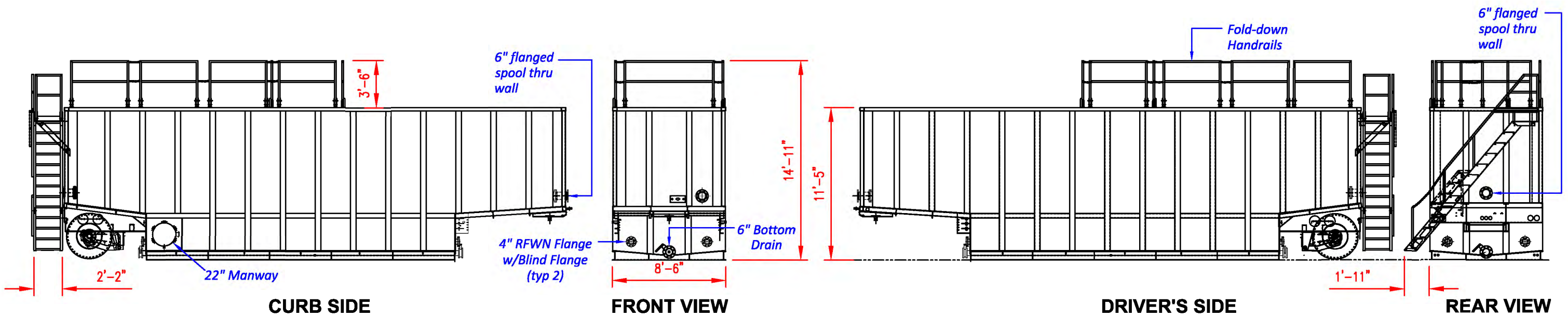

SPECIFICATIONS:

1) Tank Capacity: 20,160 gallons (480 BBL)
2) Tank Weight: 22,860 lbs. (empty)
3) Tank is constructed of A36 carbon steel

NOTES:

1. This drawing is a baseline representation for this model of tank. Variations between this drawing and the actual equipment in the field can and do exist, primarily with appurtenance locations, sizes and quantities. Consult your local BakerCorp representative if specific needs exist.
2. THIS TANK IS *NOT DESIGNED FOR TRANSPORTING LIQUIDS*. It should be moved only when empty.
3. Tanks of this type have an internal lining (coating) on the wetted surfaces.

The information contained herein is proprietary to BakerCorp and shall not be reproduced or disclosed in whole or in part, or used for any design or manufacture except when user obtains direct written authorization from BakerCorp.

–

3020 OLD RANCH PARKWAY
SEAL BEACH, CA 90740-2751

REV.	DESCRIPTION	DATE	BY
G			
F			
E			
D			
C			
B			
A			

SCALE: Do Not Scale	SIZE B	ORIGINAL DWG. DATE 30SEP08
DRAWN BY: P.J.B.	APPROVED BY: –	CAT/CLASS ––
TITLE EZ CLEAN FIXED AXLE OPEN ACCESS VERSION		SHEET 1 OF 1
DRAWING NO. S-2-M0019-1-		REV. 0

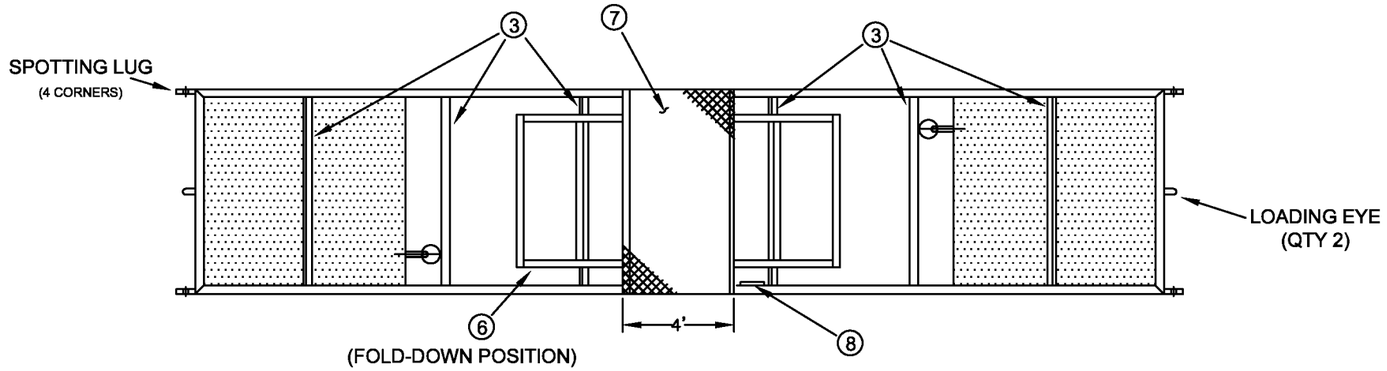

TOP VIEW

ITEM	QTY	DESCRIPTION
1	1	4" Butterfly Valve (see note 1)
2	1	6" Butterfly Valve (see note 1)
3	20	Internal Crossties
4	2	Sump Draw
5	2	4" Diameter Capped Nipple (see note 1)
6	2	Catwalk Handrail (foldable)
7	1	Expanded Metal Catwalk
8	1	Internal Ladder

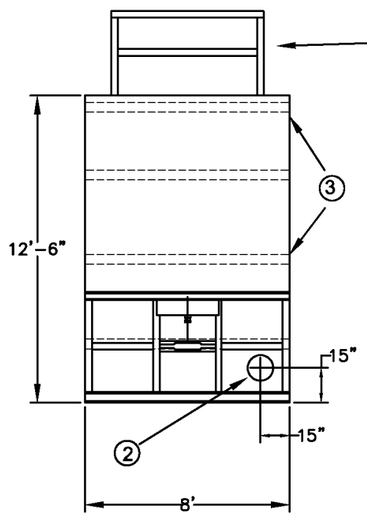

DOLLY END

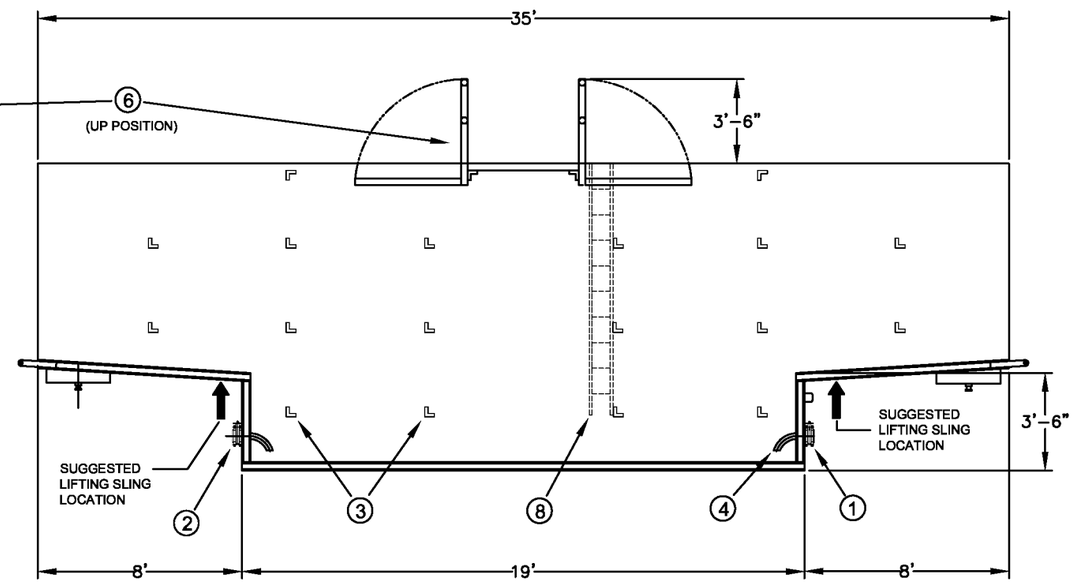

SIDE VIEW

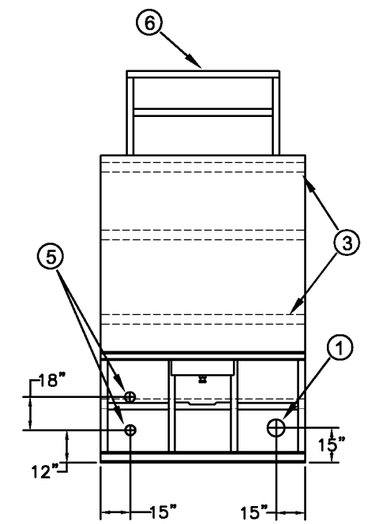

TRACTOR END

SPECIFICATIONS:

1) TANK CAPACITY: 500 BBL/21,000 GAL.
2) TANK WEIGHT: 18,000–19,000 LB.
3) MAT'L OF CONSTRUCTION: A36 CARBON STEEL.

NOTES:

1. THIS DRAWING IS A BASELINE REPRESENTATION FOR THIS MODEL TANK. VARIATIONS BETWEEN THE DRAWING AND THE ACTUAL EQUIPMENT IN THE FIELD CAN AND DO EXIST, PRIMARILY WITH APPURTENANCE LOCATIONS, SIZES AND QUANTITIES. CONSULT YOUR LOCAL BAKER REPRESENTATIVE IF SPECIFIC NEEDS EXIST.
2. REMOVABLE EXTERNAL LADDER (NOT SHOWN) REQUIRED TO ACCESS CATWALK.

The information contained herein is proprietary to Baker Tanks and shall not be reproduced or disclosed in whole or in part, or used for any design or manufacture except when user obtains direct written authorization from Baker Tanks.

BAKER TANKS
3020 OLD RANCH PARKWAY
SEAL BEACH, CA 90740–2751

REV.	DESCRIPTION	DATE	BY
G			
F			
E			
D			
C			
B	Added Hidden lines	7/12/05	Z.E.R
A	Misc Dim Revs	2/2/05	P.J.B.

SCALE: None	SIZE B	ORIGINAL DWG. DATE 27FEB02
DRAWN BY: A. R.	APPROVED BY: –	CAT/CLASS 100–0XXX
TITLE OPEN TOP TANK		SHEET 1 OF 1
DRAWING NO. S–1–M0001–1–		REV. B

ChemMasters

Installation Guidelines

CreteLox is a non-reemulsifiable, acrylic latex bonding agent and admixture. This high performance polymer is formulated as a bonding agent for cementitious mortars and toppings and as an admixture to site mixed or prepackaged cement based mortars.

1.0 General

1.1 Scope
This specification covers the performance characteristics and application procedures for providing a non-reemulsifiable, acrylic latex bonding agent and admixture. This high performance polymer is formulated as a bonding agent for cementitious mortars and toppings and as an admixture to site mixed or prepackaged cement based mortars.

1.2 Material Description
The material shall be a non-reemulsifiable, acrylic latex bonding agent and admixture that forms a permanent, positive chemical and mechanical bond to sound surfaces which may be used alone or as a slurry bond coat. As an admixture, it should increase abrasion and impact resistance with early and ultimate flexural, tensile and compressive strengths, improve chemical resistance to fertilizers, acids, and alkalies, and significantly prohibit chloride ion penetration increasing corrosion resistance of reinforcing steel.

1.3 Typical Applications
A. Interior or exterior, above or below grade bonding agent
B. Performance enhancing admixture for stucco, cement plaster, cementitious toppings and overlays, prepackaged and site mixed mortars
C. Cyclically damp environments, food processing plants, water storage facilities, swimming pools
D. Polymer modified concrete ((PMC) for bridge decks and white toppings

1.4 Limitations
A. Do not use air entraining admixtures or cements or other admixtures.
B. Do not apply when the surface or air temperature is, or is expected to go, below 45° F./6° C. Do not apply to frozen or frost filled surfaces.
C. Overworking or over trowelling surface may cause blisters or delaminations.
D. Do not seal surface with solvent based products. Organic solvents of high solvency power, xylene, toluene, lacquer thinner, etc., will soften surface if spills are not removed quickly.

1.5 Quality Assurance
The repair contractor shall have experience and proficiency specific to the repair type and shall be approved by the engineer and the material supplier. The material supplier shall provide job service as required to assure proper handling and installation of materials. The field representative shall instruct as needed to assure that handling, mixing, placing and finishing of materials are in accordance with specifications.

1.6 Delivery, Storage and Handling
The product shall be delivered in the original, unopened containers. It shall be labeled with the manufacturer's name, product name and lot number. Materials should be stored at the job site under dry conditions and at a temperature of 40° F., (4° C.) to 90° F. (32° C.).

1.7 Environmental Requirements
All materials used for the repair work shall be VOC compliant. The manufacturer shall supply the appropriate material safety data sheets upon request.

1.8 Site Conditions
A. Coverage is dependent upon surface texture and porosity.

2.0 Materials

2.1 Approved Materials and Manufacturers

2.1.1 Product Standard
CreteLox, as manufactured by ChemMasters, 300 Edwards Street, Madison, Ohio, 44057-3112, 1-800-486-7866, is considered to conform to the requirements of this specification and shall be the bonding agent or admixture used. Cretelox is a non-reemulsifiable, acrylic latex bonding agent and admixture. This high performance polymer is formulated as a bonding agent for cementitious mortars and toppings and as an admixture to site mixed or prepackaged cement based mortars.

2.1.2 Substitutions
No submittals for substitutions will be accepted after the bid date. All submittals must be made in writing to the engineer with supporting technical data sheets and test data showing complete equivalent performance.

2.2 Packaging/Coverage/Estimating

2.2.1 Packaging

Cretelox is packaged in 55 U.S. gallon /208 Liter drums and 5 gallon/18.9 Liter pails, shipped 36 pails per pallet, shrink wrapped and in 1 gallon/3.8 liter plastic jugs, packed 4 per case.

2.2.2 Estimating and Coverage
Coverage is affected by texture or porosity of substrate.
Ft.^{2}/gallon M^2/Liter
A. Bonding Agent 200-250 5-6
B. Slurry Bond Coat 400-500 10-12
C. Admixture normally 30% to 50% of standard water requirement

2.3 Storage:
Store tightly sealed containers at room temperature. Keep from freezing. If Cretelox freezes, allow it to thaw normally at room temperature. Shelf life of properly stored material is one year from date of manufacture.

2.4 Engineering Properties
Physical Properties of Modified Portland Cement Mortar

2.4.2.1 Hardness Properties
Test Method % Improvement Curing Method: Moist Dry

2.4.1.1 Shear Bond Strength (ASTM C-1042): 389%1600%

2.4.1.2 Flexural Strength (ASTM C-348) 127% 222%

2.4.1.3 Tensile Strength (ASTM C-190) 21% 215%

2.4.1.4 Tensile Strength (ASTM C-190) 121% 215%

2.4.1.5 Compressive Strength (ASTM C-109) 94% 228%

2.4.1.6 Abrasion Resistance Taber: 298% 1400%
Comparisons are 3:1 sand/cement mortar cured 28 days.
Cretelox modified mortar was dry cured.

2.5 Accessory Materials as manufactured by ChemMasters, 300 Edwards Street, Madison, Ohio, 44057-3112, 1-800-486-7866, is considered to conform to the requirements of this specification.

3.0 Execution

3.1 References

A. Meets the requirements of ASTM C-1059, Type II, Standard Specification for Latex Agents for Bonding Fresh to Hardened Concrete when tested in accordance with ASTM C-1042.
B. Refer to ChemMasters MSDS and Technical Data Sheets

3.2 Surface Preparation:
Substrate to be repaired or topped must be clean and free of all dust, dirt, oil, grease, curing or sealing compounds or other contaminants that may interfere with proper adhesion. If ambient temperatures are above freezing, saturate prepared surface with water. Remove any puddles.

3.2 Mixing:
A. Mixing Cretelox before using. If Cretelox is to be diluted for use as an admixture, blend Cretelox with water then add dry mix.
B. Slurry bond coat requires: 2 gal./7.6 L water 2 gal./7.6 L Cretelox
94 lb. 42.6 Kg cement 50 lb./22.7 Kg sand or 50% water/50% Cretelox and measured amount of dry, packaged mortar to achieve batter consistency
C. As admixture in packaged or site mix mortars, use Cretelox to replace 50% to 100%of the normal water required.
D. Cement based masonry coatings or other thin mortars and toppings may be mixed with Cretelox alone for optimum adhesion and durability.
E. Do not mix more material than can be placed in 20 minutes. Do not over mix as this results in excessive air entrainment and loss of strength. Particular care should be taken when power mixing, 1-2 minutes maximum.

3.3 Bonding Agent Application: Apply Cretelox at a rate of 200-250 $Ft.^2$ per gallon/5-6 M^2 per liter with a garden type sprayer or solvent resistant roller. Place fresh concrete or mortar while Cretelox is wet.

3.4 Bonding Slurry Application: (Preferred method) Slurry should have the consistency of pancake batter. Apply to substrate with a stiff bristle brush, working bond coat into voids, cracks and corners. Place repair mortar or topping while slurry is wet or damp.

3.5 Horizontal Repairs: Replace 50%of the normal water with Cretelox. Mix and place as usual. Over working or over trowelling surface may cause blisters or peeling.

3.6 Vertical and Overhead Repairs: Replace 50%-75% of the normal water with Cretelox. Place as usual. Best results are obtained if repairs are made in 0.5 inch/1.25 cm lifts. A stiff mix is easier to place.

3.7 Cement Plaster Ceilings: Use Cretelox alone. Build up in thin coats of .25 inch/.62 cm but do not exceed 0.5 inch/1.25 cm in depth.

3.8 Curing:

A. Cretelox modified concrete and mortar is self curing under normal conditions. Do not use curing compounds on Cretelox modified mortars or toppings. In extremely hot, dry or windy environments, keep repair area damp with wet burlap for 24 hours.

B. Cretelox requires at least 3 consecutive days of normal drying conditions during the curing cycle. If Cretelox is used in damp or confined areas, supplemental ventilation may be necessary to facilitate full curing and drying.

DRILLING AND MIXING GUIDE

USE OF SHORE PAC® POLYMER SLURRY

IN SLURRY-DISPLACED FOUNDATION CONSTRUCTION

INTRODUCTION

This specification provides direction in the proper use of SHORE PAC® and its additives while improving standardization, quality, and performance in the practice of slurry-displaced deep foundation construction. This document ensures that engineers and engineering geologists can confidently predict the load carrying capacity of the piling being constructed using an approved slurry, and to ensure that an approved slurry is not detrimental to the structural capacity or service life of the piling.

ADVANTAGES

The advantages of using high performance polymer slurry over mineral slurry yield multiple benefits, which improve construction economics in many ways. SHORE PAC saves time and money while improving construction quality and reducing defects.

- Controls fluid loss in sands and gravels. Stabilizes excavations
- Highly concentrated. Very small quantities required
- Improves productivity of machines and crews
- Reduces chipping and cleaning of poured concrete
- Reduces or eliminates disposal costs. Product is environmentally safe
- Reduces transport costs and storage space requirements
- Requires less mixing/processing equipment, reducing capital investment, jobsite congestion, and fuel costs

SCOPE

This specification covers the use of polymer stabilizing support fluids ("slurry") based on SHORE PAC, an easy mixing, water-soluble, polymer supplied as a free-flowing granular material. SHORE PAC earth-reinforcing fluid is designed for use in the construction of bored piles by the slurry-displacement method.

SELECTION OF POLYMER SLURRY MATERIALS

The principal polymer is SHORE PAC, manufactured by CETCO. Additives which have been certified by the manufacturer (CETCO) may be used with approval of the engineer and in accordance with the manufacturer's recommendations. The strict quality control guidelines set forth by the California Department of Transportation (CALTRANS) requirements for approval of SHORE PAC polymer drilling slurry have been applied to ensure the use of proven materials and techniques.

SHORE PAC POLYMER DOSAGE AND VISCOSITY

SHORE PAC is an easy mixing, water-soluble, polymer supplied as a granular material. SHORE PAC is designed for preparation of viscous earth-reinforcing fluids or slurries for a variety of drilling, trenching, and walling applications in the geo-construction industry.

1. Pre-treat make-up water with SODA ASH 6 lbs per 1,000 gallons make-up water for a pH of 8-10. Pre-treat make-up water with DE-CHLOR 0.5 lb per 1,000 gallons mix water.
2. Add SHORE PAC through a Venturi type mixer at 3.4-10.0 lbs per 1,000 gallons depending on desired viscosity if mixing in surface tank, if mixing directly within excavation sprinkle into stream of water slowly.
3. Take a Marsh Funnel Viscosity reading. Viscosity should be 35-125 sec/qt.

SHORE PAC dosage and the viscosity of the slurry shall be selected and controlled within ranges which suit the soil and mix water conditions of the work and according to table 3.1.

Table 3.1

FORMATION TYPE	SHORE PAC DOSAGE OR CONCENTRATION			MARSH FUNNEL VISCOSITY
	Lbs/yd^3	Lbs/1,000 gals	Kg/m^3	Sec/qt
Clay & Shale	0.7 – 0.8	3.4 - 4.0	0.4 - 0.5	35 - 50
Silt & Fine to Med. Sand	0.8 - 1.0	4.0 - 5.0	0.5 - 0.6	45 - 55
Coarse Sand to Pea Gravel	1.2 - 1.5	6.0 - 8.0	0.7 - 0.9	60 - 75
Gravel to Cobble	1.7 - 2.4	9.0 - 12.0	1.0 - 1.3	80 - 125

2870 Forbs Avenue, Hoffman Estates, IL 60192
847.851.1800 | 800.527.9948 | cetco.com/dpg

IMPORTANT: The information contained herein supersedes all previous versions, and is believed to be accurate and reliable. For the most up-to-date information, please visit cetco.com/dpg. CETCO accepts no responsibility for the results obtained through the application of this information. All weights are approximate. CETCO reserves the right to update information without notice. REV 8/12

© 2012 CETCO

USE OF SHORE PAC® POLYMER SLURRY

IN SLURRY-DISPLACED FOUNDATION CONSTRUCTION

MAKE-UP WATER AND EFFICIENT SLURRY PRODUCTION

Sufficient water supply of proper quality for slurry make-up water shall always be available to support planned operations and unknown contingencies. Slurry mixing capability shall be immediately and continuously available to support planned operations and unexpected events. If the water supply is from a low-rate or irregular source such as a small well, a small diameter supply line, or tanker truck, a tank for storage of water shall be used to guarantee adequate and uninterrupted slurry making capacity.

SODA ASH should be used to adjust the pH and treat out calcium (Ca) and magnesium (Mg) contaminants that are detrimental to polymers. SODA ASH will adjust the pH of the mix water to between 8 and 10, which is optimum for SHORE PAC performance. The ratio of SODA ASH to water is 6 lbs per 1,000 gallons of water.

The additive DE-CHLOR is used to treat out chlorine (Cl) if municipal water is used for make-up water. Chlorine, present in municipal water, destroys all polymer molecules and decreases its viscosity if chlorine registers greater than 3 ppm. DE-CHLOR is a cost effective white granular crystal that neutralizes chlorine in municipal water and is environmentally safe. The ratio of DE-CHLOR to water is 0.5 lb per 1,000 gallons of mix water.

CONTAMINATES

Polymer slurries are sensitive to various contaminants, which occur in groundwater, soil, cement, and make-up water. Petroleum hydrocarbons, calcium, acidity, alkalinity, chlorine, and sodium chloride are some contaminants that will affect the polymer slurry. These contaminants are often introduced into the slurry from the soil, groundwater, and/or industrial wastes at the construction site. There is a need to identify and correct these problems for a smooth operation to take place. This begins with geotechnical engineers in the site investigation process. Identification and documentation should be present with soil logs and passed onto the general contractor and subcontractors. The procurement of samples of groundwater and the analysis of such samples for pH and contaminants should become a standard part of subsoil investigations conducted by geotechnical drilling service firms or by your own investigation. When contamination is present or buffering is required, additives shall be used in accordance with manufacturer's recommendations.

MIXING SHORE PAC

SHORE PAC polymer may be mixed pre-mixed in surface vessels or mixed directly within the excavation. The mix water or the prepared fluid shall be treated with appropriate additives as specified by the manufacturer.

MIXING DIRECTLY IN EXCAVATION

When mixing directly in the excavation it is important to have a steady stream of water that is positioned to provide a point of rapid and wide water flow for introduction of the polymer by sprinkling or sifting. Mixing of fresh polymer shall be completed by sprinkling or sifting the polymer carefully onto a flowing stream of water or fluid from a pressurized source directed into the excavation, such that the flowing fluid catches, wets, and separates the polymer grains so that they disperse and hydrate as individual particles, avoiding the forming of lumps or balls of un-mixed polymer. Dry polymer shall not be added directly onto the fluid in the excavation (as opposed to being added on a flowing stream) because this normally produces lumps or "fisheyes." The additive ACCU-VIS will create instant viscosity with out having to shear.

When a new polymer mix is being prepared in a hole that has been dug or drilled to significant depth before adding slurry, the excavation shall be filled with water to a water column height (measured from bottom of excavation) of no less than two meters or 15% of excavation depth, whichever is the greater, before beginning to add the polymer. SHORE PAC dry granular polymer shall be added at a controlled rate on the stream of water that is filling the hole in order to avoid lumps and fisheyes. The excavating tool (auger, bucket, clamshell) shall be reciprocated gently the full length of the slurry column while the polymer is being added, to distribute and even out the fresh polymer, and to ensure that none of the polymer settles to the bottom of the excavation during the mixing and thickening process.

When adding fresh dry polymer to recycled fluid directly in the excavation, special care must be taken to ensure good dispersion of the polymer grains to avoid forming lumps. This is because the polymer wets-out and disperses more slowly in thickened fluid than in plain water. Fanning the recycled fluid across an auger or other object to provide a point of wide and rapid flow facilitates the adding of fresh dry polymer.

MIXING IN VESSELS OR TANKS

When SHORE PAC polymer is pre-mixed in vessels it shall be added to water that is being passed through a hose, tube or hopper, across a stationary panel or surface, or stirred or otherwise agitated, in a manner which avoids the formation of lumps and results in a uniform mixture of polymer in the water. The polymer slurry shall be agitated until it develops viscosity adequate to be self-suspending (i.e., particles of partially-dissolved polymer do not settle in the fluid). This normally occurs within 15 to 30 minutes. Polymer shall not be mixed in a vessel without adequate agitation. Agitation may be accomplished by use of motorized stirrers, air injection, (as with blowpipes or fixed perforated piping), or other suitable and effective means. Recirculation by a single pump (without other means of agitation) is usually inadequate and shall not be permitted unless the mix tank is small enough that the pump provides adequate agitation of the entire tank.

2870 Forbs Avenue, Hoffman Estates, IL 60192
847.851.1800 | 800.527.9948 | cetco.com/dpg

IMPORTANT: The information contained herein supersedes all previous versions, and is believed to be accurate and reliable. For the most up-to-date information, please visit cetco.com/dpg. CETCO accepts no responsibility for the results obtained through the application of this information. All weights are approximate. CETCO reserves the right to update information without notice. REV 9/11

© 2011 CETCO

USE OF SHORE PAC® POLYMER SLURRY

IN SLURRY-DISPLACED FOUNDATION CONSTRUCTION

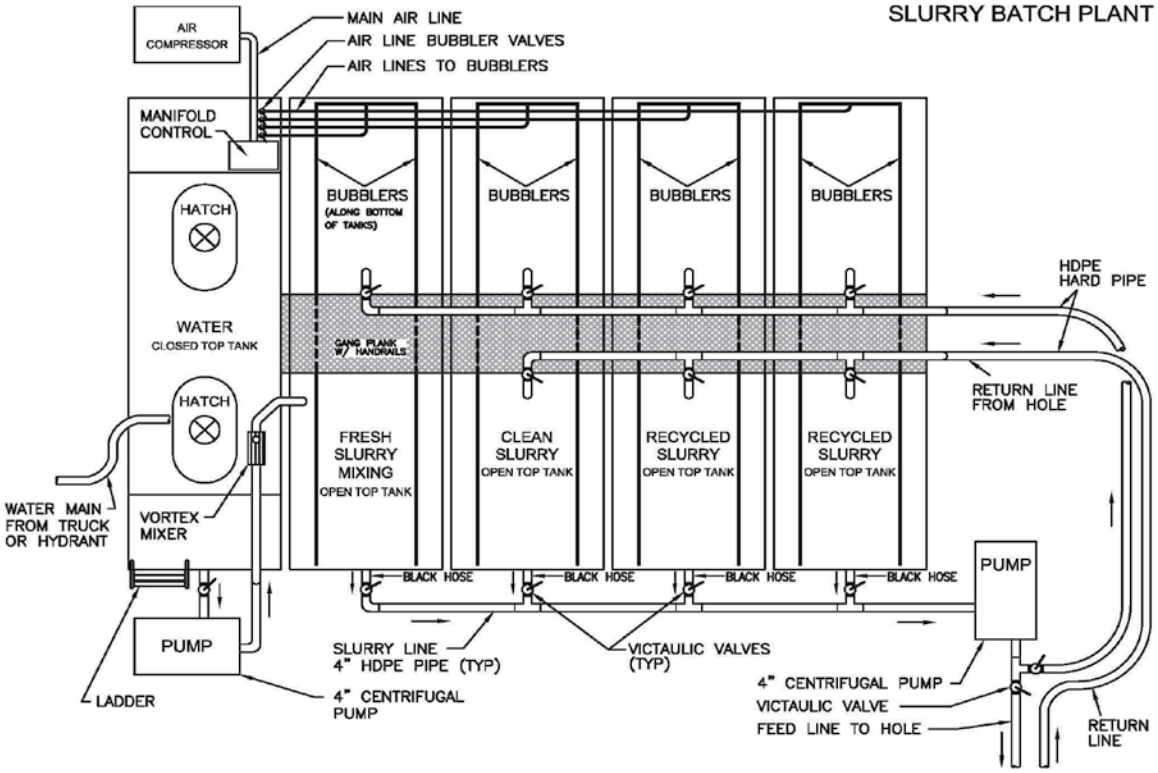

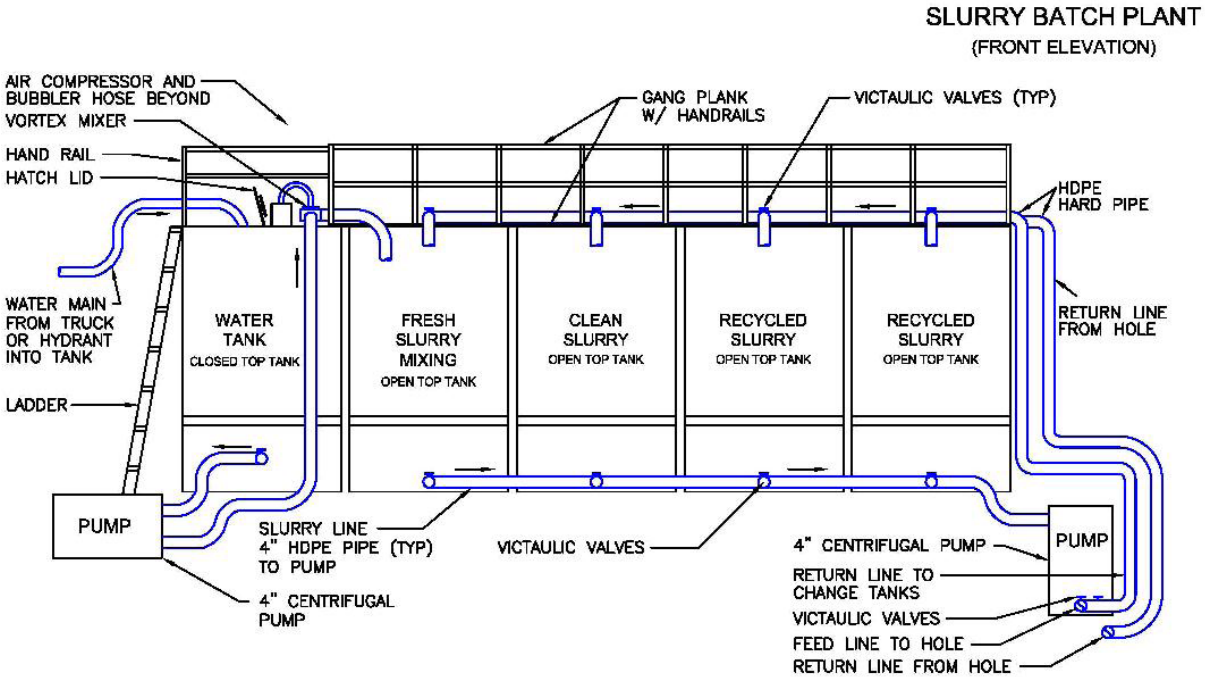

2870 Forbs Avenue, Hoffman Estates, IL 60192
847.851.1800 | 800.527.9948 | cetco.com/dpg

IMPORTANT: The information contained herein supersedes all previous versions, and is believed to be accurate and reliable. For the most up-to-date information, please visit cetco.com/dpg. CETCO accepts no responsibility for the results obtained through the application of this information. All weights are approximate. CETCO reserves the right to update information without notice. REV 9/11

© 2011 CETCO

USE OF SHORE PAC® POLYMER SLURRY

IN SLURRY-DISPLACED FOUNDATION CONSTRUCTION

ADDITIVES

CETCO has developed a complete line of additives as companion products for SHORE PAC when problem conditions arise. Additives shall be used in accordance with recommendations listed in the table to the right. Control guidelines for use of these additives shall be pH, chlorine levels, contaminant levels, fluid behavior, and other parameters as specified by manufacturer.

This system based on the SHORE PAC polymer and specialized additives, has a track record of delivering the highest levels of performance and project economy of any slurry technology on the market including bentonite.

With this system you can stabilize the most challenging of formation conditions, cohesion-less sands, open corals, cobbles, etc., thereby eliminating collapses and controlling fluid loss. This results in reducing concrete over-breaks, saving on the quantity of concrete consumed, polymer consumed, and the time required for drilling while providing the highest levels of skin friction and rebar bonding available with a slurry system.

MAINTENANCE

The slurry level shall be maintained at least 1.8 meters (six feet) above the water table, or as such higher level that is required to overbalance hydrostatic soil pore pressure and maintain soil stability. If the slurry drops below the specified level, the operation shall be paused and the proper slurry level re-established before proceeding. In some situations the manufacturer may recommend that the slurry be maintained at less than 1.8 meters (six feet) above the water table, to reduce rates of fluid loss if soil stability is being maintained.

The point of reference for selection and maintenance of slurry level shall always be the water table (piezometric level). This applies even in situations where casing or other protective sleeve has been placed to a depth at or below the water table. The presence of casing does not remove the requirement to keep the slurry level above the water table. Attempts to excavate or hold open an excavation in saturated or unstable soils with inadequate slurry head pressure; even with casing extended into the water table, can be expected to result in soil collapse below the casing.

SAMPLING AND TESTING

Samples of the slurry shall be taken from near-bottom of the excavation, from the upper portion of the excavation, and from the slurry supply tanks (if applicable) at regular intervals during the excavating process in order to facilitate control of slurry properties.

PRODUCT	RECOMMENDED DOSAGE RATE	DESCRIPTION	FUNCTION
ACCU-VIS	Add 2-3 gals in weighted sealed plastic bag to desired area. Break open with auger and mix with drill tool	Liquid anionic polymer	Stabilizes loose granular soil, instant viscosity, no need to shear with fluid
DE-CHLOR	0.5-1.0 lbs/1,000 gals mix water	Dry chlorine neutralizer	Treats chlorine in municipal water, increases yield and performance of slurry
INSTA-CLEAR DRY	40 lbs/3,000 gals mix water	Reactive separating agent	When added into slurry acts instantly to settle suspended fines
MACRO-FILL	Add 15 lbs 1 pail directly into excavation around the circumference	Dry super-absorbent material	Controls slurry loss in extreme conditions
SAND SEALANT/ MULTI-SEAL	30 gals water or slurry, ½ bag of SAND SEALANT, and a ½ bag of MULTI-SEAL	Natural mineral solid combined with a select blend of four types of materials	Treats advanced fluid loss situations
SLURRY BUSTER DRY	15 lbs of SLURRY BUSTER DRY per 10,000 gallons SHORE PAC polymer slurry	Industrial grade oxidizing agent	Breaks slurry to water
SODA ASH	6 lbs/1,000 gals mix water	Dry pH adjuster	Optimizes polymer performance and yield
SODIUM BICARBONATE	5 lbs/1,000 gals mix water	A buffer used to lower pH	Treats slurry impacted by concrete
SODIUM HYDROXIDE	3-5 lbs/1,000 gals slurry	Dry crystals	Treats swampy black organic soil that impacts the slurry
STONE STOP	Add into hole to stop slurry loss	8-20 mesh granular sealant	Controls slurry loss in extreme conditions

2870 Forbs Avenue, Hoffman Estates, IL 60192
847.851.1800 | 800.527.9948 | cetco.com/dpg

IMPORTANT: The information contained herein supersedes all previous versions, and is believed to be accurate and reliable. For the most up-to-date information, please visit cetco.com/dpg. CETCO accepts no responsibility for the results obtained through the application of this information. All weights are approximate. CETCO reserves the right to update information without notice. REV 9/11

© 2011 CETCO

USE OF SHORE PAC® POLYMER SLURRY

IN SLURRY-DISPLACED FOUNDATION CONSTRUCTION

SAMPLING AND TESTING (CONT'D)

During the excavation of the borehole, slurry samples shall be taken from near-bottom and upper portion at least once during the excavation, and not less than once every four hours, except for overnight shutdowns. When operating conditions make it prudent to sample and test more frequently, sampling and testing shall be done in accordance with a schedule recommended by the manufacturer or the contractor and approved by the Engineer.

Samples shall be collected with a suitable device (double ball bailer) that captures representative samples of sufficient volume (≥ 1.8 liters or 2 quarts) to perform required testing of the slurry. Samples collected as described above shall be tested for Marsh Funnel Viscosity, pH, and specific weight. A written record shall be maintained, showing viscosities, pH values, specific weights, dates, times, excavation identifiers, depths, and locations from which samples were taken (excavation, supply tank, mix tank) and other pertinent information as specified by the Engineer. Testing of specific weight and sand content may be required by the Engineer before placement of reinforcing steel and concrete, if specifications for these parameters are in force for the project.

FLUID LOSS

If high rates of fluid loss (seepage of slurry into the soil) are encountered, the polymer dosage and viscosity of the slurry shall be increased as required to provide adequate control of fluid loss consistent with allowed ranges of slurry viscosity. Alternatively or additionally, fluid loss control agents or other treatments recommended by the manufacturer may be used. Use only additives that are certified by the manufacturer to be compatible with the slurry in use.

STONE STOP is a specially blended mineral used for fluid loss control especially in sandy soils. STONE STOP added to SHORE PAC reduces slurry seepage into saturated open sands and gravels. A granular solid, STONE STOP, is highly recommended as an additive to SHORE PAC when drilling in loose saturated sands. When cobble or gravel is encountered, the viscosity may need to be increased to help prevent loss of fluid to these possible theft zones.

If losses are severe, it may be necessary to add ACCU-VIS to the slurry to either rapidly gain viscosity or use it as a "Bomb" to cut losses. ACCU-VIS can boost cohesion of sand, gravel, and cobble to stabilize and control slurry loss to a degree. ACCU-VIS sharply reduces slurry loss rates in very coarse soils and reduces bottom hole cleaning time. ACCU-VIS's thick gelatinous texture combines with fines to assist in plugging up the theft zones and helps to hold back heaving sand. The application for ACCU-VIS is 1 gallon per 1,000 gallons of fluid. It can be dropped down in weighted, thin, plastic bags, which can be torn up and mixed by the drilling tool.

ACCU-VIS may also be poured into the top of the hole, as it will mix and become viscous without having to shear by force of fluid. ACCU-VIS can be mixed and distributed through the shaft with the drilling tool without forming fisheyes.

SPECIFIC WEIGHT OF THE SLURRY

Because the primary polymers of the standard SHORE PAC system add no significant weight to slurry, measurement of slurry specific weight is a direct indicator of the soil solids content (sand, silt, clay) of the slurry. Sand content is dealt with by a sand specification. Sand tends to settle to the bottom of the excavation because the SHORE PAC polymer slurry has no tendency to gel, so temporary or transient elevated sand content is not a problem during the excavation process. Aside from sand present in the slurry, the remainder of the slurry's specific weight above the specific weight of water (1.00 kilogram per liter, 62.4 lbs/ft^3, or or 8.35 lbs/gal) comes from soil fines dispersed in the slurry. Consequently, the slurry specific weight specification is in effect a limiting factor on the amount of fines that are acceptable in the slurry. High fines content can cause problems if the fines are not held in stable suspension. The slowly-settling fines can create a bed of sediment on the bottom of the excavation after a period of time. The maximum allowable final specific weight for synthetic polymer slurries, according to the present specification, is listed in the specification table.

PREPARATION FOR CONCRETE PLACEMENT

Upon reaching final depth, an initial cleaning of the bottom of the excavation shall be effected with an appropriate tool. If indicated, the slurry column shall be allowed to stand static and undisturbed for a period of time to allow sand to settle toward the bottom of the hole. Slurry samples shall be taken intermittently during this static period from the midpoint of the excavation and from within 60 centimeters of bottom to determine sand content, viscosity, pH, and specific weight. When sand content and specific weight of near-bottom and midpoint samples are within specified maximums (see slurry quality specification tables) or when they stabilize and show no further change over a 30-minute interval during which the excavation is completely static and if tools have not been inserted (indicating sand held in stable suspension), the bottom of the excavation shall be cleaned and placement of rebar and concrete may proceed.

If the sand-size particles in the fluid are not in stable suspension but are settling very slowly, other measures may be required. For example, adjusting the fluid properties to stabilize the suspension and keep the sand from settling; agglomerating soil particles into masses (which can be extracted by the excavating tools), exchanging the fluid in the excavation with clean fluid, treating the slurry with additives to accelerate settling, or otherwise enhance removal of suspended soil.

2870 Forbs Avenue, Hoffman Estates, IL 60192
847.851.1800 | 800.527.9948 | cetco.com/dpg

IMPORTANT: The information contained herein supersedes all previous versions, and is believed to be accurate and reliable. For the most up-to-date information, please visit cetco.com/dpg. CETCO accepts no responsibility for the results obtained through the application of this information. All weights are approximate. CETCO reserves the right to update information without notice. REV 9/11

© 2011 CETCO

USE OF SHORE PAC® POLYMER SLURRY

IN SLURRY-DISPLACED FOUNDATION CONSTRUCTION

ELAPSED TIME BETWEEN BOTTOM-CLEANING AND PLACEMENT OF CONCRETE

Not more than 120 minutes shall elapse between the final cleaning of the bottom of the excavation and the initiation of concrete placement, unless an exception is approved by the Engineer.

TESTING OF SHORE PAC POLYMER SLURRY

MARSH FUNNEL VISCOSITY (MFV)

EQUIPMENT

1. Marsh Funnel
2. Graduated one quart viscosity cup
3. Stopwatch

PROCEDURE

1. Use a double ball bailer to retrieve approximately 2 quarts of slurry.
2. Check the Marsh Funnel to verify that there is no obstruction in the outlet at the bottom of the funnel and the slurry will have an unobstructed flow. Hold funnel upright with a finger over the outlet. Pour the test sample through the screen in the top of the funnel until the mud level just reaches the under side of the screen.
3. Hold the funnel over the viscosity cup and release finger from the outlet and start timing. Record the amount of time in seconds it takes to fill up one quart.
4. Record time in sec/quart on slurry test report.

This test requires both a Marsh Funnel and a Viscosity Cup. MFV is reported in seconds per quart. The time in seconds for a quart of slurry to pass through the funnel tip is reported as viscosity in seconds per quart. MFV is very useful in determining the concentration of polymer molecules, and also its ability to stabilize surrounding soils.

pH (POTENTIAL HYDROGEN- ION)

EQUIPMENT

1. pH Indicator Paper

PROCEDURE

1. Dip a piece of pH indicator paper into the slurry and compare the color change to a standard chart. The result of this test is reported in a number from 1 to 14.
2. Record pH on slurry test report.

In this test, the range for maximum SHORE PAC performance is 8-10. This is the level at which polymer molecules can fully hydrate and extend, creating more viscosity. Levels of pH below 6 (acidic) can affect the performance of the SHORE PAC slurry and should be adjusted by adding SODA ASH, 6 lbs per 1,000 gallons mix water. In addition, the sodium carbonate ion present in 8-10 pH solutions is useful in buffering the slurry against calcium and magnesium contamination.

2870 Forbs Avenue, Hoffman Estates, IL 60192
847.851.1800 | 800.527.9948 | cetco.com/dpg

IMPORTANT: The information contained herein supersedes all previous versions, and is believed to be accurate and reliable. For the most up-to-date information, please visit cetco.com/dpg. CETCO accepts no responsibility for the results obtained through the application of this information. All weights are approximate. CETCO reserves the right to update information without notice. REV 9/11

© 2011 CETCO

USE OF SHORE PAC® POLYMER SLURRY

IN SLURRY-DISPLACED FOUNDATION CONSTRUCTION

TESTING OF SHORE PAC POLYMER SLURRY (CONT'D)

SAND CONTENT DETERMINATION

EQUIPMENT

1. 200-mesh sieve
2. Funnel to fit into sieve
3. Glass sand content tube
4. Wash bottle

PROCEDURE

1. Fill the sand content tube with slurry to the first line marked "mud to here" then fill the remaining space in the tube to the next line marked "water to here". Place your thumb over opening and shake vigorously, inverting several times.
2. Pour the mixture on to the clean, wet screen. Discard the liquid passing through the screen. Add more water to the tube, shake, and pour onto the screen again. Repeat this until tube rinses clean. Wash the sand on the screen until discard water is clear, this removes any remaining silt and clay.
3. Fit the funnel upside down over the top of the screen. Slowly invert the assembly and insert the tip of the funnel into the glass sand content tube. Wash the sand into the tube by spraying a fine stream with the wash bottle making sure not overflow the tube (tapping the sides of the screen may facilitate this process).
4. Allow the sand to settle, from the gradations on the tube, read the volume percent of the sand and record it on the slurry test report.

This test is performed with a standard sand content kit, and the results are reported as percent sand. This test is normally performed at the completion of an excavation and just prior to placing concrete. The sample to be tested should be taken near the bottom of the excavation. When using SHORE PAC slurries the sand content will rarely test over 1.0% sand. Due to its flocculating ability, it drops the sand very quickly and the slurry remains nearly sand free. When performing the sand content test in the field the addition of SLURRY BUSTER solution in place of water to dilute the slurry sample can prevent the accumulation of silt, which creates false sand reading in the test.

SPECIFIC WEIGHT (DENSITY)

EQUIPMENT

1. Mud balance with base and cap per API spec 13B-1, Sec 1

PROCEDURE

1. Place mud balance on a flat level surface and make sure it is clean of any caked on debris.
2. Fill the cup with the slurry to be tested and place the lid on the cup, seat it firmly but slowly with a twisting motion. Be sure some mud runs out of the hole in the cap to free any trapped air.
3. With the hole in the cap covered with one finger, wash and wipe all of the slurry from the outside of the cup and arm of the balance.
4. Set the arm on the fulcrum base and move the sliding weight along the graduated arm until the cup and arm are balanced.
5. Read the density of the mud at the left edge of the sliding weight.
6. Report the results on the slurry test report to the nearest scale division in lb/gal, lb/ft^3, S.G., or psi/1,000 ft of depth.
7. Wash the mud from the cup immediately after each use. It is absolutely essential that all parts of the mud balance be kept clean for accurate results to be obtained.

This test is performed with a standard mud balance and is reported as specific gravity, pounds per cubic foot or pounds per gallon. The lbs density of SHORE PAC slurry should be approximately 64.0 lbs/ft^3. The density may be slightly higher depending on the amount of fine soil particles mixed in the slurry. SHORE PAC slurries have the same density as water, specific gravity 1.0 (± 0.05).

2870 Forbs Avenue, Hoffman Estates, IL 60192
847.851.1800 | 800.527.9948 | cetco.com/dpg

IMPORTANT: The information contained herein supersedes all previous versions, and is believed to be accurate and reliable. For the most up-to-date information, please visit cetco.com/dpg. CETCO accepts no responsibility for the results obtained through the application of this information. All weights are approximate. CETCO reserves the right to update information without notice. REV 9/11

© 2011 CETCO

USE OF SHORE PAC® POLYMER SLURRY

IN SLURRY-DISPLACED FOUNDATION CONSTRUCTION

DRILLING CONTRACTOR: _____

SLURRY ENGINEER: _____

CONTRACT #: _____

DATE: _____

PROJECT INSPECTOR: _____

SHAFT #: _____

DIAMETER: _____

T.D. DEPTH: _____

HOLE VOLUME: _____

PRODUCTS ADDED: _____

TESTS PERFORMED	SAMPLE #1	SAMPLE #2	SAMPLE #3	SAMPLE #4
Time				
Depth (Feet)				
pH (1-14)				
Marsh Funnel Viscosity (Sec/qt)				
Density (lb/gal)				
Sand Content (%)				
Soil Conditions				

COMMENTS: _____

_____

CETCO REPRESENTATIVE/SLURRY ENGINEER: _____

2870 Forbs Avenue, Hoffman Estates, IL 60192
847.851.1800 | 800.527.9948 | cetco.com/dpg

IMPORTANT: The information contained herein supersedes all previous versions, and is believed to be accurate and reliable. For the most up-to-date information, please visit cetco.com/dpg. CETCO accepts no responsibility for the results obtained through the application of this information. All weights are approximate. CETCO reserves the right to update information without notice. REV 9/11

© 2011 CETCO

USE OF SHORE PAC® POLYMER SLURRY

IN SLURRY-DISPLACED FOUNDATION CONSTRUCTION

QUALITY SPECIFICATIONS FOR SLURRIES BASED ON SHORE PAC

SHORE PAC POLYMER SLURRY		
Property	Requirement	Test
Density (lb/ft^3) - just prior to placing concrete	less than or equal to 64*	Mud Weight (Density) API 13 B-1Section 1
Viscosity (seconds/quart)	35 to 125	Marsh Funnel and Cup API 13 B-1 Section 2.2
pH	8.0 to 10.0	Glass Electrode pH Meter or pH Paper
Sand Content (%) - just prior to placing concrete	less than or equal to 1.0%	Sand API 13 B-1 Section 5
*When approved by the engineer, slurry may be used in saltwater, and the allowable densities may be increased up to 2 pcf. Slurry temperature shall be at least 4 °C (40 °F) when tested.		

SHORE PAC is not a hazardous waste, nor does it pose any threat to waters when disposed of according to manufacturer's guidelines.

SHORE PAC is approved for use by The Federal Highway Administration, (FHWA) and is used in State Departments of Transportation throughout the nation. The method for disposing the drilling slurry SHORE PAC on Drilled Shaft Projects has been listed within this correspondence.

DEFINITION AND INGREDIENTS OF SHORE PAC

SHORE PAC is a dry granular synthetic anionic polyacrylamide. SHORE PAC is manufactured from co-polymerization of acrylimide and acrylic acid or its inorganic salts. The molecular weight (in the region of several million Daltons) and negative charge density varies (by variation of the ratio of acrylimide and acrylic acid monomer units).

The polymer used in the product SHORE PAC is designated as non hazardous and is water soluble or water dispersible. The term polymer simply means – many parts, or is an organic chemical having a molecular weight above 200, with greater than eight repeating units. Polymers vary greatly in function and basic properties, such as stability, charge, and molecular weight. In general, polymers can be classified as natural, modified-natural, or synthetic. The term "monomer" simply means – a large molecule made up of simple repeating units.

A polymer is a compound that consists of a chain of repeating base units, called monomers. SHORE PAC is a synthetic polymer.

DEFINITION AND INGREDIENTS OF SHORE PAC

SHORE PAC is a very high molecular weight synthetic polymer with negative charges on the backbone. Its high molecular weight gives viscosity to water at low concentrations.

When SHORE PAC is dissolved in aqueous solution, the very long polymer chains dissolve and orient randomly in the fluid in coils. In freshwater, the repulsion of the negative charges on the backbone of the polymer chains causes the coils to expand and to occupy a large volume in the fluid. When the fluid is sheared, the expanded polymer chains are located in different fluid layers in the shear field. The uncoiling of these expanded polymer chains dissipates mechanical energy and results in viscosity.

The high molecular weight polymer chains are so long that different parts of individual polymer chains bridge different solid particles. It is this adsorption on surfaces and bridging of solid surfaces that makes this polymer effective in keeping solids consolidated while drilling a foundation. In addition, the adsorbed layer of hydrophilic polymer on rock surfaces slows down the diffusion of water into the rock.

CONTROL PRESSURE AND STABILIZE THE BOREHOLE

Two types of pressure are exerted on the borehole during drilling, formation pressure and hydrostatic pressure. Formation pressure can collapse the borehole if it is not overcome by hydrostatic pressure pushing back against the formation. Hydrostatic pressure is the weight or density of the volume of drilling slurry pushing against the formation. In order to have hydrostatic pressure, the drilling slurry must push back against the formation with minimal penetration into the formation. In unconsolidated permeable formations, the hydrostatic pressure occurs when the weight of the fluid is in contact with the impermeable deposits (filter cake) placed on the sides of the borehole by the drilling slurry. The filter cake and the hydrostatic pressure thereby control the formation pressure, reduce slurry loss and prevent caving, resulting in hole stabilization.

2870 Forbs Avenue, Hoffman Estates, IL 60192
847.851.1800 | 800.527.9948 | cetco.com/dpg

IMPORTANT: The information contained herein supersedes all previous versions, and is believed to be accurate and reliable. For the most up-to-date information, please visit cetco.com/dpg. CETCO accepts no responsibility for the results obtained through the application of this information. All weights are approximate. CETCO reserves the right to update information without notice. REV 9/11

© 2011 CETCO

USE OF SHORE PAC® POLYMER SLURRY

IN SLURRY-DISPLACED FOUNDATION CONSTRUCTION

QUALITY SPECIFICATIONS FOR SLURRIES BASED ON SHORE PAC

Normal water weighs 8.34 lb/gal, with the SHORE PAC polymer fluid at 8.40 lb/gal it is necessary to maintain the slurry level 2 to 3 meters (7 to 10 feet) above the surrounding groundwater level. Under normal conditions this 2 to 3 meters of hydrostatic pressure, or head, exerts the pressure necessary (approx. 450 to 640 lb/ft^2, or 2,000 to 3,000 kg/m^2), to support the walls of the excavation and is required to ensure hole stability. Without this positive pressure exerted by the slurry column against the sidewall, soil overburden pressures will cause the excavation to collapse. The natural soil overburden pressures forced against the positive pressure exerted by the slurry column result in little or no leach ability to the surrounding formation.

RECYCLING OF THE SHORE PAC SLURRY

After the slurry testing has been completed and the rebar has been placed, a suction line should be dropped just inside the excavation for recycling of the slurry. While the concrete is being tremied it will displace the slurry forcing it upward. A holding tank large enough to hold the volume of slurry contained within the excavation is required to recycle the SHORE PAC slurry. When concrete is tremie pumped into the bottom of the hole, the displaced SHORE PAC slurry is pumped from the top of the excavation into the holding tank using a centrifugal pump. Disregard concerns about shearing the polymer and destroying it, this is the only pump that will pump a large enough volume to keep-up with the concreted pump truck.

Avoid pumping the last three feet of slurry above the concrete interface, as this slurry will be contaminated from contact with the concrete. The impacted slurry looks like oatmeal and only occurs at the contact with the concrete. The last three feet of impacted slurry should be pumped off to a waste tank, or if allowed the cement contaminated slurry can be released over the top can onto the ground to be mixed into the spoil pile by the loader.

The recycled SHORE PAC slurry is tested for viscosity and pH. While adding water to restore the original volume additional SODA ASH is added to adjust the pH. Next the SHORE PAC is added to restore the slurry to full strength. Usually it requires about ¼ of the amount of SHORE PAC added to the water filling up the holding tank to restore the slurry to its original strength for reuse on the next hole.

BREAKDOWN OF SLURRY

SHORE PAC slurry fluids are non-toxic and are readily degradable upon completion of a project to facilitate disposal. Upon completion of the project, any remaining SHORE PAC is broken down with the chemical oxidizers. SLURRY BUSTER DRY is the most common oxidizer for this purpose. SLURRY BUSTER DRY is calcium hypochlorite.

SLURRY BUSTER DRY is added to the SHORE PAC slurry at a rate of 15 lbs per 10,000 gallons of SHORE PAC slurry. This is accomplished by pumping it back into a holding tank or holding pond and circulating it using the pumps on-site to ensure complete oxidation of the polymer molecules.

SLURRY BUSTER DRY concentrations of 15 lbs per 10,000 gallons of SHORE PAC destroys the active ingredients within the sodium hypochlorite (bleach) and at the same time breaks the polymer, reverting it back to basic water. The end result of SHORE PAC decomposing after its encounter with SLURRY BUSTER DRY is the acrylic acid backbone which is an inert nontoxic substance.

DISPOSAL OF DRILLING SLURRY

Treated slurry fluids are environmentally safe when handled as directed. When breakdown is complete, all that remains is trace acrylate molecules, water and and perhaps some small amount of excess chlorine. The anionic SHORE PAC is reduced to water after the hypochlorite is used to treat the SHORE PAC. This is often safely discharged, or spread on the ground to evaporate, or used in dust control.

Additionally, polymers with the same chemical base as found in SHORE PAC are used in potable water treatment as flocculants, with federal government clearance. They are widely used throughout the world as coagulants and flocculants used for environmental and process improvement, acting through solid/liquid separation. They are used in paper manufacturing, wastewater treatment, mineral and oil extraction, soil conditioning, and as thickeners in cosmetics. As such, they have many regulatory approvals around the world, such as for drinking water treatment, indirect additives for food-contact paper, and for other specific uses. Municipal sewage sludge, which has been polymer-treated for de-watering, is widely applied to agricultural land.

2870 Forbs Avenue, Hoffman Estates, IL 60192
847.851.1800 | 800.527.9948 | cetco.com/dpg

IMPORTANT: The information contained herein supersedes all previous versions, and is believed to be accurate and reliable. For the most up-to-date information, please visit cetco.com/dpg. CETCO accepts no responsibility for the results obtained through the application of this information. All weights are approximate. CETCO reserves the right to update information without notice. REV 9/11

© 2011 CETCO

SHORE PAC®

POLYMER SLURRY SYSTEM PROGRAM

PROJECT SPECIFIC PLANS UTILIZING
SHORE PAC®
IN THE CONSTRUCTION OF SLURRY DISPLACED DRILLED SHAFTS

DATE:
November 26, 2014

DESIGNED FOR:
Donald E. Bottle, Jr.
Buffalo Drilling Company, Inc.
10440 Main Street
Clarence, NY. 14031
P: 716.759.7821 F: 716.759.7823

PROJECT:
Rutland Bridge Replacement
Rutland, VT.

GEOTECHNICAL ENGINEER:

DESIGNED BY:
Darlene Tokarsky
Northeast Territory Sales Manager

REVIEWED BY:
Justin Seago
Construction Sales Manager

© 2014 CETCO. IMPORTANT: The information contained herein supersedes all previous printed versions, and is believed to be accurate and reliable. For the most up-to-date information, please visit www.CETCO.com. CETCO accepts no responsibility for the results obtained through application of this product. CETCO reserves the right to update information without notice.

SLURRY PROPERTIES		
PROPERTY	VALUE	DESCRIPTION
SODA ASH	6	Lb SODA ASH per 1,000 gal water
SHORE PAC	9	Lb SHORE PAC per 1,000 gal water
pH	8-10	6 lbs of SODA ASH per 1,000 gal
Viscosity	85 to 95	Sec/qt
Density	64 or less	Lb/ft^3
Sand Content	1.0 % or less	To be tested at the bottom of the shaft before cage placement

GEOLOGICAL CONDITIONS		
PROPERTY	VALUE	DESCRIPTION
Static Water (Ft)	0.9' - 5.1'	Based on the time of construction and seasonal amount of precipitation, the groundwater level may be different than what is noted in the bore logs.
Soil Log Available	Yes	Bore Log B-103: Sand, little silt, compact, gray, wet. Clayey silt, little fine medium sand, little fine course gravel, medium course gravel. Bore Log B-201: Boulder, mostly broken rock w/sand, tan, moist. Light gray buff colored Dolomite with numbeous closely spaced jointing. Hard to medium hard, slightly to moderately weathered, poor rock.

12' DIAMETER		
PROPERTY	VALUE	DESCRIPTION
Total Number of Shafts	1	Shaft
Casing Diameter (in)	144	12 foot diameter shaft
Hole Diameter gal/ft	845.54	Gallons per foot
Length of Casing	15	
Total Volume of Casing (gal)	12,684	1 shaft x 845.54 gallons per foot x 15 fot aveage depth = 12,684 gallons
Casing Diameter (in)	120	10 foot permanent casing
Hole Diameter gal/ft	587.18	Gallons per foot
Length of Casing	13	
Total Volume of Casing (gal)	7,634	587.18 gallons per foot x 13 foot aveage depth = 7,634 gallons
Casing Diameter (in)	96	8 foot permanent casing
Hole Diameter gal/ft	375.80	Gallons per foot
Length of Casing	18	
Total Volume of Casing (gal)	6,765	375.80 gallons per foot x 18 foot aveage depth = 6,765 gallons
Shaft Diameter (in)	96	8 foot diameter shaft
Hole Diameter gal/ft	375.80	Gallons per foot
Depth of Shaft (ft)	48	48 foot average depth.
Volume of Shaft (gal)	18,038	1 shaft x 375.80 gallons per foot x 48 fot aveage depth = 18,038 gallons
Estimated Over-break	10%	Based on soil conditions and experience, top casing and tooling
Estimated Over-break (gal)	1,804	18,038 gallons x 10% estimated overbreak = 1,804 estimated overbreak gallons
Total Volume of Shaft (gal)	19,843	18,038 gallons + 1,804 estimated overbreak gallons = 19,843 gallons
Estimated Total Volume (gal)	46,926	27,083 cassing gallons + 19,863 shaft gallons = 46,926 total gallons
Total ft^3	6,274	
Total yd^3	233	

TOTAL VOLUME ESTIMATE		
PROPERTY	VALUE	DESCRIPTION
Total Shafts	1	1 shaft 12 foot in diameter
Basic Hole Volume (gal)	46,926	Gallons
Estimated Fluid Loss	35%	Fluid loss will occur because of loss in spoils, drilling procedures, tooling, drops in viscosity, recycle, gravel, and unknown theft zones.
Estimated Fluid Loss (gal)	16,425	46,926 gallons x 35% estimated fluid loss = 16,425 gallons estimated fluid loss
Estimated Total Gallons	63,351	46,926 gallons + 16,425 fluid loss gallons = 63,351

© 2014 CETCO. IMPORTANT: The information contained herein supersedes all previous printed versions, and is believed to be accurate and reliable. For the most up-to-date information, please visit www.CETCO.com. CETCO accepts no responsibility for the results obtained through application of this product. CETCO reserves the right to update information without notice.

CETCO®
OUR STANDARDS. YOUR PEACE OF MIND.
A Minerals Technologies Company

SITE SPECIFIC RECOMMENDATIONS

PHYSICAL PROPERTIES

This program is calculated based on 1 drilled shafts (12) ft in diameter. Total estimated total volume is 46,926 gallons. Based on boring logs the soil profile consists of sand, little silt, compact, gray, wet. Clayey silt, little fine medium sand, little fine course gravel, medium course gravel. Bore Log B-201 consists of boulders, mostly broken rock with sand, tan, moist. Light colored buff colored Dolomite with numerous closely spaced jointing. Hard to medium hard, slightly to moderately weathered, poor rock. The SODA ASH mixture should be 6 lbs per 1,000 gallons of mix water. In this application mix water should be at a pH of 10. This should be sufficient to maintain a pH of 10. The program will require SHORE PAC polymer slurry with an estimated fluid viscosity of 85 to 95 seconds per quart for drilling procedures utilizing about **9 lbs of SHORE PAC per 1,000 gallons** of mix water under these conditions. We always recommend starting out with high viscosity until drilling consistency and production has been established. Although programs are designed based on geotechnical boring logs, because of unknown conditions or theft zones, even higher viscosity may be needed during drilling procedures which may demand more polymer/higher viscosity than specified.

Fluid loss is unknown but based on information from the boring logs we estimate fluid loss at 35%. Fluid loss will occur because of loss in spoils, drilling procedures, tooling, drops in viscosity, recycle, gravel, and unknown theft zones. Estimated overall fluid loss is 16,425 gallons. Total workable hole volume of 63,351 gallons. It could be more and it could be less.

TANKS

It is our recommendation to pre-mix in 1 21,000 gallon **open top tanks with no baffles or weir walls. Tanks must also be clean and free of any contamination that will adversely affect the slurry.** This is always dependent on locations, number of rigs in operation, and desired production. One tank should be dedicated to fresh slurry and mixing. While the remaining tanks should be used to recycle and boost the viscosity of used slurry. Finally, smaller tank, waste pit or poly tank should be used to hold SHORE PAC slurry contaminated by concrete.

MIX WATER SOURCE

A nearby, adequate, unlimited, water source needs to be available. The mix water source should be tested for pH, chlorine, and hardness. If river water is used, DE-CHLOR is not necessary. If water is extremely hard, SODA ASH should be added at about 6 lbs per 1,000 gallons.

ADDITIVES SUGGESTED

Additives are not suggested unless it is clearly determined that they may be needed. On this project it is suggested to use a combination of:

- **SODA ASH** - Is to be mixed at 6 lbs/1,000 gal to precipitate out calcium and magnesium or neutralize contamination.
- **C/S Granular** - Is a dry granular sodium bentonite material for fluid loss control.
- **SLURRY BUSTER DRY** - Is an industrial grade breaker is used at 15 lbs/10,000 gal to break down the slurry.

PUMPS

Centrifugal pumps will move the polymer slurry quicker and keep up with concrete pumping. The velocity and volume gained by using centrifugal pumps is worth the reduction in viscosity. It is common to use centrifugal pumps to recycle the slurry back to the holding tanks.

© 2014 CETCO. IMPORTANT: The information contained herein supersedes all previous printed versions, and is believed to be accurate and reliable. For the most up-to-date information, please visit www.CETCO.com. CETCO accepts no responsibility for the results obtained through application of this product. CETCO reserves the right to update information without notice.

CETCO®
OUR STANDARDS. YOUR PEACE OF MIND.
A Minerals Technologies Company

MIXING THE FIRST TANK

When using a 21,000 Tank – The tank may not be full, so this estimate is based on 19,000 gallons of mix water.

- **SODA ASH** – Mix 100 lbs or 2 pails of SODA ASH directly into the tank by inflow and circulate.
- **SHORE PAC** – Mix/Shear (#) lbs or (#) pails of SHORE PAC slowly into the tank at the inflow while tank is circulating or bubbling. Use a pump or bubbler system to circulate the slurry until homogenous.

HEAD PRESSURE

It is our recommendation to keep shafts as full as possible while drilling to exert maximum hydrostatic head pressure on the drilled formations unless cases of lower theft zones are encountered. If so keep hole full enough to maintain head pressure without sudden loss or force fluid to the formations.

For upper hole stability hydrostatic head pressure needs to be maintained at no less than <u>6' over static water at all times</u> (more is better) to keep the hole open. When static water is near or at surface, top cans may have to be elevated out of the hole to maintain head pressure. Constructability with tooling and steel casing is at the driller's discretion.

SLURRY ENGINEERING OVERVIEW

- Client consultation with slurry engineers
- Research & development laboratory available if needed
- Analysis of boring logs & site specific recommendations
- Design of site specific slurry programs with recommendations
- Onsite slurry construction, monitoring and troubleshooting
- Onsite training of clients personnel in monitoring, testing and slurry construction
- Slurry technician certification available upon completion of required training
- Slurry Schools and seminars may be conducted at your location upon request
- A bio on our engineers can be provided upon request

© 2014 CETCO. IMPORTANT: The information contained herein supersedes all previous printed versions, and is believed to be accurate and reliable. For the most up-to-date information, please visit www.CETCO.com. CETCO accepts no responsibility for the results obtained through application of this product. CETCO reserves the right to update information without notice.

CETCO®
OUR STANDARDS. YOUR PEACE OF MIND.
A Minerals Technologies Company

Disposal of Shore Pac Slurry

Introduction

The use of synthetic polymer slurries as replacements for Bentonite and other minerals has become widespread. Key attractions of polymer slurries have been their degradability and low environmental impact, which has translated into reduced disposal difficulty for contractors.

The drilling slurry Shore Pac manufactured by CETCO Construction Drilling Products, to be used on a drilled shaft Project is not a hazardous waste, nor does it pose any threat to the waters of the State.

Is Polymer Slurry Toxic?

A Shore Pac slurry system can be classified as an acrylamide which falls under the general classification of a polyacrylamide. The acrylic contents of the molecule are non-hazardous and non-toxic. Shore Pac's chemical classification is listed in the U.S.A. EPA TSCA manual under code 25085-02-3. Shore Pac is identified as a non-toxic substance as defined by the U.S.A. Environmental Protection Agency. Shore Pac is approved for use by The Federal Highway Administration, (FHWA), and is used in States throughout the nation. The Method for disposing the drilling slurry Shore Pac on this Drilled Shaft Project has been listed within this correspondence.

Is Polymer Slurry Biodegradable?

Synthetic polymers are not readily biodegradable. Biodegradable means that slurry made from a biodegradable polymer will be subject to spoilage with breakdown of the slurry. Polymer slurry is not subject to spoilage. Shore Pac slurry is chemically degradable. Chemically degradability relates to chemical oxygen demand, or COD, and is the degrading of the polymer through interaction with another non-living substance. Shore Pac slurry is chemically degradable on demand by treatment with the chemical oxidizing agent Slurry Buster.

The Shore Pac Polymer slurry contacts the surrounding soil and groundwater during construction of cast-in-drilled-hole piling but does not migrate into the surrounding soil of the excavation due to a gel membrane that forms along the sidewalls of the borehole. This membrane cohesively binds the soils together forming temporary glue, which seals off the vertical liquid slurry column. The product Shore Pac being proposed for use as drilling slurry for the foundation project is not harmful to the environment.

Is Polymer Slurry able to be Broken Down?

At the end of the job there is usually a need to dispose of a quantity of polymer slurry which remains from the last borehole or excavation. The Shore Pac slurry is degraded by a variety of mechanisms. The polymer is broken down or removed from the slurry during use in drilling or excavating. The mechanisms which cause this include adsorption (bonding) onto earth soils and chemical reaction with alkalis and contaminates such as calcium in the slurry, the make-up water or the groundwater.

Shore Pac slurry fluids are non-toxic and are readily degradable upon completion of a slurry job to facilitate disposal. Upon completion of the project, any remaining **Shore Pac** is broken down with the chemical oxidizer (**Slurry Buster)** the most common oxidizer for this purpose.

The Slurry Buster solution is added to the Shore Pac slurry to be treated. After the breaker is added, the slurry is circulated using the pumps on-site to ensure complete oxidation of the polymer molecules. This is accomplished by pumping it back into a holding tank.

The Slurry Buster destroys the active ingredients within the polymer and at the same time breaks the polymer, reverting it back to basic water. The end result of Shore Pac decomposing after its encounter with (**Slurry Buster)** is not a harmful substance.

2870 Forbs Avenue Hoffman Estates, IL 60192
847.851.1800 | *800.527.9948* | cetco.com/dpg

IMPORTANT: The information contained herein supersedes all previous printed versions, and is believed to be accurate and reliable. For the most up-to-date information, please visit www.CETCO.com. CETCO accepts no responsibility for the results obtained through application of this product. CETCO reserves the right to update information without notice.
© 2012 CETCO

Is Polymer Slurry Disposable?

Treated slurry fluids are environmentally safe when handled as directed. When breakdown is complete**, all that remains is trace acryl ate molecules and water.** This is often safely discharged or simply spread on the ground to evaporate or used in dust control.

Additionally, polymers with the same chemical base as found in Shore Pac are used in potable water treatment as flocculants, with federal government clearance. They are widely used throughout the world as coagulants and flocculants used for environmental and process improvement, acting through solid/liquid separation. They are used in paper manufacturing, wastewater treatment, mineral and oil extraction, soil conditioning and as thickeners in cosmetics. As such, they have many regulatory approvals around the world, such as for drinking water treatment, indirect additives for food-contact paper and for other specific uses. Municipal sewage sludge, which has been polymer-treated for de-watering, is widely applied to agricultural land.

CETCO citifies that Shore Pac slurry is not harmful to the environment and is safe for disposal.

2870 Forbs Avenue Hoffman Estates, IL 60192
847.851.1800 | *800.527.9948* | cetco.com/dpg

IMPORTANT: The information contained herein supersedes all previous printed versions, and is believed to be accurate and reliable. For the most up-to-date information, please visit www.CETCO.com. CETCO accepts no responsibility for the results obtained through application of this product. CETCO reserves the right to update information without notice.
© 2012 CETCO

MUD/SLURRY TEST KIT

COMPLETE TESTING KIT

DESCRIPTION

In any job or trade special tools, equipment, and instruments are essential to effectively and efficiently complete our work. In the drilling industry we also have to have the proper tools and equipment. Sometimes it's amazing how a tool or piece of equipment as small or in expensive as it may seem can have such an impact on a drilling operation. The MUD/SLURRY TEST KIT contains all of the testing equipment you need in the field.

COMPONENTS

- Mud Balance, Plastic, without Case
- Marsh Funnel Viscometer
- Measuring Cup, Plastic, 1,000 ml
- pH Sticks, 0 – 14 range, (100/box)
- Total Hardness Test Strips, SofChek, (50/box)
- Wash Bottle, 250 ml
- Model 100, Basic Stopwatch
- Pocket Calculator, Eight Digit, Dual Power
- Sand Content Kit
- Sieve, 200 mesh, 2.5 inch diameter
- Funnel, plastic
- Tube, Sand Content, Glass, graduated 0 – 20%
- Case, Executive Style
- Foam Insert

North America: 847.851.1800 | 800.527.9948 | www.CETCO.com

© 2014 CETCO. IMPORTANT: The information contained herein supersedes all previous printed versions, and is believed to be accurate and reliable. For the most up-to-date information, please visit www.CETCO.com. CETCO accepts no responsibility for the results obtained through application of this product. CETCO reserves the right to update information without notice.

UPDATED:OCTOBER 2013

TDS_MUDSLURRYTESTKIT_AM_EN_201310_v1

CETCO®
OUR STANDARDS. YOUR PEACE OF MIND.
A Minerals Technologies Company

MUD BALANCE

MUD WEIGHT MEASUREMENT TOOL

DESCRIPTION

A mud balance is an instrument generally used to determine mud weight that will permit accurate measurement within 1/10 lb/gal or 1/2 lb/ft^3. Mud weight can be expressed in lb/gal, lb/ft^3, psi/1,000 ft of depth or specific gravity (S.G.).

The mud balance should be calibrated frequently with freshwater at 70˚F which will give a reading of 8.33 lbs/gal or 62.3 lbs/ft^3.

PROCEDURE

1. Fill the cup with mud to be weighed.
2. Place the lid on the cup and seat it firmly but slowly with a twisting motion. Be sure some mud runs out of the hole in the cap.
3. With the hole in the cap covered with one finger, wash or wipe all mud from the outside of the cup and arm.
4. Set the knife on the fulcrum and move the sliding weight along the graduated arm until the cup and arm are balanced.
5. Read the density of the mud at the left-hand edge of the sliding weight.
6. Report the result to the nearest scale division in lb/gal, lb/ft^3, S.G., or psi/1,000 ft of depth.
7. Wash the mud from the cup immediately after wash use. It is absolutely essential that all parts of the mud balance be kept clean if accurate results are to be obtained.
8. Table 1 conversion data available for reference.

TABLE 1 MUD BALANCE CONVERSION DATA

lb/gal	lb/ft^3	Specific Gravity	Gradient, psi/100 ft of depth	lb/gal	lb/ft^3	Specific Gravity	Gradient, psi/100 ft of depth
6.5	48.6	0.78	338	16.0	119.7	1.92	831
7.0	52.4	0.84	364	16.5	123.4	1.98	857
7.5	0.84	0.90	390	17.0	127.2	2.04	883
8.0	59.8	0.96	416	17.5	130.9	2.10	909
8.3	62.3	1.00	433	18.0	134.6	2.16	935
8.5	63.6	1.02	442	18.5	138.4	2.22	961
9.0	67.3	1.08	468	19.0	142.1	2.28	987
9.5	71.1	1.14	494	19.5	145.9	2.34	1013
10.0	74.8	1.20	519	20.0	149.6	2.40	1039
10.5	78.5	1.26	545	20.5	153.3	2.46	1065
11.0	82.3	1.32	571	21.0	157.1	2.52	1091
11.5	86.0	1.38	597	21.5	160.8	2.58	1117
12.0	89.8	1.44	623	22.0	164.6	2.64	1143
12.5	93.5	1.50	649	22.5	168.3	2.70	1169
13.0	97.2	1.56	675	23.0	172.1	2.76	1195
13.5	101.0	1.62	701	23.5	175.8	2.82	1221
14.0	104.7	1.68	727	24.0	179.5	2.88	1247
14.5	108.5	1.74	753	(Mud gradient in psi/M ft) (0.09124) = mud density in lb/gal			
15.0	112.2	1.80	779	(Mud gradient in psi/M ft) (0.144) = mud density in lb/ft^3			
15.5	115.9	1.86	805	(Mud gradient in psi/M ft) (0.023) = specific gravity			

North America: 847.851.1800 | 800.527.9948 | www.CETCO.com

© 2014 CETCO. IMPORTANT: The information contained herein supersedes all previous printed versions, and is believed to be accurate and reliable. For the most up-to-date information, please visit www.CETCO.com. CETCO accepts no responsibility for the results obtained through application of this product. CETCO reserves the right to update information without notice.

UPDATED: OCTOBER 2013

TDS_MUDBALANCE_AM_EN_201310_v1

CETCO®
OUR STANDARDS. YOUR PEACE OF MIND.
A Minerals Technologies Company

SAND CONTENT KIT

SAND CONTENT MEASUREMENT TOOL

DESCRIPTION

It is desirable to know the sand content of drilling muds because excessive sand may result in the deposition of a thick filter cake on the wall of the hole, or may settle in the hole about the tools when circulation is stopped, thus interfering with successful operations of drilling tools or setting of casing. High sand content also may cause excessive abrasion of pump parts and pipe connections. Sand sized particles are defined as anything larger than 74 microns. This test can be performed on low solids muds as well as on weighted muds.

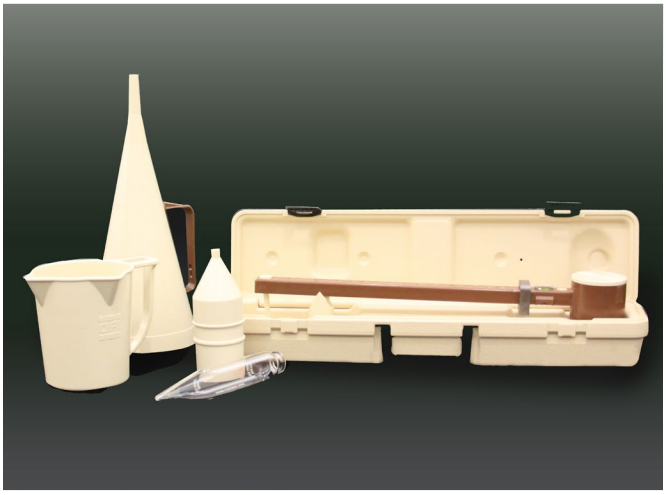

PROCEDURE

1. Fill the sand content tube to the indicated mark with mud. Add water to next mark. Close the mouth of the tube and shake vigorously.
2. Pour the mixture onto the clean, wet screen. Discard the liquid passing through the screen. Add more water to the tube, shake and again pour onto the screen. Repeat until the wash water passes through clear. Wash the sand retained on the screen to free it of any remaining mud.
3. Fit the funnel upside down over the top of the screen. Slowly invert the assembly and insert the tip pf the funnel into the mouth of the tube. Wash the sand into the tube by spraying a fine spray of water through the screen. (Tapping on the side of the screen with a spatula handle, may facilitate this process). Allow the sand to settle, from the gradations on the tube, read the volume percent of the sand.
4. Report the sand content of the mud in volume percent. Report the source of the mud sample, i.e., above shaker, suction, pit etc. Coarse solids other than sand will be retained on the screen (e.g., lost circulation material, coarse barite, coarse lignite, etc.) and the presence of such solids should be noted.

North America: 847.851.1800 | 800.527.9948 | www.CETCO.com

© 2014 CETCO. IMPORTANT: The information contained herein supersedes all previous printed versions, and is believed to be accurate and reliable. For the most up-to-date information, please visit www.CETCO.com. CETCO accepts no responsibility for the results obtained through application of this product. CETCO reserves the right to update information without notice.

UPDATED: OCTOBER 2013

TDS_SANDCONENTKIT_AM_EN_201310_v1

CETCO®
OUR STANDARDS. YOUR PEACE OF MIND.
A Minerals Technologies Company

MARSH FUNNEL & CUP

VISCOSITY MEASUREMENT TOOL

DESCRIPTION

Viscosity is a measurement of a fluids resistance to flow: the greater the resistance, the higher the viscosity. As measured by the MARSH FUNNEL, the viscosity of the fluid in question is influenced by the density of the fluid (solids content) and gelation rate (beneficiated solids content). The viscosity of the drilling fluid in use should be based on a combination of the following parameters: drilling rate, pump and output capacity, mud density, cutting size, hole size, and solids removal equipment.

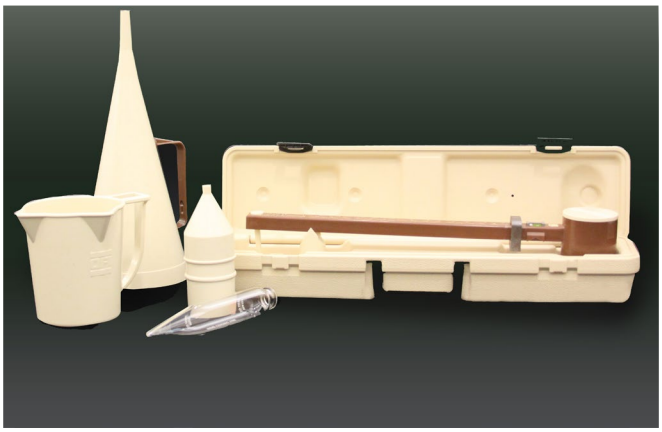

PROCEDURE

1. Hold funnel in upright position with index finger over outlet.
2. Pour the test sample through the screen in the top of the funnel until the mud level just reaches the under side of the screen.
3. Remove finger from outlet and measure number of seconds for a quart of sample to run out.

North America: 847.851.1800 | 800.527.9948 | www.CETCO.com

© 2014 CETCO. IMPORTANT: The information contained herein supersedes all previous printed versions, and is believed to be accurate and reliable. For the most up-to-date information, please visit www.CETCO.com. CETCO accepts no responsibility for the results obtained through application of this product. CETCO reserves the right to update information without notice.

UPDATED: OCTOBER 2013

TDS_MARSHFUNNELANDCUP_AM_EN_201310_v1

CETCO®
OUR STANDARDS. YOUR PEACE OF MIND.
A Minerals Technologies Company

SAMPLE BAILER

DOUBLE BALL DISCRETE DEPTH COLLECTION

DESCRIPTION

SAMPLE BAILER has a second ball check located at the top that permits the bailer to secure a sample from a specific depth without influence from the slurry above. Meets contract specifications for collecting slurry samples for testing physical drilling slurry properties.

RECOMMENDED USE

Tie the suspension cord to the bailer hook. Lower the bailer slowly down the borehole to the desired depth. Yank up on the SAMPLE BAILER allowing the SAMPLE BAILER to collect a sample, and then raise the bailer gently to the surface to maintain sample integrity. Empty the SAMPLE BAILER contents into a sample bottle.

ADVANTAGES

- Collects slurry samples accurately
- Meets specification to collect slurry samples from different depths
- Large enough to collect slurry for all the required tests
- Used to collect samples for specified physical properties of drilling slurry density, sand content, pH, and viscosity

CHARACTERISTICS

The white PVC re-usable sample bailers are designed to retrieve a sample from specific depths. The threaded all PVC construction and the removable top and bottom valves make cleaning quick and easy.

PACKAGING

3” white PVC threaded SAMPLE BAILER 3.500 O.D. x 24” long.

North America: 847.851.1800 | 800.527.9948 | www.CETCO.com

© 2014 CETCO. IMPORTANT: The information contained herein supersedes all previous printed versions, and is believed to be accurate and reliable. For the most up-to-date information, please visit www.CETCO.com. CETCO accepts no responsibility for the results obtained through application of this product. CETCO reserves the right to update information without notice.

UPDATED: OCTOBER 2013

TDS_SAMPLEBAILER_AM_EN_201310_v1

CETCO®
OUR STANDARDS. YOUR PEACE OF MIND.
A Minerals Technologies Company

January 12, 2015

Mr. Donald Bortle
Buffalo Drilling Company
10440 Main Street
Clarence, NY 14031

Dear Mr. Bortle,

I want to thank you for being a loyal customer and distributor of CETCO products for over 15 years. That goes a long way in saying that relationships, quality and service are so important!

That being said, I wanted to advise, that although we do not provide certificates of attendees to our slurry training classes, or keep attendance records of who has attended, I know that we have provided training for Buffalo Drilling Company employees in prior years and that Buffalo Drilling Company is an active member of the ADSC and has attended their classes and training as well.

Once again, I want to thank you for your loyalty and look forward to working with you on your future projects.

Best Regards,

Darlene Tokarsky
Territory Sales Manager, CETCO

2870 Forbes Avenue, Hoffman Estates, IL 60192

North America: 847.851.1800 | 800.527.9948 | www.CETCO.com

© 2014 CETCO. IMPORTANT: The information contained herein supersedes all previous printed versions, and is believed to be accurate and reliable. For the most up-to-date information, please visit www.CETCO.com. CETCO accepts no responsibility for the results obtained through application of this product. CETCO reserves the right to update information without notice.

CETCO®
OUR STANDARDS. YOUR PEACE OF MIND.
A Minerals Technologies Company

1	**09-110**	Feb-09	Gaetano Construction	Matt Brewing Co.	Utica	NY	CA	**10 @ 30", 24 @36", & 4 @42" x 21 LF**
2	**09-111**	Mar-09	Hayner Hoyt	Crouse Hines Hospital	Syracuse	NY	CA	**6 @ 60" and 21 @ 72" x 16' OB + 10' rock**
3	**09-126**	Jul-09	Rotha	Pearl St > P & W Railfoad	Middleton	CT	CA	**8 @ 1.22 M x 107 Meters ***
4	**10-122**	Jun-10	O'Connell Electric	UB Light Foundations	Buffalo	NY	CA	**8 @ 84" x 12' OB + 8' Rock Sock**
5	**09-130**	Jul-10	Thalle	Gilboa Dam, Temp. Bridge Caissons	Catskill	NY	CA	**21 @ 36" x 0 - 35 LF OB w/ 5 - 10 LF High RQD Sandstone**
6	**09-166**	Mar-10	Hueber Breuer - Pike	St Joe's Addition	Syracuse	NY	CA	**18 @ 36", 32 @ 48", 21 @ 60", 14 @ 72" , & 5 @ 84" x 21- 25 LF w/ Rock**
7	**11-143**	Oct-11	Polivka International	Intermodal & Auto Light Foundations	Mechanicville	NY	CA	**13 @ 48" x 30 LF includes 11' Shale Rock Sockets**
8	**11-116**	Sep-11	Schultz Construction	Fulton County Retaining Wall	Mayfield	NY	CA	**151m Shafts 20m Rock 189m Piles**
9	**11-137**	Oct-11	DiPizio	Rt 238 Bridge > Stevens Brk	Attica	NY	SP	**Rock Sockets - HP's- Lagging**
10	**10-115**	Jul-10	Tunney Electric	Clarence Light Foundations	Clarence	NY	SH	**4 - 30"x12' w 6-8 LF Limestone Bedrock**
11	**11-113**	Aug-11	Holdsworth-Kilowski	Special Events Center	Brockport	NY	CA	**22 @ 36" x 25 LF and 1 @ 48" x 25 LF**
12	**11-149**	Feb-12	Pondview Construction	Bridge #02588 Rt 97 > Byron Brook	Norwich	NY	CA	**20 Caissons 30" x 25 LF of Overburden and 2 LF Rock Sockets ***
13	**12-149**	Aug-12	Rotha	Bridge #03824 Sigourney St	Hartford	CT	CA	**8 Caissons 48" x 105 LF of Overburden and 5 LF Rock Sockets ***
14	**12-135**	Mar-13	Pondview Construction	Bridge #05366 Laural Ln > Mt Hope River	Mansfield	CT	SH	**8 Shafts 24" x 30 LF of Overburden and 3 LF Rock Sockets**
15	**13-160**	Jul-14	William H. Lane, Inc.	RG&E SubStation Construction	Brighton	NY	CA	**3 @ 96" & 10 @ 10 @ 60" x 60 LF of Overburden w/ Vibrated Perm. + Temp. Casing**
16	**14-116**	Oct-14	Ecco III Construction	Stewart AFB Abutments & Piers	New Windsor	NY	CA	**6 @ 60" & 8 @ 36" x 15-20 LF of OB w/ 54" & 30" x 11-14 LF Rock Sockets * ****
17	**14-134**	Aug-14	Beck Construction	I-495 Bridge Repair	Wilmington	DE	CA	**32 @ 48" x 160 LF of Overburden w/ 5' Rock Sockets ***
18	**14-143**	Oct-14	Power and Const. Grp, Inc.	Limited Headroom Beneath 450 kva Wires	Rochester	NY	CA	**4 @ 96" x 60' OB Mudded w/Permanent Casing**

1	**09-110**	Anthony Obernesser	315-733-4611
2	**09-111**	Marty Rainbow	315-455-5941
3	**09-126**	Russell Bush	860-678-7600
4	**10-122**	Matthew McDonald	585-924-2176
5	**09-130**	Craig Thompkins	919-201-0310
6	**09-166**	Bill Pellenz	315.448.5672
7	**11-143**	Michael Mann	704-806-6623
8	**11-116**	Bill Steele	518-885-0060
9	**11-137**	Rosanne DePizio	716-892-1097
10	**10-115**	Brian Bartha	716-741-8284
11	**11-113**	Michael Pesce	585-424-1920
12	**11-149**	Bill Swale Jr.	860-668-2022
13	**12-149**	Russell Bush	860-678-7600
14	**12-135**	Bill Swale Jr.	860-668-2022
15	**13-160**	Rick Austin	607-242-4827
16	**14-116**	Bob Arbusto	914-963-3600
17	**14-134**	Keith Anderson	210-842-4934
18	**14-143**	Darla France	585-889-6016

* Sonic Logging Analysis
** Osterburg Load test

2006 Mark Bruning Completes ADSC Slurry School (Certificate on Record)
2010 Don Morris Completes ADSC Slurry School (Can't locate Certificate)

CETCO does NOT provide certificates of training for their slurry classes nor do they keep records of attendance.

Don Morris has worked as an Operator and Supervisor on Projects 1, 2, 3, 4, 6, 7, 8, 12, 13, and 14, 15, 16, 17, and 18.
The ground man who could be working with Don might be one of many who have worked with him on many of these projects. Robert Fetter, Erik Sienkiewicz, or Brob Fromwiller are the most likely.
They have worked the listed projects as either operators, site supervisors, and lead ground men.
This will only be a two man crew with DA Collins supplying the additional labor to BDC as needed.
If these men are substituted for, the replacements will be parties who have worked with them on the above listed projects.

On-site supervisors and drill operators

BDC combines drill operators and site supervisors - one, possibly two of the following individuals will be working at the River Street Bridge Project. BDC also employs very competent ground men, but wouldn't consider them to be supervisors. Because BDC has a Geotechnical Drilling and Engineering Division, the listed operators have undergone both the operation and classification of soils using a geotechnical rig for instruction on soils and rock characteristics. We have found this to be one of those priceless training programs that allows our operators to learn to recognize soil types and be able to adapt when the provided geotechnical logs are either not accurate or taken a distance from where the actual construction is to take place.
All three of the operators have had training sessions in mudding techniques, rig mechanics, lifting & hoisting, cable & sling safety, site management, tool-box meetings, and safety training.
They have been involved in the construction of multiple hundreds of caisson and drilled soldier pile projects in NY, OH, MA, PA, CT, NH, VT, RI, ME, and WV..All have mudded shafts, cored through boulders, with oversized bits in order to advance casing, cored out rock sockets, have worked magnificently with owners, project managers, inspectors, and engineers, and have the capacity to analyze most any troublesome situation and resolve said issue. Mechanically speaking, these three are extremely competent when it comes to resolving rig problems and doing field repairs.

Their first day of employment with BDC is listed below.

a) Mark Bruning - Start 8-1-92 **b) Don Morris - Start 8-1-91** **Wally Greiner - Start 7-2-90** **Don Rimbeck - Start 5-6-91**

ADSC

Certificate of Participation

This Certificate is awarded to

Mark Bruning

For Participation at ADSC's 2006 National Slurry School

Kirby Pray
ADSC Slurry School Chairman

Michael D. Moore
ADSC Education Administrator

November 9-11, 2006
St. Petersburg, Florida

BUFFALO DRILLING COMPANY, INC.
10440 MAIN STREET
CLARENCE, N.Y. 14031
(716) 759-7821
FAX (716) 759-7823

ATTN: **Volker Burkowski**
Kubricky Construction Corp.

Projects: Replacement of River Street Bridge
North River Street
Rutland, Vermont

Date: 22-Dec-14

Submittal for Temporary Casing Removal

When temporary casing is required the extraction of said casing requires that specific procedures are adhered to.

Assuming the casing is already in place and concrete is ready to be poured two situations may arise, the hole may be dry or there may be water infiltration that can not be stopped.

Dry Hole - Concrete may be placed via freefall, tremie, or using elephant trunk in a continuous motion until the concrete is at least five feet above the bottom of the sleeve. At this time a sudden jerk on the sleeve to dislodge it from the bottom taking care not to raise it by more then three to six inches. Now the sleeve may be smoothly removed from the shaft while maintaining at least a five foot head above the bottom of the sleeve.

Wet Hole - If water infiltration can not be stopped then the water must reach its static level before concrete can begin to be poured. At this point concrete can be bottom dumped, pumped, or tremie poured till the concrete level rises to a minimum of five feet above the bottom of the sleeve. The water above the concrete can then be pumped and / or mucked off and the pipe removal procedure can mimic the procedure used in a dry hole while always maintaining a minimum five foot head above the bottom of the sleeve. This wet hole procedure is also applicable for mud or slurry drilling.

BDC will be employing a concrete pump truck on this particular project.

BUFFALO DRILLING COMPANY INC.

Donald E. Bortle Jr.

Donald E. Bortle Jr.
Project Manager

BUFFALO DRILLING COMPANY, INC.
10440 MAIN STREET
CLARENCE, N.Y. 14031
(716) 759-7821
FAX (716) 759-7823

ATTN: **Volker Burkowski**
Kubricky Construction Corp.

Project: Replacement of River Street Bridge
North River Street
Rutland, Vermont

Date: 22-Dec-14

Submittal for Temporary Casing

Buffalo Drilling Company, Inc.(BDC) incorporates both new and used steel pipe in our temporary casing inventory.

The temporary sleeves that will be used for your project will consist of 144, 120, 108, and 96 inch diameters of varying lengths - the determing factor will be how the soils react during drilling. Thickness will vary from .50 to 1.0 inches, and meets or exceeds the yield and tensile strengths of:

ASTM Spec. A53 Grade B

Minimum Yield Strength of 35,000 psi

Any midwelds that may be present are all constructed in house by BDC's certified welders.

BUFFALO DRILLING COMPANY INC.

Donald E. Bortle Jr.

Donald E. Bortle Jr.
Project Manager

BUFFALO DRILLING COMPANY, INC.
10440 MAIN STREET
CLARENCE, N.Y. 14031
(716) 759-7821
FAX (716) 759-7823

ATTN: **Volker Burkowski**
Kubricky Construction Corp.

Project: Replacement of River Street Bridge
North River Street
Rutland, Vermont

Date: 31-Dec-14

Submittal for Permanent Casing (New & Used)

Buffalo Drilling Company, Inc.(BDC) incorporates both new and used steel pipe in our casing inventory for the Rutland Project. The three upper pieces of temporary casing (96, 120, and 144 inch diameter) used will be extracted after the concrete is poured leaving a permanent 108 inch diameter casing in place.

The 108 inch diameter permanent sleeve, that will be used for your project, will be new or used certifiable American manufactured steel casing. BDC has elected to use the 108 inch diameter casing for the top of the shaft so as to avoid stopping the pour to cut and leave a bottom 15 to 20 foot section of the 96 inch temporary casing in place. BDC had initially planned on stopping the pouring process after the bottom of the 96 inch diamameter temporary casing was 15 to 20 feet below the top of caisson elevation and BDC would then cut the casing at or above the top of caisson elevation thus leaving 15 to 20 feet of domesically manufactured casing permanently in place.

Casing thickness will varies from .625 to 1.0 inches, and meets or exceeds the yield and tensile strengths of:

ASTM Spec. A53 Grade B

Minimum Yield Strength of 35,000 psi

Any midwelds that may be present are all constructed in house by BDC's certified welders.

BUFFALO DRILLING COMPANY INC.

Donald E. Bortle Jr.

Donald E. Bortle Jr.
Project Manager

STATE OF VERMONT
AGENCY OF TRANSPORTATION
MATERIAL AND RESEARCH SECTION - STRUCTURAL CONCRETE UNIT

STRUCTURAL CONCRETE MIX DESIGN SUBMISSION

Agency Use Only	
Mix ID	SC00-SCC-0
Mix Design #	
Approved by	
Approved Date	
Spec Book Year	2011

Concrete class: Class SCC
Additional Description: With Fly Ash
Ready Mix Supplier: CARRARA, JP & SONS INC - N CLARENDON, VT
Designed By: Benjamin Cota
Design strength: 4000 PSI
Mix Design Style: SCC
Agg weight - SSD or Dry: SSD

Mix designs are valid for a 12 month period from date of approval or unless there is a change in material, material property or design parameter.

Cement:				Specific Gravity	3.150		564	lb/cy	2.87 cf
701.02	Source:	LEHIGH NORTHEAST CEMENT CO - GLENSFALLS, NY							
	Brand Name:	Type I/II							
Cement Type III:				Specific Gravity				lb/cy	0.00 cf
701.04	Source:								
	Brand Name:								
Blended Cement:				Specific Gravity				lb/cy	0.00 cf
701.06	Source:								
	Brand Name:								
Cement with Slag:				Specific Gravity				lb/cy	0.00 cf
701.07	Source:								
	Brand Name:								
Pozzolan:				Specific Gravity				lb/cy	0.00 cf
725.03(a)	Source:								
	Brand Name:								
Fly Ash:				Specific Gravity	2.340		141	lb/cy	0.97 cf
725.03(a)	Source:	HEADWATERS RESOURCES - BRAYTON POINT, MA							
	Brand Name:	Class F							
Silica Fume:				Specific Gravity				lb/cy	0.00 cf
725.03(b)	Source:								
	Brand Name:								
Slag:				Specific Gravity				lb/cy	0.00 cf
725.03(c)	Source:								
	Brand Name:								
Water					31.5	gals	262.87	lb/cy	4.21 cf
Air Content Target					7.0	%			1.89 cf
Coarse Aggregate 3/8"			Absorption	0.40	Specific Gravity	2.800	1400	lb/cy	8.01 cf
704.02A	Source:	CARRARA JP - N CLARENDON, VT							
Coarse Aggregate 3/4"			Absorption		Specific Gravity			lb/cy	0.00 cf
704.02B	Source:								
Coarse Aggregate 1 1/2"			Absorption		Specific Gravity			lb/cy	0.00 cf
704.02C	Source:								
Fine Aggregate:			Absorption	1.50	Specific Gravity	2.650	1497	lb/cy	9.05 cf
704.01	Source:	PIKE IND PIT - DANBY, VT			Fineness Modulus	2.73			
Air Entrainment Admixture					Specific Gravity	1.000	0.6	oz/cy	
725.02(b)	Source:	W.R. GRACE & CO. - CAMBRIDGE, MA							
	Brand Name:	Darex II							
Retarder Admixture:					Specific Gravity	1.000	7	oz/cwt	
725.02(c)	Source:	W.R. GRACE & CO. - CAMBRIDGE, MA							
	Brand Name:	Recover							
High Range Water Reducer Admixture:					Specific Gravity	1.000	15	oz/cwt	
725.02(h)	Source:	W.R. GRACE & CO. - CAMBRIDGE, MA							
	Brand Name:	Adva 405							
Other Admixtures:									
					Specific Gravity				0.00 cf
	Source:								
	Brand Name:								
					Specific Gravity				0.00 cf
	Source:								
	Brand Name:								
					Specific Gravity				0.00 cf
	Source:								
	Brand Name:								
					TOTAL	49.290	3864.9	lb	27.00 cf

Maximum Water/Cementitious Ratio	0.44			
Maximum Water (gal/cy)	37.2			
Spread Min/Max (inch)	20.0	min	28.0	max
Air Content Min/Max (%)	5.5	min	8.5	max
Design Unit Wt. (lb/cf)	143.14			

Notes:

Sand = 1550 lbs / cy

PRECAST / READY-MIX CONCRETE

J. P. CARRARA & SONS, INC

CONCRETE CONTRACTORS

ARCHITECTURAL / STRUCTURAL PRECAST CONTRACTORS

2464 Case Street
MIDDLEBURY, VT 05753
TEL (802) 388-6363
FAX (802) 388-9010

CROWN POINT, NY 12928
TEL (518) 597-3680

RT 7 SO.
NO. CLARENDON, VT 05701
TEL (802) 775-2301
FAX (802) 775-1048

CONCRETE MIX DESIGN

DATE :	February 6, 2015					
PROJECT :	Rutland City BRF 3000(16) - Drilled Shaft Caisson w/ SCC			STATE:	VT	
ENGINEER :						
CONTRACTOR :						
CONCRETE SUPPLIER :	J.P. Carrara & Sons, Inc., No. Clarendon, VT					$G_{s,\ SSD}$
CEMENT SOURCE & TYPE :	Lehigh Type I-II					3.15
FLY ASH SOURCE & CLASS:	Headwaters Resources - Class F - Brayton Point					2.33
COARSE AGGREGATE(1):	J.P. Carrara & Sons, Inc., No. Clarendon, VT	Rutland 3/8"		ABS =	0.40%	2.800
FINE AGGREGATE :	J.P. Carrara & Sons, Inc., No. Clarendon, VT	Pike Sand		ABS =	1.50%	2.650
AIR ENTRAINING AGENT :	W.R. Grace Darex II					
HYDRATION STABILIZER:	Recover					
SELF-CONSOLIDATING ADMIX:	W.R. Grace Adva 405		Extended Slump Life HRWR			
VISCOSITY MODIFIER:	Sika Stabilizer 4R		Not Required; Dosed as needed for stability			

QUANTITIES PER CUBIC YARD

Identification # :

Mix Description :

									Yield
SPECIFICATIONS REQUIREMENT,	28	Day Strength (psi)	4,000	705 # Total Cementious Material (CM)					
Lehigh Type I-II		(lbs)	564						2.87
Fly Ash, Class F (FA)		(lbs)	141	20% by weight of CM					0.97
Rutland 3/8"		(lbs)(SSD)	1400	47% by weight of total agg.					8.01
Pike Sand		(lbs)(SSD)	1550	53% by weight of total agg.					9.37
WATER (gallons) : (Maximum Water =	37.2	gal.+ CI)	31.5						4.21
W/CM RATIO (lbs/lb) : (Max W/CM =	0.44	)	0.37						
W.R. Grace Darex II	(2-20 range)	(oz/yd^3)	0.6	7.0%	+ / --	1.5%	(5.5%-8.5%)		1.89
Recover	(0-6 range)	(oz/cwt)	7.0						
W.R. Grace Adva 405	(14-24 range)	(oz/cwt)	15.0	24"	spread	+ / --	4"		
Sika Stabilizer 4R	(0-7 range)	(oz/cwt)	0.0	Not Required; Dosed as needed for stability					
									27.3

Mix Properties:	Min Paste Vol.	Max Unit Wt (#/ft^3)
	36.4%	145.5

Prepared By: Benjamin L. Cota, Production Engineer

J. P. CARRARA & SONS, INC

CONCRETE CONTRACTORS

ARCHITECTURAL / STRUCTURAL PRECAST CONTRACTORS

TRIAL BATCH REPORT

Project: Rutland City BRF 3000(16) - Drilled Shaft Caisson w/ SCC

Date: February 5, 2015

Batch Size: **54** cubic feet

1.9765

CF = 7.05

% Moisture, Fine Aggregate:	**4.50%**	137.86
% Moisture, Intermediate Agg:	**0.00%**	0.00
% Moisture, Coarse Aggregate:	**1.00%**	27.67
Total Free Moisture in Aggregate, Lbs:		165.54

Material Quantities:

	Wt., Lbs		Add 1	Add 2	Notes		
Lehigh Type I-II	1,115						
Fly Ash, Class F (FA)	279						
Rutland 3/8"	2,795						
Pike Sand	3,201						
Water, Lbs	354	42.4 Gal			Total =	354	Lbs
	Vol., oz				w/c =	0.373	
W.R. Grace Darex II	1.19				doseage =	0.09	oz/cwt
Recover	97.54				doseage =	7.00	oz/cwt
W.R. Grace Adva 405	209.02				doseage =	15.00	oz/cwt
						Lbs of Water	
Sika Stabilizer 4R					doseage =		oz/cwt

Test Results:

	9:30am		10:30am		11:30am		12:30pm
	Test 1	Test 2	Test 3	Test 4	Test 5	Test 6	Test 7
Ambient Temperature, °F:	18	18	18	18	17	17	16
Concrete Temperature, °F:	55	52	50	50	48	45	41
Air Content %	8.1						
Slump/Spread, in	26	26	26	26	25	24	23
J-Ring	25	25	25	25	24	23	22

	1:00pm		2:00pm		3:00pm		4:00pm
	Test 8	Test 9	Test 10	Test 11	Test 12	Test 13	Test 14
Ambient Temperature, °F:	16	16	16	16	16	15	14
Concrete Temperature, °F:	41	40	40	40	40	38	38
Air Content %							
Slump/Spread, in	17	9	7	5.5	5	4.5	3
J-Ring	16						

Prepared By: _____

Benjamin L. Cota, Production Engineer

,ehigh Northeast Cement Company

Lehigh Northeast Cement Company

313 Warren Street, PO Box 440
Glens Falls, NY USA 12801
Office Phone #: 1-(518)-792-1137
Toll-Free Office Phone #:1-(800)-833-4157
Fax Phone #:1-(518)-792-0731 (fax)

Mill Test Report

Plant Location: Glens Falls., NY
Mill Test Date: 10/1/2014

Cement Type: **Type I/II**
Mill Test Month: Sep-14

ASTM C 114	Test Results Results	ASTM C150 / AASHTO M 85 TYPE II Specifications
Silicon Dioxide (Si_2O_3), %	20.07	
Aluminum Oxide (Al_2O_3), %	3.94	6.0 Max
Iron Oxide (Fe_2O_3), %	3.88	6.0 Max
Calcium Oxide (CaO), %	64.53	
Magnesium Oxide (MgO), %	2.14	6.0 Max
Sulfur Trioxide (SO_3), %	2.80	3.0 Max*
Loss on Ignition (LOI), %	1.82	3.0 Max
Insoluble Residue, %	0.47	0.75 Max
Total Alkalies [Na_2O + 0.658*K_2O] (%):	0.62	0.60 Max
Tri-Calcium Silicate [C_3S] (%):	70.27	
Tri-Calcium Aluminate [C_3A] (%):	3.86	8 Max
C_3S +4.75*C_3A <=100	88.6	100 Max
ASTM C186 Heat of Hydration 7 Day (cal/g)	83.3	
Date Heat of Hydration Performed	4/24/2014	
CO_2 (%)	1.60	
Limestone Addition (%):	3.92	5.0 Max
$CaCO_3$ in Limestone (%)	95.3	70 Min

PHYSICAL REQUIREMENTS

Blaine Fineness ASTM C 204 (m^2/kg):	3813	280 Min/ 420Max* (* AASTHO Only)
325-Mesh Sieve Retained ASTM C 430(%):	5.35	
Time of Setting Vicat - Initial Set ASTM C 191 (min):	119	45 Min
Time of Setting Vicat - Final Set ASTM C 191 (min):	235	375 Max
Air Content ASTM C 185 (%):	5	12 Max
Paste False Set ASTM C 451 (%):	68.0	
Soundness-Autoclave Expansion ASTM C 151(%):	-0.02	0.80 Max
Expansion in Water ASTM C 1038 (%):	0.002	0.020 Max
Normal Consistency ASTM C 187 (%):	25	
Compressive Strengths 1 Day ASTM C109 (psi):	2626	
Compressive Strengths 3 Day ASTM C109 (psi):	4172	1450 Min
Compressive Strengths 7 Day ASTM C109 (psi):	4663	2470 Min
Compressive Strengths 28 Day ASTM C109 (psi):	5491	

Hermanus Potgieter

Hermanus Potgieter, Quality Control Manager

The above test results are representative of cement from which the shipment was made.

The cement complies with the requirements of ASTM C 150 and AASHTO M 85 specifications.

Note *: ASTM and AASHTO refer to footnote "d" in cases where the optimum SO3 (using ASTM C 563) of a particular cement is close to or in excess of the limit in this specification. In such cases where properties of a cement can be improved by exceeding the SO3 limits in the table, it is permissible to exceed the limits provided it is demonstrated by ASTM C 1038 that the cement with the increased SO_3 will not develop expansion exceeding 0.020% at 14 days. The optimum SO3 for GFLCC Type I/II cement exceeds the limit and therefore the ASTM C 1038 results are provided above

HEADWATERS RESOURCES

ASTM C618 / AASHTO M295 Testing of Brayton Point Fly Ash

Sample Type: 3200-ton **Report Date:** 11/11/2014

Sample Date: 9/16 - 9/29/14 **MTRF ID:** 2104BP

Sample ID:

Chemical Analysis			ASTM / AASHTO Limits Class F	Class C	ASTM Test Method
Silicon Dioxide (SiO2)	58.16	%			
Aluminum Oxide (Al2O3)	27.28	%			
Iron Oxide (Fe2O3)	5.43	%			
Sum of Constituents	90.87	%	70.0% min	50.0% min	D4326
Sulfur Trioxide (SO3)	0.17	%	5.0% max	5.0% max	D4326
Calcium Oxide (CaO)	1.44	%			D4326
Magnesium Oxide (MgO)	1.14	%			
Sodium Oxide (Na2O)	0.71	%			
Potassium Oxide (K2O)	2.58	%			
Moisture	0.07	%	3.0% max	3.0% max	C311
Loss on Ignition	2.62	%	6.0% max 5.0% max	6.0% max 5.0% max	C311 AASHTO M295
Available Alkalies, as Na2O **When required by purchaser**	0.82	%	not required 1.5% max	1.5% max	C311 AASHTO M295
Physical Analysis					
Fineness, % retained on #325	20.91	%	34% max	34% max	C311, C430
Strength Activity Index - 7 or 28 day requirement					C311, C109
7 day, % of control	82	%	75% min	75% min	
28 day, % of control	94	%	75% min	75% min	
Water Requirement, % control	98	%	105% max	105% max	
Autoclave Soundness	-0.01	%	0.8% max	0.8% max	C311, C151
Density	2.33				C604

The strength activity index is not to be considered a measure of the compressive strength of concrete containing the fly ash.

Headwaters Resources certifies that pursuant to current ASTM C618 protocol for testing, the test data listed herein was generated by applicable ASTM methods and meets the requirements of ASTM C618.

Doug Rhodes, CET
Facility Manager

AAP SM
AASHTO R18

Materials Testing & Research Facility
2650 Old State Highway 113
Taylorsville, Georgia 30178
P: 770.684.0102
F: 770.684.5114
www.headwaters.com

WR Grace Company

W. R. Grace & Co.-Conn.
62 Whittemore Avenue
Cambridge, MA 02140

T 617-498-4555
F 617-234-7576
E Denise.i.white@grace.com
W www.graceconstruction.com

April 6, 2011

J P Carrara & Sons
2464 Case Street, Rte. 116
Middlebury, Vermont 05753

Project Name: All

This is to certify that **DAREX® II AEA**, an air-entraining admixture, as manufactured and supplied by Grace Construction Products, W. R. Grace & Co.-Conn., is formulated to comply with the Standard Specification for Air-Entraining Admixtures for Concrete, ASTM C 260 (AASHTO M 154).

DAREX II AEA does not contain calcium chloride or chloride containing compounds as a functional ingredient. Chloride ions may be present in trace amounts contributed from the process water used in the manufacturing.

GRACE

Denise White
Technical Service Support

WR Grace Company

W. R. Grace & Co.-Conn.
62 Whittemore Avenue
Cambridge, MA 02140

T 617-498-4555
F 617-234-7576
E Denise.i.white@grace.com
W www.graceconstruction.com

April 6, 2011

J P Carrara & Sons
2464 Case Street, Rte. 116
Middlebury, Vermont 05753

Project Name: All

This is to certify that **ADVA® 405**, a high-range, water-reducing admixture, as manufactured and supplied by Grace Construction Products, W. R. Grace & Co.-Conn., is formulated to comply with the Standard Specification for Chemical Admixtures for Concrete, ASTM C 494, Type F (AASHTO M 194, Type F) and complies with the Standard Specification for Chemical Admixtures for Use in Producing Flowing Concrete, ASTM C 1017.

ADVA 405 does not contain calcium chloride or chloride containing compounds as a functional ingredient. Chloride ions may be present in trace amounts contributed from the process water used in the manufacturing.

GRACE

Denise White
Technical Service Support

WR Grace Company

W. R. Grace & Co.-Conn.
62 Whittemore Avenue
Cambridge, MA 02140

T 617-498-4555
F 617-234-7576
E Denise.i.white@grace.com
W www.graceconstruction.com

April 6, 2011

J P Carrara & Sons
2464 Case Street, Rte. 116
Middlebury, Vermont 05753

Project Name: All

This is to certify that **RECOVER®**, a hydration stabilizer, as manufactured and supplied by Grace Construction Products, W. R. Grace & Co.-Conn., is formulated to comply with Standard Specification for Chemical Admixtures for Concrete, ASTM C 494, Type D (AASHTO M 194, Type D).

RECOVER does not contain calcium chloride or chloride containing compounds as a functional ingredient. Chloride ions may be present in trace amounts contributed from the process water used in the manufacturing.

GRACE

Denise White
Technical Service Support

WR Grace Company

W. R. Grace & Co.-Conn.
62 Whittemore Avenue
Cambridge, MA 02140

T 617-498-4556
F 617-234-7578
E Denise.i.white@grace.com
W www.graceconstruction.com

April 6, 2011

J P Carrara & Sons
2464 Case Street, Rte. 116
Middlebury, Vermont 05753

Project Name: All

This is to certify that **DAREX® II AEA**, an air-entraining admixture, as manufactured and supplied by Grace Construction Products, W. R. Grace & Co.-Conn., is formulated to comply with the Standard Specification for Air-Entraining Admixtures for Concrete, ASTM C 260 (AASHTO M 154).

DAREX II AEA does not contain calcium chloride or chloride containing compounds as a functional ingredient. Chloride ions may be present in trace amounts contributed from the process water used in the manufacturing.

GRACE

Denise White
Technical Service Support

WR Grace Company

W. R. Grace & Co.-Conn.
62 Whittemore Avenue
Cambridge, MA 02140

T 617-498-4555
F 617-234-7576
E Denise.i.white@grace.com
W www.graceconstruction.com

April 6, 2011

J P Carrara & Sons
2464 Case Street, Rte. 116
Middlebury, Vermont 05753

Project Name: All

This is to certify that ADVA® 405, a high-range, water-reducing admixture, as manufactured and supplied by Grace Construction Products, W. R. Grace & Co.-Conn., is formulated to comply with the Standard Specification for Chemical Admixtures for Concrete, ASTM C 494, Type F (AASHTO M 194, Type F) and complies with the Standard Specification for Chemical Admixtures for Use in Producing Flowing Concrete, ASTM C 1017.

ADVA 405 does not contain calcium chloride or chloride containing compounds as a functional ingredient. Chloride ions may be present in trace amounts contributed from the process water used in the manufacturing.

GRACE

Denise White
Technical Service Support

WR Grace Company

W. R. Grace & Co.-Conn.
62 Whittemore Avenue
Cambridge, MA 02140

T 617-498-4555
F 617-234-7576
E Denise.l.white@grace.com
W www.graceconstruction.com

April 6, 2011

J P Carrara & Sons
2464 Case Street, Rte. 116
Middlebury, Vermont 05753

Project Name: All

This is to certify that **DARATARD® 17**, a Water-Reducing and Retarding, as manufactured and supplied by Grace Construction Products, W. R. Grace & Co.-Conn., is formulated to comply with the Standard Specification for Chemical Admixtures for Concrete, ASTM C 494, Type D (AASHTO M 194, Type D).

DARATARD 17 does not contain calcium chloride or chloride containing compounds as a functional ingredient. Chloride ions may be present in trace amounts contributed from the process water used in the manufacturing.

GRACE

Denise White
Technical Service Support

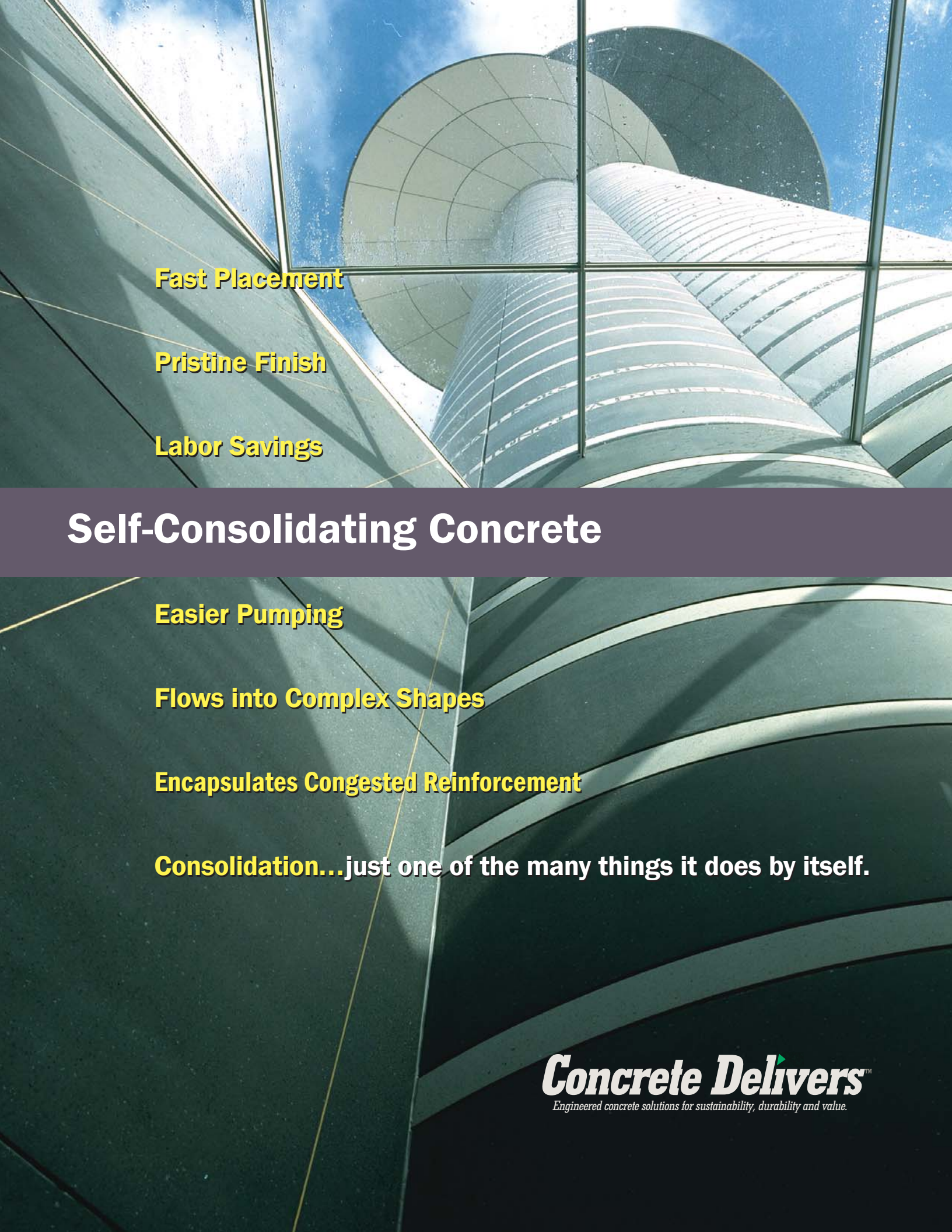

Fast Placement

Pristine Finish

Labor Savings

Self-Consolidating Concrete

Easier Pumping

Flows into Complex Shapes

Encapsulates Congested Reinforcement

Consolidation…just one of the many things it does by itself.

Concrete Delivers™

Engineered concrete solutions for sustainability, durability and value.

Self consolidating concrete (SCC), also known as self-compacting concrete, is a highly flowable, non-segregating concrete that can spread into place, fill formwork and encapsulate even very congested reinforcement, without any mechanical vibration. As a high-performance concrete, SCC delivers these attractive benefits while maintaining all of concrete's customary mechanical properties and durability characteristics.

SCC's unique properties give it significant economic, constructability, aesthetic and engineering advantages. SCC is an increasingly attractive choice for optimizing site manpower by reduction of labor and possibly skill level, lowering noise levels and allowing for a safer working environment. SCC allows easier pumping - even from bottom up, flows into complex shapes, transitions and inaccessible spots and minimizes voids around embedded items to produce a high degree of homogeneity and uniformity. That's why SCC allows for optimized concrete sections and shapes, denser reinforcement and greater freedom of design while producing superior surface finishes and textures.

SCC's economic benefits are built-in.

Labor and time-to-completion are significant components of any job's economic picture. Since SCC flows easily, self-levels with minimal consolidation, placement is quick and easy, saving placement time, vibration equipment and time, labor and equipment wear and tear. SCC's potential high early form stripping strength and smooth finish mean faster turnaround and minimal cosmetic repairs and a positive impact on maintaining projects on schedule. By eliminating the need for consolidation, SCC results in fewer safety and noise concerns and costs.

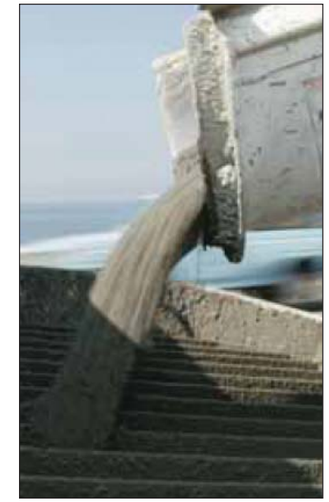

SCC's economic advantages are greatest when high strength is an existing prerequisite.

Consolidation is just one of the great things self-consolidating concrete does by itself.

SCC delivers significant engineering benefits.

As an engineered concrete, SCC offers characteristics that engineers value. Improved constructability to produce homogeneous and uniform concrete allows for higher reliability in design assumptions. Engineering properties and their inter-relationships remain unchanged from those of conventional concrete and any differences are adequately addressed by conservatism in the design codes. The principles of concrete durability with respect to reduced permeability, resistance to freezing and thawing and sulfate attack, alkali-aggregate reactions, thermal stresses and corrosion protection of reinforcement also apply similarly to SCC. SCC's superior rheology allows for the design and construction of complex shapes with congested reinforcement, and its non-segregating qualities are important for deep-section or long-span applications. The fluidity of SCC can be engineered in terms of its viscosity - both rate and degree of flow - to allow for a wider variety of placement and construction means and methods.

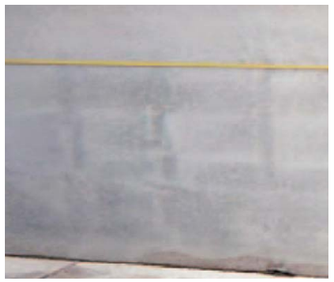

SCC (above) results in nearly zero surface defects, especially when compared to standard concrete (below).

"It's hard to believe that such a difficult concrete pour was completed with such ease"

Concrete Superintendent

SCC gives architects more design flexibility.

SCC's unique characteristics give architects much more flexibility for vertical and horizontal applications. SCC's flowability allows for more complex and aesthetic concrete design features. Unlimited opportunities exist with innovative options for color and texture of exposed surfaces. Perhaps most importantly, SCC produces exposed surfaces that are virtually defect free, allowing concrete's beauty to shine

SCC: A high-performance concrete innovation.

SCC's flowability is generally achieved by using polycarboxylate-based high-range water-reducing (HRWR) admixtures and optimized concrete ingredients while maintaining a low mixing water content in the concrete. SCC's stability, or resistance to segregation of the plastic concrete mixture, is achieved by using mineral fillers or fines and/or by using viscosity modifying admixtures.

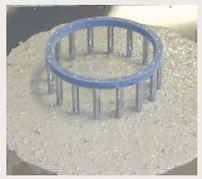

Find out for yourself why SCC works wonders.

Next time you have a job that calls for the considerable economic, aesthetic, engineering or design benefits of self-consolidating concrete make sure it's at the top of your list. To learn more, visit www.SelfConsolidatingConcrete.org.

SCC solves difficult problems: Because of a lack of overhead clearance, SCC was pumped from the bottom into these 101' tall, 28" wide, steel-reinforced columns.

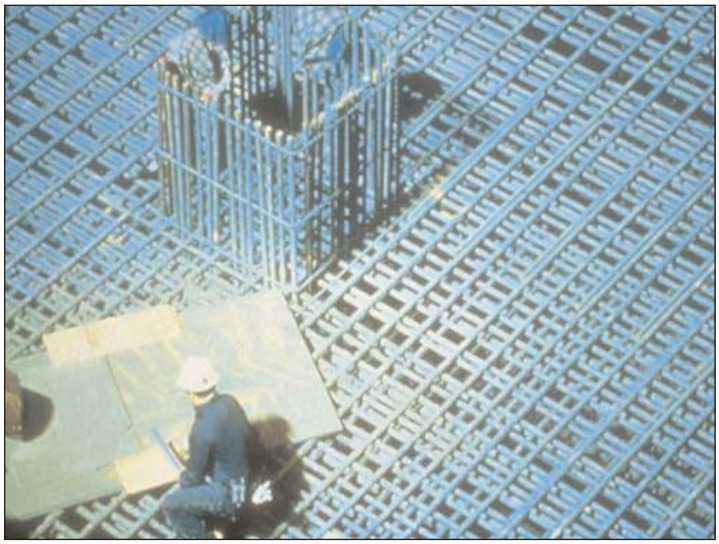

SCC offers advantages when heavy reinforcement is involved: SCC's rheological characteristics allow it to flow easily through congested reinforcement.

Self Consolidating Concrete Delivers Efficiency, Beauty, Savings and More.

Economic Benefits

- Fast placement without vibration or other forms of mechanical consolidation
- Reduced equipment wear
- Labor savings
- Easier placement over any distance or constraints
- Accelerate project schedules
- Reduced noise, safety and environmental concerns

Engineering and Architectural Benefits

- Improves constructability
- Virtually flawless finish
- Homogeneous and uniform concrete
- Flows easily into complex shapes and through congested reinforcement
- Allows for innovative architectural features
- Superior strength and durability

Concrete Delivers™

Engineered concrete solutions for sustainability, durability and value.

www.SelfConsolidatingConcrete.org • www.NRMCA.org
www.ConcreteBuildings.org • www.ConcreteHelp.org

This publication is intended for the use of professional personnel, competent to evaluate the significance and limitations of its content, and who will accept responsibility for the application of the material it contains. The National Ready Mixed Concrete Association and the other organizations cooperating in the preparation of this publication strive for accuracy but disclaim any and all responsibility for application of the stated principles or for the accuracy of the sources. Unless otherwise indicated, all materials on these pages are copyrighted by the National Ready Mixed Concrete Association or cooperating organizations. All rights reserved. Therefore, reproduction, modification or retransmission, in any form is strictly prohibited without prior written permission from the National Ready Mixed Concrete Association. © 2007 National Ready Mixed Concrete Association

NRMCA®

Count on Concrete

National Ready Mixed Concrete Association • 900 Spring Street, Silver Spring, MD 20910 • 888-84-NRMCA • www.nrmca.org

Putzmeister

42Z-METER | TRUCK-MOUNTED CONCRETE BOOM PUMP

A NEW STANDARD OF INNOVATION AND EXCELLENCE

YOU TALK. WE LISTEN. 42Z-METER DELIVERS.

Designed with the operator in mind, the new Putzmeister 42Z delivers greater payload capacity, and longer pump life to increase job site performance.

Weighing in at 66,000 pounds and with thirty percent more deck space, there is plenty of capacity for job site equipment, water and fuel, as well as space to comfortably move around the deck.

The pedestal sub-frame bolt connections make the frame more flexible to adjust to torsion from pump force, minimizing cracking and providing longer pump life.

No matter how challenging the task or difficult the constraints of the job site, the Putzmeister 42Z's improved lightweight design is maneuverable and efficient under almost any condition.

2

DO MORE FOR LESS

3

HIGHLY EFFICIENT HYDRAULIC OIL SYSTEM

The hydraulic system on the 42Z-Meter has an improved filtration system, uses less oil and has fewer parts. Cleaner oil improves pump functioning and reduces maintenance intervals.

4

IMPROVED PIPE LAYOUT

Improved pipe layout, with single bend in turret and only two elbow sizes — 45-degree and 90-degree — increases parts commonality and reduces wear.

5

FLEXIBLE PEDESTAL

By improving the pedestal construction with a bolt connection and simplifying the turret design, you can count on less down time and lower maintenance costs.

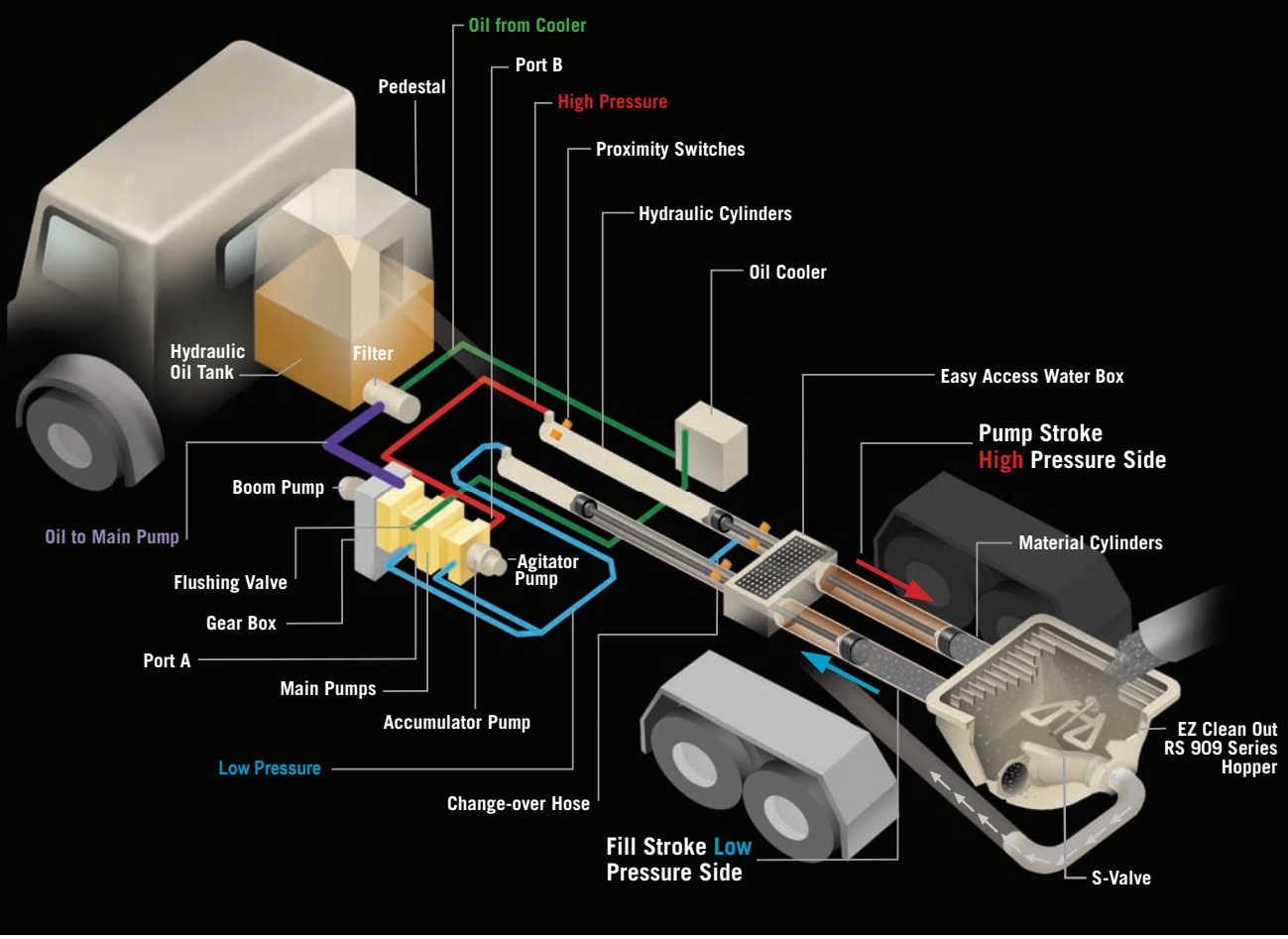

FREE FLOW HYDRAULICS IN A CLOSED LOOP SYSTEM

The pumps at the heart of Putzmeister's free flow pumping system are bi-directional, variable displacement piston pumps. Depending on stroke, oil flows in a closed loop from either port A or port B on the pump to the hydraulic cylinders.

Depending on the specific pump cell size, up to 20% of the oil leaves the simple closed loop system during each stroke through a flushing valve on the main pump and cycles to a cooler before it returns to the hydraulic oil tank.

Unlike an open loop system, the oil flows freely without passing through any unnecessary valves that can generate heat. Thus, the closed loop requires far less oil to run the system, as a larger reservoir is not necessary to cool all of the oil. In addition, return oil can be cycled directly through the main kidney filter instead of going back to the tank, keeping it in the filtered state preferred by the hydraulic components for long life and dependable operation.

Speed and timing are also critical to superior performance. Quicker and more responsive than a hydraulic signal, the electrical system on a Putzmeister pump minimizes the time it takes to change direction at stroke end. An electrical signal precisely synchronizes the drive cylinders with the accumulator system that controls the S-Valve in the hopper. Reserved energy stored in a nitrogen bladder is sent as a supercharged blast of oil at precisely the right moment to facilitate a smooth and fast shift of the S-Valve from one position to another.

KEY ADVANTAGES OF PUTZMEISTER'S FREE FLOW HYDRAULICS

- Changes in material pressure in the delivery line are reduced to ensure smooth pumping and a consistent concrete flow.
- The intelligent design minimizes wear-inducing pressure peaks, increases service life and makes our pumps extremely powerful.
- Rapid change-over of the stroke means higher outputs, a smoother flow of concrete and less boom bounce.
- There is greater pump output due to the efficient use of all available energy.

42Z-METER | TRUCK-MOUNTED CONCRETE BOOM PUMP STANDARD FEATURES

BOOM

- 136' 6" (41.60m) vertical reach
- Low unfolding height
- Versatile 5-section Z-Fold boom
- Manual lubrication, optional auto lubrication
- Integrated work lights

BOOM OPERATION AND CONTROL

- Fully proportional HBC radio remote
- Smooth and precise boom positioning at greater distances
- Fully proportional remote with 130' 0" (40m) cable
- Gauge Port Central (GPC)
- Modular Boom Controls (MBC)
- 24V electrical system

DELIVERY LINE

- Equipped with 5" (125mm) twin-pipe delivery line on all boom sections providing efficient concrete delivery
- ESSER 900 twin-pipe deck pipe with 900 turret elbow
- Bolt-on easy lift-out brackets for simple delivery line replacement
- Standardized 45˚ and 90˚ elbows and straight pipe sections
- Improved pipe layout reduces pipe wear
- Common component availability and easy replacement

PEDESTAL

- Rotation bearing and access openings simplify turret pipe changes
- Sub-frame's bolted connections absorb all forces
- Easy access large single-suction filter with indicator gauge
- Efficient hydraulic oil system
- Condensation trap in the hydraulic tank for water collection
- Increased deck space and payload capacity for pipe and hose storage
- Manual lubrication, optional auto lubrication
- Side-mounted aluminum toolboxes
- Integrated work lights
- Breakaway rear steps

OUTRIGGERS

- Two-part outriggers for easy maintenance
- Quick setup on restrictive job sites
- Fully hydraulic outriggers with integral cylinders
- "X" brace outrigger system
- Front outriggers extend diagonally out and down
- Rear outriggers swing out and extend down
- Four outrigger pads in two side compartments
- Bubble level indicators
- Optional auxiliary fuel tank
- One-Sided Support (OSS) system featuring a 120˚ working range

CONCRETE PUMP

- Ergonic® Pump System (EPS) with color Ergonic Graphic Display (EGD)
- Choose from high pressure or high volume with the same setup
- Free flow hydraulic system for smooth, controllable pumping
- Multi-piece piston cup design
- Hard-chromed material cylinders
- Redundant proximity sensor system with function indicators
- Fully adjustable volume control for very slow pumping with full concrete pressure and boom speed
- Modular pump control box

EZ CLEAN OUT RS 909 HOPPER

- Large 19.4 ft^3 (550L) capacity
- Hard-faced remixer paddle
- Grate-mounted vibrator
- Multi-piece grate featuring bolted connections
- Hopper grate RFID safety switch
- Hinged splash guard covers hopper during transit
- Lower hopper height allows easy discharge from ready mix truck
- Automatic lubrication
- Integrated work lights

S-VALVE

- Ideal for high pressure applications and harsh mixes
- Hard-faced S-Valve
- Gradual 9" to 7" (230 to 180mm) reduction
- Thick-walled valve construction
- Lasting wear over years of use

CLEAN OUT

- Fast and easy clean out
- 406 psi (28 bar) hydraulically-driven water pump
- Wash out kit and hose
- Integrated 185 gallon (700L) water tank

Putzmeister PRO-VANTAGE® WARRANTY PLAN

The PRO-VANTAGE® Waranty Plan extends the converage on all Putzmeister BSF boom pumps for a total of 36 months or 6,600 hours at no extra charge. Domestic only.

BETTER BOOM DESIGN 7

Putzmeister's "smart design" boom incorporates welding seams below the edge of maximum stress. The new 42Z rectangle boom design minimizes boom bounce, and is easier for the hoseman to maneuver. The boom features more straight pipe for a less stressful concrete flow and longer wear on parts. The Z-Fold configuration handles space-restrictive areas and can pump even when the boom is not fully extended. Optimized for the greatest maneuverability and flexibility available, resulting in a larger operational range.

CONVENIENCE AND CONTROL 8

The Frequency Hopping system on the standard HBC proportional radio remote ensures minimal interference with other frequency transmitters. Radiomatic Power Boost further enhances reception quality with a 50-100% increase in signal power. A fully proportional cable remote is also standard. Unlike other remote control systems, the radio and cable remote systems are independent, offering redundancies to ensure proportional operation with either the radio or cable remote.

RS 909 HOPPER 9

Putzmeister's robust, yet lightweight EZ Clean Out RS 909 hopper is engineered for performance and durability. Offering 19.4 ft^3 (550L) capacity, the hopper uses one hard-faced remixer paddle motor and grate-mounted vibrator. The multi-piece grate features bolted connections that allow for easy maintenance. An innovative RFID safety switch incorporated in the hopper disables the machine when the grate is opened.

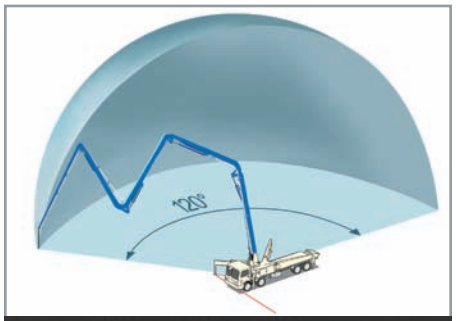

ONE-SIDED SUPPORT (OSS) SYSTEM 10

For enhanced job site versatility, Putzmeister's unique OSS system allows the operator to reduce the outrigger extension on one side of the unit to create a smaller overall machine footprint. Utilizing a series of sensors, OSS enables the unit to maintain a defined and safe 120 degree working envelope on space restrictive sites that demand a larger boom.

ERGONIC® PUMP CONTROL SYSTEM (EPS) 11

The computer-aided EPS constantly monitors and regulates the operation of the concrete pump and truck engine. The electronic regulation of this system means the pump always runs at peak performance. EPS results in more productivity and greater efficiency with less for the operator to worry about. The color Ergonic Graphic Display (EGD) provides EPS monitoring from one convenient location.

BOLT CONNECTIONS 12

From pedestal construction and flatpack connections to pipe hanger brackets and hopper grate, many of the critical wear areas have been improved with bolt connections. Simplifying the design and allowing for torsion forces to easily pass through, the bolt connections provide extended service life and easier maintenance.

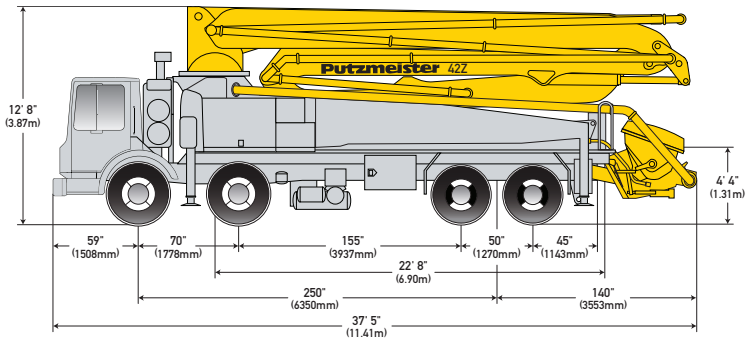

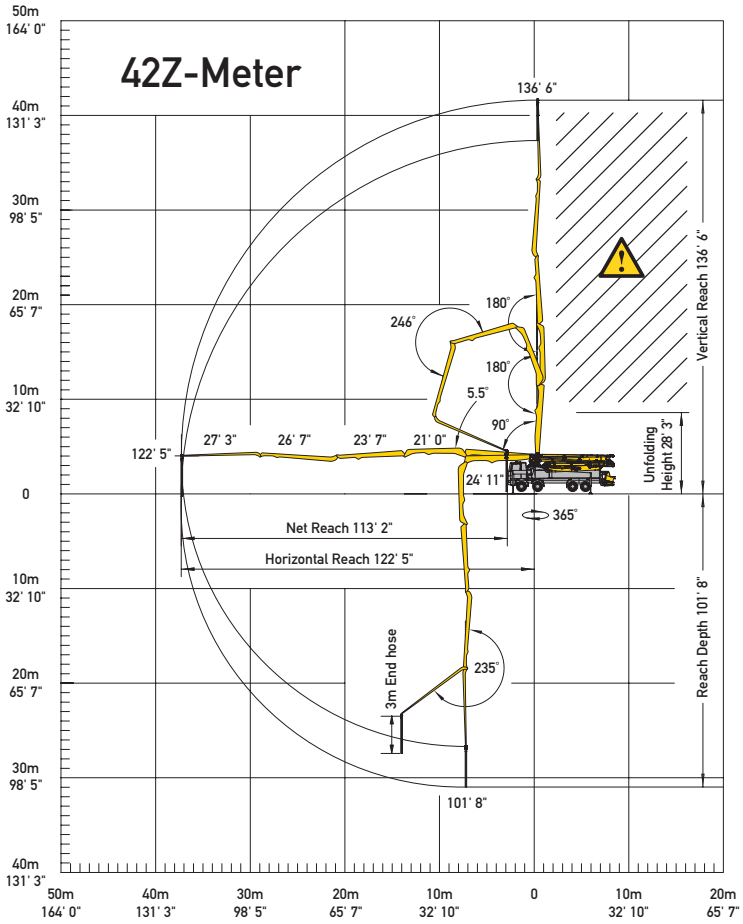

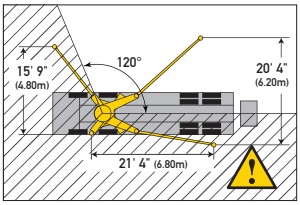

With one-sided support (OSS) 120°

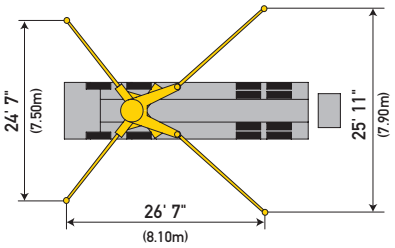

End hose not to be operated in caution area.

Photos and drawings are for illustrative purposes only.

42Z-METER TRUCK-MOUNTED SPECIFICATIONS

Length	37' 5"	(11.41m)
Width	8' 2"	(2.50m)
Height	12' 8"	(3.87m)
Wheelbase	250"	(6,350mm)
Front axle weight	29,991 lbs	(13,604kg)
Rear axle weight	36,274 lbs	(16,454kg)
Approx total weight	66,265 lbs	(30,058kg)

Based on Model MACK MRU 613 with .16H pump cell.
Weights are approximate and include pump, boom, truck, driver and some fuel. Varies with options selected.
Dimensions will vary with different truck makes, models and specifications.

BOOM SPECIFICATIONS | Z-FOLD DESIGN

Height & Reach		
Vertical reach	136' 6"	(41.60m)
Horizontal reach	122' 5"	(37.30m)
Reach from front of truck*	113' 2"	(34.50m)
Reach depth	101' 8"	(31.00m)
Unfolding height	28' 3"	(8.60m)
5-Section Boom		
1st section articulation	90°	
2nd section articulation	180°	
3rd section articulation	180°	
4th section articulation	246°	
5th section articulation	235°	
1st section length	24' 11"	(7.60m)
2nd section length	21' 0"	(6.40m)
3rd section length	23' 7"	(7.20m)
4th section length	26' 7"	(8.10m)
5th section length	27' 2"	(8.30m)
General Specs		
Pipeline Size (ID) metric ends	5"	(125mm)
Rotation	365°	
End hose — length	10' 0"	(3.00m)
End hose — diameter	5"	(125mm)
Outrigger spread L - R — front hydraulically extend out & down	24' 7"	(7.50m)
Outrigger spread L - R — rear hydraulically swing out & extend down	25' 11"	(7.90)

PUMP SPECIFICATIONS		42Z.16H	42Z.20H
Output	— rod side	210 yd^3/hr (160m^3/hr)	—
	— piston side	146 yd^3/hr (112m^3/hr)	260 yd^3/hr (200m^3/hr)
Pressure	— rod side	1,233 psi (85 bar)	—
	— piston side	1,885 psi (130 bar)•	1,233 psi (85 bar)
Material cylinder diameter		9" (230mm)	11" (280mm)
Stroke length		83" (2,100mm)	83" (2,100mm)
Max strokes per minute			
	— rod side	31	—
	— piston side	21	26
Volume control		0-Full	0-Full
Vibrator		Standard	Standard
Hard-chromed material cylinders		Standard	Standard
Hydraulic system		Free Flow	Free Flow
Hydraulic system pressure		5,075 psi (350 bar)	5,075 psi (350 bar)
Differential cylinder diameter		5.5" (140mm)	5.5" (140mm)
Rod diameter		3.1" (80mm)	3.1" (80mm)
Maximum size aggregate		2.5" (63mm)	2.5" (63mm)
Water tank— pedestal		185 gal (700L)	185 gal (700L)

Maximum theoretical values listed.
* Applies to units mounted on PMA stock truck — MACK MRU 613
• Standard delivery line system rated at max line pressure of 1,233 psi (85 bar)

Authorized Distributor

QUALITY SYSTEM CERTIFIED ISO 9001:2008

Putzmeister

Putzmeister America, Inc.
1733 90th Street
Sturtevant, WI 53177 USA

Phone (262) 886-3200
Toll-free (800) 884-7210
Fax (262) 884-6338

PutzmeisterAmerica.com
pmr@putzam.com

© Putzmeister America, Inc. 2013
Printed in the USA (1.51303)

RAISED END COUPLINGS, 2–BOLT

CF 2–Bolt Coupling – Hevi–Duty Configuration

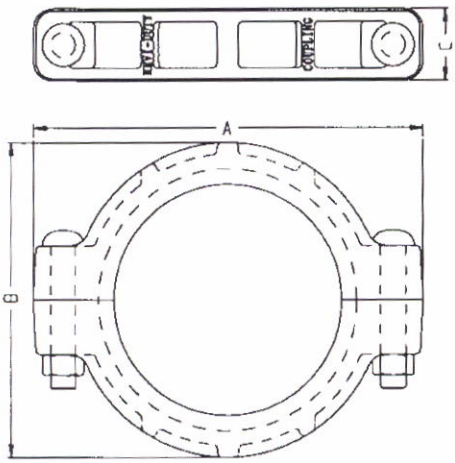

Product Description: CF Hevi–Duty 2–Bolt Coupling assembly. Consists of a two piece ductile iron casting, captive rubber gasket and suitable nuts and bolts to secure the coupling halves together.

Casting material: Ductile (nodular) iron, grade 65–45–12 as specified in ASTM A536–80. Minimum Tensile=65,000 PSI, Minimum Yield=45,000 PSI, Elongation=12%

Gasket Material: Buna N, Nitrile, NBR ASTM D–2000 classification: 2BF620A14B14E034F17. Service Temp=35°F to 180°F.

Bolt: Hex Head or Track Bolt, as required

Nut: Full Hex Nut, 2 ea., as required

Working Pressure: see chart

Burst Pressure: see chart

PART #	SIZE	DIM A	DIM B	DIM C	WEIGHT
C30BBD	3"	8.13	5.62	2.00	8.0
C40BBD	4"	9.25	7.00	2.25	11.5
* C50BBD	5"	10.62	8.37	2.25	13.8
C60BBD	6"	12.00	9.50	2.25	17.0
C70BBSD	7"	15.13	10.75	2.00	41.0
C80BBD	8"	17.00	12.75	2.43	41.0
C100BBD	10"	19.75	14.58	2.50	49.0
C120BBD	12"	23.12	17.06	2.50	65.0

Vanex Tube Corporation

301 McKees Lane
Niles, Ohio 44446

Certifications

Customer XX CONSTRUCTION FORMS P.O. 21478 M.O. 47825

Description 5.236" OD RD X .120" WALL HR EWT - F.C. .010"
15/30C - 30/1.00MN - ASTM-A-513
PT# T-65012-2 AND T-65012-1

MELTING: USA
MFG: USA

Chemical Analysis

Heat Number	Carbon	Manganese	Phosphorus	Sulphur	Aluminum	Silicon					
120703	19	46	010	007							

Mechanical Properties

Heat Number	Yield Strength P.S.I.	Tensile Strength P.S.I.	Elongation Percent	Hardness R_B
120703	49,612	60,417	29%	

MAY

G. Morse
5-4-07

Sworn to and subscribed before me this _____ day of _____, _____
_____ Notary Public. My commission expires _____, _____

Cory Rapp 5/18/07

LAY DOWN SYSTEM

STEEL PLACING LINE FOR HIGH-RISE AND LINE PUMPING APPLICATIONS

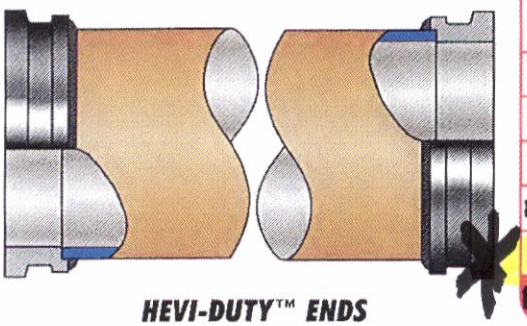

HEVI-DUTY™ ENDS

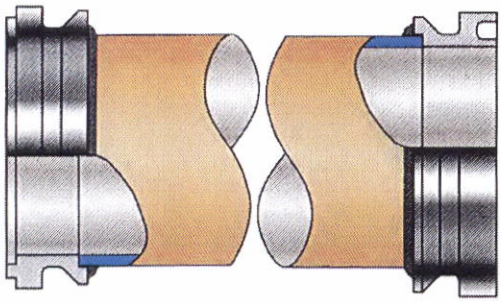

SCHWING MALE / FEMALE

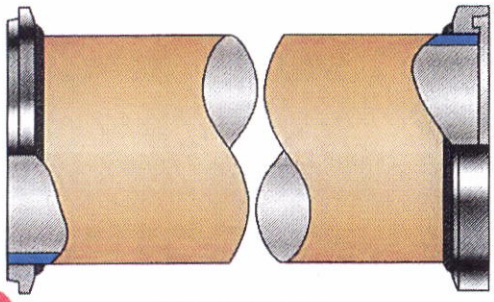

PUTZMEISTER ZX MALE / FEMALE

Lay down System

11 GAUGE (NOMINAL) .120" / 3mm

I.D. in/mm	Length (in./mm)	Shipping Weight (lbs. / Kg.)	Part Number Non-Hardened
2.0/50.8	120/3048	29 / 13	T2011A10D
2.5/63.5	120/3048	32 / 15	T2511A10D
3.0/76	120/3048	43 / 20	T3011A10D
4.0/102	120/3048	55 / 25	T4011A10D
5.0/125	120/3048	67 / 30	T5011A10D

Other end types available.
Other lengths are available upon request. Consult factory.

9 GAUGE (NOMINAL) .150" / 3.8mm

I.D. in/mm	Length (in./mm)	Shipping Weight (lbs. / Kg.)	Part Number Non-Hardened
4.0/102	120/3048	68 / 31	T4009A10D
5.0/125	120/3048	82 / 37	T5009A10D
6.0/152	120/3048	99 / 45	T6009A10D

Other end types available.
Other lengths are available upon request. Consult factory.

7 GAUGE (NOMINAL)

.188 / 4.8mm Wall

I.D. in/mm	Length (in./mm)	Shipping Weight (lbs. / Kg.)	Part Number Hardened	Part Number Non-Hardened
4.84/123	120/3048	105 / 48	-	T5007A10D
4.84/123	120/3048	109 / 50	T5007A10DH	-
6.0/152	120/3048	127 / 58	-	T6007A10D

Other end types available.
Other lengths are available upon request. Consult factory.

.250" / 6.35mm Wall

I.D. in/mm	Length (in./mm)	Shipping Weight (lbs. / Kg.)	Part Number Hardened	Part Number Non-Hardened
3.0/76	120/3048	89 / 40	-	T3025A10D
4.0/102	120/3048	116 / 53	T4025A10DH	T4025A10D
5.0/125	120/3048	140 / 64	T5025A10DH	T5025A10D

Other end types available.
Other lengths are available upon request. Consult factory.

.312" / 7.9mm Wall

I.D. in/mm	Length (in./mm)	Shipping Weight (lbs. / Kg.)	Part Number Hardened	Part Number Non-Hardened
6.0/153	120/3048	215 / 98	T6031A10DH	T6031A10D

Other end types available.
Other lengths are available upon request. Consult factory.

.500" / 12.7 mm Wall

I.D. in/mm	Length (in./mm)	Shipping Weight (lbs. / Kg.)	Part Number Hardened	Part Number Non-Hardened
5.0/125	120/3048	297 / 135	T5050A10DH	T5050A10D

Other end types available.
Other lengths are available upon request. Consult factory.

OTHER RECOMMENDED COMPONENTS FOR A PLACING LINE SYSTEM

- Heavy wall placing elbows
- Reducers
- Couplings
- Gaskets
- Valves
- Support brackets

For additional information or to place an order, please call **800.223.3676**

Part	Wall	Pipe	Burst		Working Pressure / Safety Factor						Actual	
Number	thickness	I.D.	Pressure		2 to 1		3 to 1		4 to 1		Test Pressure	Date
			psi	Bar	psi	Bar	psi	Bar	psi	Bar	PSI	
T1540A10D	3.68mm	40.89 mm	7937	547	3969	274	2646	182	1984	137		
T1580A10D	5.08mm	38.1mm	10947	755	5474	377	3649	252	2737	189		
T2011A10D	3.0 mm	51 mm	5547	382	2774	191	1849	127	1387	96	4900	Mar-10
T2025A10D	6.35mm	50.8 mm	12400	855	6200	427	4133	285	3100	214	9000	Mar-10
T2511A10D												
T3011A10D	3.0 mm	76 mm	3840	265	1920	132	1280	88	960	66	4400	Mar-10
T4011A10D	3.0 mm	102 mm	2936	202	1468	101	979	67	734	51	3600	Mar-10
T5011A10D	3.0 mm	127 mm	2383	164	1192	82	794	55	596	41	2900	Feb-11
T3025A10D	6.35 mm	76 mm	8857	611	4429	305	2952	204	2214	153	>8000	Mar-10
T4025A10D	6.35 mm	102 mm	6888	475	3444	237	2296	158	1722	119	>8000	Mar-10
T4009A10D	3.8 mm	100 mm	3670	253	1835	127	1223	84	918	63	5300	Mar-10
T5009A10D	3.8 mm	125 mm	2979	205	1490	103	993	68	745	51		
T6009A10D	3.8 mm	152.4 mm	2496	172	1248	86	832	57	624	43		
T5007A10D	4.6 mm	123 mm	3514	242	1757	121	1171	81	879	61	4050	Mar-10
T5007A10DH	4.9 mm	123 mm	6678	460	3339	230	2226	153	1670	115	6900	Mar-10
T5025A10D	6.35 mm	127 mm	4727	326	2364	163	1576	109	1182	81	>8000	Mar-10
T5025A10DH	6.35 mm	127 mm	7091	489	3545	244	2364	163	1773	122	>8000	Mar-10
TR4826	6.63 mm	123.26 mm	6181	426	3091	213	2060	142	1545	107		
TR4826-H	6.63 mm	123.26 mm	9272	639	4636	320	3091	213	2318	160		
T5050A10D	12.7 mm	127 mm	9538	658	4769	329	3179	219	2385	164	>8000	Mar-10
T5050A10DH	12.7 mm	127 mm	14307	986	7154	493	4769	329	3577	247	>8000	Mar-10
T6031A10D	7.9 mm	152 mm	5840	403	2920	201	1947	134	1460	101	6600	Mar-10
T6031A10DH	7.9 mm	152 mm	8760	604	4380	302	2920	201	2190	151	>8000	Mar-10

CARBON STEEL PIPE

ALL STEEL stocks the ASTM, API and A-500 Grades in shedules 5's through XXHY's.
ALL STEEL supplies pipe in black, galvanized, bare, plain end and threaded and coupled material.

Nominal	O.D./in.	Schedule	Wall/in.	Wt./Ft.	Std. XH; XXH
1/8"	0.405	40	.068	.24	STD
		80	.095	.31	XH
1/4"	0.540	40	.088	.43	STD
		80	.119	.54	XH
3/8"	0.675	40	.091	.57	STD
		80	.126	.74	XH
1/2"	0.840	40	.109	.85	STD
		80	.147	1.09	XH
		160	.188	1.31	
			.294	1.71	XXH
3/4"	1.050	40	.113	1.13	STD
		80	.154	1.47	XH
		160	.219	1.94	
			.308	2.44	XXH
1"	1.315	40	.133	1.68	STD
		80	.179	2.17	XH
		160	.250	2.84	
			.358	3.66	XXH
1-1/4"	1.660	40	.140	2.27	STD
		80	.191	3.00	XH
		160	.250	3.77	
			.382	5.22	XXH
1-1/2"	1.900	40	.145	2.72	STD
		80	.200	3.63	XH
		160	.281	4.86	
			.400	6.41	XXH
2"	2.375	40	.154	3.65	STD
		80	.218	5.02	XH
			.344	7.46	
			.436	9.04	XXH
2-1/2"	2.875	40	.203	5.79	STD
		80	.276	7.66	XH
		160	.375	10.01	
			.552	13.71	XXH
3"	3.500		.125	4.51	
			.156	5.57	
			.188	6.65	
		40	.216	7.58	STD
			.250	8.68	
			.260	9.03	
		80	.300	10.26	XH
		160	.438	14.32	
			.600	18.58	XXH
3-1/2"	4.000		.125	5.17	
			.156	6.40	
			.188	7.65	
		40	.226	9.11	STD
			.250	10.01	
			.281	11.16	
		80	.318	12.50	XH
4"	4.500		.125	5.84	
			.156	7.24	
			.188	8.66	
			.219	10.01	
		40	.237	10.79	STD
			.250	11.35	

Nominal	O.D./in.	Schedule	Wall/in.	Wt./Ft.	Std. XH; XXH
4"	4.500		.281	12.66	
			.312	13.96	
		80	.337	14.98	XH
		120	.438	19.00	
		160	.531	22.51	
			.674	27.54	XXH
5"	5.563		.156	9.01	
			.188	10.79	
			.219	12.50	
		40	.258	14.62	STD
			.281	15.85	
			.312	17.50	
			.344	19.17	
		80	.375	20.78	XH
		120	.500	27.04	
		160	.625	32.96	
			.750	38.55	XXH
6"	6.625		.188	12.92	
			.219	14.98	
			.250	17.02	
		40	.280	18.97	STD
			.312	21.04	
			.344	23.08	
			.375	25.03	
		80	.432	28.57	XH
		120	.562	36.39	
		160	.719	45.35	
			.864	53.16	XXH
8"	8.625		.188	16.94	
			.203	18.26	
			.219	19.66	
		20	.250	22.36	
		30	.277	24.70	
			.312	27.70	
		40	.322	28.55	STD
			.344	30.42	
			.375	33.04	
		60	.406	35.64	
			.438	38.30	
		80	.500	43.39	XH
		100	.594	50.95	
		120	.719	60.71	
		140	.812	67.76	
			.875	72.42	XXH
		160	.906	74.69	
10"	10.750		.188	21.21	
			.203	22.87	
			.219	24.63	
		20	.250	28.04	
			.279	31.20	
		30	.307	34.24	
			.344	38.23	
		40	.365	40.48	STD
			.438	48.24	
		60	.500	54.74	XH
		80	.594	64.43	
		100	.719	77.03	
		120	.844	89.29	
		140	1.000	104.13	XXH
		160	1.125	115.64	

GeoVISION™

Borehole Video Systems

www.AlleghenyInstruments.com
Jeff.Hoffer@AlleghenyInstruments.com
800·255·1353 - 540·396·4740

Standard Plastic Cameras

Video Camera
Color-GS-0008
B&W-GS-0009

The GeoVISION™ Standard Plastic Color and Black & White cameras are a great economical choice when the conditions are right. Standard Plastic cameras are designed for use in two-inch (5 cm) and larger diameter bores up to 1,000 feet (300 meters) deep. These cameras are more sensitive to heat than Standard Stainless Steel cameras, and cannot be stored or operated in environments hotter than 110° F (43° C). They can be used alone or mounted on a Pan-Tilt Control for easy joystick manipulation.

The Standard Plastic cameras have standard NTSC resolution with an aspect ratio of 4:3. Illumination is provided by eight high intensity white LEDs. Standard Plastic cameras are rated for use up to 500 psi and can be used with Light-Duty, Heavy-Duty and Deluxe winches.

Standard Plastic cameras have a mounting screw near the front of the camera for attaching accessories such as a side-looking mirror or a ball compass. In shallow wells, these cameras can be connected to a pipe-string providing an economical way to pan and tilt the camera from the surface.

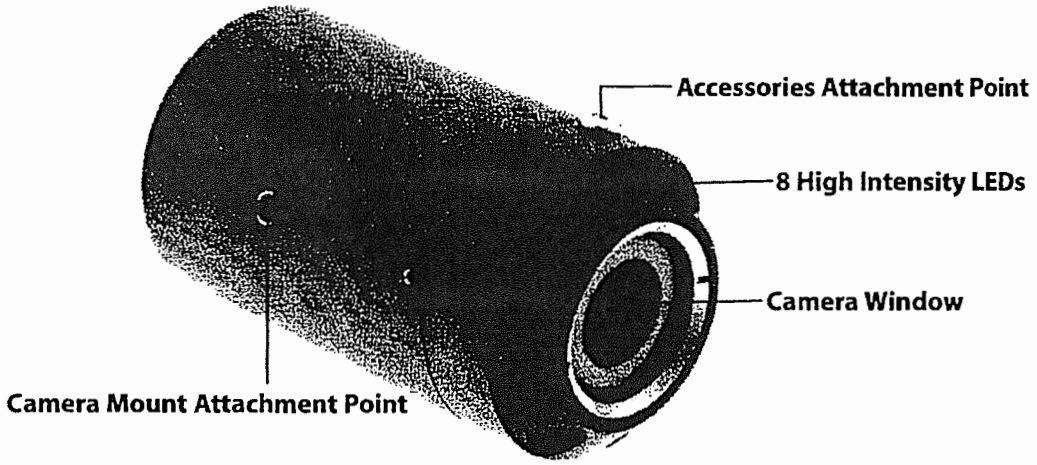

Allegheny Instruments, Inc. · 1243 Burnsville Road · Williamsville, VA · 24487 · USA

Specifications:
Standard Plastic Color Camera

Weight	4.5 Ounces
Dimensions	3-3/8" long x 1-5/8" diameter (8.6 cm x 4.1 cm)
Standard Lens	2.97 mm
Angle of View (in air)	~130°
Aperture	F2.0
CCD	1/3" Sony Super HAD CCD II
Video Format	NTSC
Horizontal Resolution	550 Lines
Effective Pixels	768 Horizontal x 494 Vertical
Minimum Illumination	0.05 Lux.
Operating Temperature	-40° F ~ 110° F (-40° C~43° C)
Light Source	8 High Intensity White LEDs
Maximum Depth	1000 Feet Underwater (300 meters)
Maximum Pressure	500 psi
Current Draw	120 mA
Window Material	Glass
Exposure Control	No

Standard Plastic Black and White Camera

Weight	4.5 Ounces
Dimensions	3-3/8" long x 1-5/8" diameter (8.6 cm x 4.1 cm)
Standard Lens	3.6 mm
Angle of View (in air)	~92°
Aperture	F2.0
CCD	1/3" Sony ExView B/W CCD II
Video Format	NTSC
Aspect Ratio	4:3
Horizontal Resolution	420 Lines
Effective Pixels	510 Horizontal x 492 Vertical
Minimum Illumination	0.0003 Lux.
Operating Temperature	-40° F ~ 110° F (-40° C~43° C)
Light Source	8 High Intensity White LEDs
Maximum Depth	1000 Feet Underwater (300 meters)
Maximum Pressure	500 psi
Current Draw	160 mA
Window Material	Glass
Exposure Control	No

Compatibility

Products	Notes:
Winch	
Deluxe	Maximum cable length is 1,000 feet (300 meters).
Heavy-Duty	
Light-Duty	
Cable Length	
325 feet (100 meters)	Deluxe, Heavy-Duty or Light-Duty winch.
650 feet (200 meters)	Deluxe or Heavy-Duty winch.
1,000 feet (300 meters)	Deluxe or Heavy-Duty winch.

Accessories

Additional Lights
Auxiliary Single Light
Auxiliary Double Light
Auxiliary Fixed Eight Light
Auxiliary Adjustable Eight Light
Camera Mounted Options
Pan-Tilt Control
Compass
Fixed Mirror

Allegheny Instruments, Inc. · 1243 Burnsville Road · Williamsville, VA · 24487 · USA

CHOOSE A LANGUAGE:
English

GeoVISION BORE HOLE CAMERA SYSTEMS

Home » Standard Plastic

GeoVISION™ Standard Plastic Cameras

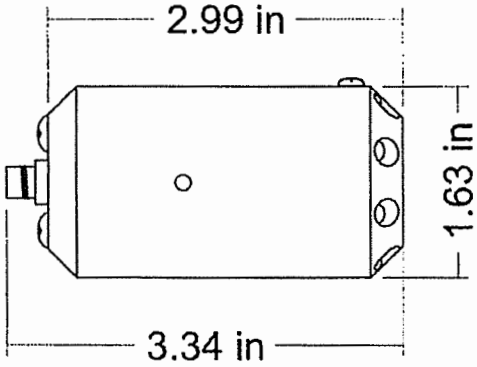

OVERVIEW SPECS ACCESSORIES COMPATIBILITY

The GeoVISION™ Standard Plastic Color and Black & White cameras are a great economical choice when the conditions are right. Standard Plastic cameras are designed for use in two-inch (5 cm) and larger diameter bores, up to 1,000 feet (300 meters) deep. These cameras are more sensitive to heat than Standard Stainless Steel cameras, and cannot be stored or operated in environments hotter than 110° F (43° C). They can be used alone, or mounted on a Pan-Tilt Control for easy joystick manipulation.

The Standard Plastic cameras have standard NTSC resolution with an aspect ratio of 4:3. Illumination is provided by eight high intensity white LEDs. Standard Plastic cameras are rated for use up to 500 psi and can be used with Light-Duty, Heavy-Duty and Deluxe winches.

Standard Plastic cameras have a mounting screw near the front of the camera for attaching accessories such as a side-looking mirror or a ball compass. In shallow wells, these cameras can be connected to a pipe-string providing an economical way to pan and tilt the camera from the surface.

More Photos

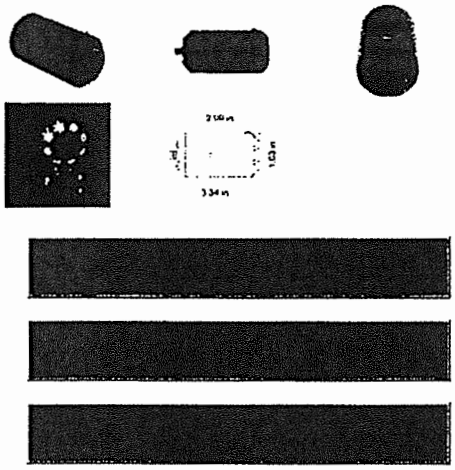

ALLEGHENY INSTRUMENTS, INC. ©2012 | Privacy Policy

Web Design & Content Management System by Cambium Group, LLC

35

GeoVISION, Jr.™ Econo Light-Duty & Heavy- Duty

BOREHOLE VIDEO SYSTEMS

MODEL # GVLDECONOM1 & # GVHDECONOM1

OWNER'S MANUAL

(READ THIS MANUAL BEFORE USING THE SYSTEM)

MARKS PRODUCTS, INC.
1243 BURNSVILLE RD.
WILLIAMSVILLE, VA 24487
(800) 343-3479(540) 396-4740
FAX: (540) 396-4741

36

FIG. #1

GeoVISION Jr ™ ECONO LIGHT-DUTY SYSTEM HOOK-UP DIAGRAM

(SEE FIGS. 21 & 22 FOR OPTIONAL 5" B/W & 5.6" LCD MONITOR HOOK-UP)

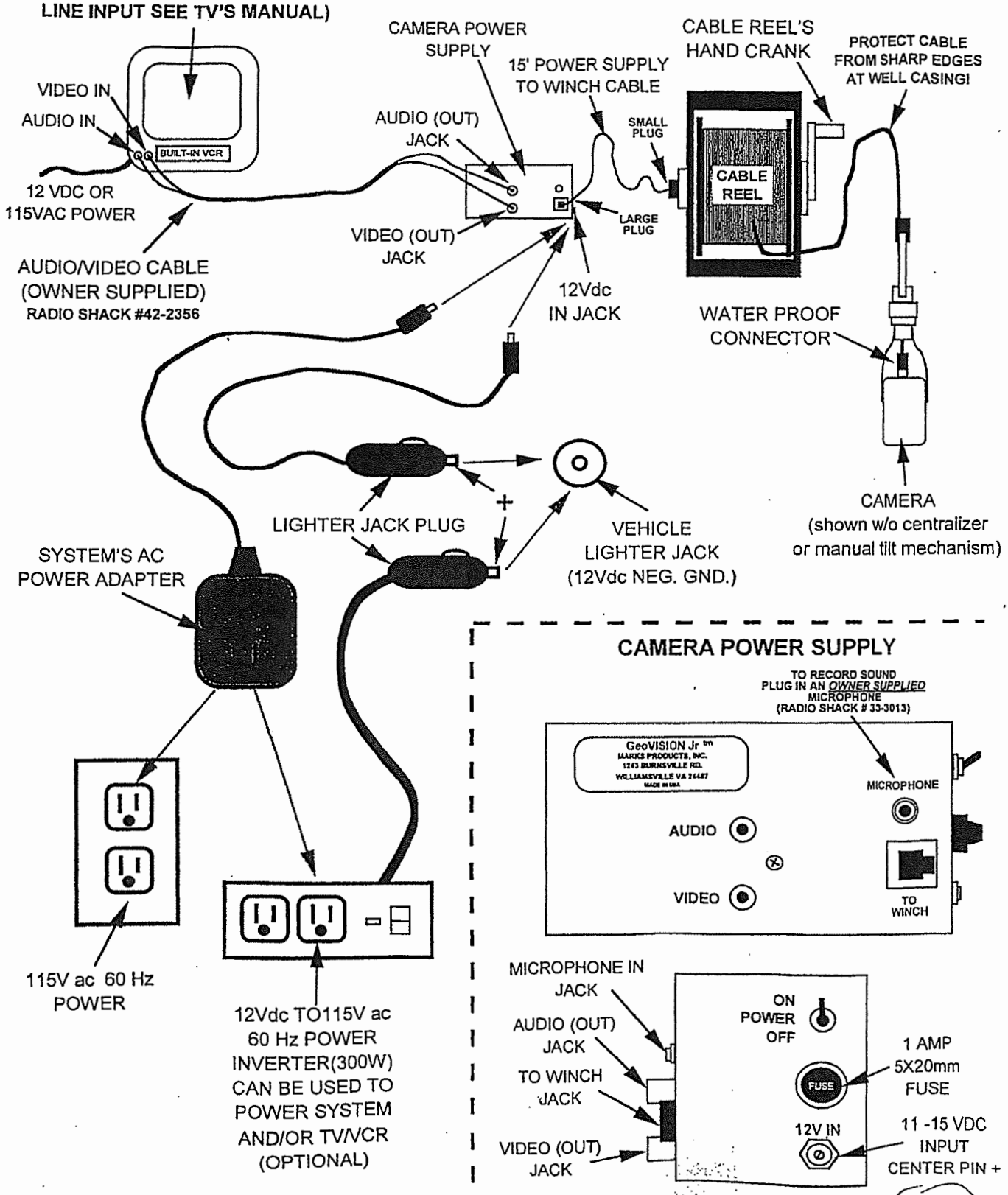

FIG. #2

GeoVISION Jr™ CAMERA WITH CENTRALIZER ATTACHMENT

(SHOWN WITHOUT TILT HEAD ATTACHMENT)
THIS CONFIGURATION WILL FIT INTO 2" BORE

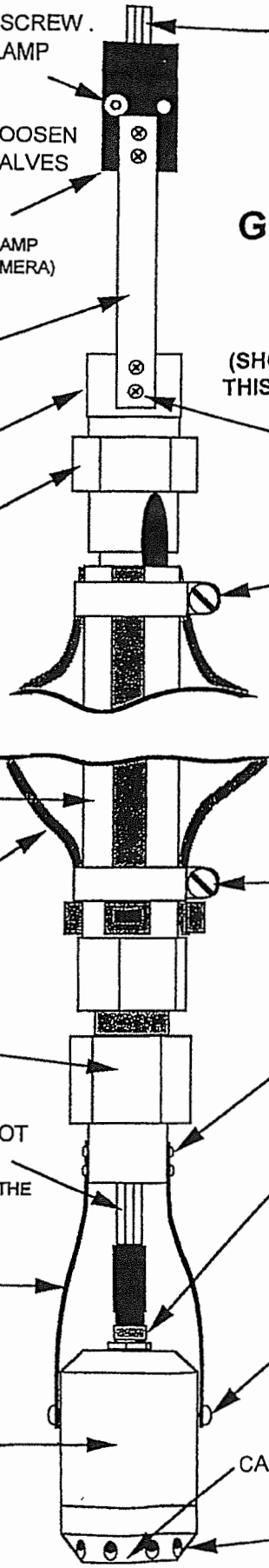

FIG. #3A

CAMERA HEAD WITH TILTING ATTACHMENT SIDE VIEW

(ALSO SEE FIG. #3B)

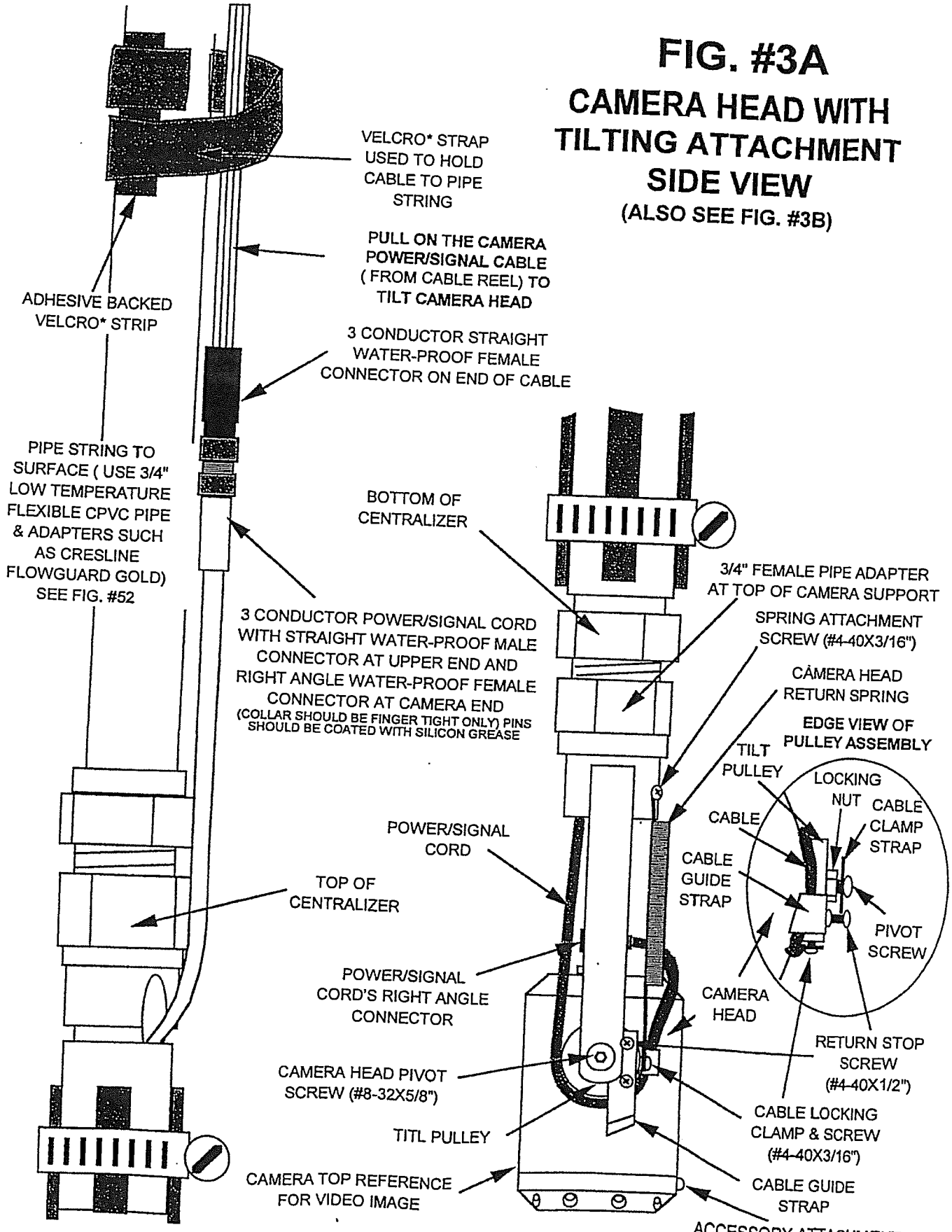

* VELCRO is a registered trademark of VELCRO USA, INC.

FIG. #3B
CAMERA WITH SUPPORT AND TILT-HEAD ATTACHMENT (SEE FIG. #3A)

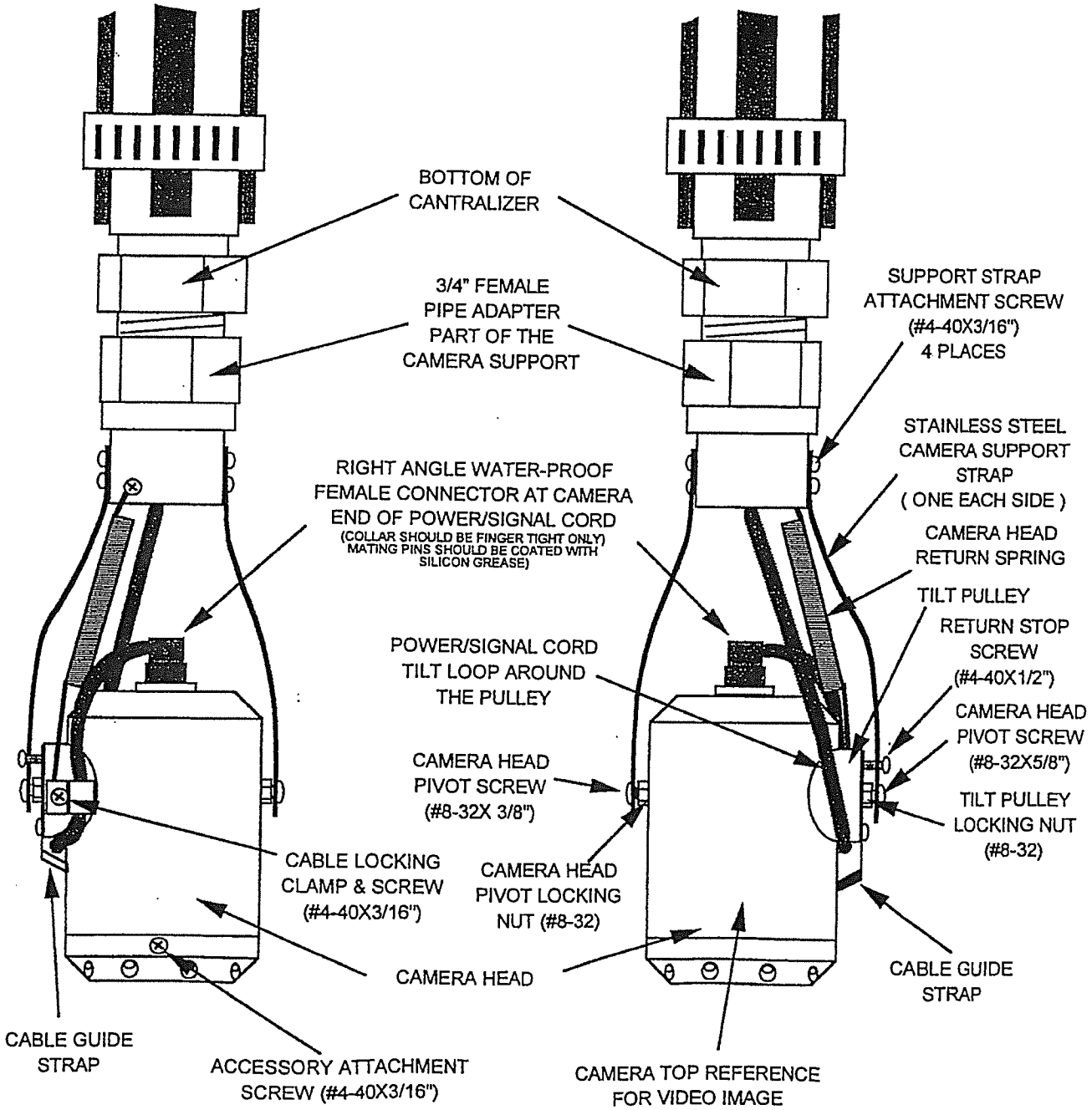

BOTTOM OF CAMERA VIEW

TOP OF CAMERA VIEW

FIG. #4

SUPPORTING CAMERA W/O CENTRALIZER AND TILTING ATTACHMENT

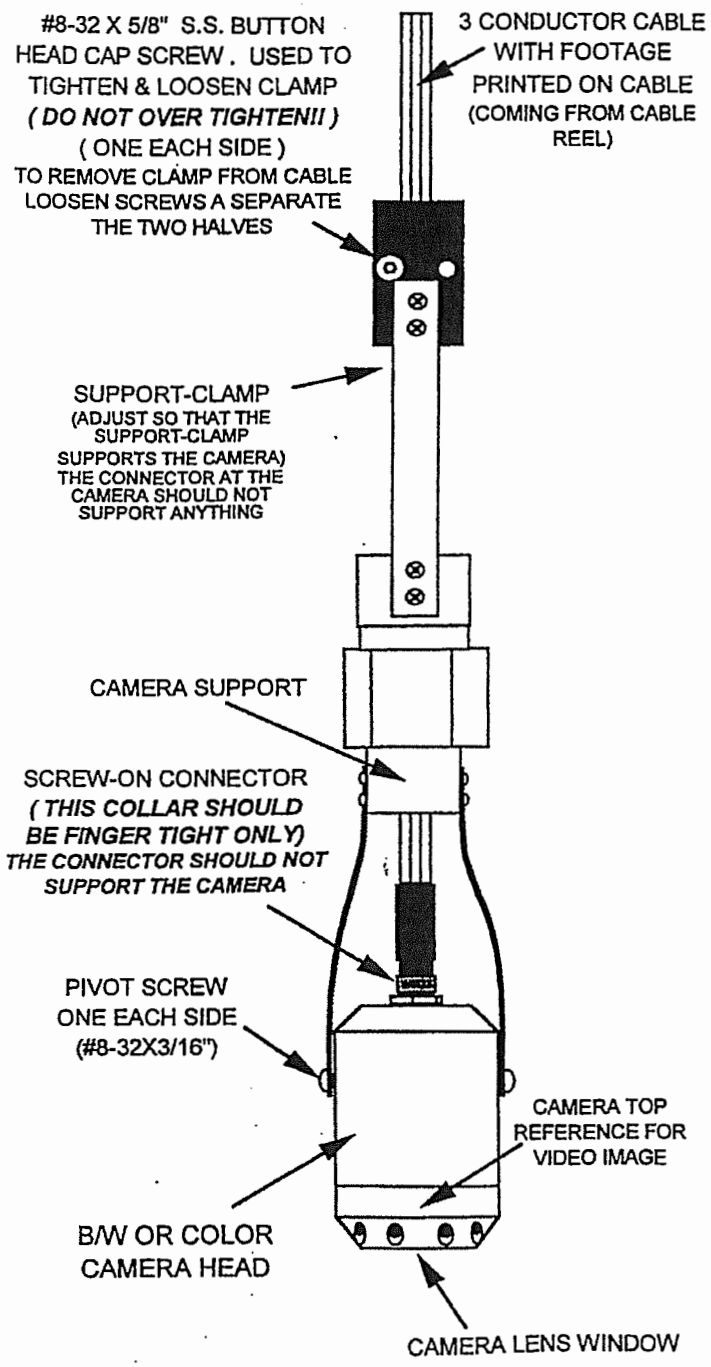

FIG. #5

CAMERA HOUSING FRONT VIEW

(W/O TILTING ATTACHMENT)

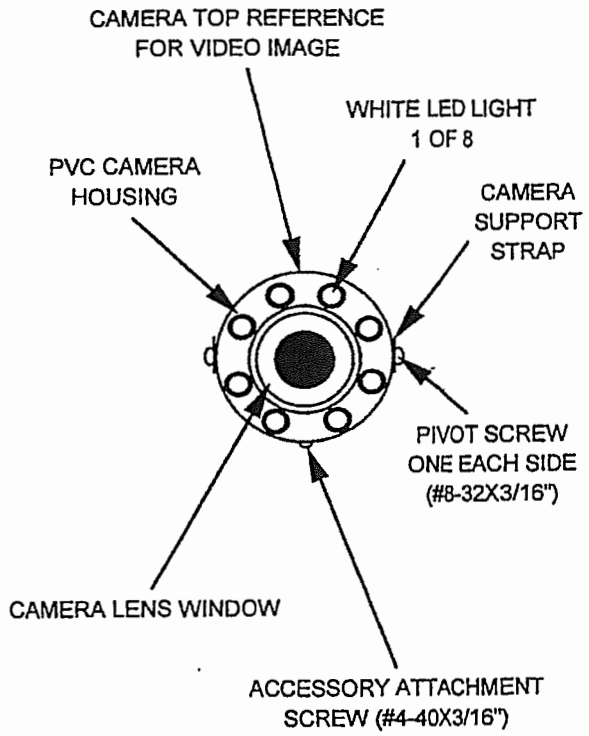

Buffalo Drilling Company, Inc. (*BDC*) Concrete Core Retrieval - Revised

Summary: It is the intention of *BDC*, if needed, to mobilize to the site one of the drill rigs noted in Attachments 12b, 12c, 12d, or 12e and use it in conjunction with the NX core barrel depicted in Attachment 12f or use the Alternate Manual Coring Method outlined below under Item C for shallow (usually less the 20 feet deep) core investigations.

A) Drill Rigs

BDC will mobilize a drill rig to the site along with all required drill tools, water tank, pump, and core boxes for storage and transport of retrieved concrete cores. One of the four drill rigs noted will be used for coring operations. *Kubricky Construction Corp.* (*KCC*) will provide access to the caisson for BDC's coring, through the construction of ramps, pads, and/or the moving of dowels that may pose as obstructions.

B) Coring the Concrete

BDC will then core the concrete using the NX core barrel and/or the directions of the engineer. Cores will be labeled for depth, caisson number, core location, and core number, placed into a wooden core box, and given to *KCC* for delivery to the EIC.

C) Alternate Manual Coring Method

To perform form core retrieval at shallower depths, less then 10 feet in depth, BDC may core the concrete using our manual core drill made up of the following components.

1) The Coring Stand on the bottom right of the first page of submittal section 12g (labeled 116) consists of the M-2 Roller Carriage Upgrade and Anchor Stand parts 424110 and 427753
2) The Coring Machine Drill Motor, on the second page of 12g (labeled 130) is a WEKA DK32 powered by 230 volts whose part number is 4244058.
3) The third page of 15g (labeled 117) displays the two components working together as a core drilling unit.
4) The coring machine will be turning the 2" Core System, depicted in submittal Section 12h, to retrieve a core with an approximate diameter of a bit less the 2.00 inches at the locations and to the depths specified by the EIC.

In all instances cores will be labeled for depth, caisson number, core location, and core number, placed into a wooden core box, and given to *KCC* for delivery to the EIC.

1978 Bmbadier Mobile B34-S
Tracks: Rubber with metal cleats
Serial # 624416
Fuel: Diesel
Unit 208
Total height of machine boomed up 22 foot 10 inches/ boomed down 10 foot
Total width of track 7 foot 3 inches/ total width of machine 7 foot 9 inches
Over alll length of machine 18 foot

Unit - 209
1972 CME 550/ Atv Rig
Model: Gemco WF240P
Serial # 604
Tire Size: 23 ft./ front 26 ft. rear
Fule: Diesel
Toyal hieght of macnine boomed up 27 foot 5 inches/ boomed down 10 foot 7 inches
Total width of machine 8 foot 2 inches
Over all lenght of machine 22 foot/ length of machine from center of axeles 12 foot 4 inches

1984 Dietric D-50
Engine: Hercules 4 cyl
Vin # 322770040
Track/Make: Bombarier,
Rubber with metal cleat
Fuel: Gas
Unit-213
Total Hieght boomed up 27 feet 4 inches/ boomed down 9 foot 6 inches
Width of entire machine 7 foot 2 inches.
Over all length of machine boomed down and tabled in 23 feet

Total hieght boomed up 30 foot 6 inches/ boomed down 6 feet 6 inches
Width of entire machne 8 foot 2 inches
Over all lenght of machine boomed down 23 feet 8 inches/ wheel base center of axle to center of axle 12 feet 6 in.

CORE DRILLING TOOLS

Diamond drill bits and tools

An excellent assortment of diamond tools for the exploration and construction industries, including surface set and impregnated bits, reaming shells and casing shoes suitable for most drilling conditions.

Drill rods and casing

A production of wireline drill rod and casing.

Core barrels

Core barrel systems for vertical down to -45° angle holes, as well as pump-in systems for uphole drilling. Both supported by retrieval overshot devices.

Sizes / Systems

System	Hole		Core	
	mm	in	mm	in
A	48,0	1.89	27,0	1.06
B	59,9	2.36	36,4	1.43
N	75,7	2.98	47,6	1.88
H	96,1	3.78	63,5	2.50
P	122,6	4.83	85,0	3.35

• Wireline system which affected the rod and core barrel design and incorporated the use of a wireline overshot.
• Triple-tube system which effected the core barrel and the bit design and allowed for a second split inner tube to be used so that an undisturbed sample of very broken core could be viewed in its original state.
• Thin kerf or light weight systems which effected the design and dimensions of the entire drill string to allow for a larger core sample to be retrieved at increased depths or in similar sized hole.

M-2 HEAVY DUTY CORE RIGS

Features:

- Dual switch/outlet control panel with amp meter (except for CB700 models with LED amp meter)
- 4-spoke handle
- 2-7/8" precision made, chrome plated square column (mast)
- Vacuum pump for quick mounting to flat surface without drilling an anchor hole (Included with combination rig)
- 10" bit capacity (up to 36" with spacer block or pillow block and hydraulic motor)
- 6" wheels for easy mobility
- 4 Leveling Screws on base

The #1 Pro Rig in the U.S.A.

*Spacer blocks are found on page 142

M-2 Complete Combo Rig with CB748 motor

M-2 Complete Anchor Rig with Weka motor

Benefits:

- Heavy duty rig for larger jobs
- Larger mast to withstand high torque and large diameter bits
- The 4-spoke handle allows the operator to easily apply feed pressure
- Great for the professional driller
- Roller carriage available for more precise drilling, which in turn promotes longer life on diamonds
- Combo base is a quick change over from vacuum to anchor base

Parts List: #1801636
Operator Manual: #1801993

Improved Vacuum Seal Retention Keeps Vacuum Gasket Held Into the Base Longer for a Durable Seal

(42" mast)

(42" mast)

(42" mast)

(42" mast)

(42" mast)

Angle Combination Stand Only		
Part #	Cat #	List Price
4241056	01702	$ 1,603

Combination Stand Only		
Part #	Cat #	List Price
4241055	01700	$1,258

Large Base Anchor Stand Only		
Part #	Cat #	List Price
4241064	01708	$1,258

Angle Anchor Stand Only		
Part #	Cat #	List Price
4241110	01717	$1,448

Anchor Stand Only		
Part #	Cat #	List Price
4241100	01714	$ 1,108

Upgrade your slide carriage to a heavy duty roller carriage. Lasts longer and gives precision movement. Order with new rigs or for existing rigs.

M-2 Roller Carriage Upgrade (With New Rig)		
Part #	Cat #	List Price
4241000	01684	$ 234

M-2 Roller Carriage Upgrade (Existing Rigs)		
Part #	Cat #	List Price
4277531	01844	$ 901

DK22

- Heavy duty
- Water connection
- 1.250"-7 threaded spindle
- Recommended for bits up 1"-12" Max 16"

DK32

- Heavy duty
- Water connection
- 1.250"-7 threaded spindle
- Recommended for bits 2"-16" Max 18"

WEKA ELECTRIC DRILL MOTORS

Motor/Model #	AMP	No Load RPM	Loaded RPM	Part #	Cat #	Product Weight (lbs.)	List Price
WEKA DK22	23 (110V)	550/1120/1680	300/640/960	4244018	01741	31	$2,926
WEKA DK22	11 (230V)	550/1120/1680	300/640/960	4244016	47069	31	2,926
WEKA DK22L	23 (110V)	460/940/1400	250/520/780	4244105	54872	31	3,355
WEKA DK22S	23 (110V)	800/1640/2430	420/880/1300	4244014	47828	31	2,926
WEKA DK22S	11 (230V)	800/1640/2430	420/880/1300	4244029	47070	31	2,926
WEKA DK22F*	23 (110V)	550/1120/1680	300/640/960	4244118	40586	31	2,732
WEKA DK22F*	11 (230V)	550/1120/1680	300/640/960	4244119	53300	31	2,732
WEKA DK32	30 (110V)	380/800/1200	230/480/720	4244059	46896	31	3,152
WEKA DK32	15 (230V)	380/800/1200	230/480/720	4244058	47071	31	3,152
WEKA DK32F*	30 (110V)	380/800/1200	230/480/720	4244120	56143	31	2,953
WEKA DK32F*	15 (230V)	380/800/1200	230/480/720	4244121	44292	31	2,953

All Weka motors include on/off switch

*F series include special flange adapter for M-5 PRO only (11" maximum bit capacity)

COMPLETE M-2 COMBINATION DRILL RIGS WITH VACUUM PUMP						
Model #	Motor	Motor RPM	Part #	Cat #	Product Weight (lbs.)	List Price
M2C-20-CB-V	20 Amp Core Bore CB748	350/900	4241050	01696	135	$3,629
M2C-20-CB700-V	20 Amp Core Bore CB700	400/930	4241164	30117	135	2,990
M2C-20-MW4004-V	20 Amp Milwaukee	300/600	4241048	01694	139	3,385
M2C-20-MW4096-V	20 Amp Milwaukee	450/900	4241059	01704	139	3,385
M2C-20-MW4005-V	20 Amp Milwaukee	600/1200	4241049	01695	139	3,385
M2C-15-MW4097-V	15 Amp Milwaukee	500/1000	4241051	59573	139	3,313
M2C-23-DK22-V	23 Amp Weka DK22	550/1120/1680	4241068	47426	137	4,601
M2C-23-DK22S-V	23 Amp Weka DK22S	800/1640/2430	4241069	50007	137	4,601
COMPLETE M-2 COMBINATION DRILL RIGS WITHOUT VACUUM PUMP						
M2C-20-CB	20 Amp Core Bore CB748	350/900	4241082	71149	122	$3,268
M2C-20-CB700	20 Amp Core Bore CB700	400/930	4241166	30152	122	2,327
M2C-20-MW4004	20 Amp Milwaukee	300/600	4241083	76314	124	3,035
M2C-20-MW4096	20 Amp Milwaukee	450/900	4241084	75479	124	3,035
M2C-20-MW4005	20 Amp Milwaukee	600/1200	4241085	69558	124	3,035
M2C-15-MW4097	15 Amp Milwaukee	500/1000	4241086	76984	124	2,962
M2C-23-DK22	23 Amp Weka DK22	550/1120/1680	4241088	73291	120	4,254
M2C-23-DK22S	23 Amp Weka DK22S	800/1640/2430	4241089	75275	120	4,254
COMPLETE M-2 ANCHOR DRILL RIGS						
M2A-20-CB	20 Amp Core Bore CB748	350/900	4241001	01686	110	$3,113
M2A-20-CB700	20 Amp Core Bore CB700	400/930	4241163	30098	110	2,201
M2A-20-MW4004	20 Amp Milwaukee	300/600	4241009	01692	114	2,884
M2A-20-MW4096	20 Amp Milwaukee	450/900	4241003	01687	114	2,884
M2A-20-MW4005	20 Amp Milwaukee	600/1200	4241010	01693	114	2,884
M2A-15-MW4097	15 Amp Milwaukee	500/1000	4241006	01689	114	2,812
M2A-23-DK22	23 Amp Weka DK22	550/1120/1680	4241008	01691	114	4,103
M2A-23-DK22S	23 Amp Weka DK22S	800/1640/2430	4241011	52247	114	4,103

CB700 Rigs do not include a control panel. - CB700 has a built-in amp meter.

Over a Thousand Different Ways to Build Your Custom Rig!

Drill Stand Only includes: base, column (mast), carriage, ceiling jack, motor mount plate and wheels

Complete Combination Rig includes: combo anchor/vacuum base, drill motor, column (mast), motor mount, carriage, control panel, vacuum pump

Complete Anchor Rig includes: small anchor base, drill motor, column (mast), carriage, control panel, ceiling jack and wheel kit

Custom Combination Rig Components: Combo drill stand, Drill motor (pages 129-131), optional control panel (page 140) and optional vacuum pump (page 140)

Custom Anchor Rig Components: Anchor drill stand, drill motor (pages 129-131) and optional control panel (page 140)

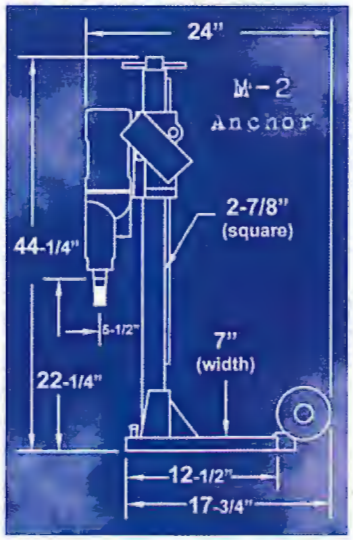

Location to drill anchor hole = 12" Measured from the center of the motor spindle to the center of the anchor slot on base

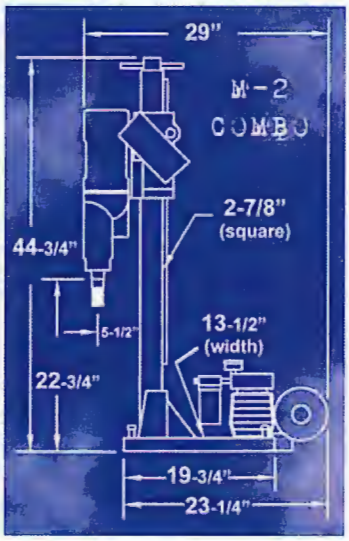

Location to drill anchor hole = 12" Measured from the center of the motor spindle to the center of the anchor/vacuum slot on base

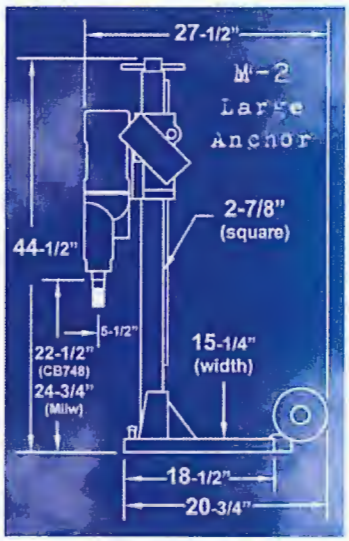

Location to drill anchor hole = 12-1/2" Measured from the center of the motor spindle to the center of the anchor slot on base

Don't forget to ask about our 3 Year Gold Extended Warranty on new electric core rigs!

Don't forget to ask about our 5 Year Platinum Extended Warranty on new electric core rigs!

HOFFMAN DIAMOND PRODUCTS, INC.

121 CEDAR STREET • PUNXSUTAWNEY, PENNSYLVANIA 15767 • (814) 938-7600 • 800-444-4180 • FAX: 814-938-7625
E-mail: sales@hoffmandiamond.com • www.hoffmandiamond.com

CORE CATCHER SYSTEM

Use the right tool for the job.

Have you ever had trouble recovering a deep core? Ever had a core fall from a bridge deck or a second story? These things are not only a nuisance but they can be dangerous. Now a simple tool can eliminate these problems. It's the Hoffman Core Catcher. The Hoffman Core Catcher consists of a treaded bit tip, core barrel, threaded adapter, and a core catcher. When you raise the core barrel, the core inside comes along. If the job demands core recovery or safety from falling core, purchase the Core Catcher System from Hoffman Diamond Products.

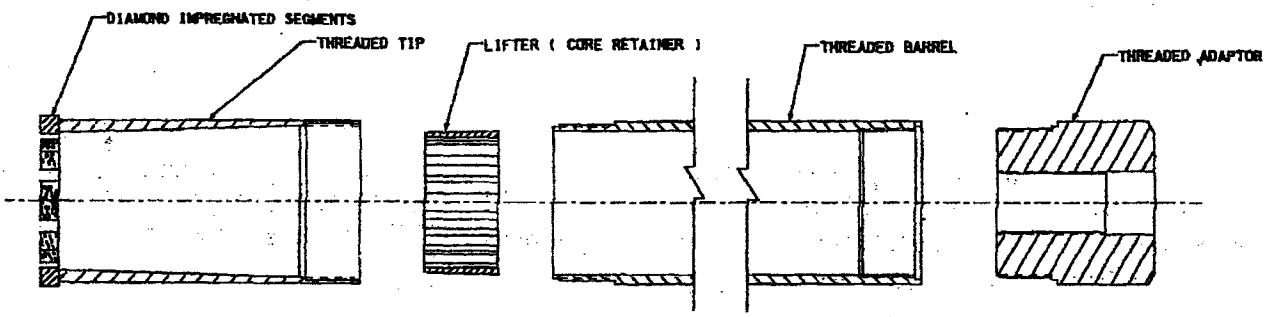

CORE BARREL EXPLODED

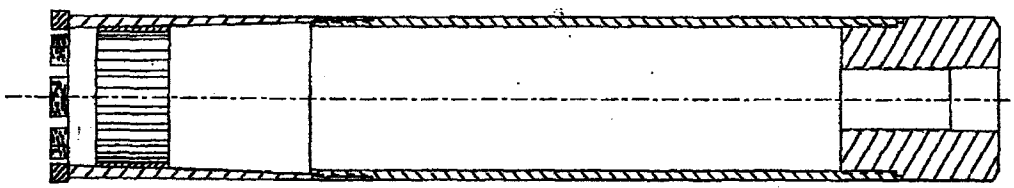

CORE BARREL ASSEMBLY

Size (OD X ID)	Pro 800 Bit	Pro 1000 Bit	1 ft. long Barrel	2 ft. long Barrel	3 ft. long Barrel	4 ft. long Barrel	Core Catcher	1-1/4-7 Adaptor
2" (2.437 X 2.000)	240	318	142	187	231	278	63	92
3" (3.437 X 2.875)	319	448	171	230	291	353	71	119
4" (4.437 X 3.992)	415	567	196	271	347	423	72	174

Size	Bit OD	Bit ID	Impregnated Bit	Blank Shell	1 ft. Barrel	2 ft. Barrel	5 ft. Barrel	Core Catcher	NW Conn. Adaptor or 1-1/4-7
6"	6.062	5.312	1000	240	360	400	535	247	415
8"	8.2	7.375	1167	309		533		367	500

Cold Weather Concrete is any concrete placement when ambient air temperature is 40 degrees Fahrenheit or below, according to Spec Section 501.07(b). When placing concrete under Cold Weather Concrete conditions, one must take care to maintain temperatures when placing and curing the concrete.

Kubricky Construction and Buffalo Drilling intend to place 168cy of SCC once the shaft is drilled, the hole is verified and the reinforcement is installed. It is anticipated that the ambient air temperature will be below 32 degrees Fahrenheit when concrete is placed.

J.P. Carrara & Sons does not have the ability to heat aggregate at their Rutland Facility. As a result, the team will not be able to pour concrete when the ambient air temperature is below 20 degrees Fahrenheit. Prior to scheduling the concrete pour, the team will agree that the forecasted weather will be adequate.

As the pour is concluded, a temporary cover will be installed over the 12’ diameter casing. The top surface of concrete will be kept wet using one of a couple methods. If possible, the temporary casing will be flooded with clean water. If not, soaker hoses and wet burlap will be placed on top of the fresh concrete. One forced hot air heater, such as the Heat Wagon VF400, will be used to maintain a minimum temperature of 50 degrees Fahrenheit inside the temporary enclosure. A second heater will be onsite in case the first heater is insufficient or fails. A continuous recording thermometer will be used to monitor the air temperature inside of the enclosure. The thermometer will be equivalent to a Dickson SL4350 with a C205 recording disk. The thermometer will be placed in a location, agreed upon with the engineer, in an effort to accurately represent the entire curing area. The heated enclosure will be maintained for the full curing period of seven days. Then the temperature will be gradually brought down to the ambient air temperature. The specification requires a change of no more than 1 degree per hour.

Rutland City BRF3000 (16) Lighting Plan for 900.640 – Drilled Shaft in Earth

During the construction of the drilled shaft work hours will extend past daylight. Work is anticipated to commence by 7am and finish around 5pm daily. Work will be focused in the immediate area surrounding the shaft. Support activities will also extend east towards the construction entrance.

The work area will be roughly 250’ x 70’ = 17,500 square feet. The National Cooperative Highway Research Program (NCHRP) Report 498 recommends an illumination area of 65’ for fast moving equipment. That is listed in Table 3 of NCHRP Report 498 (Section 3).

Four light towers will be placed as shown on the attached sketch. The light towers will be Wanco WLTC-4 or equivalent models. Each light tower has four 1,000 watt metal halide lamps.

The NCHRP Report 498(Section 3) recommends that an illumination level of 54 lux be maintained for excavation work and 108 lux for bridge deck work. Referring to figure 5 of NCHRP Report 498(Section 3); to achieve 108 lux with metal halide bulbs the illumination should be .5 watts per square foot.

The total illumination would then be .5 watts/sf x 17,500 sf = 8,750 watts. Four WLTC-4 light towers will produce 16,000 watts and therefore be well above the recommended level of 8,750 watts.

The light towers will be installed with two on the north side of the work area and two placed on the south side. The installation will be per the attached Figure 6 from the NCHRP Report 498. The locations and angles will be field adjusted to ensure effective coverage of the work area and the changing conditions of the site.

A: WLTC-4

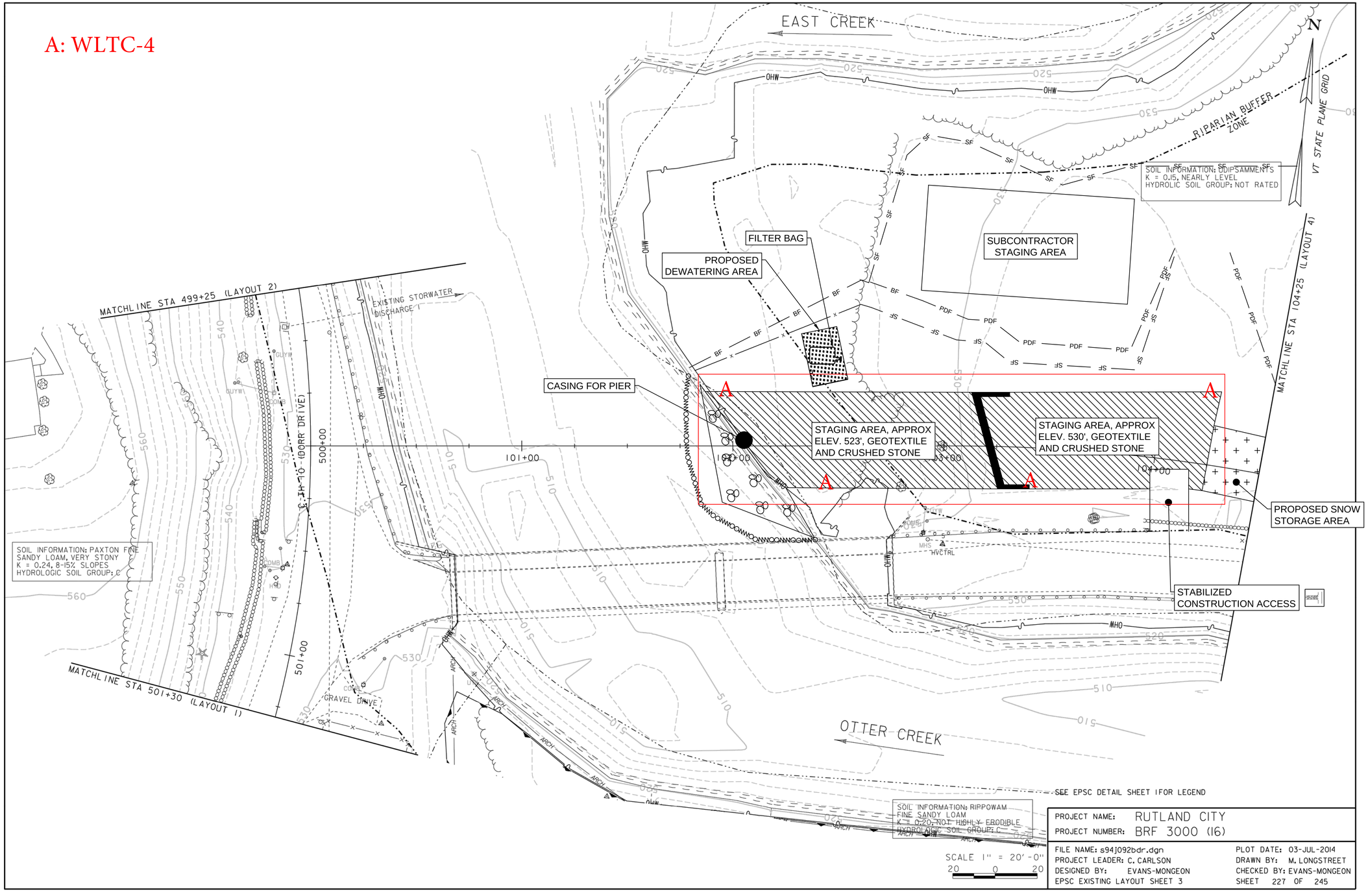

PROJECT NAME:	RUTLAND CITY
PROJECT NUMBER:	BRF 3000 (16)

FILE NAME: s94j092bdr.dgn	PLOT DATE: 03-JUL-2014
PROJECT LEADER: C. CARLSON	DRAWN BY: M. LONGSTREET
DESIGNED BY: EVANS-MONGEON	CHECKED BY: EVANS-MONGEON
EPSC EXISTING LAYOUT SHEET 3	SHEET 227 OF 245

NOTES:

1. BASE PLAN IS FROM RUTLAND CITY BRF 3000 (16) PLANS BY VAOT DATED 7/3/2014.
2. STAGE 1 WORK INCLUDES THE CONSTRUCTION OF ABUTMENT 1 AND THE PIER.

REVISIONS

DATE	COMMENTS	BY

THIS DRAWING SHALL NOT BE REUSED OR ALTERED IN ANY WAY WITHOUT THE WRITTEN APPROVAL AND AUTHORITY OF STRUCTURE GROUP AND RESOURCES. SHALL BE MADE BY AUTHORIZED GROUP

RUTLAND CITY
BRF 3000 (16)

CITY OF RUTLAND, VERMONT

Project #	---
Project Mgr.	TPK
Design by	TPK
Drawn by	TPK
Reviewed by	NRJ
Approved by	TPK
Date	
Scale	AS SHOWN

SHEET OF

FILE: W:\CADD Files\Rutland VT\Kulicky Bridge\River Street Bridge\BRF3000(16) - EC1.dwg Nov 25, 2014 - 2:16pm

Fixed Work Areas	
Drainage Excavation, Pipe Installation, Structures, Signalization, Maintenance Activities, Staging and Startup of Paving Operations	
Illumination Requirements	Minimum Area Illumination Level = 54 lx Category II Work – Minimum Illumination Level = 108 lx Category III Work - Minimum Illumination Level = 216 lx
Recommended Lighting Equipment	Portable Light Plants with extending towers, four luminaires (typically 1000w metal halide)
Configuration Guidelines	1) Extend Tower to Maximum Practical Height 2) Use Glare Control Shades on the Luminaires 3) Maintain Glare Control Aiming When possible aim lights away from oncoming traffic Angle between the vertical and the aiming direction of the lamps should not exceed 60 degrees 4) Space Light Plants to Provide Required Illumination Levels
Typical Configuration Sketch	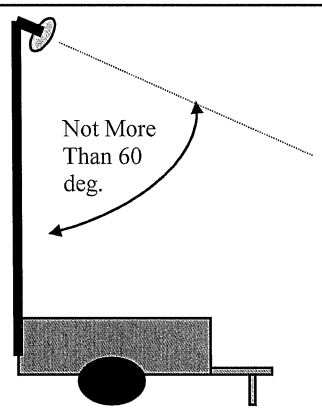

Figure 6. Field guidelines for fixed area lighting.

~~45' TO 155'~~ 140' ANGLE BOOM

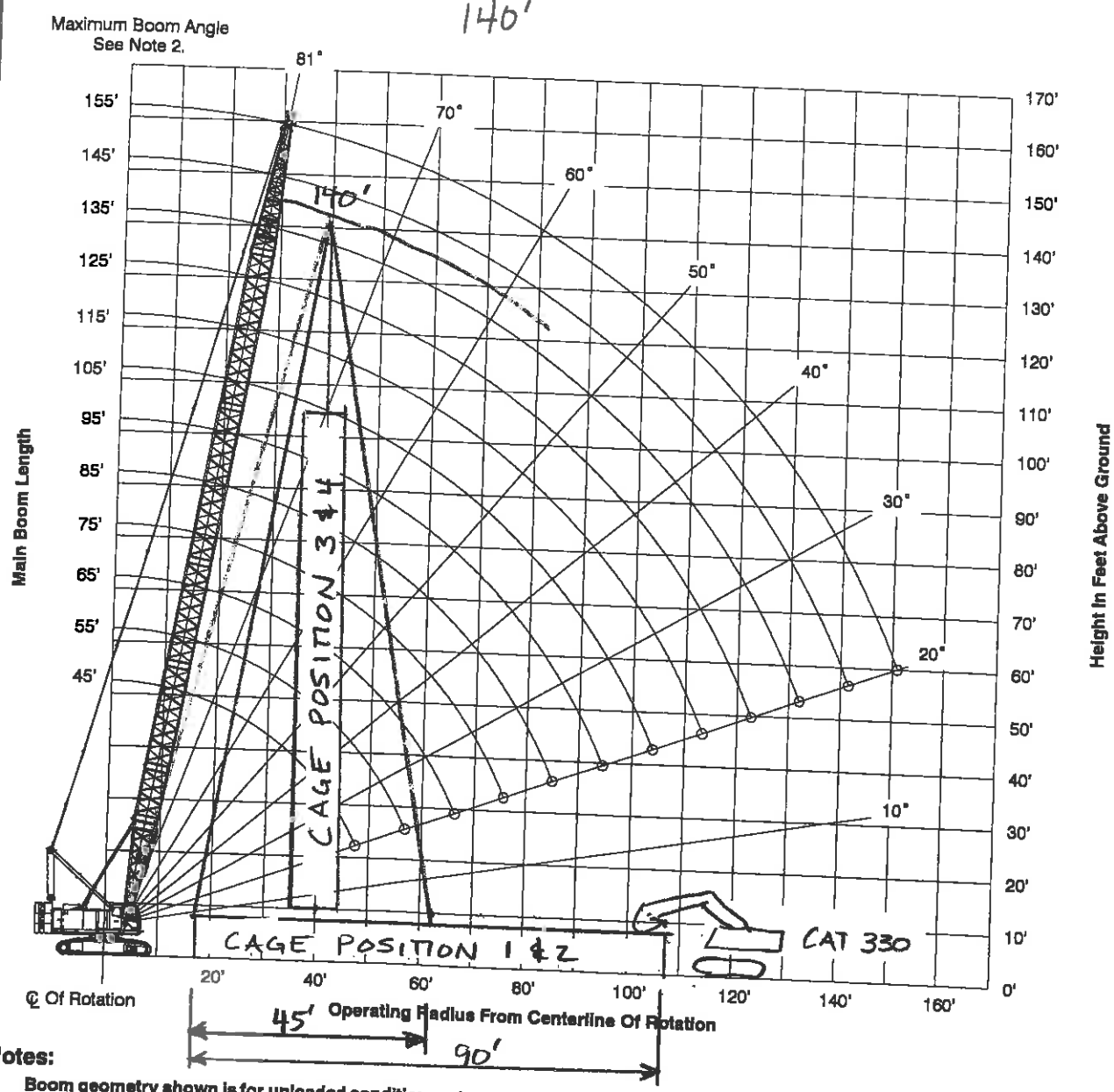

Notes:

1. Boom geometry shown is for unloaded condition and crane standing level on firm supporting surface. Boom deflection, subsequent radius, and boom angle change must be accounted for when applying load to hook.
2. Maximum and minimum boom angles are equal to the values listed in the capacity chart for each boom length.

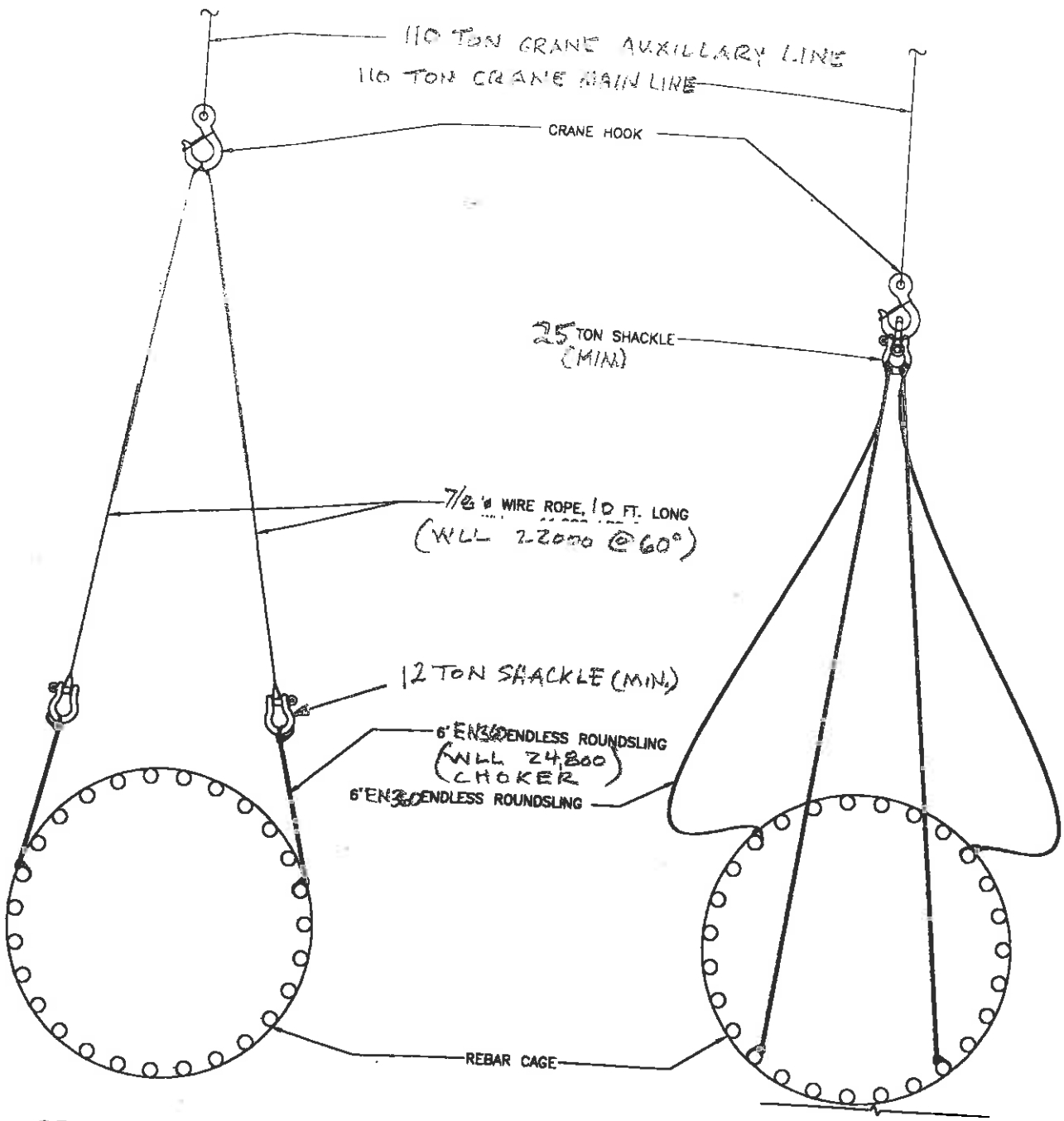

SECTION AT MID POINT

SECTION 4' FROM TOP

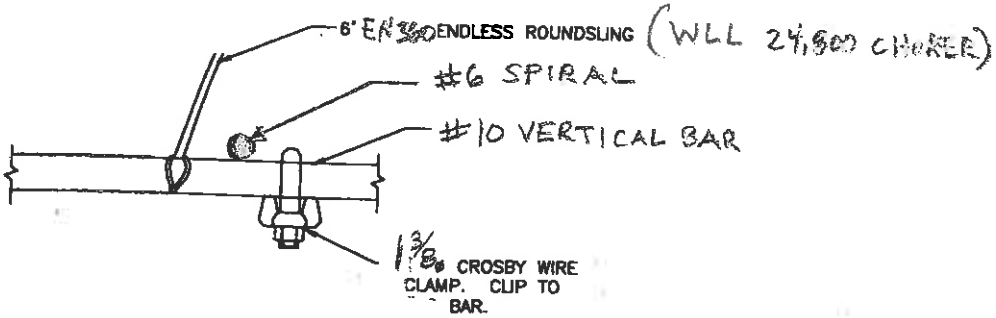

DETAIL A

5489 (supersedes 5467)–1006–N6

Technical Data

Specifications & Capacities

218 HYLAB

HSL Crawler Crane

110 Ton *(99.8 metric ton)*

1164

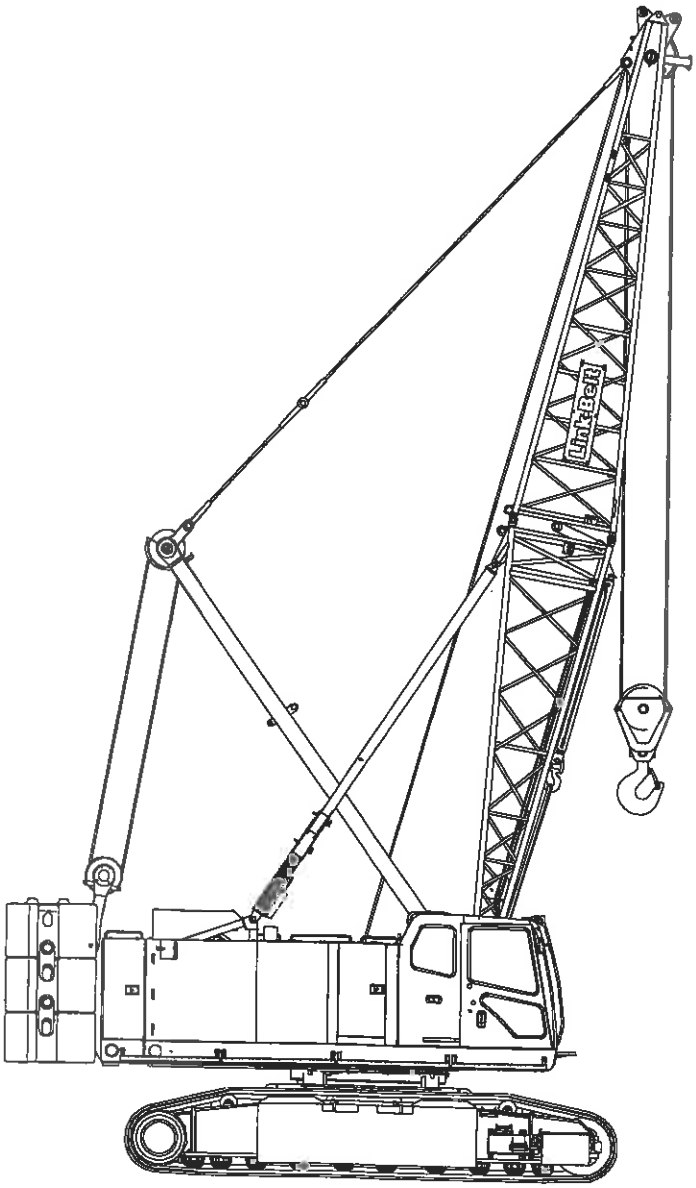

CAUTION: This material is supplied for reference use only. Operator must refer to in–cab Crane Rating Manual and Operator's Manual to determine allowable crane lifting capacities and assembly and operating procedures.

Tube Boom Lift Capacity Chart – 360° Rotation
ABC+A [62,820+22,200 lb (28 495+10 070kg)] Counterweight – Side Frames Extended
[All capacities are listed in kips (mt)]

Load Radius ft (m)	Boom Length – ft (m)									
	140 (42.7)	150 (45.7)	160 (48.8)	170 (51.8)	180 (54.9)	190 (57.9)	200 (61.0)	210 (64.0)	220 (67.1)	230 (70.1)
25 (7.6)										
30 (9.1)	89.0 (31.3)									
35 (10.7)	55.8 (25.3)	55.6 (25.2)	55.5 (25.2)	55.3 (25.1)						
40 (12.2)	46.6 (21.1)	46.5 (21.1)	46.3 (21.0)	46.1 (20.9)	45.9 (20.8)	45.8 (20.8)	43.1 (19.6)			
50 (15.2)	34.7 (15.7)	34.5 (15.6)	34.4 (15.6)	34.2 (15.5)	34.0 (15.4)	33.8 (15.3)	33.6 (15.2)	33.4 (15.2)	31.3 (14.2)	26.6 (12.1)
60 (18.3)	27.3 (12.4)	27.1 (12.3)	27.0 (12.2)	26.8 (12.2)	26.6 (12.1)	26.4 (12.0)	26.2 (11.9)	26.0 (11.8)	24.4 (11.1)	23.5 (10.7)
70 (21.3)	22.3 (10.1)	22.1 (10.0)	21.9 (9.9)	21.7 (9.8)	21.5 (9.8)	21.3 (9.7)	21.1 (9.6)	20.9 (9.5)	20.7 (9.4)	20.5 (9.3)
80 (24.4)	18.6 (8.4)	18.4 (8.3)	18.2 (8.3)	18.0 (8.2)	17.8 (8.1)	17.6 (8.0)	17.4 (7.9)	17.2 (7.8)	17.0 (7.7)	16.8 (7.6)
90 (27.4)	15.8 (7.2)	15.7 (7.1)	15.5 (7.0)	15.3 (6.9)	15.1 (6.8)	14.9 (6.8)	14.7 (6.7)	14.4 (6.5)	14.2 (6.4)	14.0 (6.4)
100 (30.5)	13.7 (6.2)	13.5 (6.1)	13.3 (6.0)	13.1 (5.9)	12.9 (5.9)	12.7 (5.8)	12.5 (5.7)	12.2 (5.5)	12.0 (5.4)	11.8 (5.4)
110 (33.5)	11.9 (5.4)	11.7 (5.3)	11.5 (5.2)	11.3 (5.1)	11.1 (5.0)	10.9 (4.9)	10.7 (4.9)	10.5 (4.8)	10.3 (4.7)	10.0 (4.5)
120 (36.6)	10.4 (4.7)	10.3 (4.7)	10.1 (4.6)	9.9 (4.5)	9.7 (4.4)	9.5 (4.3)	9.2 (4.2)	9.0 (4.1)	8.8 (4.0)	8.6 (3.9)
130 (39.6)	9.2 (4.2)	9.0 (4.1)	8.8 (4.0)	8.6 (3.9)	8.4 (3.8)	8.2 (3.7)	8.0 (3.6)	7.8 (3.5)	7.6 (3.4)	7.4 (3.4)
140 (42.7)	8.2 (3.7)	8.0 (3.6)	7.8 (3.5)	7.6 (3.4)	7.4 (3.4)	7.2 (3.3)	7.0 (3.2)	6.8 (3.1)	6.5 (2.9)	6.3 (2.9)
150 (45.7)		7.1 (3.2)	6.9 (3.1)	6.7 (3.0)	6.5 (2.9)	6.3 (2.9)	6.1 (2.8)	5.9 (2.7)	5.7 (2.6)	5.4 (2.4)
160 (48.8)			6.1 (2.8)	5.9 (2.7)	5.7 (2.6)	5.5 (2.5)	5.3 (2.4)	5.1 (2.3)	4.9 (2.2)	4.7 (2.1)
170 (51.8)				5.2 (2.4)	5.0 (2.3)	4.8 (2.2)	4.6 (2.1)	4.4 (2.0)	4.2 (1.9)	4.0 (1.8)
180 (54.9)					4.2 (1.9)	4.2 (1.9)	4.0 (1.8)	3.8 (1.7)	3.6 (1.6)	3.4 (1.5)
190 (57.9)						3.4 (1.5)	3.5 (1.6)	3.2 (1.5)	3.0 (1.4)	2.8 (1.3)
200 (61.0)							2.6 (1.2)	2.6 (1.2)	2.6 (1.2)	2.4 (1.1)
210 (64.0)										
220 (67.1)										
230 (70.1)										

This material is supplied for reference use only. Operator must refer to in–cab Crane Rating Manual and Operator's Manual to determine allowable crane lifting capacities and assembly and operating procedures.

CAT 330

Reach Boom Lift Capacities

Load Point Height | Load Radius Over Front | Load Radius Over Side | Load at Maximum Reach

R3.9D STICK – 3900 mm (12'10") **SHOES** – 850 mm (34") triple grouser **BOOM** – 6500 mm (21'4")
BUCKET – D 36" HD

		1.5 m (5.0 ft)		3.0 m (10.0 ft)		4.5 m (15.0 ft)		6.0 m (20.0 ft)		7.5 m (25.0 ft)		9.0 m (30.0 ft)				
																m ft
9.0 m 30.0 ft	kg lb													*3100 *6900	*3100 *6900	9.21 29.79
7.5 m 25.0 ft	kg lb													*2950 *6450	*2950 *6450	10.27 33.47
6.0 m 20.0 ft	kg lb									*6050 *13,250	*6050 *13,250	*5900 *12,900	4750 10,150	*2900 *6300	*2900 *6300	10.97 35.88
4.5 m 15.0 ft	kg lb									*6800 *14,700	6450 13,850	*6300 *13,700	4600 9800	*2900 *6400	*2900 *6400	11.38 37.30
3.0 m 10.0 ft	kg lb					*12 350 *26,550	*12 350 *26,550	*9300 *20,000	8850 19,050	*7700 *16,650	6150 13,150	*6800 *14,750	4450 9450	*3050 *6650	2800 6200	11.54 37.87
1.5 m 5.0 ft	kg lb					*15 300 *32,950	12 750 27,450	*10 850 *23,450	8250 17,700	*8600 *18,650	5800 12,450	7200 15,400	4250 9100	*3250 *7100	2800 6100	11.47 37.63
Ground Line	kg lb			*6850 *15,600	*6850 *15,600	*17 000 *36,700	12 000 25,800	*12 050 *26,000	7800 16,700	*9350 20,200	5500 11,850	7000 15,050	4100 8750	*3550 *7850	2900 6350	11.15 36.59
–1.5 m –5.0 ft	kg lb	*6700 *14,900	*6700 *14,900	*10 550 *23,900	*10 550 *23,900	*17 450 *37,700	11 700 25,100	*12 550 *27,200	7500 16,150	9200 19,800	5350 11,500	6900 14,850	4000 8600	*4100 *9000	3150 6950	10.57 34.64
–3.0 m –10.0 ft	kg lb	*10 900 *24,400	*10 900 *24,400	*15 450 *35,000	*15 450 *35,000	*16 850 *36,450	11 650 25,050	*12 400 *26,800	7450 16,000	9150 19,650	5300 11,400	6950 15,250	4000 8850	*4900 *10,900	3700 8200	9.67 31.62
–4.5 m –15.0 ft	kg lb	*15 900 *35,800	*15 900 *35,800	*21 650 *46,700	*21 650 *46,700	*15 200 *32,750	11 900 25,550	*11 300 *24,300	7550 16,250	*8450 *17,900	5400 11,650			*6100 *13,400	4800 10,800	8.34 27.10
–6.0 m –20.0 ft	kg lb			*16 600 *35,150	*16 600 *35,150	*11 950 *25,250	*11 950 *25,250	*8550 *17,600	7900 17,100					*7350 *16,100	7050 16,050	6.50 20.92

* Limited by hydraulic capacity rather than tipping load. The above loads are in compliance with SAE hydraulic excavator lift capacity rating standard J1097. They do not exceed 87% of hydraulic lifting capacity or 75% of tipping capacity. Weight of all lifting accessories must be deducted from the above lifting capacities.

R3.2D STICK – 3200 mm (10'6") **SHOES** – 850 mm (34") triple grouser **BOOM** – 6500 mm (21'4")
BUCKET – D 36" HD

		1.5 m (5.0 ft)		3.0 m (10.0 ft)		4.5 m (15.0 ft)		6.0 m (20.0 ft)		7.5 m (25.0 ft)		9.0 m (30.0 ft)				
																m ft
9.0 m	kg													*4000	*4000	8.26
7.5 m 25.0 ft	kg lb									*6400 *14,000	*6400 *14,000			*3750 *8250	*3750 *8250	9.46 30.77
6.0 m 20.0 ft	kg lb									*6850 *14,950	6550 14,000			*3700 *8150	*3700 *8150	10.22 33.41
4.5 m 15.0 ft	kg lb							*8600 *18,650	*8600 *18,650	*7500 *16,300	6350 13,550	*6900 *15,050	4500 9650	*3750 *8250	3400 7500	10.67 34.95
3.0 m 10.0 ft	kg lb					*13 950 *29,950	13 450 29,000	*10 200 *21,950	8650 18,550	*8350 *18,050	6050 12,950	*7300 15,700	4400 9350	*3950 *8650	3200 7050	10.84 35.55
1.5 m 5.0 ft	kg lb					*16 450 *35,450	12 350 26,650	*11 600 *25,050	8100 17,400	*9150 *19,750	5750 12,300	7150 15,350	4250 9050	*4250 *9300	3150 6950	10.75 35.29
Ground Line	kg lb			*14,100	*14,100	*17 450 *37,750	11 850 25,500	*12 450 *26,950	7700 16,600	9400 20,150	5500 11,850	7050 15,100	4150 8850	*4700 *10,300	3300 7250	10.41 34.15
–1.5 m –5.0 ft	kg lb	*8050 *17,900	*8050 *17,900	*11 800 *26,650	*11 800 *26,650	*17 300 *37,500	11 700 25,150	*12 700 *27,450	7550 16,200	9250 19,900	5400 11,600	7000 15,400	4100 9000	*5400 *11,950	3650 8050	9.78 32.03
–3.0 m –10.0 ft	kg lb	*13 500 *30,200	*13 500 *30,200	*18 400 *41,650	*18 400 *41,650	*16 250 *35,100	11 850 25,400	*12 150 *26,150	7550 16,250	9300 *19,900	5400 11,650			*6650 *14,750	4400 9800	8.78 28.67
–4.5 m –15.0 ft	kg lb			*19 100 *41,100	*19 100 *41,100	*13 950 *30,000	12 150 26,100	*10 450 *22,250	7750 16,700					*4600 *9750	*4600 *9750	7.25 23.47

* Limited by hydraulic capacity rather than tipping load. The above loads are in compliance with SAE hydraulic excavator lift capacity rating standard J1097. They do not exceed 87% of hydraulic lifting capacity or 75% of tipping capacity. Weight of all lifting accessories must be deducted from the above lifting capacities.

Forged Wire Rope Clips

SEE APPLICATION AND WARNING INFORMATION

Para Español: www.thecrosbygroup.com

On Page 56

G-450

- Each base has a Product Identification Code (PIC) for material traceability, the name CROSBY or CG, and a size forged into it.
- Based on the catalog breaking strength of wire rope, Crosby wire rope clips have an efficiency rating of 80% for 1/8" - 7/8" sizes, and 90% for sizes 1" through 3-1/2".
- Entire Clip-Galvanized to resist corrosive and rusting action.
- Sizes 1/8" through 2-1/2" and 3" have forged bases.
- All Clips are individually bagged or tagged with proper application instructions and warning information.
- Clip sizes up through 1-1/2" have rolled threads.
- Meets or exceeds all requirements of ASME B30.26 including identification, ductility, design factor, proof load and temperature requirements. Importantly, these wire rope clips meet other critical performance requirements including fatigue life, impact properties and material traceability, not addressed by ASME B30.26.
- Look for the Red-U-Bolt®, your assurance of Genuine Crosby Clips.

Crosby Clips, all sizes 1/4" and larger, meet the performance requirements of Federal Specification FF-C-450 TYPE 1 CLASS 1, except for those provisions required of the contractor. For additional information, see page 444.

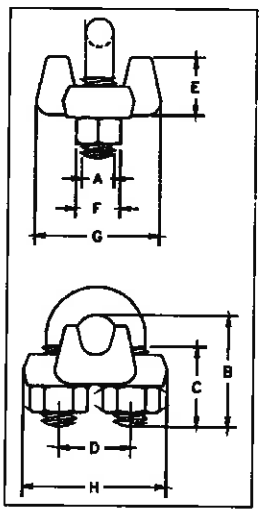

G-450 Crosby® Clips

Rope Size (in.)	Rope Size (mm)	G-450 Stock No.	Std. Package Qty.	Weight Per 100 (lbs.)	Dimensions (in.) A	B	C	D	E	F	G	H
1/8	3-4*	1010015	100	6	.22	.72	.44	.47	.37	.38	.81	.99
3/16*	5*	1010033	100	10	.25	.97	.56	.59	.50	.44	.94	1.18
1/4	6-7	1010051	100	19	.31	1.03	.50	.75	.66	.56	1.19	1.43
5/16	8	1010079	100	28	.38	1.38	.75	.88	.73	.69	1.31	1.66
3/8	9-10	1010097	100	48	.44	1.50	.75	1.00	.91	.75	1.63	1.94
7/16	11	1010113	50	78	.50	1.88	1.00	1.19	1.13	.88	1.91	2.28
1/2	12-13	1010131	50	80	.50	1.88	1.00	1.19	1.13	.88	1.91	2.28
9/16	14-15	1010159	50	109	.56	2.25	1.25	1.31	1.34	.94	2.06	2.50
5/8	16	1010177	50	110	.56	2.25	1.25	1.31	1.34	.94	2.06	2.50
3/4	18-20	1010195	25	142	.62	2.75	1.44	1.50	1.39	1.06	2.25	2.84
7/8	22	1010211	25	212	.75	3.12	1.62	1.75	1.58	1.25	2.44	3.16
1	24-26	1010239	10	252	.75	3.50	1.81	1.88	1.77	1.25	2.63	3.47
1-1/8	28-30	1010257	10	283	.75	3.88	2.00	2.00	1.91	1.25	2.81	3.59
1-1/4	32-34	1010275	10	438	.88	4.44	2.22	2.34	2.17	1.44	3.13	4.13
1-3/8	36	1010293	10	442	.88	4.44	2.22	2.34	2.31	1.44	3.13	4.19
1-1/2	38	1010319	10	544	.88	4.94	2.38	2.59	2.44	1.44	3.41	4.44
1-5/8	41-42	1010337	Bulk	704	1.00	5.31	2.62	2.75	2.66	1.63	3.63	4.75
1-3/4	44-46	1010355	Bulk	934	1.13	5.75	2.75	3.06	2.92	1.81	3.81	5.24
2	48-52	1010373	Bulk	1300	1.25	6.44	3.00	3.38	3.03	2.00	4.44	5.88
2-1/4	56-58	1010391	Bulk	1600	1.25	7.13	3.19	3.88	3.19	2.00	4.56	6.38
2-1/2	62-65	1010417	Bulk	1900	1.25	7.69	3.44	4.13	3.69	2.00	4.69	6.63
** 2-3/4	** 68-72	1010435	Bulk	2300	1.25	8.31	3.56	4.38	4.88	2.00	5.00	6.88
3	75-78	1010453	Bulk	3100	1.50	9.19	3.88	4.75	4.44	2.38	5.31	7.61
** 3-1/2	** 85-90	1010426	Bulk	4000	1.50	10.75	4.50	5.50	6.00	2.38	6.19	8.38

* Electro-plated U-Bolt and Nuts. ** 2-3/4" and 3-1/2" base is made of cast steel.

SS-450

- Each base has a Product Identification Code (PIC) for material traceability, the name CROSBY or "CG", and a size forged into it.
- Entire clip is made from 316 Stainless Steel to resist corrosive and rusting action.
- All components are Electro-Polished.
- All Clips are individually bagged or tagged with proper application instructions and warning information.

SS-450 Stainless Steel Wire Rope Clips

Rope Size (in.)	Rope Size (mm)	SS-450 Stock No.	Std. Package Qty.	Weight Per 100 (lbs.)	Dimensions (in.) A	B	C	D	E	F	G	H
1/8	3-4	1011250	Bulk	6	.22	.72	.44	.47	.41	.38	.81	.94
3/16	5	1011261	Bulk	10	.25	.97	.56	.59	.50	.44	.94	1.16
1/4	6-7	1011272	Bulk	20	.31	1.03	.50	.75	.66	.56	1.19	1.44
3/8	9-10	1011283	Bulk	47	.44	1.50	.75	1.00	.91	.75	1.63	1.94
1/2	12-13	1011305	Bulk	77	.50	1.88	1.00	1.19	1.13	.88	1.91	2.28
5/8	16	1011327	Bulk	106	.56	2.38	1.25	1.31	1.34	.94	2.06	2.50

Copyright © 2013 The Crosby Group LLC
All Rights Reserved

TUFLEX ENDLESS ROUNDSLINGS

Tuflex Endless (EN)
The Most Versatile *Tuflex* Roundsling

Features, Advantages and Benefits

Maintains all the basic *Tuflex* features plus...

Promotes Safety

- Load stability and balance can be achieved by spreading sling legs.

Saves Money

- Wear points can be shifted to extend sling life
- The most flexible style of sling

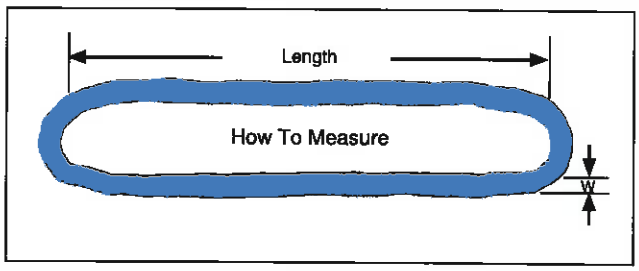

Part No.	Color	Rated Capacity (lbs.)* Vertical	Choker	Basket @ 90°	Basket @ 45°	Minimum Length (ft.)	Approximate Measurements Weight (lbs. / ft.)	Body Dia. Relaxed (in.)	(W) Width at Load (in.)	Minimum Hardware Dia. ** (in.)
EN30	Purple	2,600	2,100	5,200	3,600	1 1/2	.2	5/8	1	7/16
EN60	Green	5,300	4,200	10,600	7,400	1 1/2	.3	7/8	1 3/8	5/8
EN90	Yellow	8,400	6,700	16,800	11,800	3	.5	1 1/8	1 3/4	3/4
EN120	Tan	10,600	8,500	21,200	14,000	3	.6	1 1/8	1 7/8	7/8
EN150	Red	13,200	10,600	26,400	18,000	3	.8	1 3/8	2	1
EN180	White	16,800	13,400	33,600	23,000	3	.9	1 3/8	2 1/8	1 1/8
EN240	Blue	21,200	17,000	42,400	29,000	3	1.3	1 3/4	2 5/8	1 3/16
EN360	Grey	31,000	24,800	62,000	43,000	3	1.7	2 1/4	3 1/4	1 1/2
EN600	Brown	53,000	42,400	106,000	74,000	8	2.8	2 3/4	4	2
EN800	Olive	66,000	52,800	132,000	93,000	8	3.4	3 1/8	4 5/8	2 1/8
EN1000	Black	90,000	72,000	180,000	127,000	8	4.3	3 5/8	5 1/4	2 1/2

* ⚠ WARNING Do not exceed rated capacities. Sling capacity decreases as the angle from horizontal decreases. Slings should not be used at angles of less than 30°.
Refer to Effect of Angle chart page 12.
** This is the smallest recommended connection hardware diameter to be used for a vertical hitch.

Tuflex

SET REINFORCING CAGE IN DRILLED SHAFT SEQUENCE

1. SET CRANE IN AND CAT 330 EXCAVATOR IN POSITION 1
2. BACK REINFORCING CAGE INTO POSITION 1
3. RIG CAGE AT THREE POINTS USING CRANE MAIN LINE, AUXILLARY LINE AND 330 HOE
4. PICK CAGE OFF OF TRUCK AND REMOVE TRUCK
5. SET CAGE ON BLOCKING AND MOVE 330 HOE TO POSITION 2 (CRANE REMAINS IN POSTION 2)
6. PICK AND UPRIGHT CAGE USING CRANE MAIN LINE AUXILLARY LINE WHILE WALKING 330 HOE TOWARD CRANE.
7. LIFT CAGE INTO POSITION 3 AND DISCONNECT 330 HOE.
8. ROTATE CRANE INTO POSITION 4 AND LOWER CAGE INTO DRILLED SHAFT.

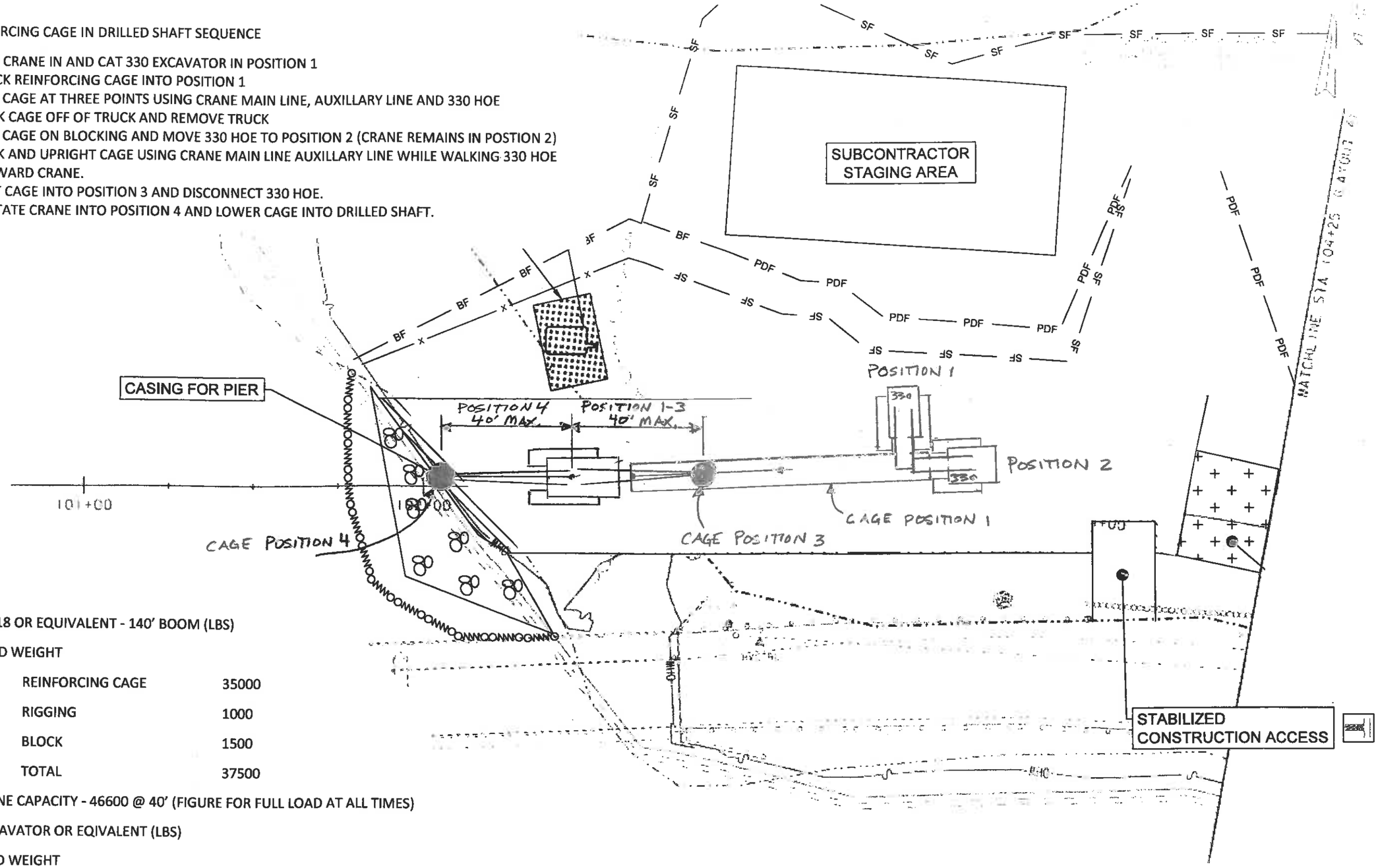

LINK BELT 218 OR EQUIVALENT - 140' BOOM (LBS)

LOAD WEIGHT

REINFORCING CAGE	35000
RIGGING	1000
BLOCK	1500
TOTAL	37500

CRANE CAPACITY - 46600 @ 40' (FIGURE FOR FULL LOAD AT ALL TIMES)

CAT 330 EXCAVATOR OR EQIVALENT (LBS)

LOAD WEIGHT

REINFORCING CAGE	35000
RIGGING	500
SUBTOTAL	35500
TOTAL (HOE CARRIES 50%)	17750

HOE CAPACITY 18650 @ 20' HORIZONTAL & 15' VERTICAL

Kubricky Construction Corp.

Drilled Shaft Reinforcing Lifting Plan

VTRANS BRF 3000 (16)

12/19/14