Design Submittal

Temporary Cofferdam at Abutment No. 1

River Street over Otter Creek
Rutland, VT

State of Vermont Agency of Transportation

Project Name: Rutland City
Project No.: BRF 3000 (16)

Prepared for:

Kubricky Construction Corp.
295 Ballard Road
Wilton, NY 12831

Prepared by:

William J. Frank Engineering, P.C.
4 Old Route 6
Brewster, NY 10509
845-490-1393

December 11, 2014
Revised December 30, 2014

Job No. 14-049.01

SUPPORTING DESIGN CALCULATIONS

References:

1. Contract Drawings from State of Vermont Agency of Transportation for 'Rutland City' Project No. BRF 3000 (16)
2. AISC Manual of Steel Construction 14th Edition.

Introduction:

This submittal addresses the design of the temporary cofferdam to be used for construction of Abutment No. 1 for the River Street Bridge over Otter Creek. The cofferdam will be approximately 100 feet by 18 feet in plan, and will have a height from ground surface to bottom of tremie concrete seal of 28 feet. Design high water elevation will be 525 feet.

A uniform vertical surcharge of 250 psf is assumed at the top of the wall to represent construction equipment and traffic load from the nearby River Street.

Per the borings on the contract drawings, the soil consists of a very compact sand and/or gravel. For design purposes the soil is considered granular with a friction angle of 37 degrees, a moist unit weight of 120 pcf and a saturated unit weight of 135 pcf.

The following calculations are included in this submittal:

- Estimate of the required tremie concrete thickness
- Shoring calculations to determine bracing loads, required sheetpile size and embedment.
- Calculations to check structural members to be used as bracing and check of connections.
- Calculations to check bracing connection to sheet piles.

William J. Frank Engineering, P.C.
Construction, GeoStructural, Structural
& Value Engineering
4 Old Route 6, Brewster, NY 10509
www.WilliamJFrankEngineering.com

SOIL PROPERTIES FOR COFFERDAM DESIGN

Reference: boring B-101, B-102, B-102A

material is generally fill from about el. 522' to el. 530'. Then dense to v. dense sand and gravel below. Top of sheets will be @ el. 525' 1

Soil profile for cofferdam:

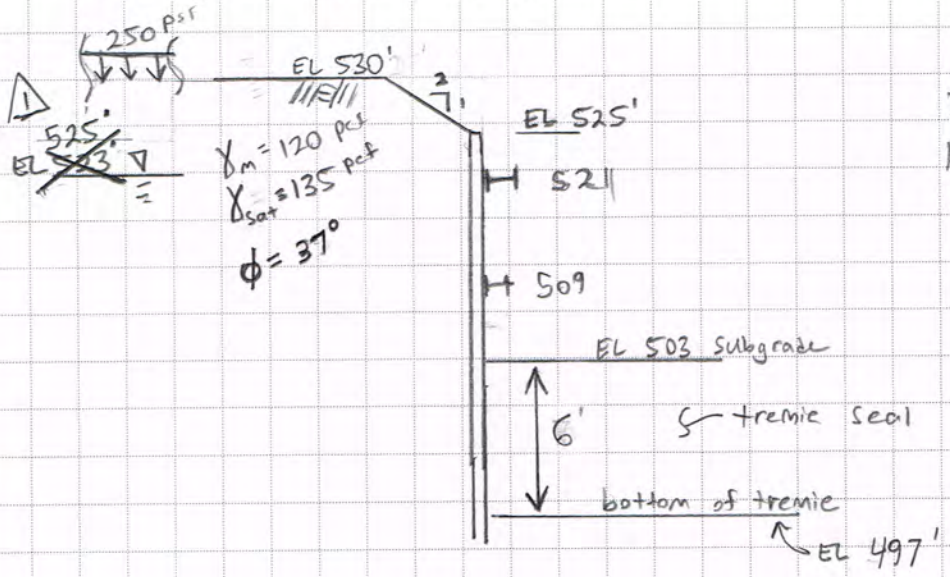

$K_a = 0.25$
$K_p = 4.0$
$\gamma_b = 135 - 62 = 73$ lb/ft³

Brace @ EL 521' and EL 509'

William J. Frank Engineering, P.C.
Construction, GeoStructural, Structural
& Value Engineering
4 Old Route 6, Brewster, NY 10509
www.WilliamJFrankEngineering.com

DETERMINE HEIGHT OF TREMIE SEAL

try 6' deep tremie seal

tremie footprint = 1500 sf

uplift = (525+497) × 62.4 lbs/cf × 1500 sf = 2620800 lbs = 2621 k 1

tremie weight = 6' × 1500 sf × 145 pcf = 1305000 lbs = 1305 k

net uplift = 1316 k

Consider abutment piles to resist uplift

Determine uplift of abutment pile group on following page.

Nominal uplift resistance = 1520 k (battered piles (19 Total)) + 561 k (Straight piles (19 total)) = 2081 k

Consider adhesion to sheeting. Use 2 psi on (4' × 240') × 144 in²/ft² (6" thick − 2') 1

total resistance from sheeting = 2 psi × 4' × 240' × 144 in²/ft² = 276480 lbs. 1

= 276 k 1

Check weight of sheeting = 30' long × 240' × 74 lbs/ft = 532800 lbs
= 533 k > 276 k 1

F.s. against uplift = $\frac{1305 + 2081 + 276}{2621}$ = 1.40 > 1.25 ∴ say OK 1 1

William J. Frank Engineering, P.C.
Construction, GeoStructural, Structural
& Value Engineering
4 Old Route 6, Brewster, NY 10509
www.WilliamJFrankEngineering.com

ESTIMATE PILE UPLIFT RESISTANCE

per AASHTO 10.7.3.10 estimate uplift resistance per AASHTO 10.7.3.8.6.

$R_s = q_s A_s$

$q_s = K_\delta C_F \sigma_v' \frac{\sin(\delta+\omega)}{\cos\omega}$ $\qquad \sigma_v' = (135^{pcf} - 62^{pcf})(29'/2) = 1059^{psf}$

$V = 34.4\ in^2/144 \times 1' = 0.24\ ft^3/ft$ $\qquad K_\delta = 1.15$ (figure 10.7.3.8.6f-3)

$\delta/\phi = 0.85$ (figure 10.7.3.8.6f-6) $\qquad \delta = 0.85(35°) = 30°$ $\qquad \phi = 37°$ say OK

$C_F = 0.93$ (figure 10.7.3.8.6f-5)

$q_s = 1.15(0.93)(1.06^{ksf})\sin(30°) = 0.57^{ksf}$

$A_s = \left[(14.2''/12 \times 2) + (14.9''/12 \times 2)\right] \times 29' = 141^{sf}$

$R_s = 0.57^{ksf} \times 141^{sf} = 80^k$

Pile group uplift resistance per AASHTO 10.7.3.11

$R_{ug} = 19 \times 80^k = 1520^k$ ← controls

OR based on uplift of the soil

only soil adjacent to battered piles considered

$V_{soil} = (8 + 29/4) \times (1 + 29/4) \times 29' = 22789^{cf}$

length, width, height

$R_{ug} = (135-62) \times 22789^{cf} = 1663597^{lbs} = 1664^k$

For straight piles consider friction between tremie concrete & steel

$10^{psi} \times 5' \times 4.6' \times 144^{in^2}/ft^2 = 33^{k/pile} < 80^k$ ∴ use $33^k \times 17^{piles} = 561^k$ for straight piles.

William J. Frank Engineering, P.C.
Construction, GeoStructural, Structural
& Value Engineering
4 Old Route 6, Brewster, NY 10509
www.WilliamJFrankEngineering.com

PRESSURE DIAGRAMS -

Stage (1)

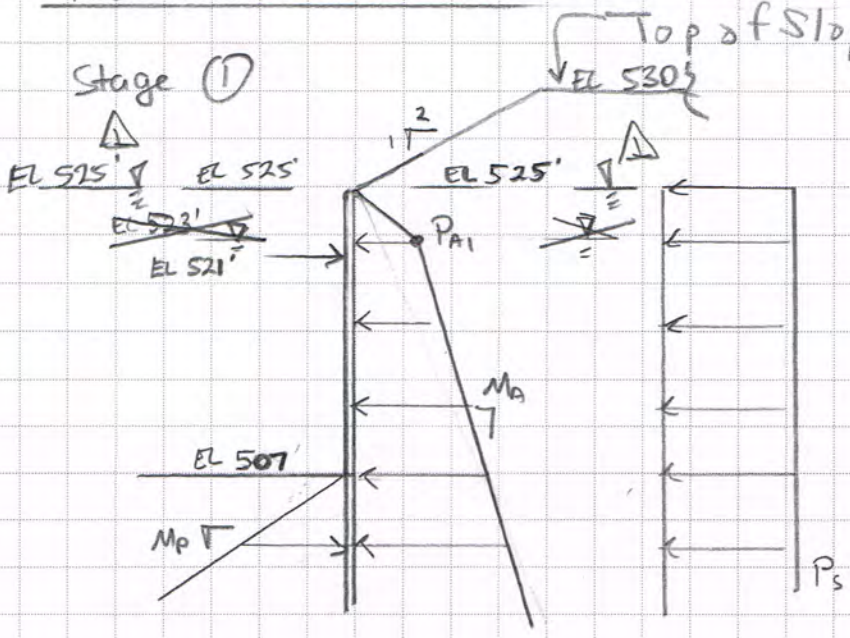

$P_{A1} = 2'(0.120\ kcf)(0.25)$
$= \cancel{0.06\ ksf} \rightarrow 0$ △1

$M_A = 0.25(0.073\ kcf) = 0.0183\ ksf/ft$

$P_S = [250\ psf + (5 \times 120)](0.25) = 0.213$

weight of soil from slope

$M_P = 4.0(0.073\ kcf) = 0.292\ ksf/ft$

Stage (2)

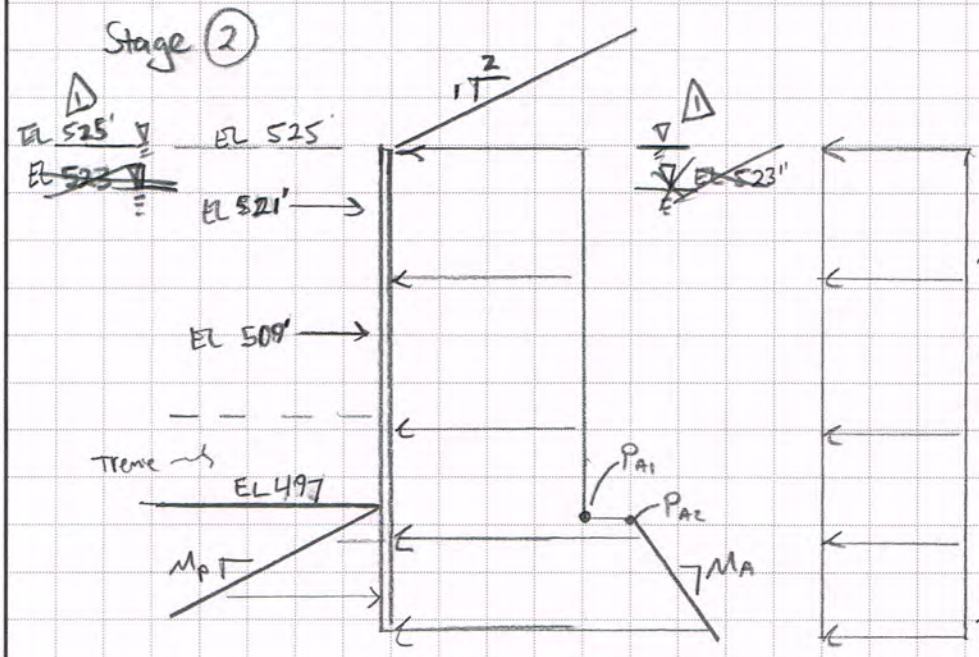

$\gamma_{Avg} = \dfrac{2(120) + 26(0.073)}{28'} = 0.076\ kcf$

$P_{A1} = 0.65\, K_A\, \gamma_{Avg}\, h$

$P_{A1} = (0.65)(28)(0.076)(0.25) = 0.346\ ksf$

$P_{A2} = 28(0.076)(0.25) = 0.532\ ksf$

$M_A = 0.0183\ ksf/ft$

$M_P = 0.292\ ksf/ft$

$P_S = 0.213$

△1 Note: for stage 1 and 2 sheeting analysis water elevation increase to EL. 525' will reduce pressure on wall because water is on both sides of sheeting and increased water elevation will decrease unit weight of soil. Stage 1 and 2 CT-Shoring analysis is not changed

William J. Frank Engineering, P.C.
Construction, GeoStructural, Structural
& Value Engineering
4 Old Route 6, Brewster, NY 10509
www.WilliamJFrankEngineering.com

Stage 3

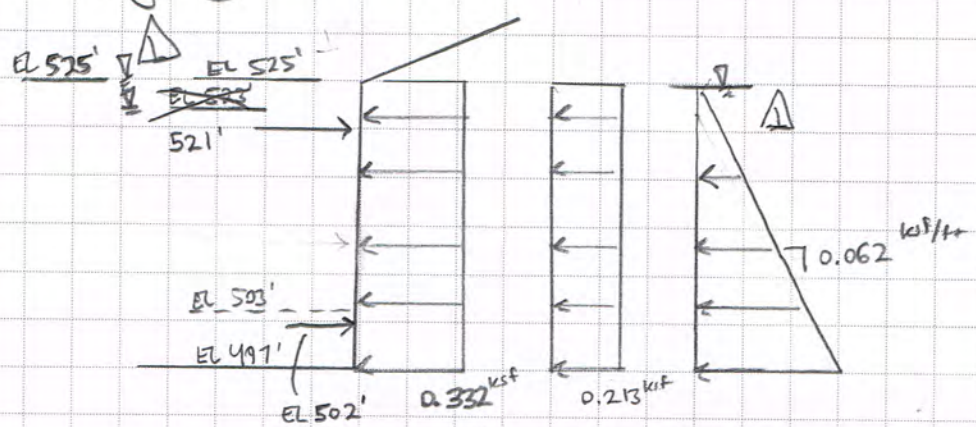

$0.65(0.25)(0.073)(28') = 0.332$ ksf

Stage 4

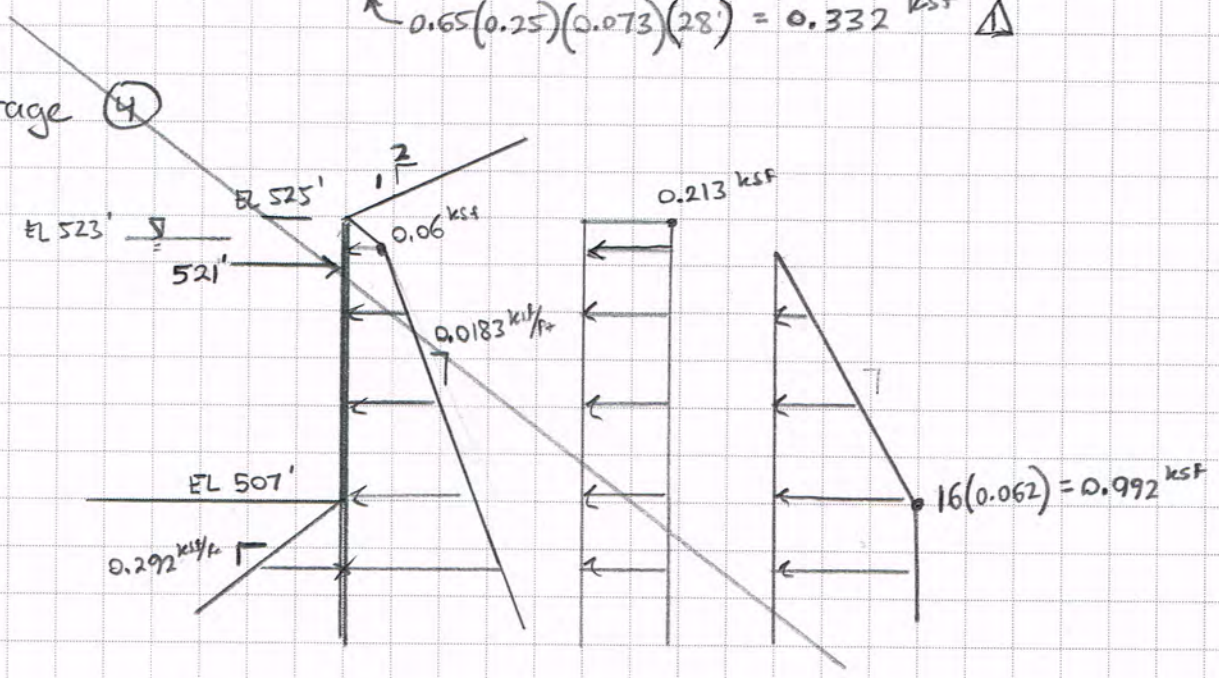

William J. Frank Engineering, P.C.
Construction, GeoStructural, Structural
& Value Engineering
4 Old Route 6, Brewster, NY 10509
www.WilliamJFrankEngineering.com

CT-SHORING RESULTS

S_x required = 13.6 in^3/ft < 48.4 in^3/ft ∴ PZC26 OK

tip el. 490' or deeper (7' embedment)

upper brace force = 12.8 k/ft

interim brace force = 12.0 k/ft

force on tremie = 26.9 k/ft

River Road Cofferdam

Stage 1

BY DJF 11-19-14
Chk CJF 11-23-14

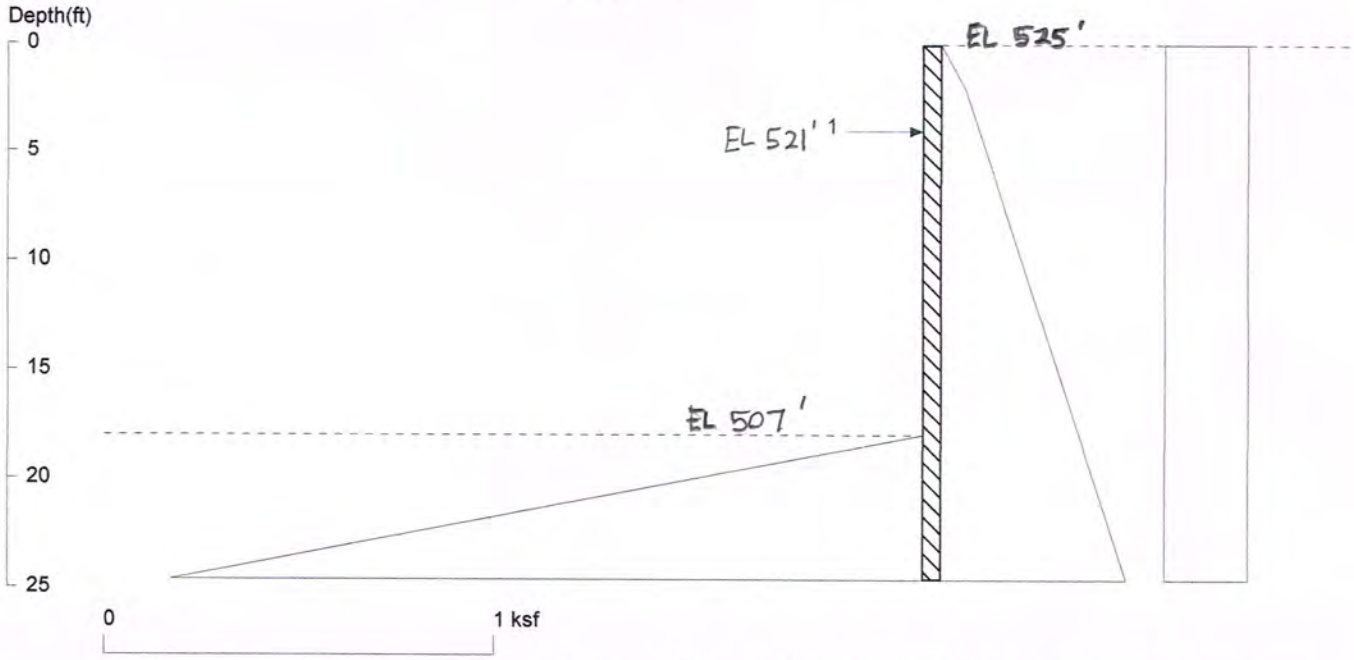

<ShoringSuite> CIVILTECH SOFTWARE USA www.civiltechsoftware.com

Licensed to 4324324234 3424343 Date: 11/19/2014

File: P:\Project Files\2014\14-049 Rutland VT Bridges (Kubricky)\14-049.01 Rutland VT Bridges\Calculations\River Road S

Wall Height=18.0 Pile Diameter=1.0 Pile Spacing=1.0 Wall Type: 1. Sheet Pile

x1.2 = 7.9' to el. 499'

PILE LENGTH: Min. Embedment=6.60 (8~10ft is recommended!!!) Min. Pile Length=24.60 (in graphics and analysis)
MOMENT IN PILE: Max. Moment=18.50 per Pile Spacing=1.0 at Depth=13.77

PILE SELECTION:
Request Min. Section Modulus = 6.7 in3/ft=361.66 cm3/m, Fy= 50 ksi = 345 MPa, Fb/Fy=0.66
-> Piles meet Min. Section Requirements: Top Deflection is shown in (in)

CS60 (-1.26) NSZ10 (-0.94) NSZ11 (-0.86) CS69 (-1.08) SZ12 (-0.71)
CS76 (-0.98) NSZ12 (-0.74) SZ14 (-0.71) SZ15 (-0.71) NSZ14 (-0.65)
CZ67 (-0.61) PDA27 (-0.65) NSZ15 (-0.62) CZ72 (-0.56)

BRACE FORCE: Strut, Tieback, Plate Anchor, and Deadman

No. & Type	Depth	Angle	Space	Total F.	Horiz. F.	Vert. F.	N/A	N/A
1. Strut	4.0	0.0	1.0	5.0	5.0	0.0	0.0	0.0

UNITS: Width,Diameter,Spacing,Length,Depth,and Height - ft; Force - kip; Bond Strength and Pressure - ksf

DRIVING PRESSURES (ACTIVE, WATER, & SURCHARGE):

Z1	P1	Z2	P2	Slope
0	0	2	.06	0.030000
2	.06	50	0.935	0.018318
0	.213	50	0.213	0

PASSIVE PRESSURES:

Z1	P1	Z2	P2	Slope
18	0	50	9.344	.292

ACTIVE SPACING:

No.	Z depth	Spacing
1	0.00	1.00
2	18.00	1.00

PASSIVE SPACING:

BY DJ 11-19-14 9/40

Chk CJF 11-23-14

No.	Z depth	Spacing
1	0.00	1.00

UNITS: Width,Spacing,Diameter,Length,and Depth - ft; Force - kip; Moment - kip-ft
Friction,Bearing,and Pressure - ksf; Pres. Slope - kip/ft3; Deflection - in

River Road Cofferdam
Stage 2

BY DJF 11-19-14 10/40
Chk CJF 11-23-14

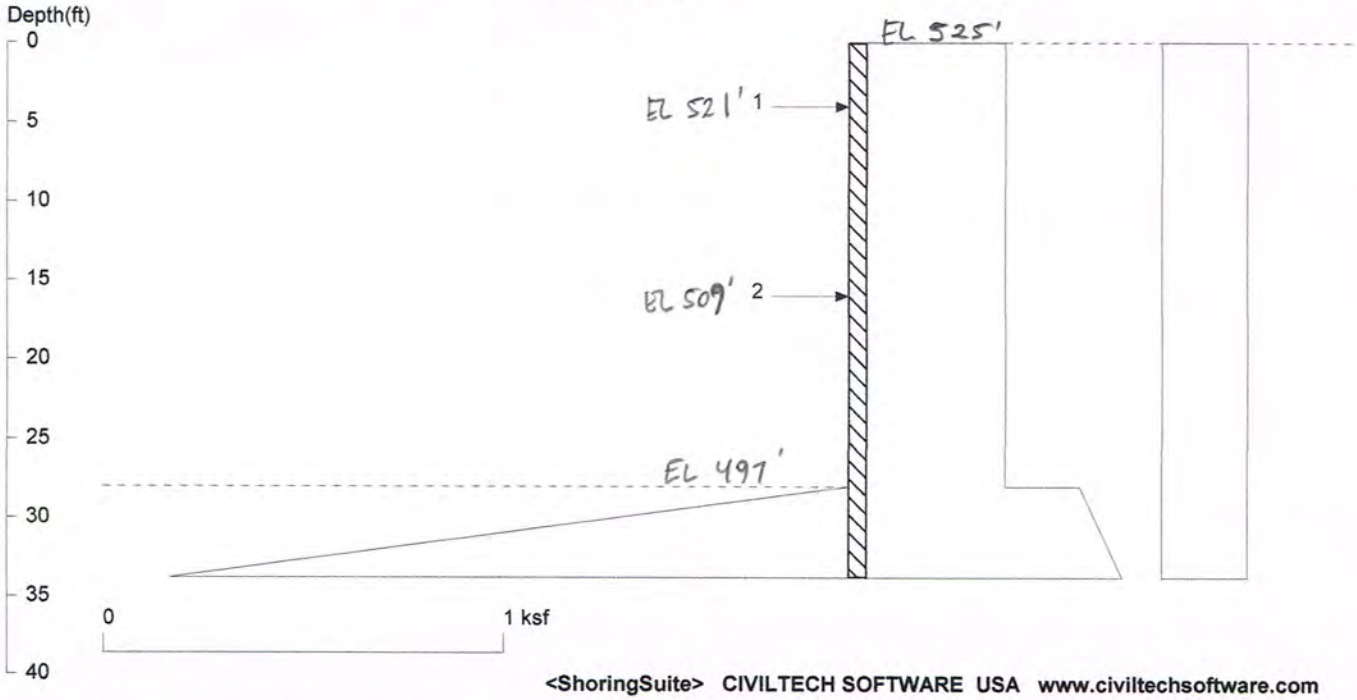

<ShoringSuite> CIVILTECH SOFTWARE USA www.civiltechsoftware.com

Licensed to 4324324234 3424343 Date: 11/19/2014

File: P:\Project Files\2014\14-049 Rutland VT Bridges (Kubricky)\14-049.01 Rutland VT Bridges\Calculations\River Road S

Wall Height=28.0 Pile Diameter=1.0 Pile Spacing=1.0 Wall Type: 1. Sheet Pile

x1.2 = 7' tip el. 490' controls.

PILE LENGTH: Min. Embedment=5.80 (8~10ft is recommended!!!) Min. Pile Length=33.80 (in graphics and analysis)
User inputted Embedment=5.80, Pile Length=33.80

MOMENT IN PILE: Max. Moment=32.43 per Pile Spacing=1.0 at Depth=15.99

PILE SELECTION:

Request Min. Section Modulus = 11.8 in3/ft=633.88 cm3/m, Fy= 50 ksi = 345 MPa, Fb/Fy=0.66

-> Piles meet Min. Section Requirements: Top Deflection is shown in (in)

1BXN (0.00) SZ14.5 (0.00) 1N (0.00) Z65 (0.00) CZ84 (0.00)
BZ7 (0.00) H95 (0.00) SZ145U (0.00) CZ14 (0.00) Z70 (0.00)
CZ95RD (0.00) CZ95 (0.00) Z75 (0.00) CZ16 (0.00)

BRACE FORCE: Strut, Tieback, Plate Anchor, and Deadman

No. & Type	Depth	Angle	Space	Total F.	Horiz. F.	Vert. F.	N/A	N/A
1. Strut	4.0	0.0	1.0	3.3	3.3	0.0	0.0	0.0
2. Strut	16.0	0.0	1.0	12.0	12.0	0.0	0.0	0.0

UNITS: Width,Diameter,Spacing,Length,Depth,and Height - ft; Force - kip; Bond Strength and Pressure - ksf

DRIVING PRESSURES (ACTIVE, WATER, & SURCHARGE):

Z1	P1	Z2	P2	Slope
0	.346	28	0.346	0
28	.532	50	0.935	0.018318
0	.213	50	0.213	0

PASSIVE PRESSURES:

Z1	P1	Z2	P2	Slope
28	0	50	6.424	.292

ACTIVE SPACING:

No.	Z depth	Spacing
1	0.00	1.00
2	28.00	1.00

PASSIVE SPACING:

No.	Z depth	Spacing
1	0.00	1.00

By DLF 11-19-14
Chk CSF 11-23-14

11/40

UNITS: Width,Spacing,Diameter,Length,and Depth - ft; Force - kip; Moment - kip-ft
Friction,Bearing,and Pressure - ksf; Pres. Slope - kip/ft3; Deflection - in

Replacement Sheet

River Road Cofferdam

BY DJF 12-29-14 12 R1/4
Chk WJF 12/30/14

Stage 3

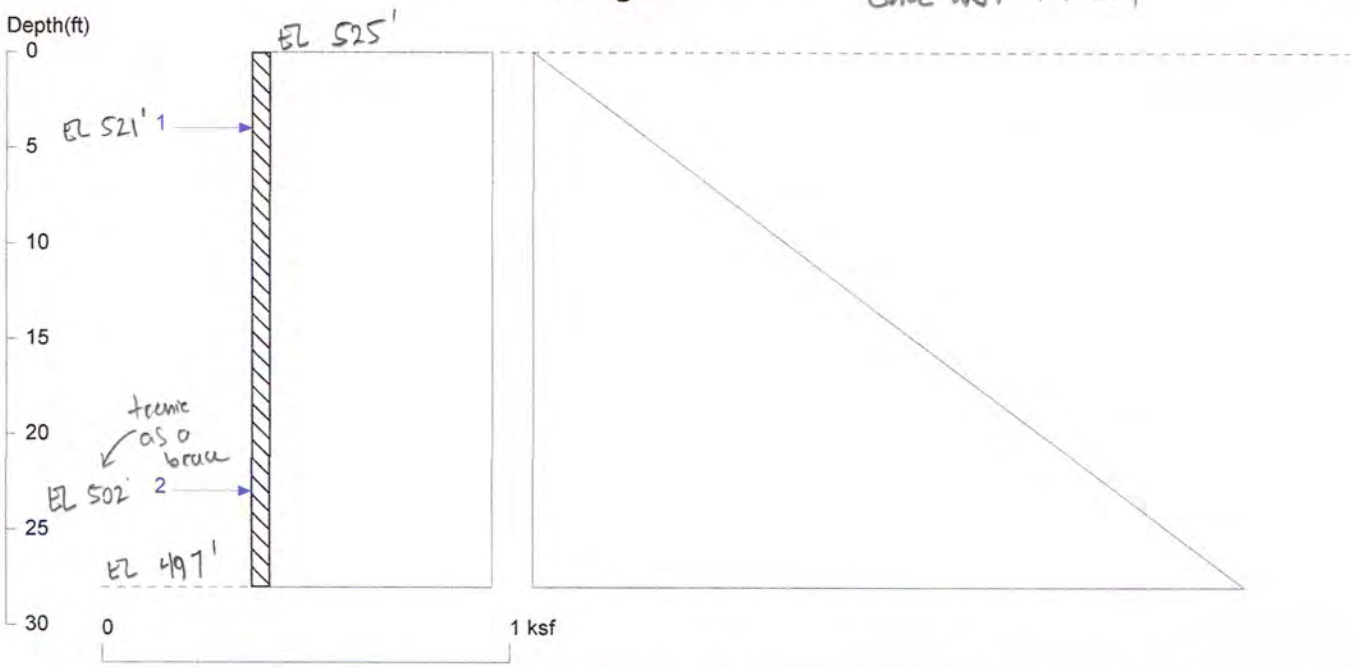

<ShoringSuite> CIVILTECH SOFTWARE USA www.civiltechsoftware.com

Licensed to 4324324234 3424343 Date: 12/29/2014

File: P:\Project Files\2014\14-049 Rutland VT Bridges (Kubricky)\14-049.01 Rutland VT Bridges\Calculations\River Road S

Wall Height=28.0 Pile Diameter=1.0 Pile Spacing=1.0 Wall Type: 1. Sheet Pile

MOMENT IN PILE: Max. Moment=37.50 per Pile Spacing=1.0 at Depth=12.58

PILE SELECTION:
Request Min. Section Modulus = 13.6 in3/ft=733.18 cm3/m, Fy= 50 ksi = 345 MPa, Fb/Fy=0.66
-> Piles meet Min. Section Requirements: Top Deflection is shown in (in)
BZ7 (0.00) H95 (0.00) SZ145U (0.00) CZ14 (0.00) Z70 (0.00)
CZ95RD (0.00) CZ95 (0.00) Z75 (0.00) CZ16 (0.00) BZ8.6 (0.00)
SZ18 (0.00) CZ101 (0.00) SPZ19-5 (0.00) SZ250 (0.00)

BRACE FORCE: Strut, Tieback, Plate Anchor, and Deadman

No. & Type	Depth	Angle	Space	Total F.	Horiz. F.	Vert. F.	N/A	N/A
1. Strut	4.0	0.0	1.0	12.8	12.8	0.0	0.0	0.0
2. Strut	23.0	0.0	1.0	26.9	26.9	0.0	0.0	0.0

UNITS: Width,Diameter,Spacing,Length,Depth,and Height - ft; Force - kip; Bond Strength and Pressure - ksf

DRIVING PRESSURES (ACTIVE, WATER, & SURCHARGE):

Z1	P1	Z2	P2	Slope
0	.545	28	0.545	0
0	0	28	1.747	.0624

PASSIVE PRESSURES:

Z1	P1	Z2	P2	Slope

ACTIVE SPACING:

No.	Z depth	Spacing
1	0.00	1.00
2	28.00	1.00

PASSIVE SPACING:

No.	Z depth	Spacing
1	0.00	1.00

BY DLF 11-19-14
CHK CJF 11-23-14

13/40

UNITS: Width,Spacing,Diameter,Length,and Depth - ft; Force - kip; Moment - kip-ft
Friction,Bearing,and Pressure - ksf; Pres. Slope - kip/ft3; Deflection - in

Software licensed to William J. Frank Engineering	Job No 14-049.01	Sheet No 1	Rev
Job Title	Part		
	Ref		
	By DLF	Date 21-Nov-14	Chd CJF
Client	File River Street Bracing.std	Date/Time 04-Dec-2014 10:59	

Nodes

Node	X (ft)	Y (ft)	Z (ft)
1	-18.772	18.772	0.000
2	-7.379	7.379	0.000
3	0.000	0.000	0.000
4	8.000	0.000	0.000
5	27.000	0.000	0.000
6	46.000	0.000	0.000
7	53.500	0.000	0.000
8	61.705	4.748	0.000
9	74.134	12.017	0.000
10	-7.458	30.085	0.000
11	3.935	18.692	0.000
12	8.000	16.000	0.000
13	27.000	16.000	0.000
14	46.000	16.000	0.000
15	53.729	18.618	0.000
16	66.138	25.876	0.000

Beams

Beam	Node A	Node B	Length (ft)	Property	β (degrees)
1	1	2	16.112	1	0
2	2	3	10.435	1	0
3	3	4	8.000	1	0
4	4	5	19.000	1	0
5	5	6	19.000	1	0
6	6	7	7.500	1	0
7	7	8	9.480	1	0
8	9	8	14.398	1	0
9	1	10	16.000	2	0
10	2	11	16.000	2	0
11	4	12	16.000	2	0
12	5	13	16.000	2	0
13	6	14	16.000	2	0
14	8	15	16.000	2	0
15	9	16	16.000	2	0

Section Properties

Prop	Section	Area (in^2)	I_{yy} (in^4)	I_{zz} (in^4)	J (in^4)	Material
1	W30X99	29.100	128.000	3.99E+3	3.454	STEEL
2	HSSP10X0.5	13.900	159.000	159.000	317.349	STEEL

Software licensed to William J. Frank Engineering	Job No 14-049.01	Sheet No 2	Rev
Job Title	Part		
	Ref		
	By DLF	Date 21-Nov-14	Chd CJF
Client	File River Street Bracing.std	Date/Time 04-Dec-2014 10:59	

Materials

Mat	Name	E (kip/in^2)	ν	Density (kip/in^3)	α (/°F)
1	STEEL	29E+3	0.300	0.000	6E -6
2	STAINLESSSTEEL	28E+3	0.300	0.000	10E -6
3	ALUMINUM	10E+3	0.330	0.000	13E -6
4	CONCRETE	3.15E+3	0.170	0.000	5E -6

Supports

Node	X (kip/in)	Y (kip/in)	Z (kip/in)	rX (kip˙ft/deg)	rY (kip˙ft/deg)	rZ (kip˙ft/deg)
1	-	-	Fixed	-	-	-
2	-	-	Fixed	-	-	-
4	-	-	Fixed	-	-	-
5	-	-	Fixed	-	-	-
6	-	-	Fixed	-	-	-
8	-	-	Fixed	-	-	-
9	-	-	Fixed	-	-	-
10	Fixed	Fixed	Fixed	-	-	-
11	Fixed	Fixed	Fixed	-	-	-
12	Fixed	Fixed	Fixed	-	-	-
13	Fixed	Fixed	Fixed	-	-	-
14	Fixed	Fixed	Fixed	-	-	-
15	Fixed	Fixed	Fixed	-	-	-
16	Fixed	Fixed	Fixed	-	-	-

Releases

Beam ends not shown in this table are fixed in all directions.

Beam	Node	x	y	z	rx	ry	rz
2	3	Fixed	Fixed	Fixed	Pin	Pin	Pin
3	3	Fixed	Fixed	Fixed	Pin	Pin	Pin
6	7	Fixed	Fixed	Fixed	Pin	Pin	Pin
7	7	Fixed	Fixed	Fixed	Pin	Pin	Pin
9	1	Fixed	Fixed	Fixed	Pin	Pin	Pin
10	2	Fixed	Fixed	Fixed	Pin	Pin	Pin
11	4	Fixed	Fixed	Fixed	Pin	Pin	Pin
12	5	Fixed	Fixed	Fixed	Pin	Pin	Pin
13	6	Fixed	Fixed	Fixed	Pin	Pin	Pin
14	8	Fixed	Fixed	Fixed	Pin	Pin	Pin
15	9	Fixed	Fixed	Fixed	Pin	Pin	Pin

Software licensed to William J. Frank Engineering	Job No 14-049.01	Sheet No 3	Rev
Job Title	Part		
	Ref		
	By DJF	Date 21-Nov-14	Chd CJF
Client	File River Street Bracing.std	Date/Time 04-Dec-2014 10:59	

Revised DJF 12-29-14

Basic Load Cases

Number	Name
1	BRACING LOAD

Combination Load Cases

There is no data of this type.

Beam Loads : 1 BRACING LOAD

Beam	Type		Direction	Fa	Da (ft)	Fb	Db	Ecc. (ft)
1	UNI	lbf/ft	Y	12E+3	-	-	-	-
2	UNI	lbf/ft	Y	12E+3	-	-	-	-
3	UNI	lbf/ft	Y	12E+3	-	-	-	-
4	UNI	lbf/ft	Y	12E+3	-	-	-	-
5	UNI	lbf/ft	Y	12E+3	-	-	-	-
6	UNI	lbf/ft	Y	12E+3	-	-	-	-
7	UNI	lbf/ft	Y	12E+3	-	-	-	-
8	UNI	lbf/ft	Y	12E+3	-	-	-	-
9	UNI	lbf/ft	Y	-12E+3	-	-	-	-
15	UNI	lbf/ft	Y	-12E+3	-	-	-	-

12.8 k/ft brace force ∴ Brace force 7% higher than force in STAAD model.

By inspection, wales, struts, and connections are still OK brace over designed by more than 7%

Beam Maximum Axial Forces

Distances to maxima are given from beam end A.

Beam	Node A	Length (ft)	L/C		d (ft)	Max Fx (kip)
1	1	16.112	1:BRACING LC	Max -ve	0.000	96.000
				Max +ve		
2	2	10.435	1:BRACING LC	Max -ve	0.000	96.000
				Max +ve		
3	3	8.000	1:BRACING LC	Max -ve	0.000	102.696
				Max +ve		
4	4	19.000	1:BRACING LC	Max -ve	0.000	102.696
				Max +ve		
5	5	19.000	1:BRACING LC	Max -ve	0.000	102.696
				Max +ve		
6	6	7.500	1:BRACING LC	Max -ve	0.000	102.696
				Max +ve		
7	7	9.480	1:BRACING LC	Max -ve	0.000	97.368
				Max +ve		
8	9	14.398	1:BRACING LC	Max -ve	0.000	96.435
				Max +ve		
9	1	16.000	1:BRACING LC	Max -ve	0.000	88.009
				Max +ve		

Compression load at shear splice connection

max. wale axial load

Max axial for end wales

Software licensed to William J. Frank Engineering	Job No 14-049.01	Sheet No 4	Rev
Job Title	Part		
	Ref		
	By DJF	Date 21-Nov-14	Chd CJF
Client	File River Street Bracing.std	Date/Time 04-Dec-2014 10:59	

Beam Maximum Axial Forces Cont...

Beam	Node A	Length (ft)	L/C		d (ft)	Max Fx (kip)
10	2	16.000	1:BRACING LC	Max -ve	0.000	181.322
				Max +ve		
11	4	16.000	1:BRACING LC	Max -ve	0.000	160.809
				Max +ve		
12	5	16.000	1:BRACING LC	Max -ve	0.000	255.455
				Max +ve		
13	6	16.000	1:BRACING LC	Max -ve	0.000	175.731
				Max +ve		
14	8	16.000	1:BRACING LC	Max -ve	0.000	176.162
				Max +ve		
15	9	16.000	1:BRACING LC	Max -ve	0.000	73.722
				Max +ve		

Max Strut Axial Load

Software licensed to William J. Frank Engineering	Job No 14-049.01	Sheet No 1	Rev
	Part		
Job Title	Ref		
	By DJF	Date 21-Nov-14	Chd CJK
Client	File River Street Bracing.std	Date/Time 04-Dec-2014 10:59	

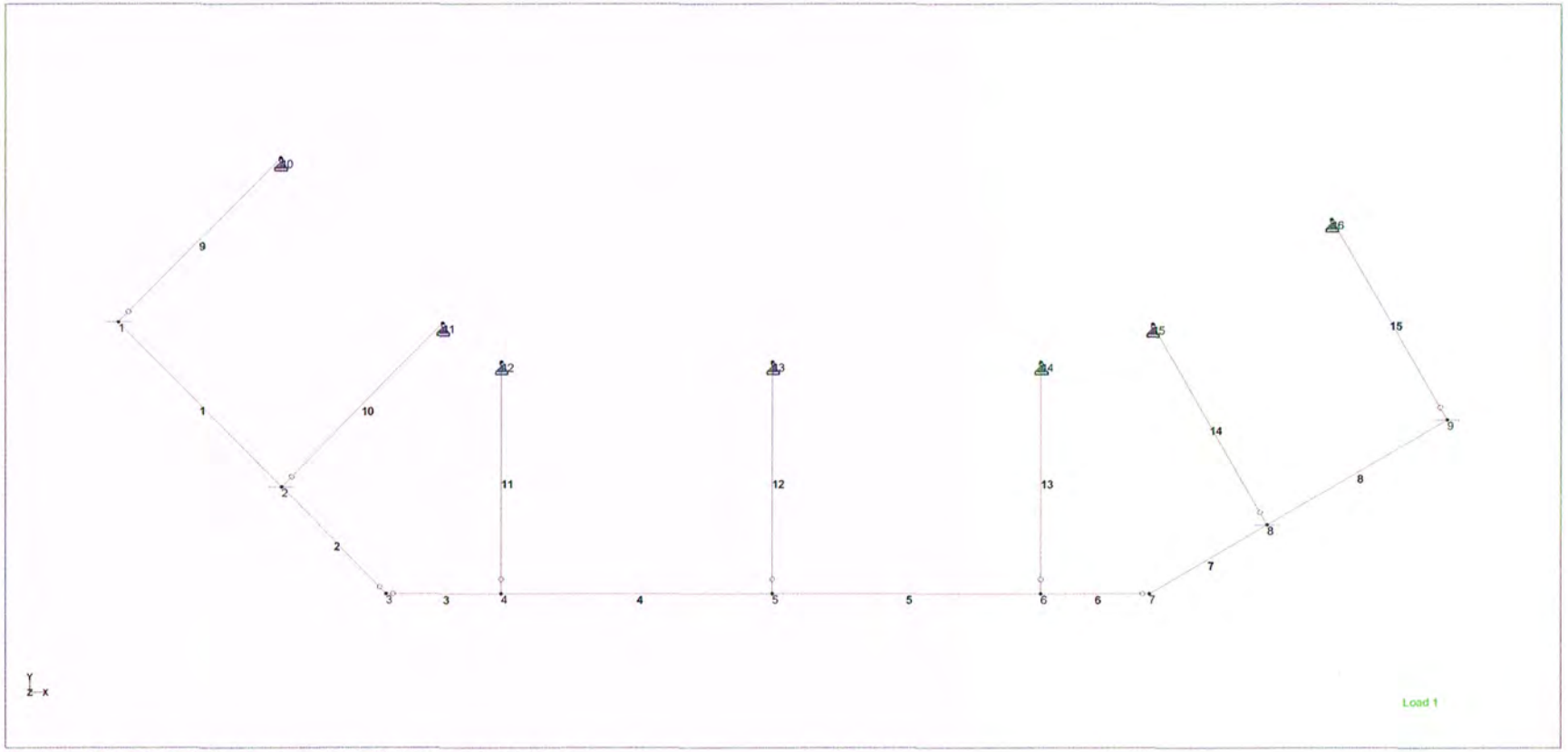

Node and Beam Labels (Input data was modified after picture taken)

18/40

Software licensed to William J. Frank Engineering	Job No 14-049.01	Sheet No 3	Rev
Job Title	Part		
	Ref		
	By DJF	Date 21-Nov-14	Chd CJF
Client	File River Street Bracing.std	Date/Time 04-Dec-2014 10:59	

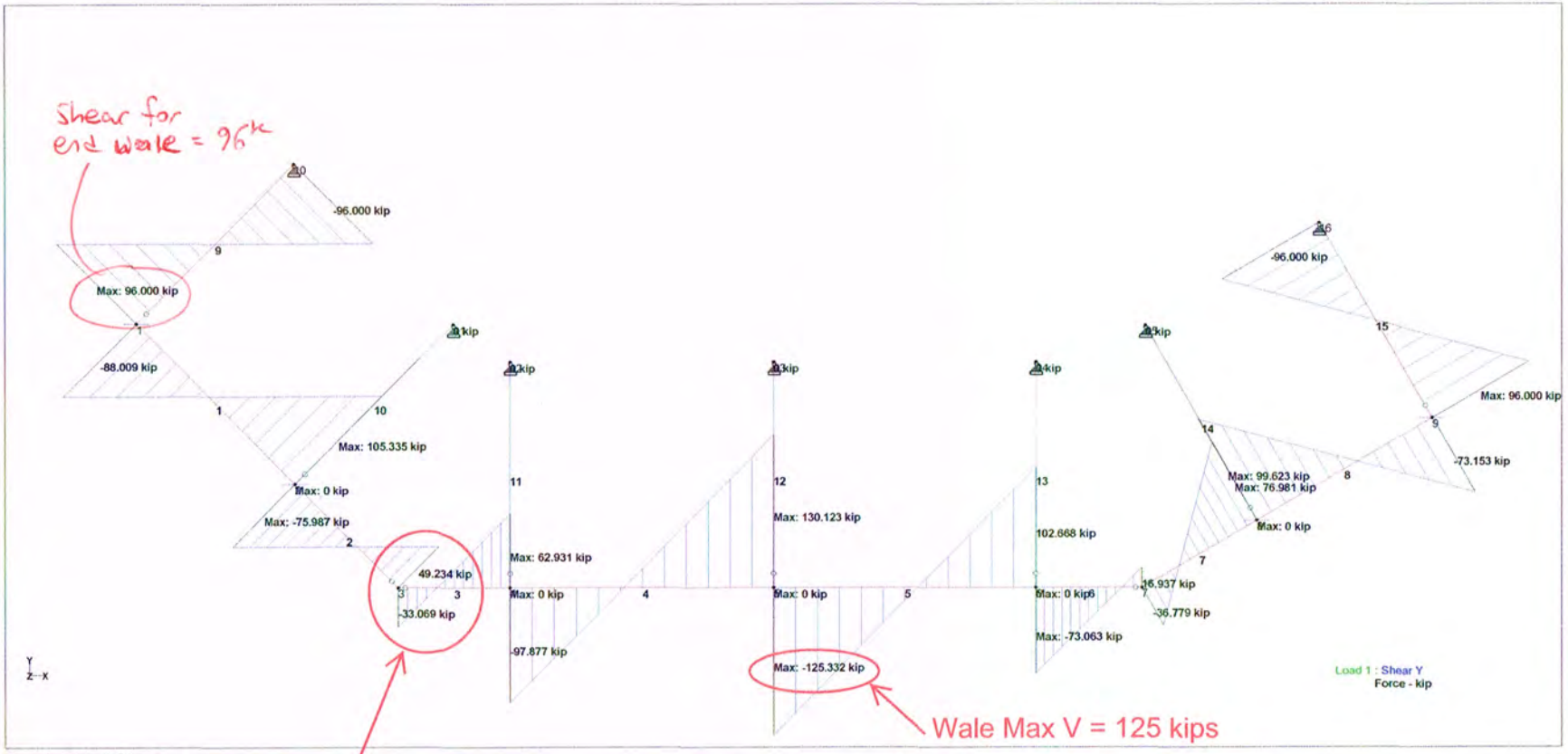

Bracing End Shears

Connection Shear:
49 kips & 33 kips

19/40

Software licensed to William J. Frank Engineering	Job No 14-049.01	Sheet No 2	Rev
	Part		
Job Title	Ref		
	By DJF	Date 21-Nov-14	Chd
Client	File River Street Bracing.std	Date/Time 04-Dec-2014 10:59	

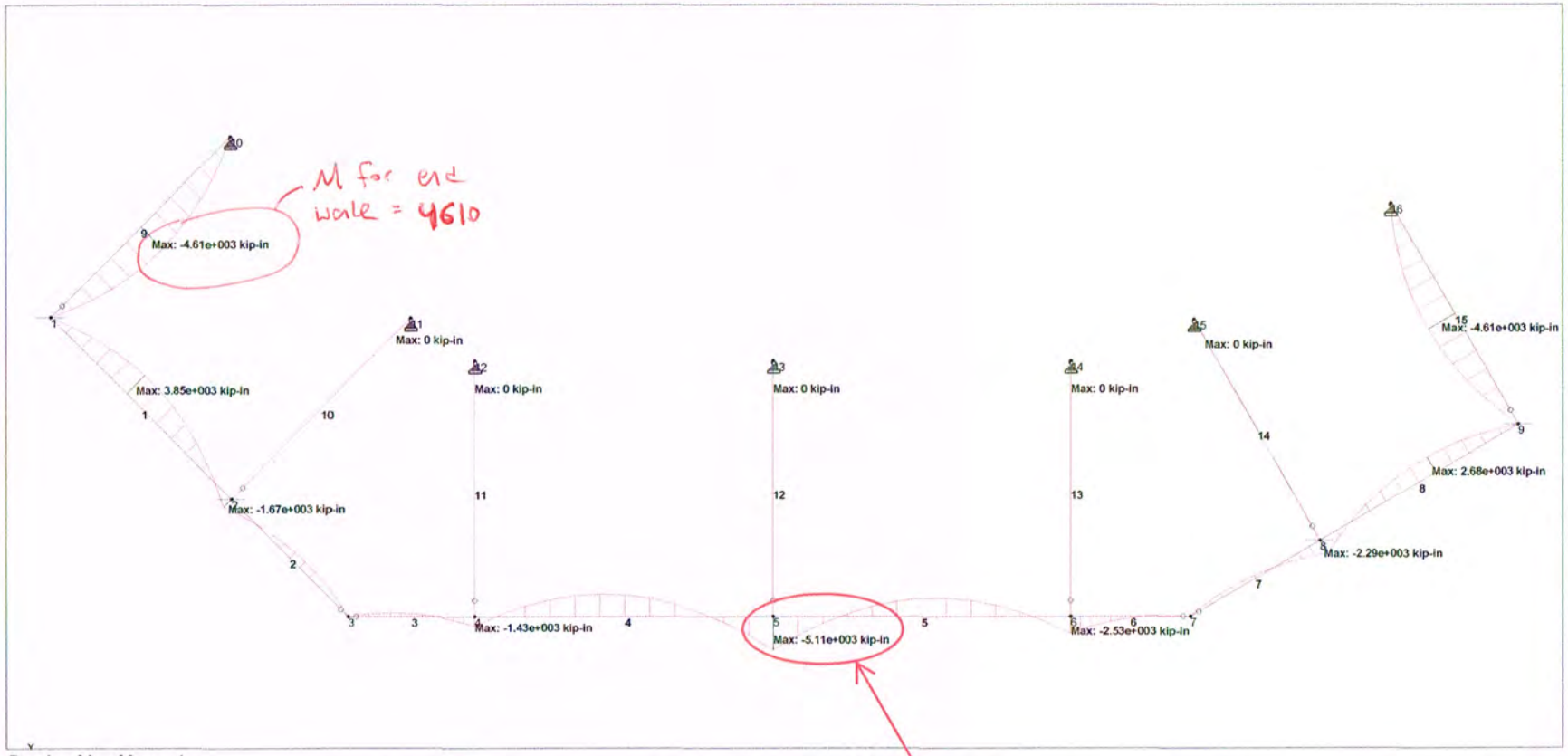

Bracing Max Moments

20/40

William J. Frank Engineering, P.C.
Construction, GeoStructural, Structural
& Value Engineering
4 Old Route 6, Brewster, NY 10509
www.WilliamJFrankEngineering.com

CHECK W30x99 WALES

MOMENT CAPACITY OF ROLLED W SHAPE: **Wales**

This spreadsheet determines the allowable moment of a rolled W-shape in accordance with AISC 14th Edition Section F2 Note: Compact flanges and webs are assumed

Member Information:

Designation:	W30x99		
Zx =	312 in^3	rts =	2.62 in
Zy =	38.6 in^3	ry =	2.1 in
Sx =	269 in^3	J =	3.77 in^4
Sy =	24.5 in^3	ho =	29 in

Mp = Fy * Zx = 15600 kip-in

$$L_p = 1.76 r_y \sqrt{\frac{E}{F_y}} \qquad \text{(F2-5)}$$

$$L_r = 1.95 r_{ts} \frac{E}{0.7F_y} \sqrt{\frac{J_c}{S_x h_o}} \sqrt{1 + \sqrt{1 + 6.76\left(\frac{0.7F_y}{E}\frac{S_x h_o}{J_c}\right)}} \qquad \text{(F2-6)}$$

Lp = 7.42 ft
Lr = 21.34 ft

STRONG AXIS

Mnx is governed by one of the following equations:

Lb < Lp use F2-1; Lp<Lb<Lr use F2-2; Lb>Lr use F2-3 and F2-4

$$M_n = M_p = F_y Z_x \qquad \text{(F2-1)}$$

$$M_n = C_b\left[M_p - \left(M_p - 0.7F_y S_x\right)\left(\frac{L_b - L_p}{L_r - L_p}\right)\right] \le M_p \qquad \text{(F2-2)}$$

$$M_n = F_{cr} S_x \le M_p \qquad \text{(F2-3)}$$

$$F_{cr} = \frac{C_b \pi^2 E}{\left(\frac{L_b}{r_{ts}}\right)^2}\sqrt{1 + 0.078\frac{J_c}{S_x h_o}\left(\frac{L_b}{r_{ts}}\right)^2} \qquad \text{(F2-4)}$$

Mnx =	10453.16 kip-in	=	871.0966 kip-ft	
Mcx = Mnx/1.67 =	6259.38 kip-in	=	521.61 kip-ft	**426.00 kip-ft**

WEAK AXIS

$$M_n = M_p = F_y Z_y \leq 1.6 F_y S_y \qquad \text{(F6-1)}$$

Mny =	1930.00 kip-in	=<	1960.00 kip-in	**OK**
Mcy = Mny/1.67 =	1155.69 kip-in	=	96.31 kip-ft	**7.00 kip-ft**

SHEAR CAPACITY OF ROLLED W SHAPE: **All Wales**

This spreadsheet determines the allowable moment of a rolled W-shape in accordance with AISC 14th Edition Section G. Only applicable to members where Cv = 1

$$V_n = 06 F_y A_{web} C_v \qquad \text{(G2-1)}$$

Cv = 1

d =	29.7 in			
tw =	0.52 in			
Fy =	50 ksi			
Vn =	463.32 kips			
Vn / 1.67	277.44 kips	>	**125.00 kips**	Therefore OK

AXIAL CAPACITY OF ROLLED W SHAPE: **Wales** **BY:**
CK:

This spreadsheet determines the allowable axial load of a rolled W-shape in accordance with AISC 14th Edition Section E3 Note: Compact flanges and webs are assumed

Member Information:

Designation:	W30x99		
Zx =	312 in^3	rts =	2.62 in
Zy =	38.6 in^3	ry =	2.1 in
Sx =	269 in^3	J =	3.77 in^4
Sy =	24.5 in^3	ho =	29 in
Ag =	29 in^2		

$$F_e = \frac{\pi^2 E}{\left(\frac{KL}{r}\right)^2} \qquad \text{(E3-4)}$$

Fe = 37.76 ksi

Pn is governed by one of the following equations:

(a) When $\frac{KL}{r} \leq 4.71\sqrt{\frac{E}{F_y}}$ (or $\frac{F_y}{F_e} \leq 2.25$)

$$F_{cr} = \left[0.658^{\frac{F_y}{F_e}}\right] F_y \qquad \text{(E3-2)}$$

(b) When $\frac{KL}{r} > 4.71\sqrt{\frac{E}{F_y}}$ (or $\frac{F_y}{F_e} > 2.25$)

$$F_{cr} = 0.877 F_e \qquad \text{(E3-3)}$$

Fcr = 28.72 ksi

$$P_n = F_{cr} A_g \qquad \text{(E3-1)}$$

Pn = 833.01 kips

Pc = Pn/1.67 = 498.81 kips > **101.00 kips**

William J. Frank Engineering, P.C.
Construction, GeoStructural, Structural
& Value Engineering
4 Old Route 6, Brewster, NY 10509
www.WilliamJFrankEngineering.com

COMBINED FORCES AND TORSION CAPACITY OF ROLLED W SHAPE: **Wales** **BY:** **CK:**

This spreadsheet determines the allowable forces and torsion of a rolled W-shape in accordance with AISC 14th Edition Section F2

Note: Compact flanges and webs are assumed

Member Information:

Designation:	W30x99		
Zx =	312 in^3	rts =	2.62 in
Zy =	38.6 in^3	ry =	2.1 in
Sx =	269 in^3	J =	3.77 in^4
Sy =	24.5 in^3	ho =	29 in

Doubly and Singly Symetric Members Subject to Flexture and Compression

(a)For $\frac{P_r}{P_c} \geq 0.2$

$$\frac{P_r}{P_c} + \frac{8}{9}\left(\frac{M_{rx}}{M_{cx}} + \frac{M_{ry}}{M_{cy}}\right) \leq 1.0 \qquad \text{(H1-1a)}$$

(a)For $\frac{P_r}{P_c} < 0.2$

$$\frac{P_r}{2P_c} + \left(\frac{M_{rx}}{M_{cx}} + \frac{M_{ry}}{M_{cy}}\right) \leq 1.0 \qquad \text{(H1-1b)}$$

Pr/Pc =	0.20	>	0.2		
therefore,	0.80	=<	1.0	OK	W30x99 ok

1 by inspection, 7% increase in brace force in wales, still ok

CHECK W18x119 END WALES

MOMENT CAPACITY OF ROLLED W SHAPE: END ~~All~~ Wales **BY:**
CK:

This spreadsheet determines the allowable moment of a rolled W-shape in accordance with AISC 14th Edition Section F2 Note: Compact flanges and webs are assumed

Member Information:

Designation:	W18x119		
Zx =	262 in^3	rts =	3.13 in
Zy =	69.1 in^3	ry =	2.69 in
Sx =	231 in^3	J =	10.6 in^4
Sy =	44.9 in^3	ho =	17.9 in

Mp = Fy * Zx = 13100 kip-in

$$L_p = 1.76 r_y \sqrt{\frac{E}{F_y}} \qquad \text{(F2-5)}$$

$$L_r = 1.95 r_{ts} \frac{E}{0.7F_y} \sqrt{\frac{J_c}{S_x h_o}} \sqrt{1 + \sqrt{1 + 6.76\left(\frac{0.7F_y}{E}\frac{S_x h_o}{J_c}\right)}} \qquad \text{(F2-6)}$$

Lp = 9.50 ft
Lr = 34.28 ft

STRONG AXIS

Mnx is governed by one of the following equations:

Lb < Lp use F2-1; Lp<Lb<Lr use F2-2; Lb>Lr use F2-3 and F2-4

Lb < Lp therefore use F2-1

$$M_n = M_p = F_y Z_x \qquad \text{(F2-1)}$$

$$M_n = C_b\left[M_p - \left(M_p - 0.7F_y S_x\right)\left(\frac{L_b - L_p}{L_r - L_p}\right)\right] \le M_p \qquad \text{(F2-2)}$$

$$M_n = F_{cr} S_x \le M_p \qquad \text{(F2-3)}$$

$$F_{cr} = \frac{C_b \pi^2 E}{\left(\frac{L_b}{r_{ts}}\right)^2}\sqrt{1 + 0.078\frac{J_c}{S_x h_o}\left(\frac{L_b}{r_{ts}}\right)^2} \qquad \text{(F2-4)}$$

BY:

				CK:
Mnx =	11784.63 kip-in	=	982.0527 kip-ft	
Mcx = Mnx/1.67 =	7056.67 kip-in	=	588.06 kip-ft	**384.00 kip-ft**

WEAK AXIS

$$M_n = M_p = F_y Z_y \leq 1.6 F_y S_y \qquad \text{(F6-1)}$$

Mny =	3455.00 kip-in	=<	3592.00 kip-in	**OK**
Mcy = Mny/1.67 =	2068.86 kip-in	=	172.41 kip-ft	**6.00 kip-ft**

SHEAR CAPACITY OF ROLLED W SHAPE: **All Wales**

This spreadsheet determines the allowable moment of a rolled W-shape in accordance with AISC 14th Edition Section G. Only applicable to members where Cv = 1

$$V_n = 06 F_y A_{web} C_v \qquad \text{(G2-1)}$$

Cv = 1

d =	19 in			
tw =	0.655 in			
Fy =	50 ksi			
Vn =	373.35 kips			
Vn / 1.67	223.56 kips	>	**96.00 kips**	Therefore OK

William J. Frank Engineering, P.C.
Construction, GeoStructural, Structural
& Value Engineering
4 Old Route 6, Brewster, NY 10509
www.WilliamJFrankEngineering.com

AXIAL CAPACITY OF ROLLED W SHAPE: END ~~All~~ Wales **BY:** **CK:**

This spreadsheet determines the allowable axial load of a rolled W-shape in accordance with AISC 14th Edition Section E3 Note: Compact flanges and webs are assumed

Member Information:

Designation:	W18x119		
Zx =	262 in^3	rts =	3.13 in
Zy =	69.1 in^3	ry =	2.69 in
Sx =	231 in^3	J =	10.6 in^4
Sy =	44.9 in^3	ho =	17.9 in
Ag =	35.1 in^2		

$$F_e = \frac{\pi^2 E}{\left(\frac{KL}{r}\right)^2} \qquad \text{(E3-4)}$$

Fe = 75.99 ksi

Pn is governed by one of the following equations:

(a) When $\frac{KL}{r} \leq 4.71\sqrt{\frac{E}{F_y}}$ (or $\frac{F_y}{F_e} \leq 2.25$)

$$F_{cr} = \left[0.658^{\frac{F_y}{F_e}}\right] F_y \qquad \text{(E3-2)}$$

(b) When $\frac{KL}{r} > 4.71\sqrt{\frac{E}{F_y}}$ (or $\frac{F_y}{F_e} > 2.25$)

$$F_{cr} = 0.877 F_e \qquad \text{(E3-3)}$$

Fcr = 37.96 ksi

$$P_n = F_{cr} A_g \qquad \text{(E3-1)}$$

Pn = 1332.51 kips

Pc = Pn/1.67 = 797.91 kips > **88.00 kips**

COMBINED FORCES AND TORSION CAPACITY OF ROLLED W SHAPE: END ~~All~~ Wales

BY:
CK:

This spreadsheet determines the allowable forces and torsion of a rolled W-shape in accordance with AISC 14th Edition Section F2

Note: Compact flanges and webs are assumed

Member Information:

Designation:	W18x119		
Zx =	262 in^3	rts =	3.13 in
Zy =	69.1 in^3	ry =	2.69 in
Sx =	231 in^3	J =	10.6 in^4
Sy =	44.9 in^3	ho =	17.9 in

Doubly and Singly Symetric Members Subject to Flexure and Compression

(a)For $\frac{P_r}{P_c} \geq 0.2$

$$\frac{P_r}{P_c} + \frac{8}{9}\left(\frac{M_{rx}}{M_{cx}} + \frac{M_{ry}}{M_{cy}}\right) \leq 1.0 \qquad \text{(H1-1a)}$$

(a)For $\frac{P_r}{P_c} < 0.2$

$$\frac{P_r}{2P_c} + \left(\frac{M_{rx}}{M_{cx}} + \frac{M_{ry}}{M_{cy}}\right) \leq 1.0 \qquad \text{(H1-1b)}$$

Pr/Pc =	0.11	<	0.2	
therefore,	0.74	=<	1.0	OK

W18x119 OK

Δ By inspection, 7% increase in brace force in wales, still OK

William J. Frank Engineering, P.C.
Construction, GeoStructural, Structural
& Value Engineering
4 Old Route 6, Brewster, NY 10509
www.WilliamJFrankEngineering.com

CHECK STRUTS

$P_r = 255^k \times 1.07 = 273^k$ △1

↖ brace force increased by 7% over STAAD model

△1 try HP12×84 84 lbs/ft add 100 lbs/ft for LL

△1 $M_r = \frac{wl^2}{8} = (0.184^{k/ft})\frac{16'^2}{8} = 6^{k\text{-}ft}$ flexure check per AISC F6 △1

△1 HP12×84 . $\lambda_f = b/t_f = 6.1/0.685 = 8.9$ $\lambda = 0.38\sqrt{E/F_y} = 0.38\sqrt{29000/50} = 9.15 > 8.9$

$\therefore M_n = Z_x f_y > 1.6 S_x F_y$

△1 $M_n = F_y Z = 50^{ksi}(53.2\ in^3) = 2660^{k\text{-}in}$ or $50^{ksi}(34.6)(1.6) = 2768^{k\text{-}in}$

△1

△1 $M_n/\Omega = M_p/\Omega = 2660^{k\text{-}in}/1.67 = 1593^{k\text{-}in} = 133^{k\text{-}ft} >> 6^{k\text{-}ft}$

Axial check per AISC E3

△1 $r = 2.94''$ $kl/r = \frac{1.0(16' \times 12)}{2.94}$ △1 $= 65$

△1 $4.71\sqrt{E/F_y} = 4.71\sqrt{29000/50} = 113$ △1 > 57

$F_{cr} = \left[0.658^{F_y/F_e}\right]F_y$ $F_e = \frac{\pi^2 E}{\left(\frac{kL}{r}\right)^2} = \frac{\pi^2(29000)}{65^2}$ △1 $= 68^{ksi}$ △1

$F_{cr} = \left[0.658^{50/68}\right]50 = 36.8^{ksi}$ △1

$P_n = A_g F_{cr} = 24.6\ in^2(36.8^{ksi}) = 905^k$ △1

$P_n/\Omega = 905^k/1.67 = 542^k > 273^k$ ∴ by inspection combined Axial and bending OK

William J. Frank Engineering, P.C.
Construction, GeoStructural, Structural
& Value Engineering
4 Old Route 6, Brewster, NY 10509
www.WilliamJFrankEngineering.com

DESIGN SHEAR CONNECTION BETWEEN WALES

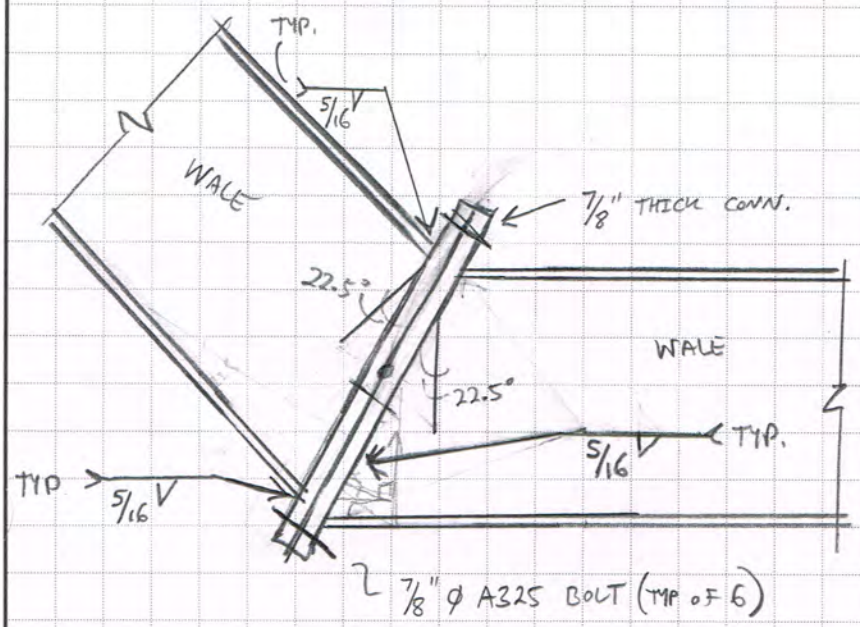

Shear on connection = $49^k / \cos 22.5°$

$= 53^k$

try (6) 7/8" Ø A325 BOLTS $A_b = 0.60\ in^2$

$R_n = F_n A_b = (54^{ksi})(0.60\ in^2) = 32.4^k$

$R_n/\Omega = 32.4^k/2.0 = 16.2^k$ $\quad \frac{R_n}{\Omega}\text{group} = 16.2^k \times 6 = 97.2^k > 53^k \therefore$ OK

Check bearing -

$R_n = 1.5 l_c t F_u < 3.0 d t F_u$

William J. Frank Engineering, P.C.
Construction, GeoStructural, Structural
& Value Engineering
4 Old Route 6, Brewster, NY 10509
www.WilliamJFrankEngineering.com

$R_n = 1.5(1.06'')(7/8)(58^{ksi}) < 3.0(7/8)(7/8)(58^{ksi})$

$= 80.7^k < 133^k$

$R_n = 80.7^k$

$R_n/\Omega = 80.7^k/2 = 40.4^k$

R_n/Ω group $= 40.4^k \times 6 = 242^k > 53^k \therefore$ ok

Check weld -

$R_n = 0.6 F_{exx} A_{weld}$ $\quad A_{weld} = [(26.5) + (1 \times 10.5)] \times 0.707 \times 5/16 = 8.2 \text{ in}^2$

$= 0.6(70^{ksi})(8.2 \text{ in}^2)$

$= 344^k$

$R_n/\Omega = 344^k/2 = 172^k > 53^k \therefore$ ok

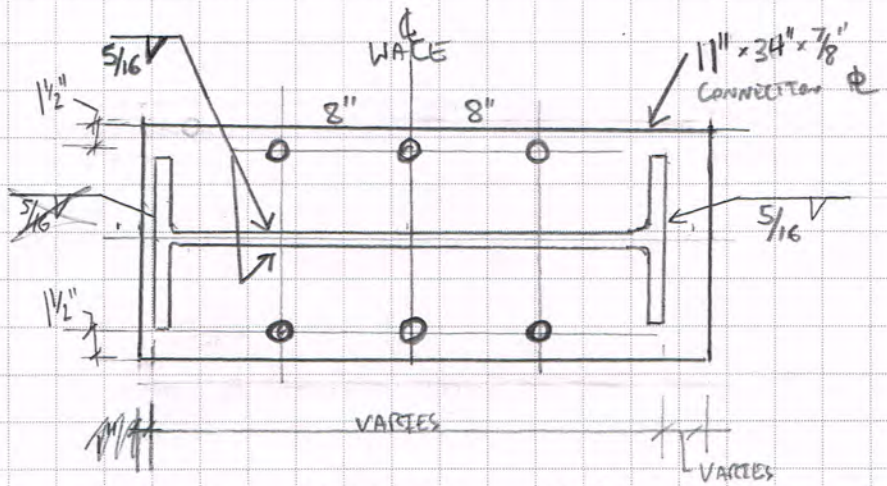

* In lieu of bolting connection plates together, use one PL and field weld both beams to single PL, or shop weld one beam and field weld to other.

William J. Frank Engineering, P.C.
Construction, GeoStructural, Structural
& Value Engineering
4 Old Route 6, Brewster, NY 10509
www.WilliamJFrankEngineering.com

CHECK CORNER CONNECTION

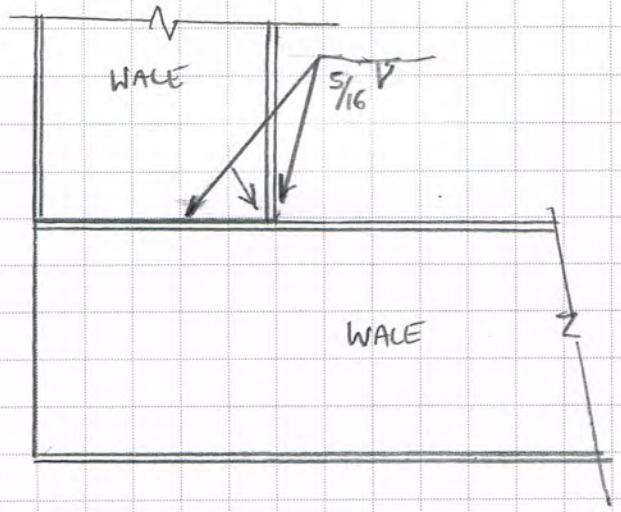

$V = 96^k$

$R_n = 0.6 F_{exx} A_{weld}$ $\quad A_{weld} = 0.707(5/16)(15.1 + 11.3 + 5) = 6.9 \text{ in}^2$ △1

$R_n = 0.6(70^{ksi})(6.9 \text{ in}^2) = 290^k$ △1

△1 $R_n/\Omega = 290^k/2.0 = 145^k \gg 96^k \therefore$ OK

△1 By inspection, with a 7% increase in brace force, connection are still OK

William J. Frank Engineering, P.C.
Construction, GeoStructural, Structural
& Value Engineering
4 Old Route 6, Brewster, NY 10509
www.WilliamJFrankEngineering.com

SUPPORT FOR INTERIM BRACE LEVEL

Lower brace level will hang from upper brace level using straps. Determine strap capacity and number required.

Total weight of bracing = 5 struts × 13' × 84 lbs/ft = 5460 lbs. △1
220' × 99 lbs/ft = 21780 lbs
27240 lbs = 27.2 k △1

Put straps at corners and around wale at strut connections

14 vertical straps, capacity/strap = 27k/14 = 1.93 k △1 provide 2 ton min. capacity.

WALE SEAT

Use HP12×84 wale seat

by inspection (ok) for bending and shear

Check weld -

V = 27k × 2 levels / 14 wale seats = 3.9 k △1 △1

M = 3.9k/2 × 3' = 5.9 k-ft = 70 k-in △1 t_{weld} = 0.707(1/4) = 0.18"

$I_{weld\ group}$ = (2 × 0.18")(9.5")³/12 + (0.18"(4")(9.5"/2)² × 4) = 90.7 in⁴

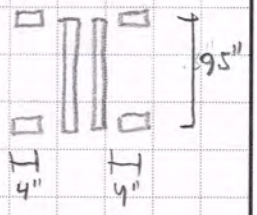

$f_{b\,weld}$ = Mc/I = 70 k-in (9.5/2)/90.7 = 3.7 ksi △1

$f_{v\,weld}$ = 3.9 k / 0.18((4×4)+(2×9.5)) = 0.62 ksi △1 f_{weld} = 3.7 ksi △1 F_n/Ω = 0.6(70)/2 = 21 ksi > 3.7 ksi △1 ∴ (ok)

William J. Frank Engineering, P.C.
Construction, GeoStructural, Structural
& Value Engineering
4 Old Route 6, Brewster, NY 10509
www.WilliamJFrankEngineering.com

CHECK WALES FOR CONCENTRATED LOADS

W30x99 $R = 255^k$ @ dist. from end > d

$R = 88^k$ @ dist from end < d

Based on analysis on following pages, stiffeners not required by code, however provide 5/8" thick web stiffeners at strut locations as a precaution.

1 With 7½ increase in brace force max $R = 273^k$, web crippling will not meet code. Check stiffened web for concentrated load.

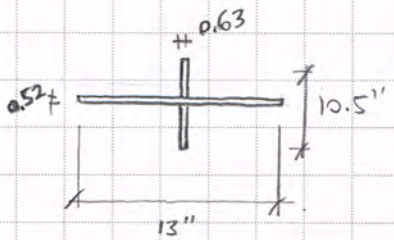

$A = 13.0 \text{ in}^2$

$I_x = 0.52(13)^3/12 = 95 \text{ in}^4$

$I_y = 0.63(10.5)^3/12 = 61 \text{ in}^4$

$r_y = \sqrt{I/A} = \sqrt{61/13} = 2.17''$

$Kl/r = 0.75(28.4'')/2.17 = 9.8 < 25$

$P_n = A_g F_y = 13.0 \text{ in}^2 (36^{ksi}) = 468^k$ $\quad P_n/\Omega = 468^k/1.67 = 280^k > 273^k$

∴ OK

AISC J10.2: Web Local Yielding **W30x99 Not at Ends**

Note: Tension and compression concentrated forces.

Fy =	50 ksi	Lb = Length of Bearing =	10 in
tw =	0.52 in	d =	29.7 in
k =	1.32 in	Le = Distance from Force to End of Member=	36 in

Rn = Fy x tw x (5k + Lb)

Rn = 431.60 kips

Rn/Ω = 287.73 kips **> 255 kips Therefore OK**

AISC J10.3: Web Local Crippling **W30x99 Not at Ends**

Note: Applies to compressive forces only.

Fy =	50 ksi	Lb = Length of Bearing =	10 in
tw =	0.52 in	Le = Distance from Force to End of Member =	36 in
tf =	0.67 in	d = Depth of Member =	29.7 in

for Le > d/2: APPLIES

$$R_n = 0.80t_w^2\left[1+3\left(\frac{N}{d}\right)\left(\frac{t_w}{t_f}\right)^{1.5}\right]\sqrt{\frac{EF_{yw}t_f}{t_w}}$$

for Le < d/2 and Lb/d < 0.2:

$$R_n = 0.40t_w^2\left[1+3\left(\frac{N}{d}\right)\left(\frac{t_w}{t_f}\right)^{1.5}\right]\sqrt{\frac{EF_{yw}t_f}{t_w}}$$

for Le < d/2 and Lb/d > 0.2:

$$R_n = 0.40t_w^2\left[1+\left(\frac{4N}{d}-0.2\right)\left(\frac{t_w}{t_f}\right)^{1.5}\right]\sqrt{\frac{EF_{yw}t_f}{t_w}}$$

Rn = 499.88 kips

Rn/Ω = 249.94 kips **≈ 255 kips Stiffeners not needed**

William J. Frank Engineering, P.C.
Construction, GeoStructural, Structural
& Value Engineering
4 Old Route 6, Brewster, NY 10509
www.WilliamJFrankEngineering.com

AISC J10.2: Web Local Yielding **W30x99 Ends**

Note: Tension and compression concentrated forces.

Fy =	50 ksi	Lb = Length of Bearing =	18 in
tw =	0.52 in	d =	29.7 in
k =	1.32 in	Le = Distance from Force to End of Member=	9 in

Rn = Fy x tw x (2.5k + Lb)

Rn = 553.80 kips

Rn/Ω = 369.20 kips **> 88 kips Therefore OK**

AISC J10.3: Web Local Crippling **W30x99 Ends**

Note: Applies to compressive forces only.

Fy =	50 ksi	Lb = Length of Bearing =	18 in
tw =	0.52 in	Le = Distance from Force to End of Member =	9 in
tf =	0.67 in	d = Depth of Member =	29.7 in

for Le > d/2:

$$R_n = 0.80t_w^2\left[1+3\left(\frac{N}{d}\right)\left(\frac{t_w}{t_f}\right)^{1.5}\right]\sqrt{\frac{EF_{yw}t_f}{t_w}}$$

for Le < d/2 and Lb/d < 0.2:

$$R_n = 0.40t_w^2\left[1+3\left(\frac{N}{d}\right)\left(\frac{t_w}{t_f}\right)^{1.5}\right]\sqrt{\frac{EF_{yw}t_f}{t_w}}$$

for Le < d/2 and Lb/d > 0.2: APPLIES

$$R_n = 0.40t_w^2\left[1+\left(\frac{4N}{d}-0.2\right)\left(\frac{t_w}{t_f}\right)^{1.5}\right]\sqrt{\frac{EF_{yw}t_f}{t_w}}$$

Rn = 372.67 kips

Rn/Ω = 186.34 kips **> 88 kips Stiffeners not needed**

William J. Frank Engineering, P.C.
Construction, GeoStructural, Structural
& Value Engineering
4 Old Route 6, Brewster, NY 10509
www.WilliamJFrankEngineering.com

CHECK GLOBAL STABILITY of THE COFFERDAM

Because cofferdam will be installed on a river bank which is on an approx. 2 horizontal : 1 vertical slope, consider unbalanced forces and potential for cofferdam to slide or overturn.

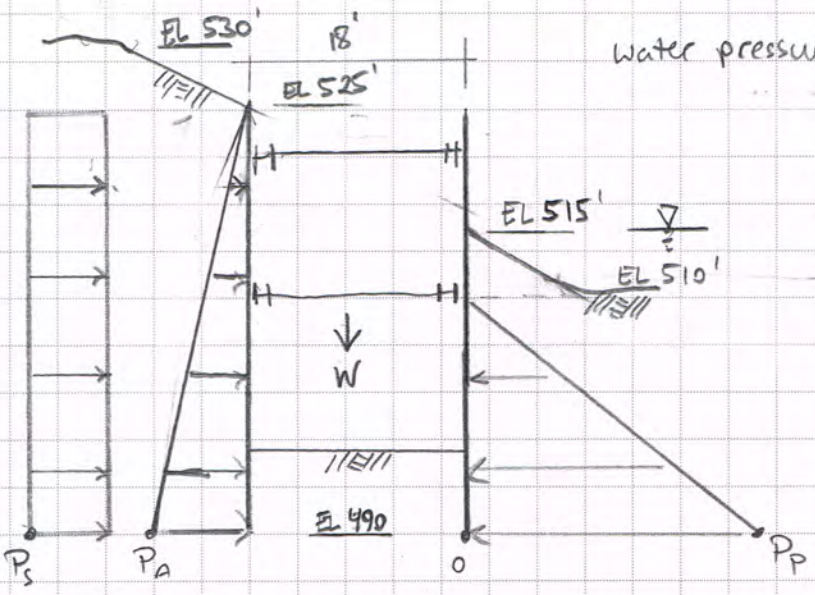

water pressure balance ∴ neglect

$$\gamma_{avg} = \frac{10'(120\ pcf) + 25'(73\ pcf)}{35'} = 86\ pcf = 0.086\ kcf$$

$P_S = 0.213\ ksf$

$P_A = 0.086\ kcf\,(35')(0.25) = 0.75\ ksf$

$P_P = 20'(0.073\ kcf)(4) = 5.8\ ksf$

$W_{soil} = 7' \times 0.073\ kcf \times 18' = 9.2\ k/ft$

W = weight of cofferdam = $26^k \times 2 = 52^k$ bracing
$+\ 73.9\ lbs/ft \times 35' \times 52$ panels $\times 2 = 269^k$
$321^k \longrightarrow 321/98' = 3^k/ft$

SLIDING – (per foot basis)

$\overrightarrow{\Sigma F} = 0.213\ ksf(35') + 0.75\ ksf(35')(1/2) = 20.6^k$

$\overleftarrow{\Sigma F} = 5.8\ ksf(20')(1/2) + \tan 35°(9.2+3) = \overset{63.8}{66.5^k}$ F.S. $= 66.5^k / 20.6^k = \overset{3.1}{3.2} > 1.5$ (ok)

OVERTURNING –

$\Sigma M_o = 0.213(35)(35/2) + 0.75(35)(1/2)(35/3) = 284\ k\text{-}ft$

$\Sigma M_o = 5.8(20)(1/2)(20/3) + (9.2+3)(9) = 496\ k\text{-}ft$ F.S. $= 496\ k\text{-}ft / 284\ k\text{-}ft = 1.75 > 1.5$ (ok)

William J. Frank Engineering, P.C.
Construction, GeoStructural, Structural
& Value Engineering
4 Old Route 6, Brewster, NY 10509
www.WilliamJFrankEngineering.com

CHECK COFFERDAM UNDER LOW WATER

Assume LW EL 518' (Sheet 123 of contract drawings)

Consider excavation stages 1 & 2 with water elevation @ EL 518'

by inspection stage 1 will not control for brace force, embedment, or Sheeting size.

re-run Stage 2 analysis : $\gamma_{avg} = \frac{7(0.120) + 21(0.073)}{28} = 0.085$

$P_{A1} = 0.346\left(0.085/0.076\right) = 0.387$ ksf

$P_{A2} = 0.532\left(0.085/0.076\right) = 0.595$ ksf

See Following CT-Shoring analysis $S_x = 14.8$ in³/ft < 48.4 in³/ft
Brace Force = 13.8 k/ft > 12.0 k/ft

By inspection increasing brace force by 15%, (13.8/12 = 1.15) wales and struts still (OK) connections still (OK). connections wales and struts are all oversized by more than 15%.

River Road Cofferdam

BY DJF 12-8-14
CHK WJF 12/9/14

39/40

Stage 2

Low Water Elevation

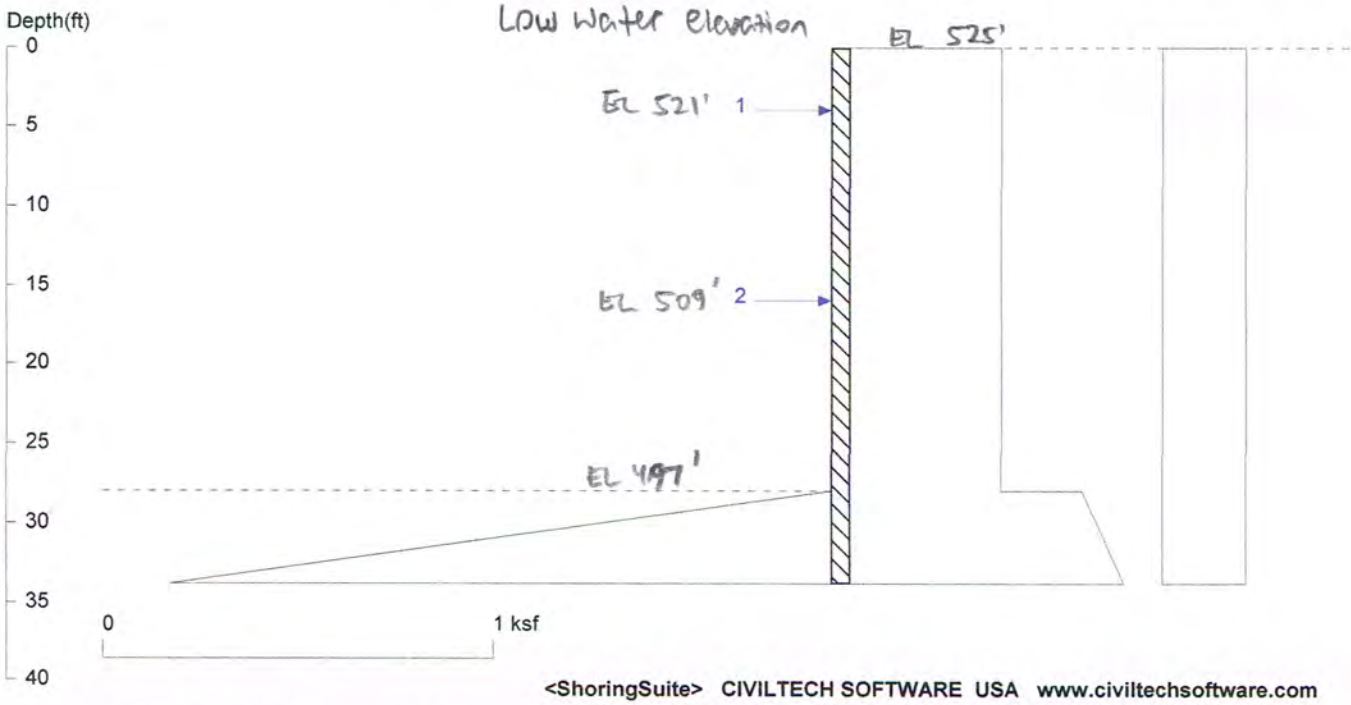

<ShoringSuite> CIVILTECH SOFTWARE USA www.civiltechsoftware.com

Licensed to 4324324234 3424343 Date: 12/8/2014

File: P:\Project Files\2014\14-049 Rutland VT Bridges (Kubricky)\14-049.01 Rutland VT Bridges\Calculations\River Road S

Wall Height=28.0 Pile Diameter=1.0 Pile Spacing=1.0 Wall Type: 1. Sheet Pile

PILE LENGTH: Min. Embedment=5.80 (8~10ft is recommended!!!) Min. Pile Length=33.80 (in graphics and analysis)
User inputted Embedment=5.80, Pile Length=33.80
MOMENT IN PILE: Max. Moment=40.80 per Pile Spacing=1.0 at Depth=15.99

PILE SELECTION:
Request Min. Section Modulus = 14.8 in3/ft=797.61 cm3/m, Fy= 50 ksi = 345 MPa, Fb/Fy=0.66
-> Piles meet Min. Section Requirements: Top Deflection is shown in (in)
CZ95RD (0.00) CZ95 (0.00) Z75 (0.00) CZ16 (0.00) BZ8.6 (0.00)
SZ18 (0.00) CZ101 (0.00) SPZ19-5 (0.00) SZ250 (0.00) Z80 (0.00)
CZ17 (0.00) CZ107 (0.00) SZ20 (0.00) CZ18 (0.00)

BRACE FORCE: Strut, Tieback, Plate Anchor, and Deadman

No. & Type	Depth	Angle	Space	Total F.	Horiz. F.	Vert. F.	N/A	N/A
1. Strut	4.0	0.0	1.0	3.1	3.1	0.0	0.0	0.0
2. Strut	16.0	0.0	1.0	13.8	13.8	0.0	0.0	0.0

UNITS: Width,Diameter,Spacing,Length,Depth,and Height - ft; Force - kip; Bond Strength and Pressure - ksf

DRIVING PRESSURES (ACTIVE, WATER, & SURCHARGE):

Z1	P1	Z2	P2	Slope
0	.387	28	.387	0.000000
28	.595	50	0.998	.0183
0	.213	50	0.213	0

PASSIVE PRESSURES:

Z1	P1	Z2	P2	Slope
28	0	50	6.424	.292

ACTIVE SPACING:

No.	Z depth	Spacing
1	0.00	1.00
2	28.00	1.00

PASSIVE SPACING:

BY DLF 12-8-14
Chk WJF 12/9/14

40/40

No.	Z depth	Spacing
1	0.00	1.00

UNITS: Width,Spacing,Diameter,Length,and Depth - ft; Force - kip; Moment - kip-ft
Friction,Bearing,and Pressure - ksf; Pres. Slope - kip/ft3; Deflection - in

APPENDIX 'A'

Catalog Cut for Sheet Piles

A1/2

Z Pile Profile

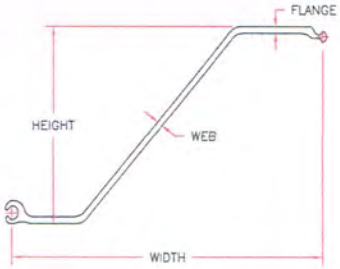

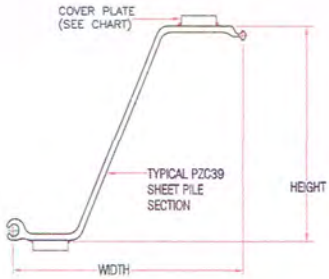

Cover Plated Z Profiles

Section	Width+	Height+	Web Thick-ness+	Flange Thick-ness+	Weight		Moment of Inertia		Section Modulus		Nominal Coating Area*
	in.	in.	in.	in.	lb / lft	lb / ft²	in⁴	in⁴ / wft	in³	in³ / wft	ft² / lft
	mm	mm	mm	mm	kg / lm	kg / m²	cm⁴	cm⁴ / wm	cm³	cm³ / wm	m² / lm
PZC 13	**27.88**	**12.56**	**0.375**	**0.375**	**50.4**	**21.7**	**353.0**	**152.0**	**56.2**	**24.2**	**5.60**
	708	**319**	**9.5**	**9.5**	**75.1**	**106.0**	**14,690**	**20,760**	**920**	**1,300**	**1.71**
PZC 14	27.88	12.60	0.420	0.420	55.0	23.7	381.6	164.3	60.5	26.0	5.60
	708	320	10.7	10.7	81.8	115.5	15,890	22,440	990	1,400	1.71
PZC 18	**25.00**	**15.25**	**0.375**	**0.375**	**50.4**	**24.2**	**532.2**	**255.5**	**69.8**	**33.5**	**5.60**
	635	**387**	**9.5**	**9.5**	**75.1**	**118.2**	**22,150**	**34,890**	**1,145**	**1,800**	**1.71**
PZC 19	25.00	15.30	0.420	0.420	55.0	26.4	576.3	276.6	75.3	36.1	5.60
	635	388	10.7	10.7	81.8	128.8	23,990	37,780	1,235	1,945	1.71
PZC 25	27.88	17.66	0.485	0.560	69.4	29.9	938.7	404.1	106.3	45.7	6.15
	708	449	12.3	14.2	103.3	145.9	39,070	55,190	1,740	2,455	1.87
PZC 26	**27.88**	**17.70**	**0.525**	**0.600**	**73.9**	**31.8**	**994.3**	**428.1**	**112.4**	**48.4**	**6.15**
	708	**450**	**13.3**	**15.2**	**110.0**	**155.4**	**41,390**	**58,460**	**1,840**	**2,600**	**1.87**
PZC 28	27.88	17.75	0.570	0.645	79.0	34.0	1,057	455.1	119.1	51.3	6.15
	708	451	14.5	16.4	117.6	166.1	44,000	62,150	1,950	2,755	1.87
Sections in development — inquire for availability.											
PZC 37	22.50	21.02	0.488	0.563	69.6	37.1	1,349	719.6	128.4	68.5	6.15
	572	534	12.4	14.3	103.6	181.2	56,160	98,270	2,100	3,680	1.87
PZC 39	**22.50**	**21.05**	**0.525**	**0.600**	**74.0**	**39.5**	**1,429**	**762.1**	**135.6**	**72.3**	**6.15**
	572	**535**	**13.3**	**15.2**	**110.2**	**192.8**	**59,480**	**104,100**	**2,220**	**3,890**	**1.87**
PZC 41	22.50	21.09	0.561	0.636	78.4	41.8	1,507	803.6	142.7	76.1	6.15
	572	536	14.2	16.2	116.6	204.1	62,720	109,700	2,340	4,090	1.87

Available Grades: ASTM A572 Gr. 50 and 60, A588 and A690
+Values stated are nominal
*Both sides of sheet: excludes socket interior and ball interlock

PZC™ is a trademark of Gerdau

Section	Normal Width	Plate Size	Per Single Section: Area	Per Single Section: Weight	Per Single Section: Total Surface Area	Per Single Section: Nominal Coating Area*	Per Unit of Wall: Weight: Full Length Plates	Per Unit of Wall: Weight: Half Length Plates	Per Unit of Wall: Moment of Inertia	Per Unit of Wall: Section Modulus
	in.	in.	in²	lb / ft	ft² / lin ft	ft² / lin ft	lb / ft²	lb / ft²	in⁴ / ft	in³ / ft
	mm	mm	mm²	kg / m	m² / m	m² / m	kg / m²	kg / m²	cm⁴ / m	cm³ / m
PZC 38-CP	**27.88**	**3.5 x 1.00**	**28.72**	**97.7**	**6.98**	**5.48**	**42.1**	**36.9**	**691.4**	**70.2**
(PZC26)	708		185.3	145.3	2.13	1.67	205.6	180.2	94,420	3,770
PZC 39-CP	**27.88**	**3.5 x 1.125**	**29.60**	**100.6**	**7.03**	**6.53**	**43.3**	**37.6**	**728.3**	**73.0**
(PZC26)	708		191.0	149.7	2.14	1.99	211.4	183.6	99,460	3,930
PZC 41-CP	**27.88**	**3.5 x 1.25**	**30.47**	**103.6**	**7.07**	**6.57**	**44.6**	**38.2**	**766.1**	**75.8**
(PZC26)	708		196.6	154.2	2.15	2.00	217.8	186.5	104,600	4,080

*Excludes socket interior and ball interlock
• Filet weld should be sized to adequately resist design loads and should be continuous and all around.
• Cover plate length depends upon moment curve. Best economy is obtained when plate length is limited to area of high moment.

Available Grades: ASTM A572 Gr. 50

A2/2

Z-Profile Interlock

All Gerdau Z-pile sections can be interlocked with each other. As such, the ball and socket interlocks can be installed with using either the standard or reverse position. This adds to greater ease of use and flexibility at the job site. Normal setting width of pairs can be altered to accommodate job site conditions through increasing or decreasing the laying width at the interlocks.

*Z-pile: Gerdau does not publish a swing value for Z-sections. As a "rule of thumb" it might be assumed that a 40 foot length would obtain a swing of up to 5 degrees.

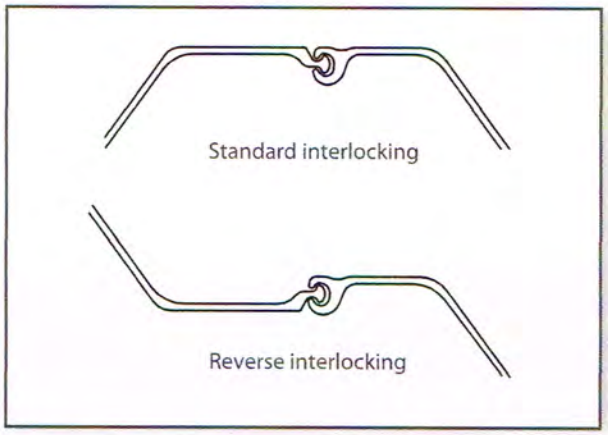

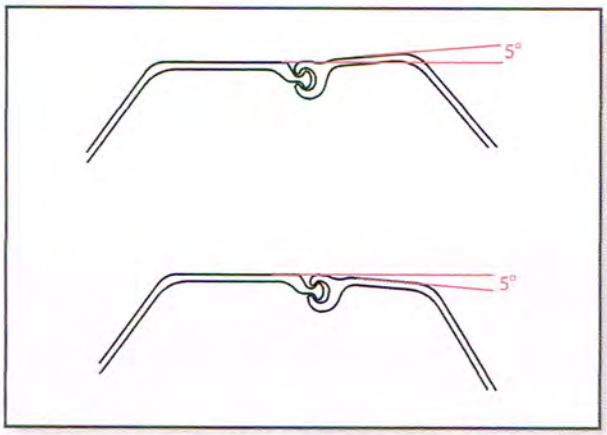

*From Gerdau's Sheet Piling Handbook 2006

Extruded Z-Profile Connectors

PZ 90

Cobra

PZ Tee

PZT-S

Colt

Note: all interlocks can be placed in reverse position with extruded connectors.

Joker

Bullhead

L.B. Foster can also provide special fabricated corners and tees when the job requires them.

LBFoster
Piling

(800) 848-6249
www.lbfoster.com