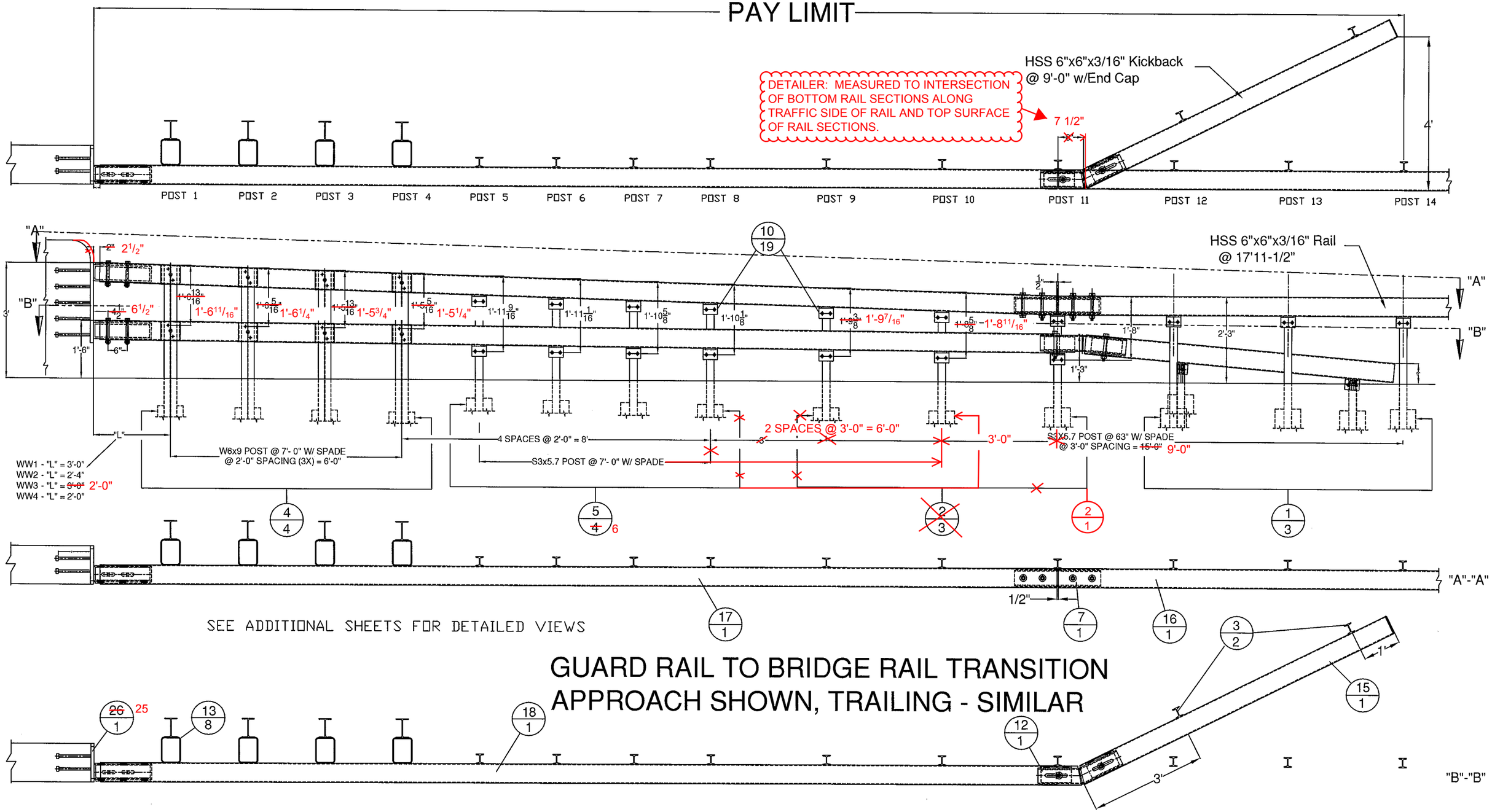


ITEM #: 900.620

SHEET 1 OF 7

STRUCTURAL STEEL TO COMPLY W/ ASTM A6

TOLERANCE UNLESS OTHERWISE NOTED:
FRACTIONS = ± 1/16"
ANGLES = ± 1/2°
DIAMETERS = ± 1/32"

Vermont Agency of Transportation
RECEIVED
CK'D BY GFR OK'D BY
Jan. 13, 2015
RESUBMIT X
BY C. Carlson DATE 05-12-2015

# SPECIAL PROVISION, GRAS – CONCRETE COMBINATION BR.

EM14-184, PROJECT: RUTLAND CITY, BRF 3000(16)
TOWN OF RUTLAND, RUTLAND COUNTY, VT

| REV | NO. | DATE | DESCRIPTION | BY | REV | NO. | DATE | DESCRIPTION | BY |
|---|---|---|---|---|---|---|---|---|---|
| | | | | | | | | | |

ELDERLEE, INC.
OAKS CORNERS, NEW YORK 14518
E-Mail: dlong@elderlee.com / epeek@elderlee.com
Tel: 315-789-6670 Fax: 315-789-6615

AISC CERTIFIED FABRICATOR

| | | |
|---|---|---|
| DRAWN | E.P. | 12/17/14 |
| CHECKED | D.L. | . |
| APPROVED | M.V. | . |
| SCALE | SCHEMATIC | |
| DRAWING NO. | FR L - RUTLAND-T | |

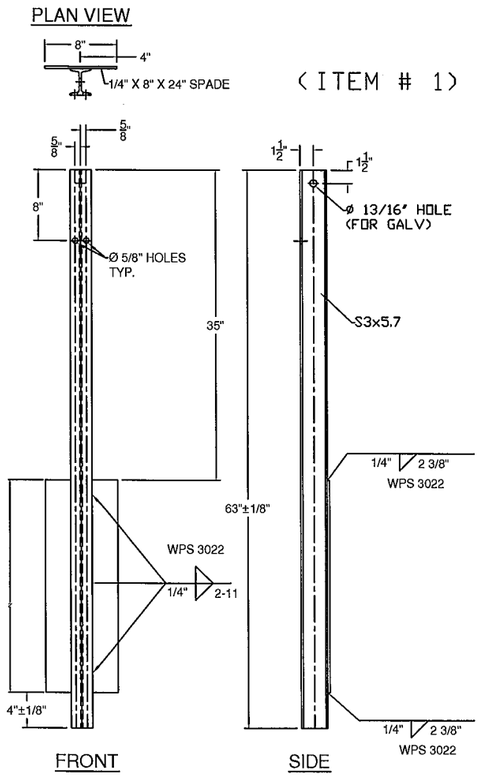


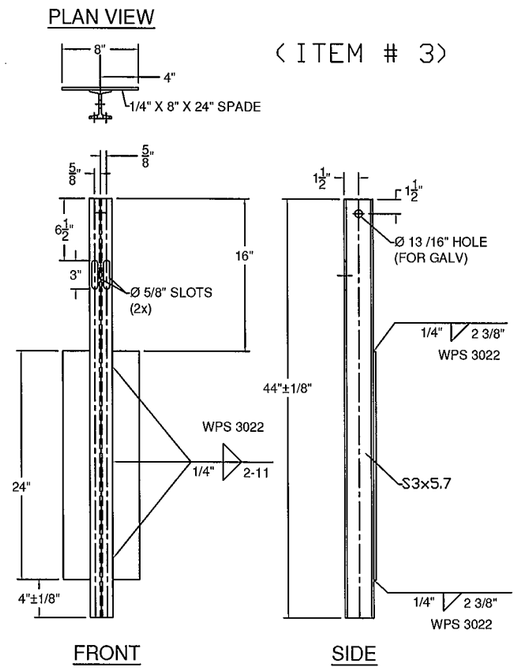


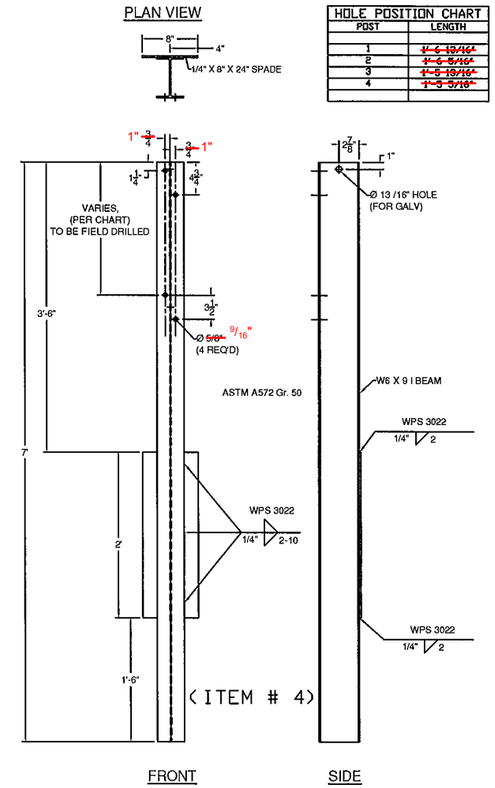


| HOLE POSITION CHART | |
|---|---|
| POST | LENGTH |
| 1 | ~~1'-6 13/16"~~ 1'-6 11/16" |
| 2 | ~~1'-6 5/16"~~ 1'-6 1/4" |
| 3 | ~~1'-5 13/16"~~ 1'-5 3/4" |
| 4 | ~~1'-5 5/16"~~ 1'-5 1/4" |

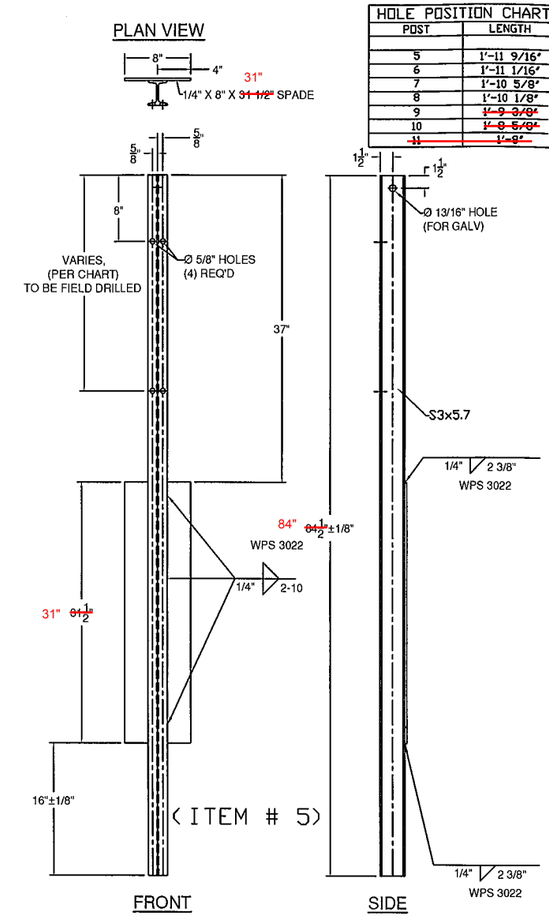


| HOLE POSITION CHART | |
|---|---|
| POST | LENGTH |
| 5 | 1'-11 9/16" |
| 6 | 1'-11 1/16" |
| 7 | 1'-10 5/8" |
| 8 | 1'-10 1/8" |
| 9 | ~~1'-9 3/8"~~ 1'-9 7/16" |
| 10 | ~~1'-8 5/8"~~ 1'-9 11/16" |
| ~~11~~ | ~~1'-8"~~ |

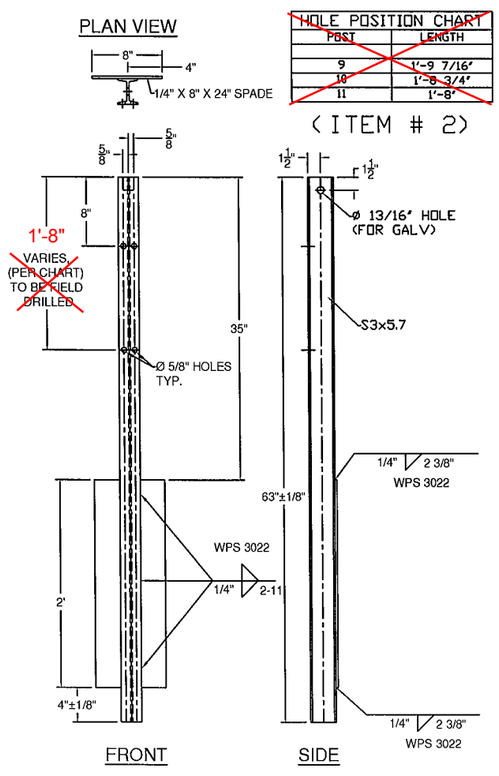


| HOLE POSITION CHART | |
|---|---|
| POST | LENGTH |
| ~~9~~ | ~~1'-9 7/16"~~ |
| ~~10~~ | ~~1'-8 3/4"~~ |
| ~~11~~ | ~~1'-8"~~ |

16C 1 6X6" BB @ 17'-11 1/2", DRILL 3' CC (W/ 50' RAD. FOR WW 1)
16D 1 6X6" BB @ 17'-11 1/2", DRILL 3' CC (BENT FOR WW 3)

BENT

BILL OF MATERIALS, EACH CORNER

| ITEM # | QTY. | COMPONENT # | DESCRIPTION | | MATERIAL (ASTM) |
|---|---|---|---|---|---|
| 1 | 3 | 0013.57021 | 3" I-POST, PUNCH 8' W/SPD @ 63" LG | | ASTM A572 Gr. 50 |
| 2 | ~~3~~ 1 | 0013.57025 | 3" I-POST W/SPD @ 63", PUNCH 8', & 20' ~~& HOLES @ VARIOUS~~ | | ASTM A572 Gr. 50 |
| 3 | 2 | 0013.57060 | 3" I-END POST W/SPD @ 3'-8" LG | | ASTM A572 Gr. 50 |
| 4 | 4 | – | W6X9 POST @ 7' W/SPD & ~~5/8"~~ 9/16" LES @ VARIOUS | | ASTM A572 Gr. 50 |
| 5 | ~~4~~ 6 | – | 3" I-POST, PUNCH 8' & VARIOUS', W/8X~~32"~~ 31" ADE @ 7' | | ASTM A572 Gr. 50 |
| 7 | 1 | 0033.00640 | HSS 5X5 TUBE SPLICE @ 27" LG W/ 1/4" SHIMS | | A500 Gr. B / A572 Gr 50 |
| 10 | 19 | 0054.00050 | REG BB SHELF ANGLES @ 4-1/2" 26 3/4" | | ASTM A36 |
| 12 | 1 | 0054.00074 | HSS 5X5 DBL BEND TUBE SPL @ ~~27"~~ LG | | A500 Gr. B / A572 Gr 50 |
| 13 | 8 | 0054.00563 | 6X8" TRANS. TUBE B/□ @ 6" LG | | A500 Gr. B |
| 15 | 1 | 0054.09000 | 6X6" BB @ 9'-0" KICKBACK, W/ CAP | | A500 Gr. B / A36 |
| *16A | 1 | 0054.18000 | 6X6" BB @ 17'-11 1/2", DRILL 3' CC (STRAIGHT FOR ~~WW3 & 4~~) | WW 4 | A500 Gr. B |
| *16B | 1 | 0033.90398 | 6X6" BB @ 17'-11 1/2", DRILL 3' CC (W/ 31' RAD. FOR ~~WW1 &2~~) | WW 2 | A500 Gr. B |
| *17A | 1 | 0033.91325 | 6X6" BB TOP TRANS @ 24'-~~9 3/4"~~ 9 1/4" (STRAIGHT FOR WW3 & 4) | | A500 Gr. B |
| *17B | 1 | 0033.91329 | 6X6" BB TOP TRANS @ 25'-~~1 3/4"~~ 1 1/4" (W/31' RAD. FOR WW2) | | A500 Gr. B |
| *17C | 1 | 0033.91327 | 6X6" BB TOP TRANS @ 25'-~~9 3/4"~~ 9 1/4" (~~W/31' RAD. FOR~~ WW1) | COMPOUND RADIUS | A500 Gr. B |
| *18A | 1 | 0033.91326 | 6X6" BB BTM TRANS @ 25'-~~5 1/2"~~ 4 1/2" (STRAIGHT FOR WW3 & 4) | | A500 Gr. B |
| *18B | 1 | 0033.91330 | 6X6" BB BTM TRANS @ 25'-~~9 1/2"~~ 8 1/2" (W/31' RAD. FOR WW2) | | A500 Gr. B |
| *18C | 1 | 0033.91328 | 6X6" BB BTM TRANS @ 26'-~~5 1/2"~~ 4 1/2" (~~W/31' RAD. FOR WW2~~) | WW 1 COMPOUND RADIUS | Gr. B |
| 19 | 18 | 0080.03355 | 3/8" X 7 1/2" BOLT, NUT, & 2 FW | | A307, A563, F436 |
| 20 | 19 | 0080.04100 | 1/2" x 1-1/2" BOLT, NUT, & FW | | A307, A563, F436 |
| 21 | 24 | 0080.04120 | 1/2" x 1-1/2" BOLT, NUT, 2 FW & LW | | A307, A563, F436 |
| 23 | 10 | 0080.06340 | 3/4" X 7-1/2" BOLT, NUT, 2 FW | | A325, A563, F436 |
| 24 | 8 | 0080.06370 | 3/4" X 8" CARR BOLT, NUT, FW & LW | | A307, A563, F436 |
| 25 | 1 | 0033.90393 | PARAPET WALL CONNECTION (APPROACH) WW2 & 3 | | A500 Gr. B, A572 Gr. 50, A709 Gr. 36 |
| 25 | 1 | 0033.90394 | PARAPET WALL CONNECTION (TRAILING) WW1 & 4 | | A500 Gr. B, A572 Gr. 50, A709 Gr. 36 |
| 26 | 1 | 0033.90395 | W6x25 POST ON BASE @ 2'9 3/16" OA | | ASTM A572 Gr. 50 |
| 27 | 1 | 0033.90396 | SPECIAL 3/8" ANCHOR PLATE | | ASTM A36 |
| 28 | ~~1~~ 2 | 0033.90397 | 10" X 6" X 1/4" BLOCKOUT @ 6" | | ASTM A500 Gr. B |
| 29 | 4 | 0042.21012 | Ø1" STUDS 12" OA W/ 2 1/4" THREAD BOTH ENDS | | A449 |
| 30 | 8 | 0080.18901 | Ø1" HEAVY HEX NUT | | A563 |
| 31 | 4 | 0080.18905 | Ø1" HEX JAM NUT | | A325 |
| 32 | 4 | 0080.18911 | Ø1" FLAT WASHER | | F436 |
| 33 | 1 | 0033.00056 | 1/8" FABRIC PAD | | |

ITEMS 26-33 ARE FOR WW1 ONLY

HARDWARE NOTES

| ITEM # | FUNCTION |
|---|---|
| 19 | BOLT RAIL TO SHELF ANGLE (ITEM #10) |
| 20 | BOLT SHELF ANGLE (ITEM # 10) TO POST |
| 21 | BOLT BLOCK-OUTS (ITEM # 13) TO HEAVY POST (ITEM # 4) |
| 23 | SPLICE TUBING (ITEM #'S 7 & 12), & (4) PER PARAPET WALL CONNECTION |
| 24 | BOLT RAIL (ITEMS #'S 17, & 18 TO BLOCK-OUTS (ITEM # 13) |

Vermont Agency of Transportation
RECEIVED
CK'D BY GFR OK'D BY
Jan. 13, 2015
RESUBMIT X
BY C. Carlson DATE 05-12-2015

GENERAL NOTES:

1) ALL RAILING IS TO BE FABRICATED AND ERECTED ACCORDING TO SECTION 525 OF THE STANDARD SPECIFICATIONS.
2) BOLTS SHALL BE TORQUED SNUG TIGHT (APPROXIMATELY 100 FT-LB).
3) PROTRUSIONS CAUSED BY WELDING OR GALVANIZING ARE NOT PERMITTED ON THE ADJOINING SURFACES OF THE BOX BEAM RAILS, SPLICE TUBES AND FILL PLATES.
~~4) BOX BEAM TUBE AND STEEL POST MATERIALS, DIMENSION SIZES AND NOTES SHALL BE THE SAME AS THOSE OF THE BRIDGE RAIL, UNLESS OTHERWISE NOTED.~~
5) ANY BENDING OF RAIL SHALL BE DONE AT THE FABRICATION PLANT. RADII GREATER THAN 16' TO BE CURVED ON A TUBE BENDING MACHINE, RADII LESS THAN 16' TO BE "PIE CUT" AND WELDED. CURVED RAILING WILL HAVE AN 18" LENGTH ON EACH END STRAIGHT TO ACCOMADATE SPLICES.

ITEM #: 900.620

SHEET 2 OF 7

STRUCTURAL STEEL TO COMPLY W/ ASTM A6

TOLERANCE UNLESS OTHERWISE NOTED:
FRACTIONS = ± 1/16"
ANGLES = ± 1/2°
DIAMETERS = ± 1/32"

# SPECIAL PROVISION, GRAS - CONCRETE COMBINATION BR.

EM14-184, PROJECT: RUTLAND CITY, BRF 3000(16)
TOWN OF RUTLAND, RUTLAND COUNTY, VT

| REV | NO. | DATE | DESCRIPTION | BY | REV | NO. | DATE | DESCRIPTION | BY |
|---|---|---|---|---|---|---|---|---|---|
| | | | | | | | | | |

ELDERLEE, INC.
OAKS CORNERS, NEW YORK 14518
E-Mail: dlong@elderlee.com / epeek@elderlee.com
Tel: 315-789-6670 Fax: 315-789-6615

AISC CERTIFIED FABRICATOR

| | | |
|---|---|---|
| DRAWN | E.P. | 12/17/14 |
| CHECKED | D.L. | |
| APPROVED | M.V. | |
| SCALE | SCHEMATIC | |
| DRAWING NO. | FR L - RUTLAND-T | |

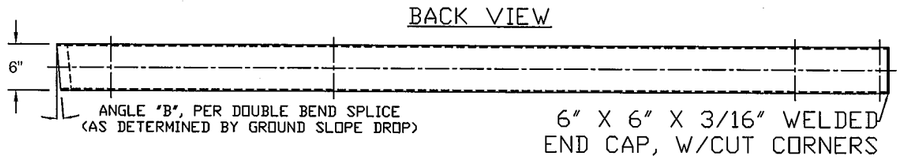


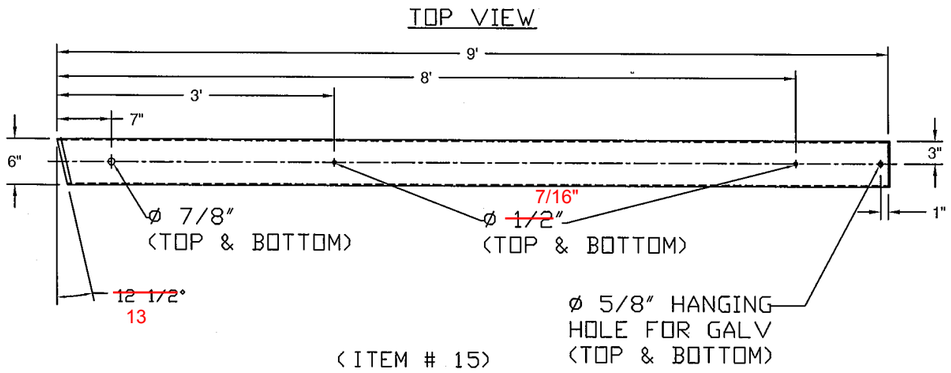


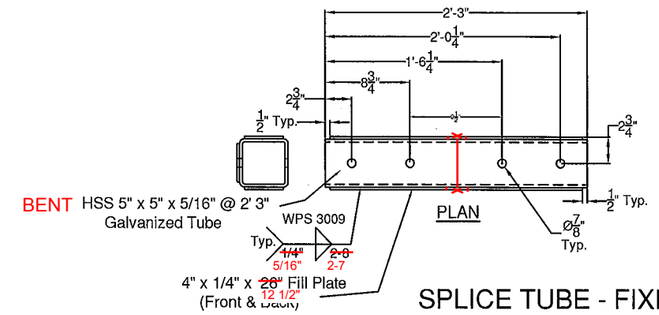


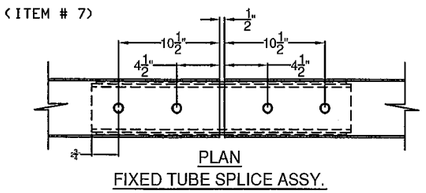


SPLICE TUBE - FIXED

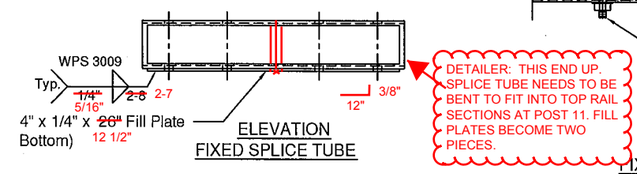


DETAILER: THIS END UP. SPLICE TUBE NEEDS TO BE BENT TO FIT INTO TOP RAIL SECTIONS AT POST 11. FILL PLATES BECOME TWO PIECES.

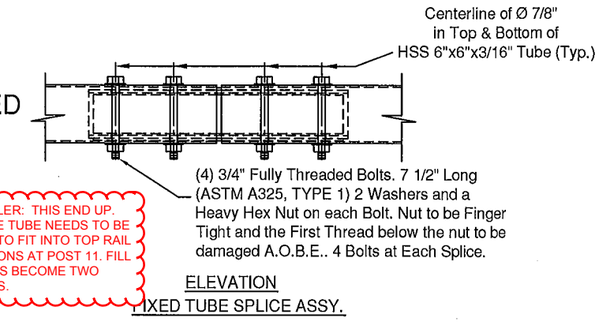


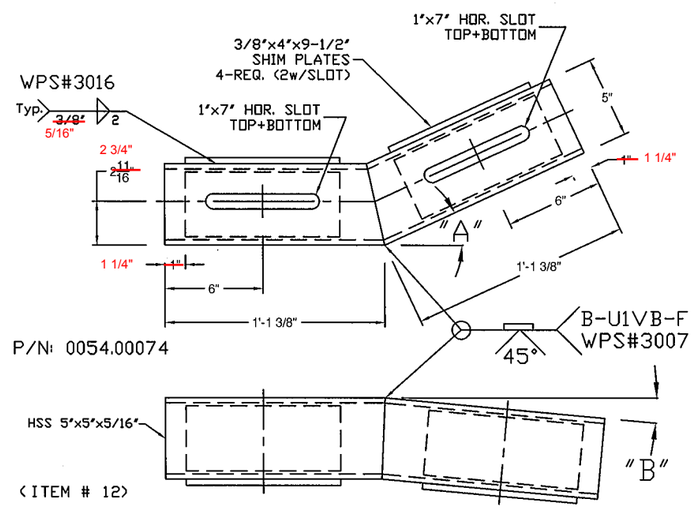


'A' - SEE PLAN FOR TURN BACK DISTANCE, SET ANGLE ACCORDINGLY.
'B' - TURN DOWN ANGLE SET BY THE 9" MEASURMENT AT THE END OF THE BOX BEAM.

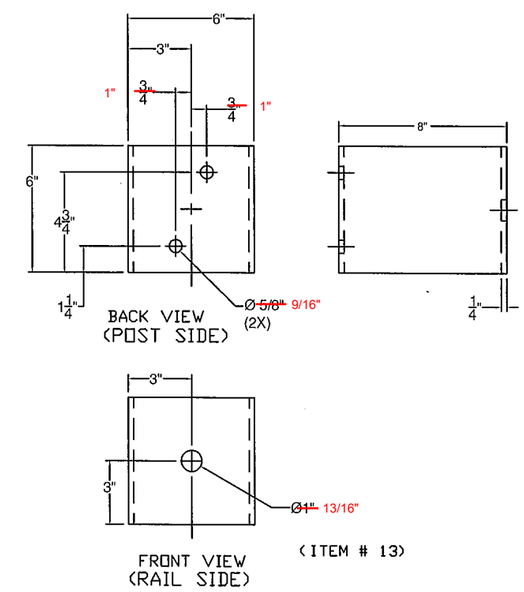


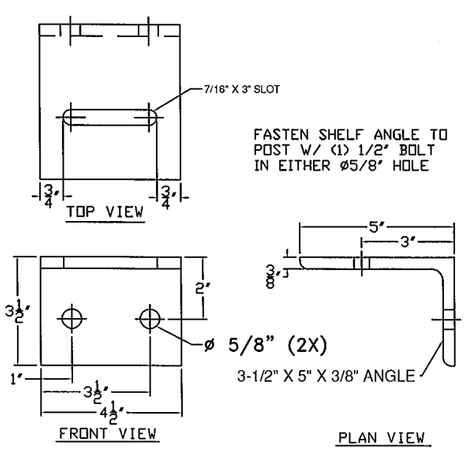


Vermont Agency of Transportation
RECEIVED
CK'D BY GFR OK'D BY
Jan. 13, 2015
RESUBMIT ×
BY C. Carlson DATE 05-12-2015

ITEM #: 900.620

SHEET 3 OF 7

STRUCTURAL STEEL TO COMPLY W/ ASTM A6

TOLERANCE UNLESS OTHERWISE NOTED:
FRACTIONS = ± 1/16"
ANGLES = ± 1/2°
DIAMETERS = ± 1/32"

# SPECIAL PROVISION, GRAS - CONCRETE COMBINATION BR.

EM14-184, PROJECT: RUTLAND CITY, BRF 3000(16)
TOWN OF RUTLAND, RUTLAND COUNTY, VT

| REV | NO. | DATE | DESCRIPTION | BY | REV | NO. | DATE | DESCRIPTION | BY |
|---|---|---|---|---|---|---|---|---|---|
| | | | | | | | | | |


ELDERLEE, INC.
OAKS CORNERS, NEW YORK 14518
E-Mail: dlong@elderlee.com / epeek@elderlee.com
Tel: 315-789-6670 Fax: 315-789-6615


CERTIFIED FABRICATOR

| | | |
|---|---|---|
| DRAWN | E.P. | 12/17/14 |
| CHECKED | D.L. | |
| APPROVED | M.V. | |
| SCALE | SCHEMATIC | |
| DRAWING NO. | FR L - RUTLAND-T | |

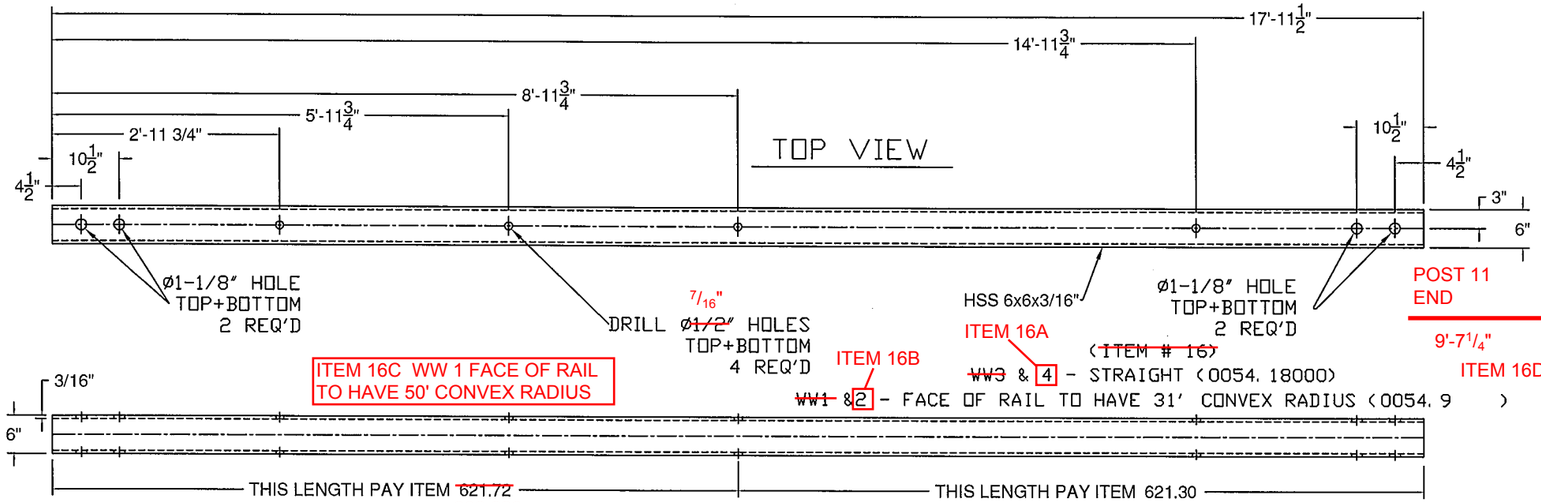


ITEM 16A

~~(ITEM # 16)~~

~~WW3~~ & 4 - STRAIGHT (0054. 18000)

ITEM 16B

~~WW1~~ &2 - FACE OF RAIL TO HAVE 31' CONVEX RADIUS (0054. 9 )

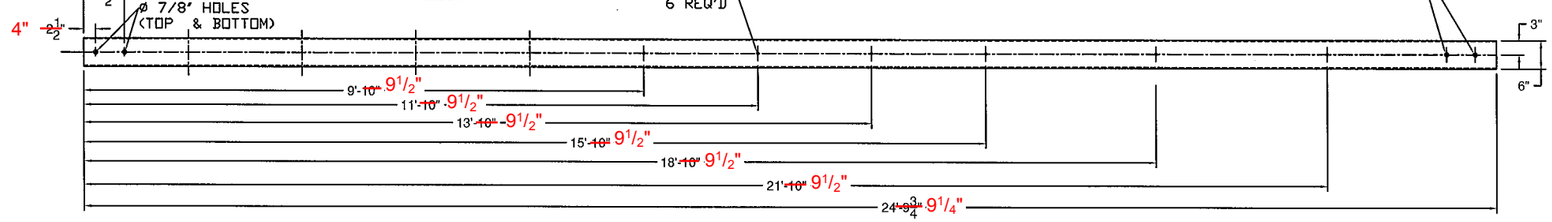


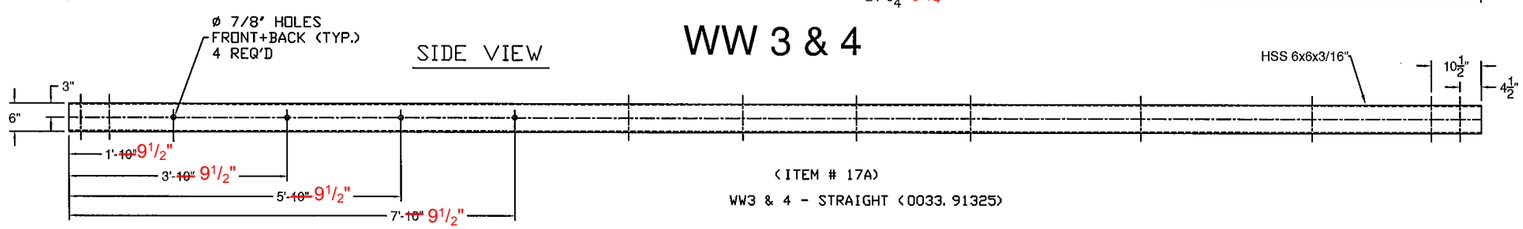


(ITEM # 17A)

WW3 & 4 - STRAIGHT (0033. 91325)

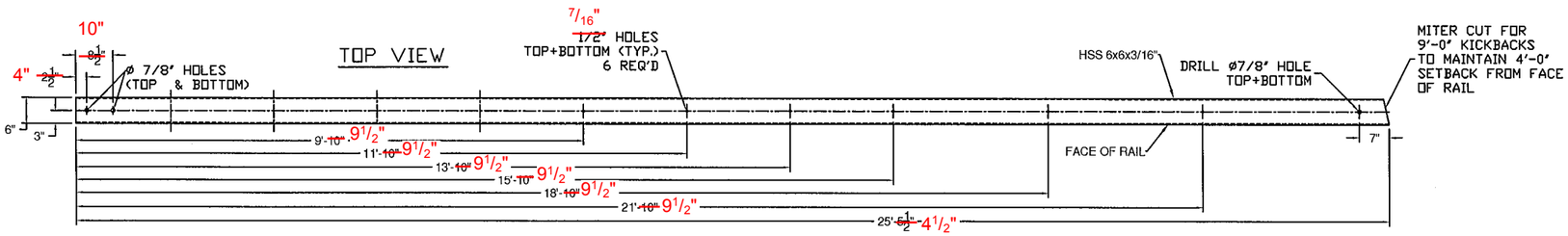


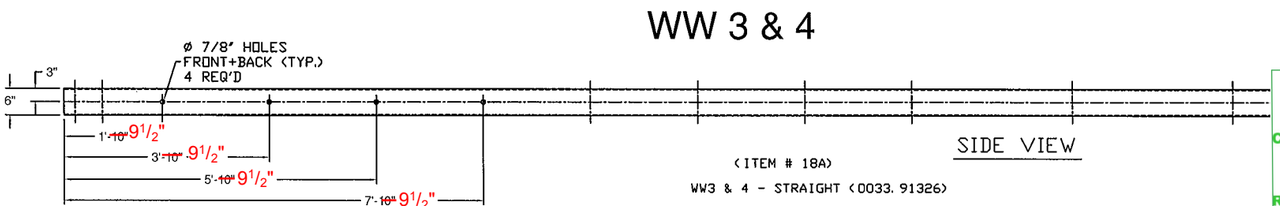


(ITEM # 18A)

WW3 & 4 - STRAIGHT (0033. 91326)

| BILL OF MATERIALS | | | |
|---|---|---|---|
| ITEM # | QTY | DESCRIPTION | ASTM # |
| 1 | 1 | DBL TUBE WALL PLATE - 1' X 12' x 25' | ASTM A572 Gr. 50 |
| 2 | 10 | Ø3/4' X 10' STUD | |
| 3 | 2 | 5' X 5' X 5/16' TUBE W/ SLOTS @ 18' | ASTM A500 Gr. B |
| 4 | 2 | SHIM PL 1/2' X 4' X 16' W/ SLOTS | ASTM A709 Gr. 36 |
| 5 | 2 | SHIM PL 1/2' X 4' X 16' (W/O SLOTS) | ASTM A709 Gr. 36 |

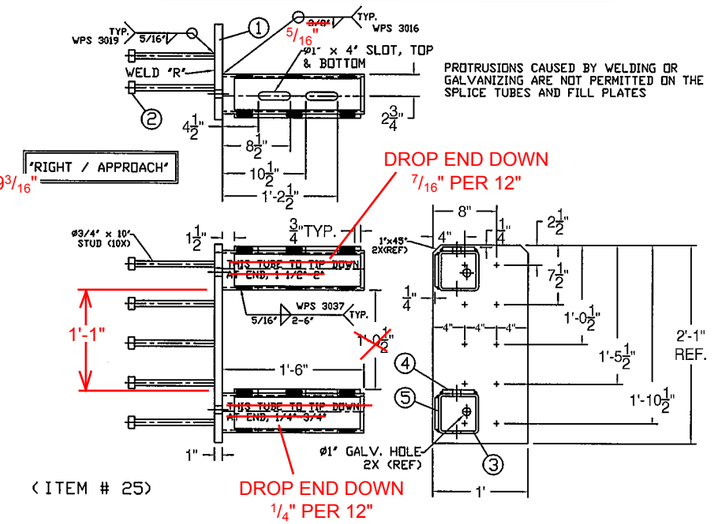


(ITEM # 25)

| BILL OF MATERIALS | | | |
|---|---|---|---|
| ITEM # | QTY | DESCRIPTION | ASTM # |
| 1 | 1 | DBL TUBE WALL PLATE - 1' X 12' x 25' | ASTM A572 Gr. 50 |
| 2 | 10 | Ø3/4' X 10' STUD | |
| 3 | 2 | 5' X 5' X 5/16' TUBE W/ SLOTS @ 18' | ASTM A500 Gr. B |
| 4 | 2 | SHIM PL 1/2' X 4' X 16' W/ SLOTS | ASTM A709 Gr. 36 |
| 5 | 2 | SHIM PL 1/2' X 4' X 16' (W/O SLOTS) | ASTM A709 Gr. 36 |

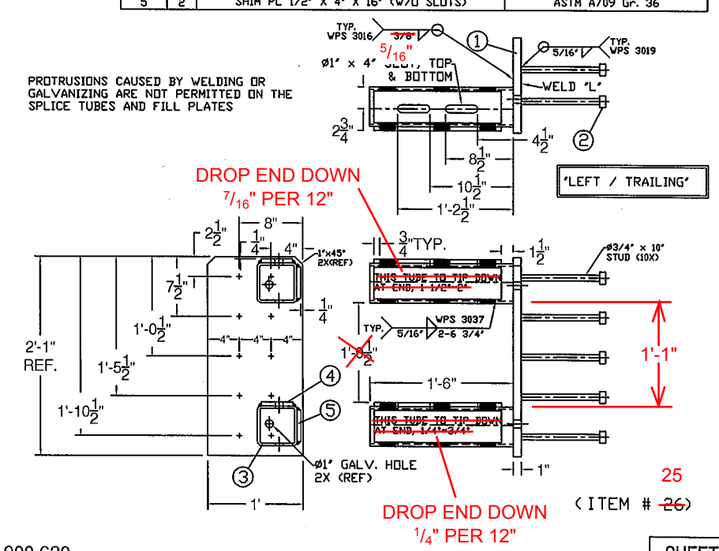


(ITEM # ~~26~~) 25

ITEM #: 900.620

SHEET 4 OF 7

STRUCTURAL STEEL TO COMPLY W/ ASTM A6

TOLERANCE UNLESS OTHERWISE NOTED:
FRACTIONS = ± 1/16"
ANGLES = ± 1/2°
DIAMETERS = ± 1/32"

Vermont Agency of Transportation
RECEIVED
CK'D BY GFR OK'D BY
Jan. 13, 2015
RESUBMIT X
BY C. Carlson DATE 05-12-2015

# SPECIAL PROVISION, GRAS - CONCRETE COMBINATION BR.

EM14-184, PROJECT: RUTLAND CITY, BRF 3000(16)
TOWN OF RUTLAND, RUTLAND COUNTY, VT

| REV | NO. | DATE | DESCRIPTION | BY | REV | NO. | DATE | DESCRIPTION | BY |
|---|---|---|---|---|---|---|---|---|---|
| | | | | | | | | | |


ELDERLEE, INC.
OAKS CORNERS, NEW YORK 14518
E-Mail: dlong@elderlee.com / epeek@elderlee.com
Tel: 315-789-6670 Fax: 315-789-6615


AISC CERTIFIED FABRICATOR

| | | |
|---|---|---|
| DRAWN | E.P. | 12/17/14 |
| CHECKED | D.L. | |
| APPROVED | M.V. | . |
| SCALE | SCHEMATIC | |
| DRAWING NO. | FR L - RUTLAND-T | |

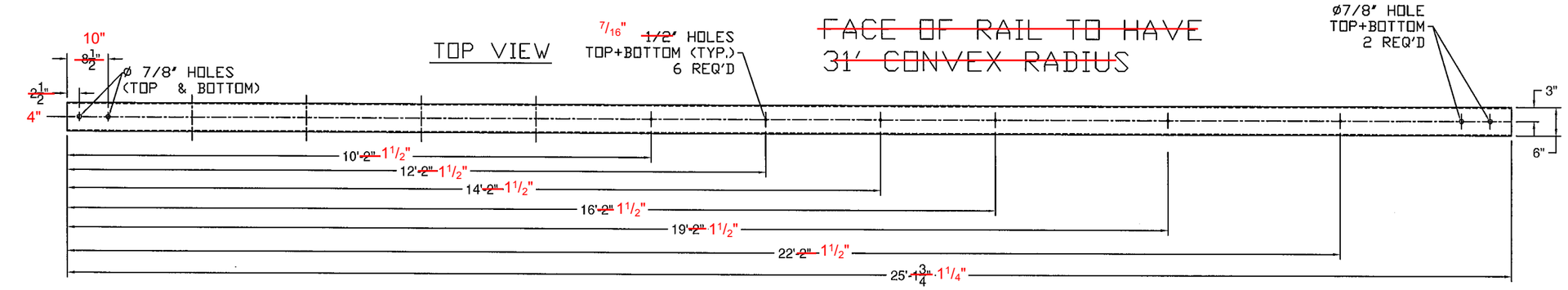


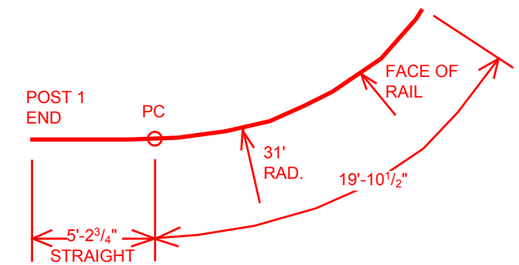


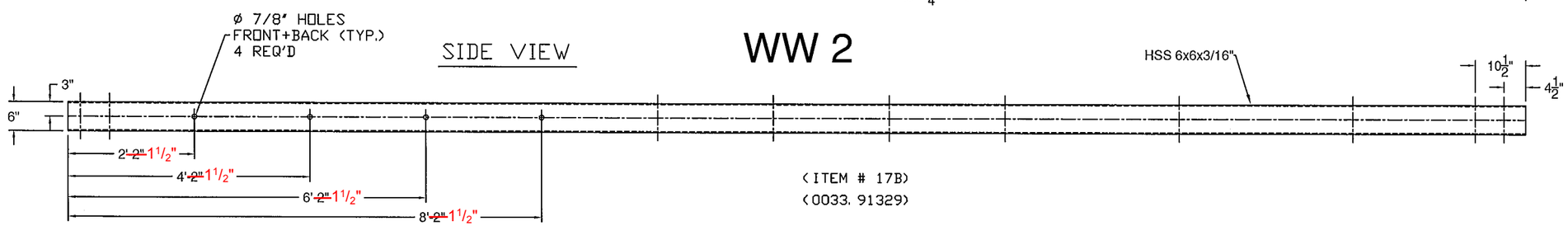


# WW 2

(ITEM # 17B)
(0033. 91329)

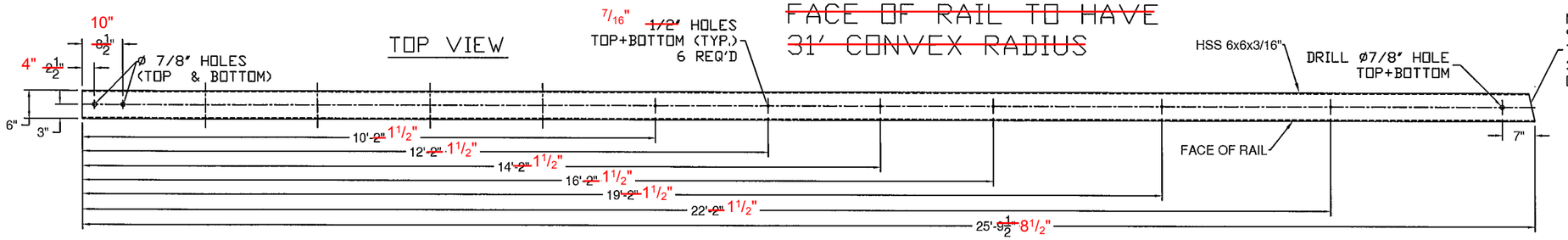


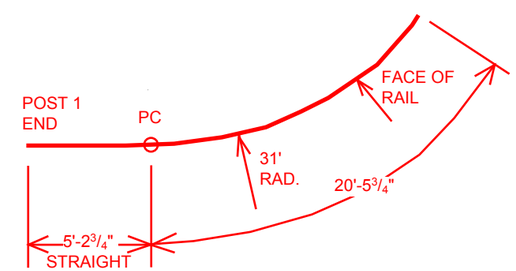


# WW 2

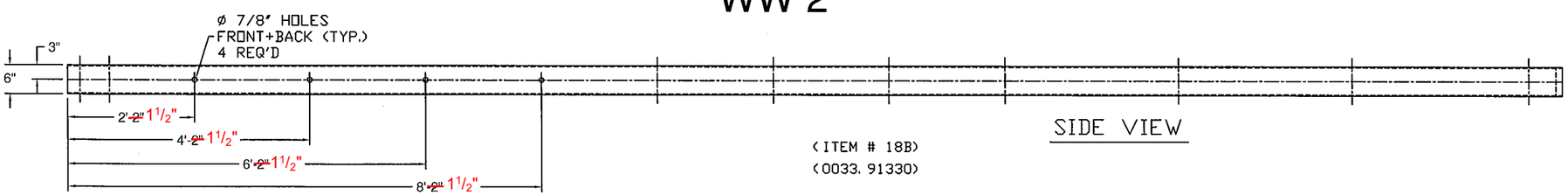


(ITEM # 18B)
(0033. 91330)

ITEM #: 900.620

SHEET 5 OF 7

STRUCTURAL STEEL TO COMPLY W/ ASTM A6

TOLERANCE UNLESS OTHERWISE NOTED:
FRACTIONS = ± 1/16"
ANGLES = ± 1/2°
DIAMETERS = ± 1/32"

## SPECIAL PROVISION, GRAS - CONCRETE COMBINATION BR.

EM14-184, PROJECT: RUTLAND CITY, BRF 3000(16)
TOWN OF RUTLAND, RUTLAND COUNTY, VT

| REV | NO. | DATE | DESCRIPTION | BY | REV | NO. | DATE | DESCRIPTION | BY |
|---|---|---|---|---|---|---|---|---|---|
| | | | | | | | | | |

ELDERLEE, INC.
OAKS CORNERS, NEW YORK 14518
E-Mail: dlong@elderlee.com / epeek@elderlee.com
Tel: 315-789-6670 Fax: 315-789-6615

AISC CERTIFIED FABRICATOR

| | | |
|---|---|---|
| DRAWN | E.P. | 12/17/14 |
| CHECKED | D.L. | |
| APPROVED | M.V. | . |
| SCALE | SCHEMATIC | |
| DRAWING NO. | FR L - RUTLAND-T | |

Vermont Agency of Transportation
RECEIVED
CK'D BY GFR OK'D BY
Jan. 13, 2015
RESUBMIT X
BY C. Carlson DATE 05-12-2015

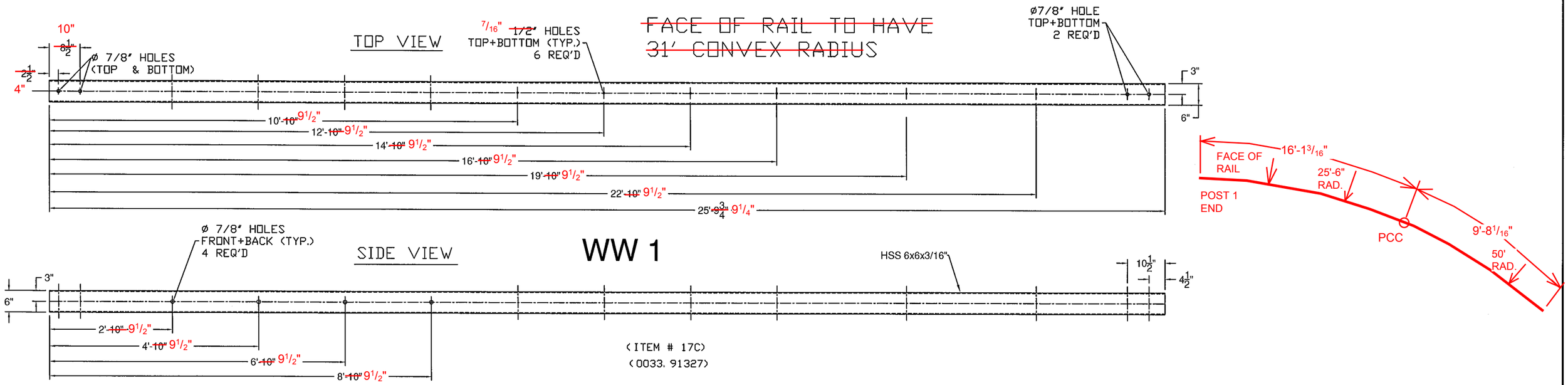


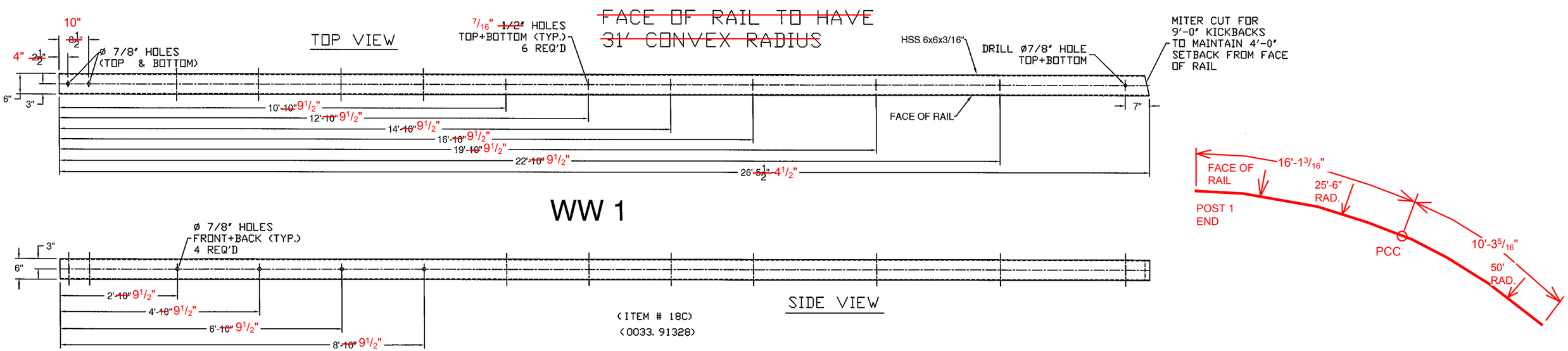


ITEM #: 900.620

SHEET 6 OF 7

STRUCTURAL STEEL TO COMPLY W/ ASTM A6

TOLERANCE UNLESS OTHERWISE NOTED:
FRACTIONS = ± 1/16"
ANGLES = ± 1/2°
DIAMETERS = ± 1/32"

Vermont Agency of Transportation
RECEIVED
CK'D BY GFR OK'D BY
Jan. 13, 2015
RESUBMIT ×
BY C. Carlson DATE 05-12-2015

# SPECIAL PROVISION, GRAS - CONCRETE COMBINATION BR.

EM14-184, PROJECT: RUTLAND CITY, BRF 3000(16)
TOWN OF RUTLAND, RUTLAND COUNTY, VT

| REV | NO. | DATE | DESCRIPTION | BY | REV | NO. | DATE | DESCRIPTION | BY |
|---|---|---|---|---|---|---|---|---|---|
| | | | | | | | | | |

ELDERLEE, INC.
OAKS CORNERS, NEW YORK 14518
E-Mail: dlong@elderlee.com / epeek@elderlee.com
Tel: 315-789-6670 Fax: 315-789-6615

AISC CERTIFIED FABRICATOR

| | | |
|---|---|---|
| DRAWN | E.P. | 12/17/14 |
| CHECKED | D.L. | |
| APPROVED | M.V. | . |
| SCALE | SCHEMATIC | |
| DRAWING NO. | FR L - RUTLAND-T | |

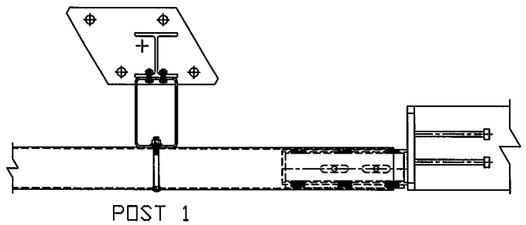


## WW1 DETAIL

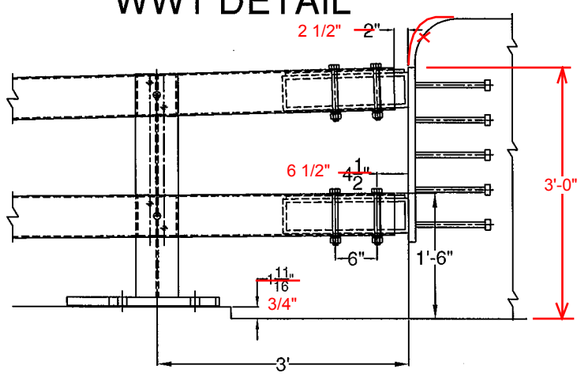


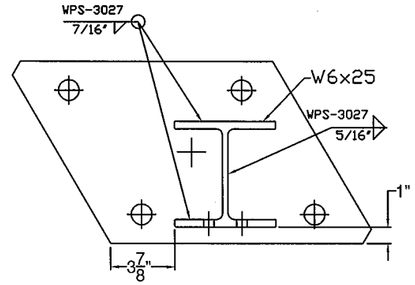


## POST LOCATION / WELDMENT DETAIL

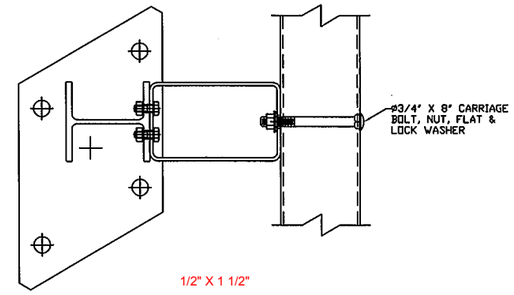


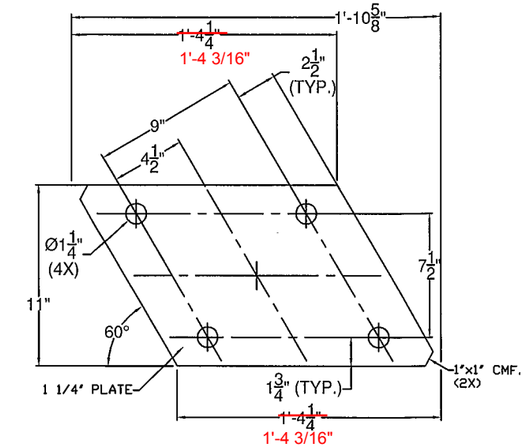


## BASE PLATE DETAIL & 1/8" PAD DETAIL

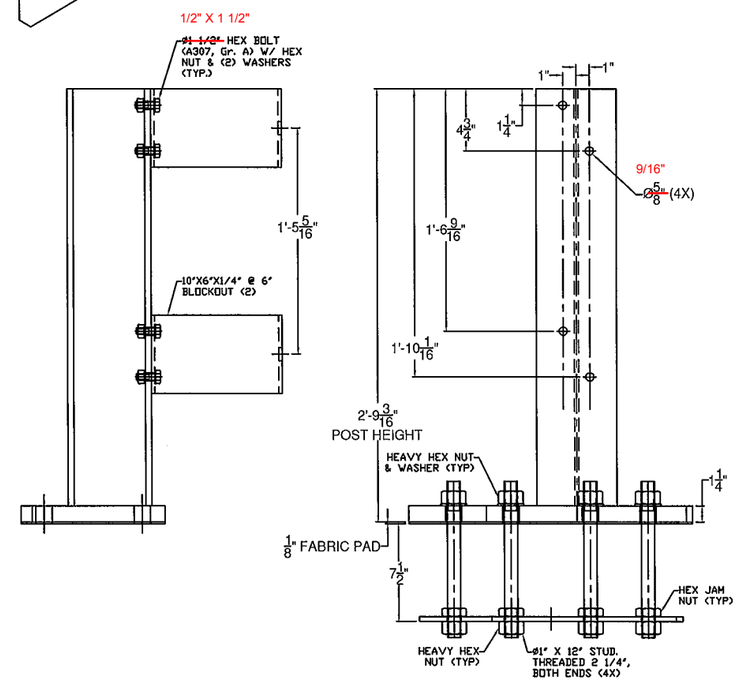


## POST & ANCHORAGE DETAIL

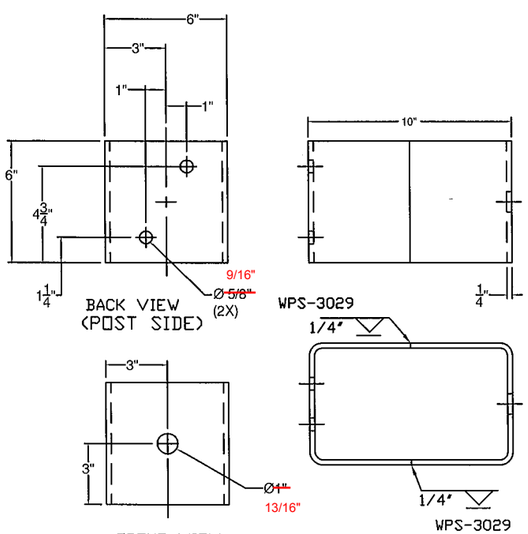


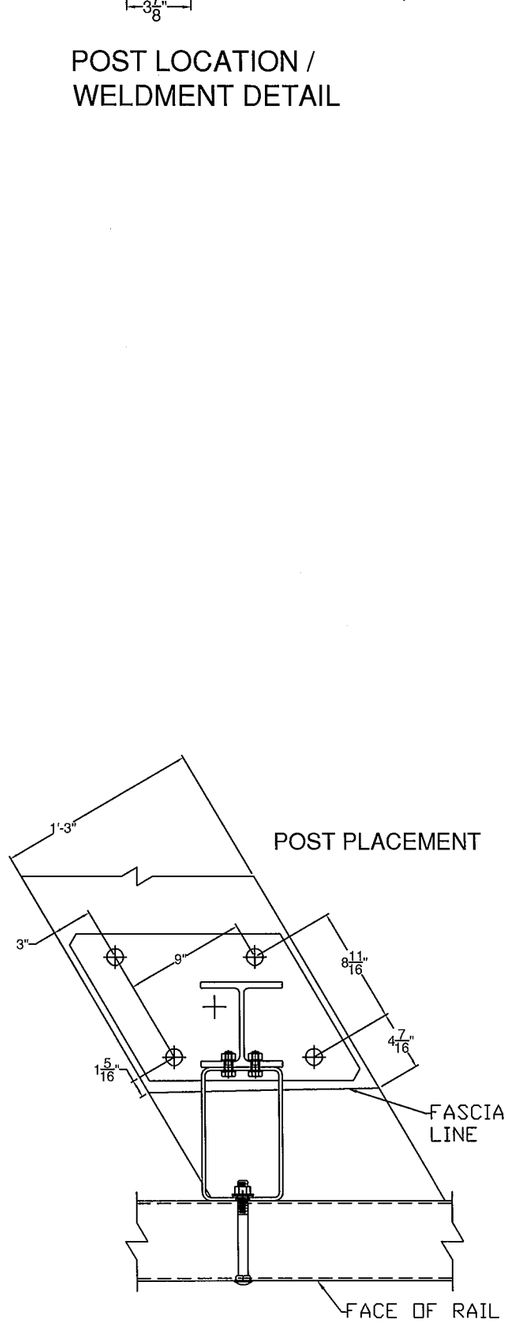


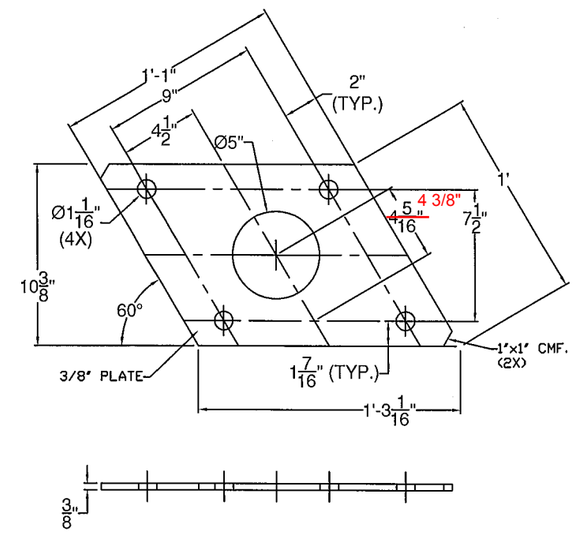


## ANCHOR PLATE DETAIL

ITEM #: 900.620

SHEET 7 OF 7

STRUCTURAL STEEL TO COMPLY W/ ASTM A6

TOLERANCE UNLESS OTHERWISE NOTED:
FRACTIONS = ± 1/16"
ANGLES = ± 1/2°
DIAMETERS = ± 1/32"

Vermont Agency of Transportation
RECEIVED
CK'D BY GFR OK'D BY
Jan. 13, 2015
RESUBMIT ×
BY C. Carlson DATE 05-12-2015

# SPECIAL PROVISION, GRAS - CONCRETE COMBINATION BR.

EM14-184, PROJECT: RUTLAND CITY, BRF 3000(16)
TOWN OF RUTLAND, RUTLAND COUNTY, VT

| REV | NO. | DATE | DESCRIPTION | BY | REV | NO. | DATE | DESCRIPTION | BY |
|---|---|---|---|---|---|---|---|---|---|
| | | | | | | | | | |


ELDERLEE, INC.
OAKS CORNERS, NEW YORK 14518
E-Mail: dlong@elderlee.com / epeek@elderlee.com
Tel: 315-789-6670 Fax: 315-789-6615


AISC CERTIFIED FABRICATOR

| | | |
|---|---|---|
| DRAWN | E.P. | 12/17/14 |
| CHECKED | D.L. | |
| APPROVED | M.V. | . |
| SCALE | SCHEMATIC | |
| DRAWING NO. | FR L - RUTLAND-T | |