KUBRICKY CONSTRUCTION CORP.
269 BALLARD ROAD

WILTON, NY 12831
518 792-5864

KUBRICKY CONSTRUCTION CORP.
A PROUD MEMBER OF THE D.A. COLLINS™ COMPANIES

Rutland City BRF 3000 (2014036)
SUBMITTAL 19

Issued **12/01/14**
Respond by 12/15/14

To

Timothy Pockette, PE

Topic	Disc Bearing Shop Drawings
Status	For Approval
Spec section	531.15
Reference	BR2 River Street Pier Bearing Shop Drawings
Received from submitter	11/26/14
Sent to approver	12/1/14
Required from approver	12/15/14

From

Volker Burkowski

Signed by _____ Date 12/1/14

Proceed as Indicated _____ Date _____
Owner Authorized Representative

DS Brown Company
300 East Cherry Street
North Baltimore, OH 45872
(419) 257-3561
(419) 257-0332 [Engineering Fax #]

D.S. BROWN
A GIBRALTAR INDUSTRIES COMPANY

Date: November 26, 2014

Kubricky Construction Corporation
Volker Burkowski
269 Ballard Road
Wilton, NY 12831
Telephone #: (518) 792-5864

DSB Project #:	45525-1114-1
Description:	River Street (TH 8) over Otter Creek
Owner Project #:	BRF 3000(16)
County, State:	Rutland County, VT
Customer PO:	201403606

The following documents are being submitted for:

- ☒ *Approval*
- ☐ Distribution
- ☐ Per your Request
- ☐ Information

Drawings submitted via:

- ☐ via FedEx
- ☒ *via e-mail to vburkowski@dacollins.com*

# of Copies	Sheet #s	Document Size	Description
1	GN1, GN2, 1-5	11" x 17"	"Disc Bearing" Shop Drawings
1	9	8 ½" x 11"	Design Calculation

Please note:

- *Disassembly of the bearing is forbidden without authorization from DS Brown Company and without a DS Brown representative present.*
- *The contractor shall exercise caution during handling and installation of the bearings to ensure that the PTFE & Stainless steel sliding surfaces are not damaged. The surfaces shall be masked/protected accordingly prior to any field painting, grouting, or welding.*
- *Repair any coating areas damaged during installation and field welding in accordance with the contract specifications and as approved by the engineer.*
- *Due to design differences, the overall height of the bearings being supplied may differ from the heights shown on the contract plans. The actual bearing heights are given in the data table on the individual detail sheets. Contractor will need to recalculate and modify pedestal elevations accordingly.*

If you have concerns or questions about the content of this submittal, Chad Suon is the Project Engineer and can be reached at (419) 257-7136 or csuon@dsbrown.com .

Please forward the enclosed documents to the appropriate party for review. Return the reviewed documents to DS Brown as soon as possible. Note that once drawings are returned, 14-16 weeks will be required for product fabrication. Your assistance in expediting the approval process would be appreciated.

Remarks:
Please return the review documents to LuAnn Hayfield, Engineering Administrator @ (419) 257-3561 or lhayfield@dsbrown.com.

Volker Burkowski

From: Suon, Chad <csuon@DSBrown.com>
Sent: Wednesday, November 26, 2014 3:11 PM
To: Volker Burkowski
Subject: RE: Submittal For VT | River Street (TH 8) over Otter Creek | State#: BRF 3000(16) | PO:201403606 | DS Brown Project #45525-1114-1

Volker,

I noticed that we didn't put a 1/8" gap between the anchor nut and the top of the sole plate. The contract plans didn't show it, but we usually put the gap to allow the rotation. Please have the reviewer verify and mark the drawings if they want the gap. Also, LuAnn should be forwarding you design calcs to submit with the drawings. Please let me know if you have any questions.

Thank you,

CHAD SUON
D.S. BROWN CO.
ENGINEERING
DIRECT: 419-257-7136
OFFICE: 419-257-3561
FAX: 419-257-0332

From: Hayfield, LuAnn
Sent: Wednesday, November 26, 2014 2:25 PM
To: vburkowski@dacollins.com
Cc: Suon, Chad
Subject: Submittal For VT | River Street (TH 8) over Otter Creek | State#: BRF 3000(16) | PO:201403606 | DS Brown Project #45525-1114-1

Good Afternoon Volker,

Please reply to this email immediately to give us confirmation that the documents have been transferred successfully.

Please find attached to this e-mail the Disc Bearing shop drawings and transmittal letter for the above-referenced project. Please forward to the appropriate party for review.

Thanks for your help . . .

LuAnn Hayfield
Engineering Administrator
(419) 257-3561, ext. 5449
lhayfield@dsbrown.com

TOLERANCE TABLE	
DESCRIPTION	TOLERANCE (INCHES U.N.O.)
OVERALL HEIGHT	−0.000, +0.250
OVERALL PLAN DIMENSIONS	−0.000, +0.125
URETHANE DISC THICKNESS	−0.000, +0.063
URETHANE DISC PLAN DIMENSIONS ≤ 20"	−0.000, +0.125
URETHANE DISC PLAN DIMENSIONS > 20"	−0.000, +0.125
URETHANE DISC FLATNESS	0.002 X NOM. DIMENSION
URETHANE DISC SURFACE FINISH	63 μ" RMS
STEEL PLATE THICKNESS	±0.063
STEEL PLATE PLAN DIMENSIONS ≤ 30"	±0.250
STEEL PLATE PLAN DIMENSIONS > 30"	±0.250
STEEL PLATE FLATNESS IN CONTACT WITH BEARING	0.001 X NOM. DIMENSION
STEEL PLATE FLATNESS: GROUT OR CONCRETE SIDE	0.005 X NOM. DIMENSION
STEEL PLATE FLATNESS: STEEL GIRDER SIDE	0.002 X NOM. DIMENSION
STEEL PLATE FLATNESS: STEEL PLATE SIDE	0.001 X NOM. DIMENSION
STEEL PLATE SURFACE FINISH IN CONTACT WITH BEARING	125 μ" RMS
BEVEL SLOPE	±0.002 RAD
ANCHOR HOLE OR SLOT SIZE	±1/8
ANCHOR HOLE OR SLOT LOCATION	±1/8
SHEAR RESTRICTING ELEMENT DIMENSIONS	−0.000, +0.005
SHEAR RESTRICTING ELEMENT FLATNESS/OUT OF ROUND	0.001 X NOM. DIMENSION
SHEAR RESTRICTING ELEMENT SURFACE FINISH	32 μ" RMS
OTHER MACHINED PARTS THICKNESS	−0.000, +0.063
OTHER MACHINED PARTS PLAN DIMENSIONS	−0.000, +0.063
OTHER MACHINED PARTS FLATNESS	0.002 X NOM. DIMENSION
OTHER MACHINED PARTS SURFACE FINISH	63 μ" RMS

PHYSICAL PROPERTY	ASTM TEST METHOD	REQUIREMENTS	
HARDNESS, TYPE 'D' DUROMETER	D 2240	55	65
MINIMUM TENSILE STRESS, KSI	D 412		
AT 100% ELONGATION		1.9	2.3
AT 200% ELONGATION		3.4	4.0
MINIMUM TENSILE STRENGTH, KSI	D 412	5.0	6.0
MINIMUM ULTIMATE ELONGATION, %	D 412	285	220
MAXIMUM COMPRESSION SET, 22 HR @ 158 °F, %	D 395	40	40

GENERAL NOTES:

1. MATERIALS AND WORKMANSHIP SHALL BE IN ACCORDANCE WITH AASHTO LRFD SPECIFICATIONS FOR HIGHWAY BRIDGES [SECTION 14 (DESIGN) AND SECTION 18 (CONSTRUCTION)], THE STATE OF VERMONT, AGENCY OF TRANSPORTATION STANDARD SPECIFICATIONS FOR CONSTRUCTION, DATED 2011, ITS LATEST REVISION, AND AS AMENDED BY THE SPECIAL PROVISIONS AND THE CONTRACT PLANS.

2. WELDING SHALL CONFORM TO AWS−D1.5 BRIDGE WELDING CODE, AS WELL AS VERMONT SPECIFICATION 506.10.

3. THE POLYETHER URETHANE DISC SHALL MEET THE PHYSICAL PROPERTIES IN TABLE 18.3.2.8−1 OF AASHTO LRFD BRIDGE CONSTRUCTION SPECIFICATIONS (3RD EDITION, 2010) SUMMARIZED IN THE TABLE ON THIS SHEET. THE HARDNESS SHALL BE 62 ±3 DUROMETER, SHORE 'D'. INTERMEDIATE VALUES SHALL BE DETERMINED BY INTERPOLATION. EACH DISC SHALL BE MOLDED AS A SINGLE (MONOLITHIC) PIECE. THE TOP AND BOTTOM OF THE DISC SHALL BE ROUGHENED.

4. ALL SHARP CORNERS OF STEEL MATERIALS SHALL BE REMOVED BY GRINDING OR SANDING.

5. HOLE MUST BE DRILLED OR PUNCHED.

6. IN ACCORDANCE WITH AISC STEEL BRIDGE COMPONENT CERTIFICATION REQUIREMENTS, CALCULATIONS AND DRAWINGS HAVE BEEN REVIEWED BY MARK J. GASE P.E.

7. HLMR "DISC" STYLE BEARING MANUFACTURING FACILITY AND REPRESENTATIVE FOR COORDINATING PRODUCTION:
   THE D.S. BROWN COMPANY
   300 EAST CHERRY STREET
   NORTH BALTIMORE, OHIO 45872
   CSR − MARCIE MCKINNON − (419) 257−3561

SAMPLING AND TESTING NOTES:

1. ALL SAMPLING AND TESTING MUST BE IN ACCORDANCE WITH THE AASHTO LRFD BRIDGE CONSTRUCTION SPECIFICATIONS, SECTION 18.1.5 AND SECTION 18.3.4. TESTING OF THE BEARINGS SHALL BE IN ACCORDANCE WITH THE STATE OF VERMONT, AGENCY OF TRANSPORTATION STANDARD SPECIFICATIONS FOR CONSTRUCTION, DATED 2011, SECTION 531.04(e).

MARKING NOTES:

1. EACH BEARING SHALL BE MARKED WITH THE MANUFACTURER'S NAME, THE BEARING TYPE OR MODEL NUMBER, THE BEARING NUMBER, STATION AHEAD AND THE INSTALLED LOCATION. THE MARKING SHALL BE PERMANENT AND IN A LOCATION THAT WILL BE VISIBLE AFTER ERECTION OF STRUCTURE.

CONTRACTOR NOTES:

1. DUE TO DESIGN DIFFERENCES THE OVERALL HEIGHTS OF THE BEARING BEING SUPPLIED MAY DIFFER FROM THE HEIGHTS SHOWN IN THE CONTRACT PLANS. THESE DIFFERENCES ARE GIVEN IN THE DATA TABLE ON THE INDIVIDUAL BEARING DETAIL SHEETS.

2. WELDING PROCEDURES SHALL BE ESTABLISHED BY THE CONTRACTOR TO RESTRICT THE MAXIMUM TEMPERATURE TO 200°F (193°C) FOR SURFACES IN CONTACT WITH THE URETHANE DISC. TEMPERATURES SHALL BE DETERMINED BY TEMPERATURE INDICATING WAX PENCILS OR OTHER SUITABLE MEANS. PROTECT THE URETHANE DISC FROM ANY WELDING HEAT, SPLATTER, SPARK AND FLASH. WELD CURRENT SHALL NOT PASS BETWEEN BEARING COMPONENTS.

3. BEARINGS ARE TO BE SHIPPED AS COMPLETE UNITS, STEEL BANDED, AND SHALL BE WRAPPED TO PROTECT FROM MOISTURE AND DIRT DURING TRANSIT AND STORAGE. BEARINGS SHALL BE STORED IN A CLEAN, DRY, LEVEL UPRIGHT POSITION WHILE AT JOBSITE. BEARINGS SHALL BE LIFTED FROM THEIR UNDERSIDES ONLY.

4. AT NO TIME MAY THE BEARINGS BE DISASSEMBLED WITHOUT AUTHORIZATION FROM D.S. BROWN OR WITHOUT THE PRESENCE OF A D.S. BROWN REPRESENTATIVE.

5. METALIZING THAT HAS BEEN DAMAGED IN THE FIELD SHALL BE REPAIRED IN ACCORDANCE WITH THE REQUIREMENTS OF THE STATE OF VERMONT, AGENCY OF TRANSPORTATION STANDARD SPECIFICATIONS FOR CONSTRUCTION, DATED 2011, SECTION 726.08.

REV.	DESCRIPTION	DATE	DET.	CKD.

D.S. BROWN
A GIBRALTAR INDUSTRIES COMPANY
THE D.S. BROWN COMPANY
300 E. CHERRY STREET
NORTH BALTIMORE, OHIO 45872
419.257.3561
FAX: 419.257.0332
WWW.DSBROWN.COM

	ITEM	QUANTITY
LOCATION — RIVER ST. OVER OTTER CREEK	–	–
BRIDGE — 2 (TH 8)	–	–
PROJECT — BRF 3000 (16)	–	–
PROJECT NAME — RUTLAND CITY	–	–
P.O. NO. — 201403606	–	–
DESIGNER — EVANS−MONGEON	–	–
CUSTOMER — KUBRICKY CONSTRUCTION CORP.	–	–
	–	–
	–	–

DESCRIPTION: GENERAL NOTES & TOLERANCE TABLE
RUTLAND CO., VT

SCALE:	DRAWN BY:	CHECKED BY:	DATE:	
N.T.S.	DA	CMS	11/19/14	–
PROJECT NUMBER	PRODUCT CODE	RELEASE	SHEET	
45525	1114	1	GN1	

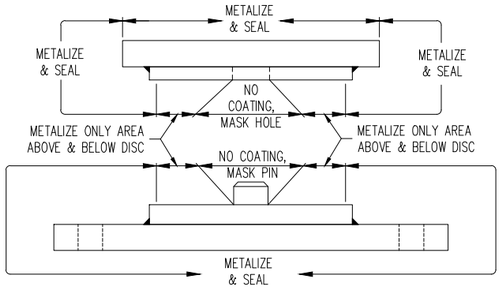

FIXED HLMR COATING LIMITS

PROTECTIVE COATING NOTES:

1. ALL MILL SCALE SHALL BE REMOVED FROM BEARINGS BY BLASTING (SSPC-SP5) PRIOR TO APPLYING PROTECTIVE.

2. METALIZATION SHALL BE IN ACCORDANCE WITH ANSI/AWS C2.18-93 EXTERNAL STEEL SURFACES SHALL BE METALIZED TO A MINIMUM THICKNESS OF 6 MILS. PROVIDE WIRE MATERIAL FOR THE METALIZED PRIMER CONSISTING OF PURE ZINC (99.9% PURITY).

3. WITHIN 8 HOURS AFTER METALIZATION, THE EXTERNAL STEEL SURFACES SHALL RECEIVE A SEAL COAT IN ACCORDANCE WITH THE MANUFACTURER'S RECOMMENDATIONS.
   SEAL COAT = CARBOLINE RUSTBOND, D.F.T. = 2 MILS MIN.

4. SEE COATING LIMIT DETAILS FOR COATING LOCATIONS.

5. PRIOR TO METALIZING ALL CORNERS AND EDGES OF THE STEEL PLATES, SHAPES, ETC., SHALL BE GROUND TO 0.063" RADIUS.

REV.	DESCRIPTION	DATE	DET.	CKD.

D.S. BROWN
A GIBRALTAR INDUSTRIES COMPANY
THE D.S. BROWN COMPANY
300 E. CHERRY STREET
NORTH BALTIMORE, OHIO 45872
419.257.3561
FAX: 419.257.0332
WWW.DSBROWN.COM

	ITEM	QUANTITY
LOCATION — RIVER ST. OVER OTTER CREEK	–	–
BRIDGE — 2 (TH 8)	–	–
PROJECT — BRF 3000 (16)	–	–
PROJECT NAME — RUTLAND CITY	–	–
P.O. NO. — 201403606	–	–
DESIGNER — EVANS-MONGEON	–	–
CUSTOMER — KUBRICKY CONSTRUCTION CORP.	–	–
	–	–

DESCRIPTION:
COATING NOTES & COATING LIMITS
RUTLAND CO., VT

SCALE:	DRAWN BY:	CHECKED BY:	DATE:	
N.T.S.	DA	CMS	11/19/14	–

PROJECT NUMBER	PRODUCT CODE	RELEASE	SHEET
45525	1114	1	GN2

MK	QTY	DESCRIPTION
1A	5	DF-529
1sp1	5	SOLE PLATE
1ub1	5	UPPER BEARING PLATE
1lb1	5	LOWER BEARING PLATE
1ud1	5	URETHANE DISC
1pn1	5	SHEAR PIN
1mp1	5	MASONRY PLATE
1FA	5	UNDERLAYMENT (*SL)
1B	20	SWEDGE ROD (*SL)
1C	20	HEAVY HEX NUT (*SL)
1D	20	WASHER PLATE (*SL)

HLMR BEARING ASSEMBLY LOCATION & LRFD DESIGN INFORMATION (DF)

MK	QTY	STRUCTURE	BEARING TYPE	LOCATION	MAX VERT. SERVICE	MAX VERT. STRENGTH	MAX HORIZ. SERVICE	MAX HORIZ. STRENGTH	LONG MVMNT	TRANS MVMNT	ROTATION (RAD)	HEIGHT TO FABRICATE	HEIGHT IN PLANS	DIFFERENCE IN PLANS	UNDERLAYMENT IN HEIGHT (Y/N)
1A	5	BRIDGE NO. 2 (TH 8)	DF-529	PIER: GDR 1 - GDR 5	529.0 kips	765.0 kips	110.0 kips	127.0 kips	0	0	0.02	6.113	6.188	-0.075	NO

ANCHOR ROD SCHEDULE (ALL BEARING STYLES)

ASSEM MK	FOR BRG	PIECE MK	QTY	DIA	LENGTH	PROJ	EMBED	REMARKS	LOCATION	MATERIAL	COATING
1B	1A	1ar1	20	1.500	28.000	10.000	18.000	5" threads, 17" swedge	PIER: GDR 1 - GDR 5	F1554 GR 55	A153-HDG

NUT SCHEDULE (DF)

ASSEM MK	FOR BRG	PIECE MK	QTY	DIA	MATERIAL	COATING
1C	1A	1hn1	20	1.500	A563-DH or A194-2H Heavy Hex	A153-HDG, Dry Lube & Dye

WASHER SCHEDULE (DF)

ASSEM MK	FOR BRG	PIECE MK	QTY	THICKNESS	WIDTH	LENGTH	REMARKS	MATERIAL	COATING
1D	1A	1wp1	20	0.375	3.000	3.000	ø1.875" hole @ ctr	A36	A123-HDG

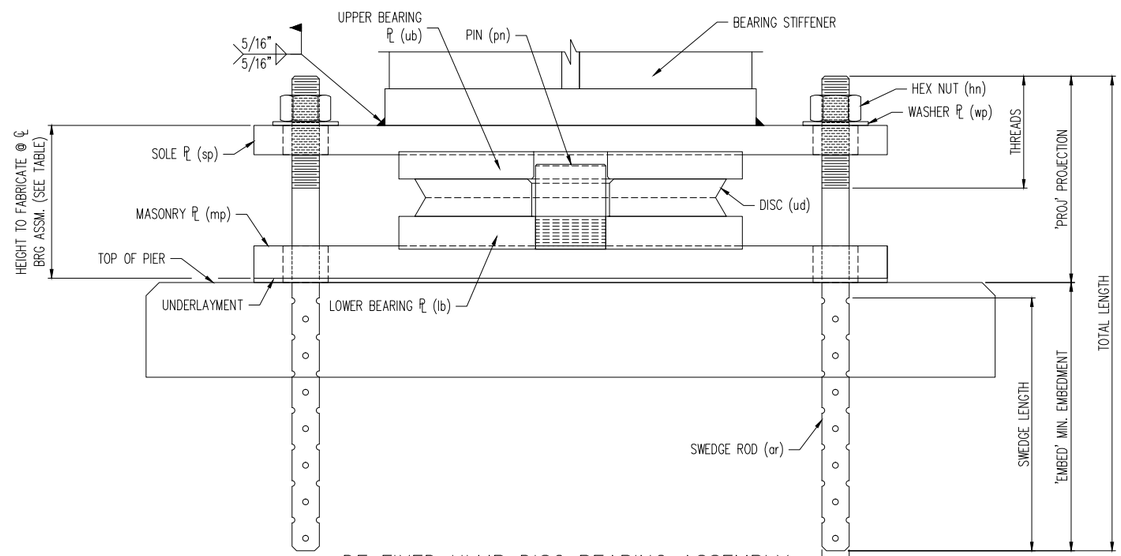

DF FIXED HLMR DISC BEARING ASSEMBLY

PAID ITEM NO. 531.15

* SL = SHIPPED LOOSE
SEE SHT. 02, 03, 04, & 05 FOR SUB-ASSEMBLY DETAILS.
SEE SHT. GN1 FOR GENERAL NOTES & GN2 FOR COATING NOTES & LIMITS.
ALL DIMENSIONS IN INCHES UNLESS OTHERWISE NOTED

REV.	DESCRIPTION	DATE	DET.	CKD.

D.S. BROWN
A GIBRALTAR INDUSTRIES COMPANY
THE D.S. BROWN COMPANY
300 E. CHERRY STREET
NORTH BALTIMORE, OHIO 45872
419.257.3561
FAX: 419.257.0332
WWW.DSBROWN.COM

LOCATION — RIVER ST. OVER OTTER CREEK
BRIDGE — 2 (TH 8)
PROJECT — BRF 3000 (16)
PROJECT NAME — RUTLAND CITY
P.O. NO. — 201403606
DESIGNER — EVANS-MONGEON
CUSTOMER — KUBRICKY CONSTRUCTION CORP.

ITEM	QUANTITY
45525-1114-1	5 OF 5
-	-
-	-
-	-
-	-
-	-
-	-
-	-
-	-

DESCRIPTION: DF FIXED HLMR ASSEMBLY & DESIGN INFORMATION
RUTLAND CO., VT

SCALE:	DRAWN BY:	CHECKED BY:	DATE:	
N.T.S.	DA	CMS	11/19/14	-

PROJECT NUMBER	PRODUCT CODE	RELEASE	SHEET
45525	1114	1	01

ASSEMBLY
01

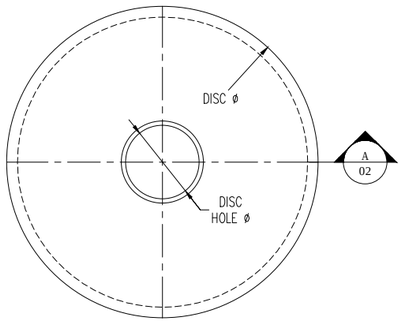

URETHANE DISC PLAN

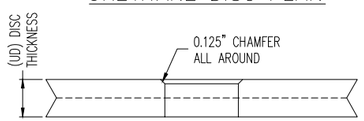

SECTION 'A'

NOTE: THE DISC SHALL BE INSTALLED WITH THE CHAMFER ON THE SHEAR PIN HOLE FACING UP

URETHANE DISC SCHEDULE (DF)						
ASSEM MK	PIECE MK	QTY	UD	DISC ø	DISC HOLE ø	DISC MATERIAL
1A	1ud1	5	1.313	12.688	2.750	Polyether Urethane

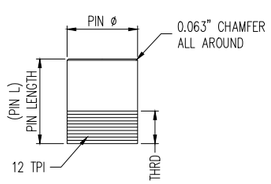

PIN DETAIL

SHEAR PIN SCHEDULE (DF)						
ASSEM MK	PIECE MK	QTY	PIN ø	PIN L	THRD	PIN MATERIAL
1A	1pn1	5	2.625	3.401	1.400	AISI 4000 Series; Fy = 95 ksi (min), Fu = 115 ksi (min)

SEE SHT. 01 ASSEMBLY DETAILS & DESIGN INFORMATION.
SEE SHT. 03, 04, & 05 FOR SUB-ASSEMBLY DETAILS.
ALL DIMENSIONS IN INCHES UNLESS OTHERWISE NOTED

REV.	DESCRIPTION	DATE	DET.	CKD.

D.S. BROWN
A GIBRALTAR INDUSTRIES COMPANY
THE D.S. BROWN COMPANY
300 E. CHERRY STREET
NORTH BALTIMORE, OHIO 45872
419.257.3561
FAX: 419.257.0332
WWW.DSBROWN.COM

	ITEM	QUANTITY
LOCATION — RIVER ST. OVER OTTER CREEK	–	–
BRIDGE — 2 (TH 8)	–	–
PROJECT — BRF 3000 (16)	–	–
PROJECT NAME — RUTLAND CITY	–	–
P.O. NO. — 201403606	–	–
DESIGNER — EVANS-MONGEON	–	–
CUSTOMER — KUBRICKY CONSTRUCTION CORP.	–	–
	–	–

DESCRIPTION:
DF FIXED HLMR SUB-ASSEMBLY DETAILS
RUTLAND CO., VT

SCALE:	DRAWN BY:	CHECKED BY:	DATE:	
N.T.S.	DA	CMS	11/19/14	–

PROJECT NUMBER	PRODUCT CODE	RELEASE	SHEET
45525	1114	1	02

ASSEMBLY
01

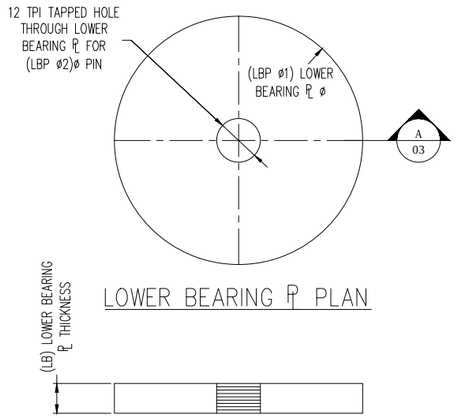

LOWER BEARING ℄ PLAN

SECTION 'A'

LOWER BEARING PLATE SCHEDULE (DF)						
ASSEM MK	PIECE MK	QTY	LB	LBP ø1	LBP ø2	LBP MATERIAL
1A	1lb1	5	1.400	15.000	2.625	A709 GR 50W

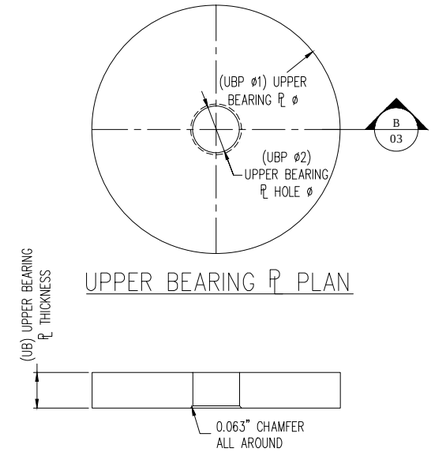

UPPER BEARING ℄ PLAN

SECTION 'B'

UPPER BEARING PLATE SCHEDULE (DF)						
ASSEM MK	PIECE MK	QTY	UB	UBP ø1	UBP ø2	UBP MATERIAL
1A	1ub1	5	1.400	15.000	2.688	A709 GR 50W

SEE SHT. 01 ASSEMBLY DETAILS & DESIGN INFORMATION.
SEE SHT. 02, 04, & 05 FOR SUB-ASSEMBLY DETAILS.
ALL DIMENSIONS IN INCHES UNLESS OTHERWISE NOTED

REV.	DESCRIPTION	DATE	DET.	CKD.

D.S. BROWN
A GIBRALTAR INDUSTRIES COMPANY
THE D.S. BROWN COMPANY
300 E. CHERRY STREET
NORTH BALTIMORE, OHIO 45872
419.257.3561
FAX: 419.257.0332
WWW.DSBROWN.COM

	ITEM	QUANTITY
LOCATION — RIVER ST. OVER OTTER CREEK	–	–
BRIDGE — 2 (TH 8)	–	–
PROJECT — BRF 3000 (16)	–	–
PROJECT NAME — RUTLAND CITY	–	–
P.O. NO. — 201403606	–	–
DESIGNER — EVANS-MONGEON	–	–
CUSTOMER — KUBRICKY CONSTRUCTION CORP.	–	–
	–	–

DESCRIPTION:
DF FIXED HLMR SUB-ASSEMBLY DETAILS
RUTLAND CO., VT

SCALE:	DRAWN BY:	CHECKED BY:	DATE:	
N.T.S.	DA	CMS	11/19/14	–

PROJECT NUMBER	PRODUCT CODE	RELEASE	SHEET
45525	1114	1	03

ASSEMBLY
01

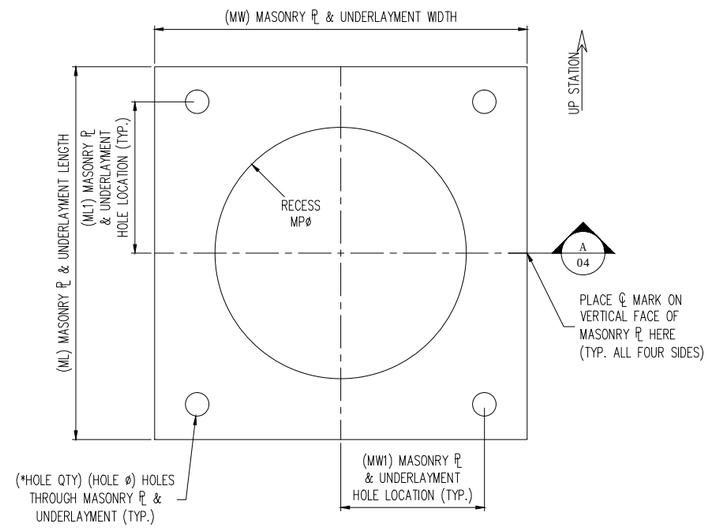

MASONRY ℙ PLAN

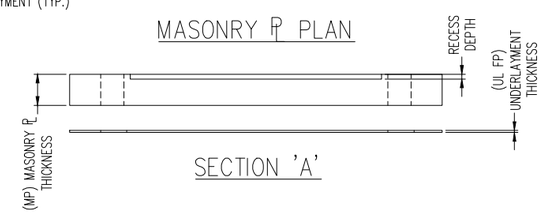

SECTION 'A'

MASONRY PLATE SCHEDULE (DF)															
ASSEM MK	PIECE MK	QTY	MP	MW	ML	RECESS MPø	RECESS DEPTH	MW1	ML1	*HOLE QTY	HOLE ø	UL MK	UL FP	UL MATERIAL	MASONRY PL MATERIAL
1A	1mp1	5	1.250	36.000	27.000	15.063	0.250	15.750	6.750	4	1.875	1FA (1fp1)	0.125	AASHTO (LRFD) 18.10.2	A709 GR 50W

* PER PLATE
SEE SHT. 01 ASSEMBLY DETAILS & DESIGN INFORMATION.
SEE SHT. 02, 03, & 05 FOR SUB-ASSEMBLY DETAILS.
ALL DIMENSIONS IN INCHES UNLESS OTHERWISE NOTED

REV.	DESCRIPTION	DATE	DET.	CKD.

D.S. BROWN
A GIBRALTAR INDUSTRIES COMPANY
THE D.S. BROWN COMPANY
300 E. CHERRY STREET
NORTH BALTIMORE, OHIO 45872
419.257.3561
FAX: 419.257.0332
WWW.DSBROWN.COM

	ITEM	QUANTITY
LOCATION — RIVER ST. OVER OTTER CREEK	–	–
BRIDGE — 2 (TH 8)	–	–
PROJECT — BRF 3000 (16)	–	–
PROJECT NAME — RUTLAND CITY	–	–
P.O. NO. — 201403606	–	–
DESIGNER — EVANS-MONGEON	–	–
CUSTOMER — KUBRICKY CONSTRUCTION CORP.	–	–
	–	–

DESCRIPTION:	SCALE:	DRAWN BY:	CHECKED BY:	DATE:	
DF FIXED HLMR SUB-ASSEMBLY DETAILS RUTLAND CO., VT	N.T.S.	DA	CMS	11/19/14	–
	PROJECT NUMBER: 45525	PRODUCT CODE: 1114	RELEASE: 1	SHEET: 04	

ASSEMBLY
01

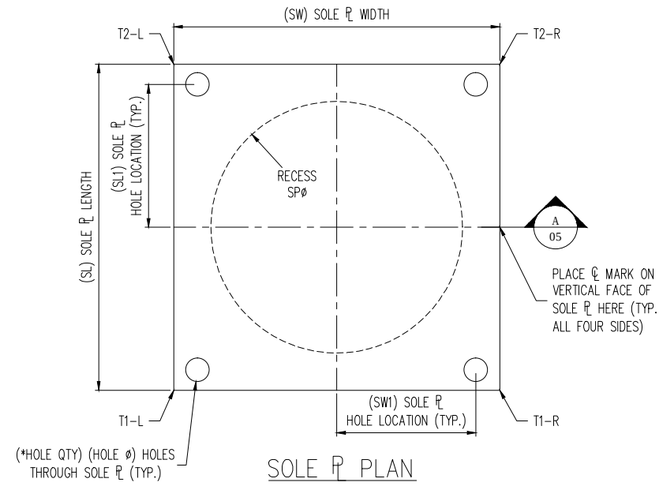

SOLE PL PLAN

SECTION 'A'

SOLE PLATE SCHEDULE (DF)																
ASSEM MK	PIECE MK	QTY	BEVEL T1-L	BEVEL T1-R	BEVEL T2-L	BEVEL T2-R	SP	SW	SL	RECESS SPØ	RECESS DEPTH	SW1	SL1	*HOLE QTY	HOLE Ø	SOLE PLATE MATERIAL
1A	1sp1	5	1.250	1.250	1.250	1.250	1.250	36.000	27.000	15.063	0.250	15.750	6.750	4	1.875	A709 GR 50W

* PER PLATE
SEE SHT. 01 ASSEMBLY DETAILS & DESIGN INFORMATION.
SEE SHT. 02, 03, & 04 FOR SUB-ASSEMBLY DETAILS.
ALL DIMENSIONS IN INCHES UNLESS OTHERWISE NOTED

REV.	DESCRIPTION	DATE	DET.	CKD.

D.S. BROWN
A GIBRALTAR INDUSTRIES COMPANY
THE D.S. BROWN COMPANY
300 E. CHERRY STREET
NORTH BALTIMORE, OHIO 45872
419.257.3561
FAX: 419.257.0332
WWW.DSBROWN.COM

	ITEM	QUANTITY
LOCATION — RIVER ST. OVER OTTER CREEK	–	–
BRIDGE — 2 (TH 8)	–	–
PROJECT — BRF 3000 (16)	–	–
PROJECT NAME — RUTLAND CITY	–	–
P.O. NO. — 201403606	–	–
DESIGNER — EVANS-MONGEON	–	–
CUSTOMER — KUBRICKY CONSTRUCTION CORP.	–	–
	–	–
	–	–

DESCRIPTION:
DF FIXED HLMR SUB-ASSEMBLY DETAILS
RUTLAND CO., VT

SCALE:	DRAWN BY:	CHECKED BY:	DATE:	
N.T.S.	DA	CMS	11/19/14	–

PROJECT NUMBER	PRODUCT CODE	RELEASE	SHEET
45525	1114	1	05

RUTLAND CITY - RIVER ST. OVER OTTER CREEK

PROJECT# BRF 3000 (16), RUTLAND COUNTY, VT.

D.S. BROWN

DISC BEARING DESIGN CALCULATIONS

PROJECT NUMBER:	45525-1114-VT
TYPE:	DF-529 FIXED
LOCATION:	PIER: GDR 1-GDR 5
QUANTITY:	5 TOTAL
FILE:	20014/1045525/ENG/45525-1114-VT/DESIGN/DF-529
ENGINEER:	C. SUON

1) DESIGN INFORMATION AND VARIABLES:

Vertical Service Load: $PV_{service} := 529 \cdot kip$

Vertical Strength Load: $PV_{strength} := 765 \cdot kip$

Horizontal Service Load: $PH_{service} := 110 \cdot kip$

Horizontal Strength/Extreme Load: $PH_{strength} := 127 \cdot kip$ PH = 15% of PV Service (min.) ***AASHTO SECTION 14.7.8.4***

Rotation: $\alpha_{design} := 0.02 \cdot rad$

Urethane Disc Allowable Stress: $\sigma_{disc} := 5.0 \cdot ksi$

Steel Specifications: $F_y := 50 \cdot ksi$ [ASTM A709 GR. 50W]

Pin Steel Specifications: $F_{y_pin} := 95 \cdot ksi$ [AISI 4000 Series]

Minimum Plate Thickness: $t_{min} := 0.75 \cdot in$

Minimum Recess In Plates: $recess_{min} := 0.25 \cdot in$

Welding: $F_{exx} := 70 \cdot ksi$

Compressive Strength of Concrete: $f_c := 3.50 \cdot ksi$

Anchor Rod Diameter: $D_{rod} := 1.5 \cdot in$ $F_{u_rod} := 75 \cdot ksi$ [ASTM F1554 GR 55]

Misc. Info. From Contract Plans:

$SOLE_{length_req} := 27.0 \cdot in$

$SOLE_{width_req} := 36.0 \cdot in$

$MASONRY_{length_req} := 27.0 \cdot in$

$MASONRY_{width_req} := 36.0 \cdot in$

$ANCHOR_{edge_req} := 2.25 \cdot in$

Strength Limit State Resistance Factors:

Bearing:	$\phi_b := 1.00$	***AASHTO SECTION 6.5.4.2***
Shear:	$\phi_v := 1.00$	***AASHTO SECTION 6.5.4.2***
Flexure:	$\phi_f := 1.00$	***AASHTO SECTION 6.5.4.2***
Shear in throat of weld metal:	$\phi_{e2} := 0.80$	***AASHTO SECTION 6.5.4.2***
Bearing on concrete:	$\phi := 0.70$	***AASHTO SECTION 5.5.4.2.1***
Shear connectors:	$\phi_{sc} := 0.85$	***AASHTO SECTION 6.5.4.2***
A325/A490 bolts in shear:	$\phi_{s_bolt} := 0.80$	***AASHTO SECTION 6.5.4.2***
A307/F1554 anchor rods in shear:	$\phi_{s_rod} := 0.75$	***AASHTO SECTION 6.5.4.2***

2) DESIGN URETHANE DISC:

2 A) DIAMETER OF SHEAR RESTRICTING PIN:

$$PIN_{diameter} := \left(\sqrt{\frac{4 \cdot PH_{strength}}{\phi_v \cdot 0.58 \cdot F_{y_pin} \cdot \pi}}\right)$$

AASHTO SECTION 6.10.9.2

$$PIN_{diameter} = 1.713 \cdot in$$

USE $PIN_{diameter} := 2.625 \cdot in$ TO OPTIMIZE MACHINING TIME AND MATERIAL

2 B) DESIGN DIAMETER OF URETHANE DISC:

$$AREA_{required} := \frac{PV_{service}}{\sigma_{disc}} \qquad AREA_{required} = 105.800 \cdot in^2$$

$$AREA_{lost} := \frac{\pi \left(PIN_{diameter} + 0.125 \cdot in\right)^2}{4} \qquad AREA_{lost} = 5.940 \cdot in^2$$

$$DISC_{diameter} := \left[\sqrt{\frac{4 \cdot \left(AREA_{required} + AREA_{lost}\right)}{\pi}}\right] \qquad DISC_{diameter} = 11.928 \cdot in$$

(SMALLEST PLAN DIAMETER OF URETHANE DISC ALLOWABLE)

2 C) THICKNESS OF URETHANE DISC:

USE: $DISC_{thickness} := 1.313 \cdot in$

2 D) OUTSIDE DIAMETER OF URETHANE DISC:

$$DISC_{OD} := round0625\left(DISC_{diameter} + DISC_{thickness} \cdot \tan(30 \cdot deg)\right) \qquad DISC_{OD} = 12.688 \cdot in$$

USE: $DISC_{OD} := 12.688 \cdot in$

$$DISC_{ID} := DISC_{OD} - DISC_{thickness} \cdot \tan(30 \cdot deg) \qquad DISC_{ID} = 11.930 \cdot in$$

$$A_{disc} := \frac{\pi}{4}\left[DISC_{ID}^{\ 2} - \left(PIN_{diameter} + 0.125 \cdot in\right)^2\right] \qquad A_{disc} = 105.841 \cdot in^2$$

$$\sigma_s := \frac{PV_{service}}{A_{disc}} \qquad \sigma_s = 4.998 \cdot ksi$$

MUST BE ≤ $5.0 \cdot ksi$

$$SF := \frac{A_{disc}}{DISC_{thickness} \cdot \pi \cdot DISC_{ID}} \qquad SF = 2.151$$

See the attached graph at the end of these calculations verifying the thickness.

2 E) VERIFY THICKNESS OF URETHANE DISC:

2 Ei) CHECK DEFLECTION:

USE: $\xi := 0.092$ (from graph)

$$\Delta_{st} := \xi \cdot DISC_{thickness}$$

$\Delta_{st} = 0.121 \cdot in$ **MUST BE ≤** $0.10 \cdot DISC_{thickness} = 0.131 \cdot in$

AASHTO SECTION 14.7.8.3

$$\Delta_{lt} := 0.2 \cdot \Delta_{st}$$

$\Delta_{lt} = 0.024 \cdot in$ **MUST BE ≤** $0.08 \cdot DISC_{thickness} = 0.105 \cdot in$

2 Eii) CHECK ROTATION:

$$\alpha_{allow} := 2 \cdot \left(\frac{\Delta_{st}}{DISC_{ID}} \right)$$

$\alpha_{allow} = 0.020$ **MUST BE ≥** $\alpha_{design} = 0.020$

2 F) VERIFY PIN DIAMETER:

2 Fi) CHECK BENDING OF PIN:

$$Engage := \frac{PH_{strength}}{\phi_b \cdot 1.5 \cdot PIN_{diameter} \cdot F_y}$$

$Engage = 0.645 \cdot in$

AASHTO EQUATIONS 6.7.6.2.2-1 & 2

$$d := DISC_{thickness} + \left(\frac{Engage}{2} \right)$$

$d = 1.636 \cdot in$

$M_u := PH_{strength} \cdot d$ $M_u = 208 \cdot kip \cdot in$

$$Z := \frac{PIN_{diameter}^3}{6}$$ $Z = 3.015 \cdot in^3$

$M_n := Z \cdot F_{y_pin}$ $M_n = 286 \cdot kip \cdot in$

$\phi_f \cdot M_n = 286 \cdot kip \cdot in$ **MUST BE ≥** $M_u = 208 \cdot kip \cdot in$

2 Fii) CHECK COMBINED FLEXURE AND SHEAR:

AASHTO EQUATION 6.7.6.2.1-1

$$\frac{6 \cdot M_u}{\phi_f \cdot PIN_{diameter}^3 \cdot F_{y_pin}} + \left(\frac{2.2 \cdot PH_{strength}}{\phi_v \cdot PIN_{diameter}^2 \cdot F_{y_pin}} \right)^3 = 0.803$$

MUST BE ≤ 0.95

3) DETERMINE THE DIMENSIONS OF THE UPPER BEARING PLATE:

3 A) DETERMINE THE OPENING IN THE UPPER BEARING PLATE:

3 Ai) ENGAGEMENT OF THE PIN AND UPPER BEARING PLATE:

$$PIN_{engagement} := \max\left(\text{round0625}\left(\frac{PH_{strength}}{\phi_b \cdot 1.5 \cdot PIN_{diameter} \cdot F_y}\right), 0.25 \cdot in\right)$$

AASHTO EQUATIONS 6.7.6.2.2-1 & 2

$$PIN_{engagement} = 0.688 \cdot in$$

3 Aii) CLEARANCE FROM THE TOP OF THE PIN TO THE TOP OF THE OPENING IN THE UPPER BEARING PLATE:

$$PIN_{clearance} := \text{round0625}\left(0.18 \cdot DISC_{thickness} + \alpha_{design} \cdot PIN_{diameter} + 0.250 \cdot in\right)$$

$$PIN_{clearance} = 0.563 \cdot in$$

3 Aiii) DIAMETER OF THE UPPER BEARING PLATE PIN OPENING:

$$OPENING_{diameter} := PIN_{diameter} + 0.0625 \cdot in$$

$$OPENING_{diameter} = 2.688 \cdot in$$

3 A) UPPER BEARING PLATE THICKNESS:

$$UBP_{t1} := 0.045 \cdot DISC_{OD}$$

$$UBP_{t1} = 0.571 \cdot in$$

AASHTO SECTION 14.7.8.5

$$UBP_{t2} := PIN_{engagement} + PIN_{clearance}$$

$$UBP_{t2} = 1.250 \cdot in$$

$$UBP_{thickness} := \max\left(UBP_{t1}, UBP_{t2}, t_{min}\right)$$

$$UBP_{thickness} = 1.250 \cdot in$$

USE $UBP_{thickness} := 1.40 \cdot in$ TO OPTIMIZE MACHINING TIME AND MATERIAL

3 B) OUTSIDE DIAMETER OF THE UPPER BEARING PLATE:

$$UBP_{diameter} := \text{round125}\left(DISC_{OD} \cdot 1.1 + 1.0 \cdot in\right)$$

$$UBP_{diameter} = 15.000 \cdot in$$

USE $UBP_{diameter} := 15.00 \cdot in$

3 D) DETERMINE THE RECESS REQUIRED FOR UPPER BEARING PLATE CONNECTION:

$$UBP_{recess} := \text{round125}\left(\max\left(\frac{PH_{strength}}{\phi_b \cdot 1.5 \cdot UBP_{diameter} \cdot F_y}, recess_{min}\right)\right)$$

AASHTO EQUATIONS 6.7.6.2.2-1 & 2

$$UBP_{recess} = 0.250 \cdot in$$

4) DETERMINE THE DIMENSIONS OF THE LOWER BEARING PLATE:

4 A) LOWER BEARING PLATE THICKNESS:

$LBP_{t1} := 0.045 \cdot DISC_{OD}$ $\qquad LBP_{t1} = 0.571 \cdot in$ $\qquad$ ***AASHTO SECTION 14.7.8.5***

$LBP_{t2} := \dfrac{PH_{strength}}{\phi_b \cdot 1.5 \cdot PIN_{diameter} \cdot F_y}$ $\qquad LBP_{t2} = 0.645 \cdot in$ $\qquad$ ***AASHTO EQUATIONS 6.7.6.2.2-1 & 2***

$LBP_{thickness} := \max(LBP_{t1}, LBP_{t2}, t_{min})$

$LBP_{thickness} = 0.750 \cdot in$

USE $LBP_{thickness} := 1.40 \cdot in$ $\qquad$ TO OPTIMIZE MACHINING TIME AND MATERIAL

4 B) OUTSIDE DIAMETER OF THE LOWER BEARING PLATE:

$LBP_{diameter} := round125(DISC_{OD} \cdot 1.1 + 1.0 \cdot in)$

$LBP_{diameter} = 15.000 \cdot in$

USE $LBP_{diameter} := 15.00 \cdot in$

4 C) DETERMINE THE RECESS REQUIRED FOR LOWER BEARING PLATE CONNECTION:

$$LBP_{recess} := round125\left(\max\left(\frac{PH_{strength}}{\phi_b \cdot 1.5 \cdot LBP_{diameter} \cdot F_y}, recess_{min}\right)\right)$$

AASHTO EQUATIONS 6.7.6.2.2-1 & 2

$LBP_{recess} = 0.250 \cdot in$

5) DESIGN SOLE PLATE:

5 A) DETERMINE MINIMUM LENGTH OF SOLE PLATE IF UPPER BEARING PLATE IS TO BE RECESSED:

$$SOLE_{length} := UBP_{diameter} + 2 \cdot \left[\max\left[\left[\frac{PH_{strength}}{\left[2 \cdot \left(\frac{UBP_{diameter}}{2} \cdot \sin(1.047)\right)\right] \cdot (\phi_v \cdot 0.58) \cdot F_y} \quad 0.75 \cdot in\right]\right]\right]$$

$SOLE_{length} = 16.500 \cdot in$

5 B) DETERMINE WIDTH OF SOLE PLATE:

$$SOLE_{width} := UBP_{diameter} + 2 \cdot \left[\max\left[\left[\frac{PH_{strength}}{\left[2 \cdot \left(\frac{UBP_{diameter}}{2} \cdot \sin(1.047)\right)\right] \cdot (\phi_v \cdot 0.58) \cdot F_y} \quad 0.75 \cdot in\right]\right]\right]$$

$SOLE_{width} = 16.500 \cdot in$

5 C) DETERMINE FINAL PLAN DIMENSIONS:

THE LARGEST PLAN DIMENSIONS CONTROL:

$SOLE_{length} = 16.500 \cdot in$ $\qquad SOLE_{width} = 16.500 \cdot in$

$SOLE_{length_req} = 27.000 \cdot in$ $\qquad SOLE_{width_req} = 36.000 \cdot in$

USE $SOLE_{length} := 27.00 \cdot in$ $\qquad$ **USE** $SOLE_{width} := 36.00 \cdot in$

5 D) DETERMINE THE THICKNESS OF SOLE PLATE:

Calculation is based on the assumption that the plate acts as cantilever beam with length equal to the distance from the outermost edge of upper bearing plate to the nearest edge of the loaded area. (Assuming a 1.0" section)

INPUT OPTIMIZED TRIAL THICKNESS: $SOLE_{trial} := 1.00 \cdot in$ (DOES NOT INCLUDE RECESS DEPTH)

$$LENGTH_{56} := \sqrt{\frac{\pi \cdot UBP_{diameter}^2}{4}} + 2 \cdot \left(SOLE_{trial} \cdot \tan(56.31 \cdot deg)\right) \qquad LENGTH_{56} = 16.293 \cdot in$$

AASHTO SECTION 14.8.1

$$WIDTH_{56} := \sqrt{\frac{\pi \cdot UBP_{diameter}^2}{4}} + 2 \cdot \left(SOLE_{trial} \cdot \tan(56.31 \cdot deg)\right) \qquad WIDTH_{56} = 16.293 \cdot in$$

$$LENGTH := \min\left(\left(SOLE_{length} \;\; LENGTH_{56}\right)\right) \qquad LENGTH = 16.293 \cdot in$$

$$WIDTH := \min\left(\left(SOLE_{width} \;\; WIDTH_{56}\right)\right) \qquad WIDTH = 16.293 \cdot in$$

$$MOMENT_{max} := \frac{\left(\frac{PV_{strength}}{LENGTH \cdot WIDTH}\right) \cdot \left[\frac{\max((LENGTH \;\; WIDTH)) - \sqrt{\frac{\pi \cdot UBP_{diameter}^2}{4}}}{2}\right]^2}{2} \cdot 1 \cdot in$$

$$MOMENT_{max} = 3.242 \cdot in \cdot kip$$

$$SOLE_{required} := \max\left(\sqrt{\frac{6.0 \cdot MOMENT_{max}}{\phi_f \cdot F_y \cdot 1.0 \cdot in}}, 0.75 \cdot in\right)$$

$SOLE_{required} = 0.750 \cdot in$ **MUST BE ≤** $SOLE_{trial} = 1.000 \cdot in$

THEREFORE,

$$SOLE_{thickness} := SOLE_{trial} + UBP_{recess}$$

$SOLE_{thickness} = 1.250 \cdot in$ MINIMUM (AT MIDPOINT IF BEVELED)

6) DESIGN CONNECTION DEVICES:

6 C) DETERMINE THE TYPE AND QUANTITY OF ANCHOR DEVICES (Assume Threads are in Shear Plane):

$N_s := 1$

AASHTO SECTION 6.13.2.12

$$AREA_{rod} := \frac{\pi \cdot D_{rod}^2}{4}$$

$$R_n := 0.48 \cdot AREA_{rod} \cdot F_{u_rod} \cdot N_s$$

$$REQUIRED_{rod} := \max\left(4, ceil\left(\frac{\frac{PH_{strength}}{\phi_{s_rod} \cdot R_n}}{2}\right) \cdot 2\right) \qquad REQUIRED_{rod} = 4$$

7) DESIGN MASONRY PLATE:

7 A) DETERMINE MINIMUM MASONRY PLATE LENGTH IF LOWER BEARING PLATE IS RECESSED:

$$MASONRY_{length} := \text{round}250\left[LBP_{diameter} + 2\cdot\left[\max\left[\left[\frac{PH_{strength}}{\left[2\cdot\left(\frac{LBP_{diameter}}{2}\cdot\sin(1.047)\right)\right]\cdot\left(\phi_v\cdot 0.58\right)\cdot F_y}\quad 0.75\cdot in\right]\right]\right]\right]$$

$$MASONRY_{length} = 16.500\cdot in$$

7 B) DETERMINE MINIMUM MASONRY PLATE WIDTH:

$$MASONRY_{width} := MASONRY_{width_req}$$

$$MASONRY_{width} = 36.000\cdot in$$

7 C) DETERMINE FINAL PLAN DIMENSIONS:

THE LARGEST PLAN DIMENSIONS CONTROL:

$MASONRY_{length} = 16.500\cdot in$ $\qquad$ $MASONRY_{width} = 36.000\cdot in$

$MASONRY_{length_req} = 27.000\cdot in$ $\qquad$ $MASONRY_{width_req} = 36.000\cdot in$

USE $MASONRY_{length} := 27.00\cdot in$ $\qquad$ **USE** $MASONRY_{width} := 36.00\cdot in$

7 D) DETERMINE THE THICKNESS OF MASONRY PLATE REQUIRED. Calculation is based on the assumption that there is uniform pressure and the plate acts as cantilever beam with length equal to the distance from the outermost edge of lower base plate to the nearest edge of the loaded area. (Assuming a 1.0" section)

INPUT TRIAL THICKNESS: $MASONRY_{trial} := 1.00\cdot in$ (DOES NOT INCLUDE RECESS DEPTH)

$$LENGTH_{56} := \sqrt{\frac{\pi\cdot LBP_{diameter}^2}{4}} + 2\cdot\left(MASONRY_{trial}\cdot\tan(56.31\cdot deg)\right) \qquad LENGTH_{56} = 16.293\cdot in$$

$$WIDTH_{56} := \sqrt{\frac{\pi\cdot LBP_{diameter}^2}{4}} + 2\cdot\left(MASONRY_{trial}\cdot\tan(56.31\cdot deg)\right) \qquad WIDTH_{56} = 16.293\cdot in$$

$$LENGTH := \min\left(\left(MASONRY_{length}\quad LENGTH_{56}\right)\right) \qquad LENGTH = 16.293\cdot in$$

$$WIDTH := \min\left(\left(MASONRY_{width}\quad WIDTH_{56}\right)\right) \qquad WIDTH = 16.293\cdot in$$

$$MOMENT_{max} := \frac{\left(\frac{PV_{strength}}{LENGTH\cdot WIDTH}\right)\cdot\left[\frac{\max((LENGTH\quad WIDTH)) - \sqrt{\frac{\pi\cdot LBP_{diameter}^2}{4}}}{2}\right]^2}{2}\cdot 1\cdot in$$

$$MOMENT_{max} = 3.242\cdot in\cdot kip$$

$$MASONRY_{required} := \max\left(\sqrt{\frac{6.0\cdot MOMENT_{max}}{\phi_f\cdot F_y\cdot 1.0\cdot in}}, t_{min}\right)$$

AASHTO SECTION 6.7.6.2

$MASONRY_{required} = 0.750 \cdot in$ **MUST BE ≤** $MASONRY_{trial} = 1.000 \cdot in$

THEREFORE, THE MINIMUM MASONRY PLATE THICKNESS REQUIRED IS:

$MASONRY_{thickness} := MASONRY_{trial} + LBP_{recess}$

$MASONRY_{thickness} = 1.250 \cdot in$

7 E) CHECK CONCRETE BEARING PRESSURES:

$LENGTH = 16.293 \cdot in$ LENGTH OF LOADED AREA OF CONCRETE

$WIDTH = 16.293 \cdot in$ WIDTH OF LOADED AREA OF CONCRETE

$A_1 := LENGTH \cdot WIDTH$ $A_1 = 265 \cdot in^2$

CHECK THAT $\frac{PV_{strength}}{A_1} = 2.882 \cdot ksi \quad \leq \quad \phi \cdot 0.85 \cdot f_c = 2.083 \cdot ksi$

AASHTO EQUATION 5.7.5-1 and EQUATION 5.7.5-2

IF THAT DOES NOT WORK, INCREASE ALLOWABLE PRESSURE USING A2/A1.

$FRUSTUM_{length} := 27.0 \cdot in$

$FRUSTUM_{width} := 36.0 \cdot in$

INPUT LENGTH AND WIDTH OF THE LOWER BASE OF THE LARGEST FRUSTUM CONTAINED WHOLLY WITHIN THE SUPPORT (PIER OR PEDESTAL).

$FRUSTUM_{max} := \min(FRUSTUM_{length} - LENGTH, FRUSTUM_{width} - WIDTH)$

AASHTO EQUATION 5.7.5-3

$A_2 := [(LENGTH + FRUSTUM_{max}) \cdot (WIDTH + FRUSTUM_{max})]$

$A_2 = 729 \cdot in^2$

CHECK THAT $\frac{PV_{strength}}{A_1} = 2.882 \cdot ksi \quad \leq \quad \phi \cdot 0.85 \cdot f_c \cdot \max\left(1, \min\left(2, \sqrt{\frac{A_2}{A_1}}\right)\right) = 3.451 \cdot ksi$

8) DETERMINE THE FINAL PIN LENGTH:

$PIN_{length} := LBP_{thickness} + DISC_{thickness} + PIN_{engagement}$

$PIN_{length} = 3.401 \cdot in$

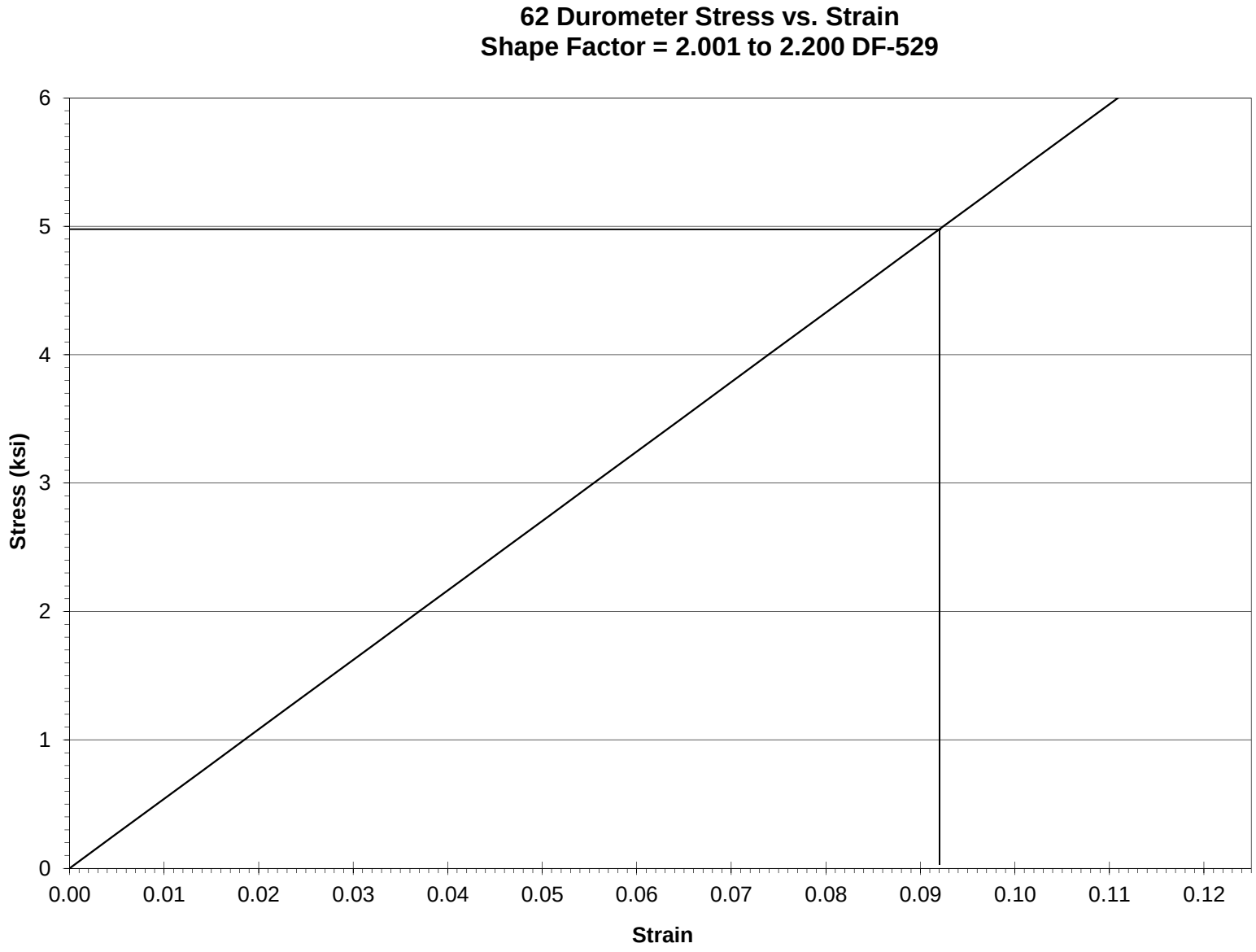
62 Durometer Stress vs. Strain
Shape Factor = 2.001 to 2.200 DF-529
Stress (ksi)
0
1
2
3
4
5
6
0.00
0.01
0.02
0.03
0.04
0.05
0.06
0.07
0.08
0.09
0.10
0.11
0.12
Strain