KUBRICKY CONSTRUCTION CORP.
269 BALLARD ROAD

WILTON, NY 12831
518 792-5864

KUBRICKY CONSTRUCTION CORP.
A PROUD MEMBER OF THE D.A. COLLINS™ COMPANIES
An Equal Opportunity Employer

Rutland City BRF 3000 (2014036)
SUBMITTAL 27.1

Issued 07/01/15
Respond by 07/10/15

To

Timothy Pockette, PE

Topic	900.620 Guardrail Approach Section RESUBMITTAL
Status	For Approval
Spec section	900.620
Responsibility	(16) River Street
Received from submitter	6/3/15
Sent to approver	7/1/15
Required from approver	7/10/15

From

Volker H.D. Burkowski

Signed by _____ Date 7/1/15

Proceed as Indicated _____ Date _____
Owner Authorized Representative

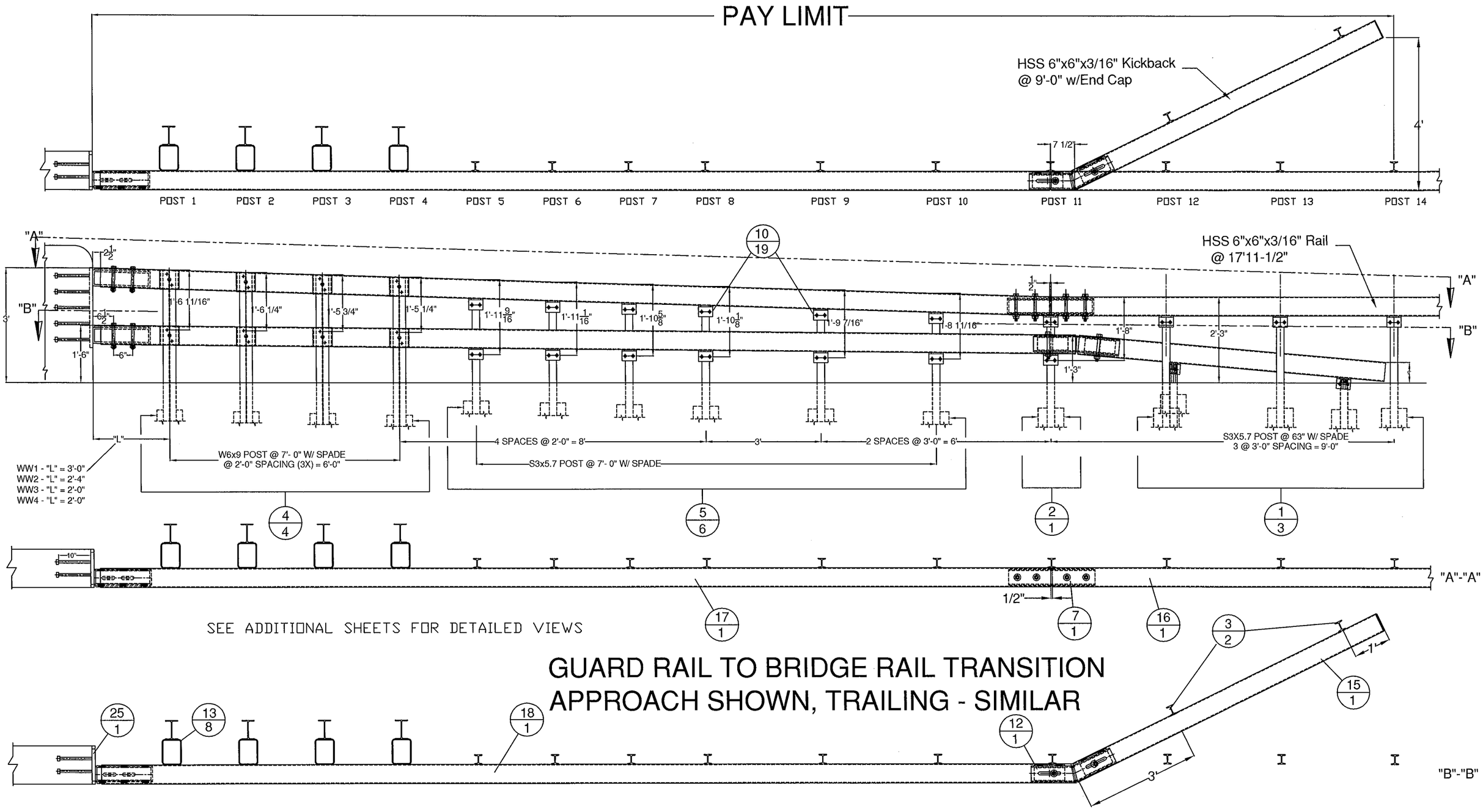

GUARD RAIL TO BRIDGE RAIL TRANSITION
APPROACH SHOWN, TRAILING - SIMILAR

ITEM #: 900.620

SHEET 1 OF 8

STRUCTURAL STEEL TO COMPLY W/ ASTM A6

TOLERANCE UNLESS OTHERWISE NOTED:
FRACTIONS = ± 1/16"
ANGLES = ± 1/2°
DIAMETERS = ± 1/32"

SPECIAL PROVISION, GRAS - CONCRETE COMBINATION BR.

EM14-184, PROJECT: RUTLAND CITY, BRF 3000(16)
TOWN OF RUTLAND, RUTLAND COUNTY, VT

REV	NO.	DATE	DESCRIPTION	BY
	1	6/2/15	REVISED PER 5/12/15 MARK-UP	E.P.

REV	NO.	DATE	DESCRIPTION	BY

ELDERLEE, INC.
OAKS CORNERS, NEW YORK 14518
E-Mail: dlong@elderlee.com / epeek@elderlee.com
Tel: 315-789-6670 Fax: 315-789-6615

AISC CERTIFIED FABRICATOR

DRAWN	E.P.	12/17/14
CHECKED	D.L.	.
APPROVED	M.V.	.
SCALE	SCHEMATIC	
DRAWING NO.	FR L - RUTLAND-T	

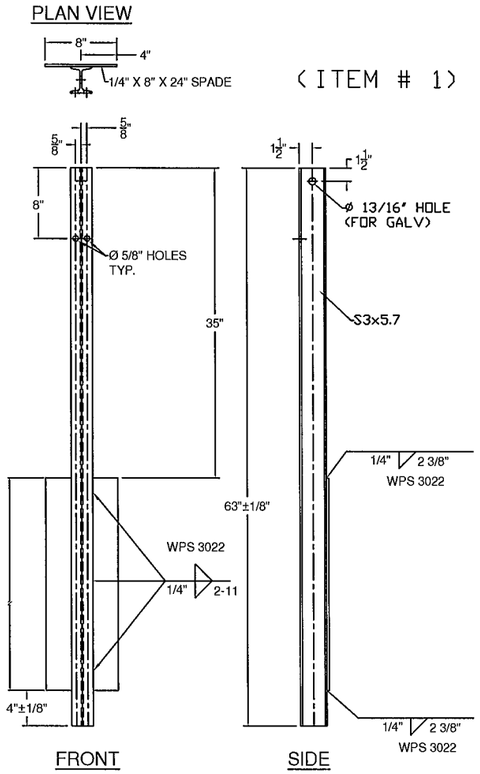

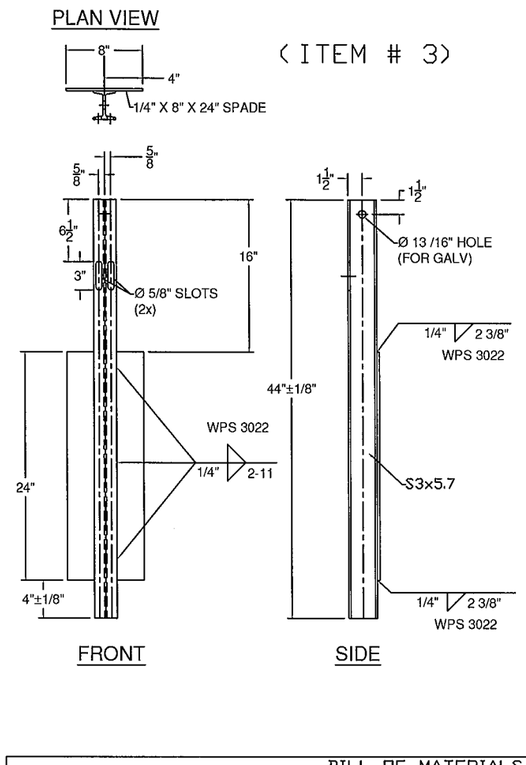

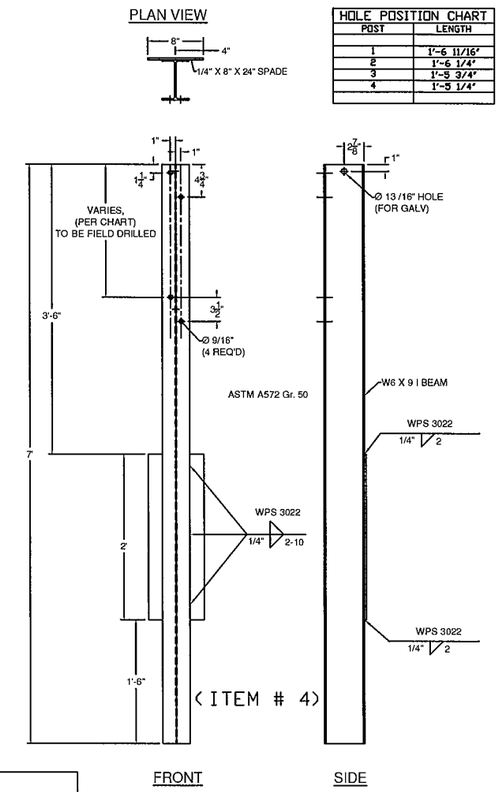

HOLE POSITION CHART	
POST	LENGTH
1	1'-6 11/16"
2	1'-6 1/4"
3	1'-5 3/4"
4	1'-5 1/4"

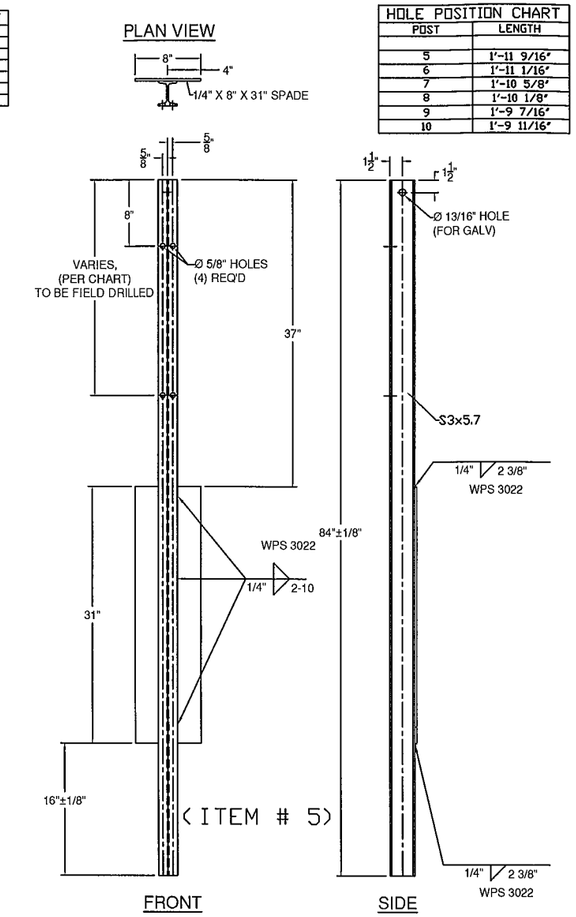

HOLE POSITION CHART	
POST	LENGTH
5	1'-11 9/16"
6	1'-11 1/16"
7	1'-10 5/8"
8	1'-10 1/8"
9	1'-9 7/16"
10	1'-9 11/16"

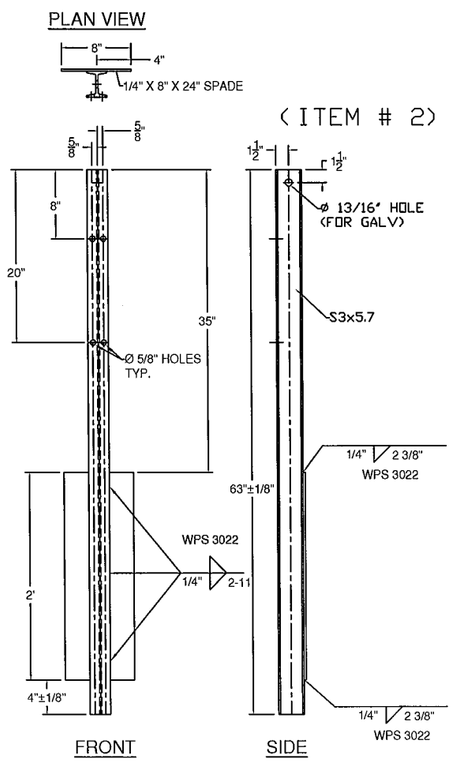

BILL OF MATERIALS, EACH CORNER

ITEM #	QTY.	COMPONENT #	DESCRIPTION	MATERIAL (ASTM)
1	3	0013.57021	3' I-POST, PUNCH 8' W/SPD @ 63' LG	ASTM A572 Gr. 50
2	1	0013.57025	3' I-POST W/SPD @ 63', PUNCH 8', & 20'	ASTM A572 Gr. 50
3	2	0013.57060	3' I-END POST W/SPD @ 3'-8' LG	ASTM A572 Gr. 50
4	4	-	W6X9 POST @ 7' W/SPD & Ø9/16' HOLES @ VARIOUS	ASTM A572 Gr. 50
5	6	-	3' I-POST, PUNCH 8' & VARIOUS', W/8X31' SPADE @ 7'	ASTM A572 Gr. 50
7	1	0033.00640	HSS 5X5 BENT TUBE SPLICE @ 27' LG W/ 1/4' SHIMS	A500 Gr. B / A572 Gr 50
10	19	0054.00050	REG BB SHELF ANGLES @ 4-1/2'	ASTM A36
12	1	0054.00074	HSS 5X5 DBL BEND TUBE SPL @ 26 3/4' LG	A500 Gr. B / A572 Gr 50
13	8	0054.00563	6X8' TRANS. TUBE B/O @ 6' LG	A500 Gr. B
15	1	0054.09000	6X6' BB @ 9'-0' KICKBACK, W/ CAP	A500 Gr. B / A36
*16A	1	0054.18000	6X6' BB @ 17'-11 1/2', DRILL 3' CC (STRAIGHT FOR WW4)	A500 Gr. B
*16B	1	0033.90398	6X6' BB @ 17'-11 1/2', DRILL 3' CC (W/ 31' RAD. FOR WW2)	A500 Gr. B
*16C	1		6X6' BB @ 17'-11 1/2', DRILL 3' CC (W/ 50' RAD. FOR WW1)	A500 Gr. B
*16D	1		6X6' BB @ 17'-11 1/2', DRILL 3' CC (BENT FOR WW3)	A500 Gr. B
*17A	1	0033.91325	6X6' BB TOP TRANS @ 24'-9 1/4' LG (STRAIGHT FOR WW3 & 4)	A500 Gr. B
*17B	1	0033.91329	6X6' BB TOP TRANS @ 25'-1 1/4' LG (W/ 31' RAD. FOR WW2)	A500 Gr. B
*17C	1	0033.91327	6X6' BB TOP TRANS @ 25'-9 1/4' LG (W/ COMPOUND RAD. FOR WW1)	A500 Gr. B
*18A	1	0033.91326	6X6' BB BTM TRANS @ 25'-4 1/2' LG (STRAIGHT FOR WW3 & 4)	A500 Gr. B
*18B	1	0033.91330	6X6' BB BTM TRANS @ 25'-8 1/2' LG (W/ 31' RAD. FOR WW2)	A500 Gr. B
*18C	1	0033.91328	6X6' BB BTM TRANS @ 26'-4 1/2' LG (W/ COMPOUND RAD. FOR WW1)	A500 Gr. B
19	18	0080.03355	3/8' X 7 1/2' BOLT, NUT, & 2 FW	A307, A563, F436
20	19	0080.04100	1/2' x 1-1/2' BOLT, NUT, & FW	A307, A563, F436
21	24	0080.04120	1/2' x 1-1/2' BOLT, NUT, 2 FW & LW	A307, A563, F436
23	10	0080.06340	3/4' X 7-1/2' BOLT, NUT, 2 FW	A325, A563, F436
24	8	0080.06370	3/4' X 8' CARR BOLT, NUT, FW & LW	A307, A563, F436
25	1	0033.90393	PARAPET WALL CONNECTION (APPROACH) WW2 & 3	A500 Gr. B, A572 Gr. 50, A709 Gr. 36
25	1	0033.90394	PARAPET WALL CONNECTION (TRAILING) WW1 & 4	A500 Gr. B, A572 Gr. 50, A709 Gr. 36
26	1	0033.90395	W6x25 POST ON BASE @ 2'9 3/16' OA	ASTM A572 Gr. 50
27	1	0033.90396	SPECIAL 3/8' ANCHOR PLATE	ASTM A36
28	2	0033.90397	10' X 6' X 1/4' BLOCKOUT @ 6'	ASTM A500 Gr. B
29	4	0042.21012	Ø1' STUDS 12' OA W/ 2 1/4' THREAD BOTH ENDS	A449
30	8	0080.18901	Ø1' HEAVY HEX NUT	A563
31	4	0080.18905	Ø1' HEX JAM NUT	A325
32	4	0080.18911	Ø1' FLAT WASHER	F436
33	1	0033.00056	1/8' FABRIC PAD	

ITEMS 26-33 ARE FOR WW1 ONLY

HARDWARE NOTES

ITEM #	FUNCTION
19	BOLT RAIL TO SHELF ANGLE (ITEM #10)
20	BOLT SHELF ANGLE (ITEM # 10) TO POST
21	BOLT BLOCK-OUTS (ITEM # 13) TO HEAVY POST (ITEM # 4)
23	SPLICE TUBING (ITEM #'S 7 & 12), & (4) PER PARAPET WALL CONNECTION
24	BOLT RAIL (ITEMS #'S 17, & 18 TO BLOCK-OUTS (ITEM # 13)

GENERAL NOTES:

1) ALL RAILING IS TO BE FABRICATED AND ERECTED ACCORDING TO SECTION 525 OF THE STANDARD SPECIFICATIONS.
2) BOLTS SHALL BE TORQUED SNUG TIGHT (APPROXIMATELY 100 FT-LB).
3) PROTRUSIONS CAUSED BY WELDING OR GALVANIZING ARE NOT PERMITTED ON THE ADJOINING SURFACES OF THE BOX BEAM RAILS, SPLICE TUBES AND FILL PLATES.
4) ANY BENDING OF RAIL SHALL BE DONE AT THE FABRICATION PLANT. RADII GREATER THAN 16' TO BE CURVED ON A TUBE BENDING MACHINE, RADII LESS THAN 16' TO BE "PIE CUT" AND WELDED. CURVED RAILING WILL HAVE AN 18" LENGTH ON EACH END STRAIGHT TO ACCOMADATE SPLICES.

ITEM #: 900.620

SHEET 2 OF 8

STRUCTURAL STEEL TO COMPLY W/ ASTM A6

TOLERANCE UNLESS OTHERWISE NOTED:
FRACTIONS = ± 1/16"
ANGLES = ± 1/2°
DIAMETERS = ± 1/32"

SPECIAL PROVISION, GRAS - CONCRETE COMBINATION BR.

EM14-184, PROJECT: RUTLAND CITY, BRF 3000(16)
TOWN OF RUTLAND, RUTLAND COUNTY, VT

REV	NO.	DATE	DESCRIPTION	BY
	1	6/2/15	REVISED PER 5/12/15 MARK-UP	E.P.

REV	NO.	DATE	DESCRIPTION	BY

ELDERLEE, INC.
OAKS CORNERS, NEW YORK 14518
E-Mail: dlong@elderlee.com / epeek@elderlee.com
Tel: 315-789-6670 Fax: 315-789-6615

CERTIFIED FABRICATOR

DRAWN	E.P.	12/17/14
CHECKED	D.L.	
APPROVED	M.V.	
SCALE	SCHEMATIC	
DRAWING NO.	FR L - RUTLAND-T	

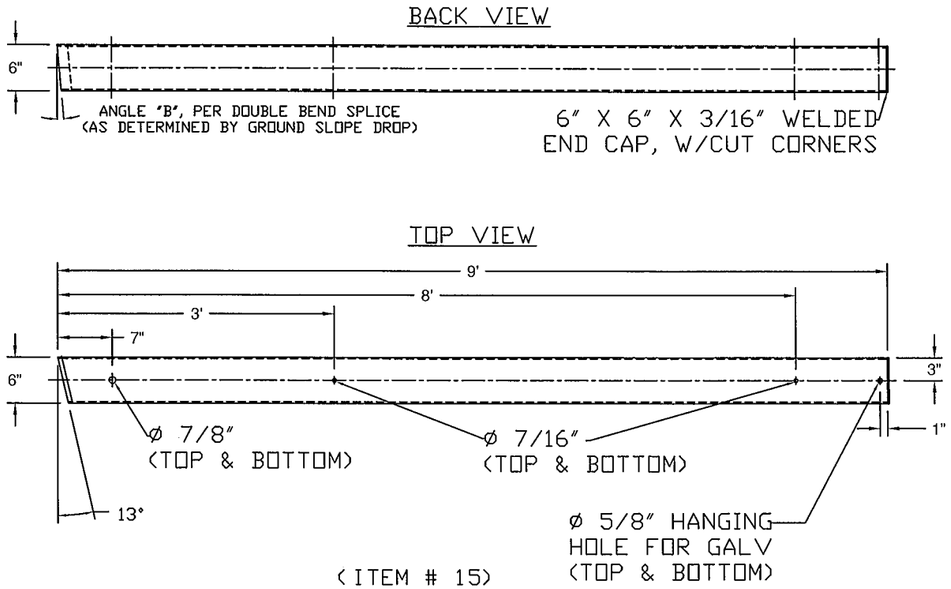

(ITEM # 15)

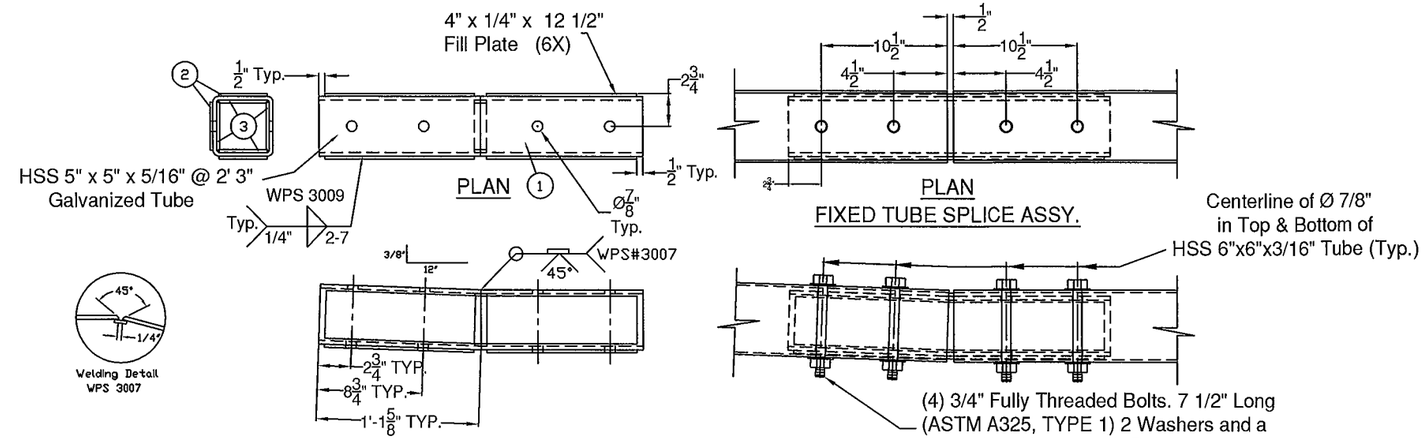

TOP RAIL SPLICE TUBE		
ITEM#	QTY.	DESCRIPTION
1	2	5" X 5" X 5/16" TUBE @ 27" ASTM A500 Gr. B
2	6	1/4" X 4" X 12 1/2" ASTM A36(A709 Gr36)CVN
3	4	3/16" X 1" X 4" BACKER PLATE

(ITEM # 7)

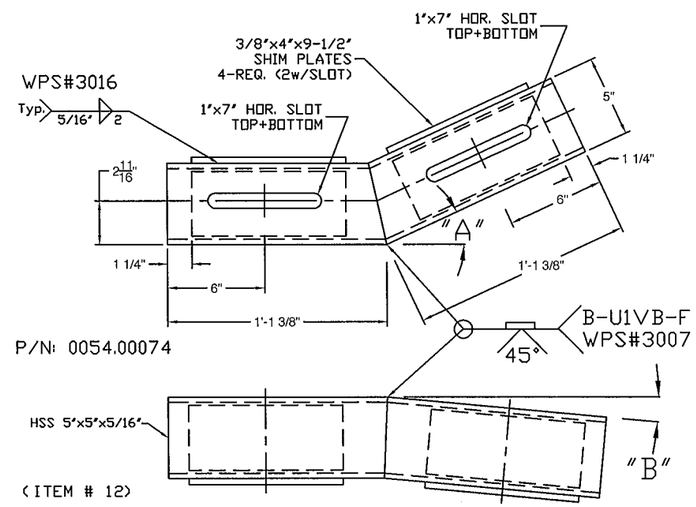

(ITEM # 12)

"A" - SEE PLAN FOR TURN BACK DISTANCE, SET ANGLE ACCORDINGLY.
"B" - TURN DOWN ANGLE SET BY THE 9" MEASURMENT AT THE END OF THE BOX BEAM.

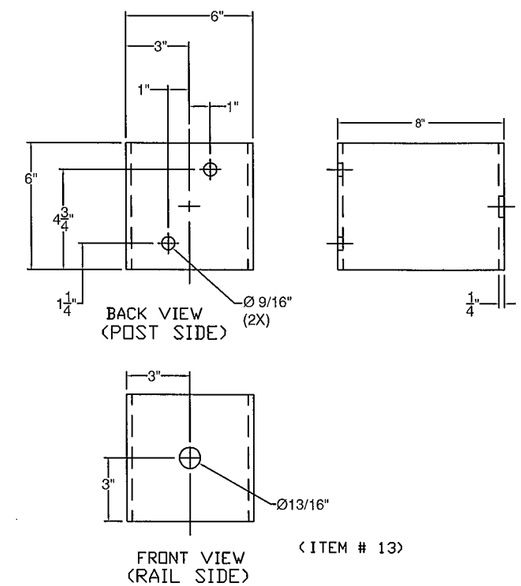

(ITEM # 13)

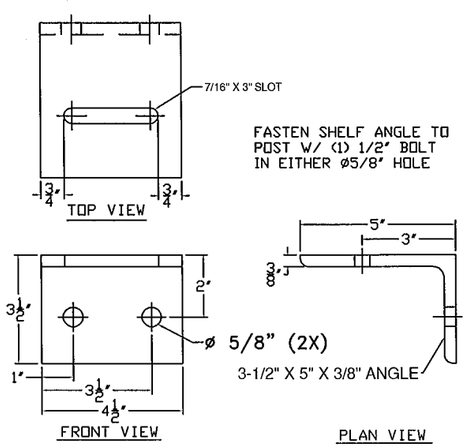

(ITEM # 10)

ITEM #: 900.620

STRUCTURAL STEEL TO COMPLY W/ ASTM A6

TOLERANCE UNLESS OTHERWISE NOTED:
FRACTIONS = ± 1/16"
ANGLES = ± 1/2°
DIAMETERS = ± 1/32"

SHEET 3 OF 8

SPECIAL PROVISION, GRAS - CONCRETE COMBINATION BR.

EM14-184, PROJECT: RUTLAND CITY, BRF 3000(16)
TOWN OF RUTLAND, RUTLAND COUNTY, VT

REV	NO.	DATE	DESCRIPTION	BY
	1	6/2/15	REVISED PER 5/12/15 MARK-UP	E.P.

REV	NO.	DATE	DESCRIPTION	BY

ELDERLEE, INC.
OAKS CORNERS, NEW YORK 14518
E-Mail: dlong@elderlee.com / epeek@elderlee.com
Tel: 315-789-6670 Fax: 315-789-6615

AISC CERTIFIED FABRICATOR

DRAWN	E.P.	12/17/14
CHECKED	D.L.	
APPROVED	M.V.	
SCALE	SCHEMATIC	
DRAWING NO.	FR L - RUTLAND-T	

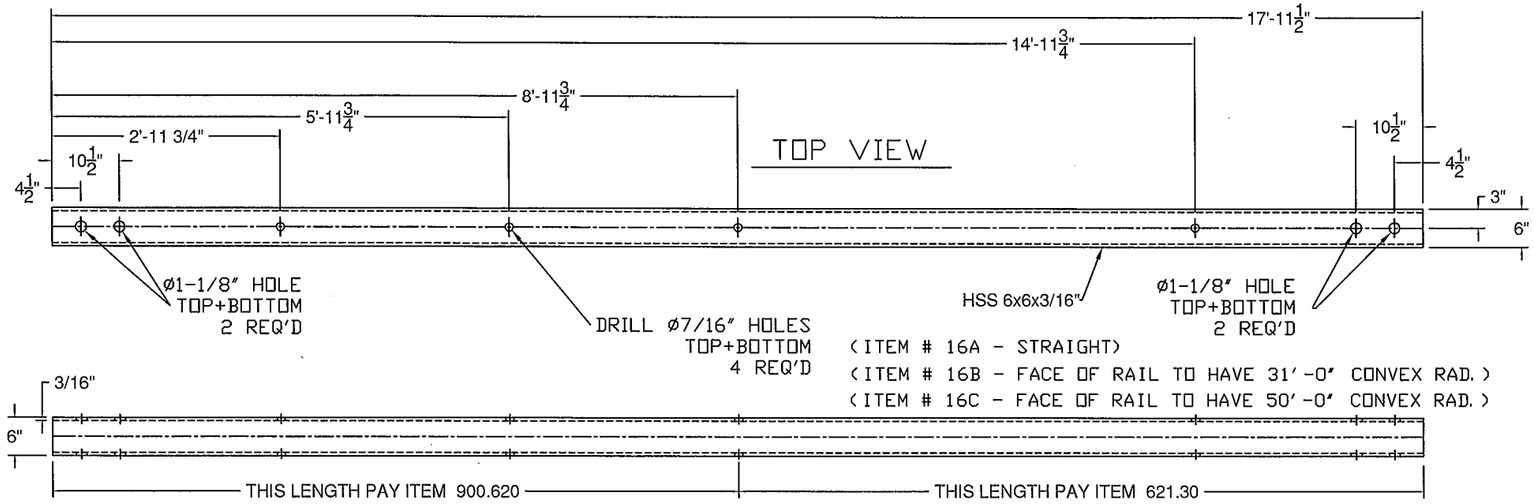

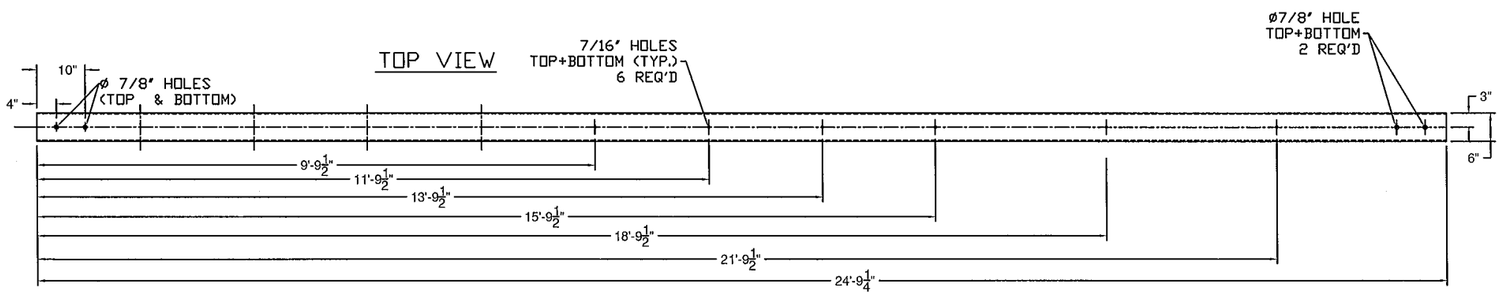

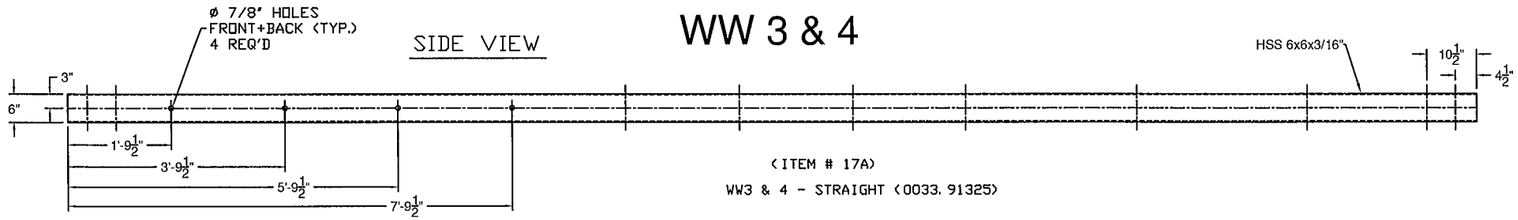

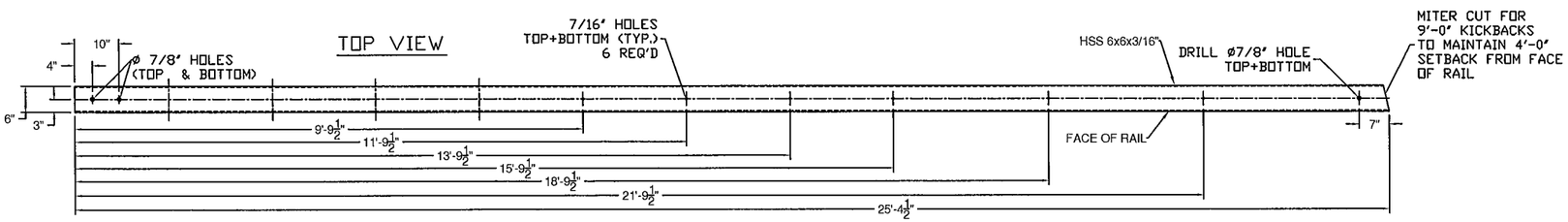

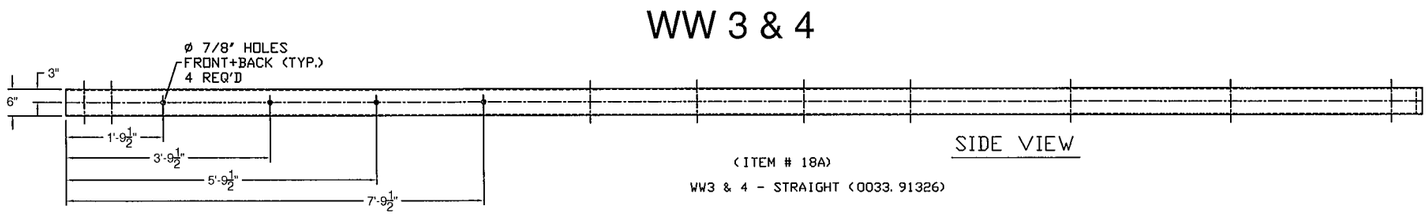

BILL OF MATERIALS			
ITEM #	QTY	DESCRIPTION	ASTM #
1	1	DBL TUBE WALL PLATE - 1' X 12' x 25'	ASTM A572 Gr. 50
2	10	ø3/4' X 10' STUD	NELSON STUD
3	2	5' X 5' X 5/16' TUBE W/ SLOTS @ 18'	ASTM A500 Gr. B
4	2	SHIM PL 1/2' X 4' X 16' W/ SLOTS	ASTM A709 Gr. 36
5	2	SHIM PL 1/2' X 4' X 16' (W/O SLOTS)	ASTM A709 Gr. 36

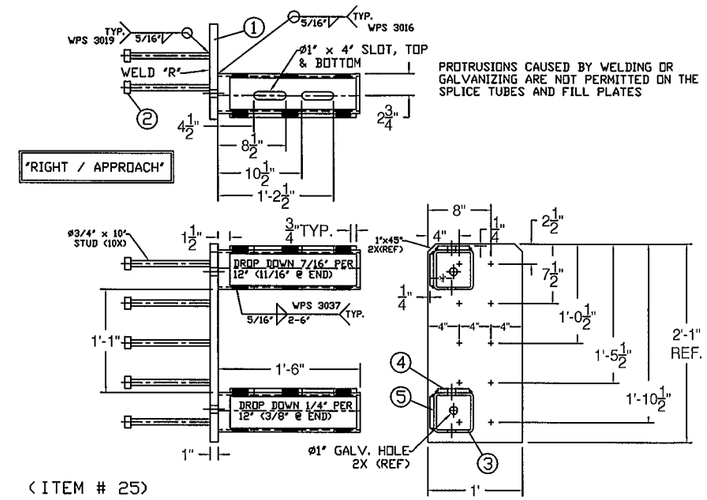

BILL OF MATERIALS			
ITEM #	QTY	DESCRIPTION	ASTM #
1	1	DBL TUBE WALL PLATE - 1' X 12' x 25'	ASTM A572 Gr. 50
2	10	ø3/4' X 10' STUD	NELSON STUD
3	2	5' X 5' X 5/16' TUBE W/ SLOTS @ 18'	ASTM A500 Gr. B
4	2	SHIM PL 1/2' X 4' X 16' W/ SLOTS	ASTM A709 Gr. 36
5	2	SHIM PL 1/2' X 4' X 16' (W/O SLOTS)	ASTM A709 Gr. 36

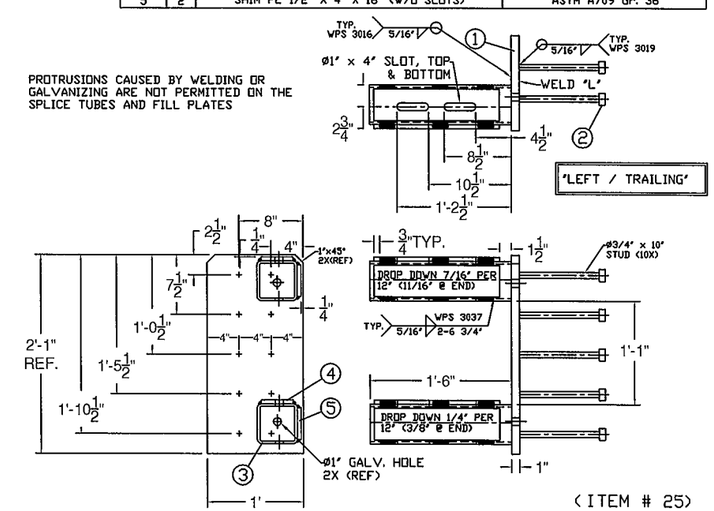

ITEM #: 900.620

SHEET 4 OF 8

STRUCTURAL STEEL TO COMPLY W/ ASTM A6

TOLERANCE UNLESS OTHERWISE NOTED:
FRACTIONS = ± 1/16"
ANGLES = ± 1/2°
DIAMETERS = ± 1/32"

SPECIAL PROVISION, GRAS - CONCRETE COMBINATION BR.

EM14-184, PROJECT: RUTLAND CITY, BRF 3000(16)
TOWN OF RUTLAND, RUTLAND COUNTY, VT

R E V	NO.	DATE	DESCRIPTION	BY	R E V	NO.	DATE	DESCRIPTION	BY
	1	6/2/15	REVISED PER 5/12/15 MARK-UP	E.P.					

ELDERLEE, INC.
OAKS CORNERS, NEW YORK 14518
E-Mail: dlong@elderlee.com / epeek@elderlee.com
Tel: 315-789-6670 Fax: 315-789-6615

AISC CERTIFIED FABRICATOR

DRAWN	E.P.	12/17/14
CHECKED	D.L.	
APPROVED	M.V.	.
SCALE	SCHEMATIC	
DRAWING NO.	FR L - RUTLAND-T	

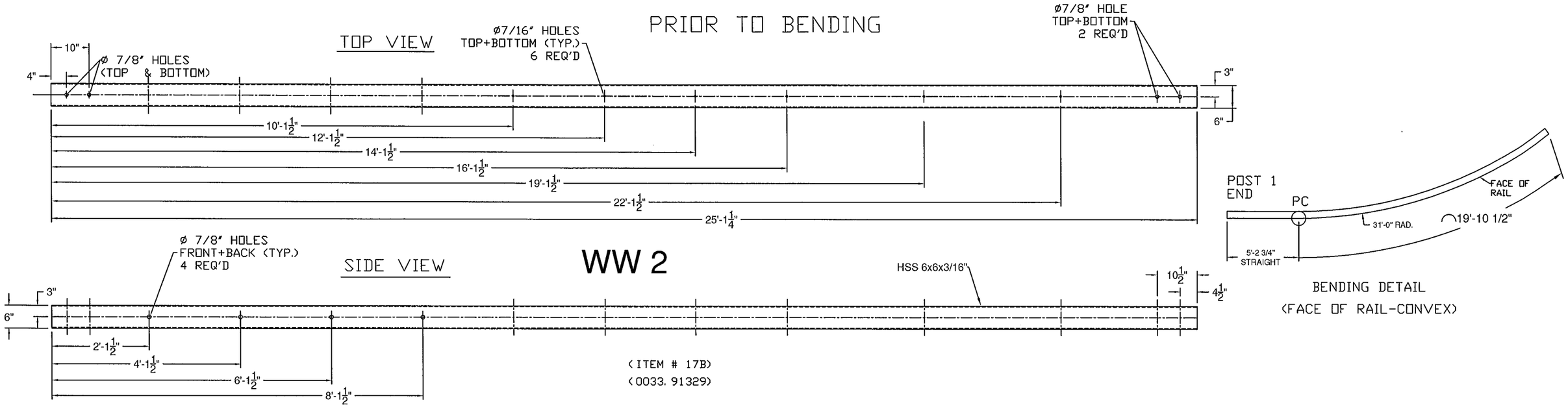

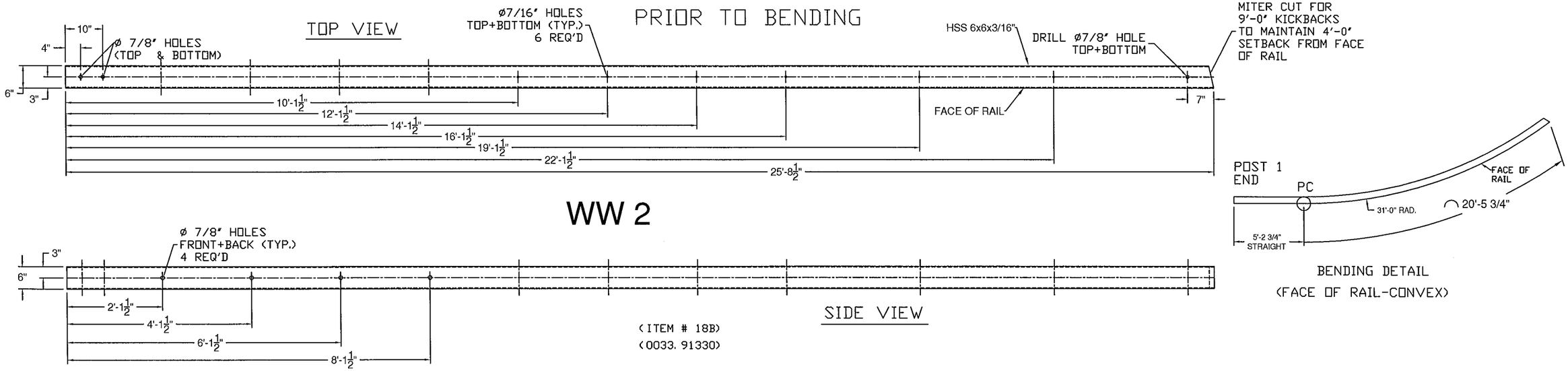

ITEM #: 900.620

SHEET 5 OF 8

STRUCTURAL STEEL TO COMPLY W/ ASTM A6

TOLERANCE UNLESS OTHERWISE NOTED:
FRACTIONS = ± 1/16"
ANGLES = ± 1/2°
DIAMETERS = ± 1/32"

SPECIAL PROVISION, GRAS - CONCRETE COMBINATION BR.

EM14-184, PROJECT: RUTLAND CITY, BRF 3000(16)
TOWN OF RUTLAND, RUTLAND COUNTY, VT

REV	NO.	DATE	DESCRIPTION	BY
	1	6/2/15	REVISED PER 5/12/15 MARK-UP	E.P.

REV	NO.	DATE	DESCRIPTION	BY

ELDERLEE, INC.
OAKS CORNERS, NEW YORK 14518
E-Mail: dlong@elderlee.com / epeek@elderlee.com
Tel: 315-789-6670 Fax: 315-789-6615

CERTIFIED FABRICATOR

DRAWN	E.P.	12/17/14
CHECKED	D.L.	
APPROVED	M.V.	-
SCALE	SCHEMATIC	
DRAWING NO.	FR L - RUTLAND-T	

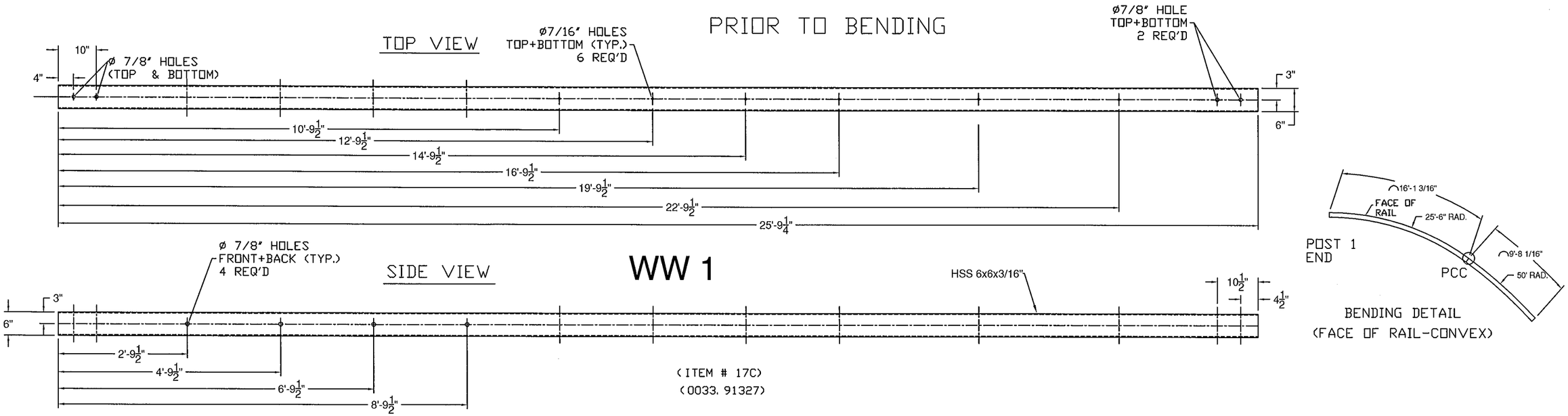

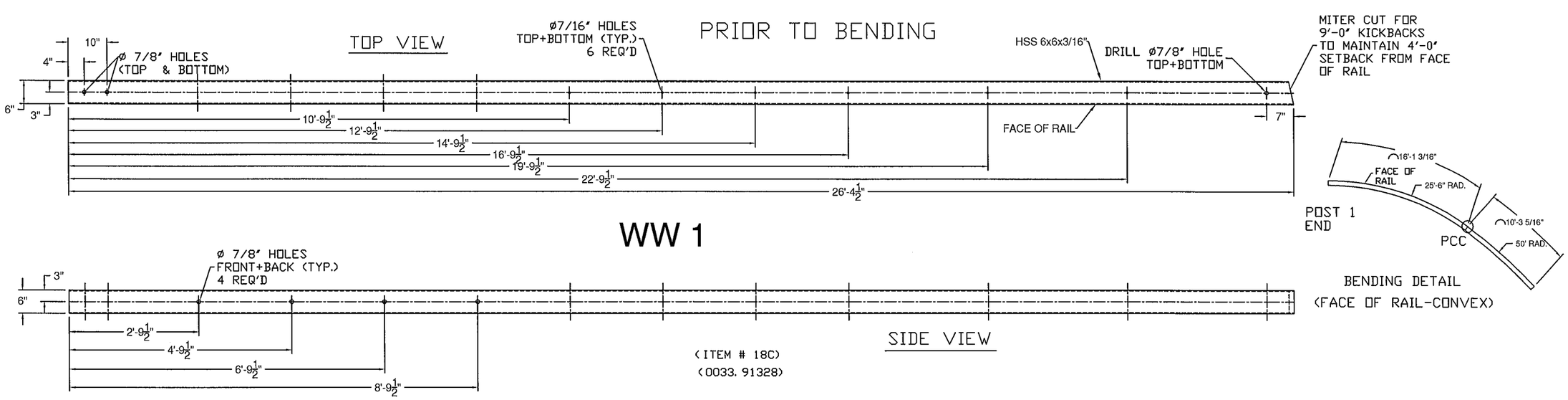

ITEM #: 900.620

SHEET 6 OF 8

STRUCTURAL STEEL TO COMPLY W/ ASTM A6

TOLERANCE UNLESS OTHERWISE NOTED:
FRACTIONS = ± 1/16"
ANGLES = ± 1/2°
DIAMETERS = ± 1/32"

SPECIAL PROVISION, GRAS - CONCRETE COMBINATION BR.

EM14-184, PROJECT: RUTLAND CITY, BRF 3000(16)
TOWN OF RUTLAND, RUTLAND COUNTY, VT

R E V	NO.	DATE	DESCRIPTION	BY	R E V	NO.	DATE	DESCRIPTION	BY
	1	6/2/15	REVISED PER 5/12/15 MARK-UP	E.P.					

ELDERLEE, INC.
OAKS CORNERS, NEW YORK 14518
E-Mail: dlong@elderlee.com / epeek@elderlee.com
Tel: 315-789-6670 Fax: 315-789-6615

AISC CERTIFIED FABRICATOR

DRAWN	E.P.	12/17/14
CHECKED	D.L.	
APPROVED	M.V.	
SCALE	SCHEMATIC	
DRAWING NO.	FR L - RUTLAND-T	

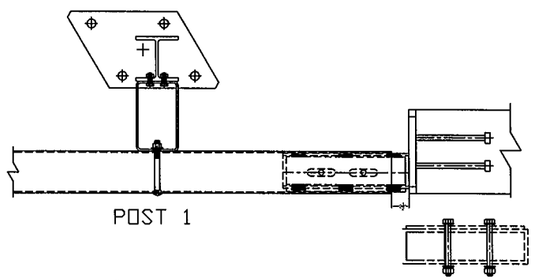

WW1 DETAIL

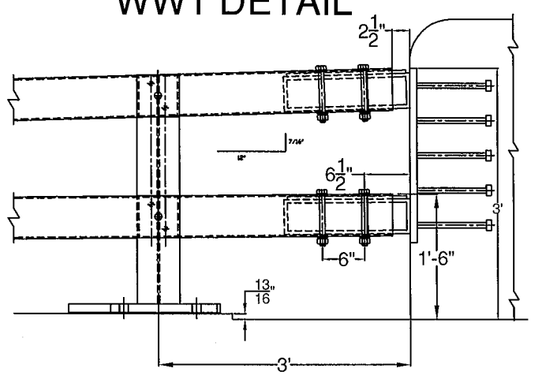

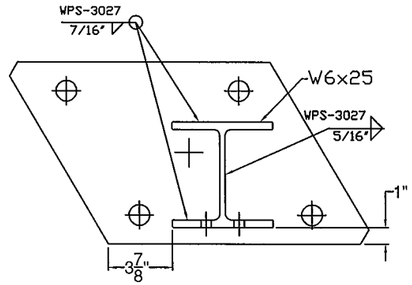

POST LOCATION / WELDMENT DETAIL

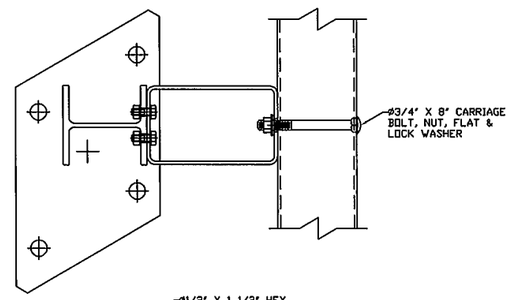

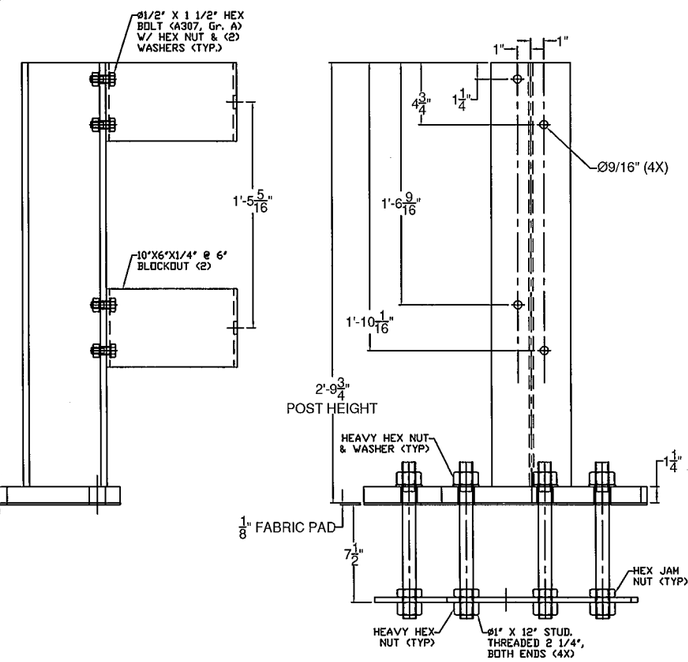

POST & ANCHORAGE DETAIL

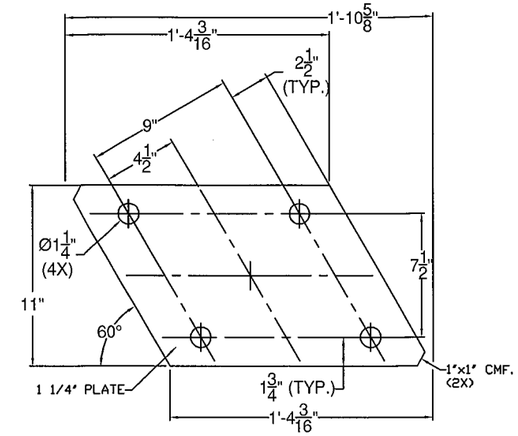

BASE PLATE DETAIL & 1/8" PAD DETAIL

FR LAFAYETTE
RUTLAND
P/N: 0033.90396
MAT: A36
QTY: 1

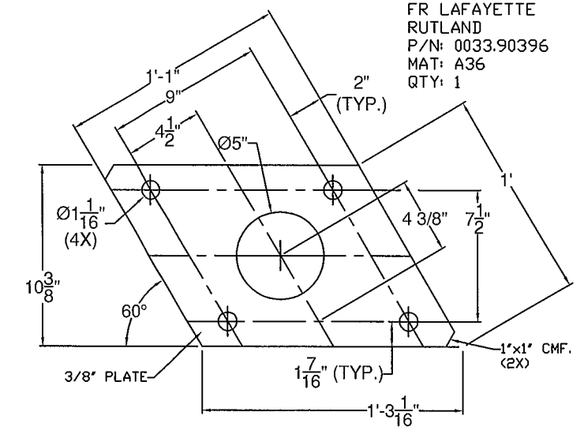

RUTLAND-1.TXT

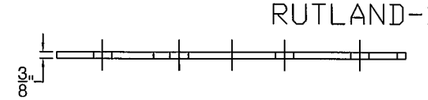

ANCHOR PLATE DETAIL

FR LaFAYETTE-WINDSOR
ITEM #13, P/N: 0054.00563
MAT: A500 Gr. B
QTY: 32

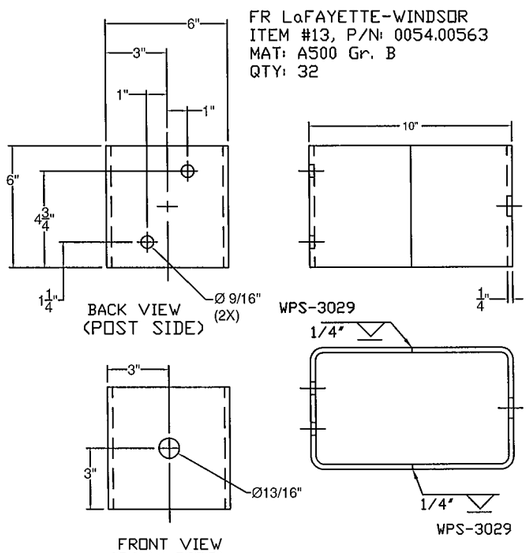

(ITEM # 28)

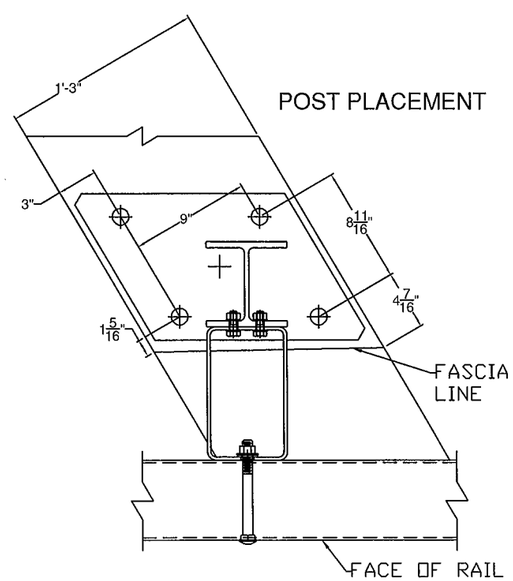

ITEM #: 900.620

SHEET 7 OF 8

STRUCTURAL STEEL TO COMPLY W/ ASTM A6

TOLERANCE UNLESS OTHERWISE NOTED:
FRACTIONS = ± 1/16"
ANGLES = ± 1/2°
DIAMETERS = ± 1/32"

SPECIAL PROVISION, GRAS - CONCRETE COMBINATION BR.

EM14-184, PROJECT: RUTLAND CITY, BRF 3000(16)
TOWN OF RUTLAND, RUTLAND COUNTY, VT

REV	NO.	DATE	DESCRIPTION	BY
	1	6/2/15	REVISED PER 5/12/15 MARK-UP	E.P.

REV	NO.	DATE	DESCRIPTION	BY

ELDERLEE, INC.
OAKS CORNERS, NEW YORK 14518
E-Mail: dlong@elderlee.com / epeek@elderlee.com
Tel: 315-789-6670 Fax: 315-789-6615

AISC CERTIFIED FABRICATOR

DRAWN	E.P.	12/17/14
CHECKED	D.L.	
APPROVED	M.V.	
SCALE	SCHEMATIC	
DRAWING NO.	FR L - RUTLAND-T	

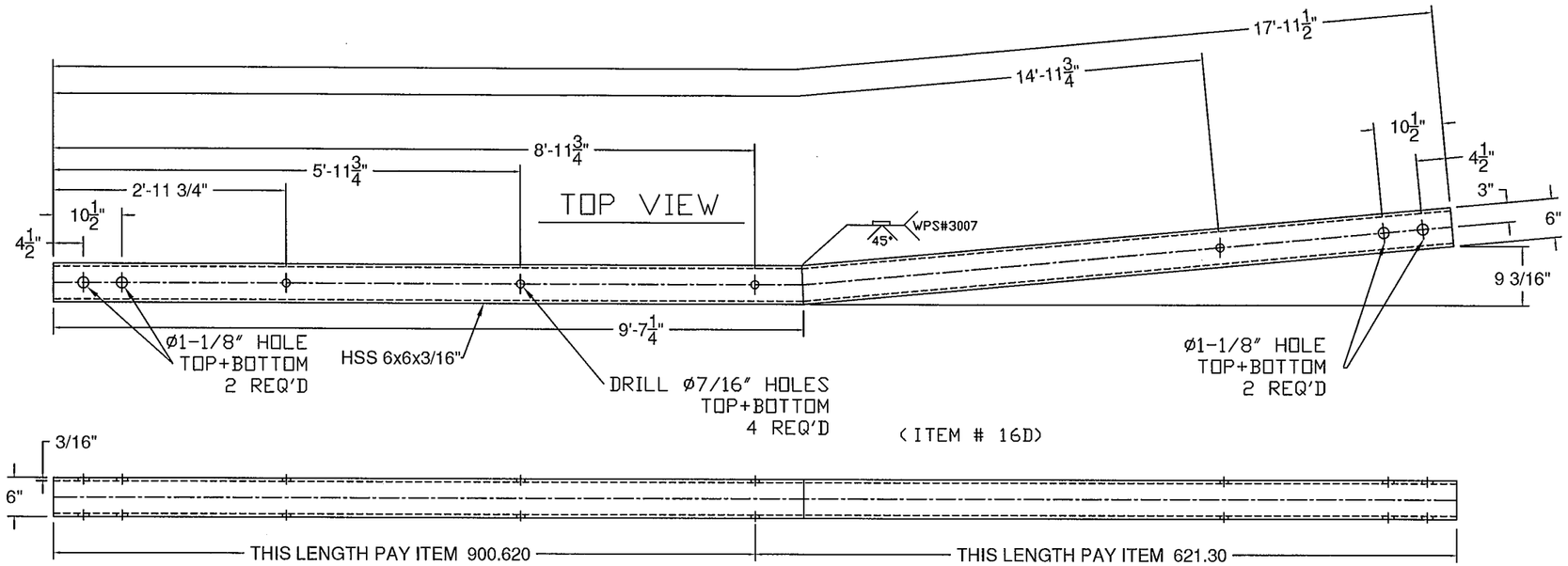

ITEM #: 900.620

SHEET 8 OF 8

STRUCTURAL STEEL TO COMPLY W/ ASTM A6

TOLERANCE UNLESS OTHERWISE NOTED:
FRACTIONS = ± 1/16"
ANGLES = ± 1/2°
DIAMETERS = ± 1/32"

SPECIAL PROVISION, GRAS - CONCRETE COMBINATION BR.

EM14-184, PROJECT: RUTLAND CITY, BRF 3000(16)
TOWN OF RUTLAND, RUTLAND COUNTY, VT

REV	NO.	DATE	DESCRIPTION	BY	REV	NO.	DATE	DESCRIPTION	BY
	1	6/2/15	REVISED PER 5/12/15 MARK-UP	E.P.					

ELDERLEE, INC.
OAKS CORNERS, NEW YORK 14518
E-Mail: dlong@elderlee.com / epeek@elderlee.com
Tel: 315-789-6670 Fax: 315-789-6615

CERTIFIED FABRICATOR

DRAWN	E.P.	12/17/14
CHECKED	D.L.	
APPROVED	M.V.	.
SCALE	SCHEMATIC	
DRAWING NO.	FR L - RUTLAND-T	

WELDING PROCEDURE SPECIFICATION

PQR ELDERLEE#3

Material Specification	A500 GR B to A572 GR 50
Welding Process	FCAW-G
Manual or Machine	SEMAUTOMATIC
Position of Welding	FLAT/HORIZONTAL
Filler Metal Specification	A5.29
Filler Metal Classification	E81T1-Ni1C-JH4
Flux	N/A
Shielding Gas	CO 2 Dew Point -40DEG F Flow Rate 50CFH
Single or Multiple Pass	SINGLE
Single or Multiple Arc	SINGLE
Welding Current	DC
Polarity	REVERSE ELECTRODE POSITIVE
Welding Progression	STRINGER
Root Treatment	PER D1.5
Preheat and Interpass Temperature	PER D1.5
Postheat Temperature	NONE
Heat Input	Min _____ Max _____

WELDING PROCEDURE

Pass no.	Electrode size	Welding Current Amperes	Welding Current Volts	Travel speed	Joint detail
1	1/16	310	25	11	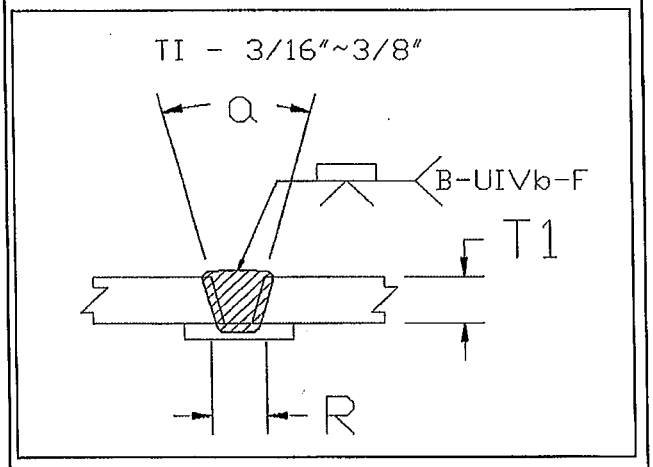
Variable	LIMITS	341 TO 269	27 TO 23	12 TO 10	

This procedure may vary due to fabrication sequence, fit-up, pass size, etc., within the limitation of variables given in Section 5.

Procedure No. 3007

Revision No. _____

Contractor Elderlee, Inc.

Authorized By RANDY SCOTT

Date 7/28/2014

WELDING PROCEDURE SPECIFICATION

PQR ELDERLEE #3

Material Specification	A709 TO A500 GR B
Welding Process	FCAW-G
Manual or Machine	SEMAUTOMATIC
Position of Welding	FLAT/HORIZONTAL
Filler Metal Specification	A5.29
Filler Metal Classification	E81T1-Ni1C-JH4
Flux	N/A
Shielding Gas	CO 2 Dew Point -40DEG F Flow Rate 50CFH
Single or Multiple Pass	SINGLE
Single or Multiple Arc	SINGLE
Welding Current	DC
Polarity	REVERSE ELECTRODE POSITIVE
Welding Progression	STRINGER
Root Treatment	D1.5
Preheat and Interpass Temperature	D1.5
Postheat Temperature	NONE
Heat Input	Min Max

WELDING PROCEDURE

Pass no.	Electrode size	Welding Current Amperes	Welding Current Volts	Travel speed	Joint detail
1	1/16	310	25	11	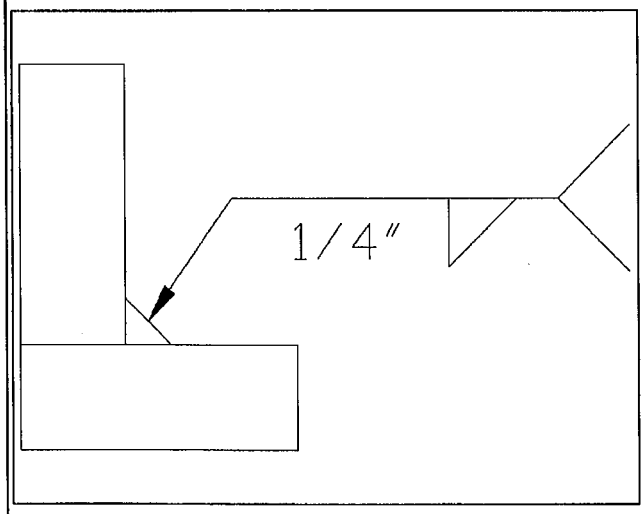
Variable	LIMITS	341 TO 269	27 TO 23	12 TO 10	

This procedure may vary due to fabrication sequence, fit-up, pass size, etc., within the limitation of variables given in Section 5.

Procedure No. 3009

Revision No.

Contractor Elderlee, Inc.

Authorized By RANDY SCOTT

Date 3/20/2014

WELDING PROCEDURE SPECIFICATION

PQR ELDERLEE #3

Material Specification	A500 TO A572 GR 50
Welding Process	FCAW-G
Manual or Machine	SEMAUTOMATIC
Position of Welding	FLAT/HORIZONTAL
Filler Metal Specification	A5.29
Filler Metal Classification	E81T1-Ni1C-JH4
Flux	N/A
Shielding Gas	CO 2 Dew Point -40DEG F Flow Rate 50CFH
Single or Multiple Pass	SINGLE
Single or Multiple Arc	SINGLE
Welding Current	DC
Polarity	REVERSE
Welding Progression	STRINGER
Root Treatment	PER D1.5
Preheat and Interpass Temperature	PER D1.5
Postheat Temperature	NONE
Heat Input	Min _____ Max _____

WELDING PROCEDURE

Pass no.	Electrode size	Welding Current Amperes	Welding Current Volts	Travel speed	Joint detail
1	1/16	310	25	11	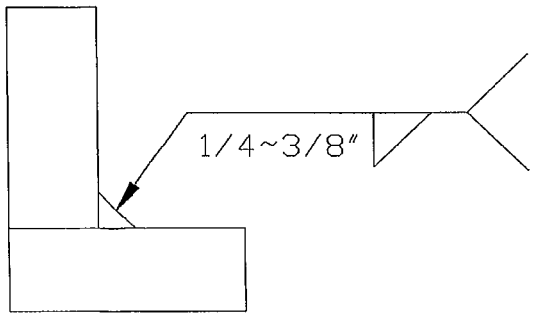
Variable	LIMITS	341 TO 269	27 TO 23	12 TO 10	

This procedure may vary due to fabrication sequence, fit-up, pass size, etc., within the limitation of variables given in Section 5.

Procedure No. 3016

Revision No. _____

Contractor Elderlee, Inc.

Authorized By RANDY SCOTT

Date 8/4/2014

WELDING PROCEDURE SPECIFICATION

PQR ELDERLEE #3

Material Specification	ASTM A572 GR. 50 TO A325
Welding Process	FCAW-G
Manual or Machine	SEMAUTOMATIC
Position of Welding	FLAT/HORIZONTAL
Filler Metal Specification	A5.29
Filler Metal Classification	E81T1-Ni1C-JH4
Flux	N/A
Shielding Gas	CO 2 Dew Point -40DEG F Flow Rate 50CFH
Single or Multiple Pass	SINGLE
Single or Multiple Arc	SINGLE
Welding Current	DC
Polarity	REVERSE ELECTRODE POSITIVE
Welding Progression	STRINGER
Root Treatment	CLEAN PER D1.5
Preheat and Interpass Temperature	PER D1.5
Postheat Temperature	NONE
Heat Input	Min _____ Max _____

WELDING PROCEDURE

Pass no.	Electrode size	Welding Current		Travel speed	Joint detail
		Amperes	Volts		
1	1/16	310	25	11	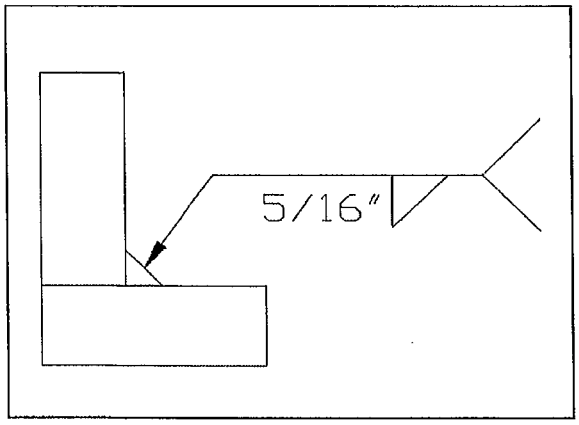
Variable	LIMITS	341 TO 269	27 TO 23	12 TO 10	

This procedure may vary due to fabrication sequence, fit-up, pass size, etc., within the limitation of variables given in Section 5.

Procedure No.	3019	Contractor	Elderlee, Inc.
Revision No.		Authorized By	RANDY SCOTT
		Date	7/28/2014

WELDING PROCEDURE SPECIFICATION

Material Specification	A572 GR 50
Welding Process	GMAW
Manual or Machine	SEMIAUTOMATIC/ROBOTIC
Position of Welding	FLAT/HORIZONTAL
Filler Metal Specification	A5.18
Filler Metal Classification	L-56 LINCOLN
Flux	N/A
Shielding Gas	90% ARGON /10% CO2 Dew Point -40DEG F Flow Rate 45CFH
Single or Multiple Pass	SINGLE
Single or Multiple Arc	SINGLE
Welding Current	DC
Polarity	REVERSE
Welding Progression	STRINGER
Root Treatment	PER D1.5
Preheat and Interpass Temperature	PER D1.5
Postheat Temperature	NONE
Heat Input	Min _____ Max _____

WELDING PROCEDURE

Pass no.	Electrode size	Welding Current Amperes	Welding Current Volts	Travel speed	Joint detail
	.045	190	22	19	
Variable	LIMITS	171 TO 209	20 TO 24	17 TO 21	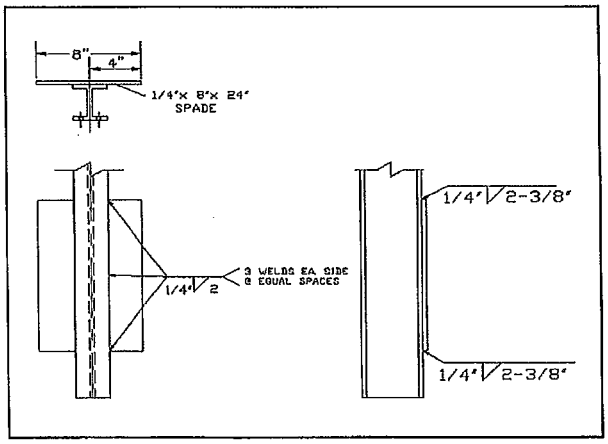

This procedure may vary due to fabrication sequence, fit-up, pass size, etc., within the limitation of variables given in Section 5.

Procedure No.	3022	Contractor	Elderlee, Inc.
Revision No.		Authorized By	RANDY SCOTT
		Date	3/20/2014

WELDING PROCEDURE SPECIFICATION

PQR ELDERLEE#1

Material Specification	A572 GRD. 50 /A992-06a
Welding Process	FCAW
Manual or Machine	SEMAUTOMATIC
Position of Welding	FLAT/HORIZONTAL
Filler Metal Specification	A5.20
Filler Metal Classification	E70 LINCOLN OUTERSHEILD
Flux	N/A
Shielding Gas	CO 2 Dew Point -40DEG F Flow Rate 50 CFM (45 TO 63 CFM)
Single or Multiple Pass	SINGLE
Single or Multiple Arc	N/A
Welding Current	DC
Polarity	DCEP
Welding Progression	STRINGER
Root Treatment	PER D1.5
Preheat and Interpass Temperature	PER D1.5
Postheat Temperature	NONE
Heat Input	Min _____ Max _____

WELDING PROCEDURE

Pass no.	Electrode size	Welding Current Amperes	Welding Current Volts	Travel speed	Joint detail
1	3/32	390	27	12	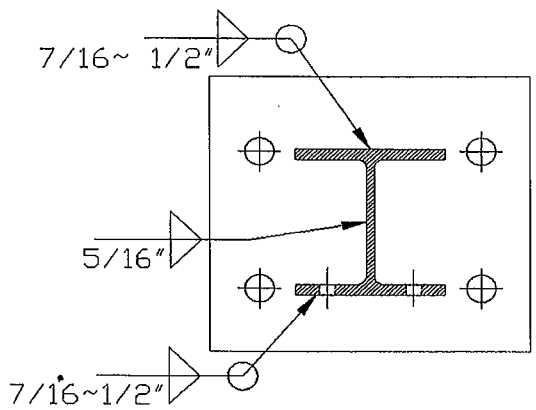
Variable	LIMITS	351 TO 429	25 TO 29	11 TO 13	

This procedure may vary due to fabrication sequence, fit-up, pass size, etc., within the limitation of variables given in Section 5.

Procedure No. 3027

Revision No. _____

Contractor Elderlee, Inc.

Authorized By RANDY SCOTT

Date 4/4/2014

WELDING PROCEDURE SPECIFICATION

PQR ELDERLEE #3

Material Specification	ASTM A500 GRADE B
Welding Process	FCAW-G
Manual or Machine	SEMAUTOMATIC
Position of Welding	FLAT
Filler Metal Specification	A5.29
Filler Metal Classification	E81T1-Ni1C-JH4
Flux	N/A
Shielding Gas	CO 2 Dew Point -40DEG F Flow Rate 50CFH
Single or Multiple Pass	SINGLE
Single or Multiple Arc	SINGLE
Welding Current	DC
Polarity	REVERSE
Welding Progression	STRINGER
Root Treatment	PER D1.5
Preheat and Interpass Temperature	PER D1.5
Postheat Temperature	NONE
Heat Input	Min Max

WELDING PROCEDURE

Pass no.	Electrode size	Welding Current Amperes	Welding Current Volts	Travel speed	Joint detail
1	1/16	310	25	11	
Variable	LIMITS	341 TO 269	27 TO 23	12 TO 10	

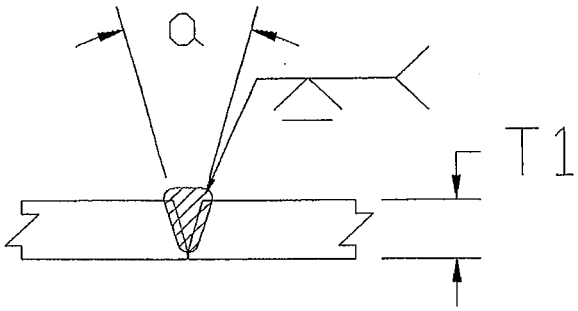

This procedure may vary due to fabrication sequence, fit-up, pass size, etc., within the limitation of variables given in Section 5.

Procedure No. 3029

Revision No.

Contractor Elderlee, Inc.

Authorized By RANDY SCOTT

Date 12/19/2014

WELDING PROCEDURE SPECIFICATION

PQR ELDERLEE #3

Material Specification	ASTM A572 GR. 50 CVN TO A500 GR B
Welding Process	FCAW-G
Manual or Machine	SEMAUTOMATIC
Position of Welding	FLAT/HORIZONTAL
Filler Metal Specification	A5.29
Filler Metal Classification	E81T1-Ni1C-JH4
Flux	N/A
Shielding Gas	CO 2 Dew Point -40DEG F Flow Rate 50CFH
Single or Multiple Pass	SINGLE
Single or Multiple Arc	SINGLE
Welding Current	DC
Polarity	REVERSE ELECTRODE POSITIVE
Welding Progression	STRINGER
Root Treatment	PER D1.5
Preheat and Interpass Temperature	PER D1.5
Postheat Temperature	NONE
Heat Input	Min _____ Max _____

WELDING PROCEDURE

Pass no.	Electrode size	Welding Current Amperes	Welding Current Volts	Travel speed	Joint detail
1	1/16	310	25	11	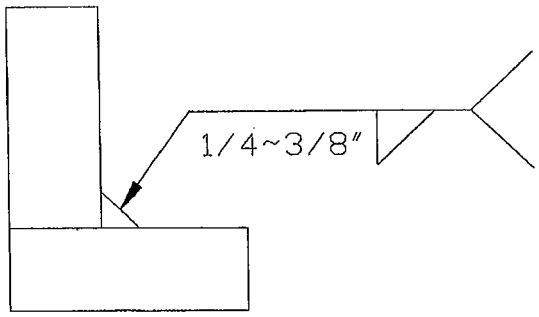
Variable	LIMITS	341 TO 269	27 TO 23	12 TO 10	

This procedure may vary due to fabrication sequence, fit-up, pass size, etc., within the limitation of variables given in Section 5.

Procedure No. 3037

Revision No. _____

Contractor Elderlee, Inc.

Authorized By RANDY SCOTT

Date 12/1/2014