Transmittal of Drawings

DATE: April 21, 2015

CSI Job #	**C22312**	**Submittal No:** **Revision No:**	C22312 - Submittal-002217 - BC/CS-BOX CULVERT W/CS WW
Attn:	Mr. Cody Marsh (cmarsh@gwtatro.com) Phone: (802) 644-8875; Fax: (802) 644-5020	**Owner:**	
Customer Name:	G W Tatro Construction Inc Jct Rtes 15 & 108, Jeffersonville, VT 05464	**Engineer:**	
Project:	VT/DOT Bridge Replacement - Roadway Improvements TH 3 FAS 0302 in RICHFORD, VT	**Project No / Contract No(s): Federal Aid No(s):**	BRF030229 /

Reason for submittal: For your files and distribution	
Enclosed herein please find submittal for:	**1 copy of shop drawing(s) and specs;1 copy of structural calculations;1 copy of Layout drawing**
LO1A-B, C1-F5	
After your review:	***For approval return 1 copy for our files***

Standard Submittal Remarks: **The following are included: 1 copy of LO1A-B (Rev 0) LAYOUT, C1-3, WW1-WW4, F1-F5 (Rev 0) SHOP, Structural Calculations, MX-FA5000SC30, Bolt Pocket Former, Closed Cell Gasket JS-00002 - 06-15-2012, Dayton-Richmond DBS, Dayton-Richmond DI, F41-WINGWALL INSERT, P93 - P94 lift inserts - FL119, Silane-Siloxane CT-00005, Utility Anchors - Dayton**

Revision Remarks:

Respectfully submitted,
Concrete Systems, Inc.

Stivale Saavedra
(ssaavedra@csigroup.com), Extn: 471
Engineering Assistant

Vermont Agency of Transportation
RECEIVED
Arch Submittal CSI 4_24_15_rejected.pdf
CK'D BY FDB OK'D BY HIS
April 24, 2015
RESUBMIT YES Rejected
BY Carolyn Carlson DATE 5/6/2015

9 Commercial Street, Hudson, New Hampshire 03051 Phone (603) 889-4163
Fax Number: Precast Sales (603) 889-0039
Fax Number: Shipping, Manhole Design and Engineering (603) 889-2417
CSI Group Web Site: www.csigroup.com

Drafter: Ray Yeager, AutoCAD Technician (ryeager@csigroup.com), 800-342-3374, Ext 472 - Prepared by: SSaavedr

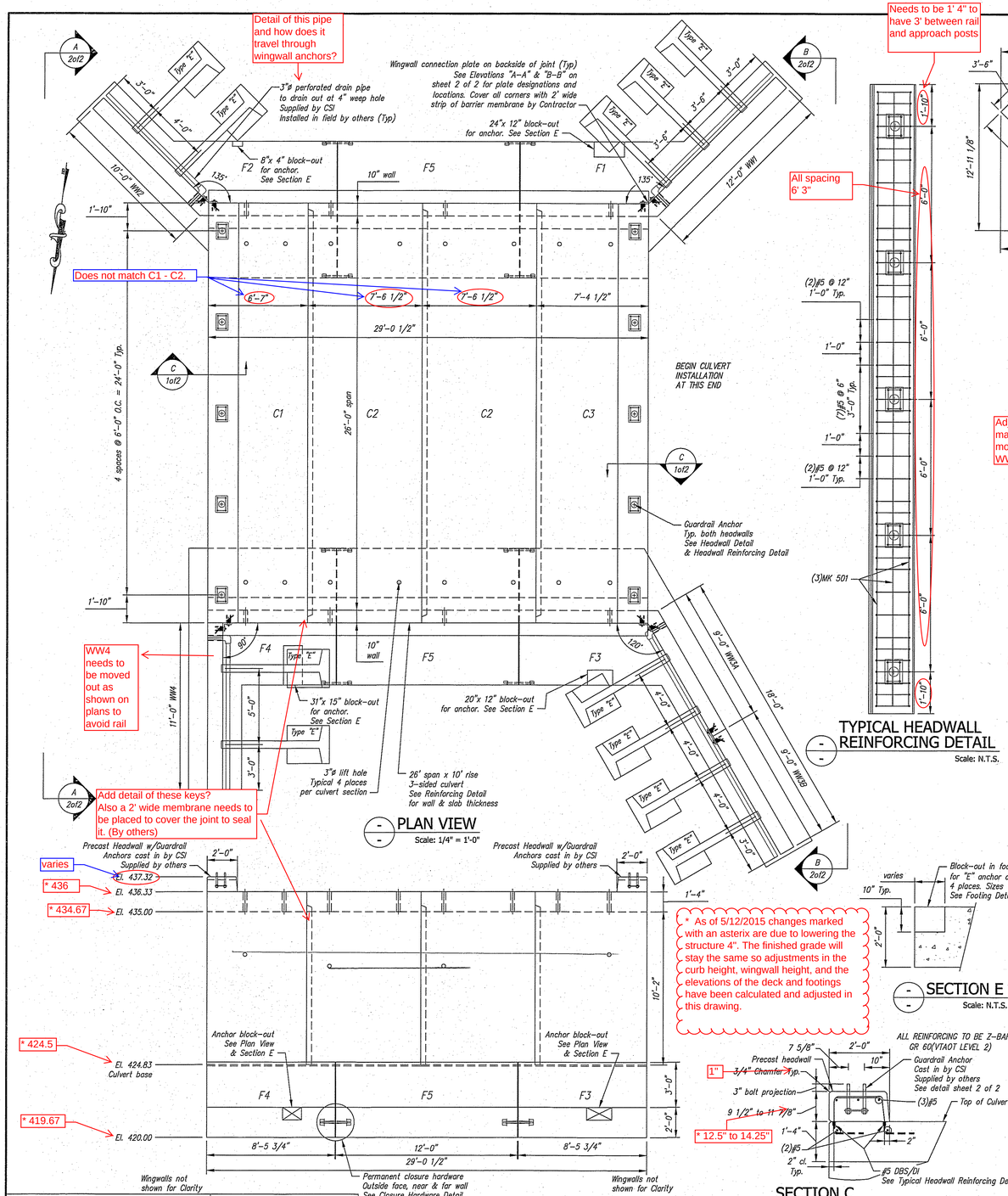

PLAN VIEW
Scale: 1/4" = 1'-0"

ELEVATION
Scale: 1/4" = 1'-0"

TYPICAL HEADWALL REINFORCING DETAIL
Scale: N.T.S.

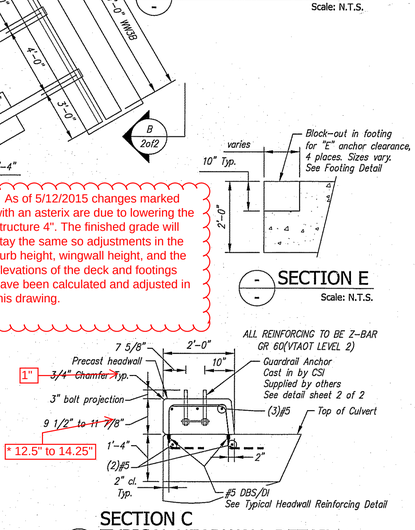

SECTION E
Scale: N.T.S.

SECTION C
TYPICAL HEADWALL DETAIL
Scale: N.T.S.

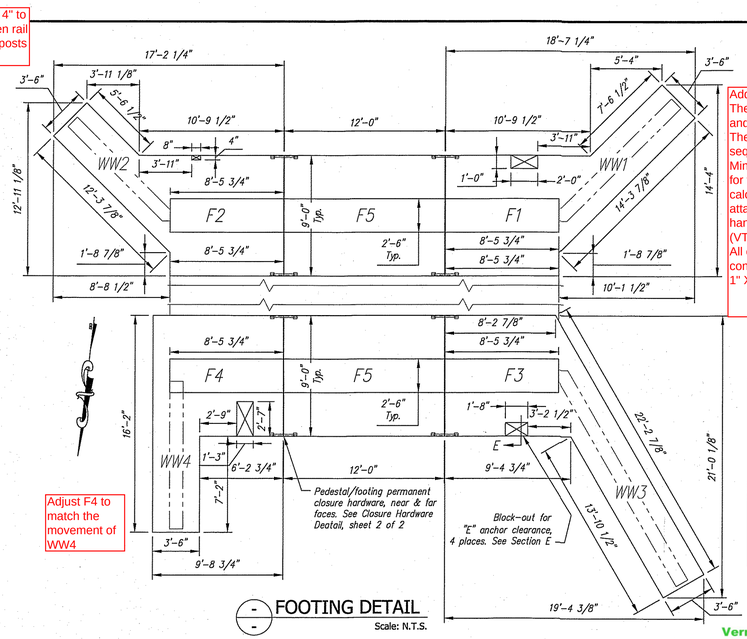

FOOTING DETAIL
Scale: N.T.S.

Add: The type of surface finish and how it will be obtained. The curing method, detailing sequence and duration. Minimum required strength for form removal. Design calculations of the lifting attachments. Transportation, handling and storage details. (VTRANS spec 540.04) All exposed edges of concrete shall be chamfered 1" X 1"

GENERAL NOTES:
1. Reference Standards:
   AASHTO "LRFD Bridge Design Specifications"
   ASTM C1577
2. Design Parameters:
   Live load: HL-93
   Earth Cover: 0.5' to 1.0'
   Concrete: Design strength f'c = 5000 psi
   Unit weight = 150 pcf
   Reinforcing: Pedestal/Footing – ASTM A615 (rebar) GR 60, Black
   Culvert/Headwall/Wingwall – Z-Bar(rebar), GR 60(VTAOT Level II)
   Soil: Unit weight = 140 pcf
   Minimum lateral pressure coefficient .25
   Maximum lateral pressure coefficient .50
   Cover to reinforcing: 2" Top of top slab
   1 1/2" elsewhere u.n.o.
3. Dimensions include a joint gap. Actual culvert piece length is ½" shorter (i.e. C2 = 7'-6").
4. DBS are Dowel Bar Splicers and DI are Dowel Ins. Both are supplied by CSI. DI's are to be installed and cut/bent in the field by others as required.
5. Headwall design taken from contract drawing S-360A.
6. Water repellant by CSI on all exposed faces of culvert, headwalls, and wingwalls to 1' inside culvert ends. Water repellant to be Silane-Siloxane.
7. Provide engineer a minimum fourteen (14) days notice prior to the start of fabrication and a detailed casting schedule.

same as level I?

CULVERT PIECE SCHEDULE (MX-FA5000SC30)

MARK	QTY	LENGTH	YDS	WEIGHT	
C1	1	6.54 '	15.40	31.19	TONS
C2	2	7.50 '	15.20	30.78	TONS
C3	1	7.38 '	16.50	33.41	TONS
WW1	1	12.00 '	7.73	15.65	TONS
WW2	1	10.00 '	6.39	12.94	TONS
WW3A	1	9.00 '	6.04	12.23	TONS
WW3B	1	9.00 '	5.27	10.67	TONS
WW4	1	11.00 '	7.06	14.30	TONS
F1	1	18.58 '	11.37	23.02	TONS
F2	1	17.17 '	10.85	21.97	TONS
F3	1	21.00 '	12.82	25.96	TONS
F4	1	16.17 '	10.60	21.47	TONS
F5	2	12.00 '	11.19	22.66	TONS

Vermont Agency of Transportation
RECEIVED
CK'D BY FDB OK'D BY HIS
April 24, 2015
RESUBMIT YES Rejected
BY Carolyn Carlson DATE 5/6/2015

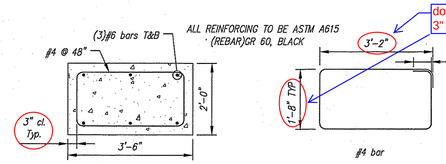

WINGWALL FOOTING REINFORCING DETAIL
Scale: N.T.S.

BENDING SCHEDULE
Scale: N.T.S.

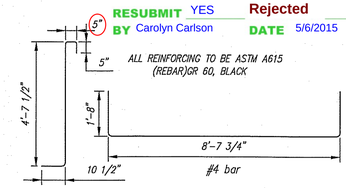

BENDING SCHEDULE
Scale: N.T.S.

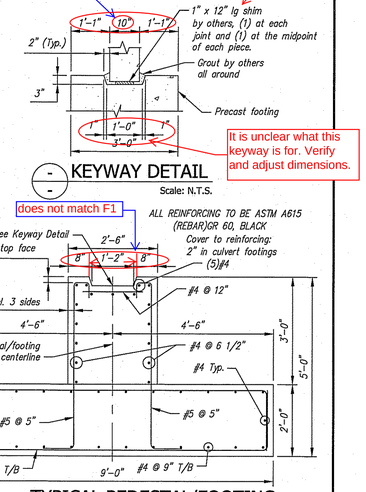

KEYWAY DETAIL
Scale: N.T.S.

TYPICAL PEDESTAL/FOOTING REINFORCING DETAIL
Scale: N.T.S.

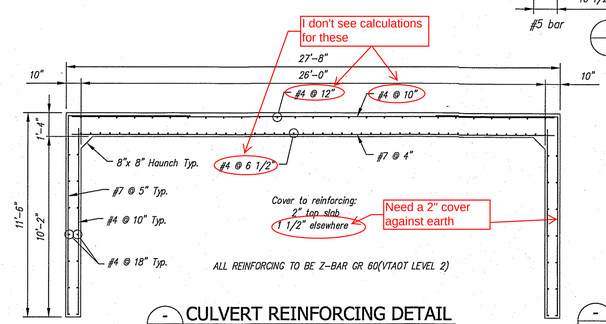

CULVERT REINFORCING DETAIL
Scale: 3/8" = 1'-0"

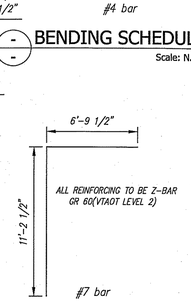

BENDING SCHEDULE
Scale: N.T.S.

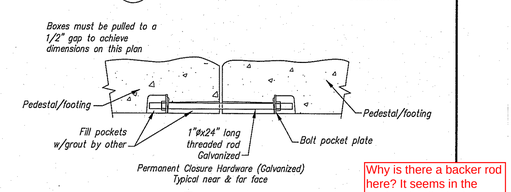

SECTION D-D
Scale: N.T.S.

Why is there a backer rod here? It seems in the footing details the key and grout are run from top of pedestal to bottom of footing and all across the footing

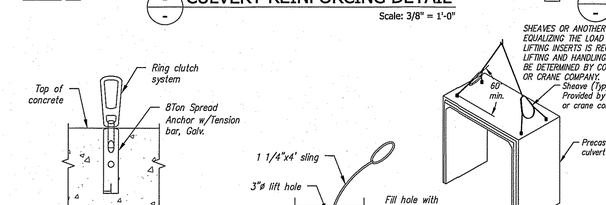

FOOTING LIFTING HARDWARE DETAIL
Scale: N.T.S.

CULVERT SECTION LIFTING DETAIL
Scale: N.T.S.

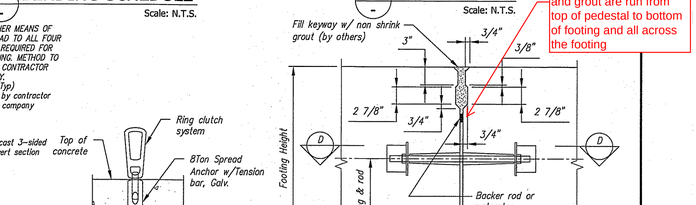

CLOSURE HARDWARE DETAIL
Scale: N.T.S.

Contractor is to verify that all information shown on drawings has been thoroughly checked, complies with the contract documents and is adequate to meet the field conditions. Some dimensions and details may differ slightly from contract drawings to accommodate the manufacturing or design process. Approval of this drawing indicates that any deviation from the contract documents has been reviewed and found to be acceptable. Production will not commence until receipt of signed, approved shop drawings.

This drawing contains information proprietary to CONCRETE SYSTEMS, INC. This drawing is disclosed with the understanding that it will be retained in confidence and its use limited solely to the purpose for which it is disclosed. It is understood that no reproduction of this drawing is authorized without permission from CONCRETE SYSTEMS, INC. and that it will be returned to CONCRETE SYSTEMS, INC. upon request.

STATE OF VERMONT CHRISTOPHER M. WICK NO. 77026 Structural LICENSED PROFESSIONAL ENGINEER 4/21/15
Stamp for structural design only

Rev.	Date	DESCRIPTION	By
7			
6			
5			
4			
3			
2			
1			

REVISIONS

This drawing is based upon information provided from the following documents and/or sources:
Engineer: STATE OF VT/AOT PROGRAM DEVELOPMENT
Project No: ----
Drawings: STATE OF VT/AOT PROPOSED IMPROVEMENT BRIDGE PROJECT, TOWN OF RICHFORD SHEETS 1,2,4,22,23,24 OF 36
Specifications: STANDARD SPECIFICATIONS FOR CONSTRUCTION DATED 2011
Other Sources: ----

CSI Concrete Systems Inc.
9 Commercial St., Hudson, NH,03051
Phone 603-889-4163
Fax 603-889-2417

STATE AGENCY VTrans

Drawn By R. YEAGER	Date 31MAR2015	
Reviewed By B. KOLAWOLE	Date	
Approved By	Date	

G.W. TATRO CONSTRUCTION, INC.
VT/AOT BRIDGE REPLACEMENT– ROAD IMPROVEMENT
RICHFORD, VT.

D — 26' SPAN X 10' RISE 3-SIDED CULVERT — REV 0
Drawing No. C22312-L01A
Quantity: 1 | Project No: BRF030229 | SHEET 1 OF 2

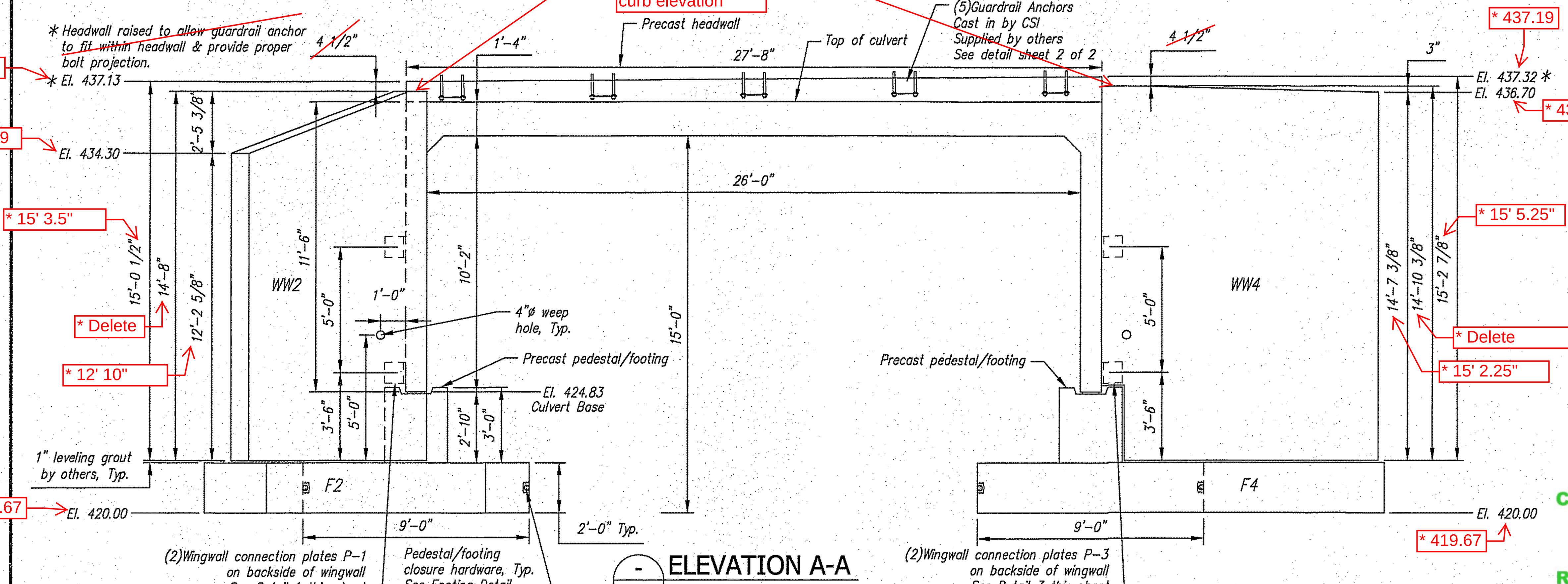

ELEVATION A-A
Scale: 1/4" = 1'-0"

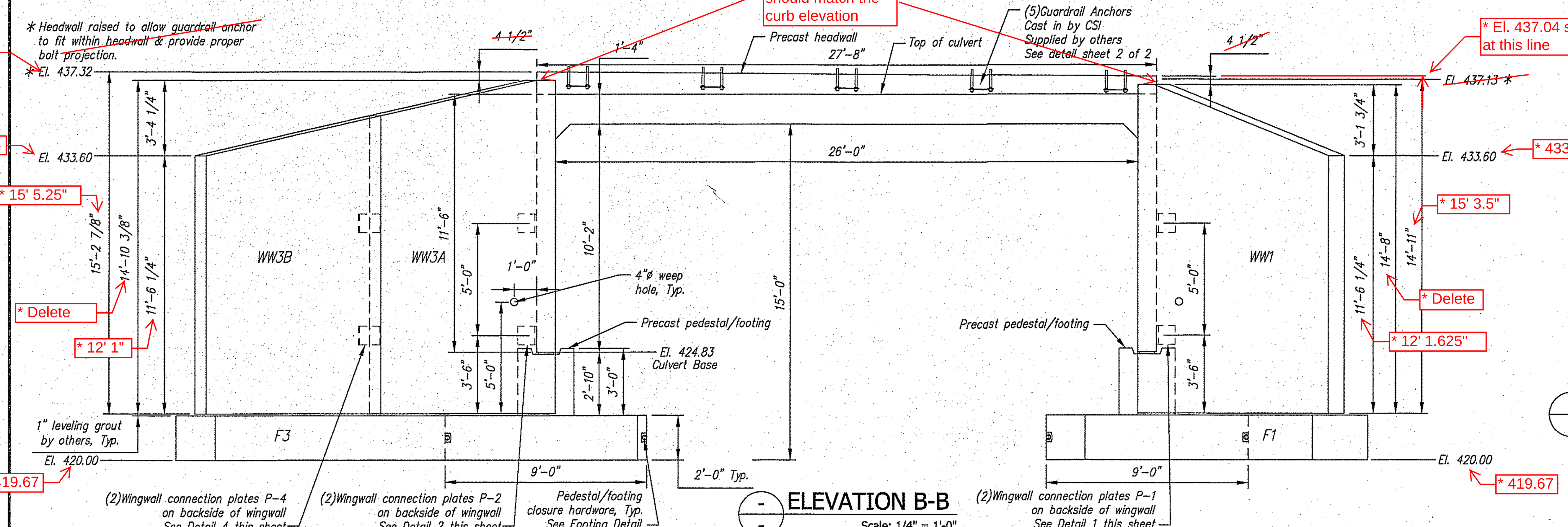

ELEVATION B-B
Scale: 1/4" = 1'-0"

WINGWALL GENERAL NOTES:

1. Reference standard:
   AASHTO LRFD Specifications
2. Design Parameters:
   Nominal Bearing Resistance: 10 ksf (Footing width > 6ft.)
   Earth Cover: 1.0'±
   Concrete: Design strength f'c = 4000 psi
   Unit weight = 150 pcf
   Reinforcing: Z-BAR(rebar), GR 60(VTAOT Level II)
   Soil: Unit weight = 125 pcf
   Minimum lateral pressure coefficient .25
   Maximum lateral pressure coefficient .50
   Cover to reinforcing: 3" u.n.o.
3. The wingwalls have been designed for general site conditions. The project engineer shall be responsible for the structure's suitability to the existing site conditions and for the hydraulic evaluation, including scour and confirmation of soil conditions.
4. Prior to construction, contractor must verify all elevations shown through the engineer.

5000psi?

Vermont Agency of Transportation
RECEIVED
CK'D BY FDB OK'D BY HIS
April 24, 2015
RESUBMIT YES Rejected
BY Carlson Carlson DATE 5/6/2015

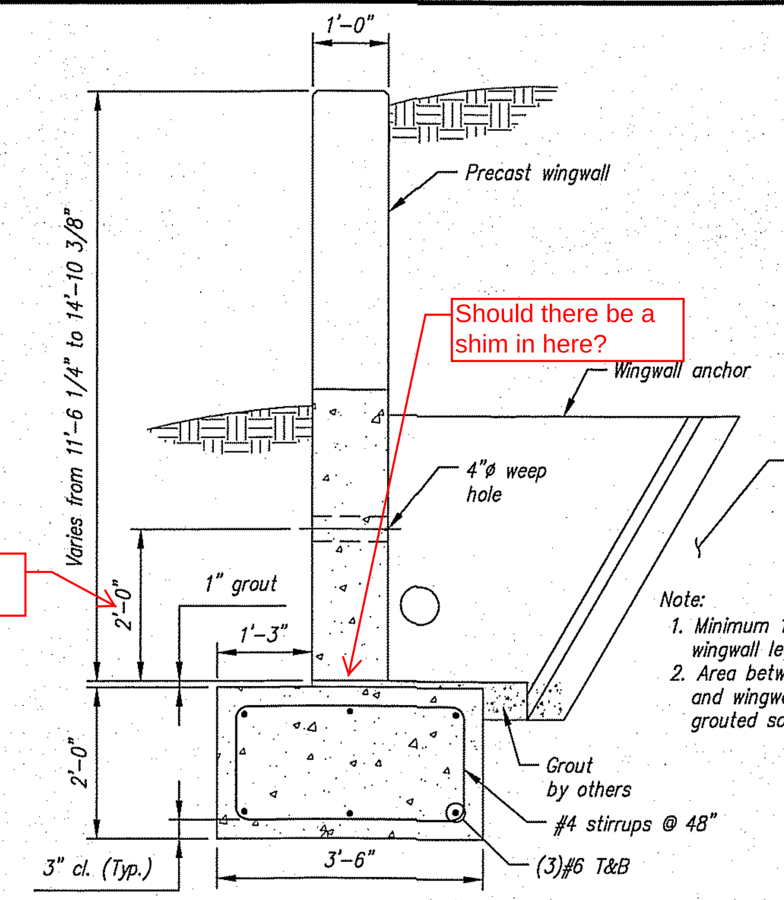

TYPICAL WINGWALL DETAILS
Scale: N.T.S.

BACKFILL DESCRIPTION							
Group Classification	A-1		A-3	A-2			
	A-1-a	A-1-b		A-2-4	A-2-5	A-2-6	A-2-7
Sieve Analysis, Percent Passing							
No. 10	50 max.						
No. 40	30 max.	50 max.	51 min.				
No. 200	15 max.	25 max.	10 max.	35 max.	35 max.	35 max.	35 max.
Characteristics of Fraction Passing No. 40							
Liquid Limit				40 max.	41 min.	40 max.	41 min.
Plasticity Index	6 max.		N.P.	10 max.	10 max.	11 min.	11 min.
Usual Types of Significant Constituent Materials	Stone Fragments, Gravel & Sand		Fine Sand	Silty or Clayey Gravel and Sand			
General Rating as Subgrade	Excellent to Good						

NOTES
1. BACKFILLING OPERATIONS WITHIN THE C.B.Z. SHALL BE PERFORMED IN LIFTS OF 8" OR LESS (LOOSE DEPTH).
2. MAXIMUM DRY DENSITY SHALL BE DETERMINED BY AASHTO T-99 OR OTHER APPROVED METHODS.
3. BACKFILL SHALL BE COMPACTED IN LAYERS UNTIL THE DENSITY IS NOT LESS THAN 95% OF THE MAXIMUM DRY DENSITY.

Will this backfilling description be used? I do not see anything specific on our plans

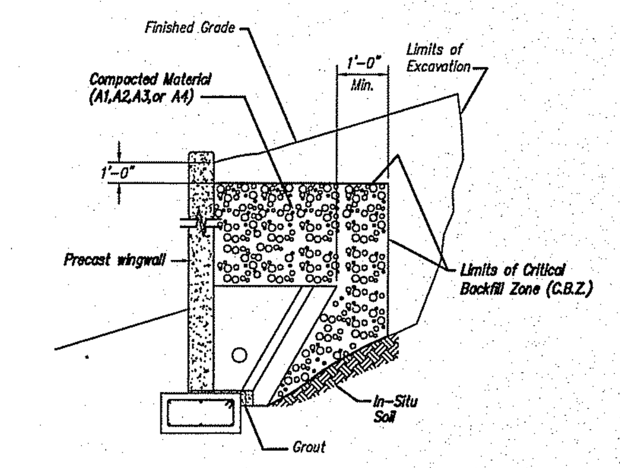

WINGWALL BACKFILL REQUIREMENTS

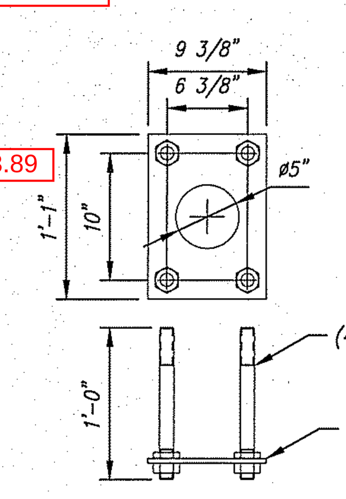

GUARDRAIL ANCHOR DETAIL
Scale: N.T.S.

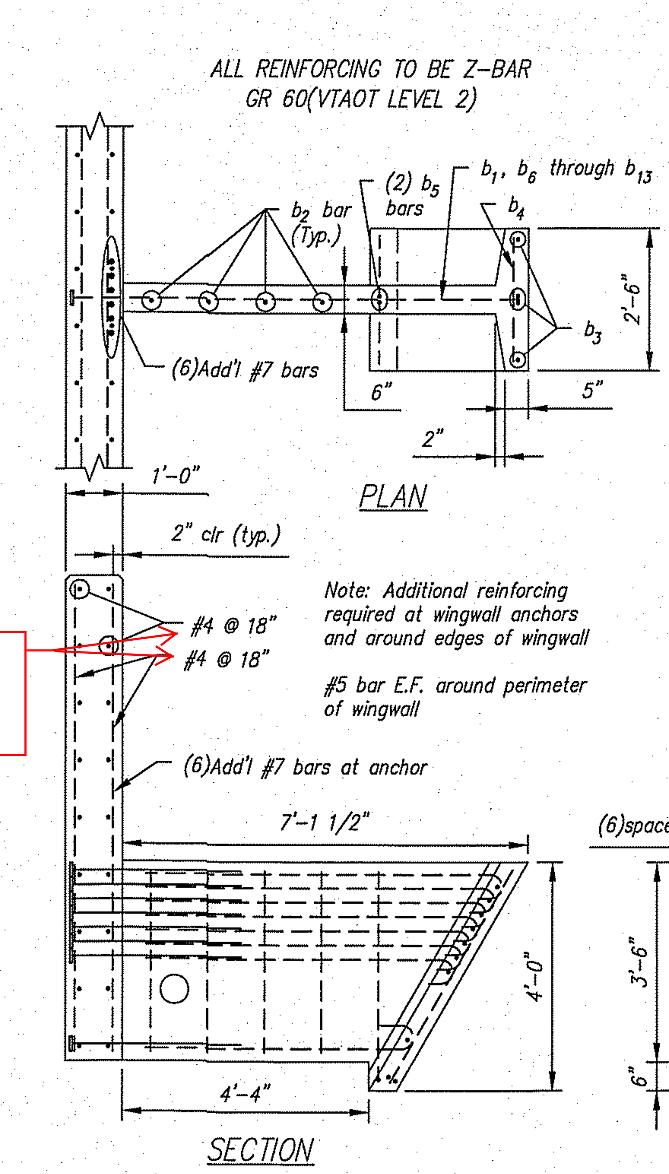

BAR LIST					
MARK	QTY.	SIZE	a	TYPE	LENGTH
b_1	8	#6	3'-0"	3	——
b_2	4	#5	——	Str.	3'-2"
b_3	4	#5	——	Str.	4'-3"
b_4	11	#5	——	Str.	2'-2"
b_5	2	#5	3'-8"	2	——
b_6	1	#5	4'-9"	1	——
b_7	1	#5	5'-4"	1	——
b_8	1	#5	5'-6"	1	——
b_9	1	#5	5'-8"	1	——
b_{10}	1	#5	5'-10"	1	——
b_{11}	1	#5	6'-0"	1	——
b_{12}	1	#5	6'-1"	1	——
b_{13}	1	#5	6'-3"	1	——

Note: "Str." denotes straight bar.
Standard clearance = 2"

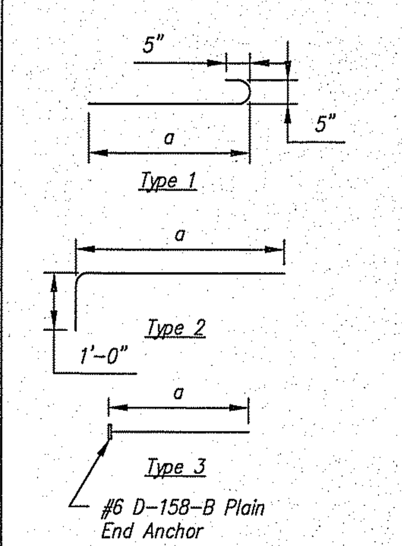

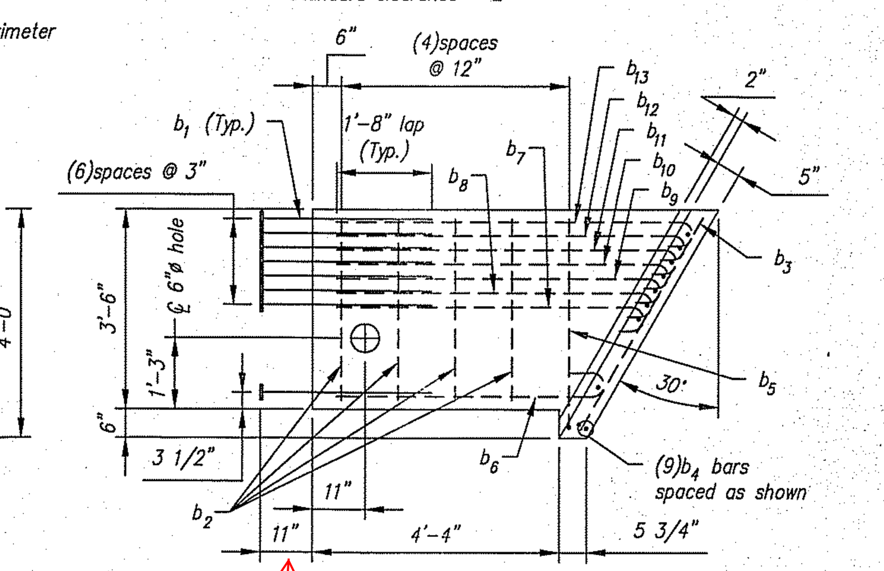

PRECAST ANCHOR TYPE E

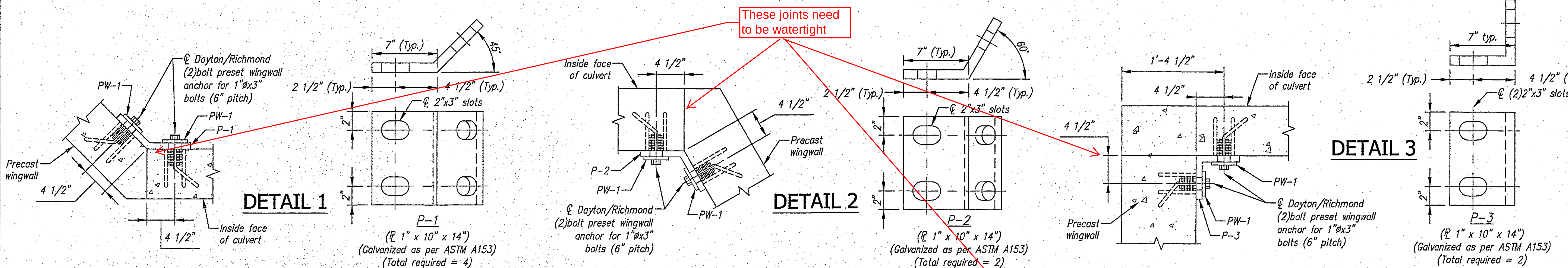

WINGWALL CONNECTION PLATE DETAILS
Scale: N.T.S.

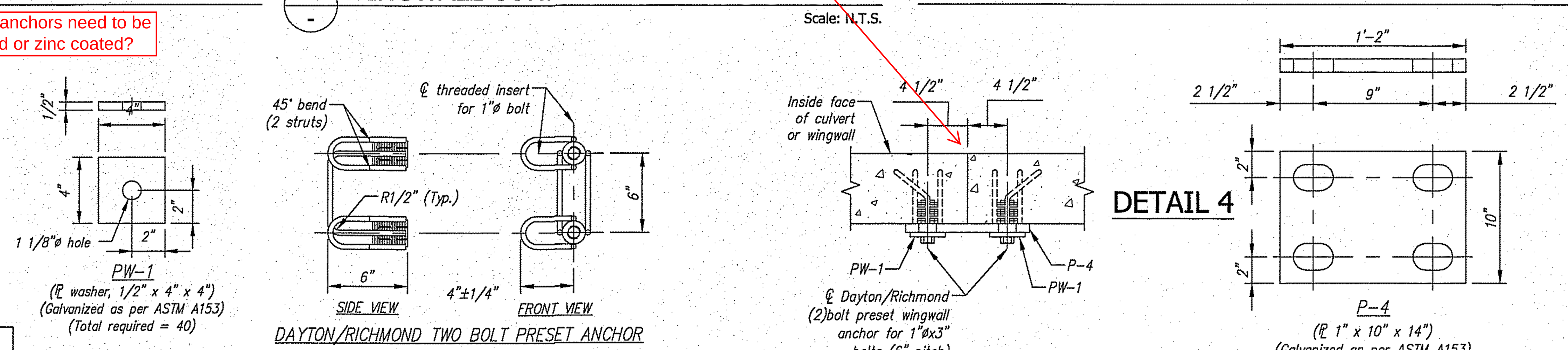

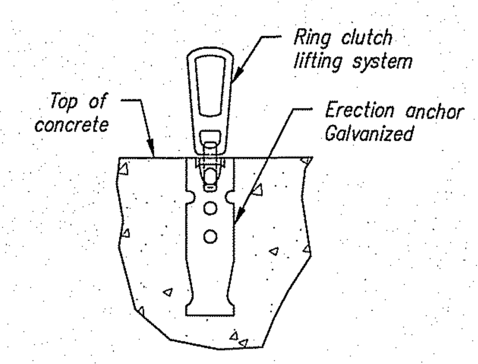

WINGWALL LIFTING DETAIL
Scale: N.T.S.

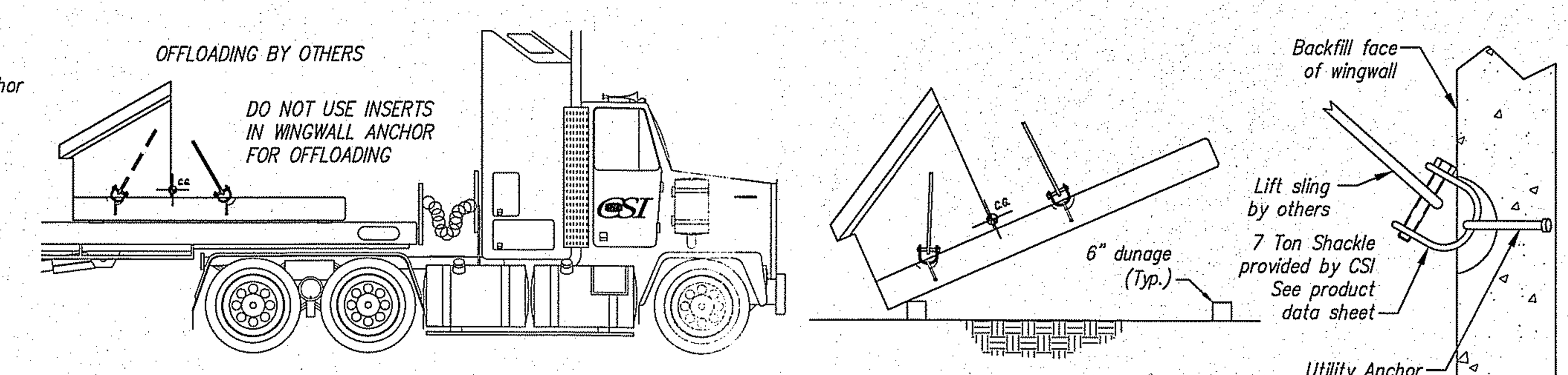

WINGWALL OFFLOADING & TRIPPING DETAIL
Scale: N.T.S.

Contractor is to verify that all information shown on drawings has been thoroughly checked, complies with the contract documents and is adequate to meet the field conditions. Some dimensions and details may differ slightly from contract drawings to accommodate the manufacturing or design process. Approval of this drawing indicates that any deviation from the contract documents has been reviewed and found to be acceptable. Production will not commence until receipt of signed, approved shop drawings.

This drawing contains information proprietary to CONCRETE SYSTEMS, INC. This drawing is disclosed with the understanding that it will be retained in confidence and its use limited solely to the project for which it is disclosed. It is understood that no reproduction of this drawing is authorized without permission from CONCRETE SYSTEMS, INC. and that it will be returned to CONCRETE SYSTEMS, INC. upon request.

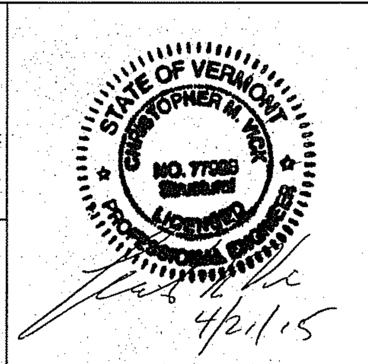

Stamp for structural design only

Rev.	Date	DESCRIPTION	By
7			
6			
5			
4			
3			
2			
1			

REVISIONS

This drawing is based upon information provided from the following documents and/or sources:
Engineer: STATE OF VT/AOT PROGRAM DEVELOPMENT
Project No: ----
Drawings: STATE OF VT/AOT PROPOSED IMPROVEMENT BRIDGE PROJECT, TOWN OF RICHFORD SHEETS 1,2,4,22,23,24 OF 36
Specifications: STANDARD SPECIFICATIONS FOR CONSTRUCTION DATED 2011
Other Sources: ----

Concrete Systems Inc.
9 Commercial St., Hudson, NH,03051
Phone 603-889-4163
Fax 603-889-2417

STATE AGENCY
VTrans

Drawn By R. YEAGER Date 31MAR2015
Reviewed By B. KOLAWOLE Date
Approved By Date

G.W. TATRO CONSTRUCTION, INC.
VT/AOT BRIDGE REPLACEMENT– ROAD IMPROVEMENT
RICHFORD, VT.

D | 26' SPAN X 10' RISE 3-SIDED CULVERT | REV 0
Drawing No. C22312-L01B
Quantity: 1 | Project No: BRF030229 | SHEET 2 OF 2

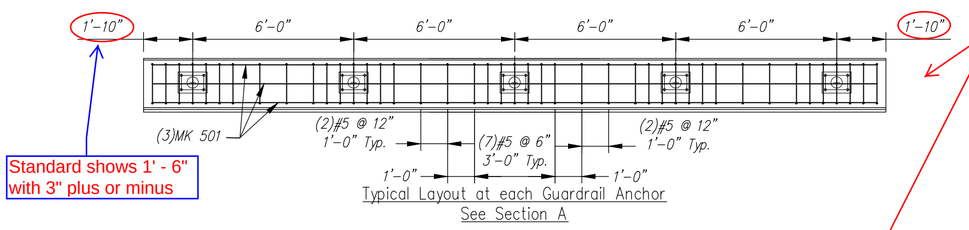

Standard shows 1' - 6" with 3" plus or minus

Adjust post spacing and rebar spacing

PLAN VIEW
HEADWALL REINFORCING DETAIL

Scale: 1/4" = 1'-0"

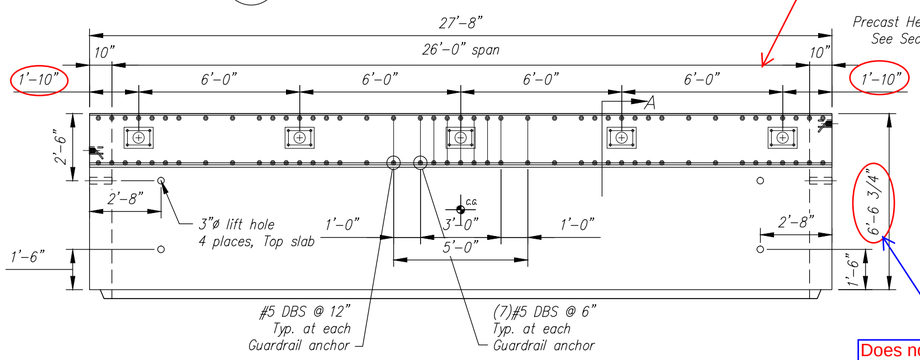

Does not match sheet 1

PLAN VIEW

Scale: 1/4" = 1'-0"

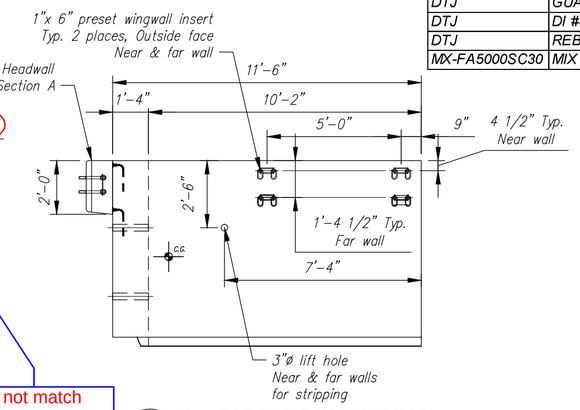

R. SIDE ELEVATION

Scale: 1/4" = 1'-0"

not seeing this on the APL

QUANTITY = 1
WEIGHT = 31.19 TONS

C1 - BILL OF MATERIALS / EMBEDS				
CSI ID#	DESCRIPTION	QTY	UM	COMMENTS
CT-00005	CONSOLIDECK SALTGUARD (SILANE SILOXANE)	1.30	GA	
EM-0005A	1" X 6 " PRESET WING INSERTS	4	EA	
EM-00033	3" FOAM CORE PVC	7	FT	
DTJ	DBSAE #5 X 18" Z-BAR GR 60 VTAOT LEVEL II	86	EA	DOWEL BAR SPLICER
DTJ	REBAR #4 Z-BAR GR 60 VTAOT LEVEL II	696	LB	
DTJ	REBAR #5 Z-BAR GR 60 VTAOT LEVEL II	57	LB	
DTJ	REBAR #7 Z-BAR GR 60 VTAOT LEVEL II	2281	LB	
MX-FA5000SC30	MIX DESIGN - FLY ASH 5000 SELF CONSOLIDATING	13.62	CY	
C1 HEADWALL - BILL OF MATERIALS / EMBEDS				
DTJ	GUARDRAIL ANCHOR	5	EA	SUPPLIED BY OTHERS
DTJ	DI #5 X 18" Z-BAR GR 60 VTAOT LEVEL II	86	EA	DOWEL IN
DTJ	REBAR #5 Z-BAR GR 60 VTAOT LEVEL II	86	LB	
MX-FA5000SC30	MIX DESIGN - FLY ASH 5000 SELF CONSOLIDATING	1.78	CY	

C1 Culvert Rebar Schedule			
MK		QTY	LENGTH
401	#4	16	10 '- 6 "
402	#4	8	27 '- 0 "
403	#4	104	6 '- 4 "
501	#5	2	27 '- 4 "
701	#7	32	18 '- 0 "
702	#7	20	27 '- 0 "

C1 HW Rebar Schedule			
MK		QTY	LENGTH
501	#5	3	27 '- 4 "

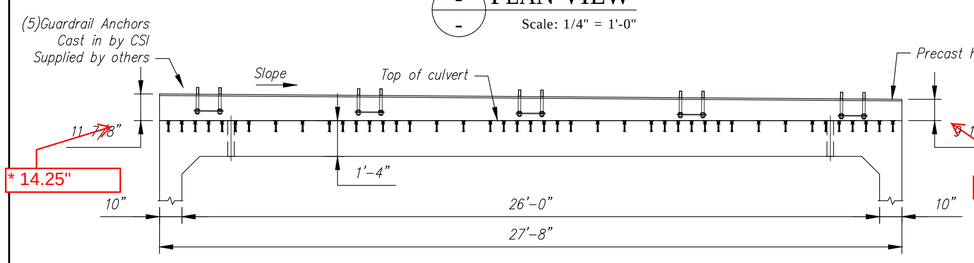

PARTIAL ELEVATION

Scale: 1/4" = 1'-0"

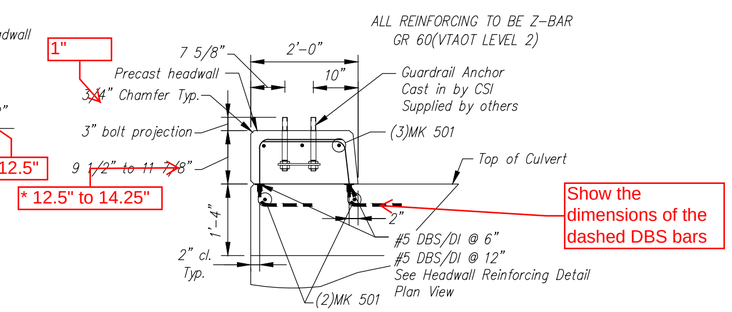

Show the dimensions of the dashed DBS bars

SECTION A

ALL REINFORCING TO BE Z-BAR GR 60(VTAOT LEVEL 2)

Scale: N.T.S.

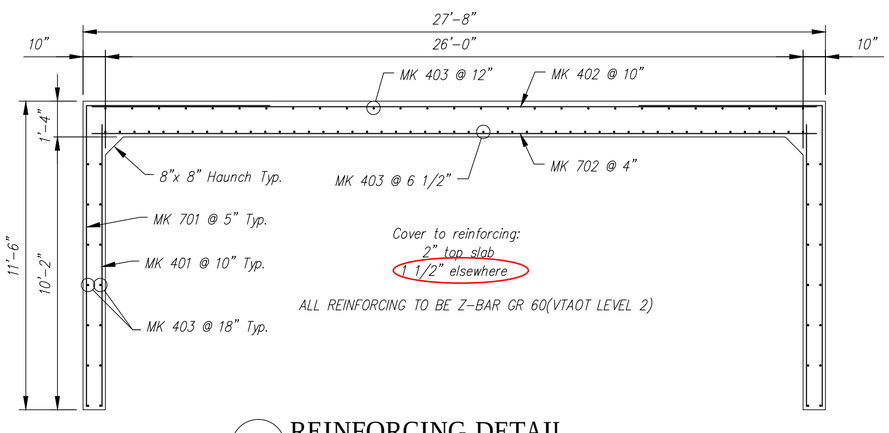

REINFORCING DETAIL

Scale: N.T.S.

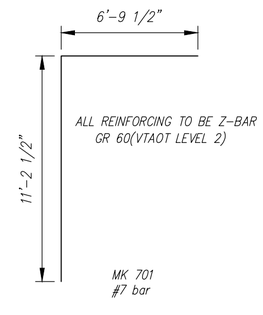

BENDING SCHEDULE

Scale: N.T.S.

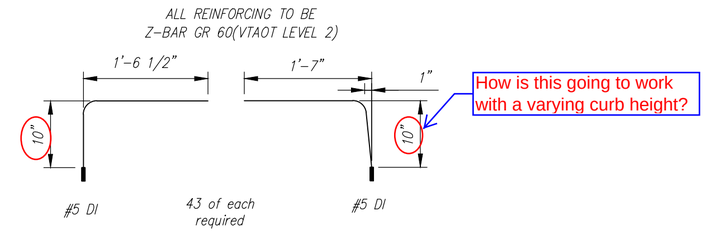

How is this going to work with a varying curb height?

HEADWALL BENDING SCHEDULE

Scale: N.T.S.

Vermont Agency of Transportation
RECEIVED
Arch Submittal CSI 4_24_15_rejected.pdf
CK'D BY FDB OK'D BY HIS
April 24, 2015
RESUBMIT YES Rejected
BY Carolyn Carlson DATE 5/6/2015

Rev.	Date	DESCRIPTION REVISIONS	By
1			
2			
3			
4			
5			
6			
7			
8			
9			
10			

Contractor is to verify that all information shown on drawings has been thoroughly checked, complies with the contract documents and is adequate to meet the field conditions. Some dimensions and details may differ slightly from contract drawings to accommodate the manufacturing or design process. Approval of this drawing indicates that any deviation from the contract documents has been reviewed and found to be acceptable. Production will not commence until receipt of signed, approved shop drawings.

This drawing contains information proprietary to CONCRETE SYSTEMS, INC. This drawing is disclosed with the understanding that it will be retained in confidence and its use limited solely to the purpose for which it is disclosed. It is understood that no reproduction of this drawing is authorized without permission from CONCRETE SYSTEMS, INC. and that it will be returned to CONCRETE SYSTEMS, INC. upon request.

Stamp for structural design only

This drawing is based upon information provided from the following documents and/or sources:

Engineer: STATE OF VT/AOT PROGRAM DEVELOPMENT
Project No: ----
Drawings: STATE OF VT/AOT PROPOSED IMPROVEMENT BRIDGE PROJECT, TOWN OF RICHFORD SHEETS 1,2,4,22,23,24 OF 36
Specifications: STANDARD SPECIFICATIONS FOR CONSTRUCTION DATED 2011
Other: ----

CSI
Concrete Systems Inc.
9 Commercial St., Hudson, NH,03051
Phone 603-889-4163
Fax 603-889-2417

STATE AGENCY
VTrans Working to Get You There

Drawn By R. YEAGER	Date 16APR2015
Reviewed By B. KOLAWOLE	Date
Approved By	Date

G.W. TATRO CONSTRUCTION, INC.
VT/AOT BRIDGE REPLACEMENT– ROAD IMPROVEMENT
RICHFORD, VT.

C — SHOP DRAWING C1 — Drawing No. C22312-C1 — REV 0

Quantity: 1 — Project No: BRF030229 — SHEET 1 OF 13

QUANTITY = 2
WEIGHT = 30.78 TONS

C2 - BILL OF MATERIALS / EMBEDS				
CSI ID#	DESCRIPTION	QTY	UM	COMMENTS
EM-00033	3" FOAM CORE PVC	7	FT	
JS-00002	1"X1"CLOSED NEOP GASKET	49	FT	AROUND BELL
DTJ	REBAR #4 Z-BAR GR 60 VTAOT LEVEL II	824	LB	
DTJ	REBAR #7 Z-BAR GR 60 VTAOT LEVEL II	2667	LB	
MX-FA5000SC30	MIX DESIGN - FLY ASH 5000 SELF CONSOLIDATING	15.2	CY	

C2 Culvert Rebar Schedule			
MK		QTY	LENGTH
401	#4	20	10 '- 6 "
402	#4	10	27 '- 0 "
403	#4	104	7 '- 3 "
701	#7	38	18 '- 0 "
702	#7	23	27 '- 0 "

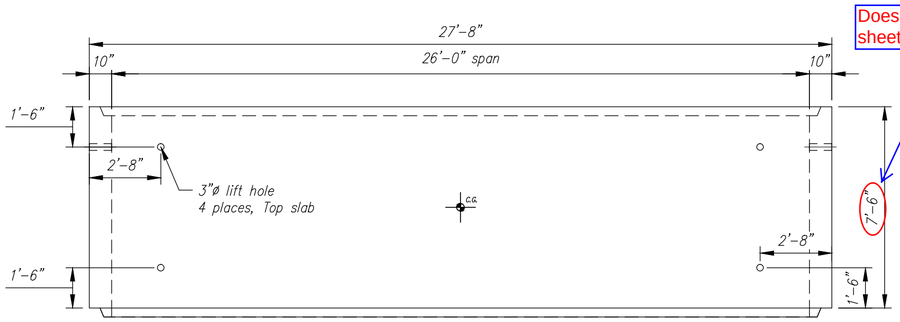

Does not match sheet 1

- / - PLAN VIEW
Scale: 1/4" = 1'-0"

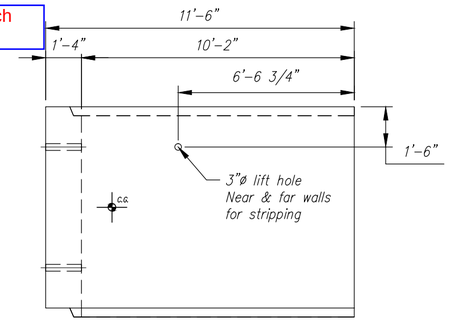

- / - R. SIDE ELEVATION
Scale: 1/4" = 1'-0"

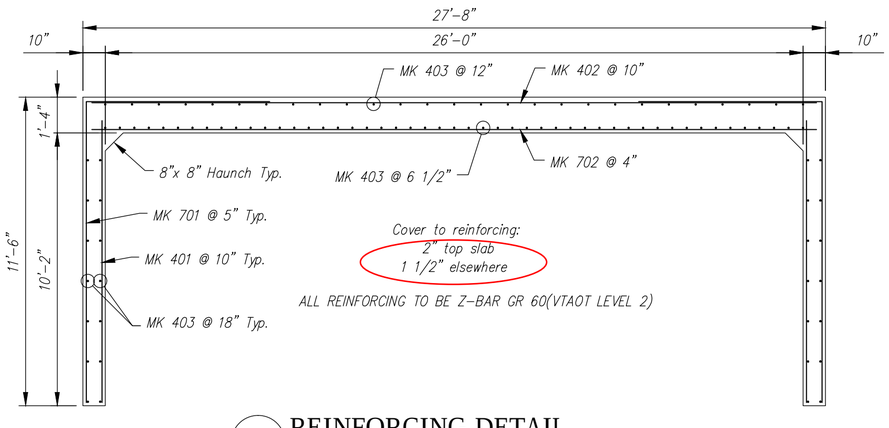

- / - REINFORCING DETAIL
Scale: N.T.S.

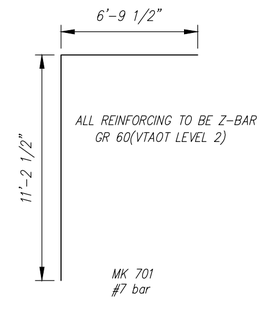

- / - BENDING SCHEDULE
Scale: N.T.S.

Vermont Agency of Transportation
RECEIVED
Arch Submittal CSI 4_24_15_rejected.pdf
CK'D BY FDB OK'D BY HIS
April 24, 2015
RESUBMIT YES Rejected
BY Carolyn Carlson DATE 5/6/2015

Rev.	Date	DESCRIPTION REVISIONS	By
1			
2			
3			
4			
5			
6			
7			
8			
9			
10			

Contractor is to verify that all information shown on drawings has been thoroughly checked, complies with the contract documents and is adequate to meet the field conditions. Some dimensions and details may differ slightly from contract drawings to accommodate the manufacturing or design process. Approval of this drawing indicates that any deviation from the contract documents has been reviewed and found to be acceptable. Production will not commence until receipt of signed, approved shop drawings.

This drawing contains information proprietary to CONCRETE SYSTEMS, INC. This drawing is disclosed with the understanding that it will be retained in confidence and its use limited solely to the purpose for which it is disclosed. It is understood that no reproduction of this drawing is authorized without permission from CONCRETE SYSTEMS, INC. and that it will be returned to CONCRETE SYSTEMS, INC. upon request.

This drawing is based upon information provided from the following documents and/or sources:

Engineer: STATE OF VT/AOT PROGRAM DEVELOPMENT
Project No: ----
Drawings: STATE OF VT/AOT PROPOSED IMPROVEMENT BRIDGE PROJECT, TOWN OF RICHFORD SHEETS 1,2,4,22,23,24 OF 36
Specifications: STANDARD SPECIFICATIONS FOR CONSTRUCTION DATED 2011
Other: ----

CSI
Concrete Systems Inc.
9 Commercial St., Hudson, NH,03051
Phone 603-889-4163
Fax 603-889-2417

STATE AGENCY
VTrans Working to Get You There

Drawn By R. YEAGER	Date 16APR2015
Reviewed By B. KOLAWOLE	Date
Approved By	Date

G.W. TATRO CONSTRUCTION, INC.
VT/AOT BRIDGE REPLACEMENT– ROAD IMPROVEMENT
RICHFORD, VT.

C | SHOP DRAWING C2 | REV 0
Drawing No. C22312-C2
Quantity: 2 | Project No: BRF030229 | SHEET 2 OF 13

Stamp for structural design only

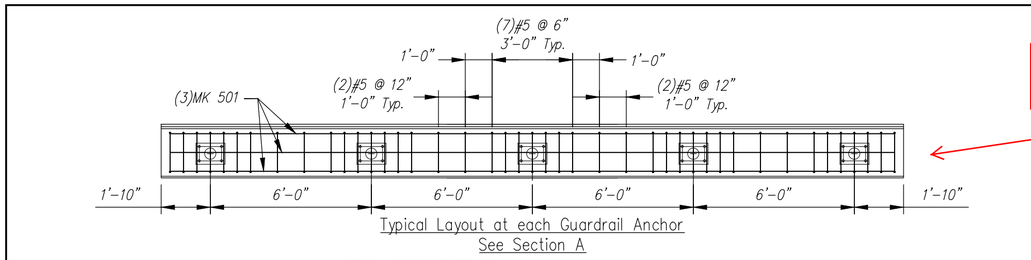

Typical Layout at each Guardrail Anchor
See Section A

PLAN VIEW
HEADWALL REINFORCING DETAIL

Scale: 1/4" = 1'-0"

post spacing and rebar spacing to be redone

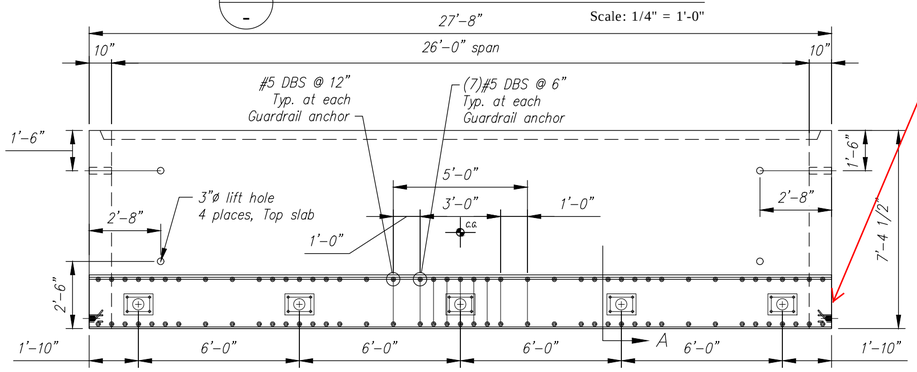

PLAN VIEW

Scale: 1/4" = 1'-0"

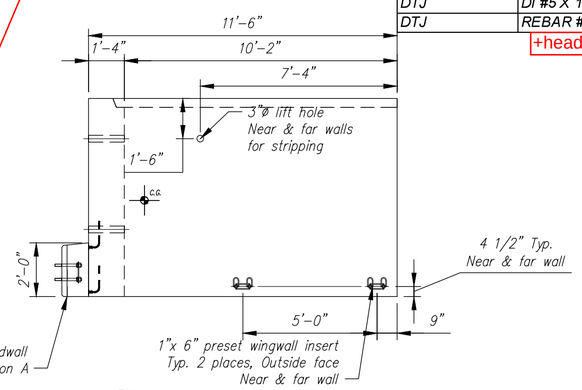

R. SIDE ELEVATION

Scale: 1/4" = 1'-0"

QUANTITY = 1
WEIGHT = 33.41 TONS

not seeing this on the APL

C3 - BILL OF MATERIALS / EMBEDS				
CSI ID#	DESCRIPTION	QTY	UM	COMMENTS
CT-00005	CONSOLIDECK SALTGUARD (SILANE SILOXANE)	1.30	GA	
EM-0005A	1" X 6 " PRESET WING INSERTS	4	EA	
EM-00033	3" FOAM CORE PVC	7	FT	
JS-00002	1"X1"CLOSED NEOP GASKET	49	FT	AROUND BELL
DTJ	DBSAE #5 X 18" Z-BAR GR 60 VTAOT LEVEL II	86	EA	DOWEL BAR SPLICER
DTJ	REBAR #4 Z-BAR GR 60 VTAOT LEVEL II	784	LB	
DTJ	REBAR #5 Z-BAR GR 60 VTAOT LEVEL II	57	LB	
DTJ	REBAR #7 Z-BAR GR 60 VTAOT LEVEL II	2539	LB	
MX-FA5000SC30	MIX DESIGN - FLY ASH 5000 SELF CONSOLIDATING	14.72	CY	
C3 HEADWALL - BILL OF MATERIALS / EMBEDS				
DTJ	GUARDRAIL ANCHOR	5	EA	SUPPLIED BY OTHERS
DTJ	DI #5 X 18" Z-BAR GR 60 VTAOT LEVEL II	86	EA	DOWEL IN
DTJ	REBAR #5 Z-BAR GR 60 VTAOT LEVEL II	86	LB	

+headwall mix design

C3 Culvert Rebar Schedule			
MK		QTY	LENGTH
401	#4	18	10 '- 6 "
402	#4	9	27 '- 0 "
403	#4	104	7 '- 1.5 "
501	#5	2	27 '- 4 "
701	#7	36	18 '- 0 "
702	#7	22	27 '- 0 "

C3 HW Rebar Schedule			
MK		QTY	LENGTH
501	#5	3	27 '- 4 "

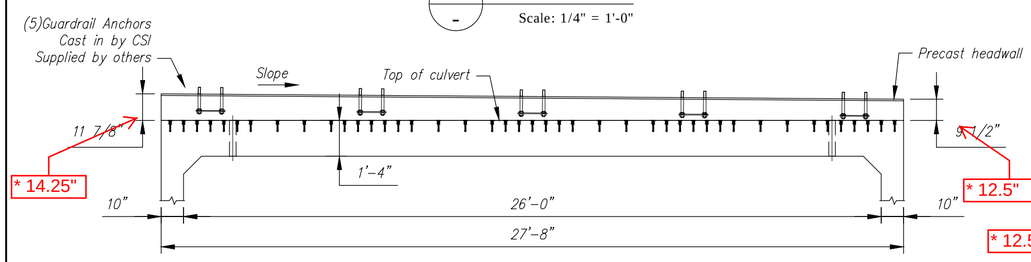

PARTIAL ELEVATION

Scale: 1/4" = 1'-0"

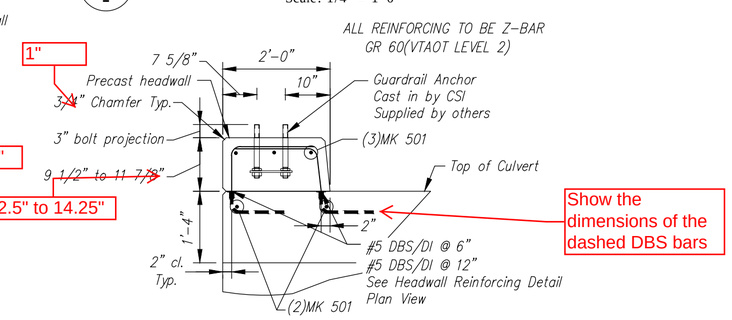

Show the dimensions of the dashed DBS bars

SECTION A

ALL REINFORCING TO BE Z-BAR GR 60(VTAOT LEVEL 2)

Scale: N.T.S.

Vermont Agency of Transportation
RECEIVED
Arch Submittal CSI 4_24_15_rejected.pdf
CK'D BY FDB OK'D BY HIS
April 24, 2015
RESUBMIT YES Rejected
BY Carolyn Carlson DATE 5/6/2015

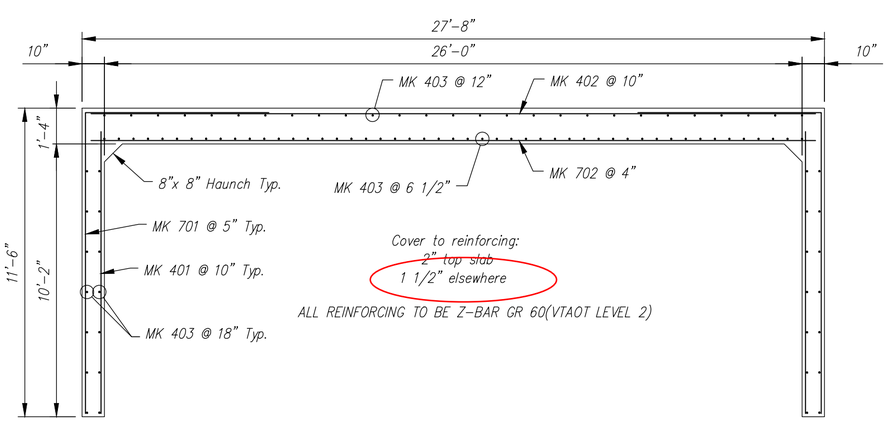

REINFORCING DETAIL

Scale: N.T.S.

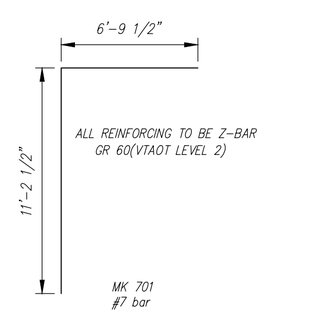

BENDING SCHEDULE

Scale: N.T.S.

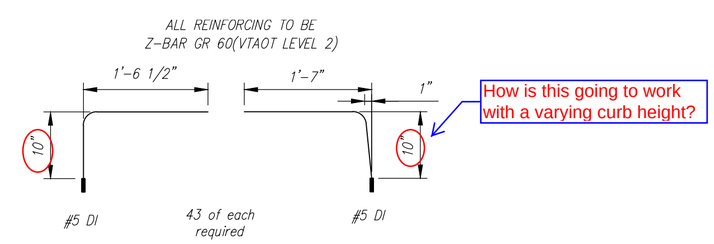

How is this going to work with a varying curb height?

HEADWALL BENDING SCHEDULE

Scale: N.T.S.

Rev.	Date	DESCRIPTION	By
1			
2			
3			
4			
5			
6			
7			
8			
9			
10			

REVISIONS

Contractor is to verify that all information shown on drawings has been thoroughly checked, complies with the contract documents and is adequate to meet the field conditions. Some dimensions and details may differ slightly from contract drawings to accommodate the manufacturing or design process. Approval of this drawing indicates that any deviation from the contract documents has been reviewed and found to be acceptable. Production will not commence until receipt of signed, approved shop drawings.

This drawing contains information proprietary to CONCRETE SYSTEMS, INC. This drawing is disclosed with the understanding that it will be retained in confidence and its use limited solely to the purpose for which it is disclosed. It is understood that no reproduction of this drawing is authorized without permission from CONCRETE SYSTEMS, INC. and that it will be returned to CONCRETE SYSTEMS, INC. upon request.

Stamp for structural design only

This drawing is based upon information provided from the following documents and/or sources:

Engineer: STATE OF VT/AOT PROGRAM DEVELOPMENT
Project No: ----
Drawings: STATE OF VT/AOT PROPOSED IMPROVEMENT BRIDGE PROJECT, TOWN OF RICHFORD SHEETS 1,2,4,22,23,24 OF 36
Specifications: STANDARD SPECIFICATIONS FOR CONSTRUCTION DATED 2011
Other: ----

CSI
Concrete Systems Inc.
9 Commercial St., Hudson, NH,03051
Phone 603-889-4163
Fax 603-889-2417

STATE AGENCY
VTrans Working to Get You There! VERMONT AGENCY OF TRANSPORTATION

Drawn By R. YEAGER	Date 16APR2015	
Reviewed By B. KOLAWOLE	Date	
Approved By	Date	

G.W. TATRO CONSTRUCTION, INC.
VT/AOT BRIDGE REPLACEMENT– ROAD IMPROVEMENT
RICHFORD, VT.

C — SHOP DRAWING C3 — Drawing No. C22312-C3 — REV 0

Quantity: 1 — Project No: BRF030229 — SHEET 3 OF 13

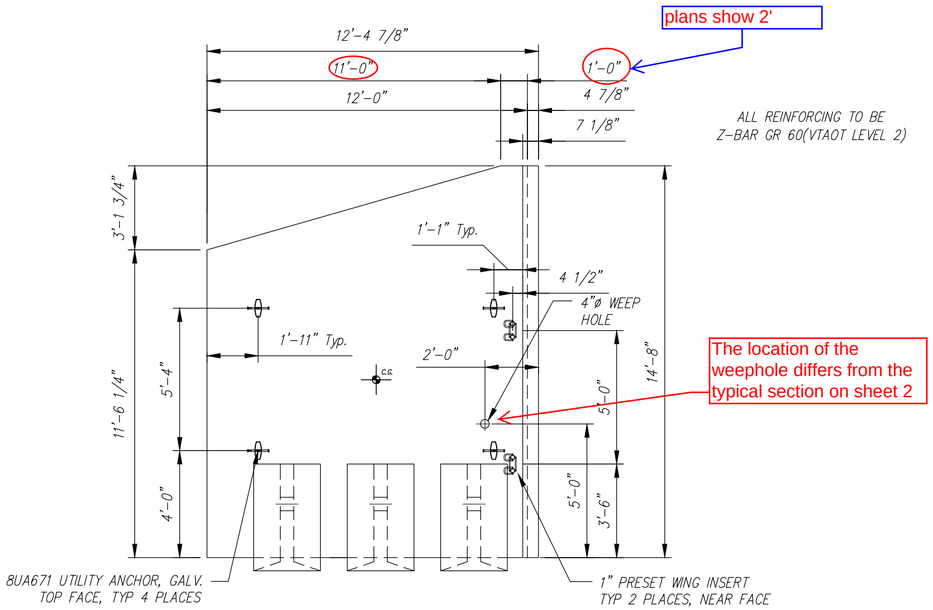

PLAN VIEW

Scale: 1/4" = 1'-0"

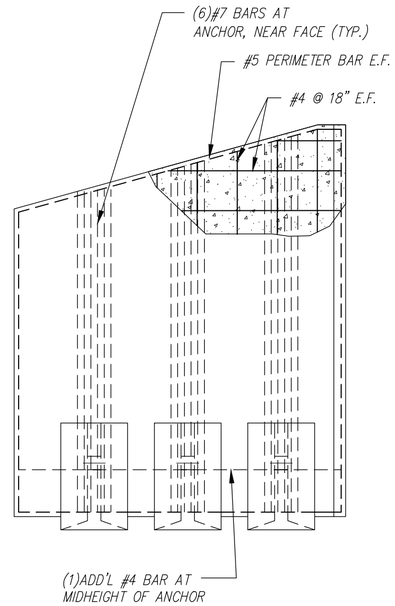

REINFORCING DETAIL

Scale: 1/4" = 1'-0"

1"

ALL EXPOSED EDGES OF
CONCRETE TO RECEIVE
3/4" CHAMFER

QUANTITY = 1
WEIGHT = 15.65 TONS

not seeing this on the APL

WW1 - BILL OF MATERIALS / EMBEDS

CSI ID#	DESCRIPTION	QTY	UM	COMMENTS
CSANC-E	CON/SPAN WINGWALL ANCHOR (E)	3	EA	
CT-00005	CONSOLIDECK SALTGUARD (SILANE SILOXANE)	1.20	GA	
EM-00034	4" FOAM CORE PVC	1	FT	
EM-0005A	1" X 6 " PRESET WING INSERT	2	EA	
EM-00115	UTILITY ANCHOR #8UA671-GALVANIZED	4	EA	
DTJ	REBAR #4 Z-BAR GR 60 VTAOT LEVEL II	331	LB	
DTJ	REBAR #5 Z-BAR GR 60 VTAOT LEVEL II	105	LB	
DTJ	REBAR #7 Z-BAR GR 60 VTAOT LEVEL II	521	LB	

No rebar schedules for the wingwalls?

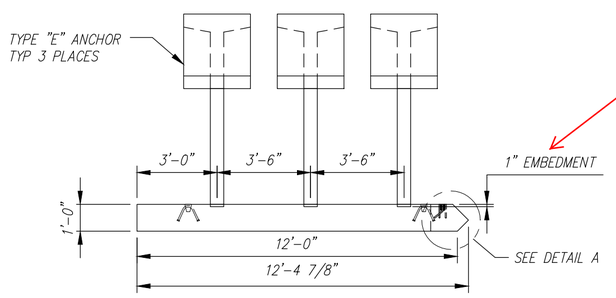

Why the 1" embedment? seems like the T shaped end anchors in details on sheet 2 would not have a 1.5" CLR. Even without the embedment.

FRONT ELEVATION

Scale: 1/4" = 1'-0"

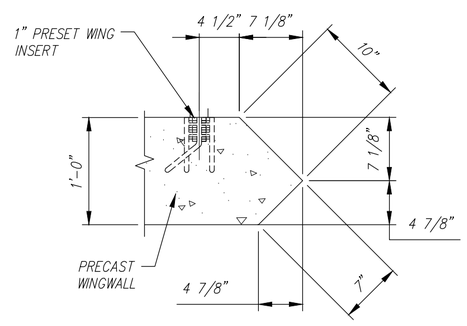

DETAIL A

Scale: N.T.S.

Vermont Agency of Transportation

RECEIVED

Arch Submittal CSI 4_24_15_rejected.pdf

CK'D BY FDB **OK'D BY** HIS

April 24, 2015

RESUBMIT YES **Rejected**

BY Carolyn Carlson **DATE** 5/6/2015

Rev.	Date	DESCRIPTION REVISIONS	By
1			
2			
3			
4			
5			
6			
7			
8			
9			
10			

Contractor is to verify that all information shown on drawings has been thoroughly checked, complies with the contract documents and is adequate to meet the field conditions. Some dimensions and details may differ slightly from contract drawings to accommodate the manufacturing or design process. Approval of this drawing indicates that any deviation from the contract documents has been reviewed and found to be acceptable. Production will not commence until receipt of signed, approved shop drawings.

This drawing contains information proprietary to CONCRETE SYSTEMS, INC. This drawing is disclosed with the understanding that it will be retained in confidence and its use limited solely to the purpose for which it is disclosed. It is understood that no reproduction of this drawing is authorized without permission from CONCRETE SYSTEMS, INC. and that it will be returned to CONCRETE SYSTEMS, INC. upon request.

This drawing is based upon information provided from the following documents and/or sources:

Engineer: STATE OF VT/AOT PROGRAM DEVELOPMENT
Project No: ----
Drawings: STATE OF VT/AOT PROPOSED IMPROVEMENT BRIDGE PROJECT, TOWN OF RICHFORD SHEETS 1,2,4,22,23,24 OF 36
Specifications: STANDARD SPECIFICATIONS FOR CONSTRUCTION DATED 2011

Other: ----

CSI
Concrete Systems Inc.
9 Commercial St., Hudson, NH,03051
Phone 603-889-4163
Fax 603-889-2417

STATE AGENCY
VTrans Working to Get You There

Drawn By B. SKELTON/RY	Date 04/17/2015
Reviewed By B. KOLAWOLE	Date
Approved By	Date

G.W. TATRO CONSTRUCTION, INC.
VT/AOT BRIDGE REPLACEMENT– ROAD IMPROVEMENT
RICHFORD, VT.

C | SHOP DRAWING WW1 | REV 0
Drawing No. C22312-WW1

Quantity: 1 | Project No: BRF030229 | SHEET 4 OF 13

Stamp for structural design only

Plans show 2'

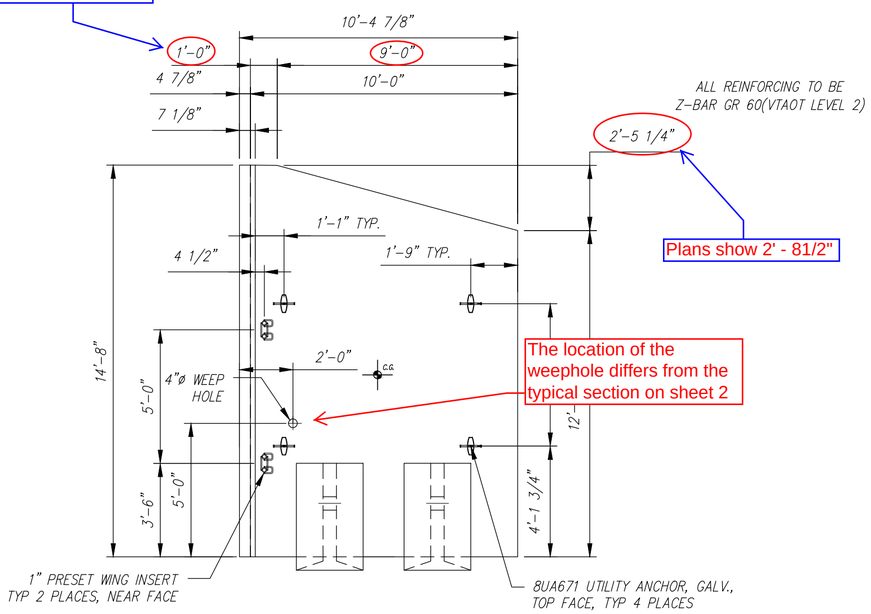

Plans show 2' - 81/2"

The location of the weephole differs from the typical section on sheet 2

PLAN VIEW

Scale: 1/4" = 1'-0"

1"

ALL EXPOSED EDGES OF CONCRETE TO RECEIVE 3/4" CHAMFER

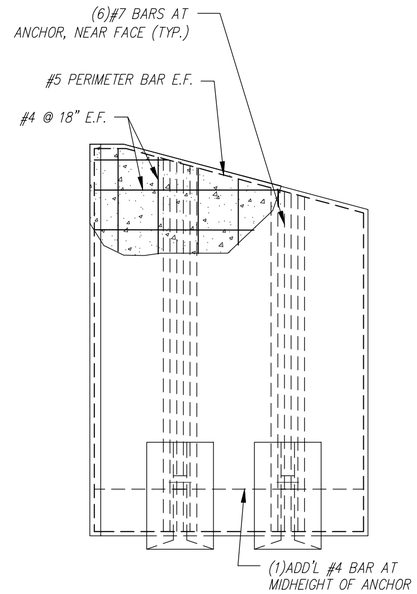

REINFORCING DETAIL

Scale: 1/4" = 1'-0"

not seeing this on the APL

QUANTITY = 1
WEIGHT = 12.94 TONS

WW2 - BILL OF MATERIALS / EMBEDS				
CSI ID#	DESCRIPTION	QTY	UM	COMMENTS
CSANC-E	CON/SPAN WINGWALL ANCHOR (E)	2	EA	
CT-00005	CONSOLIDECK SALTGUARD (SILANE SILOXANE)	1.10	GA	
EM-00034	4" FOAM CORE PVC	1	FT	
EM-0005A	1" X 6 " PRESET WING INSERT	2	EA	
EM-00115	UTILITY ANCHOR #8UA671-GALVANIZED	4	EA	
DTJ	REBAR #4 Z-BAR GR 60 VTAOT LEVEL II	282	LB	
DTJ	REBAR #5 Z-BAR GR 60 VTAOT LEVEL II	98	LB	
DTJ	REBAR #7 Z-BAR GR 60 VTAOT LEVEL II	343	LB	

No rebar schedules for the wingwalls?

Why the 1" embedment? seems like the T shaped end anchors in details on sheet 2 would not have a 1.5" CLR. Even without the embedment.

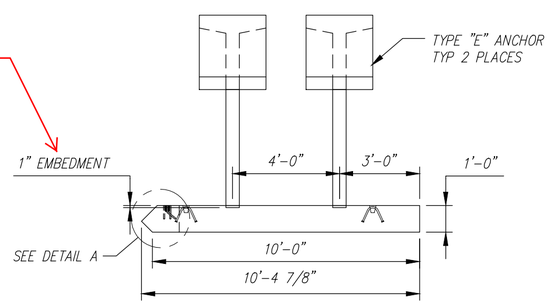

FRONT ELEVATION

Scale: 1/4" = 1'-0"

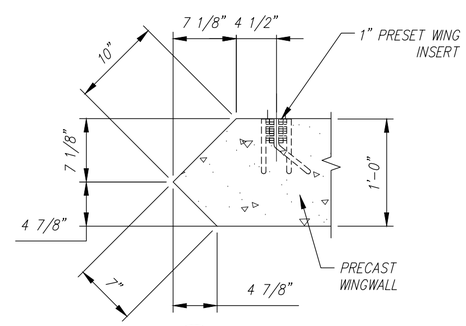

DETAIL A

Scale: N.T.S.

Vermont Agency of Transportation
RECEIVED
Arch Submittal CSI 4_24_15_rejected.pdf

CK'D BY FDB OK'D BY HIS

April 24, 2015

RESUBMIT YES Rejected

BY Carolyn Carlson DATE 5/6/2015

Rev.	Date	DESCRIPTION REVISIONS	By
1			
2			
3			
4			
5			
6			
7			
8			
9			
10			

Contractor is to verify that all information shown on drawings has been thoroughly checked, complies with the contract documents and is adequate to meet the field conditions. Some dimensions and details may differ slightly from contract drawings to accommodate the manufacturing or design process. Approval of this drawing indicates that any deviation from the contract documents has been reviewed and found to be acceptable. Production will not commence until receipt of signed, approved shop drawings.

This drawing contains information proprietary to CONCRETE SYSTEMS, INC. This drawing is disclosed with the understanding that it will be retained in confidence and its use limited solely to the purpose for which it is disclosed. It is understood that no reproduction of this drawing is authorized without permission from CONCRETE SYSTEMS, INC. and that it will be returned to CONCRETE SYSTEMS, INC. upon request.

This drawing is based upon information provided from the following documents and/or sources:

Engineer: STATE OF VT/AOT PROGRAM DEVELOPMENT
Project No: ----
Drawings: STATE OF VT/AOT PROPOSED IMPROVEMENT BRIDGE PROJECT, TOWN OF RICHFORD SHEETS 1,2,4,22,23,24 OF 36
Specifications: STANDARD SPECIFICATIONS FOR CONSTRUCTION DATED 2011
Other: ----

Concrete Systems Inc.
9 Commercial St., Hudson, NH,03051
Phone 603-889-4163
Fax 603-889-2417

STATE AGENCY
VTrans Working to Get You There

Drawn By B. SKELTON/RY	Date 04/17/2015
Reviewed By B. KOLAWOLE	Date
Approved By	Date

G.W. TATRO CONSTRUCTION, INC.
VT/AOT BRIDGE REPLACEMENT– ROAD IMPROVEMENT
RICHFORD, VT.

C | SHOP DRAWING WW2 | Drawing No. C22312–WW2 | REV 0

Quantity: 1 | Project No: BRF030229 | SHEET 5 OF 13

Stamp for structural design only

Plans show 2'

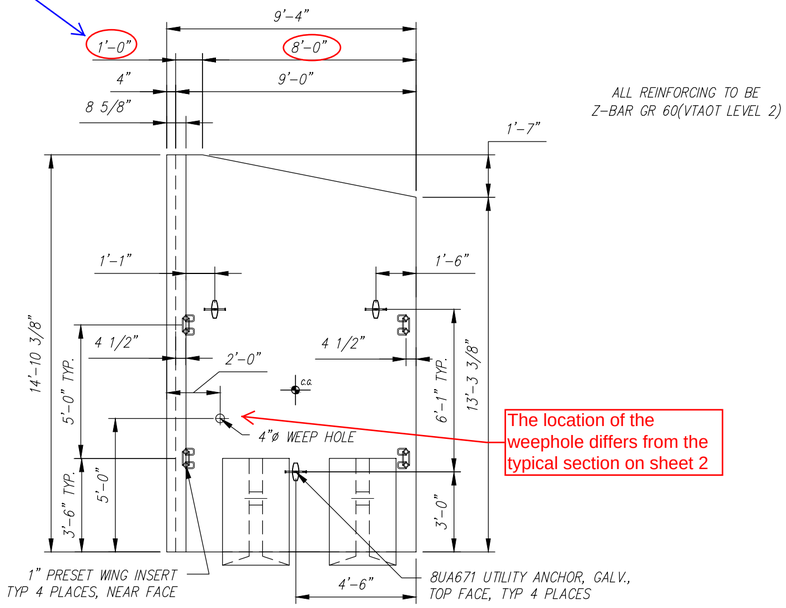

ALL REINFORCING TO BE Z-BAR GR 60(VTAOT LEVEL 2)

The location of the weephole differs from the typical section on sheet 2

PLAN VIEW

Scale: 1/4" = 1'-0"

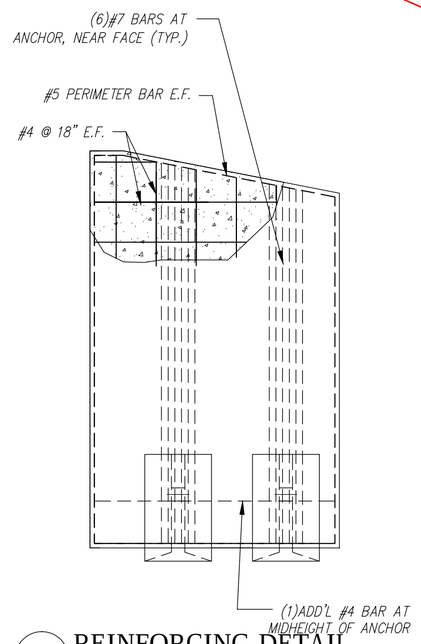

REINFORCING DETAIL

Scale: 1/4" = 1'-0"

Not seeing this product in the APL

QUANTITY = 1
WEIGHT = 12.23 TONS

WW3A - BILL OF MATERIALS / EMBEDS				
CSI ID#	DESCRIPTION	QTY	UM	COMMENTS
CSANC-E	CON/SPAN WINGWALL ANCHOR (E)	2	EA	
CT-00005	CONSOLIDECK SALTGUARD (SILANE SILOXANE)	1.00	GA	
EM-00034	4" FOAM CORE PVC	1	FT	
EM-0005A	1" X 6 " PRESET WING INSERT	4	EA	
EM-00115	UTILITY ANCHOR #8UA671-GALVANIZED	3	EA	
DTJ	REBAR #4 Z-BAR GR 60 VTAOT LEVEL II	248	LB	
DTJ	REBAR #5 Z-BAR GR 60 VTAOT LEVEL II	95	LB	
DTJ	REBAR #7 Z-BAR GR 60 VTAOT LEVEL II	350	LB	

No rebar schedules for the wingwalls?

1"

ALL EXPOSED EDGES OF CONCRETE TO RECEIVE 3/4" CHAMFER

Why the 1" embedment? seems like the T shaped end anchors in details on sheet 2 would not have a 1.5" CLR. Even without the embedment.

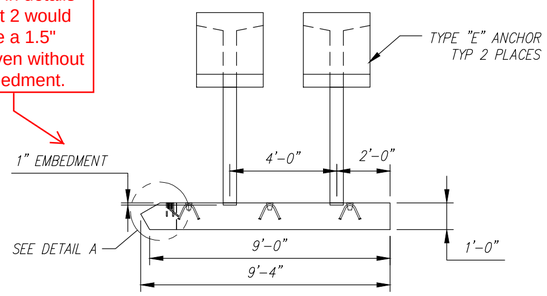

FRONT ELEVATION

Scale: 1/4" = 1'-0"

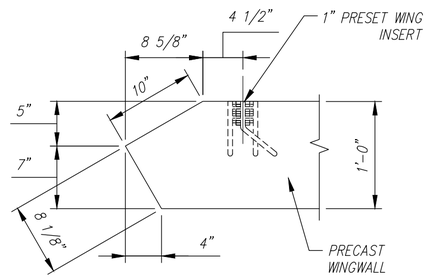

DETAIL A

Scale: N.T.S.

Vermont Agency of Transportation
RECEIVED
Arch Submittal CSI 4_24_15_rejected.pdf
CK'D BY FDB OK'D BY HIS
April 24, 2015
RESUBMIT YES Rejected
BY Carolyn Carlson DATE 5/6/2015

Rev.	Date	DESCRIPTION	By
1			
2			
3			
4			
5			
6			
7			
8			
9			
10			

REVISIONS

Contractor is to verify that all information shown on drawings has been thoroughly checked, complies with the contract documents and is adequate to meet the field conditions. Some dimensions and details may differ slightly from contract drawings to accommodate the manufacturing or design process. Approval of this drawing indicates that any deviation from the contract documents has been reviewed and found to be acceptable. Production will not commence until receipt of signed, approved shop drawings.

This drawing contains information proprietary to CONCRETE SYSTEMS, INC. This drawing is disclosed with the understanding that it will be retained in confidence and its use limited solely to the purpose for which it is disclosed. It is understood that no reproduction of this drawing is authorized without permission from CONCRETE SYSTEMS, INC. and that it will be returned to CONCRETE SYSTEMS, INC. upon request.

This drawing is based upon information provided from the following documents and/or sources:

Engineer: STATE OF VT/AOT PROGRAM DEVELOPMENT
Project No: ----
Drawings: STATE OF VT/AOT PROPOSED IMPROVEMENT BRIDGE PROJECT, TOWN OF RICHFORD SHEETS 1,2,4,22,23,24 OF 36
Specifications: STANDARD SPECIFICATIONS FOR CONSTRUCTION DATED 2011 ----
Other: ----

Concrete Systems Inc.
9 Commercial St., Hudson, NH,03051
Phone 603-889-4163
Fax 603-889-2417

STATE AGENCY
VTrans Working to Get You There

Drawn By B. SKELTON/RY	Date 04/17/2015	
Reviewed By B. KOLAWOLE	Date	
Approved By	Date	

G.W. TATRO CONSTRUCTION, INC.
VT/AOT BRIDGE REPLACEMENT– ROAD IMPROVEMENT
RICHFORD, VT.

C | SHOP DRAWING WW3A | REV 0
Drawing No. C22312–WW3A
Quantity: 1 | Project No: BRF030229 | SHEET 6 OF 13

Stamp for structural design only

not seeing this on the APL

QUANTITY = 1
WEIGHT = 10.67 TONS

WW3B - BILL OF MATERIALS / EMBEDS				
CSI ID#	DESCRIPTION	QTY	UM	COMMENTS
CSANC-E	CONSPAN WINGWALL ANCHOR (E)	2	EA	
CT-00005	CONSOLIDECK SALTGUARD (SILANE SILOXANE)	1.00	GA	
EM-00034	4" FOAM CORE PVC	1	FT	
EM-0005A	1" X 6 " PRESET WING INSERT	2	EA	
EM-00115	UTILITY ANCHOR #8UA671-GALVANIZED	3	EA	
DTJ	REBAR #4 Z-BAR GR 60 VTAOT LEVEL II	206	LB	
DTJ	REBAR #5 Z-BAR GR 60 VTAOT LEVEL II	95	LB	
DTJ	REBAR #7 Z-BAR GR 60 VTAOT LEVEL II	307	LB	

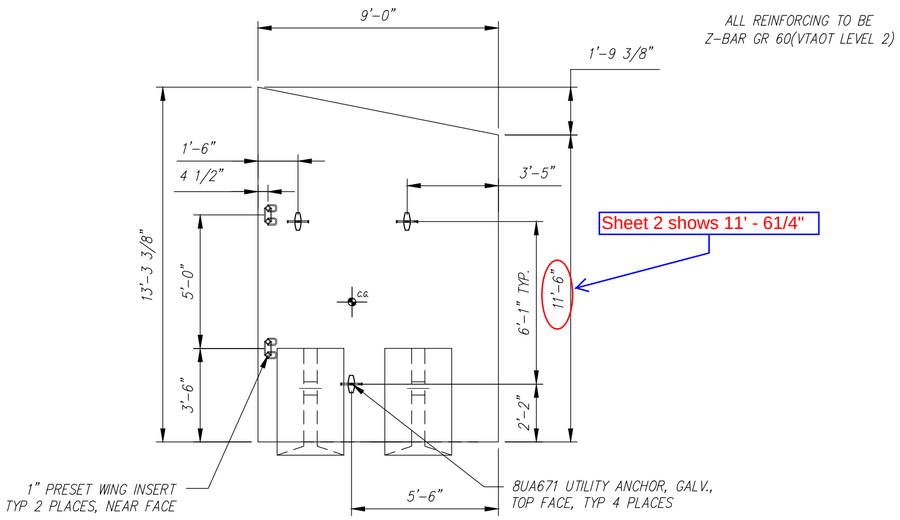

ALL REINFORCING TO BE Z-BAR GR 60(VTAOT LEVEL 2)

Sheet 2 shows 11' - 61/4"

PLAN VIEW

Scale: 1/4" = 1'-0"

1"

ALL EXPOSED EDGES OF CONCRETE TO RECEIVE 3/4" CHAMFER

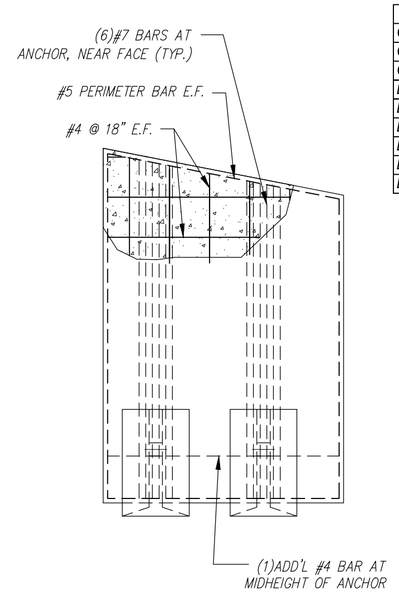

REINFORCING DETAIL

Scale: 1/4" = 1'-0"

No rebar schedules for the wingwalls?

Why the 1" embedment? seems like the T shaped end anchors in details on sheet 2 would not have a 1.5" CLR. Even without the embedment.

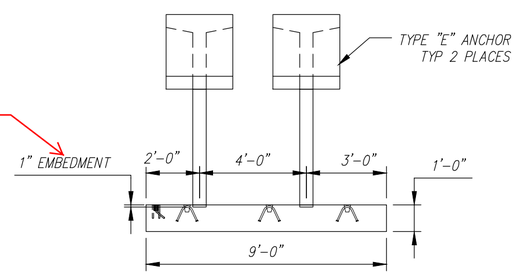

FRONT ELEVATION

Scale: 1/4" = 1'-0"

Vermont Agency of Transportation
RECEIVED
Arch Submittal CSI 4_24_15_rejected.pdf
CK'D BY FDB OK'D BY HIS
April 24, 2015
RESUBMIT YES Rejected
BY Carolyn Carlson DATE 5/6/2015

Rev.	Date	DESCRIPTION REVISIONS	By
10			
9			
8			
7			
6			
5			
4			
3			
2			
1			

Contractor is to verify that all information shown on drawings has been thoroughly checked, complies with the contract documents and is adequate to meet the field conditions. Some dimensions and details may differ slightly from contract drawings to accommodate the manufacturing or design process. Approval of this drawing indicates that any deviation from the contract documents has been reviewed and found to be acceptable. Production will not commence until receipt of signed, approved shop drawings.

This drawing contains information proprietary to CONCRETE SYSTEMS, INC. This drawing is disclosed with the understanding that it will be retained in confidence and its use limited solely to the purpose for which it is disclosed. It is understood that no reproduction of this drawing is authorized without permission from CONCRETE SYSTEMS, INC. and that it will be returned to CONCRETE SYSTEMS, INC. upon request.

This drawing is based upon information provided from the following documents and/or sources:

Engineer: STATE OF VT/AOT PROGRAM DEVELOPMENT
Project No: ----
Drawings: STATE OF VT/AOT PROPOSED IMPROVEMENT BRIDGE PROJECT, TOWN OF RICHFORD SHEETS 1,2,4,22,23,24 OF 36
Specifications: STANDARD SPECIFICATIONS FOR CONSTRUCTION DATED 2011

Other: ----

Concrete Systems Inc.
9 Commercial St., Hudson, NH,03051
Phone 603-889-4163
Fax 603-889-2417

STATE AGENCY
VTrans Working to Get You There Greater access to opportunities

Drawn By B. SKELTON/RY	Date 04/17/2015	C	G.W. TATRO CONSTRUCTION, INC. VT/AOT BRIDGE REPLACEMENT– ROAD IMPROVEMENT RICHFORD, VT.
Reviewed By B. KOLAWOLE	Date		Drawing No. SHOP DRAWING WW3B C22312–WW3B — REV 0
Approved By	Date	Quantity: 1	Project No: BRF030229 — SHEET 7 OF 13

Stamp for structural design only

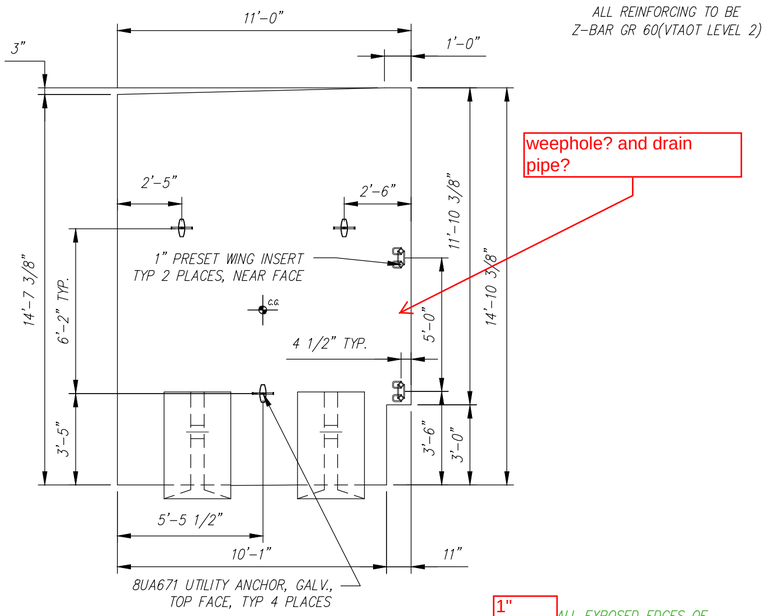

weephole? and drain pipe?

1" ALL EXPOSED EDGES OF CONCRETE TO RECEIVE 3/4" CHAMFER

PLAN VIEW

Scale: 1/4" = 1'-0"

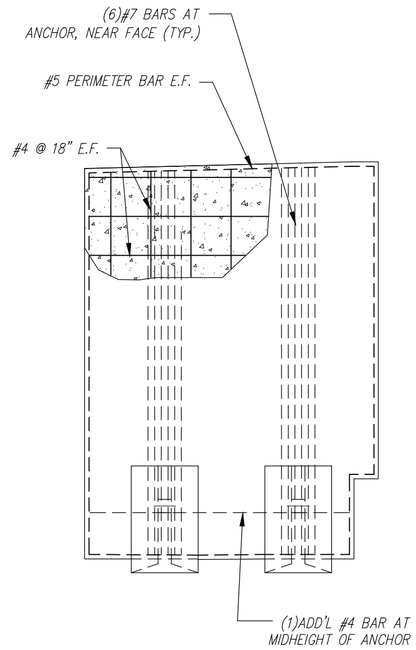

REINFORCING DETAIL

Scale: 1/4" = 1'-0"

not seeing this on the APL

QUANTITY = 1
WEIGHT = 14.30 TONS

WW4 - BILL OF MATERIALS / EMBEDS				
CSI ID#	DESCRIPTION	QTY	UM	COMMENTS
CSANC-E	CON/SPAN WINGWALL ANCHOR (E)	2	EA	
CT-00005	CONSOLIDECK SALTGUARD (SILANE SILOXANE)	1.20	GA	
EM-00034	4" FOAM CORE PVC	1	FT	
EM-0005A	1" X 6 " PRESET WING INSERT	2	EA	
EM-00115	UTILITY ANCHOR #8UA671-GALVANIZED	3	EA	
DTJ	REBAR #4 Z-BAR GR 60 VTAOT LEVEL II	293	LB	
DTJ	REBAR #5 Z-BAR GR 60 VTAOT LEVEL II	105	LB	
DTJ	REBAR #7 Z-BAR GR 60 VTAOT LEVEL II	356	LB	

No rebar schedules for the wingwalls?

Why the 1" embedment? seems like the T shaped end anchors in details on sheet 2 would not have a 1.5" CLR. Even without the embedment.

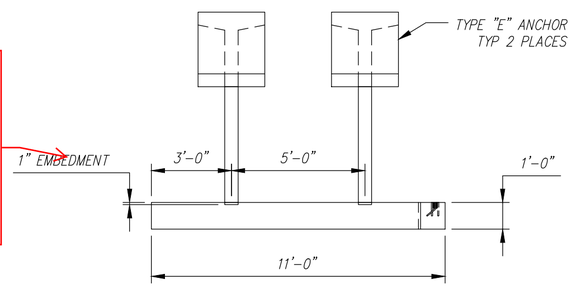

FRONT ELEVATION

Scale: 1/4" = 1'-0"

Vermont Agency of Transportation
RECEIVED
Aich Submittal CSI 4_24_15_rejected.pdf
CK'D BY FDB OK'D BY HIS
April 24, 2015
RESUBMIT YES Rejected
BY Carolyn Carlson DATE 5/6/2015

Rev.	Date	DESCRIPTION REVISIONS	By
10			
9			
8			
7			
6			
5			
4			
3			
2			
1			

Contractor is to verify that all information shown on drawings has been thoroughly checked, complies with the contract documents and is adequate to meet the field conditions. Some dimensions and details may differ slightly from contract drawings to accommodate the manufacturing or design process. Approval of this drawing indicates that any deviation from the contract documents has been reviewed and found to be acceptable. Production will not commence until receipt of signed, approved shop drawings.

This drawing contains information proprietary to CONCRETE SYSTEMS, INC. This drawing is disclosed with the understanding that it will be retained in confidence and its use limited solely to the purpose for which it is disclosed. It is understood that no reproduction of this drawing is authorized without permission from CONCRETE SYSTEMS, INC. and that it will be returned to CONCRETE SYSTEMS, INC. upon request.

This drawing is based upon information provided from the following documents and/or sources:

Engineer: STATE OF VT/AOT PROGRAM DEVELOPMENT
Project No: ----
Drawings: STATE OF VT/AOT PROPOSED IMPROVEMENT BRIDGE PROJECT, TOWN OF RICHFORD SHEETS 1,2,4,22,23,24 OF 36
Specifications: STANDARD SPECIFICATIONS FOR CONSTRUCTION DATED 2011

Other: ----

Concrete Systems Inc.
9 Commercial St., Hudson, NH,03051
Phone 603-889-4163
Fax 603-889-2417

STATE AGENCY
VTrans Working to Get You There Greater access to transportation

Drawn By B. SKELTON/RY Date 04/17/2015
Reviewed By B. KOLAWOLE Date
Approved By Date

G.W. TATRO CONSTRUCTION, INC.
VT/AOT BRIDGE REPLACEMENT– ROAD IMPROVEMENT
RICHFORD, VT.

C
SHOP DRAWING WW4
Drawing No. C22312–WW4
REV 0
Quantity: 1 Project No: BRF030229 SHEET 8 OF 13

Stamp for structural design only

QUANTITY = 1
WEIGHT = 23.02 TONS

FOOTING SLAB - F1 - BILL OF MATERIALS / EMBEDS				
CSI ID#	DESCRIPTION	QTY	UM	COMMENTS
EM-00078	8T SPREAD ANCHOR #FL119/P94	4	EA	
EM-00125	BOLT POCKET PLATE (GALVANIZED)	2	EA	
RM-00013	REBAR #4 BLACK- GR 60	424	LB	
RM-00015	REBAR #5 BLACK-GR 60 40'	264	LB	
RM-00017	REBAR #6 BLACK-GR 60 40'	128	LB	
MX-FA5000SC30	MIX DESIGN - FLY ASH 5000 SELF CONSOLIDATING	9.11	CY	
FOOTING PEDESTAL - F1 - BILL OF MATERIALS / EMBEDS				
RM-00013	REBAR #4 BLACK- GR 60	104	LB	

+conc.

Ftg. Slab - F1 Rebar Schedule				
MK		QTY	LENGTH	
401	#4	26	12 '- 0 "	
402	#4	26	10 '- 9 "	MAX
405	#4	4	10 '- 8 "	
501	#5	40	6 '- 4 "	
601	#6	6	14 '- 3 "	MAX

Ftg. Pedestal-F1 Rebar Schedule			
MK		QTY	LENGTH
402	#4	17	8 '- 3 "
403	#4	9	1 '- 8 "

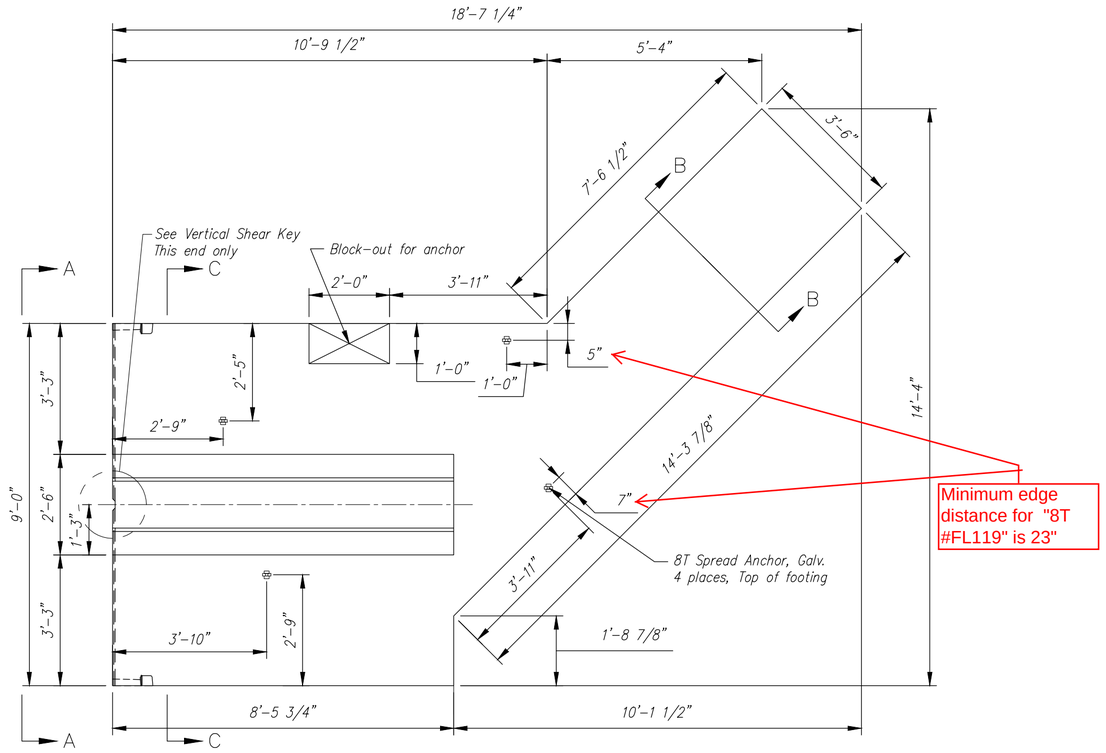

PLAN VIEW
Scale: 3/8" = 1'-0"

Does not match sheet 2

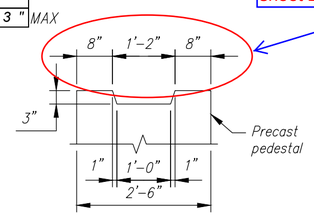

PEDESTAL KEYWAY
Scale: N.T.S.

Vermont Agency of Transportation
RECEIVED
Anch-Submittal CSI-4_24_15_rejected.pdf
CK'D BY FDB OK'D BY HIS
April 24, 2015
RESUBMIT YES Rejected
BY Carolyn Carlson DATE 5/6/2015

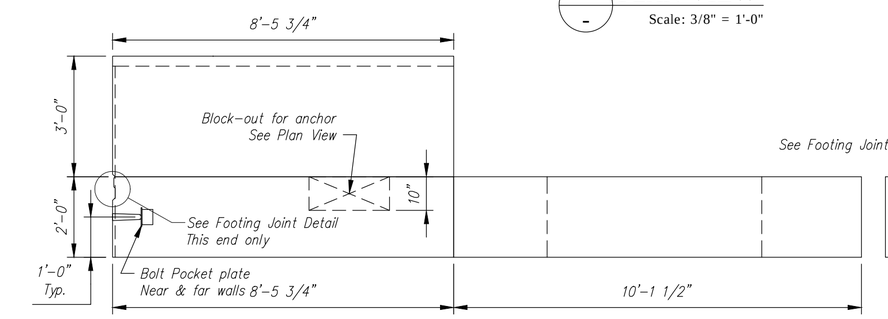

ELEVATION
Scale: 3/8" = 1'-0"

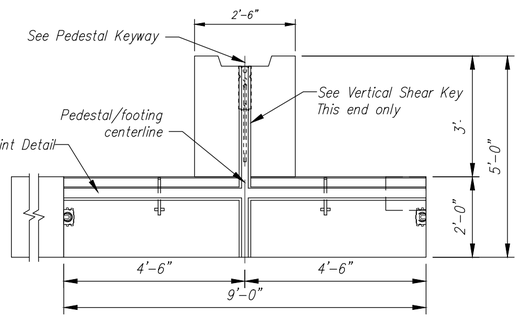

ELEVATION A-A
Scale: 3/8" = 1'-0"

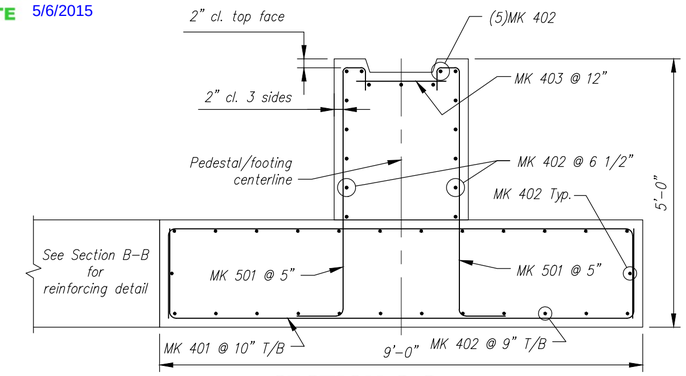

SECTION C-C
REINFORCING DETAIL
Scale: N.T.S.

Does not work with 3" clear

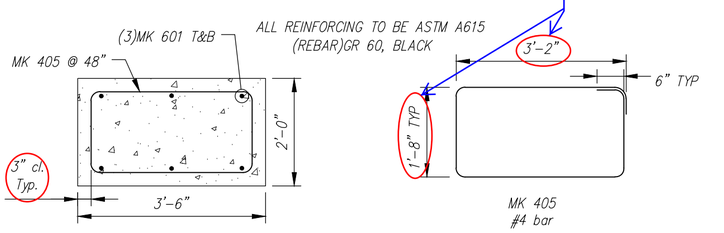

SECTION B-B
REINFORCING DETAIL
Scale: N.T.S.

8" - 2" - 2" = 4" Check

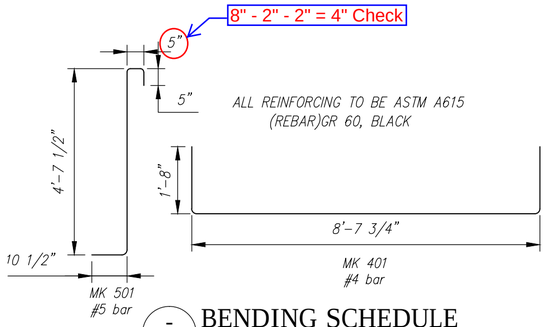

BENDING SCHEDULE
Scale: N.T.S.

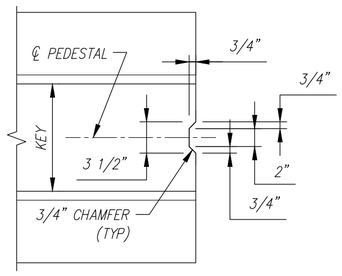

VERTICAL SHEAR KEY
Scale: N.T.S.

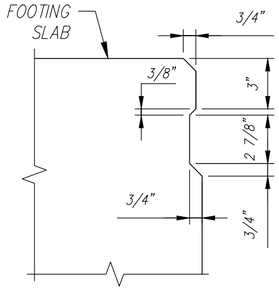

JOINT DETAIL
Scale: N.T.S.

Rev.	Date	DESCRIPTION REVISIONS	By
1			
2			
3			
4			
5			
6			
7			
8			
9			
10			

Contractor is to verify that all information shown on drawings has been thoroughly checked, complies with the contract documents and is adequate to meet the field conditions. Some dimensions and details may differ slightly from contract drawings to accommodate the manufacturing or design process. Approval of this drawing indicates that any deviation from the contract documents has been reviewed and found to be acceptable. Production will not commence until receipt of signed, approved shop drawings.

This drawing contains information proprietary to CONCRETE SYSTEMS, INC. This drawing is disclosed with the understanding that it will be retained in confidence and its use limited solely to the purpose for which it is disclosed. It is understood that no reproduction of this drawing is authorized without permission from CONCRETE SYSTEMS, INC. and that it will be returned to CONCRETE SYSTEMS, INC. upon request.

This drawing is based upon information provided from the following documents and/or sources:

Engineer: STATE OF VT/AOT PROGRAM DEVELOPMENT
Project No: ----
Drawings: STATE OF VT/AOT PROPOSED IMPROVEMENT BRIDGE PROJECT, TOWN OF RICHFORD SHEETS 1,2,4,22,23,24 OF 36
Specifications: STANDARD SPECIFICATIONS FOR CONSTRUCTION DATED 2011
Other: ----

Concrete Systems Inc.
9 Commercial St., Hudson, NH,03051
Phone 603-889-4163
Fax 603-889-2417

STATE AGENCY
VTrans

Drawn By R. YEAGER	Date 16APR2015	C	G.W. TATRO CONSTRUCTION, INC. VT/AOT BRIDGE REPLACEMENT– ROAD IMPROVEMENT RICHFORD, VT.
Reviewed By B. KOLAWOLE	Date		Drawing No. SHOP DRAWING F1 / C22312–F1 — REV 0
Approved By	Date	Quantity: 1	Project No: BRF030229 — SHEET 9 OF 13

Stamp for structural design only

QUANTITY = 1
WEIGHT = 21.97 TONS

Ftg. Slab - F2 Rebar Schedule				
MK		QTY	LENGTH	
401	#4	26	12 '- 0 "	
402	#4	26	10 '- 9 "	MAX
405	#4	4	10 '- 8 "	
501	#5	40	6 '- 4 "	
601	#6	6	12 '- 3 "	MAX

Ftg. Pedestal-F2 Rebar Schedule			
MK		QTY	LENGTH
402	#4	17	8 '- 3 "
403	#4	9	1 '- 8 "

FOOTING SLAB - F2 - BILL OF MATERIALS / EMBEDS				
CSI ID#	DESCRIPTION	QTY	UM	COMMENTS
EM-00078	8T SPREAD ANCHOR #FL119/P94	4	EA	
EM-00125	BOLT POCKET PLATE (GALVANIZED)	2	EA	
RM-00013	REBAR #4 BLACK- GR 60	424	LB	
RM-00015	REBAR #5 BLACK-GR 60 40'	264	LB	
RM-00017	REBAR #6 BLACK-GR 60 40'	110	LB	
MX-FA5000SC30	MIX DESIGN - FLY ASH 5000 SELF CONSOLIDATING	8.59	CY	
FOOTING PEDESTAL - F2 - BILL OF MATERIALS / EMBEDS				
RM-00013	REBAR #4 BLACK- GR 60	104	LB	

+concrete mix

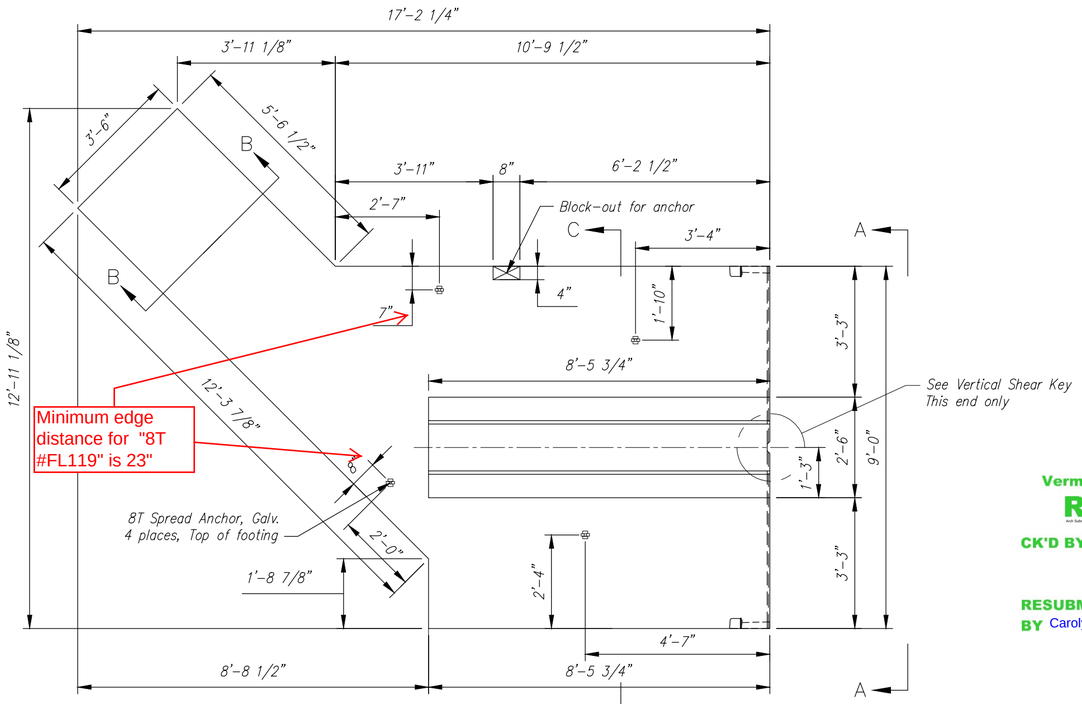

PLAN VIEW
Scale: 3/8" = 1'-0"

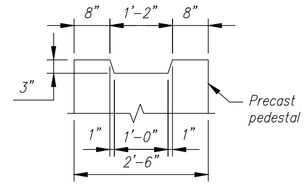

PEDESTAL KEYWAY
Scale: N.T.S.

Vermont Agency of Transportation
RECEIVED
CK'D BY FDB OK'D BY HIS
April 24, 2015
RESUBMIT YES Rejected
BY Carolyn Carlson DATE 5/6/2015

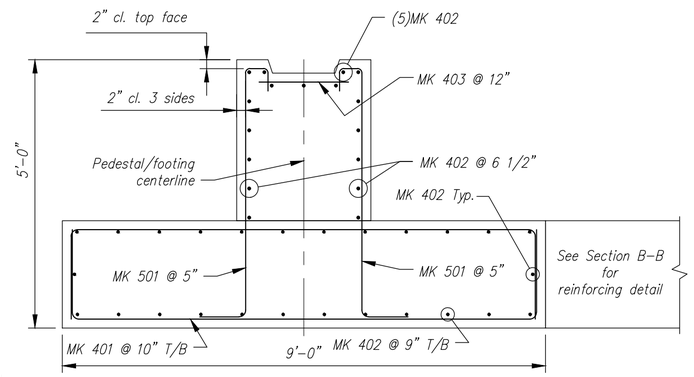

SECTION C-C
REINFORCING DETAIL
Scale: N.T.S.

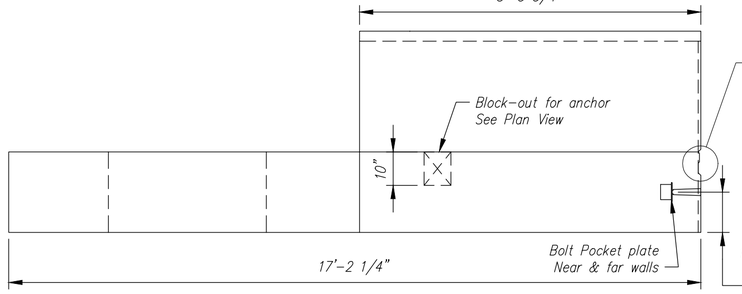

ELEVATION
Scale: 3/8" = 1'-0"

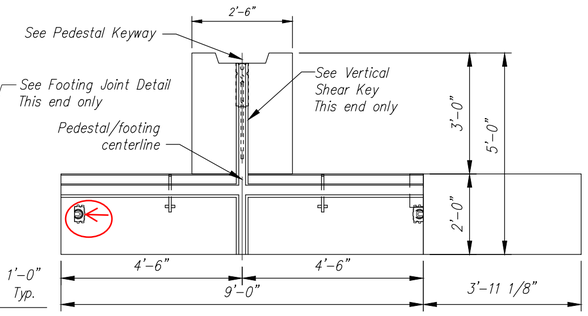

ELEVATION A-A
Scale: 3/8" = 1'-0"

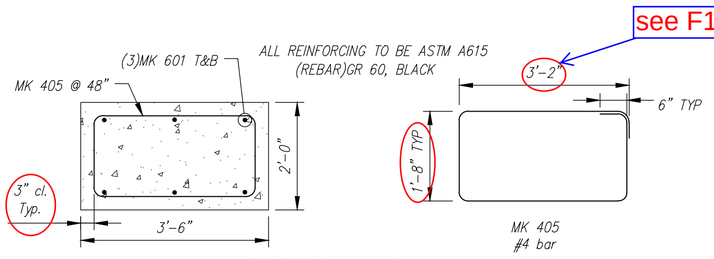

SECTION B-B
REINFORCING DETAIL
Scale: N.T.S.

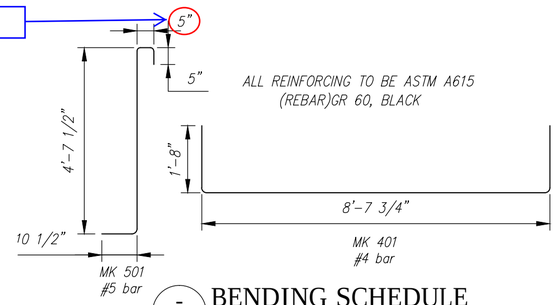

BENDING SCHEDULE
Scale: N.T.S.

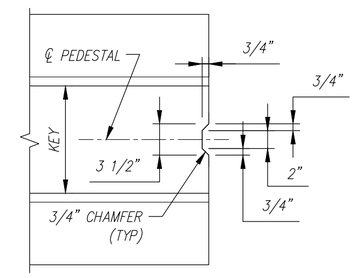

VERTICAL SHEAR KEY
Scale: N.T.S.

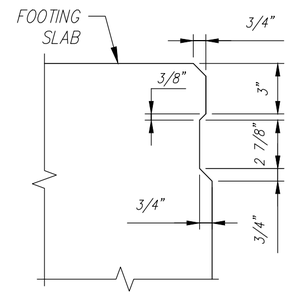

JOINT DETAIL
Scale: N.T.S.

Rev.	Date	By	DESCRIPTION REVISIONS
1			
2			
3			
4			
5			
6			
7			
8			
9			
10			

Contractor is to verify that all information shown on drawings has been thoroughly checked, complies with the contract documents and is adequate to meet the field conditions. Some dimensions and details may differ slightly from contract drawings to accommodate the manufacturing or design process. Approval of this drawing indicates that any deviation from the contract documents has been reviewed and found to be acceptable. Production will not commence until receipt of signed, approved shop drawings.

This drawing contains information proprietary to CONCRETE SYSTEMS, INC. This drawing is disclosed with the understanding that it will be retained in confidence and its use limited solely to the purpose for which it is disclosed. It is understood that no reproduction of this drawing is authorized without permission from CONCRETE SYSTEMS, INC. and that it will be returned to CONCRETE SYSTEMS, INC. upon request.

Stamp for structural design only

This drawing is based upon information provided from the following documents and/or sources:

Engineer: STATE OF VT/AOT PROGRAM DEVELOPMENT
Project No: ----
Drawings: STATE OF VT/AOT PROPOSED IMPROVEMENT BRIDGE PROJECT, TOWN OF RICHFORD SHEETS 1,2,4,22,23,24 OF 36
Specifications: STANDARD SPECIFICATIONS FOR CONSTRUCTION DATED 2011
Other: ----

CSI
Concrete Systems Inc.
9 Commercial St., Hudson, NH,03051
Phone 603-889-4163
Fax 603-889-2417

STATE AGENCY
VTrans

Drawn By R. YEAGER	Date 16APR2015	
Reviewed By B. KOLAWOLE	Date	
Approved By	Date	

G.W. TATRO CONSTRUCTION, INC.
VT/AOT BRIDGE REPLACEMENT– ROAD IMPROVEMENT
RICHFORD, VT.

C | Drawing No. SHOP DRAWING F2 C22312–F2 | REV 0
Quantity: 1 | Project No: BRF030229 | SHEET 10 OF 13

Will three anchors be enough?

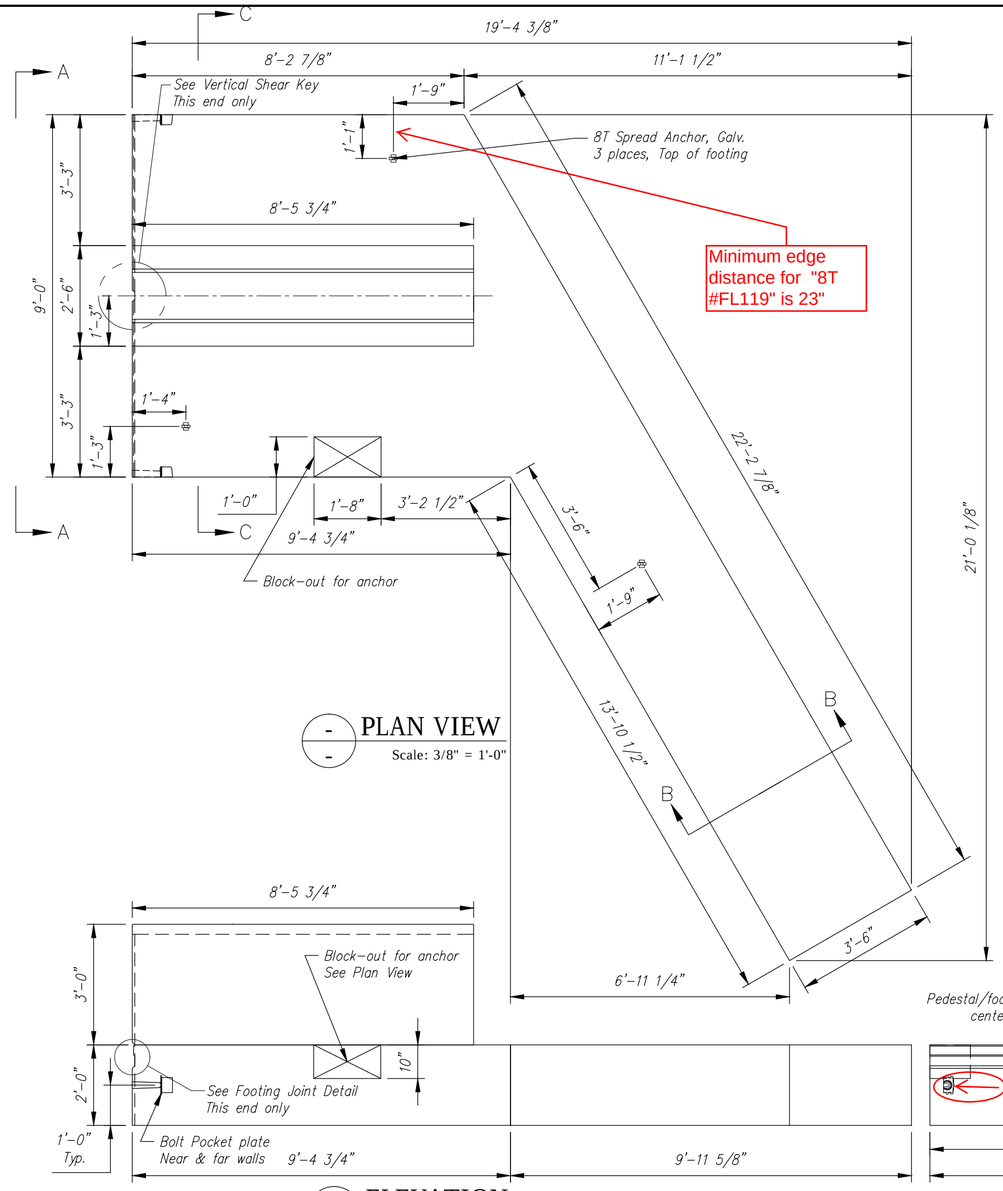

Minimum edge distance for "8T #FL119" is 23"

PLAN VIEW
Scale: 3/8" = 1'-0"

Ftg. Slab - F3 Rebar Schedule				
MK		QTY	LENGTH	
401	#4	22	12 '- 0 "	
402	#4	26	9 '- 4 "	MAX
405	#4	5	10 '- 8 "	
501	#5	40	6 '- 4 "	
601	#6	6	22 '- 0 "	MAX

Ftg. Pedestal-F3 Rebar Schedule			
MK		QTY	LENGTH
402	#4	17	8 '- 3 "
403	#4	9	1 '- 8 "

QUANTITY = 1
WEIGHT = 25.96 TONS

FOOTING SLAB - F3 - BILL OF MATERIALS / EMBEDS				
CSI ID#	DESCRIPTION	QTY	UM	COMMENTS
EM-00078	8T SPREAD ANCHOR #FL119/P94	3	EA	
EM-00125	BOLT POCKET PLATE (GALVANIZED)	2	EA	
RM-00013	REBAR #4 BLACK- GR 60	374	LB	
RM-00015	REBAR #5 BLACK-GR 60 40'	264	LB	
RM-00017	REBAR #6 BLACK-GR 60 40'	198	LB	
MX-FA5000SC30	MIX DESIGN - FLY ASH 5000 SELF CONSOLIDATING	10.56	CY	
FOOTING PEDESTAL - F3 - BILL OF MATERIALS / EMBEDS				
RM-00013	REBAR #4 BLACK- GR 60	104	LB	

+concrete mix

Vermont Agency of Transportation
RECEIVED
CK'D BY FDB OK'D BY HIS
April 24, 2015
RESUBMIT YES Rejected
BY Carolyn Carlson DATE 5/6/2015

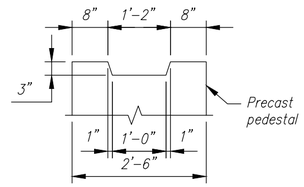

PEDESTAL KEYWAY
Scale: N.T.S.

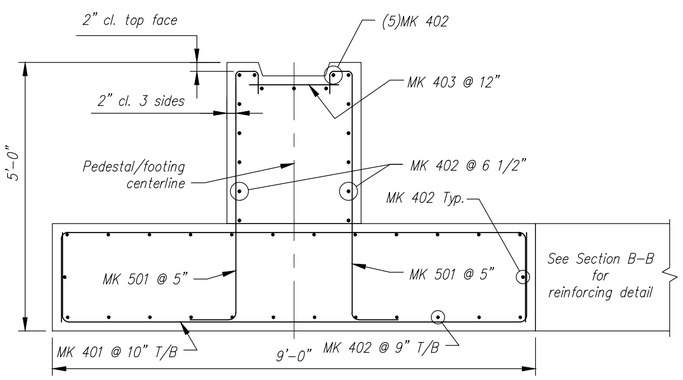

SECTION C-C
REINFORCING DETAIL
Scale: N.T.S.

ELEVATION
Scale: 3/8" = 1'-0"

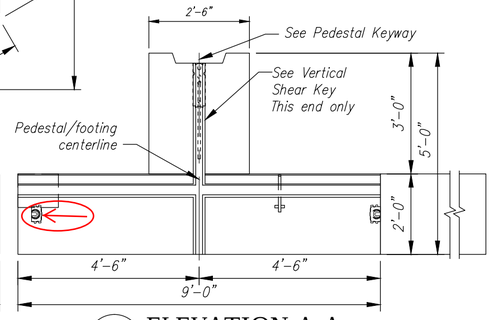

ELEVATION A-A
Scale: 3/8" = 1'-0"

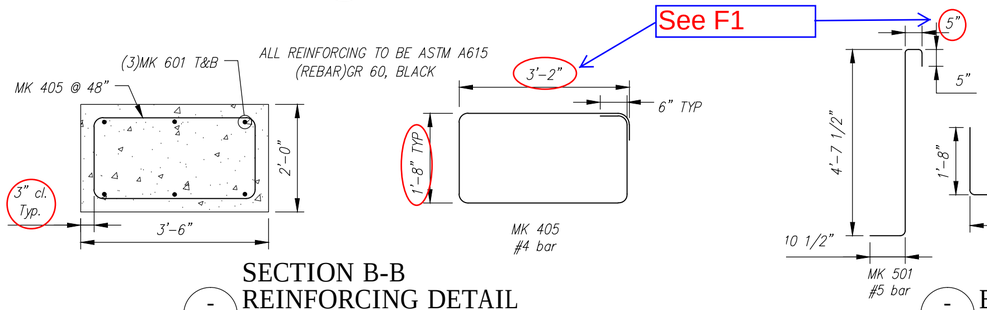

SECTION B-B
REINFORCING DETAIL
Scale: N.T.S.

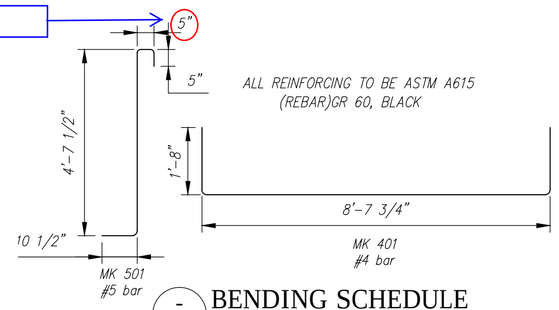

BENDING SCHEDULE
Scale: N.T.S.

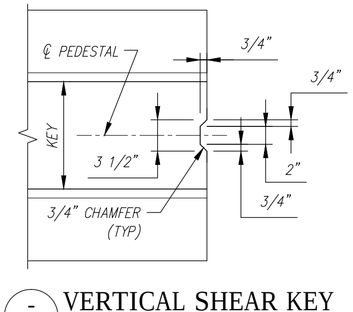

VERTICAL SHEAR KEY
Scale: N.T.S.

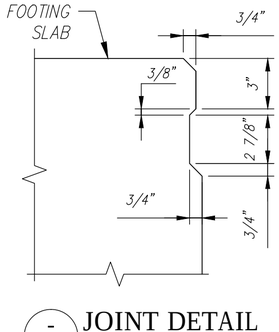

JOINT DETAIL
Scale: N.T.S.

Rev.	Date	DESCRIPTION	By
1			
2			
3			
4			
5			
6			
7			
8			
9			
10			

REVISIONS

Contractor is to verify that all information shown on drawings has been thoroughly checked, complies with the contract documents and is adequate to meet the field conditions. Some dimensions and details may differ slightly from contract drawings to accommodate the manufacturing or design process. Approval of this drawing indicates that any deviation from the contract documents has been reviewed and found to be acceptable. Production will not commence until receipt of signed, approved shop drawings.

This drawing contains information proprietary to CONCRETE SYSTEMS, INC. This drawing is disclosed with the understanding that it will be retained in confidence and its use limited solely to the purpose for which it is disclosed. It is understood that no reproduction of this drawing is authorized without permission from CONCRETE SYSTEMS, INC. and that it will be returned to CONCRETE SYSTEMS, INC. upon request.

This drawing is based upon information provided from the following documents and/or sources:

Engineer: STATE OF VT/AOT PROGRAM DEVELOPMENT
Project No: ----
Drawings: STATE OF VT/AOT PROPOSED IMPROVEMENT BRIDGE PROJECT, TOWN OF RICHFORD SHEETS 1,2,4,22,23,24 OF 36
Specifications: STANDARD SPECIFICATIONS FOR CONSTRUCTION DATED 2011
Other: ----

Concrete Systems Inc.
9 Commercial St., Hudson, NH,03051
Phone 603-889-4163
Fax 603-889-2417

STATE AGENCY
VTrans

Drawn By R. YEAGER	Date 16APR2015	
Reviewed By B. KOLAWOLE	Date	
Approved By	Date	

G.W. TATRO CONSTRUCTION, INC.
VT/AOT BRIDGE REPLACEMENT– ROAD IMPROVEMENT
RICHFORD, VT.

C | Drawing No. SHOP DRAWING F3 / C22312–F3 | REV 0

Quantity: 1 | Project No: BRF030229 | SHEET 11 OF 13

Stamp for structural design only

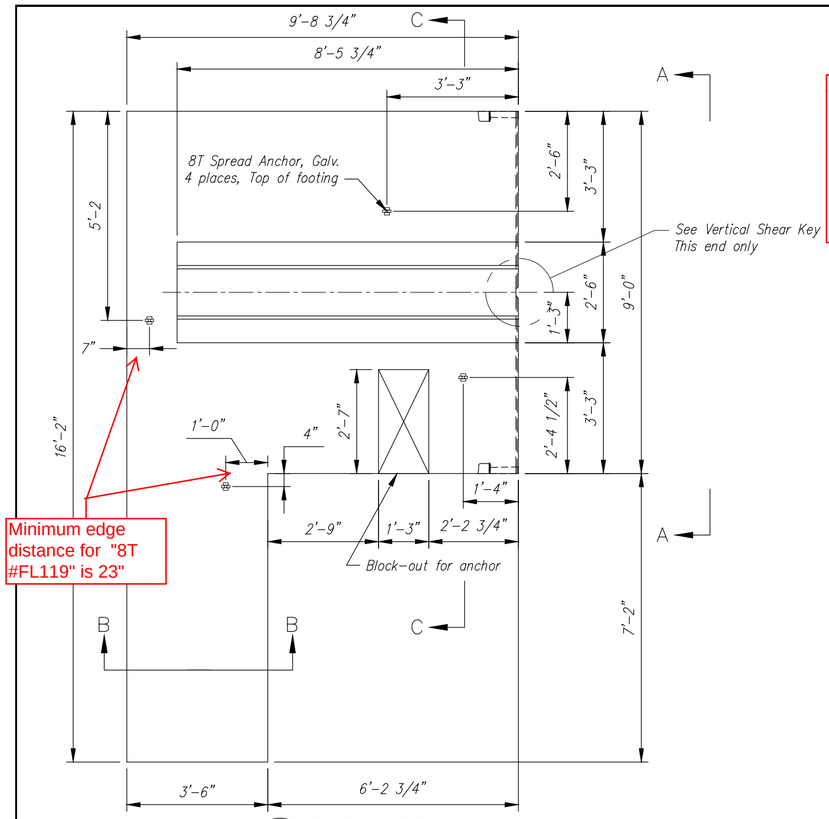

Minimum edge distance for "8T #FL119" is 23"

Adjust footing and dimensions according to WW4 movement

QUANTITY = 1
WEIGHT = 21.47 TONS

Ftg. Slab - F4 Rebar Schedule				
MK		QTY	LENGTH	
401	#4	24	12 '- 0 "	
402	#4	26	9 '- 6 "	MAX
405	#4	3	10 '- 8 "	
501	#5	40	6 '- 4 "	
601	#6	6	9 '- 0 "	MAX

Ftg. Pedestal-F4 Rebar Schedule			
MK		QTY	LENGTH
402	#4	17	8 '- 3 "
403	#4	9	1 '- 8 "

FOOTING SLAB - F4 - BILL OF MATERIALS / EMBEDS				
CSI ID#	DESCRIPTION	QTY	UM	COMMENTS
EM-00078	8T SPREAD ANCHOR #FL119/P94	4	EA	
EM-00125	BOLT POCKET PLATE (GALVANIZED)	2	EA	
RM-00013	REBAR #4 BLACK- GR 60	379	LB	
RM-00015	REBAR #5 BLACK-GR 60 40'	264	LB	
RM-00017	REBAR #6 BLACK-GR 60 40'	81	LB	
MX-FA5000SC30	MIX DESIGN - FLY ASH 5000 SELF CONSOLIDATING	8.34	CY	
FOOTING PEDESTAL - F4 - BILL OF MATERIALS / EMBEDS				
RM-00013	REBAR #4 BLACK- GR 60	104	LB	

+concrete mix

Vermont Agency of Transportation
RECEIVED
Arch Submittal CSI 4_24_15_rejected.pdf
CK'D BY FDB OK'D BY HIS
April 24, 2015
RESUBMIT YES Rejected
BY Carolyn Carlson DATE 5/6/2015

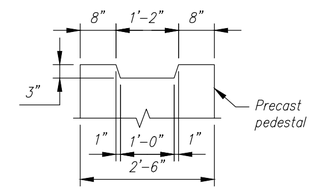

PEDESTAL KEYWAY
Scale: N.T.S.

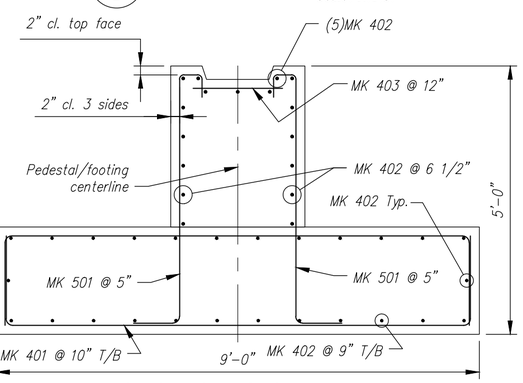

SECTION C-C
REINFORCING DETAIL
Scale: N.T.S.

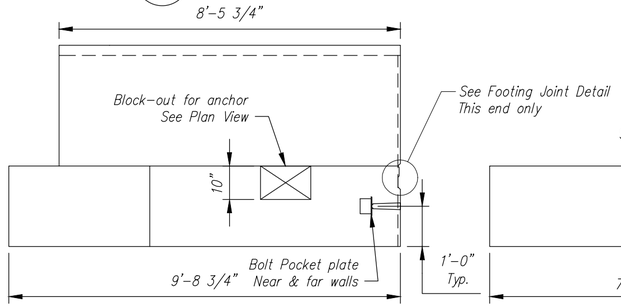

ELEVATION
Scale: 3/8" = 1'-0"

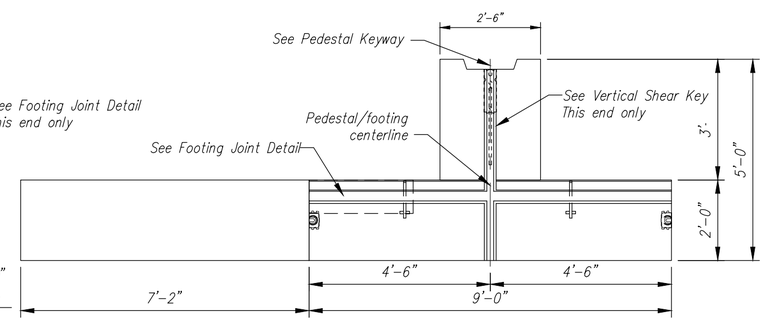

ELEVATION A-A
Scale: 3/8" = 1'-0"

See sheet F1

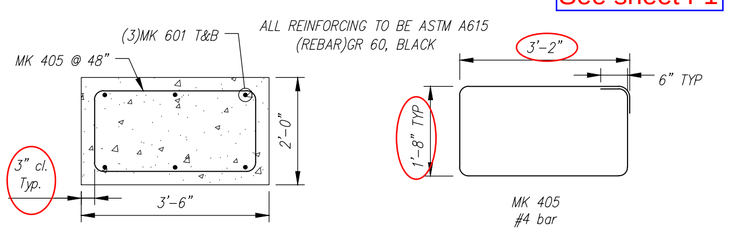

SECTION B-B
REINFORCING DETAIL
Scale: N.T.S.

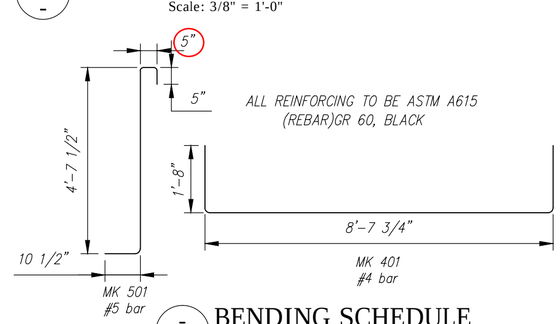

BENDING SCHEDULE
Scale: N.T.S.

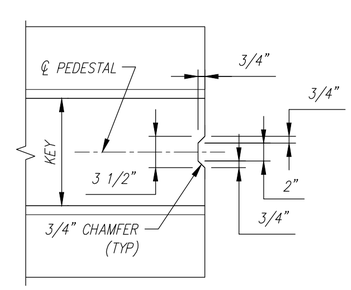

VERTICAL SHEAR KEY
Scale: N.T.S.

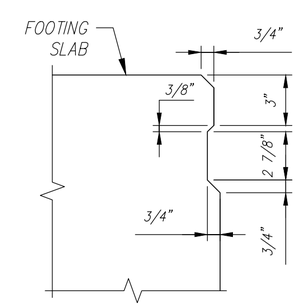

JOINT DETAIL
Scale: N.T.S.

Rev.	Date	DESCRIPTION	By
1			
2			
3			
4			
5			
6			
7			
8			
9			
10			

REVISIONS

Contractor is to verify that all information shown on drawings has been thoroughly checked, complies with the contract documents and is adequate to meet the field conditions. Some dimensions and details may differ slightly from contract drawings to accommodate the manufacturing or design process. Approval of this drawing indicates that any deviation from the contract documents has been reviewed and found to be acceptable. Production will not commence until receipt of signed, approved shop drawings.

This drawing contains information proprietary to CONCRETE SYSTEMS, INC. This drawing is disclosed with the understanding that it will be retained in confidence and its use limited solely to the purpose for which it is disclosed. It is understood that no reproduction of this drawing is authorized without permission from CONCRETE SYSTEMS, INC. and that it will be returned to CONCRETE SYSTEMS, INC. upon request.

This drawing is based upon information provided from the following documents and/or sources:

Engineer: STATE OF VT/AOT PROGRAM DEVELOPMENT
Project No: ----
Drawings: STATE OF VT/AOT PROPOSED IMPROVEMENT BRIDGE PROJECT, TOWN OF RICHFORD SHEETS 1,2,4,22,23,24 OF 36
Specifications: STANDARD SPECIFICATIONS FOR CONSTRUCTION DATED 2011
Other: ----

CSI
Concrete Systems Inc.
9 Commercial St., Hudson, NH,03051
Phone 603-889-4163
Fax 603-889-2417

STATE AGENCY
VTrans

Drawn By R. YEAGER	Date 16APR2015	
Reviewed By B. KOLAWOLE	Date	
Approved By	Date	

G.W. TATRO CONSTRUCTION, INC.
VT/AOT BRIDGE REPLACEMENT– ROAD IMPROVEMENT
RICHFORD, VT.

C — SHOP DRAWING F4 — REV 0
Drawing No. C22312–F4
Quantity: 1 — Project No: BRF030229 — SHEET 12 OF 13

Stamp for structural design only

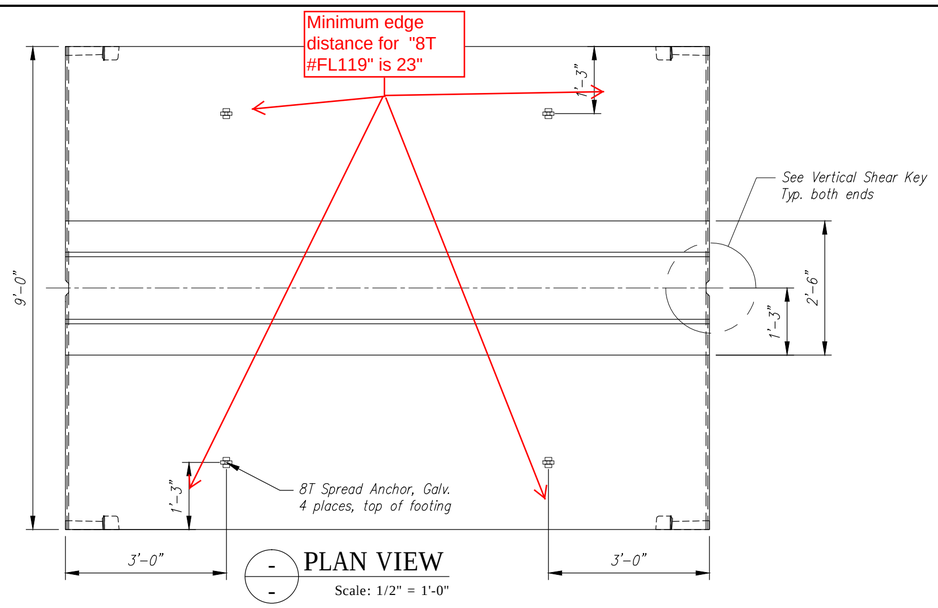

PLAN VIEW
Scale: 1/2" = 1'-0"

QUANTITY = 1
WEIGHT = 22.66 TONS

FOOTING SLAB - F5 - BILL OF MATERIALS / EMBEDS				
CSI ID#	DESCRIPTION	QTY	UM	COMMENTS
EM-00078	8T SPREAD ANCHOR #FL119/P94	4	EA	
EM-00125	BOLT POCKET PLATE (GALVANIZED)	4	EA	
RM-00013	REBAR #4 BLACK- GR 60	445	LB	
RM-00015	REBAR #5 BLACK-GR 60 40'	383	LB	
MX-FA5000SC30	MIX DESIGN - FLY ASH 5000 SELF CONSOLIDATING	7.86	CY	
FOOTING PEDESTAL - F5 - BILL OF MATERIALS / EMBEDS				
RM-00013	REBAR #4 BLACK- GR 60	147	LB	

+concrete mix

Ftg. Slab - F5 Rebar Schedule			
MK		QTY	LENGTH
401	#4	30	12 '- 0 "
402	#4	26	11 '- 9 "
501	#5	58	6 '- 4 "

Ftg. Pedestal-F5 Rebar Schedule			
MK		QTY	LENGTH
402	#4	17	11 '- 9 "
403	#4	12	1 '- 8 "

Vermont Agency of Transportation
RECEIVED
Arch Submittal CSI-4_24_15_rejected.pdf
CK'D BY FDB OK'D BY HIS
April 24, 2015
RESUBMIT YES Rejected
BY Carolyn Carlson DATE 5/6/2015

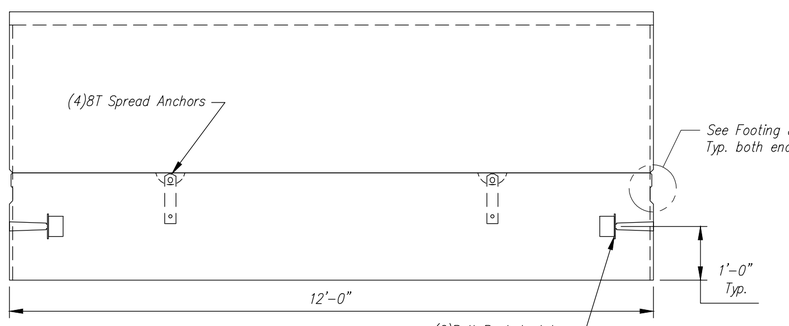

ELEVATION
Scale: 1/2" = 1'-0"

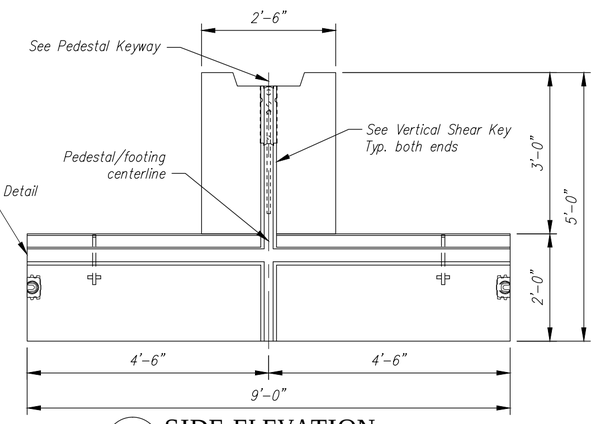

SIDE ELEVATION
Scale: 1/2" = 1'-0"

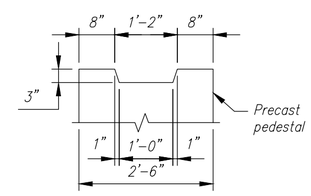

PEDESTAL KEYWAY
Scale: N.T.S.

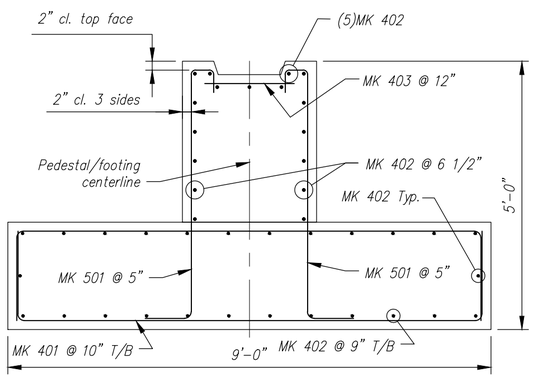

REINFORCING DETAIL
Scale: N.T.S.

See Sheet F1

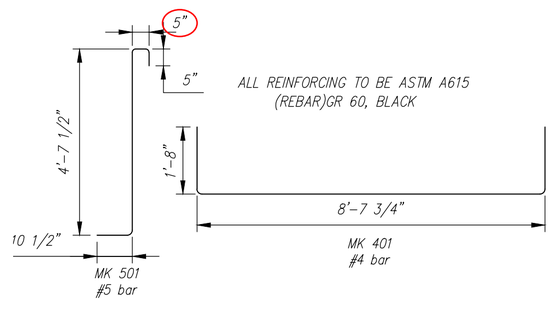

BENDING SCHEDULE
Scale: N.T.S.

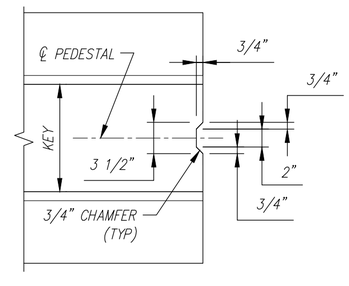

VERTICAL SHEAR KEY
Scale: N.T.S.

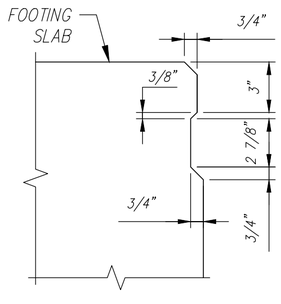

JOINT DETAIL
Scale: N.T.S.

Rev.	Date	DESCRIPTION	By
10			
9			
8			
7			
6			
5			
4			
3			
2			
1			

REVISIONS

Contractor is to verify that all information shown on drawings has been thoroughly checked, complies with the contract documents, is adequate to meet the field conditions. Some dimensions and details may differ slightly from contract drawings to accommodate the manufacturing or design process. Approval of this drawing indicates that any deviation from the contract documents has been reviewed and found to be acceptable. Production will not commence until receipt of signed, approved shop drawings.

This drawing contains information proprietary to CONCRETE SYSTEMS, INC. This drawing is disclosed with the understanding that it will be retained in confidence and its use limited solely to the purpose for which it is disclosed. It is understood that no reproduction of this drawing is authorized without permission from CONCRETE SYSTEMS, INC. and that it will be returned to CONCRETE SYSTEMS, INC. upon request.

Stamp for structural design only

This drawing is based upon information provided from the following documents and/or sources:

Engineer: STATE OF VT/AOT PROGRAM DEVELOPMENT
Project No: ----
Drawings: STATE OF VT/AOT PROPOSED IMPROVEMENT BRIDGE PROJECT, TOWN OF RICHFORD SHEETS 1,2,4,22,23,24 OF 36
Specifications: STANDARD SPECIFICATIONS FOR CONSTRUCTION DATED 2011

Other: ----

CSI
Concrete Systems Inc.
9 Commercial St., Hudson, NH,03051
Phone 603-889-4163
Fax 603-889-2417

STATE AGENCY
VTrans Working to Get You There

Drawn By R. YEAGER	Date 16APR2015	
Reviewed By B. KOLAWOLE	Date	
Approved By	Date	

G.W. TATRO CONSTRUCTION, INC.
VT/AOT BRIDGE REPLACEMENT– ROAD IMPROVEMENT
RICHFORD, VT.

C | Drawing No. SHOP DRAWING F5 | REV 0
C22312–F5
Quantity: 2 | Project No: BRF030229 | SHEET 13 OF 13

Vermont Agency of Transportation
RECEIVED
Arch Submittal CSI 4_24_15_rejected.pdf
CK'D BY FDB OK'D BY HIS
April 24, 2015
RESUBMIT YES Rejected
BY Carolyn Carlson DATE 5/6/2015

CSI GROUP OF COMPANIES

DESIGN CALCULATIONS FOR PRECAST CONCRETE 3 SIDED CULVERT

PROPOSED IMPROVEMENT
ROUTE TH3 BRIDGE #6
RICHMOND, VT

G W TATRO CONSTRUCTION

CONCRETE SYSTEMS, INC.
9 COMMERCIAL STREET
HUDSON, NH

CSI Drawing No C22312- LO1

STATE OF VERMONT
CHRISTOPHER M. VICK
NO. 77928
Structural
LICENSED
PROFESSIONAL ENGINEER
4/21/15

TABLE OF CONTENTS

Section #	Description	Total Pages
1	Summary of Design Information	1
2	Mathcad Calculations : 26' x 10' 3-Sided Culvert: HL93, 0.5'-1' Earth Cover	12
3	STAAD Pro Output Fixed: 26' x 10' 3-Sided Culvert: HL93, 0.5'-1' Earth Cover Incl. BM & SF diagrams	39
4	STAAD Pro Output Spring: 26' x 10' 3-Sided Culvert: HL93, 0.5'-1' Earth Cover Incl. BM & SF diagrams	39
5	Mathcad Calculations : Pedestal and Footing	5
6	STAAD Pro Output: 3' high Pedestal Incl. BM & SF diagrams	10
7	CSI LRFD Wing Wall 1 Calculations	17
8	CSI LRFD Wing Wall 2 Calculations	14
9	CSI LRFD Wing Wall 3 Calculations	18
10	CSI LRFD Wing Wall 4 Calculations	14
11	Bridge Load Rating	48
	TOTAL	217

9 Commercial Street Hudson, New Hampshire 03051 Phone (603) 889-4163
Fax Number: Precast Sales (603) 889-0039
Fax Number: Manhole Design and Engineering (603) 598-1344

Section 1

Summary of Design Information

REFERENCES:

AASHTO LRFD Bridge Design Specifications
ASTM C1504 Standard Specifications for Precast Reinforced Concrete 3 Sided Structures for Culverts, Storm Drains and Sewers
ACI 318 Building Code Requirements for Structural Concrete
NPCA Quality Control Manual for Precast Plants
Plans: Proposed Improvement Route TH3 Bridge #6, Richmond VT; sheet 1 of 36 to sheet 36 of 36
Specifications: Section 540: 4 pages

COMPUTER PROGRAMS:

Mathcad
STAAD Pro
CSI LRFD Wing wall Spreadsheet

5000?

DESIGN PARAMETERS:

Concrete:
Design strength f'c = 6000 psi
Unit weight = 150 pcf
Reinforcing:
Yield strength fy = 60,000 psi
Cover to reinforcing = 2" Top of Top Slab; 1.5" elsewhere u.n.o.

Soil: *Unit weight = 140 pcf*
Lateral earth pressure coefficient (max.) = .50
Lateral earth pressure coefficient (min.) = .25

Earth Cover: *0.5' – 1.0'*

Live Load: *HL93*

Vermont Agency of Transportation
RECEIVED
Arch Submittal CSI 4_24_15_rejected.pdf
CK'D BY FDB OK'D BY HIS
April 24, 2015
RESUBMIT YES Rejected
BY Carolyn Carlson DATE 5/6/2015

Section 2
Mathcad Calculations
26’ x 10’ 3-Sided Culvert
HL93, 0.5’-1.0’ Earth Cover

LRFD METHOD

26 ft x 10ft (3 sided - bottom open) HL93; Earth Cover : 0.5ft - 1.0ft

Reference Dwg: C22312-LO1

REFERENCES:

1. **ASTM C1504 Standard Specification for Precast Concrete 3-Sided Culverts,Storm Drains and Sewers;**
2. **AASHTO LRFD Bridge Design Specifications**
3. **Attachment A: STAAD.Pro Computer Output for Culvert; Fixed Support in Global X-Dir. at Joint 2 and Bending Moment & Shear Force Diagrams - HL93**
4. **Attachment B: STAAD.Pro Computer Output for Culvert; Spring Support (200 kips/ft) in Global X-Dir. at Joint 2 and Bending Moment & Shear Force Diagrams - HL93**

DESIGN PARAMETERS:

Confusing in our plans but this should be pavement weight and the depth varying from 10.08" to 8.28"
Maybe more for future?

$\gamma_w := 62.4 \cdot \frac{lbf}{ft^3}$ unit weight of water

$\gamma_c := 150 \cdot \frac{lbf}{ft^3}$ unit weight of concrete

$\gamma_e := 140 \cdot \frac{lbf}{ft^3}$ unit weight of earth

$DE_1 := 0.5 \quad ft$ Depth of earth Cover -Min

$DE_2 := 1.0 \quad ft$ Depth of earth Cover -Max

$DE_{ave} := \frac{DE_1 + DE_2}{2} = 0.75 \quad ft$ Depth of earth Cover -Average

$L_T := 10 \cdot in$ Length of tire contact area -parallel to span

$K_{max} := .5$ max. earth pressure coefficient

$LLDF := 1.10$ factor for distribution of live load with depth of fill

$K_{min} := .25$ min. earth pressure coefficient

Geometry:

$ClearSpan := 26 \cdot ft$ ClearSpan

$ClearRise := 10 \cdot ft$ ClearRise

Member Properties:

$b_v := 12 \cdot in$ design section width

$t_t := 16 \cdot in$ top slab thickness

$t_w := 10 \cdot in$ wall thickness

$L_{Section} := 7.5 \cdot ft$ Section Length

$Span := ClearSpan + t_w = 26.833 \ ft$

$Rise := ClearRise + \left(\frac{t_t}{2}\right) = 10.667 \ ft$

$t_{Min} := \frac{ClearSpan + 10 \cdot ft}{30} = 1.2 \ ft$ Estimate Slab Thickness

AASHTO Table 2.5.2.6.3-1

$F_e := 1 + 0.2 \cdot \frac{DE_{ave} \cdot ft}{ClearSpan + 2 \cdot t_w} = 1.005$ **Soil-Structure Interaction Factor**

AASHTO Eqn 12.11.2.2.1-2

Vermont Agency of Transportation
RECEIVED
Arch Submittal CSI 4_24_15_rejected.pdf
CK'D BY FDB OK'D BY HIS
April 24, 2015
RESUBMIT YES Rejected
BY Carolyn Carlson DATE 5/6/2015

Dead Load: (DL)

$D_{pav} := F_e \cdot \gamma_e \cdot DE_{ave} \cdot ft \cdot 1 \cdot ft = 105.569 \ \frac{lbf}{ft}$ Dead Load

Live Load: Design Truck

Multiple presence factor $M := 1.2$

$F_1 := 8000 \cdot lbf$ Axle load 1 $F_{23} := 32000 \cdot lbf$ Axle load 2 & 3

$Im := 33 \cdot (1.0 - 0.125 \cdot DE_1)$ $Im = 30.938$ Dynamic load allowance $I_i := 1 + \frac{Im}{100} = 1.309$

$I := max(1, I_i)$ $I = 1.309$

$E_{perp} := 96 \cdot in + \left(1.44 \cdot \frac{ClearSpan}{12}\right) = 11.12 \ ft$ Distribution - perpendicular to span

$E_{para} := L_T + (LLDF \cdot DE_1 \cdot in) = 0.879 \ ft$ Distribution - parallel to span

$D := 6 \cdot ft$ Wheel spacing across a Design truck $D1 := 14 \cdot ft$ Typical Axle spacing

$P1 := \frac{M \cdot I \cdot F_1 \cdot ft}{E_{perp}} = (1.13 \cdot 10^3) \ lbf$ $P2 := \frac{M \cdot I \cdot F_{23} \cdot ft}{E_{perp}} = (4.522 \cdot 10^3) \ lbf$

$P3 := \frac{M \cdot I \cdot F_{23} \cdot ft}{E_{perp}} = (4.522 \cdot 10^3) \ lbf$

Live Load: Design Tandem

$F_{34} := 25000 \cdot lbf$ Axle load 3 & 4 Multiple presence factor $M := 1.2$

$Im := 33 \cdot (1.0 - 0.125 \cdot DE_1)$ $Im = 30.938$ Dynamic load allowance $I_i := 1 + \frac{Im}{100} = 1.309$

$I := max(1, I_i)$ $I = 1.309$

$E_{perp} := 96 \cdot in + \left(1.44 \cdot \frac{ClearSpan}{12}\right) = 11.12 \ ft$ Distribution - perpendicular to span

$E_{para} := L_T + (LLDF \cdot DE_1 \cdot in) = 0.879 \ ft$ Distribution - parallel to span

$D := 6 \cdot ft$ Wheel spacing across a Design tandem

$P3 := \frac{M \cdot I \cdot F_{34} \cdot ft}{E_{perp}} = (3.532 \cdot 10^3) \ lbf$ $D3 := 4 \cdot ft$ Distance between Axles of a Design tandem

Live Load: Design Lane load

Applicable only if Span is greater than 15ft

$W_{10} := 640 \cdot \frac{lbf}{ft}$ Design Lane load over 10 ft width $W_1 := \frac{W_{10}}{10} = 64 \frac{lbf}{ft}$ Lane Load

Lateral Earth Pressure:

$H1 := DE_2 \cdot ft + t_t = 2.333\ ft$ soil depth at top of wall

$H2 := H1 + ClearRise = 12.333\ ft$ soil depth at bottom of wall

$LEPMIN := K_{min} \cdot \gamma_e \cdot 1 \cdot ft = 35 \frac{lbf}{ft^2}$ minimum lateral earth pressure

$LEPMAX := K_{max} \cdot \gamma_e \cdot 1 \cdot ft = 70 \frac{lbf}{ft^2}$ maximum lateral earth pressure

Minimum **(EMIN)** top of wall bottom of wall

$w_{et} := H1 \cdot LEPMIN = 81.667 \frac{lbf}{ft}$ $w_{eb} := H2 \cdot LEPMIN = 431.667 \frac{lbf}{ft}$

Maximum **(EMAX)**

$w_{et} := H1 \cdot LEPMAX = 163.333 \frac{lbf}{ft}$ $w_{eb} := H2 \cdot LEPMAX = 863.333 \frac{lbf}{ft}$

Approaching Wheel Load (Surcharge) : (AWL)

$w_a := (3.0 \cdot ft) \cdot \gamma_e \cdot ft \cdot K_{max} = 210 \frac{lbf}{ft}$

Internal Fluid Pressure: (IFP)

$w_{ib} := \gamma_w \cdot ClearRise \cdot 1 \cdot ft = 624 \frac{lbf}{ft}$ bottom of wall

Design Load Combinations:

The following load combinations are considered:

1. *DEFLECTION CHECK (Load Cases 600):*
   1.0LL + 1.0Emin
2. *Spring check (Load Cases 500):*
   1.0DL +1.0LL

STRENGTH I

3. *For the Maximum Moments & Forces in the Culvert:*

   - *1.35 DL+ 1.75LL + 1.35Emax+1.75AWL - For Max. Outside the Culvert (Negative) Moment in the walls and slab) - Load Cases 100's;*
   - *1.35 DL+ 1.75LL + 1.0Emin+1.0Wins - For Max. Inside of the Culvert (Positive) Moment in the slab -- Load Cases 200's.*

4. *Cracking Load Combinations:*

   - *1.0 DL+ 1.0LL + 1.0Emax+1.0AWL - For Max. Outside the Culvert (Negative) Moment in the walls and slab) - Load Cases 300's;*
   - *1.0 DL+ 1.0LL + 1.0Emin+1.0Wins - For Max. Inside of the Culvert (Positive) Moment in the slab - Load Cases 400's.*

Where,

- *DL - Dead Load;*
- *LL - Live Load;*
- *E - Soil Pressure Load;*
- *AWL - Approaching Wheel Load (Surcharge);*
- *Wins - Inside Water Pressure Load.*

STAAD.Pro ANALYSIS RESULTS:

$t := t_t$ top slab thickness

Att. No	X-Dir. Support Conditions kips/ft	Max. Support Displ.	Top Slab Negative (Outs. Face) Moment	Top Slab Positive (Ins. Face) Moment
"A":	Fixed	$d := 0 \cdot in$	$M1_{F93} := 41.22 \cdot ft \cdot kip$	$M2_{F93} := 82.27 \cdot ft \cdot kip$
"B":	Spring	$d := 0.124 \cdot in$	$M1_{S93} := 43.16 \cdot ft \cdot kip$	$M2_{S93} := 86.20 \cdot ft \cdot kip$

X-Dir. Support Conditions kips/ft	Wall Negative (Outs. Face) Moment	Wall Shear	Top Slab Shear
Fixed	$M3_{F93} := 40.78 \cdot ft \cdot kip$	$Vw_{F93} := 8.59 \cdot kip$	$Vs_{F93} := 18.52 \cdot kip$
Spring	$M3_{S93} := 42.60 \cdot ft \cdot kip$	$Vw_{S93} := 8.77 \cdot kip$	$Vs_{S93} := 18.52 \cdot kip$

$M_{uSN} := max(M1_{F93}, M1_{S93}) = (4.316 \cdot 10^4)\ ft \cdot lbf$ Max Negative Moment in Top Slab

$M_{uSP} := max(M2_{F93}, M2_{S93}) = (8.62 \cdot 10^4)\ ft \cdot lbf$ Max Positive Moment in Top Slab

$M_{uW} := max(M3_{F93}, M3_{S93}) = (4.26 \cdot 10^4)\ ft \cdot lbf$ Max Negative Moment in Wall

$V_{uW} := max(Vw_{F93}, Vw_{S93}) = 8.77\ kip$ Max Shear in Wall

$V_{uS} := max(Vs_{F93}, Vs_{S93}) = 18.52\ kip$ Max Shear in Top Slab

TOP SLAB, BOTTOM REINFORCEMENT; Members 3 & 4:

Shear Capacity

$f_c := 5\ ksi$ $c := 1.5 \cdot in$ rebar clear distance $d_b := 0.875 \cdot in$ bar diameter

$d_{v1} := 0.9 \cdot d = 12.656\ in$ $d := t - c - \frac{d_b}{2} = 14.063\ in$ $\beta := 2$

$d_{v2} := 0.72 \cdot t = 11.52\ in$ $d_v := max(d_{v1}, d_{v2}) = 12.656\ in$

$\phi V_c := .9 \cdot .0316 \cdot \beta \cdot \sqrt{f_c} \cdot ksi \cdot b_v \cdot d_v = (1.932 \cdot 10^4)\ lbf$ $V_{uS} = (1.852 \cdot 10^4)\ lbf$

$if(\phi V_c > V_{uS}, \text{"OK"}, \text{"NG See further analysis below"}) = \text{"OK"}$

Minimum, Temperature and Shrinkage Reinforcement:

Check Minimum Reinforcement, Ratio of Reinforcement Area to GROSS Concrete Area:

***** 3-Sided Culvert - AASHTO 12.14.5.8**
Ast/Agross = 0.002:
Primary reinforcement in the direction of the span, at all cross sections subject to flexural tension, at the inside face of walls, and in each direction at the top of the slabs if cover <2ft.;

$A_{sMin} := 12 \cdot in \cdot t \cdot 0.002 = 0.384\ in^2$

Positive (Inside Face) Moment:

$A_s := 1.8 \cdot in^2$ **Selected Steel Area; Use #7 @ 4in As = 1.8in^2**

$f_c := 5000\ psi$

$SpacingUsed := 4$ Spacing

$f_y := 60000$

$a := \frac{A_s \cdot f_y}{.85 \cdot f_c \cdot 12 \cdot in} = 2.118\ in$

$f_y := 60000 \cdot psi$

$\phi M_n := .95 \cdot A_s \cdot f_y \cdot \left(d - \frac{a}{2}\right) = \left(1.112 \cdot 10^5\right)\ ft \cdot lbf$

$M_{uSP} = \left(8.62 \cdot 10^4\right)\ ft \cdot lbf$

$if\left(\phi M_n > M_{uSP}, \text{"OK"}, \text{"NG"}\right) = \text{"OK"}$

AASHTO Crack Control: Top Slab (Critical Ms)

***** Culvert - AASHTO 5.7.3.4 & 12.14.5.7**

$M_s := 53830 \cdot ft \cdot lbf$ Service Load Moment

$N_s := 1940 \cdot lbf$ Axial thrust at Service limit state (Value Concurrent with Ms)

$e := \frac{M_s}{N_s} + \left(d - \frac{t}{2}\right) = 339.032\ in$

$j := 0.74 + 0.1 \cdot \left(\frac{e}{d}\right) = 3.151$

$j_{max} := .9$

$j1 := min\left(j, j_{max}\right)$

$j1 = 0.9$

$i := \frac{1}{1 - \frac{j1 \cdot d}{e}} = 1.039$

$f_s := \frac{M_s + N_s \cdot \left(d - \frac{t}{2}\right)}{A_s \cdot j1 \cdot i \cdot d} = \left(2.779 \cdot 10^4\right)\ psi$ Reinforcement stress under service load condition

$d_c := c + \frac{d_b}{2} = 1.938\ in$

$\gamma_e := 0.75$ Class 2 Exposure factor

$$\beta_s := 1 + \frac{d_c}{0.7 \cdot (t - d_c)} = 1.197$$

$$Spacing := \frac{700 \cdot \gamma_e}{\beta_s \cdot \frac{f_s}{ksi}} - 2 \cdot \frac{d_c}{in} = 11.908$$

$$if(Spacing > SpacingUsed, \text{"OK"}, \text{"NG"}) = \text{"OK"}$$

AASHTO Crack Control: Top Slab (Critical Ns)

*** Culvert - AASHTO 5.7.3.4 & 12.14.5.7

$N_s := 5770 \cdot lbf$ Axial thrust at Service limit state

$M_s := 43790 \cdot ft \cdot lbf$ Service Load Moment (Value Concurrent with Ns)

$$e := \frac{M_s}{N_s} + \left(d - \frac{t}{2}\right) = 97.134\ in$$

$$j := 0.74 + 0.1 \cdot \left(\frac{e}{d}\right) = 1.431 \qquad j_{max} := .9 \qquad j1 := min(j, j_{max}) \qquad j1 = 0.9$$

$$i := \frac{1}{1 - \frac{j1 \cdot d}{e}} = 1.15$$

$$f_s := \frac{M_s + N_s \cdot \left(d - \frac{t}{2}\right)}{A_s \cdot j1 \cdot i \cdot d} = \left(2.14 \cdot 10^4\right)\ psi$$

Reinforcement stress under service load condition

$$d_c := c + \frac{d_b}{2} = 1.938\ in$$

$\gamma_e := 0.75$ Class 2 Exposure factor

$$\beta_s := 1 + \frac{d_c}{0.7 \cdot (t - d_c)} = 1.197$$

$$Spacing := \frac{700 \cdot \gamma_e}{\beta_s \cdot \frac{f_s}{ksi}} - 2 \cdot \frac{d_c}{in} = 16.627$$

$$if(Spacing > SpacingUsed, \text{"OK"}, \text{"NG"}) = \text{"OK"}$$

Top Slab: Bottom Distribution Reinforcement:

*** - AASHTO 9.7.3.2; $DE_2 = 1$

Bottom Steel Req'd:

$Ws := Span$

$$P_{sd} := \frac{100}{Ws^{.5}} \cdot ft^{.5} = 19.305 \qquad P_{max} := 50$$

If the main reinforcement parallel to the traffic;

$A_{sd} := \frac{P}{100} \cdot A_s = 0.347\ in^2$ $\qquad P := min(P_{sd}, P_{max})$

Walls: Members 1 & 2

Shear Capacity

$f_c := 5\ ksi$ $\quad c := 1.5 \cdot in$ rebar clear distance $\qquad d_b := 0.875 \cdot in$ bar diameter

$d := t_w - c - \frac{d_b}{2}$ $\qquad d = 8.063\ in$ $\qquad \beta := 2$

$d_{v1} := 0.9 \cdot d = 7.256\ in$

$d_{v2} := 0.72 \cdot t_w = 7.2\ in$ $\qquad d_v := max(d_{v1}, d_{v2}) = 7.256\ in$

$\phi V_c := 0.9 \cdot .0316 \cdot \beta \cdot \sqrt{f_c} \cdot ksi \cdot b_v \cdot d_v = (1.107 \cdot 10^4)\ lbf$ $\qquad V_{uW} = (8.77 \cdot 10^3)\ lbf$

1

$if(\phi V_c > V_{uW}, "OK", "NG") = "OK"$

Minimum Reinforcement:

Check Minimum Reinforcement, Ratio of Reinforcement Area to GROSS Concrete Area:

***** 3-Sided Culvert - AASHTO 12.14.5.8**
Ast/Agross = 0.002:
Primary reinforcement in the direction of the span, at all cross sections subject to flexural tension, at the inside face of walls, and in each direction at the top of the slabs if cover <2ft.;

$A_{sMin} := 12 \cdot in \cdot t_w \cdot 0.002 = 0.24\ in^2$

Negative (Outside Face) Moment
(Use the Same Reinforcement as in the Top Slab:

$A_s := 1.44 \cdot in^2$ **Selected Steel Area; Use #7 @ 5in As= 1.44in^2** $\qquad SpacingUsed := 5$ Spacing

$f_c := 5000\ psi$

$f_y := 60000$ $\qquad a := \frac{A_s \cdot f_y}{.85 \cdot f_c \cdot 12 \cdot in} = 1.694\ in$ $\qquad f_y := 60000 \cdot psi$

$\phi M_n := .95 \cdot A_s \cdot f_y \cdot \left(d - \frac{a}{2}\right) = (4.935 \cdot 10^4)\ ft \cdot lbf$ $\qquad M_{uW} = (4.26 \cdot 10^4)\ ft \cdot lbf$

$if(\phi M_n > M_{uW}, "OK", "NG") = "OK"$

AASHTO Crack Control: Wall (Critical Ms)

***** Culvert - AASHTO 5.7.3.4 & 12.14.5.7**

$M_s := 27370 \cdot ft \cdot lbf$ Service Load Moment

$N_s := 8180 \cdot lbf$ Axial thrust at Service limit state (Value Concurrent with Ms)

$$e := \frac{M_s}{N_s} + \left(d - \frac{t}{2}\right) = 40.214\ in$$

$$j := 0.74 + 0.1 \cdot \left(\frac{e}{d}\right) = 1.239 \qquad j_{max} := .9 \qquad j1 := min\left(j, j_{max}\right) \qquad j1 = 0.9$$

$$i := \frac{1}{1 - \frac{j1 \cdot d}{e}} = 1.22$$

$$f_s := \frac{M_s + N_s \cdot \left(d - \frac{t}{2}\right)}{A_s \cdot j1 \cdot i \cdot d} = \left(2.58 \cdot 10^4\right)\ psi$$

Reinforcement stress under service load condition

$$d_c := c + \frac{d_b}{2} = 1.938\ in$$

$$\gamma_e := 0.75$$

Class 2 Exposure factor

$$\beta_s := 1 + \frac{d_c}{0.7 \cdot \left(t - d_c\right)} = 1.197$$

$$Spacing := \frac{700 \cdot \gamma_e}{\beta_s \cdot \frac{f_s}{ksi}} - 2 \cdot \frac{d_c}{in} = 13.127$$

$$if\left(Spacing > SpacingUsed, \text{“OK”}, \text{“NG”}\right) = \text{“OK”}$$

AASHTO Crack Control: Wall (Critical Ns)

***** Culvert - AASHTO 5.7.3.4 & 12.14.5.7**

$$N_s := 11490 \cdot lbf$$

Axial thrust at Service limit state

$$M_s := 24080 \cdot ft \cdot lbf$$

Service Load Moment (Value Concurrent with Ns)

$$e := \frac{M_s}{N_s} + \left(d - \frac{t}{2}\right) = 25.211\ in$$

$$j := 0.74 + 0.1 \cdot \left(\frac{e}{d}\right) = 1.053 \qquad j_{max} := .9 \qquad j1 := min\left(j, j_{max}\right) \qquad j1 = 0.9$$

$$i := \frac{1}{1 - \frac{j1 \cdot d}{e}} = 1.404$$

$$f_s := \frac{M_s + N_s \cdot \left(d - \frac{t}{2}\right)}{A_s \cdot j1 \cdot i \cdot d} = \left(1.974 \cdot 10^4\right)\ psi$$

Reinforcement stress under service load condition

$d_c := c + \frac{d_b}{2} = 1.938\ in$

$\gamma_e := 0.75$ Class 2 Exposure factor

$\beta_s := 1 + \frac{d_c}{0.7 \cdot (t - d_c)} = 1.197$

$Spacing := \frac{700 \cdot \gamma_e}{\beta_s \cdot \frac{f_s}{ksi}} - 2 \cdot \frac{d_c}{in} = 18.343$

$if(Spacing > SpacingUsed, "OK", "NG") = "OK"$

Inside Wall Face Vertical Reinforcement;

$A_{sMin} := 12 \cdot in \cdot t_w \cdot 0.002 = 0.24\ in^2$ **Use #4 @ 10in ;**

Inside Wall Face Horizontal Reinforcement;

$A_{st} := 12 \cdot in \cdot \frac{t_w}{2} \cdot 0.002 = 0.12\ in^2$ **Use #4 @ 18in ;**

TOP SLAB, TOP REINFORCEMENT; End of Span

- Use the same Reinforcement as in the Wall;

Negative (Outside Face) Moment:

$c := 2.0 \cdot in$ rebar clear distance $d := t - c - \frac{d_b}{2} = 13.563\ in$

$A_s := 1.44 \cdot in^2$ **Selected Steel Area; Use #7 @ 5in As= 1.44in^2** $SpacingUsed := 5$ Spacing

$f_y := 60000$ $a := \frac{A_s \cdot f_y}{.85 \cdot f_c \cdot 12 \cdot in} = 1.694\ in$ $f_c := 5000\ psi$

$f_y := 60000 \cdot psi$

$\phi M_n := .95 \cdot A_s \cdot f_y \cdot \left(d - \frac{a}{2}\right) = (8.697 \cdot 10^4)\ ft \cdot lbf$ $M_{uSN} = (4.316 \cdot 10^4)\ ft \cdot lbf$

$if(\phi M_n > M_{uSN}, "OK", "NG") = "OK"$

AASHTO Crack Control: Top Slab (Critical Ms)

***** Culvert - AASHTO 5.7.3.4 & 12.14.5.7**

$M_s := 27810 \cdot ft \cdot lbf$ Service Load Moment

$N_s := 5770 \cdot lbf$ Axial thrust at Service limit state (Value Concurrent with Ms)

$e := \frac{M_s}{N_s} + \left(d - \frac{t}{2}\right) = 63.4\ in$

$j := 0.74 + 0.1 \cdot \left(\frac{e}{d}\right) = 1.207$ $\quad j_{max} := .9$ $\quad j1 := min(j, j_{max})$ $\quad j1 = 0.9$

$i := \frac{1}{1 - \frac{j1 \cdot d}{e}} = 1.238$

$f_s := \frac{M_s + N_s \cdot \left(d - \frac{t}{2}\right)}{A_s \cdot j1 \cdot i \cdot d} = (1.681 \cdot 10^4)\ psi$ Reinforcement stress under service load condition

$d_c := c + \frac{d_b}{2} = 2.438\ in$

$\gamma_e := 0.75$ Class 2 Exposure factor

$\beta_s := 1 + \frac{d_c}{0.7 \cdot (t - d_c)} = 1.257$

$Spacing := \frac{700 \cdot \gamma_e}{\beta_s \cdot \frac{f_s}{ksi}} - 2 \cdot \frac{d_c}{in} = 19.983$

$if(Spacing > SpacingUsed, \text{"OK"}, \text{"NG"}) = \text{"OK"}$

AASHTO Crack Control: Wall (Critical Ns)

***** Culvert - AASHTO 5.7.3.4 & 12.14.5.7**

$N_s := 5770 \cdot lbf$ Axial thrust at Service limit state

$M_s := 27810 \cdot ft \cdot lbf$ Service Load Moment (Value Concurrent with Ns)

$e := \frac{M_s}{N_s} + \left(d - \frac{t}{2}\right) = 63.4\ in$

$j := 0.74 + 0.1 \cdot \left(\frac{e}{d}\right) = 1.207$ $\quad j_{max} := .9$ $\quad j1 := min(j, j_{max})$ $\quad j1 = 0.9$

$i := \frac{1}{1 - \frac{j1 \cdot d}{e}} = 1.238$

$f_s := \frac{M_s + N_s \cdot \left(d - \frac{t}{2}\right)}{A_s \cdot j1 \cdot i \cdot d} = (1.681 \cdot 10^4)\ psi$ Reinforcement stress under service load condition

$d_c := c + \frac{d_b}{2} = 2.438\ in$

$\gamma_e := 0.75$ Class 2 Exposure factor

$$\beta_s := 1 + \frac{d_c}{0.7 \cdot (t - d_c)} = 1.257$$

$$Spacing := \frac{700 \cdot \gamma_e}{\beta_s \cdot \frac{f_s}{ksi}} - 2 \cdot \frac{d_c}{in} = 19.983$$

$$if(Spacing > SpacingUsed, \text{"OK"}, \text{"NG"}) = \text{"OK"}$$

Calculate a Cut Off Point:-

Per Moment Envelope Diagram, top Reinforcement is not req'd at a distance of 4.5ft from Culvert Inner corner.

$L_{CutOff} := 4.5 \cdot ft$ $\qquad$ $d_b = 0.875\ in$

Use Max. from a1, a2 & a3 (Refer to Section 5.11.1.2.1):

$a1 := d = 13.563\ in$ $\qquad$ $a2 := 15 \cdot d_b = 13.125\ in$ $\qquad$ $a3 := \frac{Span}{20} = 16.1\ in$

$a := max(a1, a2, a3) = 16.1\ in$

$L_{Bar} := L_{CutOff} + a \cdot 1.7 = 6.781\ ft$ $\qquad$ **Cut #7 Bars (top Reinforcement) @ a distance of LBar from the culvert Inner Corner.**

CHECK DEFLECTION:

Max. Vertical Displacement at Joint 4 from the Load Case #600 (1.0LL):

$Displ_1 := 0.187 \cdot in$ $\qquad$ **- Fixed Support in Global X-Dir. at Joint 4 - HL 93**

$Displ_2 := 0.186 \cdot in$ $\qquad$ **- Spring Support in Global X-Dir. at Joint 4 - HL 93**

$Displ := max(Displ_1, Displ_2) = 0.187\ in$

Allowable Displacement: 1/800 of Span Length

$$AllowDispl := \frac{Span}{800} = 0.403\ in$$

$$if(AllowDispl > Displ, \text{"OK"}, \text{"NG"}) = \text{"OK"}$$

Section 3
STAAD Pro Output Fixed
26’ x 10’ 3-Sided Culvert: HL93
0.5’-1’ Earth Cover Incl. BM & SF diagrams

```
****************************************************
*                                                  *
*           STAAD.Pro V8i SELECTseries5            *
*           Version  20.07.10.65                   *
*           Proprietary Program of                 *
*           Bentley Systems, Inc.                  *
*           Date=    APR  1, 2015                  *
*           Time=     9:50:47                      *
*                                                  *
*      USER ID:                                    *
****************************************************
```

```
     1. STAAD SPACE
INPUT FILE: 26x10-HL93-fixed.STD
     2. START JOB INFORMATION
     3. ENGINEER DATE 03/16/15
     4. ENGINEER NAME BK
     5. END JOB INFORMATION
     6. INPUT WIDTH 79
     7. UNIT FEET KIP
     8. JOINT COORDINATES
     9. 1 -13.415 0 0; 2 13.415 0 0; 3 -13.415 10.666 0; 4 0 10.666 0
    10. 5 13.415 10.666 0
    11. MEMBER INCIDENCES
    12. 1 1 3; 2 2 5; 3 3 4; 4 5 4
    13. DEFINE MATERIAL START
    14. ISOTROPIC CONCRETE5000
    15. E 580390
    16. POISSON 0.17
    17. DENSITY 0.15
    18. ALPHA 5.5E-006
    19. DAMP 0.05
    20. END DEFINE MATERIAL
    21. MEMBER PROPERTY AMERICAN
    22. 1 2 PRIS YD 0.83 ZD 1
    23. 3 4 PRIS YD 1.33 ZD 1
    24. CONSTANTS
    25. MATERIAL CONCRETE5000 ALL
    26. SUPPORTS
    27. 1 FIXED BUT MZ
    28. 2 FIXED BUT MZ
    29. MEMBER OFFSET
    30. 3 START 0.415 0 0
    31. 4 START -0.415 0 0
    32. 1 END 0 -0.666 0
    33. 2 END 0 -0.666 0
    34. DEFINE MOVING LOAD
    35. ***TRUCK
    36. TYPE 1 LOAD 1.13 4.522 4.522
    37. DIST 14 14
    38. ***TANDEM
```

```
 39. TYPE 2 LOAD 3.532 3.532
 40. DIST 4
 41. ***
 42. LOAD 1 LOADTYPE NONE  TITLE LOAD CASE 1- UNIFORM LOAD -COVER 1.0FT
 43. MEMBER LOAD
 44. 3 4 UNI GY -0.106
 45. SELFWEIGHT Y -1
 46. LOAD 2 LOADTYPE NONE  TITLE -EMAX
 47. MEMBER LOAD
 48. 2 TRAP GX -0.863 -0.163
 49. 1 TRAP GX 0.863 0.163
 50. LOAD 3 LOADTYPE NONE  TITLE -EMIN
 51. MEMBER LOAD
 52. 2 TRAP GX -0.432 -0.082
 53. 1 TRAP GX 0.432 0.082
 54. LOAD 4 LOADTYPE NONE  TITLE -AWL
 55. MEMBER LOAD
 56. 2 UNI GX -0.21
 57. 1 UNI GX 0.21
 58. LOAD 5 LOADTYPE NONE  TITLE -IPF-WATER INSIDE
 59. MEMBER LOAD
 60. 2 TRAP GX 0.624 0 0
 61. 1 TRAP GX -0.624 0 0
 62. LOAD 6 LOADTYPE NONE  TITLE LOAD CASE LANE
 63. MEMBER LOAD
 64. 3 4 UNI GY -0.064
 65. LOAD 10 LOADTYPE LIVE  TITLE LOAD CASE TRUCK
 66. LOAD GENERATION 12
 67. TYPE 1 -41.415 10.666 0 XINC 2
 68. LOAD 30 LOADTYPE LIVE  TITLE LOAD CASE TANDEM
**WARNING-A MOVING LOAD THAT WOULD HAVE BEEN APPLIED BEYOND THE X AND Z RANGES
          OF THE STRUCTURE HAS BEEN IGNORED. CASE=   11 WHEEL   1 OF   3
**WARNING-A MOVING LOAD THAT WOULD HAVE BEEN APPLIED BEYOND THE X AND Z RANGES
          OF THE STRUCTURE HAS BEEN IGNORED. CASE=   11 WHEEL   2 OF   3
**WARNING-A MOVING LOAD THAT WOULD HAVE BEEN APPLIED BEYOND THE X AND Z RANGES
          OF THE STRUCTURE HAS BEEN IGNORED. CASE=   12 WHEEL   1 OF   3
**WARNING-A MOVING LOAD THAT WOULD HAVE BEEN APPLIED BEYOND THE X AND Z RANGES
          OF THE STRUCTURE HAS BEEN IGNORED. CASE=   12 WHEEL   2 OF   3
**WARNING-A MOVING LOAD THAT WOULD HAVE BEEN APPLIED BEYOND THE X AND Z RANGES
          OF THE STRUCTURE HAS BEEN IGNORED. CASE=   13 WHEEL   1 OF   3
**WARNING-A MOVING LOAD THAT WOULD HAVE BEEN APPLIED BEYOND THE X AND Z RANGES
          OF THE STRUCTURE HAS BEEN IGNORED. CASE=   13 WHEEL   2 OF   3
**WARNING-A MOVING LOAD THAT WOULD HAVE BEEN APPLIED BEYOND THE X AND Z RANGES
          OF THE STRUCTURE HAS BEEN IGNORED. CASE=   14 WHEEL   1 OF   3
**WARNING-A MOVING LOAD THAT WOULD HAVE BEEN APPLIED BEYOND THE X AND Z RANGES
          OF THE STRUCTURE HAS BEEN IGNORED. CASE=   14 WHEEL   2 OF   3
**WARNING-A MOVING LOAD THAT WOULD HAVE BEEN APPLIED BEYOND THE X AND Z RANGES
          OF THE STRUCTURE HAS BEEN IGNORED. CASE=   15 WHEEL   1 OF   3
**WARNING-A MOVING LOAD THAT WOULD HAVE BEEN APPLIED BEYOND THE X AND Z RANGES
          OF THE STRUCTURE HAS BEEN IGNORED. CASE=   15 WHEEL   2 OF   3
*ADDITIONAL MOVING LOAD MESSAGES SUPPRESSED
*ADDITIONAL MOVING LOAD MESSAGES SUPPRESSED
 69. LOAD GENERATION 9
 70. TYPE 2 -17.415 10.666 0 XINC 2
 71. ***TRUCK
 72. LOAD COMB 100 COMBINATION LOAD CASE -MAX MOMENT OUTSIDE
```

```
 73. 11 1.75 6 1.75 1 1.35 2 1.35 4 1.75
 74. LOAD COMB 101 COMBINATION LOAD CASE
 75. 12 1.75 6 1.75 1 1.35 2 1.35 4 1.75
 76. LOAD COMB 102 COMBINATION LOAD CASE
 77. 13 1.75 6 1.75 1 1.35 2 1.35 4 1.75
 78. LOAD COMB 103 COMBINATION LOAD CASE
 79. 14 1.75 6 1.75 1 1.35 2 1.35 4 1.75
 80. LOAD COMB 104 COMBINATION LOAD CASE
 81. 15 1.75 6 1.75 1 1.35 2 1.35 4 1.75
 82. LOAD COMB 105 COMBINATION LOAD CASE
 83. 16 1.75 6 1.75 1 1.35 2 1.35 4 1.75
 84. LOAD COMB 106 COMBINATION LOAD CASE
 85. 17 1.75 6 1.75 1 1.35 2 1.35 4 1.75
 86. LOAD COMB 107 COMBINATION LOAD CASE
 87. 18 1.75 6 1.75 1 1.35 2 1.35 4 1.75
 88. LOAD COMB 108 COMBINATION LOAD CASE
 89. 19 1.75 6 1.75 1 1.35 2 1.35 4 1.75
 90. LOAD COMB 109 COMBINATION LOAD CASE
 91. 20 1.75 6 1.75 1 1.35 2 1.35 4 1.75
 92. LOAD COMB 110 COMBINATION LOAD CASE
 93. 21 1.75 6 1.75 1 1.35 2 1.35 4 1.75
 94. LOAD COMB 111 COMBINATION LOAD CASE
 95. 22 1.75 6 1.75 1 1.35 2 1.35 4 1.75
 96. ***
 97. LOAD COMB 200 COMBINATION LOAD CASE -MAX MOMENT INSIDE
 98. 11 1.75 6 1.75 1 1.35 2 0.5 5 1.0
 99. LOAD COMB 201 COMBINATION LOAD CASE
100. 12 1.75 6 1.75 1 1.35 2 0.5 5 1.0
101. LOAD COMB 202 COMBINATION LOAD CASE
102. 13 1.75 6 1.75 1 1.35 2 0.5 5 1.0
103. LOAD COMB 203 COMBINATION LOAD CASE
104. 14 1.75 6 1.75 1 1.35 2 0.5 5 1.0
105. LOAD COMB 204 COMBINATION LOAD CASE
106. 15 1.75 6 1.75 1 1.35 2 0.5 5 1.0
107. LOAD COMB 205 COMBINATION LOAD CASE
108. 16 1.75 6 1.75 1 1.35 2 0.5 5 1.0
109. LOAD COMB 206 COMBINATION LOAD CASE
110. 17 1.75 6 1.75 1 1.35 2 0.5 5 1.0
111. LOAD COMB 207 COMBINATION LOAD CASE
112. 18 1.75 6 1.75 1 1.35 2 0.5 5 1.0
113. LOAD COMB 208 COMBINATION LOAD CASE
114. 19 1.75 6 1.75 1 1.35 2 0.5 5 1.0
115. LOAD COMB 209 COMBINATION LOAD CASE
116. 20 1.75 6 1.75 1 1.35 2 0.5 5 1.0
117. LOAD COMB 210 COMBINATION LOAD CASE
118. 21 1.75 6 1.75 1 1.35 2 0.5 5 1.0
119. LOAD COMB 211 COMBINATION LOAD CASE
120. 22 1.75 6 1.75 1 1.35 2 0.5 5 1.0
121. ***
122. LOAD COMB 300 COMBINATION LOAD CASE -CRACK CONTROL-MAX OUTSIDE
123. 11 1.0 6 1.0 1 1.0 2 1.0 4 1.0
124. LOAD COMB 301 COMBINATION LOAD CASE
125. 12 1.0 6 1.0 1 1.0 2 1.0 4 1.0
126. LOAD COMB 302 COMBINATION LOAD CASE
127. 13 1.0 6 1.0 1 1.0 2 1.0 4 1.0
128. LOAD COMB 303 COMBINATION LOAD CASE
```

```
129. 14 1.0 6 1.0 1 1.0 2 1.0 4 1.0
130. LOAD COMB 304 COMBINATION LOAD CASE
131. 15 1.0 6 1.0 1 1.0 2 1.0 4 1.0
132. LOAD COMB 305 COMBINATION LOAD CASE
133. 16 1.0 6 1.0 1 1.0 2 1.0 4 1.0
134. LOAD COMB 306 COMBINATION LOAD CASE
135. 17 1.0 6 1.0 1 1.0 2 1.0 4 1.0
136. LOAD COMB 307 COMBINATION LOAD CASE
137. 18 1.0 6 1.0 1 1.0 2 1.0 4 1.0
138. LOAD COMB 308 COMBINATION LOAD CASE
139. 19 1.0 6 1.0 1 1.0 2 1.0 4 1.0
140. LOAD COMB 309 COMBINATION LOAD CASE
141. 20 1.0 6 1.0 1 1.0 2 1.0 4 1.0
142. LOAD COMB 310 COMBINATION LOAD CASE
143. 21 1.0 6 1.0 1 1.0 2 1.0 4 1.0
144. LOAD COMB 311 COMBINATION LOAD CASE
145. 22 1.0 6 1.0 1 1.0 2 1.0 4 1.0
146. ***
147. LOAD COMB 400 COMBINATION LOAD CASE -CRACK CONTROL-MAX INSIDE
148. 11 1.0 3 1.0 1 1.0 6 1.0 5 1.0
149. LOAD COMB 401 COMBINATION LOAD CASE
150. 12 1.0 3 1.0 1 1.0 6 1.0 5 1.0
151. LOAD COMB 402 COMBINATION LOAD CASE
152. 13 1.0 3 1.0 1 1.0 6 1.0 5 1.0
153. LOAD COMB 403 COMBINATION LOAD CASE
154. 14 1.0 3 1.0 1 1.0 6 1.0 5 1.0
155. LOAD COMB 404 COMBINATION LOAD CASE
156. 15 1.0 3 1.0 1 1.0 6 1.0 5 1.0
157. LOAD COMB 405 COMBINATION LOAD CASE
158. 16 1.0 3 1.0 1 1.0 6 1.0 5 1.0
159. LOAD COMB 406 COMBINATION LOAD CASE
160. 17 1.0 3 1.0 1 1.0 6 1.0 5 1.0
161. LOAD COMB 407 COMBINATION LOAD CASE
162. 18 1.0 3 1.0 1 1.0 6 1.0 5 1.0
163. LOAD COMB 408 COMBINATION LOAD CASE
164. 19 1.0 3 1.0 1 1.0 6 1.0 5 1.0
165. LOAD COMB 409 COMBINATION LOAD CASE
166. 20 1.0 3 1.0 1 1.0 6 1.0 5 1.0
167. LOAD COMB 410 COMBINATION LOAD CASE
168. 21 1.0 3 1.0 1 1.0 6 1.0 5 1.0
169. LOAD COMB 411 COMBINATION LOAD CASE
170. 22 1.0 3 1.0 1 1.0 6 1.0 5 1.0
171. ***
172. LOAD COMB 500 COMBINATION LOAD CASE -CHECK SUPPORT DISPL.
173. 11 1.0 6 1.0 1 1.0
174. LOAD COMB 501 COMBINATION LOAD CASE
175. 12 1.0 6 1.0 1 1.0
176. LOAD COMB 502 COMBINATION LOAD CASE
177. 13 1.0 6 1.0 1 1.0
178. LOAD COMB 503 COMBINATION LOAD CASE
179. 14 1.0 6 1.0 1 1.0
180. LOAD COMB 504 COMBINATION LOAD CASE
181. 15 1.0 6 1.0 1 1.0
182. LOAD COMB 505 COMBINATION LOAD CASE
183. 16 1.0 6 1.0 1 1.0
184. LOAD COMB 506 COMBINATION LOAD CASE
```

```
185. 17 1.0 6 1.0 1 1.0
186. LOAD COMB 507 COMBINATION LOAD CASE
187. 18 1.0 6 1.0 1 1.0
188. LOAD COMB 508 COMBINATION LOAD CASE
189. 19 1.0 6 1.0 1 1.0
190. LOAD COMB 509 COMBINATION LOAD CASE
191. 20 1.0 6 1.0 1 1.0
192. LOAD COMB 510 COMBINATION LOAD CASE
193. 21 1.0 6 1.0 1 1.0
194. LOAD COMB 511 COMBINATION LOAD CASE
195. 22 1.0 6 1.0 1 1.0
196. ***
197. LOAD COMB 600 COMBINATION LOAD CASE -CHECK DEFLEC.
198. 11 1.0 6 1.0 3 1.0
199. LOAD COMB 601 COMBINATION LOAD CASE
200. 12 1.0 6 1.0 3 1.0
201. LOAD COMB 602 COMBINATION LOAD CASE
202. 13 1.0 6 1.0 3 1.0
203. LOAD COMB 603 COMBINATION LOAD CASE
204. 14 1.0 6 1.0 3 1.0
205. LOAD COMB 604 COMBINATION LOAD CASE
206. 15 1.0 6 1.0 3 1.0
207. LOAD COMB 605 COMBINATION LOAD CASE
208. 16 1.0 6 1.0 3 1.0
209. LOAD COMB 606 COMBINATION LOAD CASE
210. 17 1.0 6 1.0 3 1.0
211. LOAD COMB 607 COMBINATION LOAD CASE
212. 18 1.0 6 1.0 3 1.0
213. LOAD COMB 608 COMBINATION LOAD CASE
214. 19 1.0 6 1.0 3 1.0
215. LOAD COMB 609 COMBINATION LOAD CASE
216. 20 1.0 6 1.0 3 1.0
217. LOAD COMB 610 COMBINATION LOAD CASE
218. 21 1.0 6 1.0 3 1.0
219. LOAD COMB 611 COMBINATION LOAD CASE
220. 22 1.0 6 1.0 3 1.0
221. LOAD COMB 700 COMBINATION LOAD CASE -LL1
222. 11 1.0 6 1.0
223. LOAD COMB 701 COMBINATION LOAD CASE
224. 12 1.0 6 1.0
225. LOAD COMB 702 COMBINATION LOAD CASE
226. 13 1.0 6 1.0
227. LOAD COMB 703 COMBINATION LOAD CASE
228. 14 1.0 6 1.0
229. LOAD COMB 704 COMBINATION LOAD CASE
230. 15 1.0 6 1.0
231. LOAD COMB 705 COMBINATION LOAD CASE
232. 16 1.0 6 1.0
233. LOAD COMB 706 COMBINATION LOAD CASE
234. 17 1.0 6 1.0
235. LOAD COMB 707 COMBINATION LOAD CASE
236. 18 1.0 6 1.0
237. LOAD COMB 708 COMBINATION LOAD CASE
238. 19 1.0 6 1.0
239. LOAD COMB 709 COMBINATION LOAD CASE
240. 20 1.0 6 1.0
```

```
241. LOAD COMB 710 COMBINATION LOAD CASE
242. 21 1.0 6 1.0
243. LOAD COMB 711 COMBINATION LOAD CASE
244. 22 1.0 6 1.0
245. ***
246. LOAD COMB 800 COMBINATION LOAD CASE -DL
247. 1 1.0 2 1.0 4 1.0
248. ***
249. ***TANDEM
250. LOAD COMB 1000 COMBINATION LOAD CASE -MAX MOMENT OUTSIDE
251. 31 1.75 6 1.75 1 1.35 2 1.35 4 1.75
252. LOAD COMB 1001 COMBINATION LOAD CASE
253. 32 1.75 6 1.75 1 1.35 2 1.35 4 1.75
254. LOAD COMB 1002 COMBINATION LOAD CASE
255. 33 1.75 6 1.75 1 1.35 2 1.35 4 1.75
256. LOAD COMB 1003 COMBINATION LOAD CASE
257. 34 1.75 6 1.75 1 1.35 2 1.35 4 1.75
258. LOAD COMB 1004 COMBINATION LOAD CASE
259. 35 1.75 6 1.75 1 1.35 2 1.35 4 1.75
260. LOAD COMB 1005 COMBINATION LOAD CASE
261. 36 1.75 6 1.75 1 1.35 2 1.35 4 1.75
262. LOAD COMB 1006 COMBINATION LOAD CASE
263. 37 1.75 6 1.75 1 1.35 2 1.35 4 1.75
264. LOAD COMB 1007 COMBINATION LOAD CASE
265. 38 1.75 6 1.75 1 1.35 2 1.35 4 1.75
266. LOAD COMB 1008 COMBINATION LOAD CASE
267. 39 1.75 6 1.75 1 1.35 2 1.35 4 1.75
268. LOAD COMB 2001 COMBINATION LOAD CASE
269. 32 1.75 6 1.75 1 1.35 2 0.5 5 1.0
270. LOAD COMB 2002 COMBINATION LOAD CASE
271. 33 1.75 6 1.75 1 1.35 2 0.5 5 1.0
272. LOAD COMB 2003 COMBINATION LOAD CASE
273. 34 1.75 6 1.75 1 1.35 2 0.5 5 1.0
274. LOAD COMB 2004 COMBINATION LOAD CASE
275. 35 1.75 6 1.75 1 1.35 2 0.5 5 1.0
276. LOAD COMB 2005 COMBINATION LOAD CASE
277. 36 1.75 6 1.75 1 1.35 2 0.5 5 1.0
278. LOAD COMB 2006 COMBINATION LOAD CASE
279. 37 1.75 6 1.75 1 1.35 2 0.5 5 1.0
280. LOAD COMB 2007 COMBINATION LOAD CASE
281. 38 1.75 6 1.75 1 1.35 2 0.5 5 1.0
282. LOAD COMB 2008 COMBINATION LOAD CASE
283. 39 1.75 6 1.75 1 1.35 2 0.5 5 1.0
284. LOAD COMB 3000 COMBINATION LOAD CASE -CRACK CONTROL-MAX OUTSIDE
285. 31 1.0 6 1.0 1 1.0 2 1.0 4 1.0
286. LOAD COMB 3001 COMBINATION LOAD CASE
287. 32 1.0 6 1.0 1 1.0 2 1.0 4 1.0
288. LOAD COMB 3002 COMBINATION LOAD CASE
289. 33 1.0 6 1.0 1 1.0 2 1.0 4 1.0
290. LOAD COMB 3003 COMBINATION LOAD CASE
291. 34 1.0 6 1.0 1 1.0 2 1.0 4 1.0
292. LOAD COMB 3004 COMBINATION LOAD CASE
293. 35 1.0 6 1.0 1 1.0 2 1.0 4 1.0
294. LOAD COMB 3005 COMBINATION LOAD CASE
295. 36 1.0 6 1.0 1 1.0 2 1.0 4 1.0
296. LOAD COMB 3006 COMBINATION LOAD CASE
```

```
297. 37 1.0 6 1.0 1 1.0 2 1.0 4 1.0
298. LOAD COMB 3007 COMBINATION LOAD CASE
299. 38 1.0 6 1.0 1 1.0 2 1.0 4 1.0
300. LOAD COMB 3008 COMBINATION LOAD CASE
301. 39 1.0 6 1.0 1 1.0 2 1.0 4 1.0
302. LOAD COMB 4000 COMBINATION LOAD CASE -CRACK CONTROL-MAX INSIDE
303. 31 1.0 3 1.0 1 1.0 6 1.0 5 1.0
304. LOAD COMB 4001 COMBINATION LOAD CASE
305. 32 1.0 3 1.0 1 1.0 6 1.0 5 1.0
306. LOAD COMB 4002 COMBINATION LOAD CASE
307. 33 1.0 3 1.0 1 1.0 6 1.0 5 1.0
308. LOAD COMB 4003 COMBINATION LOAD CASE
309. 34 1.0 3 1.0 1 1.0 6 1.0 5 1.0
310. LOAD COMB 4004 COMBINATION LOAD CASE
311. 35 1.0 3 1.0 1 1.0 6 1.0 5 1.0
312. LOAD COMB 4005 COMBINATION LOAD CASE
313. 36 1.0 3 1.0 1 1.0 6 1.0 5 1.0
314. LOAD COMB 4006 COMBINATION LOAD CASE
315. 37 1.0 3 1.0 1 1.0 6 1.0 5 1.0
316. LOAD COMB 4007 COMBINATION LOAD CASE
317. 38 1.0 3 1.0 1 1.0 6 1.0 5 1.0
318. LOAD COMB 4008 COMBINATION LOAD CASE
319. 39 1.0 3 1.0 1 1.0 6 1.0 5 1.0
320. LOAD COMB 5000 COMBINATION LOAD CASE -CHECK SUPPORT DISPL.
321. 31 1.0 6 1.0 1 1.0
322. LOAD COMB 5001 COMBINATION LOAD CASE
323. 32 1.0 6 1.0 1 1.0
324. LOAD COMB 5002 COMBINATION LOAD CASE
325. 33 1.0 6 1.0 1 1.0
326. LOAD COMB 5003 COMBINATION LOAD CASE
327. 34 1.0 6 1.0 1 1.0
328. LOAD COMB 5004 COMBINATION LOAD CASE
329. 35 1.0 6 1.0 1 1.0
330. LOAD COMB 5005 COMBINATION LOAD CASE
331. 36 1.0 6 1.0 1 1.0
332. LOAD COMB 5006 COMBINATION LOAD CASE
333. 37 1.0 6 1.0 1 1.0
334. LOAD COMB 5007 COMBINATION LOAD CASE
335. 38 1.0 6 1.0 1 1.0
336. LOAD COMB 5008 COMBINATION LOAD CASE
337. 39 1.0 6 1.0 1 1.0
338. LOAD COMB 6000 COMBINATION LOAD CASE -CHECK DEFLEC.
339. 31 1.0 6 1.0 3 1.0
340. LOAD COMB 6001 COMBINATION LOAD CASE
341. 32 1.0 6 1.0 3 1.0
342. LOAD COMB 6002 COMBINATION LOAD CASE
343. 33 1.0 6 1.0 3 1.0
344. LOAD COMB 6003 COMBINATION LOAD CASE
345. 34 1.0 6 1.0 3 1.0
346. LOAD COMB 6004 COMBINATION LOAD CASE
347. 35 1.0 6 1.0 3 1.0
348. LOAD COMB 6005 COMBINATION LOAD CASE
349. 36 1.0 6 1.0 3 1.0
350. LOAD COMB 6006 COMBINATION LOAD CASE
351. 37 1.0 6 1.0 3 1.0
352. LOAD COMB 6007 COMBINATION LOAD CASE
```

```
353. 38 1.0 6 1.0 3 1.0
354. LOAD COMB 6008 COMBINATION LOAD CASE
355. 39 1.0 6 1.0 3 1.0
356. ***
357. LOAD COMB 7000 COMBINATION LOAD CASE -LL2
358. 31 1.0 6 1.0
359. LOAD COMB 7001 COMBINATION LOAD CASE
360. 32 1.0 6 1.0
361. LOAD COMB 7002 COMBINATION LOAD CASE
362. 33 1.0 6 1.0
363. LOAD COMB 7003 COMBINATION LOAD CASE
364. 34 1.0 6 1.0
365. LOAD COMB 7004 COMBINATION LOAD CASE
366. 35 1.0 6 1.0
367. LOAD COMB 7005 COMBINATION LOAD CASE
368. 36 1.0 6 1.0
369. LOAD COMB 7006 COMBINATION LOAD CASE
370. 37 1.0 6 1.0
371. LOAD COMB 7007 COMBINATION LOAD CASE
372. 38 1.0 6 1.0
373. LOAD COMB 7008 COMBINATION LOAD CASE
374. 39 1.0 6 1.0
375. ***
376. PERFORM ANALYSIS


        P R O B L E M   S T A T I S T I C S
        -----------------------------------

  NUMBER OF JOINTS          5  NUMBER OF MEMBERS       4
  NUMBER OF PLATES          0  NUMBER OF SOLIDS        0
  NUMBER OF SURFACES        0  NUMBER OF SUPPORTS      2


       SOLVER USED IS THE OUT-OF-CORE BASIC SOLVER

  ORIGINAL/FINAL BAND-WIDTH=     3/     3/     19 DOF
TOTAL      PRIMARY LOAD CASES =    29, TOTAL DEGREES OF FREEDOM =      20
TOTAL LOAD COMBINATION  CASES =   147  SO FAR.
  SIZE OF STIFFNESS MATRIX =        1 DOUBLE  KILO-WORDS
  REQRD/AVAIL. DISK SPACE  =     12.0/      0.0 MB



377. LOAD LIST 1 TO 6 11 TO 22 31 TO 39
378. PRINT SUPPORT REACTION ALL
```

SUPPORT REACTIONS -UNIT KIP FEET STRUCTURE TYPE = SPACE

JOINT	LOAD	FORCE-X	FORCE-Y	FORCE-Z	MOM-X	MOM-Y	MOM Z
1	1	0.91	5.22	0.00	0.00	0.00	0.00
	2	-2.92	0.00	0.00	0.00	0.00	0.00
	3	-1.46	0.00	0.00	0.00	0.00	0.00
	4	-0.96	0.00	0.00	0.00	0.00	0.00
	5	1.94	0.00	0.00	0.00	0.00	0.00
	6	0.19	0.83	0.00	0.00	0.00	0.00
	11	0.05	4.45	0.00	0.00	0.00	0.00
	12	0.25	4.11	0.00	0.00	0.00	0.00
	13	0.42	3.78	0.00	0.00	0.00	0.00
	14	0.55	3.44	0.00	0.00	0.00	0.00
	15	0.65	3.10	0.00	0.00	0.00	0.00
	16	0.72	2.77	0.00	0.00	0.00	0.00
	17	0.75	2.43	0.00	0.00	0.00	0.00
	18	0.80	6.68	0.00	0.00	0.00	0.00
	19	0.99	6.01	0.00	0.00	0.00	0.00
	20	1.10	5.34	0.00	0.00	0.00	0.00
	21	1.15	4.66	0.00	0.00	0.00	0.00
	22	1.13	3.99	0.00	0.00	0.00	0.00
	31	0.04	3.48	0.00	0.00	0.00	0.00
	32	0.19	3.21	0.00	0.00	0.00	0.00
	33	0.36	6.43	0.00	0.00	0.00	0.00
	34	0.62	5.90	0.00	0.00	0.00	0.00
	35	0.84	5.38	0.00	0.00	0.00	0.00
	36	0.99	4.85	0.00	0.00	0.00	0.00
	37	1.10	4.32	0.00	0.00	0.00	0.00
	38	1.15	3.90	0.00	0.00	0.00	0.00
	39	1.17	3.38	0.00	0.00	0.00	0.00
2	1	-0.91	5.22	0.00	0.00	0.00	0.00
	2	2.92	0.00	0.00	0.00	0.00	0.00
	3	1.46	0.00	0.00	0.00	0.00	0.00
	4	0.96	0.00	0.00	0.00	0.00	0.00
	5	-1.94	0.00	0.00	0.00	0.00	0.00
	6	-0.19	0.83	0.00	0.00	0.00	0.00
	11	-0.05	0.07	0.00	0.00	0.00	0.00
	12	-0.25	0.41	0.00	0.00	0.00	0.00
	13	-0.42	0.74	0.00	0.00	0.00	0.00
	14	-0.55	1.08	0.00	0.00	0.00	0.00
	15	-0.65	1.42	0.00	0.00	0.00	0.00
	16	-0.72	1.76	0.00	0.00	0.00	0.00
	17	-0.75	2.09	0.00	0.00	0.00	0.00
	18	-0.80	2.36	0.00	0.00	0.00	0.00
	19	-0.99	3.03	0.00	0.00	0.00	0.00
	20	-1.10	3.71	0.00	0.00	0.00	0.00
	21	-1.15	4.38	0.00	0.00	0.00	0.00
	22	-1.13	5.06	0.00	0.00	0.00	0.00
	31	-0.04	0.05	0.00	0.00	0.00	0.00

SUPPORT REACTIONS -UNIT KIP FEET STRUCTURE TYPE = SPACE

JOINT	LOAD	FORCE-X	FORCE-Y	FORCE-Z	MOM-X	MOM-Y	MOM Z
	32	-0.19	0.32	0.00	0.00	0.00	0.00
	33	-0.36	0.64	0.00	0.00	0.00	0.00
	34	-0.62	1.16	0.00	0.00	0.00	0.00
	35	-0.84	1.69	0.00	0.00	0.00	0.00
	36	-0.99	2.22	0.00	0.00	0.00	0.00
	37	-1.10	2.74	0.00	0.00	0.00	0.00
	38	-1.15	3.16	0.00	0.00	0.00	0.00
	39	-1.17	3.69	0.00	0.00	0.00	0.00

********** END OF LATEST ANALYSIS RESULT **********

379. PRINT FORCE ENVELOPE NSECTION 2 ALL

MEMBER FORCE ENVELOPE

ALL UNITS ARE KIP FEET

MEMB	DISTANCE		FY	LD	MZ	LD	FZ	LD	MY	LD
1	0.00	MAX	2.92	2	0.00	39	0.00	39	0.00	39
		MIN	-1.94	5	0.00	39	0.00	39	0.00	39
	0.83	MAX	2.23	2	1.41	5	0.00	39	0.00	39
		MIN	-1.44	5	-2.14	2	0.00	39	0.00	39
	1.67	MAX	1.58	2	2.41	5	0.00	39	0.00	39
		MIN	-1.17	39	-3.72	2	0.00	39	0.00	39
	2.50	MAX	0.98	2	3.06	5	0.00	39	0.00	39
		MIN	-1.17	39	-4.79	2	0.00	39	0.00	39
	3.33	MAX	0.43	2	3.89	39	0.00	39	0.00	39
		MIN	-1.17	39	-5.37	2	0.00	39	0.00	39
	4.17	MAX	0.12	5	4.86	39	0.00	39	0.00	39
		MIN	-1.17	39	-5.52	2	0.00	39	0.00	39
	5.00	MAX	0.40	5	5.83	39	0.00	39	0.00	39
		MIN	-1.17	39	-5.27	2	0.00	39	0.00	39
	5.83	MAX	0.64	5	6.80	39	0.00	39	0.00	39
		MIN	-1.17	39	-4.67	2	0.00	39	0.00	39
	6.67	MAX	0.83	5	7.77	39	0.00	39	0.00	39
		MIN	-1.28	2	-3.75	2	0.00	39	0.00	39
	7.50	MAX	0.99	5	8.74	39	0.00	39	0.00	39
		MIN	-1.58	2	-2.55	2	0.00	39	0.00	39
	8.33	MAX	1.09	5	9.71	39	0.00	39	0.00	39
		MIN	-1.84	2	-1.12	2	0.00	39	0.00	39
	9.17	MAX	1.16	5	10.69	39	0.00	39	0.00	39
		MIN	-2.05	2	-0.42	5	0.00	39	0.00	39
	10.00	MAX	1.18	5	11.66	39	0.00	39	0.00	39
		MIN	-2.21	2	-1.40	5	0.00	39	0.00	39

MAX/MIN FORCE VALUES FOR MEMB 1, AMONGST ALL SECT LOCATIONS

	FY/ FZ	DIST DIST	LD LD	MZ/ MY	DIST DIST	LD LD	FX	DIST	LD
MAX.	2.92	0.00	2	11.66	10.00	39			
	0.00	0.00	1	0.00	0.00	1	6.68 C	0.00	18
MIN.	-2.21	10.00	2	-5.52	4.17	2			
	0.00	10.00	39	0.00	10.00	39	0.00	10.00	5

2	0.00	MAX	1.94	5	0.00	39	0.00	39	0.00	39
		MIN	-2.92	2	0.00	39	0.00	39	0.00	39
	0.83	MAX	1.44	5	2.14	2	0.00	39	0.00	39
		MIN	-2.23	2	-1.41	5	0.00	39	0.00	39

1.67	MAX	1.17	39	3.72	2	0.00	39	0.00	39
	MIN	-1.58	2	-2.41	5	0.00	39	0.00	39
2.50	MAX	1.17	39	4.79	2	0.00	39	0.00	39
	MIN	-0.98	2	-3.06	5	0.00	39	0.00	39
3.33	MAX	1.17	39	5.37	2	0.00	39	0.00	39
	MIN	-0.43	2	-3.89	39	0.00	39	0.00	39
4.17	MAX	1.17	39	5.52	2	0.00	39	0.00	39
	MIN	-0.12	5	-4.86	39	0.00	39	0.00	39
5.00	MAX	1.17	39	5.27	2	0.00	39	0.00	39
	MIN	-0.40	5	-5.83	39	0.00	39	0.00	39
5.83	MAX	1.17	39	4.67	2	0.00	39	0.00	39
	MIN	-0.64	5	-6.80	39	0.00	39	0.00	39
6.67	MAX	1.28	2	3.75	2	0.00	39	0.00	39
	MIN	-0.83	5	-7.77	39	0.00	39	0.00	39
7.50	MAX	1.58	2	2.55	2	0.00	39	0.00	39
	MIN	-0.99	5	-8.74	39	0.00	39	0.00	39
8.33	MAX	1.84	2	1.12	2	0.00	39	0.00	39
	MIN	-1.09	5	-9.71	39	0.00	39	0.00	39
9.17	MAX	2.05	2	0.42	5	0.00	39	0.00	39
	MIN	-1.16	5	-10.69	39	0.00	39	0.00	39
10.00	MAX	2.21	2	1.40	5	0.00	39	0.00	39
	MIN	-1.18	5	-11.66	39	0.00	39	0.00	39

MAX/MIN FORCE VALUES FOR MEMB 2, AMONGST ALL SECT LOCATIONS

	FY/ FZ	DIST DIST	LD LD	MZ/ MY	DIST DIST	LD LD	FX	DIST	LD
MAX.	2.21	10.00	2	5.52	4.17	2			
	0.00	0.00	1	0.00	0.00	1	5.22 C	0.00	1
MIN.	-2.92	0.00	2	-11.66	10.00	39			
	0.00	10.00	39	0.00	10.00	39	0.00	10.00	5

3	0.00	MAX	6.68	18	11.03	39	0.00	39	0.00	39
		MIN	0.00	5	-2.19	5	0.00	39	0.00	39
	1.08	MAX	6.01	19	7.37	39	0.00	39	0.00	39
		MIN	-0.07	11	-3.52	12	0.00	39	0.00	39
	2.17	MAX	5.38	35	3.75	2	0.00	39	0.00	39
		MIN	-0.41	12	-7.99	34	0.00	39	0.00	39
	3.25	MAX	5.38	35	3.75	2	0.00	39	0.00	39
		MIN	-0.41	12	-10.79	35	0.00	39	0.00	39
	4.33	MAX	4.85	36	3.75	2	0.00	39	0.00	39
		MIN	-0.74	13	-15.43	35	0.00	39	0.00	39
	5.42	MAX	4.85	36	3.75	2	0.00	39	0.00	39
		MIN	-0.74	13	-17.68	36	0.00	39	0.00	39
	6.50	MAX	4.32	37	3.75	2	0.00	39	0.00	39
		MIN	-1.16	34	-21.16	36	0.00	39	0.00	39
	7.58	MAX	4.32	37	3.75	2	0.00	39	0.00	39
		MIN	-1.16	34	-22.85	37	0.00	39	0.00	39
	8.67	MAX	3.90	38	3.75	2	0.00	39	0.00	39
		MIN	-1.69	35	-25.17	37	0.00	39	0.00	39
	9.75	MAX	3.90	38	3.75	2	0.00	39	0.00	39
		MIN	-1.69	35	-27.37	38	0.00	39	0.00	39

10.83	MAX	3.38	39	3.75	2	0.00	39	0.00	39
	MIN	-2.22	36	-28.66	38	0.00	39	0.00	39
11.92	MAX	3.38	39	3.75	2	0.00	39	0.00	39
	MIN	-2.22	36	-29.22	39	0.00	39	0.00	39
13.00	MAX	2.16	18	3.75	2	0.00	39	0.00	39
	MIN	-2.74	37	-29.47	38	0.00	39	0.00	39

MAX/MIN FORCE VALUES FOR MEMB 3, AMONGST ALL SECT LOCATIONS

	FY/ FZ	DIST DIST	LD LD	MZ/ MY	DIST DIST	LD LD	FX	DIST	LD
MAX.	6.68	0.00	18	11.03	0.00	39			
	0.00	0.00	1	0.00	0.00	1	2.21 C	0.00	2
MIN.	-2.74	13.00	37	-29.47	13.00	38			
	0.00	13.00	39	0.00	13.00	39	1.18 T	13.00	5

4	0.00	MAX	5.06	22	11.01	38	0.00	39	0.00	39
		MIN	0.00	5	-2.19	5	0.00	39	0.00	39
	1.08	MAX	5.06	22	7.61	37	0.00	39	0.00	39
		MIN	0.00	5	-2.19	5	0.00	39	0.00	39
	2.17	MAX	5.06	22	4.88	36	0.00	39	0.00	39
		MIN	0.00	5	-2.19	5	0.00	39	0.00	39
	3.25	MAX	5.06	22	3.75	2	0.00	39	0.00	39
		MIN	0.00	5	-6.48	22	0.00	39	0.00	39
	4.33	MAX	5.06	22	3.75	2	0.00	39	0.00	39
		MIN	0.00	5	-11.96	22	0.00	39	0.00	39
	5.42	MAX	4.38	21	3.75	2	0.00	39	0.00	39
		MIN	0.00	5	-14.78	22	0.00	39	0.00	39
	6.50	MAX	4.38	21	3.75	2	0.00	39	0.00	39
		MIN	0.00	5	-18.04	21	0.00	39	0.00	39
	7.58	MAX	3.71	20	3.75	2	0.00	39	0.00	39
		MIN	-0.14	21	-19.38	21	0.00	39	0.00	39
	8.67	MAX	3.71	20	3.75	2	0.00	39	0.00	39
		MIN	-0.14	21	-21.92	20	0.00	39	0.00	39
	9.75	MAX	3.69	39	3.75	2	0.00	39	0.00	39
		MIN	-0.81	20	-25.03	39	0.00	39	0.00	39
	10.83	MAX	3.16	38	3.75	2	0.00	39	0.00	39
		MIN	-1.49	19	-29.02	39	0.00	39	0.00	39
	11.92	MAX	3.16	38	3.75	2	0.00	39	0.00	39
		MIN	-1.49	19	-29.18	39	0.00	39	0.00	39
	13.00	MAX	2.74	37	3.75	2	0.00	39	0.00	39
		MIN	-2.16	18	-29.47	38	0.00	39	0.00	39

MAX/MIN FORCE VALUES FOR MEMB 4, AMONGST ALL SECT LOCATIONS

	FY/ FZ	DIST DIST	LD LD	MZ/ MY	DIST DIST	LD LD	FX	DIST	LD

MAX.	5.06	0.00	22	11.01	0.00	38			
	0.00	0.00	1	0.00	0.00	1	2.21 C	0.00	2
MIN.	-2.16	13.00	18	-29.47	13.00	38			
	0.00	13.00	39	0.00	13.00	39	1.18 T	13.00	5

********** END OF FORCE ENVELOPE FROM INTERNAL STORAGE **********

380. LOAD LIST 300 TO 311 400 TO 411 3000 TO 3008 4000 TO 4008
381. PRINT SUPPORT REACTION ALL

SUPPORT REACTIONS -UNIT KIP FEET STRUCTURE TYPE = SPACE

JOINT	LOAD	FORCE-X	FORCE-Y	FORCE-Z	MOM-X	MOM-Y	MOM Z
1	300	-2.73	10.50	0.00	0.00	0.00	0.00
	301	-2.52	10.16	0.00	0.00	0.00	0.00
	302	-2.36	9.83	0.00	0.00	0.00	0.00
	303	-2.22	9.49	0.00	0.00	0.00	0.00
	304	-2.12	9.15	0.00	0.00	0.00	0.00
	305	-2.05	8.82	0.00	0.00	0.00	0.00
	306	-2.02	8.48	0.00	0.00	0.00	0.00
	307	-1.97	12.73	0.00	0.00	0.00	0.00
	308	-1.79	12.06	0.00	0.00	0.00	0.00
	309	-1.67	11.38	0.00	0.00	0.00	0.00
	310	-1.62	10.71	0.00	0.00	0.00	0.00
	311	-1.64	10.04	0.00	0.00	0.00	0.00
	400	1.63	10.50	0.00	0.00	0.00	0.00
	401	1.83	10.16	0.00	0.00	0.00	0.00
	402	2.00	9.83	0.00	0.00	0.00	0.00
	403	2.14	9.49	0.00	0.00	0.00	0.00
	404	2.24	9.15	0.00	0.00	0.00	0.00
	405	2.30	8.82	0.00	0.00	0.00	0.00
	406	2.34	8.48	0.00	0.00	0.00	0.00
	407	2.39	12.73	0.00	0.00	0.00	0.00
	408	2.57	12.06	0.00	0.00	0.00	0.00
	409	2.69	11.38	0.00	0.00	0.00	0.00
	410	2.73	10.71	0.00	0.00	0.00	0.00
	411	2.71	10.04	0.00	0.00	0.00	0.00
	3000	-2.74	9.53	0.00	0.00	0.00	0.00
	3001	-2.58	9.26	0.00	0.00	0.00	0.00
	3002	-2.41	12.48	0.00	0.00	0.00	0.00
	3003	-2.15	11.95	0.00	0.00	0.00	0.00
	3004	-1.94	11.42	0.00	0.00	0.00	0.00
	3005	-1.78	10.90	0.00	0.00	0.00	0.00
	3006	-1.67	10.37	0.00	0.00	0.00	0.00
	3007	-1.62	9.95	0.00	0.00	0.00	0.00
	3008	-1.61	9.43	0.00	0.00	0.00	0.00
	4000	1.62	9.53	0.00	0.00	0.00	0.00
	4001	1.78	9.26	0.00	0.00	0.00	0.00
	4002	1.94	12.48	0.00	0.00	0.00	0.00
	4003	2.21	11.95	0.00	0.00	0.00	0.00
	4004	2.42	11.42	0.00	0.00	0.00	0.00
	4005	2.58	10.90	0.00	0.00	0.00	0.00
	4006	2.68	10.37	0.00	0.00	0.00	0.00
	4007	2.74	9.95	0.00	0.00	0.00	0.00
	4008	2.75	9.43	0.00	0.00	0.00	0.00
2	300	2.73	6.12	0.00	0.00	0.00	0.00
	301	2.52	6.46	0.00	0.00	0.00	0.00
	302	2.36	6.79	0.00	0.00	0.00	0.00
	303	2.22	7.13	0.00	0.00	0.00	0.00

SUPPORT REACTIONS -UNIT KIP FEET STRUCTURE TYPE = SPACE

JOINT	LOAD	FORCE-X	FORCE-Y	FORCE-Z	MOM-X	MOM-Y	MOM Z
	304	2.12	7.47	0.00	0.00	0.00	0.00
	305	2.05	7.80	0.00	0.00	0.00	0.00
	306	2.02	8.14	0.00	0.00	0.00	0.00
	307	1.97	8.41	0.00	0.00	0.00	0.00
	308	1.79	9.08	0.00	0.00	0.00	0.00
	309	1.67	9.76	0.00	0.00	0.00	0.00
	310	1.62	10.43	0.00	0.00	0.00	0.00
	311	1.64	11.10	0.00	0.00	0.00	0.00
	400	-1.63	6.12	0.00	0.00	0.00	0.00
	401	-1.83	6.46	0.00	0.00	0.00	0.00
	402	-2.00	6.79	0.00	0.00	0.00	0.00
	403	-2.14	7.13	0.00	0.00	0.00	0.00
	404	-2.24	7.47	0.00	0.00	0.00	0.00
	405	-2.30	7.80	0.00	0.00	0.00	0.00
	406	-2.34	8.14	0.00	0.00	0.00	0.00
	407	-2.39	8.41	0.00	0.00	0.00	0.00
	408	-2.57	9.08	0.00	0.00	0.00	0.00
	409	-2.69	9.76	0.00	0.00	0.00	0.00
	410	-2.73	10.43	0.00	0.00	0.00	0.00
	411	-2.71	11.10	0.00	0.00	0.00	0.00
	3000	2.74	6.10	0.00	0.00	0.00	0.00
	3001	2.58	6.37	0.00	0.00	0.00	0.00
	3002	2.41	6.68	0.00	0.00	0.00	0.00
	3003	2.15	7.21	0.00	0.00	0.00	0.00
	3004	1.94	7.74	0.00	0.00	0.00	0.00
	3005	1.78	8.26	0.00	0.00	0.00	0.00
	3006	1.67	8.79	0.00	0.00	0.00	0.00
	3007	1.62	9.21	0.00	0.00	0.00	0.00
	3008	1.61	9.73	0.00	0.00	0.00	0.00
	4000	-1.62	6.10	0.00	0.00	0.00	0.00
	4001	-1.78	6.37	0.00	0.00	0.00	0.00
	4002	-1.94	6.68	0.00	0.00	0.00	0.00
	4003	-2.21	7.21	0.00	0.00	0.00	0.00
	4004	-2.42	7.74	0.00	0.00	0.00	0.00
	4005	-2.58	8.26	0.00	0.00	0.00	0.00
	4006	-2.68	8.79	0.00	0.00	0.00	0.00
	4007	-2.74	9.21	0.00	0.00	0.00	0.00
	4008	-2.75	9.73	0.00	0.00	0.00	0.00

********** END OF LATEST ANALYSIS RESULT **********

```
382. ***LL
383. LOAD LIST 700 TO 711 7000 TO 7008
384. PRINT SUPPORT REACTION ALL
```

SUPPORT REACTIONS -UNIT KIP FEET STRUCTURE TYPE = SPACE

JOINT	LOAD	FORCE-X	FORCE-Y	FORCE-Z	MOM-X	MOM-Y	MOM Z
1	700	0.24	5.28	0.00	0.00	0.00	0.00
	701	0.44	4.95	0.00	0.00	0.00	0.00
	702	0.61	4.61	0.00	0.00	0.00	0.00
	703	0.74	4.27	0.00	0.00	0.00	0.00
	704	0.84	3.94	0.00	0.00	0.00	0.00
	705	0.91	3.60	0.00	0.00	0.00	0.00
	706	0.95	3.26	0.00	0.00	0.00	0.00
	707	1.00	7.52	0.00	0.00	0.00	0.00
	708	1.18	6.84	0.00	0.00	0.00	0.00
	709	1.29	6.17	0.00	0.00	0.00	0.00
	710	1.34	5.49	0.00	0.00	0.00	0.00
	711	1.32	4.82	0.00	0.00	0.00	0.00
	7000	0.23	4.31	0.00	0.00	0.00	0.00
	7001	0.39	4.05	0.00	0.00	0.00	0.00
	7002	0.55	7.26	0.00	0.00	0.00	0.00
	7003	0.82	6.73	0.00	0.00	0.00	0.00
	7004	1.03	6.21	0.00	0.00	0.00	0.00
	7005	1.19	5.68	0.00	0.00	0.00	0.00
	7006	1.29	5.15	0.00	0.00	0.00	0.00
	7007	1.35	4.74	0.00	0.00	0.00	0.00
	7008	1.36	4.21	0.00	0.00	0.00	0.00
2	700	-0.24	0.90	0.00	0.00	0.00	0.00
	701	-0.44	1.24	0.00	0.00	0.00	0.00
	702	-0.61	1.58	0.00	0.00	0.00	0.00
	703	-0.74	1.91	0.00	0.00	0.00	0.00
	704	-0.84	2.25	0.00	0.00	0.00	0.00
	705	-0.91	2.59	0.00	0.00	0.00	0.00
	706	-0.95	2.92	0.00	0.00	0.00	0.00
	707	-1.00	3.19	0.00	0.00	0.00	0.00
	708	-1.18	3.87	0.00	0.00	0.00	0.00
	709	-1.29	4.54	0.00	0.00	0.00	0.00
	710	-1.34	5.21	0.00	0.00	0.00	0.00
	711	-1.32	5.89	0.00	0.00	0.00	0.00
	7000	-0.23	0.89	0.00	0.00	0.00	0.00
	7001	-0.39	1.15	0.00	0.00	0.00	0.00
	7002	-0.55	1.47	0.00	0.00	0.00	0.00
	7003	-0.82	1.99	0.00	0.00	0.00	0.00
	7004	-1.03	2.52	0.00	0.00	0.00	0.00
	7005	-1.19	3.05	0.00	0.00	0.00	0.00
	7006	-1.29	3.57	0.00	0.00	0.00	0.00
	7007	-1.35	3.99	0.00	0.00	0.00	0.00
	7008	-1.36	4.52	0.00	0.00	0.00	0.00

********** END OF LATEST ANALYSIS RESULT **********

```
385. ***DL
386. LOAD LIST 800
387. PRINT SUPPORT REACTION ALL
```

SUPPORT REACTIONS -UNIT KIP FEET STRUCTURE TYPE = SPACE

JOINT	LOAD	FORCE-X	FORCE-Y	FORCE-Z	MOM-X	MOM-Y	MOM Z
1	800	-2.96	5.22	0.00	0.00	0.00	0.00
2	800	2.96	5.22	0.00	0.00	0.00	0.00

********** END OF LATEST ANALYSIS RESULT **********

```
388. *** BEAM DISPLACEMENTS AT CL FROM 1.0LL
389. LOAD LIST 600 TO 611 6000 TO 6008
390. PRINT JOINT DISPLACEMENTS LIST 4
```

JOINT DISPLACEMENT (INCH RADIANS) STRUCTURE TYPE = SPACE

JOINT	LOAD	X-TRANS	Y-TRANS	Z-TRANS	X-ROTAN	Y-ROTAN	Z-ROTAN
4	600	0.00391	-0.01360	0.00000	0.00000	0.00000	0.00002
	601	0.02007	-0.03555	0.00000	0.00000	0.00000	0.00011
	602	0.02780	-0.05874	0.00000	0.00000	0.00000	0.00018
	603	0.02866	-0.08121	0.00000	0.00000	0.00000	0.00022
	604	0.02419	-0.10098	0.00000	0.00000	0.00000	0.00023
	605	0.01597	-0.11609	0.00000	0.00000	0.00000	0.00019
	606	0.00555	-0.12459	0.00000	0.00000	0.00000	0.00008
	607	0.00296	-0.13058	0.00000	0.00000	0.00000	0.00001
	608	0.00824	-0.14736	0.00000	0.00000	0.00000	-0.00004
	609	0.00665	-0.15794	0.00000	0.00000	0.00000	-0.00004
	610	0.00130	-0.16233	0.00000	0.00000	0.00000	-0.00001
	611	-0.00471	-0.16052	0.00000	0.00000	0.00000	0.00003
	6000	0.00305	-0.01253	0.00000	0.00000	0.00000	0.00002
	6001	0.01567	-0.02967	0.00000	0.00000	0.00000	0.00008
	6002	0.02477	-0.05160	0.00000	0.00000	0.00000	0.00015
	6003	0.03806	-0.08629	0.00000	0.00000	0.00000	0.00026
	6004	0.04061	-0.11985	0.00000	0.00000	0.00000	0.00032
	6005	0.03486	-0.14920	0.00000	0.00000	0.00000	0.00032
	6006	0.02323	-0.17128	0.00000	0.00000	0.00000	0.00024
	6007	0.01173	-0.18396	0.00000	0.00000	0.00000	0.00013
	6008	-0.00490	-0.18656	0.00000	0.00000	0.00000	-0.00005

********** END OF LATEST ANALYSIS RESULT **********

```
391. *** SUPPORT DISPLACEMENTS FROM 1.0DL+1.0LL
392. LOAD LIST 500 TO 511 5000 TO 5008
393. PRINT JOINT DISPLACEMENTS LIST 2
```

JOINT DISPLACEMENT (INCH RADIANS) STRUCTURE TYPE = SPACE

JOINT	LOAD	X-TRANS	Y-TRANS	Z-TRANS	X-ROTAN	Y-ROTAN	Z-ROTAN
2	500	0.00000	0.00000	0.00000	0.00000	0.00000	-0.00080
	501	0.00000	0.00000	0.00000	0.00000	0.00000	-0.00107
	502	0.00000	0.00000	0.00000	0.00000	0.00000	-0.00124
	503	0.00000	0.00000	0.00000	0.00000	0.00000	-0.00134
	504	0.00000	0.00000	0.00000	0.00000	0.00000	-0.00137
	505	0.00000	0.00000	0.00000	0.00000	0.00000	-0.00135
	506	0.00000	0.00000	0.00000	0.00000	0.00000	-0.00129
	507	0.00000	0.00000	0.00000	0.00000	0.00000	-0.00130
	508	0.00000	0.00000	0.00000	0.00000	0.00000	-0.00147
	509	0.00000	0.00000	0.00000	0.00000	0.00000	-0.00153
	510	0.00000	0.00000	0.00000	0.00000	0.00000	-0.00152
	511	0.00000	0.00000	0.00000	0.00000	0.00000	-0.00146
	5000	0.00000	0.00000	0.00000	0.00000	0.00000	-0.00079
	5001	0.00000	0.00000	0.00000	0.00000	0.00000	-0.00099
	5002	0.00000	0.00000	0.00000	0.00000	0.00000	-0.00118
	5003	0.00000	0.00000	0.00000	0.00000	0.00000	-0.00146
	5004	0.00000	0.00000	0.00000	0.00000	0.00000	-0.00162
	5005	0.00000	0.00000	0.00000	0.00000	0.00000	-0.00168
	5006	0.00000	0.00000	0.00000	0.00000	0.00000	-0.00166
	5007	0.00000	0.00000	0.00000	0.00000	0.00000	-0.00161
	5008	0.00000	0.00000	0.00000	0.00000	0.00000	-0.00149

********** END OF LATEST ANALYSIS RESULT **********

```
394. LOAD LIST 300 TO 311 400 TO 411 3000 TO 3008 4000 TO 4008
395. PRINT MEMBER FORCES ALL
```

MEMBER END FORCES STRUCTURE TYPE = SPACE

ALL UNITS ARE -- KIP FEET (LOCAL)

MEMBER	LOAD	JT	AXIAL	SHEAR-Y	SHEAR-Z	TORSION	MOM-Y	MOM-Z
1	300	1	10.50	2.73	0.00	0.00	0.00	0.00
		3	-9.26	4.50	0.00	0.00	0.00	-14.71
	301	1	10.16	2.52	0.00	0.00	0.00	0.00
		3	-8.92	4.71	0.00	0.00	0.00	-16.74
	302	1	9.83	2.36	0.00	0.00	0.00	0.00
		3	-8.58	4.87	0.00	0.00	0.00	-18.42
	303	1	9.49	2.22	0.00	0.00	0.00	0.00
		3	-8.24	5.01	0.00	0.00	0.00	-19.77
	304	1	9.15	2.12	0.00	0.00	0.00	0.00
		3	-7.91	5.11	0.00	0.00	0.00	-20.78
	305	1	8.82	2.05	0.00	0.00	0.00	0.00
		3	-7.57	5.18	0.00	0.00	0.00	-21.46
	306	1	8.48	2.02	0.00	0.00	0.00	0.00
		3	-7.23	5.21	0.00	0.00	0.00	-21.80
	307	1	12.73	1.97	0.00	0.00	0.00	0.00
		3	-11.49	5.26	0.00	0.00	0.00	-22.29
	308	1	12.06	1.79	0.00	0.00	0.00	0.00
		3	-10.81	5.44	0.00	0.00	0.00	-24.12
	309	1	11.38	1.67	0.00	0.00	0.00	0.00
		3	-10.14	5.56	0.00	0.00	0.00	-25.27
	310	1	10.71	1.62	0.00	0.00	0.00	0.00
		3	-9.47	5.61	0.00	0.00	0.00	-25.75
	311	1	10.04	1.64	0.00	0.00	0.00	0.00
		3	-8.79	5.59	0.00	0.00	0.00	-25.55
	400	1	10.50	-1.63	0.00	0.00	0.00	0.00
		3	-9.26	1.08	0.00	0.00	0.00	-11.26
	401	1	10.16	-1.83	0.00	0.00	0.00	0.00
		3	-8.92	1.28	0.00	0.00	0.00	-13.28
	402	1	9.83	-2.00	0.00	0.00	0.00	0.00
		3	-8.58	1.45	0.00	0.00	0.00	-14.97
	403	1	9.49	-2.14	0.00	0.00	0.00	0.00
		3	-8.24	1.59	0.00	0.00	0.00	-16.32
	404	1	9.15	-2.24	0.00	0.00	0.00	0.00
		3	-7.91	1.69	0.00	0.00	0.00	-17.33
	405	1	8.82	-2.30	0.00	0.00	0.00	0.00
		3	-7.57	1.75	0.00	0.00	0.00	-18.01
	406	1	8.48	-2.34	0.00	0.00	0.00	0.00
		3	-7.23	1.79	0.00	0.00	0.00	-18.34
	407	1	12.73	-2.39	0.00	0.00	0.00	0.00
		3	-11.49	1.84	0.00	0.00	0.00	-18.84
	408	1	12.06	-2.57	0.00	0.00	0.00	0.00
		3	-10.81	2.02	0.00	0.00	0.00	-20.67

MEMBER END FORCES STRUCTURE TYPE = SPACE

ALL UNITS ARE -- KIP FEET (LOCAL)

MEMBER	LOAD	JT	AXIAL	SHEAR-Y	SHEAR-Z	TORSION	MOM-Y	MOM-Z
	409	1	11.38	-2.69	0.00	0.00	0.00	0.00
		3	-10.14	2.14	0.00	0.00	0.00	-21.82
	410	1	10.71	-2.73	0.00	0.00	0.00	0.00
		3	-9.47	2.18	0.00	0.00	0.00	-22.30
	411	1	10.04	-2.71	0.00	0.00	0.00	0.00
		3	-8.79	2.16	0.00	0.00	0.00	-22.10
	3000	1	9.53	2.74	0.00	0.00	0.00	0.00
		3	-8.28	4.49	0.00	0.00	0.00	-14.61
	3001	1	9.26	2.58	0.00	0.00	0.00	0.00
		3	-8.02	4.65	0.00	0.00	0.00	-16.19
	3002	1	12.48	2.41	0.00	0.00	0.00	0.00
		3	-11.23	4.82	0.00	0.00	0.00	-17.87
	3003	1	11.95	2.15	0.00	0.00	0.00	0.00
		3	-10.71	5.08	0.00	0.00	0.00	-20.50
	3004	1	11.42	1.94	0.00	0.00	0.00	0.00
		3	-10.18	5.29	0.00	0.00	0.00	-22.61
	3005	1	10.90	1.78	0.00	0.00	0.00	0.00
		3	-9.65	5.45	0.00	0.00	0.00	-24.19
	3006	1	10.37	1.67	0.00	0.00	0.00	0.00
		3	-9.13	5.56	0.00	0.00	0.00	-25.25
	3007	1	9.95	1.62	0.00	0.00	0.00	0.00
		3	-8.71	5.61	0.00	0.00	0.00	-25.80
	3008	1	9.43	1.61	0.00	0.00	0.00	0.00
		3	-8.18	5.62	0.00	0.00	0.00	-25.91
	4000	1	9.53	-1.62	0.00	0.00	0.00	0.00
		3	-8.28	1.07	0.00	0.00	0.00	-11.16
	4001	1	9.26	-1.78	0.00	0.00	0.00	0.00
		3	-8.02	1.23	0.00	0.00	0.00	-12.74
	4002	1	12.48	-1.94	0.00	0.00	0.00	0.00
		3	-11.23	1.39	0.00	0.00	0.00	-14.41
	4003	1	11.95	-2.21	0.00	0.00	0.00	0.00
		3	-10.71	1.66	0.00	0.00	0.00	-17.05
	4004	1	11.42	-2.42	0.00	0.00	0.00	0.00
		3	-10.18	1.87	0.00	0.00	0.00	-19.16
	4005	1	10.90	-2.58	0.00	0.00	0.00	0.00
		3	-9.65	2.03	0.00	0.00	0.00	-20.74
	4006	1	10.37	-2.68	0.00	0.00	0.00	0.00
		3	-9.13	2.13	0.00	0.00	0.00	-21.79
	4007	1	9.95	-2.74	0.00	0.00	0.00	0.00
		3	-8.71	2.19	0.00	0.00	0.00	-22.35
	4008	1	9.43	-2.75	0.00	0.00	0.00	0.00
		3	-8.18	2.20	0.00	0.00	0.00	-22.46
2	300	2	6.12	-2.73	0.00	0.00	0.00	0.00
		5	-4.87	-4.50	0.00	0.00	0.00	14.71

MEMBER END FORCES STRUCTURE TYPE = SPACE

ALL UNITS ARE -- KIP FEET (LOCAL)

MEMBER	LOAD	JT	AXIAL	SHEAR-Y	SHEAR-Z	TORSION	MOM-Y	MOM-Z
	301	2	6.46	-2.52	0.00	0.00	0.00	0.00
		5	-5.21	-4.71	0.00	0.00	0.00	16.74
	302	2	6.79	-2.36	0.00	0.00	0.00	0.00
		5	-5.55	-4.87	0.00	0.00	0.00	18.42
	303	2	7.13	-2.22	0.00	0.00	0.00	0.00
		5	-5.88	-5.01	0.00	0.00	0.00	19.77
	304	2	7.47	-2.12	0.00	0.00	0.00	0.00
		5	-6.22	-5.11	0.00	0.00	0.00	20.78
	305	2	7.80	-2.05	0.00	0.00	0.00	0.00
		5	-6.56	-5.18	0.00	0.00	0.00	21.46
	306	2	8.14	-2.02	0.00	0.00	0.00	0.00
		5	-6.90	-5.21	0.00	0.00	0.00	21.80
	307	2	8.41	-1.97	0.00	0.00	0.00	0.00
		5	-7.16	-5.26	0.00	0.00	0.00	22.29
	308	2	9.08	-1.79	0.00	0.00	0.00	0.00
		5	-7.84	-5.44	0.00	0.00	0.00	24.12
	309	2	9.76	-1.67	0.00	0.00	0.00	0.00
		5	-8.51	-5.56	0.00	0.00	0.00	25.27
	310	2	10.43	-1.62	0.00	0.00	0.00	0.00
		5	-9.19	-5.61	0.00	0.00	0.00	25.75
	311	2	11.10	-1.64	0.00	0.00	0.00	0.00
		5	-9.86	-5.59	0.00	0.00	0.00	25.55
	400	2	6.12	1.63	0.00	0.00	0.00	0.00
		5	-4.87	-1.08	0.00	0.00	0.00	11.26
	401	2	6.46	1.83	0.00	0.00	0.00	0.00
		5	-5.21	-1.28	0.00	0.00	0.00	13.28
	402	2	6.79	2.00	0.00	0.00	0.00	0.00
		5	-5.55	-1.45	0.00	0.00	0.00	14.97
	403	2	7.13	2.14	0.00	0.00	0.00	0.00
		5	-5.88	-1.59	0.00	0.00	0.00	16.32
	404	2	7.47	2.24	0.00	0.00	0.00	0.00
		5	-6.22	-1.69	0.00	0.00	0.00	17.33
	405	2	7.80	2.30	0.00	0.00	0.00	0.00
		5	-6.56	-1.75	0.00	0.00	0.00	18.01
	406	2	8.14	2.34	0.00	0.00	0.00	0.00
		5	-6.90	-1.79	0.00	0.00	0.00	18.34
	407	2	8.41	2.39	0.00	0.00	0.00	0.00
		5	-7.16	-1.84	0.00	0.00	0.00	18.84
	408	2	9.08	2.57	0.00	0.00	0.00	0.00
		5	-7.84	-2.02	0.00	0.00	0.00	20.67
	409	2	9.76	2.69	0.00	0.00	0.00	0.00
		5	-8.51	-2.14	0.00	0.00	0.00	21.82
	410	2	10.43	2.73	0.00	0.00	0.00	0.00
		5	-9.19	-2.18	0.00	0.00	0.00	22.30
	411	2	11.10	2.71	0.00	0.00	0.00	0.00
		5	-9.86	-2.16	0.00	0.00	0.00	22.10

MEMBER END FORCES STRUCTURE TYPE = SPACE

ALL UNITS ARE -- KIP FEET (LOCAL)

MEMBER	LOAD	JT	AXIAL	SHEAR-Y	SHEAR-Z	TORSION	MOM-Y	MOM-Z
	3000	2	6.10	-2.74	0.00	0.00	0.00	0.00
		5	-4.86	-4.49	0.00	0.00	0.00	14.61
	3001	2	6.37	-2.58	0.00	0.00	0.00	0.00
		5	-5.12	-4.65	0.00	0.00	0.00	16.19
	3002	2	6.68	-2.41	0.00	0.00	0.00	0.00
		5	-5.44	-4.82	0.00	0.00	0.00	17.87
	3003	2	7.21	-2.15	0.00	0.00	0.00	0.00
		5	-5.97	-5.08	0.00	0.00	0.00	20.50
	3004	2	7.74	-1.94	0.00	0.00	0.00	0.00
		5	-6.49	-5.29	0.00	0.00	0.00	22.61
	3005	2	8.26	-1.78	0.00	0.00	0.00	0.00
		5	-7.02	-5.45	0.00	0.00	0.00	24.19
	3006	2	8.79	-1.67	0.00	0.00	0.00	0.00
		5	-7.55	-5.56	0.00	0.00	0.00	25.25
	3007	2	9.21	-1.62	0.00	0.00	0.00	0.00
		5	-7.96	-5.61	0.00	0.00	0.00	25.80
	3008	2	9.73	-1.61	0.00	0.00	0.00	0.00
		5	-8.49	-5.62	0.00	0.00	0.00	25.91
	4000	2	6.10	1.62	0.00	0.00	0.00	0.00
		5	-4.86	-1.07	0.00	0.00	0.00	11.16
	4001	2	6.37	1.78	0.00	0.00	0.00	0.00
		5	-5.12	-1.23	0.00	0.00	0.00	12.74
	4002	2	6.68	1.94	0.00	0.00	0.00	0.00
		5	-5.44	-1.39	0.00	0.00	0.00	14.41
	4003	2	7.21	2.21	0.00	0.00	0.00	0.00
		5	-5.97	-1.66	0.00	0.00	0.00	17.05
	4004	2	7.74	2.42	0.00	0.00	0.00	0.00
		5	-6.49	-1.87	0.00	0.00	0.00	19.16
	4005	2	8.26	2.58	0.00	0.00	0.00	0.00
		5	-7.02	-2.03	0.00	0.00	0.00	20.74
	4006	2	8.79	2.68	0.00	0.00	0.00	0.00
		5	-7.55	-2.13	0.00	0.00	0.00	21.79
	4007	2	9.21	2.74	0.00	0.00	0.00	0.00
		5	-7.96	-2.19	0.00	0.00	0.00	22.35
	4008	2	9.73	2.75	0.00	0.00	0.00	0.00
		5	-8.49	-2.20	0.00	0.00	0.00	22.46
3	300	3	4.50	9.26	0.00	0.00	0.00	13.87
		4	-4.50	0.07	0.00	0.00	0.00	16.45
	301	3	4.71	8.92	0.00	0.00	0.00	16.17
		4	-4.71	0.41	0.00	0.00	0.00	18.81
	302	3	4.87	8.58	0.00	0.00	0.00	18.11
		4	-4.87	0.74	0.00	0.00	0.00	21.53
	303	3	5.01	8.24	0.00	0.00	0.00	19.69
		4	-5.01	1.08	0.00	0.00	0.00	24.61

MEMBER END FORCES STRUCTURE TYPE = SPACE

ALL UNITS ARE -- KIP FEET (LOCAL)

MEMBER	LOAD	JT	AXIAL	SHEAR-Y	SHEAR-Z	TORSION	MOM-Y	MOM-Z
	304	3	5.11	7.91	0.00	0.00	0.00	20.91
		4	-5.11	1.42	0.00	0.00	0.00	28.05
	305	3	5.18	7.57	0.00	0.00	0.00	21.77
		4	-5.18	1.76	0.00	0.00	0.00	31.86
	306	3	5.21	7.23	0.00	0.00	0.00	22.27
		4	-5.21	2.09	0.00	0.00	0.00	36.02
	307	3	5.26	11.49	0.00	0.00	0.00	21.03
		4	-5.26	-2.16	0.00	0.00	0.00	38.31
	308	3	5.44	10.81	0.00	0.00	0.00	23.26
		4	-5.44	-1.49	0.00	0.00	0.00	36.36
	309	3	5.56	10.14	0.00	0.00	0.00	24.77
		4	-5.56	-0.81	0.00	0.00	0.00	35.13
	310	3	5.61	9.47	0.00	0.00	0.00	25.56
		4	-5.61	-0.14	0.00	0.00	0.00	34.62
	311	3	5.59	8.79	0.00	0.00	0.00	25.62
		4	-5.59	0.53	0.00	0.00	0.00	34.83
	400	3	1.08	9.26	0.00	0.00	0.00	8.14
		4	-1.08	0.07	0.00	0.00	0.00	22.18
	401	3	1.28	8.92	0.00	0.00	0.00	10.44
		4	-1.28	0.41	0.00	0.00	0.00	24.54
	402	3	1.45	8.58	0.00	0.00	0.00	12.38
		4	-1.45	0.74	0.00	0.00	0.00	27.26
	403	3	1.59	8.24	0.00	0.00	0.00	13.95
		4	-1.59	1.08	0.00	0.00	0.00	30.34
	404	3	1.69	7.91	0.00	0.00	0.00	15.17
		4	-1.69	1.42	0.00	0.00	0.00	33.79
	405	3	1.75	7.57	0.00	0.00	0.00	16.03
		4	-1.75	1.76	0.00	0.00	0.00	37.59
	406	3	1.79	7.23	0.00	0.00	0.00	16.53
		4	-1.79	2.09	0.00	0.00	0.00	41.75
	407	3	1.84	11.49	0.00	0.00	0.00	15.30
		4	-1.84	-2.16	0.00	0.00	0.00	44.04
	408	3	2.02	10.81	0.00	0.00	0.00	17.53
		4	-2.02	-1.49	0.00	0.00	0.00	42.09
	409	3	2.14	10.14	0.00	0.00	0.00	19.03
		4	-2.14	-0.81	0.00	0.00	0.00	40.86
	410	3	2.18	9.47	0.00	0.00	0.00	19.82
		4	-2.18	-0.14	0.00	0.00	0.00	40.35
	411	3	2.16	8.79	0.00	0.00	0.00	19.89
		4	-2.16	0.53	0.00	0.00	0.00	40.56
	3000	3	4.49	8.28	0.00	0.00	0.00	14.17
		4	-4.49	0.05	0.00	0.00	0.00	16.35
	3001	3	4.65	8.02	0.00	0.00	0.00	15.96
		4	-4.65	0.32	0.00	0.00	0.00	18.19
	3002	3	4.82	11.23	0.00	0.00	0.00	16.42
		4	-4.82	0.64	0.00	0.00	0.00	20.67

MEMBER END FORCES STRUCTURE TYPE = SPACE

ALL UNITS ARE -- KIP FEET (LOCAL)

MEMBER	LOAD	JT	AXIAL	SHEAR-Y	SHEAR-Z	TORSION	MOM-Y	MOM-Z
	3003	3	5.08	10.71	0.00	0.00	0.00	19.44
		4	-5.08	1.16	0.00	0.00	0.00	24.92
	3004	3	5.29	10.18	0.00	0.00	0.00	21.91
		4	-5.29	1.69	0.00	0.00	0.00	29.74
	3005	3	5.45	9.65	0.00	0.00	0.00	23.82
		4	-5.45	2.22	0.00	0.00	0.00	35.12
	3006	3	5.56	9.13	0.00	0.00	0.00	25.16
		4	-5.56	2.74	0.00	0.00	0.00	41.06
	3007	3	5.61	8.71	0.00	0.00	0.00	25.93
		4	-5.61	-0.37	0.00	0.00	0.00	45.46
	3008	3	5.62	8.18	0.00	0.00	0.00	26.26
		4	-5.62	0.15	0.00	0.00	0.00	45.34
	4000	3	1.07	8.28	0.00	0.00	0.00	8.44
		4	-1.07	0.05	0.00	0.00	0.00	22.08
	4001	3	1.23	8.02	0.00	0.00	0.00	10.23
		4	-1.23	0.32	0.00	0.00	0.00	23.92
	4002	3	1.39	11.23	0.00	0.00	0.00	10.68
		4	-1.39	0.64	0.00	0.00	0.00	26.40
	4003	3	1.66	10.71	0.00	0.00	0.00	13.71
		4	-1.66	1.16	0.00	0.00	0.00	30.66
	4004	3	1.87	10.18	0.00	0.00	0.00	16.18
		4	-1.87	1.69	0.00	0.00	0.00	35.47
	4005	3	2.03	9.65	0.00	0.00	0.00	18.08
		4	-2.03	2.22	0.00	0.00	0.00	40.85
	4006	3	2.13	9.13	0.00	0.00	0.00	19.43
		4	-2.13	2.74	0.00	0.00	0.00	46.79
	4007	3	2.19	8.71	0.00	0.00	0.00	20.20
		4	-2.19	-0.37	0.00	0.00	0.00	51.19
	4008	3	2.20	8.18	0.00	0.00	0.00	20.53
		4	-2.20	0.15	0.00	0.00	0.00	51.07
4	300	5	4.50	4.87	0.00	0.00	0.00	15.69
		4	-4.50	-0.07	0.00	0.00	0.00	16.45
	301	5	4.71	5.21	0.00	0.00	0.00	17.71
		4	-4.71	-0.41	0.00	0.00	0.00	18.81
	302	5	4.87	5.55	0.00	0.00	0.00	19.37
		4	-4.87	-0.74	0.00	0.00	0.00	21.53
	303	5	5.01	5.88	0.00	0.00	0.00	20.67
		4	-5.01	-1.08	0.00	0.00	0.00	24.61
	304	5	5.11	6.22	0.00	0.00	0.00	21.61
		4	-5.11	-1.42	0.00	0.00	0.00	28.05
	305	5	5.18	6.56	0.00	0.00	0.00	22.19
		4	-5.18	-1.76	0.00	0.00	0.00	31.86
	306	5	5.21	6.90	0.00	0.00	0.00	22.41
		4	-5.21	-2.09	0.00	0.00	0.00	36.02

MEMBER END FORCES STRUCTURE TYPE = SPACE

ALL UNITS ARE -- KIP FEET (LOCAL)

MEMBER	LOAD	JT	AXIAL	SHEAR-Y	SHEAR-Z	TORSION	MOM-Y	MOM-Z
	307	5	5.26	7.16	0.00	0.00	0.00	22.83
		4	-5.26	2.16	0.00	0.00	0.00	38.31
	308	5	5.44	7.84	0.00	0.00	0.00	24.49
		4	-5.44	1.49	0.00	0.00	0.00	36.36
	309	5	5.56	8.51	0.00	0.00	0.00	25.44
		4	-5.56	0.81	0.00	0.00	0.00	35.13
	310	5	5.61	9.19	0.00	0.00	0.00	25.67
		4	-5.61	0.14	0.00	0.00	0.00	34.62
	311	5	5.59	9.86	0.00	0.00	0.00	25.18
		4	-5.59	-0.53	0.00	0.00	0.00	34.83
	400	5	1.08	4.87	0.00	0.00	0.00	9.96
		4	-1.08	-0.07	0.00	0.00	0.00	22.18
	401	5	1.28	5.21	0.00	0.00	0.00	11.97
		4	-1.28	-0.41	0.00	0.00	0.00	24.54
	402	5	1.45	5.55	0.00	0.00	0.00	13.63
		4	-1.45	-0.74	0.00	0.00	0.00	27.26
	403	5	1.59	5.88	0.00	0.00	0.00	14.93
		4	-1.59	-1.08	0.00	0.00	0.00	30.34
	404	5	1.69	6.22	0.00	0.00	0.00	15.87
		4	-1.69	-1.42	0.00	0.00	0.00	33.79
	405	5	1.75	6.56	0.00	0.00	0.00	16.45
		4	-1.75	-1.76	0.00	0.00	0.00	37.59
	406	5	1.79	6.90	0.00	0.00	0.00	16.67
		4	-1.79	-2.09	0.00	0.00	0.00	41.75
	407	5	1.84	7.16	0.00	0.00	0.00	17.09
		4	-1.84	2.16	0.00	0.00	0.00	44.04
	408	5	2.02	7.84	0.00	0.00	0.00	18.76
		4	-2.02	1.49	0.00	0.00	0.00	42.09
	409	5	2.14	8.51	0.00	0.00	0.00	19.71
		4	-2.14	0.81	0.00	0.00	0.00	40.86
	410	5	2.18	9.19	0.00	0.00	0.00	19.94
		4	-2.18	0.14	0.00	0.00	0.00	40.35
	411	5	2.16	9.86	0.00	0.00	0.00	19.45
		4	-2.16	-0.53	0.00	0.00	0.00	40.56
	3000	5	4.49	4.86	0.00	0.00	0.00	15.59
		4	-4.49	-0.05	0.00	0.00	0.00	16.35
	3001	5	4.65	5.12	0.00	0.00	0.00	17.16
		4	-4.65	-0.32	0.00	0.00	0.00	18.19
	3002	5	4.82	5.44	0.00	0.00	0.00	18.82
		4	-4.82	-0.64	0.00	0.00	0.00	20.67
	3003	5	5.08	5.97	0.00	0.00	0.00	21.41
		4	-5.08	-1.16	0.00	0.00	0.00	24.92
	3004	5	5.29	6.49	0.00	0.00	0.00	23.44
		4	-5.29	-1.69	0.00	0.00	0.00	29.74
	3005	5	5.45	7.02	0.00	0.00	0.00	24.91
		4	-5.45	-2.22	0.00	0.00	0.00	35.12

MEMBER END FORCES STRUCTURE TYPE = SPACE

ALL UNITS ARE -- KIP FEET (LOCAL)

MEMBER	LOAD	JT	AXIAL	SHEAR-Y	SHEAR-Z	TORSION	MOM-Y	MOM-Z
	3006	5	5.56	7.55	0.00	0.00	0.00	25.81
		4	-5.56	-2.74	0.00	0.00	0.00	41.06
	3007	5	5.61	7.96	0.00	0.00	0.00	26.24
		4	-5.61	0.37	0.00	0.00	0.00	45.46
	3008	5	5.62	8.49	0.00	0.00	0.00	26.14
		4	-5.62	-0.15	0.00	0.00	0.00	45.34
	4000	5	1.07	4.86	0.00	0.00	0.00	9.86
		4	-1.07	-0.05	0.00	0.00	0.00	22.08
	4001	5	1.23	5.12	0.00	0.00	0.00	11.43
		4	-1.23	-0.32	0.00	0.00	0.00	23.92
	4002	5	1.39	5.44	0.00	0.00	0.00	13.09
		4	-1.39	-0.64	0.00	0.00	0.00	26.40
	4003	5	1.66	5.97	0.00	0.00	0.00	15.68
		4	-1.66	-1.16	0.00	0.00	0.00	30.66
	4004	5	1.87	6.49	0.00	0.00	0.00	17.71
		4	-1.87	-1.69	0.00	0.00	0.00	35.47
	4005	5	2.03	7.02	0.00	0.00	0.00	19.18
		4	-2.03	-2.22	0.00	0.00	0.00	40.85
	4006	5	2.13	7.55	0.00	0.00	0.00	20.08
		4	-2.13	-2.74	0.00	0.00	0.00	46.79
	4007	5	2.19	7.96	0.00	0.00	0.00	20.51
		4	-2.19	0.37	0.00	0.00	0.00	51.19
	4008	5	2.20	8.49	0.00	0.00	0.00	20.40
		4	-2.20	-0.15	0.00	0.00	0.00	51.07

********** END OF LATEST ANALYSIS RESULT **********

```
396. ***
397. LOAD LIST 100 TO 111 200 TO 211 1000 TO 1008 2001 TO 2008
398. PRINT FORCE ENVELOPE NSECTION 4 ALL
```

MEMBER FORCE ENVELOPE

ALL UNITS ARE KIP FEET

MEMB	DISTANCE		FY	LD	MZ	LD	FZ	LD	MY	LD
1	0.00	MAX	3.99	1000	0.00	2008	0.00	2008	0.00	2008
		MIN	-4.09	2008	0.00	2008	0.00	2008	0.00	2008
	0.83	MAX	2.74	1000	3.34	2008	0.00	2008	0.00	2008
		MIN	-3.94	2008	-2.80	1000	0.00	2008	0.00	2008
	1.67	MAX	1.56	1000	6.57	2008	0.00	2008	0.00	2008
		MIN	-3.81	2008	-4.59	1000	0.00	2008	0.00	2008
	2.50	MAX	0.45	1000	9.69	2008	0.00	2008	0.00	2008
		MIN	-3.69	2008	-5.43	1000	0.00	2008	0.00	2008
	3.33	MAX	-0.60	1000	12.73	2008	0.00	2008	0.00	2008
		MIN	-3.60	2008	-5.36	1000	0.00	2008	0.00	2008
	4.17	MAX	-1.57	200	15.70	2008	0.00	2008	0.00	2008
		MIN	-3.56	1008	-4.45	1000	0.00	2008	0.00	2008
	5.00	MAX	-1.51	200	18.61	2008	0.00	2008	0.00	2008
		MIN	-4.47	1008	-2.75	1000	0.00	2008	0.00	2008
	5.83	MAX	-1.47	200	21.49	2008	0.00	2008	0.00	2008
		MIN	-5.32	1008	-0.31	1000	0.00	2008	0.00	2008
	6.67	MAX	-1.46	200	24.34	2008	0.00	2008	0.00	2008
		MIN	-6.11	1008	2.81	1000	0.00	2008	0.00	2008
	7.50	MAX	-1.46	200	27.19	2008	0.00	2008	0.00	2008
		MIN	-6.83	1008	6.55	1000	0.00	2008	0.00	2008
	8.33	MAX	-1.48	200	30.04	2008	0.00	2008	0.00	2008
		MIN	-7.48	1008	10.87	1000	0.00	2008	0.00	2008
	9.17	MAX	-1.52	200	33.83	1008	0.00	2008	0.00	2008
		MIN	-8.07	1008	14.95	200	0.00	2008	0.00	2008
	10.00	MAX	-1.57	200	40.78	1008	0.00	2008	0.00	2008
		MIN	-8.59	1008	16.24	200	0.00	2008	0.00	2008

MAX/MIN FORCE VALUES FOR MEMB 1, AMONGST ALL SECT LOCATIONS

	FY/ FZ	DIST DIST	LD LD	MZ/ MY	DIST DIST	LD LD	FX	DIST	LD
MAX.	3.99	0.00	1000	40.78	10.00	1008			
	0.00	0.00	100	0.00	0.00	100	20.20 C	0.00	107
MIN.	-8.59	10.00	1008	-5.43	2.50	1000			
	0.00	10.00	2008	0.00	10.00	2008	11.07 C	10.00	206

2	0.00	MAX	4.09	2008	0.00	2008	0.00	2008	0.00	2008
		MIN	-3.99	1000	0.00	2008	0.00	2008	0.00	2008
	0.83	MAX	3.94	2008	2.80	1000	0.00	2008	0.00	2008
		MIN	-2.74	1000	-3.34	2008	0.00	2008	0.00	2008

1.67	MAX	3.81	2008	4.59	1000	0.00	2008	0.00	2008
	MIN	-1.56	1000	-6.57	2008	0.00	2008	0.00	2008
2.50	MAX	3.69	2008	5.43	1000	0.00	2008	0.00	2008
	MIN	-0.45	1000	-9.69	2008	0.00	2008	0.00	2008
3.33	MAX	3.60	2008	5.36	1000	0.00	2008	0.00	2008
	MIN	0.60	1000	-12.73	2008	0.00	2008	0.00	2008
4.17	MAX	3.56	1008	4.45	1000	0.00	2008	0.00	2008
	MIN	1.57	200	-15.70	2008	0.00	2008	0.00	2008
5.00	MAX	4.47	1008	2.75	1000	0.00	2008	0.00	2008
	MIN	1.51	200	-18.61	2008	0.00	2008	0.00	2008
5.83	MAX	5.32	1008	0.31	1000	0.00	2008	0.00	2008
	MIN	1.47	200	-21.49	2008	0.00	2008	0.00	2008
6.67	MAX	6.11	1008	-2.81	1000	0.00	2008	0.00	2008
	MIN	1.46	200	-24.34	2008	0.00	2008	0.00	2008
7.50	MAX	6.83	1008	-6.55	1000	0.00	2008	0.00	2008
	MIN	1.46	200	-27.19	2008	0.00	2008	0.00	2008
8.33	MAX	7.48	1008	-10.87	1000	0.00	2008	0.00	2008
	MIN	1.48	200	-30.04	2008	0.00	2008	0.00	2008
9.17	MAX	8.07	1008	-14.95	200	0.00	2008	0.00	2008
	MIN	1.52	200	-33.83	1008	0.00	2008	0.00	2008
10.00	MAX	8.59	1008	-16.24	200	0.00	2008	0.00	2008
	MIN	1.57	200	-40.78	1008	0.00	2008	0.00	2008

MAX/MIN FORCE VALUES FOR MEMB 2, AMONGST ALL SECT LOCATIONS

	FY/ FZ	DIST DIST	LD LD	MZ/ MY	DIST DIST	LD LD	FX	DIST	LD
MAX.	8.59	10.00	1008	5.43	2.50	1000			
	0.00	0.00	100	0.00	0.00	100	17.35 C	0.00	111
MIN.	-3.99	0.00	1000	-40.78	10.00	1008			
	0.00	10.00	2008	0.00	10.00	2008	6.91 C	10.00	1000

3	0.00	MAX	18.51	207	41.22	1008	0.00	2008	0.00	2008
		MIN	11.07	206	11.23	200	0.00	2008	0.00	2008
	1.08	MAX	16.77	208	27.74	1008	0.00	2008	0.00	2008
		MIN	6.13	200	0.37	201	0.00	2008	0.00	2008
	2.17	MAX	15.09	2004	14.87	1008	0.00	2008	0.00	2008
		MIN	4.97	201	-13.91	2003	0.00	2008	0.00	2008
	3.25	MAX	14.52	2004	2.62	1008	0.00	2008	0.00	2008
		MIN	4.40	201	-24.66	2004	0.00	2008	0.00	2008
	4.33	MAX	13.03	2005	-4.16	1000	0.00	2008	0.00	2008
		MIN	3.24	202	-38.02	2004	0.00	2008	0.00	2008
	5.42	MAX	12.46	2005	-8.67	1000	0.00	2008	0.00	2008
		MIN	2.67	202	-46.56	2005	0.00	2008	0.00	2008
	6.50	MAX	10.97	2006	-12.57	1000	0.00	2008	0.00	2008
		MIN	1.37	2003	-56.67	2005	0.00	2008	0.00	2008
	7.58	MAX	10.40	2006	-15.85	1000	0.00	2008	0.00	2008
		MIN	0.81	2003	-63.00	2006	0.00	2008	0.00	2008
	8.67	MAX	9.11	2007	-18.52	1000	0.00	2008	0.00	2008
		MIN	-0.68	2004	-69.84	2006	0.00	2008	0.00	2008
	9.75	MAX	8.54	2007	-20.57	1000	0.00	2008	0.00	2008
		MIN	-1.25	2004	-75.84	2007	0.00	2008	0.00	2008

	10.83	MAX	7.05	2008	-22.00	1000	0.00	2008	0.00 2008
		MIN	-2.74	2005	-79.63	2007	0.00	2008	0.00 2008
	11.92	MAX	6.48	2008	-22.82	1000	0.00	2008	0.00 2008
		MIN	-3.31	2005	-81.54	2008	0.00	2008	0.00 2008
	13.00	MAX	3.78	207	-23.02	1000	0.00	2008	0.00 2008
		MIN	-4.80	2006	-82.27	2007	0.00	2008	0.00 2008

MAX/MIN FORCE VALUES FOR MEMB 3, AMONGST ALL SECT LOCATIONS

	FY/ FZ	DIST DIST	LD LD	MZ/ MY	DIST DIST	LD LD	FX	DIST	LD
MAX.	18.51	0.00	107	41.22	0.00	1008			
	0.00	0.00	100	0.00	0.00	100	8.59 C	0.00	1008
MIN.	-4.80	13.00	2006	-82.27	13.00	2007			
	0.00	13.00	2008	0.00	13.00	2008	1.57 C	13.00	200

4	0.00	MAX	15.67	211	41.17	1007	0.00	2008	0.00 2008
		MIN	6.91	1000	14.41	200	0.00	2008	0.00 2008
	1.08	MAX	15.10	211	28.15	1006	0.00	2008	0.00 2008
		MIN	6.35	1000	7.20	200	0.00	2008	0.00 2008
	2.17	MAX	14.53	211	16.90	1005	0.00	2008	0.00 2008
		MIN	5.78	1000	-1.69	211	0.00	2008	0.00 2008
	3.25	MAX	13.96	211	7.28	1004	0.00	2008	0.00 2008
		MIN	5.21	1000	-17.13	211	0.00	2008	0.00 2008
	4.33	MAX	13.39	211	-0.71	1003	0.00	2008	0.00 2008
		MIN	4.64	1000	-31.94	211	0.00	2008	0.00 2008
	5.42	MAX	11.65	210	-6.85	101	0.00	2008	0.00 2008
		MIN	4.07	1000	-41.50	211	0.00	2008	0.00 2008
	6.50	MAX	11.08	210	-11.32	100	0.00	2008	0.00 2008
		MIN	3.50	1000	-51.20	210	0.00	2008	0.00 2008
	7.58	MAX	9.33	209	-14.81	1000	0.00	2008	0.00 2008
		MIN	2.60	210	-56.94	210	0.00	2008	0.00 2008
	8.67	MAX	8.76	209	-17.69	1000	0.00	2008	0.00 2008
		MIN	2.03	210	-64.15	209	0.00	2008	0.00 2008
	9.75	MAX	8.15	2008	-19.94	1000	0.00	2008	0.00 2008
		MIN	0.28	209	-71.75	2008	0.00	2008	0.00 2008
	10.83	MAX	6.67	2007	-21.59	1000	0.00	2008	0.00 2008
		MIN	-1.47	208	-80.25	2008	0.00	2008	0.00 2008
	11.92	MAX	6.10	2007	-22.61	1000	0.00	2008	0.00 2008
		MIN	-2.04	208	-81.47	2008	0.00	2008	0.00 2008
	13.00	MAX	4.80	2006	-23.02	1000	0.00	2008	0.00 2008
		MIN	-3.78	207	-82.27	2007	0.00	2008	0.00 2008

MAX/MIN FORCE VALUES FOR MEMB 4, AMONGST ALL SECT LOCATIONS

	FY/ FZ	DIST DIST	LD LD	MZ/ MY	DIST DIST	LD LD	FX	DIST	LD

MAX.	15.67	0.00	111	41.17	0.00	1007			
	0.00	0.00	100	0.00	0.00	100	8.59 C	0.00	1008
MIN.	-3.78	13.00	207	-82.27	13.00	2007			
	0.00	13.00	2008	0.00	13.00	2008	1.57 C	13.00	200

********** END OF FORCE ENVELOPE FROM INTERNAL STORAGE **********

399. LOAD LIST 300 TO 311 400 TO 411 3000 TO 3008 4000 TO 4008
400. PRINT FORCE ENVELOPE NSECTION 4 ALL

MEMBER FORCE ENVELOPE

ALL UNITS ARE KIP FEET

MEMB	DISTANCE		FY	LD	MZ	LD	FZ	LD	MY	LD
1	0.00	MAX	2.74	3000	0.00	4008	0.00	4008	0.00	4008
		MIN	-2.75	4008	0.00	4008	0.00	4008	0.00	4008
	0.83	MAX	1.87	3000	2.23	4008	0.00	4008	0.00	4008
		MIN	-2.60	4008	-1.92	3000	0.00	4008	0.00	4008
	1.67	MAX	1.05	3000	4.34	4008	0.00	4008	0.00	4008
		MIN	-2.47	4008	-3.13	3000	0.00	4008	0.00	4008
	2.50	MAX	0.27	3000	6.35	4008	0.00	4008	0.00	4008
		MIN	-2.36	4008	-3.67	3000	0.00	4008	0.00	4008
	3.33	MAX	-0.45	3000	8.27	4008	0.00	4008	0.00	4008
		MIN	-2.26	4008	-3.59	3000	0.00	4008	0.00	4008
	4.17	MAX	-1.06	4000	10.12	4008	0.00	4008	0.00	4008
		MIN	-2.26	3008	-2.93	3000	0.00	4008	0.00	4008
	5.00	MAX	-1.00	4000	11.92	4008	0.00	4008	0.00	4008
		MIN	-2.88	3008	-1.73	3000	0.00	4008	0.00	4008
	5.83	MAX	-0.97	4000	13.68	4008	0.00	4008	0.00	4008
		MIN	-3.46	3008	-0.03	3000	0.00	4008	0.00	4008
	6.67	MAX	-0.95	4000	15.42	4008	0.00	4008	0.00	4008
		MIN	-3.99	3008	2.14	3000	0.00	4008	0.00	4008
	7.50	MAX	-0.95	4000	17.15	4008	0.00	4008	0.00	4008
		MIN	-4.47	3008	4.73	3000	0.00	4008	0.00	4008
	8.33	MAX	-0.97	4000	18.89	4008	0.00	4008	0.00	4008
		MIN	-4.90	3008	7.70	3000	0.00	4008	0.00	4008
	9.17	MAX	-1.01	4000	21.36	3008	0.00	4008	0.00	4008
		MIN	-5.29	3008	10.30	4000	0.00	4008	0.00	4008
	10.00	MAX	-1.07	4000	25.91	3008	0.00	4008	0.00	4008
		MIN	-5.62	3008	11.16	4000	0.00	4008	0.00	4008

MAX/MIN FORCE VALUES FOR MEMB 1, AMONGST ALL SECT LOCATIONS

	FY/ FZ	DIST DIST	LD LD	MZ/ MY	DIST DIST	LD LD	FX	DIST	LD
MAX.	2.74	0.00	3000	25.91	10.00	3008			
	0.00	0.00	300	0.00	0.00	300	12.73 C	0.00	307
MIN.	-5.62	10.00	3008	-3.67	2.50	3000			
	0.00	10.00	4008	0.00	10.00	4008	7.23 C	10.00	306

2	0.00	MAX	2.75	4008	0.00	4008	0.00	4008	0.00	4008
		MIN	-2.74	3000	0.00	4008	0.00	4008	0.00	4008
	0.83	MAX	2.60	4008	1.92	3000	0.00	4008	0.00	4008
		MIN	-1.87	3000	-2.23	4008	0.00	4008	0.00	4008

1.67	MAX	2.47	4008	3.13	3000	0.00	4008	0.00	4008
	MIN	-1.05	3000	-4.34	4008	0.00	4008	0.00	4008
2.50	MAX	2.36	4008	3.67	3000	0.00	4008	0.00	4008
	MIN	-0.27	3000	-6.35	4008	0.00	4008	0.00	4008
3.33	MAX	2.26	4008	3.59	3000	0.00	4008	0.00	4008
	MIN	0.45	3000	-8.27	4008	0.00	4008	0.00	4008
4.17	MAX	2.26	3008	2.93	3000	0.00	4008	0.00	4008
	MIN	1.06	4000	-10.12	4008	0.00	4008	0.00	4008
5.00	MAX	2.88	3008	1.73	3000	0.00	4008	0.00	4008
	MIN	1.00	4000	-11.92	4008	0.00	4008	0.00	4008
5.83	MAX	3.46	3008	0.03	3000	0.00	4008	0.00	4008
	MIN	0.97	4000	-13.68	4008	0.00	4008	0.00	4008
6.67	MAX	3.99	3008	-2.14	3000	0.00	4008	0.00	4008
	MIN	0.95	4000	-15.42	4008	0.00	4008	0.00	4008
7.50	MAX	4.47	3008	-4.73	3000	0.00	4008	0.00	4008
	MIN	0.95	4000	-17.15	4008	0.00	4008	0.00	4008
8.33	MAX	4.90	3008	-7.70	3000	0.00	4008	0.00	4008
	MIN	0.97	4000	-18.89	4008	0.00	4008	0.00	4008
9.17	MAX	5.29	3008	-10.30	4000	0.00	4008	0.00	4008
	MIN	1.01	4000	-21.36	3008	0.00	4008	0.00	4008
10.00	MAX	5.62	3008	-11.16	4000	0.00	4008	0.00	4008
	MIN	1.07	4000	-25.91	3008	0.00	4008	0.00	4008

MAX/MIN FORCE VALUES FOR MEMB 2, AMONGST ALL SECT LOCATIONS

	FY/ FZ	DIST DIST	LD LD	MZ/ MY	DIST DIST	LD LD	FX	DIST	LD
MAX.	5.62	10.00	3008	3.67	2.50	3000			
	0.00	0.00	300	0.00	0.00	300	11.10 C	0.00	311
MIN.	-2.74	0.00	3000	-25.91	10.00	3008			
	0.00	10.00	4008	0.00	10.00	4008	4.86 C	10.00	3000

3	0.00	MAX	11.49	407	26.26	3008	0.00	4008	0.00	4008
		MIN	7.23	306	8.14	400	0.00	4008	0.00	4008
	1.08	MAX	10.41	408	17.62	3008	0.00	4008	0.00	4008
		MIN	4.33	400	0.99	401	0.00	4008	0.00	4008
	2.17	MAX	9.38	4004	9.40	3008	0.00	4008	0.00	4008
		MIN	3.60	401	-8.03	4003	0.00	4008	0.00	4008
	3.25	MAX	8.98	3004	1.62	3008	0.00	4008	0.00	4008
		MIN	3.20	401	-14.95	4004	0.00	4008	0.00	4008
	4.33	MAX	8.05	4005	-2.94	3000	0.00	4008	0.00	4008
		MIN	2.46	402	-23.28	4004	0.00	4008	0.00	4008
	5.42	MAX	7.65	4005	-6.14	3000	0.00	4008	0.00	4008
		MIN	2.06	402	-28.78	4005	0.00	4008	0.00	4008
	6.50	MAX	6.72	4006	-8.90	3000	0.00	4008	0.00	4008
		MIN	1.24	4003	-35.08	4005	0.00	4008	0.00	4008
	7.58	MAX	6.32	4006	-11.22	3000	0.00	4008	0.00	4008
		MIN	0.84	4003	-39.15	4006	0.00	4008	0.00	4008
	8.67	MAX	5.51	4007	-13.11	3000	0.00	4008	0.00	4008
		MIN	-0.09	4004	-43.43	4006	0.00	4008	0.00	4008
	9.75	MAX	5.11	4007	-14.57	3000	0.00	4008	0.00	4008
		MIN	-0.49	3004	-47.14	4007	0.00	4008	0.00	4008

	10.83	MAX	4.18	4008	-15.60	3000	0.00	4008	0.00 4008
		MIN	-1.41	3005	-49.52	4007	0.00	4008	0.00 4008
	11.92	MAX	3.78	3008	-16.19	3000	0.00	4008	0.00 4008
		MIN	-1.82	3005	-50.73	4008	0.00	4008	0.00 4008
	13.00	MAX	2.16	407	-16.35	3000	0.00	4008	0.00 4008
		MIN	-2.74	4006	-51.19	4007	0.00	4008	0.00 4008

MAX/MIN FORCE VALUES FOR MEMB 3, AMONGST ALL SECT LOCATIONS

	FY/ FZ	DIST DIST	LD LD	MZ/ MY	DIST DIST	LD LD	FX	DIST	LD
MAX.	11.49	0.00	307	26.26	0.00	3008			
	0.00	0.00	300	0.00	0.00	300	5.62 C	0.00	3008
MIN.	-2.74	13.00	4006	-51.19	13.00	4007			
	0.00	13.00	4008	0.00	13.00	4008	1.07 C	13.00	4000

4	0.00	MAX	9.86	311	26.24	3007	0.00	4008	0.00 4008
		MIN	4.86	3000	9.86	4000	0.00	4008	0.00 4008
	1.08	MAX	9.46	411	17.86	3006	0.00	4008	0.00 4008
		MIN	4.46	4000	4.81	4000	0.00	4008	0.00 4008
	2.17	MAX	9.06	411	10.57	3005	0.00	4008	0.00 4008
		MIN	4.06	4000	-1.05	411	0.00	4008	0.00 4008
	3.25	MAX	8.66	411	4.29	3004	0.00	4008	0.00 4008
		MIN	3.66	4000	-10.64	411	0.00	4008	0.00 4008
	4.33	MAX	8.26	411	-0.97	3003	0.00	4008	0.00 4008
		MIN	3.26	4000	-19.81	411	0.00	4008	0.00 4008
	5.42	MAX	7.18	410	-5.10	301	0.00	4008	0.00 4008
		MIN	2.86	4000	-25.88	411	0.00	4008	0.00 4008
	6.50	MAX	6.78	410	-8.18	300	0.00	4008	0.00 4008
		MIN	2.46	4000	-31.96	410	0.00	4008	0.00 4008
	7.58	MAX	5.71	409	-10.63	3000	0.00	4008	0.00 4008
		MIN	1.86	410	-35.69	410	0.00	4008	0.00 4008
	8.67	MAX	5.31	409	-12.64	3000	0.00	4008	0.00 4008
		MIN	1.46	410	-40.18	409	0.00	4008	0.00 4008
	9.75	MAX	4.89	4008	-14.22	3000	0.00	4008	0.00 4008
		MIN	0.39	409	-44.81	4008	0.00	4008	0.00 4008
	10.83	MAX	3.96	4007	-15.36	3000	0.00	4008	0.00 4008
		MIN	-0.69	308	-49.87	4008	0.00	4008	0.00 4008
	11.92	MAX	3.56	4007	-16.07	3000	0.00	4008	0.00 4008
		MIN	-1.09	308	-50.69	4008	0.00	4008	0.00 4008
	13.00	MAX	2.74	4006	-16.35	3000	0.00	4008	0.00 4008
		MIN	-2.16	407	-51.19	4007	0.00	4008	0.00 4008

MAX/MIN FORCE VALUES FOR MEMB 4, AMONGST ALL SECT LOCATIONS

FY/ FZ	DIST DIST	LD LD	MZ/ MY	DIST DIST	LD LD	FX	DIST	LD

```
| MAX.       9.86   0.00  311      26.24   0.00 3007
|            0.00   0.00  300       0.00   0.00  300      5.62 C   0.00 3008
| MIN.      -2.16  13.00  407     -51.19  13.00 4007
|            0.00  13.00 4008       0.00  13.00 4008      1.07 C  13.00 4000
|-----------------------------------------------------------------------------
```

********** END OF FORCE ENVELOPE FROM INTERNAL STORAGE **********

401. FINISH

********** END OF THE STAAD.Pro RUN **********

**** DATE= APR 1,2015 TIME= 9:50:49 ****

```
************************************************************
*   For technical assistance on STAAD.Pro, please visit    *
*   http://selectservices.bentley.com/en-US/               *
*                                                          *
*   Details about additional assistance from               *
*   Bentley and Partners can be found at program menu      *
*   Help->Technical Support                                *
*                                                          *
*      Copyright (c) 1997-2014 Bentley Systems, Inc.
*                http://www.bentley.com                    *
************************************************************
```

Software licensed to	Job No	Sheet No 1	Rev
	Part		
Job Title	Ref		
	By BK	Date 03/16/15	Chd
Client	File 26x10-HL93-fixed.std	Date/Time 16-Mar-2015 13:56	

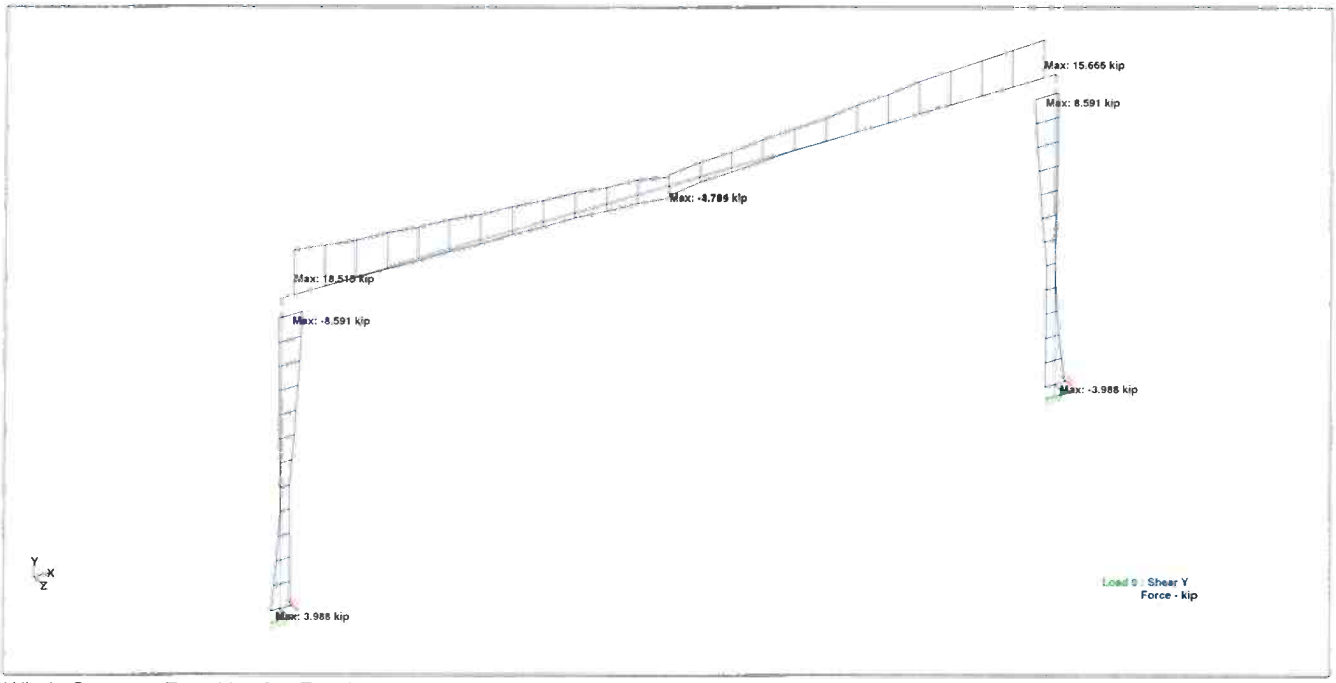

Whole Structure Fy 12kip:1ft 0 Envelope

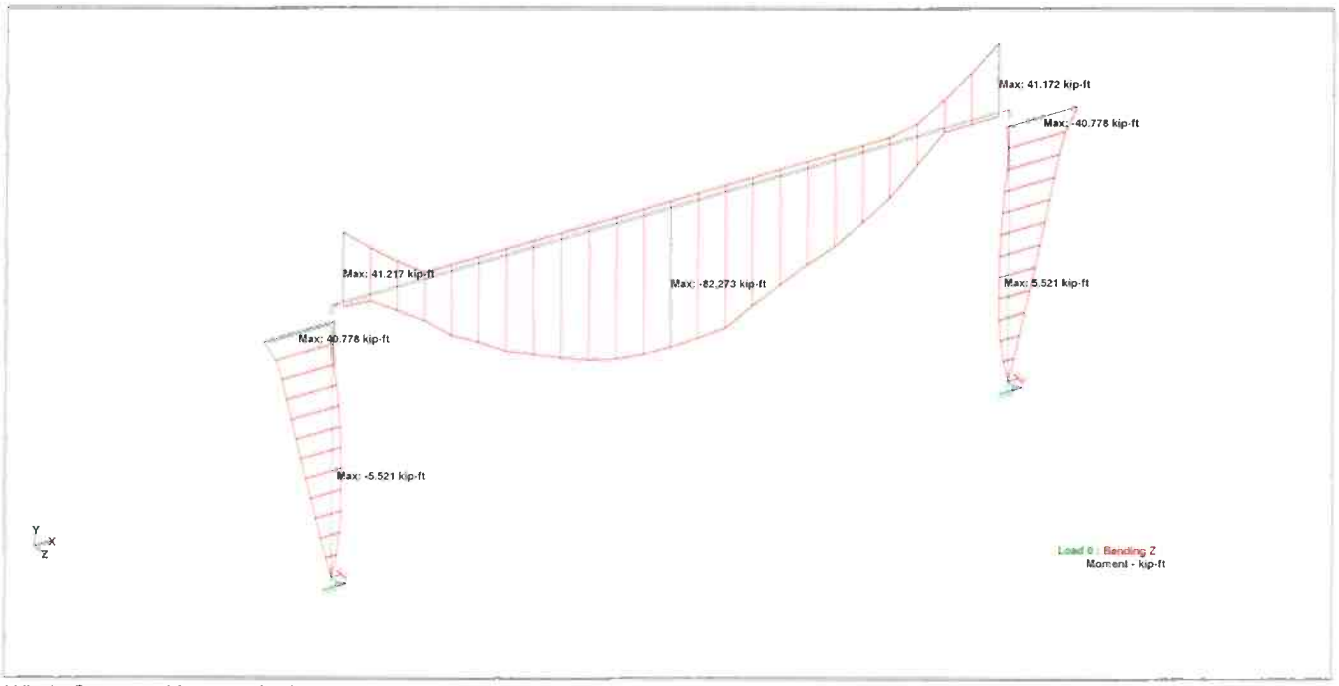

Whole Structure Mz 15kip-ft:1ft 0 Envelope

Section 4
STAAD Pro Output Spring
26’ x 10’ 3-Sided Culvert: HL93
0.5’-1’ Earth Cover Incl. BM & SF diagrams

```
****************************************************
*                                                  *
*           STAAD.Pro V8i SELECTseries5            *
*           Version  20.07.10.65                   *
*           Proprietary Program of                 *
*           Bentley Systems, Inc.                  *
*           Date=    APR  1, 2015                  *
*           Time=     9:55:14                      *
*                                                  *
*      USER ID:                                    *
****************************************************
```

```
     1. STAAD SPACE
INPUT FILE: 26x10-HL93-Spring.STD
     2. START JOB INFORMATION
     3. ENGINEER DATE 03/16/15
     4. ENGINEER NAME BK
     5. END JOB INFORMATION
     6. INPUT WIDTH 79
     7. UNIT FEET KIP
     8. JOINT COORDINATES
     9. 1 -13.415 0 0; 2 13.415 0 0; 3 -13.415 10.666 0; 4 0 10.666 0
    10. 5 13.415 10.666 0
    11. MEMBER INCIDENCES
    12. 1 1 3; 2 2 5; 3 3 4; 4 5 4
    13. DEFINE MATERIAL START
    14. ISOTROPIC CONCRETE5000
    15. E 580390
    16. POISSON 0.17
    17. DENSITY 0.15
    18. ALPHA 5.5E-006
    19. DAMP 0.05
    20. END DEFINE MATERIAL
    21. MEMBER PROPERTY AMERICAN
    22. 1 2 PRIS YD 0.83 ZD 1
    23. 3 4 PRIS YD 1.33 ZD 1
    24. CONSTANTS
    25. MATERIAL CONCRETE5000 ALL
    26. SUPPORTS
    27. 1 FIXED BUT MZ
    28. 2 FIXED BUT MZ KFX 200
    29. MEMBER OFFSET
    30. 3 START 0.415 0 0
    31. 4 START -0.415 0 0
    32. 1 END 0 -0.666 0
    33. 2 END 0 -0.666 0
    34. DEFINE MOVING LOAD
    35. ***TRUCK
    36. TYPE 1 LOAD 1.13 4.522 4.522
    37. DIST 14 14
    38. ***TANDEM
```

```
 39. TYPE 2 LOAD 3.532 3.532
 40. DIST 4
 41. ***
 42. LOAD 1 LOADTYPE NONE  TITLE LOAD CASE 1- UNIFORM LOAD -COVER 1.0FT
 43. MEMBER LOAD
 44. 3 4 UNI GY -0.106
 45. SELFWEIGHT Y -1
 46. LOAD 2 LOADTYPE NONE  TITLE -EMAX
 47. MEMBER LOAD
 48. 2 TRAP GX -0.863 -0.163
 49. 1 TRAP GX 0.863 0.163
 50. LOAD 3 LOADTYPE NONE  TITLE -EMIN
 51. MEMBER LOAD
 52. 2 TRAP GX -0.432 -0.082
 53. 1 TRAP GX 0.432 0.082
 54. LOAD 4 LOADTYPE NONE  TITLE -AWL
 55. MEMBER LOAD
 56. 2 UNI GX -0.21
 57. 1 UNI GX 0.21
 58. LOAD 5 LOADTYPE NONE  TITLE -IPF-WATER INSIDE
 59. MEMBER LOAD
 60. 2 TRAP GX 0.624 0 0
 61. 1 TRAP GX -0.624 0 0
 62. LOAD 6 LOADTYPE NONE  TITLE LOAD CASE LANE
 63. MEMBER LOAD
 64. 3 4 UNI GY -0.064
 65. LOAD 10 LOADTYPE LIVE  TITLE LOAD CASE TRUCK
 66. LOAD GENERATION 12
 67. TYPE 1 -41.415 10.666 0 XINC 2
 68. LOAD 30 LOADTYPE LIVE  TITLE LOAD CASE TANDEM
**WARNING-A MOVING LOAD THAT WOULD HAVE BEEN APPLIED BEYOND THE X AND Z RANGES
          OF THE STRUCTURE HAS BEEN IGNORED. CASE=   11 WHEEL   1 OF   3
**WARNING-A MOVING LOAD THAT WOULD HAVE BEEN APPLIED BEYOND THE X AND Z RANGES
          OF THE STRUCTURE HAS BEEN IGNORED. CASE=   11 WHEEL   2 OF   3
**WARNING-A MOVING LOAD THAT WOULD HAVE BEEN APPLIED BEYOND THE X AND Z RANGES
          OF THE STRUCTURE HAS BEEN IGNORED. CASE=   12 WHEEL   1 OF   3
**WARNING-A MOVING LOAD THAT WOULD HAVE BEEN APPLIED BEYOND THE X AND Z RANGES
          OF THE STRUCTURE HAS BEEN IGNORED. CASE=   12 WHEEL   2 OF   3
**WARNING-A MOVING LOAD THAT WOULD HAVE BEEN APPLIED BEYOND THE X AND Z RANGES
          OF THE STRUCTURE HAS BEEN IGNORED. CASE=   13 WHEEL   1 OF   3
**WARNING-A MOVING LOAD THAT WOULD HAVE BEEN APPLIED BEYOND THE X AND Z RANGES
          OF THE STRUCTURE HAS BEEN IGNORED. CASE=   13 WHEEL   2 OF   3
**WARNING-A MOVING LOAD THAT WOULD HAVE BEEN APPLIED BEYOND THE X AND Z RANGES
          OF THE STRUCTURE HAS BEEN IGNORED. CASE=   14 WHEEL   1 OF   3
**WARNING-A MOVING LOAD THAT WOULD HAVE BEEN APPLIED BEYOND THE X AND Z RANGES
          OF THE STRUCTURE HAS BEEN IGNORED. CASE=   14 WHEEL   2 OF   3
**WARNING-A MOVING LOAD THAT WOULD HAVE BEEN APPLIED BEYOND THE X AND Z RANGES
          OF THE STRUCTURE HAS BEEN IGNORED. CASE=   15 WHEEL   1 OF   3
**WARNING-A MOVING LOAD THAT WOULD HAVE BEEN APPLIED BEYOND THE X AND Z RANGES
          OF THE STRUCTURE HAS BEEN IGNORED. CASE=   15 WHEEL   2 OF   3
*ADDITIONAL MOVING LOAD MESSAGES SUPPRESSED
*ADDITIONAL MOVING LOAD MESSAGES SUPPRESSED
 69. LOAD GENERATION 9
 70. TYPE 2 -17.415 10.666 0 XINC 2
 71. ***TRUCK
 72. LOAD COMB 100 COMBINATION LOAD CASE -MAX MOMENT OUTSIDE
```

```
 73. 11 1.75 6 1.75 1 1.35 2 1.35 4 1.75
 74. LOAD COMB 101 COMBINATION LOAD CASE
 75. 12 1.75 6 1.75 1 1.35 2 1.35 4 1.75
 76. LOAD COMB 102 COMBINATION LOAD CASE
 77. 13 1.75 6 1.75 1 1.35 2 1.35 4 1.75
 78. LOAD COMB 103 COMBINATION LOAD CASE
 79. 14 1.75 6 1.75 1 1.35 2 1.35 4 1.75
 80. LOAD COMB 104 COMBINATION LOAD CASE
 81. 15 1.75 6 1.75 1 1.35 2 1.35 4 1.75
 82. LOAD COMB 105 COMBINATION LOAD CASE
 83. 16 1.75 6 1.75 1 1.35 2 1.35 4 1.75
 84. LOAD COMB 106 COMBINATION LOAD CASE
 85. 17 1.75 6 1.75 1 1.35 2 1.35 4 1.75
 86. LOAD COMB 107 COMBINATION LOAD CASE
 87. 18 1.75 6 1.75 1 1.35 2 1.35 4 1.75
 88. LOAD COMB 108 COMBINATION LOAD CASE
 89. 19 1.75 6 1.75 1 1.35 2 1.35 4 1.75
 90. LOAD COMB 109 COMBINATION LOAD CASE
 91. 20 1.75 6 1.75 1 1.35 2 1.35 4 1.75
 92. LOAD COMB 110 COMBINATION LOAD CASE
 93. 21 1.75 6 1.75 1 1.35 2 1.35 4 1.75
 94. LOAD COMB 111 COMBINATION LOAD CASE
 95. 22 1.75 6 1.75 1 1.35 2 1.35 4 1.75
 96. ***
 97. LOAD COMB 200 COMBINATION LOAD CASE -MAX MOMENT INSIDE
 98. 11 1.75 6 1.75 1 1.35 2 0.5 5 1.0
 99. LOAD COMB 201 COMBINATION LOAD CASE
100. 12 1.75 6 1.75 1 1.35 2 0.5 5 1.0
101. LOAD COMB 202 COMBINATION LOAD CASE
102. 13 1.75 6 1.75 1 1.35 2 0.5 5 1.0
103. LOAD COMB 203 COMBINATION LOAD CASE
104. 14 1.75 6 1.75 1 1.35 2 0.5 5 1.0
105. LOAD COMB 204 COMBINATION LOAD CASE
106. 15 1.75 6 1.75 1 1.35 2 0.5 5 1.0
107. LOAD COMB 205 COMBINATION LOAD CASE
108. 16 1.75 6 1.75 1 1.35 2 0.5 5 1.0
109. LOAD COMB 206 COMBINATION LOAD CASE
110. 17 1.75 6 1.75 1 1.35 2 0.5 5 1.0
111. LOAD COMB 207 COMBINATION LOAD CASE
112. 18 1.75 6 1.75 1 1.35 2 0.5 5 1.0
113. LOAD COMB 208 COMBINATION LOAD CASE
114. 19 1.75 6 1.75 1 1.35 2 0.5 5 1.0
115. LOAD COMB 209 COMBINATION LOAD CASE
116. 20 1.75 6 1.75 1 1.35 2 0.5 5 1.0
117. LOAD COMB 210 COMBINATION LOAD CASE
118. 21 1.75 6 1.75 1 1.35 2 0.5 5 1.0
119. LOAD COMB 211 COMBINATION LOAD CASE
120. 22 1.75 6 1.75 1 1.35 2 0.5 5 1.0
121. ***
122. LOAD COMB 300 COMBINATION LOAD CASE -CRACK CONTROL-MAX OUTSIDE
123. 11 1.0 6 1.0 1 1.0 2 1.0 4 1.0
124. LOAD COMB 301 COMBINATION LOAD CASE
125. 12 1.0 6 1.0 1 1.0 2 1.0 4 1.0
126. LOAD COMB 302 COMBINATION LOAD CASE
127. 13 1.0 6 1.0 1 1.0 2 1.0 4 1.0
128. LOAD COMB 303 COMBINATION LOAD CASE
```

```
129. 14 1.0 6 1.0 1 1.0 2 1.0 4 1.0
130. LOAD COMB 304 COMBINATION LOAD CASE
131. 15 1.0 6 1.0 1 1.0 2 1.0 4 1.0
132. LOAD COMB 305 COMBINATION LOAD CASE
133. 16 1.0 6 1.0 1 1.0 2 1.0 4 1.0
134. LOAD COMB 306 COMBINATION LOAD CASE
135. 17 1.0 6 1.0 1 1.0 2 1.0 4 1.0
136. LOAD COMB 307 COMBINATION LOAD CASE
137. 18 1.0 6 1.0 1 1.0 2 1.0 4 1.0
138. LOAD COMB 308 COMBINATION LOAD CASE
139. 19 1.0 6 1.0 1 1.0 2 1.0 4 1.0
140. LOAD COMB 309 COMBINATION LOAD CASE
141. 20 1.0 6 1.0 1 1.0 2 1.0 4 1.0
142. LOAD COMB 310 COMBINATION LOAD CASE
143. 21 1.0 6 1.0 1 1.0 2 1.0 4 1.0
144. LOAD COMB 311 COMBINATION LOAD CASE
145. 22 1.0 6 1.0 1 1.0 2 1.0 4 1.0
146. ***
147. LOAD COMB 400 COMBINATION LOAD CASE -CRACK CONTROL-MAX INSIDE
148. 11 1.0 3 1.0 1 1.0 6 1.0 5 1.0
149. LOAD COMB 401 COMBINATION LOAD CASE
150. 12 1.0 3 1.0 1 1.0 6 1.0 5 1.0
151. LOAD COMB 402 COMBINATION LOAD CASE
152. 13 1.0 3 1.0 1 1.0 6 1.0 5 1.0
153. LOAD COMB 403 COMBINATION LOAD CASE
154. 14 1.0 3 1.0 1 1.0 6 1.0 5 1.0
155. LOAD COMB 404 COMBINATION LOAD CASE
156. 15 1.0 3 1.0 1 1.0 6 1.0 5 1.0
157. LOAD COMB 405 COMBINATION LOAD CASE
158. 16 1.0 3 1.0 1 1.0 6 1.0 5 1.0
159. LOAD COMB 406 COMBINATION LOAD CASE
160. 17 1.0 3 1.0 1 1.0 6 1.0 5 1.0
161. LOAD COMB 407 COMBINATION LOAD CASE
162. 18 1.0 3 1.0 1 1.0 6 1.0 5 1.0
163. LOAD COMB 408 COMBINATION LOAD CASE
164. 19 1.0 3 1.0 1 1.0 6 1.0 5 1.0
165. LOAD COMB 409 COMBINATION LOAD CASE
166. 20 1.0 3 1.0 1 1.0 6 1.0 5 1.0
167. LOAD COMB 410 COMBINATION LOAD CASE
168. 21 1.0 3 1.0 1 1.0 6 1.0 5 1.0
169. LOAD COMB 411 COMBINATION LOAD CASE
170. 22 1.0 3 1.0 1 1.0 6 1.0 5 1.0
171. ***
172. LOAD COMB 500 COMBINATION LOAD CASE -CHECK SUPPORT DISPL.
173. 11 1.0 6 1.0 1 1.0
174. LOAD COMB 501 COMBINATION LOAD CASE
175. 12 1.0 6 1.0 1 1.0
176. LOAD COMB 502 COMBINATION LOAD CASE
177. 13 1.0 6 1.0 1 1.0
178. LOAD COMB 503 COMBINATION LOAD CASE
179. 14 1.0 6 1.0 1 1.0
180. LOAD COMB 504 COMBINATION LOAD CASE
181. 15 1.0 6 1.0 1 1.0
182. LOAD COMB 505 COMBINATION LOAD CASE
183. 16 1.0 6 1.0 1 1.0
184. LOAD COMB 506 COMBINATION LOAD CASE
```

```
185. 17 1.0 6 1.0 1 1.0
186. LOAD COMB 507 COMBINATION LOAD CASE
187. 18 1.0 6 1.0 1 1.0
188. LOAD COMB 508 COMBINATION LOAD CASE
189. 19 1.0 6 1.0 1 1.0
190. LOAD COMB 509 COMBINATION LOAD CASE
191. 20 1.0 6 1.0 1 1.0
192. LOAD COMB 510 COMBINATION LOAD CASE
193. 21 1.0 6 1.0 1 1.0
194. LOAD COMB 511 COMBINATION LOAD CASE
195. 22 1.0 6 1.0 1 1.0
196. ***
197. LOAD COMB 600 COMBINATION LOAD CASE -CHECK DEFLEC.
198. 11 1.0 6 1.0 3 1.0
199. LOAD COMB 601 COMBINATION LOAD CASE
200. 12 1.0 6 1.0 3 1.0
201. LOAD COMB 602 COMBINATION LOAD CASE
202. 13 1.0 6 1.0 3 1.0
203. LOAD COMB 603 COMBINATION LOAD CASE
204. 14 1.0 6 1.0 3 1.0
205. LOAD COMB 604 COMBINATION LOAD CASE
206. 15 1.0 6 1.0 3 1.0
207. LOAD COMB 605 COMBINATION LOAD CASE
208. 16 1.0 6 1.0 3 1.0
209. LOAD COMB 606 COMBINATION LOAD CASE
210. 17 1.0 6 1.0 3 1.0
211. LOAD COMB 607 COMBINATION LOAD CASE
212. 18 1.0 6 1.0 3 1.0
213. LOAD COMB 608 COMBINATION LOAD CASE
214. 19 1.0 6 1.0 3 1.0
215. LOAD COMB 609 COMBINATION LOAD CASE
216. 20 1.0 6 1.0 3 1.0
217. LOAD COMB 610 COMBINATION LOAD CASE
218. 21 1.0 6 1.0 3 1.0
219. LOAD COMB 611 COMBINATION LOAD CASE
220. 22 1.0 6 1.0 3 1.0
221. LOAD COMB 700 COMBINATION LOAD CASE -LL1
222. 11 1.0 6 1.0
223. LOAD COMB 701 COMBINATION LOAD CASE
224. 12 1.0 6 1.0
225. LOAD COMB 702 COMBINATION LOAD CASE
226. 13 1.0 6 1.0
227. LOAD COMB 703 COMBINATION LOAD CASE
228. 14 1.0 6 1.0
229. LOAD COMB 704 COMBINATION LOAD CASE
230. 15 1.0 6 1.0
231. LOAD COMB 705 COMBINATION LOAD CASE
232. 16 1.0 6 1.0
233. LOAD COMB 706 COMBINATION LOAD CASE
234. 17 1.0 6 1.0
235. LOAD COMB 707 COMBINATION LOAD CASE
236. 18 1.0 6 1.0
237. LOAD COMB 708 COMBINATION LOAD CASE
238. 19 1.0 6 1.0
239. LOAD COMB 709 COMBINATION LOAD CASE
240. 20 1.0 6 1.0
```

```
241. LOAD COMB 710 COMBINATION LOAD CASE
242. 21 1.0 6 1.0
243. LOAD COMB 711 COMBINATION LOAD CASE
244. 22 1.0 6 1.0
245. ***
246. LOAD COMB 800 COMBINATION LOAD CASE -DL
247. 1 1.0 2 1.0 4 1.0
248. ***
249. ***TANDEM
250. LOAD COMB 1000 COMBINATION LOAD CASE -MAX MOMENT OUTSIDE
251. 31 1.75 6 1.75 1 1.35 2 1.35 4 1.75
252. LOAD COMB 1001 COMBINATION LOAD CASE
253. 32 1.75 6 1.75 1 1.35 2 1.35 4 1.75
254. LOAD COMB 1002 COMBINATION LOAD CASE
255. 33 1.75 6 1.75 1 1.35 2 1.35 4 1.75
256. LOAD COMB 1003 COMBINATION LOAD CASE
257. 34 1.75 6 1.75 1 1.35 2 1.35 4 1.75
258. LOAD COMB 1004 COMBINATION LOAD CASE
259. 35 1.75 6 1.75 1 1.35 2 1.35 4 1.75
260. LOAD COMB 1005 COMBINATION LOAD CASE
261. 36 1.75 6 1.75 1 1.35 2 1.35 4 1.75
262. LOAD COMB 1006 COMBINATION LOAD CASE
263. 37 1.75 6 1.75 1 1.35 2 1.35 4 1.75
264. LOAD COMB 1007 COMBINATION LOAD CASE
265. 38 1.75 6 1.75 1 1.35 2 1.35 4 1.75
266. LOAD COMB 1008 COMBINATION LOAD CASE
267. 39 1.75 6 1.75 1 1.35 2 1.35 4 1.75
268. LOAD COMB 2001 COMBINATION LOAD CASE
269. 32 1.75 6 1.75 1 1.35 2 0.5 5 1.0
270. LOAD COMB 2002 COMBINATION LOAD CASE
271. 33 1.75 6 1.75 1 1.35 2 0.5 5 1.0
272. LOAD COMB 2003 COMBINATION LOAD CASE
273. 34 1.75 6 1.75 1 1.35 2 0.5 5 1.0
274. LOAD COMB 2004 COMBINATION LOAD CASE
275. 35 1.75 6 1.75 1 1.35 2 0.5 5 1.0
276. LOAD COMB 2005 COMBINATION LOAD CASE
277. 36 1.75 6 1.75 1 1.35 2 0.5 5 1.0
278. LOAD COMB 2006 COMBINATION LOAD CASE
279. 37 1.75 6 1.75 1 1.35 2 0.5 5 1.0
280. LOAD COMB 2007 COMBINATION LOAD CASE
281. 38 1.75 6 1.75 1 1.35 2 0.5 5 1.0
282. LOAD COMB 2008 COMBINATION LOAD CASE
283. 39 1.75 6 1.75 1 1.35 2 0.5 5 1.0
284. LOAD COMB 3000 COMBINATION LOAD CASE -CRACK CONTROL-MAX OUTSIDE
285. 31 1.0 6 1.0 1 1.0 2 1.0 4 1.0
286. LOAD COMB 3001 COMBINATION LOAD CASE
287. 32 1.0 6 1.0 1 1.0 2 1.0 4 1.0
288. LOAD COMB 3002 COMBINATION LOAD CASE
289. 33 1.0 6 1.0 1 1.0 2 1.0 4 1.0
290. LOAD COMB 3003 COMBINATION LOAD CASE
291. 34 1.0 6 1.0 1 1.0 2 1.0 4 1.0
292. LOAD COMB 3004 COMBINATION LOAD CASE
293. 35 1.0 6 1.0 1 1.0 2 1.0 4 1.0
294. LOAD COMB 3005 COMBINATION LOAD CASE
295. 36 1.0 6 1.0 1 1.0 2 1.0 4 1.0
296. LOAD COMB 3006 COMBINATION LOAD CASE
```

```
297. 37 1.0 6 1.0 1 1.0 2 1.0 4 1.0
298. LOAD COMB 3007 COMBINATION LOAD CASE
299. 38 1.0 6 1.0 1 1.0 2 1.0 4 1.0
300. LOAD COMB 3008 COMBINATION LOAD CASE
301. 39 1.0 6 1.0 1 1.0 2 1.0 4 1.0
302. LOAD COMB 4000 COMBINATION LOAD CASE -CRACK CONTROL-MAX INSIDE
303. 31 1.0 3 1.0 1 1.0 6 1.0 5 1.0
304. LOAD COMB 4001 COMBINATION LOAD CASE
305. 32 1.0 3 1.0 1 1.0 6 1.0 5 1.0
306. LOAD COMB 4002 COMBINATION LOAD CASE
307. 33 1.0 3 1.0 1 1.0 6 1.0 5 1.0
308. LOAD COMB 4003 COMBINATION LOAD CASE
309. 34 1.0 3 1.0 1 1.0 6 1.0 5 1.0
310. LOAD COMB 4004 COMBINATION LOAD CASE
311. 35 1.0 3 1.0 1 1.0 6 1.0 5 1.0
312. LOAD COMB 4005 COMBINATION LOAD CASE
313. 36 1.0 3 1.0 1 1.0 6 1.0 5 1.0
314. LOAD COMB 4006 COMBINATION LOAD CASE
315. 37 1.0 3 1.0 1 1.0 6 1.0 5 1.0
316. LOAD COMB 4007 COMBINATION LOAD CASE
317. 38 1.0 3 1.0 1 1.0 6 1.0 5 1.0
318. LOAD COMB 4008 COMBINATION LOAD CASE
319. 39 1.0 3 1.0 1 1.0 6 1.0 5 1.0
320. LOAD COMB 5000 COMBINATION LOAD CASE -CHECK SUPPORT DISPL.
321. 31 1.0 6 1.0 1 1.0
322. LOAD COMB 5001 COMBINATION LOAD CASE
323. 32 1.0 6 1.0 1 1.0
324. LOAD COMB 5002 COMBINATION LOAD CASE
325. 33 1.0 6 1.0 1 1.0
326. LOAD COMB 5003 COMBINATION LOAD CASE
327. 34 1.0 6 1.0 1 1.0
328. LOAD COMB 5004 COMBINATION LOAD CASE
329. 35 1.0 6 1.0 1 1.0
330. LOAD COMB 5005 COMBINATION LOAD CASE
331. 36 1.0 6 1.0 1 1.0
332. LOAD COMB 5006 COMBINATION LOAD CASE
333. 37 1.0 6 1.0 1 1.0
334. LOAD COMB 5007 COMBINATION LOAD CASE
335. 38 1.0 6 1.0 1 1.0
336. LOAD COMB 5008 COMBINATION LOAD CASE
337. 39 1.0 6 1.0 1 1.0
338. LOAD COMB 6000 COMBINATION LOAD CASE -CHECK DEFLEC.
339. 31 1.0 6 1.0 3 1.0
340. LOAD COMB 6001 COMBINATION LOAD CASE
341. 32 1.0 6 1.0 3 1.0
342. LOAD COMB 6002 COMBINATION LOAD CASE
343. 33 1.0 6 1.0 3 1.0
344. LOAD COMB 6003 COMBINATION LOAD CASE
345. 34 1.0 6 1.0 3 1.0
346. LOAD COMB 6004 COMBINATION LOAD CASE
347. 35 1.0 6 1.0 3 1.0
348. LOAD COMB 6005 COMBINATION LOAD CASE
349. 36 1.0 6 1.0 3 1.0
350. LOAD COMB 6006 COMBINATION LOAD CASE
351. 37 1.0 6 1.0 3 1.0
352. LOAD COMB 6007 COMBINATION LOAD CASE
```

```
353. 38 1.0 6 1.0 3 1.0
354. LOAD COMB 6008 COMBINATION LOAD CASE
355. 39 1.0 6 1.0 3 1.0
356. ***
357. LOAD COMB 7000 COMBINATION LOAD CASE -LL2
358. 31 1.0 6 1.0
359. LOAD COMB 7001 COMBINATION LOAD CASE
360. 32 1.0 6 1.0
361. LOAD COMB 7002 COMBINATION LOAD CASE
362. 33 1.0 6 1.0
363. LOAD COMB 7003 COMBINATION LOAD CASE
364. 34 1.0 6 1.0
365. LOAD COMB 7004 COMBINATION LOAD CASE
366. 35 1.0 6 1.0
367. LOAD COMB 7005 COMBINATION LOAD CASE
368. 36 1.0 6 1.0
369. LOAD COMB 7006 COMBINATION LOAD CASE
370. 37 1.0 6 1.0
371. LOAD COMB 7007 COMBINATION LOAD CASE
372. 38 1.0 6 1.0
373. LOAD COMB 7008 COMBINATION LOAD CASE
374. 39 1.0 6 1.0
375. ***
376. PERFORM ANALYSIS


        P R O B L E M   S T A T I S T I C S
        -----------------------------------

  NUMBER OF JOINTS          5  NUMBER OF MEMBERS       4
  NUMBER OF PLATES          0  NUMBER OF SOLIDS        0
  NUMBER OF SURFACES        0  NUMBER OF SUPPORTS      2


       SOLVER USED IS THE OUT-OF-CORE BASIC SOLVER

  ORIGINAL/FINAL BAND-WIDTH=     3/     3/     20 DOF
TOTAL      PRIMARY LOAD CASES =    29, TOTAL DEGREES OF FREEDOM =      21
TOTAL LOAD COMBINATION  CASES =   147  SO FAR.
  SIZE OF STIFFNESS MATRIX =        1 DOUBLE  KILO-WORDS
  REQRD/AVAIL. DISK SPACE  =     12.0/      0.0 MB


377. LOAD LIST 1 TO 6 11 TO 22 31 TO 39
378. PRINT SUPPORT REACTION ALL
```

SUPPORT REACTIONS -UNIT KIP FEET STRUCTURE TYPE = SPACE

JOINT	LOAD	FORCE-X	FORCE-Y	FORCE-Z	MOM-X	MOM-Y	MOM Z
1	1	0.83	5.22	0.00	0.00	0.00	0.00
	2	-2.66	0.00	0.00	0.00	0.00	0.00
	3	-1.33	0.00	0.00	0.00	0.00	0.00
	4	-0.87	0.00	0.00	0.00	0.00	0.00
	5	1.76	0.00	0.00	0.00	0.00	0.00
	6	0.17	0.83	0.00	0.00	0.00	0.00
	11	0.04	4.45	0.00	0.00	0.00	0.00
	12	0.23	4.11	0.00	0.00	0.00	0.00
	13	0.38	3.78	0.00	0.00	0.00	0.00
	14	0.50	3.44	0.00	0.00	0.00	0.00
	15	0.59	3.10	0.00	0.00	0.00	0.00
	16	0.66	2.77	0.00	0.00	0.00	0.00
	17	0.69	2.43	0.00	0.00	0.00	0.00
	18	0.73	6.68	0.00	0.00	0.00	0.00
	19	0.90	6.01	0.00	0.00	0.00	0.00
	20	1.00	5.34	0.00	0.00	0.00	0.00
	21	1.05	4.66	0.00	0.00	0.00	0.00
	22	1.03	3.99	0.00	0.00	0.00	0.00
	31	0.03	3.48	0.00	0.00	0.00	0.00
	32	0.18	3.21	0.00	0.00	0.00	0.00
	33	0.33	6.43	0.00	0.00	0.00	0.00
	34	0.57	5.90	0.00	0.00	0.00	0.00
	35	0.76	5.38	0.00	0.00	0.00	0.00
	36	0.90	4.85	0.00	0.00	0.00	0.00
	37	1.00	4.32	0.00	0.00	0.00	0.00
	38	1.05	3.90	0.00	0.00	0.00	0.00
	39	1.06	3.38	0.00	0.00	0.00	0.00
2	1	-0.83	5.22	0.00	0.00	0.00	0.00
	2	2.66	0.00	0.00	0.00	0.00	0.00
	3	1.33	0.00	0.00	0.00	0.00	0.00
	4	0.87	0.00	0.00	0.00	0.00	0.00
	5	-1.76	0.00	0.00	0.00	0.00	0.00
	6	-0.17	0.83	0.00	0.00	0.00	0.00
	11	-0.04	0.07	0.00	0.00	0.00	0.00
	12	-0.23	0.41	0.00	0.00	0.00	0.00
	13	-0.38	0.74	0.00	0.00	0.00	0.00
	14	-0.50	1.08	0.00	0.00	0.00	0.00
	15	-0.59	1.42	0.00	0.00	0.00	0.00
	16	-0.66	1.76	0.00	0.00	0.00	0.00
	17	-0.69	2.09	0.00	0.00	0.00	0.00
	18	-0.73	2.36	0.00	0.00	0.00	0.00
	19	-0.90	3.03	0.00	0.00	0.00	0.00
	20	-1.00	3.71	0.00	0.00	0.00	0.00
	21	-1.05	4.38	0.00	0.00	0.00	0.00
	22	-1.03	5.06	0.00	0.00	0.00	0.00
	31	-0.03	0.05	0.00	0.00	0.00	0.00

SUPPORT REACTIONS -UNIT KIP FEET STRUCTURE TYPE = SPACE

JOINT	LOAD	FORCE-X	FORCE-Y	FORCE-Z	MOM-X	MOM-Y	MOM Z
	32	-0.18	0.32	0.00	0.00	0.00	0.00
	33	-0.33	0.64	0.00	0.00	0.00	0.00
	34	-0.57	1.16	0.00	0.00	0.00	0.00
	35	-0.76	1.69	0.00	0.00	0.00	0.00
	36	-0.90	2.22	0.00	0.00	0.00	0.00
	37	-1.00	2.74	0.00	0.00	0.00	0.00
	38	-1.05	3.16	0.00	0.00	0.00	0.00
	39	-1.06	3.69	0.00	0.00	0.00	0.00

********** END OF LATEST ANALYSIS RESULT **********

379. PRINT FORCE ENVELOPE NSECTION 2 ALL

MEMBER FORCE ENVELOPE

ALL UNITS ARE KIP FEET

MEMB	DISTANCE		FY	LD	MZ	LD	FZ	LD	MY	LD
1	0.00	MAX	2.66	2	0.00	39	0.00	39	0.00	39
		MIN	-1.76	5	0.00	39	0.00	39	0.00	39
	0.83	MAX	1.96	2	1.26	5	0.00	39	0.00	39
		MIN	-1.27	5	-1.92	2	0.00	39	0.00	39
	1.67	MAX	1.31	2	2.12	5	0.00	39	0.00	39
		MIN	-1.06	39	-3.28	2	0.00	39	0.00	39
	2.50	MAX	0.72	2	2.65	39	0.00	39	0.00	39
		MIN	-1.06	39	-4.13	2	0.00	39	0.00	39
	3.33	MAX	0.17	4	3.53	39	0.00	39	0.00	39
		MIN	-1.06	39	-4.49	2	0.00	39	0.00	39
	4.17	MAX	0.29	5	4.42	39	0.00	39	0.00	39
		MIN	-1.06	39	-4.42	2	0.00	39	0.00	39
	5.00	MAX	0.58	5	5.30	39	0.00	39	0.00	39
		MIN	-1.06	39	-3.95	2	0.00	39	0.00	39
	5.83	MAX	0.81	5	6.18	39	0.00	39	0.00	39
		MIN	-1.19	2	-3.13	2	0.00	39	0.00	39
	6.67	MAX	1.01	5	7.07	39	0.00	39	0.00	39
		MIN	-1.54	2	-1.99	2	0.00	39	0.00	39
	7.50	MAX	1.16	5	7.95	39	0.00	39	0.00	39
		MIN	-1.85	2	-0.63	4	0.00	39	0.00	39
	8.33	MAX	1.27	5	8.84	39	0.00	39	0.00	39
		MIN	-2.11	2	-0.95	5	0.00	39	0.00	39
	9.17	MAX	1.33	5	9.72	39	0.00	39	0.00	39
		MIN	-2.31	2	-2.03	5	0.00	39	0.00	39
	10.00	MAX	1.36	5	10.60	39	0.00	39	0.00	39
		MIN	-2.47	2	-3.16	5	0.00	39	0.00	39

MAX/MIN FORCE VALUES FOR MEMB 1, AMONGST ALL SECT LOCATIONS

	FY/ FZ	DIST DIST	LD LD	MZ/ MY	DIST DIST	LD LD	FX	DIST	LD
MAX.	2.66	0.00	2	10.60	10.00	39			
	0.00	0.00	1	0.00	0.00	1	6.68 C	0.00	18
MIN.	-2.47	10.00	2	-4.49	3.33	2			
	0.00	10.00	39	0.00	10.00	39	0.00	10.00	5

2	0.00	MAX	1.76	5	0.00	39	0.00	39	0.00	39
		MIN	-2.66	2	0.00	39	0.00	39	0.00	39
	0.83	MAX	1.27	5	1.92	2	0.00	39	0.00	39
		MIN	-1.96	2	-1.26	5	0.00	39	0.00	39

1.67	MAX	1.06	39	3.28	2	0.00	39	0.00	39
	MIN	-1.31	2	-2.12	5	0.00	39	0.00	39
2.50	MAX	1.06	39	4.13	2	0.00	39	0.00	39
	MIN	-0.72	2	-2.65	39	0.00	39	0.00	39
3.33	MAX	1.06	39	4.49	2	0.00	39	0.00	39
	MIN	-0.17	4	-3.53	39	0.00	39	0.00	39
4.17	MAX	1.06	39	4.42	2	0.00	39	0.00	39
	MIN	-0.29	5	-4.42	39	0.00	39	0.00	39
5.00	MAX	1.06	39	3.95	2	0.00	39	0.00	39
	MIN	-0.58	5	-5.30	39	0.00	39	0.00	39
5.83	MAX	1.19	2	3.13	2	0.00	39	0.00	39
	MIN	-0.81	5	-6.18	39	0.00	39	0.00	39
6.67	MAX	1.54	2	1.99	2	0.00	39	0.00	39
	MIN	-1.01	5	-7.07	39	0.00	39	0.00	39
7.50	MAX	1.85	2	0.63	4	0.00	39	0.00	39
	MIN	-1.16	5	-7.95	39	0.00	39	0.00	39
8.33	MAX	2.11	2	0.95	5	0.00	39	0.00	39
	MIN	-1.27	5	-8.84	39	0.00	39	0.00	39
9.17	MAX	2.31	2	2.03	5	0.00	39	0.00	39
	MIN	-1.33	5	-9.72	39	0.00	39	0.00	39
10.00	MAX	2.47	2	3.16	5	0.00	39	0.00	39
	MIN	-1.36	5	-10.60	39	0.00	39	0.00	39

MAX/MIN FORCE VALUES FOR MEMB 2, AMONGST ALL SECT LOCATIONS

	FY/ FZ	DIST DIST	LD LD	MZ/ MY	DIST DIST	LD LD	FX	DIST	LD
MAX.	2.47	10.00	2	4.49	3.33	2			
	0.00	0.00	1	0.00	0.00	1	5.22 C	0.00	1
MIN.	-2.66	0.00	2	-10.60	10.00	39			
	0.00	10.00	39	0.00	10.00	39	0.00	10.00	5

3	0.00	MAX	6.68	18	9.91	39	0.00	39	0.00	39
		MIN	0.00	5	-4.06	5	0.00	39	0.00	39
	1.08	MAX	6.01	19	6.57	2	0.00	39	0.00	39
		MIN	-0.07	11	-4.06	5	0.00	39	0.00	39
	2.17	MAX	5.38	35	6.57	2	0.00	39	0.00	39
		MIN	-0.41	12	-8.59	34	0.00	39	0.00	39
	3.25	MAX	5.38	35	6.57	2	0.00	39	0.00	39
		MIN	-0.41	12	-11.60	35	0.00	39	0.00	39
	4.33	MAX	4.85	36	6.57	2	0.00	39	0.00	39
		MIN	-0.74	13	-16.24	35	0.00	39	0.00	39
	5.42	MAX	4.85	36	6.57	2	0.00	39	0.00	39
		MIN	-0.74	13	-18.64	36	0.00	39	0.00	39
	6.50	MAX	4.32	37	6.57	2	0.00	39	0.00	39
		MIN	-1.16	34	-22.12	36	0.00	39	0.00	39
	7.58	MAX	4.32	37	6.57	2	0.00	39	0.00	39
		MIN	-1.16	34	-23.91	37	0.00	39	0.00	39
	8.67	MAX	3.90	38	6.57	2	0.00	39	0.00	39
		MIN	-1.69	35	-26.23	37	0.00	39	0.00	39
	9.75	MAX	3.90	38	6.57	2	0.00	39	0.00	39
		MIN	-1.69	35	-28.49	38	0.00	39	0.00	39

10.83	MAX	3.38	39	6.57	2	0.00	39	0.00	39
	MIN	-2.22	36	-29.77	38	0.00	39	0.00	39
11.92	MAX	3.38	39	6.57	2	0.00	39	0.00	39
	MIN	-2.22	36	-30.35	39	0.00	39	0.00	39
13.00	MAX	2.16	18	6.57	2	0.00	39	0.00	39
	MIN	-2.74	37	-30.58	38	0.00	39	0.00	39

MAX/MIN FORCE VALUES FOR MEMB 3, AMONGST ALL SECT LOCATIONS

	FY/ FZ	DIST DIST	LD LD	MZ/ MY	DIST DIST	LD LD	FX	DIST	LD
MAX.	6.68	0.00	18	9.91	0.00	39			
	0.00	0.00	1	0.00	0.00	1	2.47 C	0.00	2
MIN.	-2.74	13.00	37	-30.58	13.00	38			
	0.00	13.00	39	0.00	13.00	39	1.36 T	13.00	5

4	0.00	MAX	5.06	22	9.89	38	0.00	39	0.00	39
		MIN	0.00	5	-4.06	5	0.00	39	0.00	39
	1.08	MAX	5.06	22	6.57	2	0.00	39	0.00	39
		MIN	0.00	5	-4.06	5	0.00	39	0.00	39
	2.17	MAX	5.06	22	6.57	2	0.00	39	0.00	39
		MIN	0.00	5	-4.06	5	0.00	39	0.00	39
	3.25	MAX	5.06	22	6.57	2	0.00	39	0.00	39
		MIN	0.00	5	-7.57	22	0.00	39	0.00	39
	4.33	MAX	5.06	22	6.57	2	0.00	39	0.00	39
		MIN	0.00	5	-13.05	22	0.00	39	0.00	39
	5.42	MAX	4.38	21	6.57	2	0.00	39	0.00	39
		MIN	0.00	5	-15.88	22	0.00	39	0.00	39
	6.50	MAX	4.38	21	6.57	2	0.00	39	0.00	39
		MIN	0.00	5	-19.15	21	0.00	39	0.00	39
	7.58	MAX	3.71	20	6.57	2	0.00	39	0.00	39
		MIN	-0.14	21	-20.49	21	0.00	39	0.00	39
	8.67	MAX	3.71	20	6.57	2	0.00	39	0.00	39
		MIN	-0.14	21	-22.99	20	0.00	39	0.00	39
	9.75	MAX	3.69	39	6.57	2	0.00	39	0.00	39
		MIN	-0.81	20	-26.16	39	0.00	39	0.00	39
	10.83	MAX	3.16	38	6.57	2	0.00	39	0.00	39
		MIN	-1.49	19	-30.14	39	0.00	39	0.00	39
	11.92	MAX	3.16	38	6.57	2	0.00	39	0.00	39
		MIN	-1.49	19	-30.31	39	0.00	39	0.00	39
	13.00	MAX	2.74	37	6.57	2	0.00	39	0.00	39
		MIN	-2.16	18	-30.58	38	0.00	39	0.00	39

MAX/MIN FORCE VALUES FOR MEMB 4, AMONGST ALL SECT LOCATIONS

	FY/ FZ	DIST DIST	LD LD	MZ/ MY	DIST DIST	LD LD	FX	DIST	LD

MAX.	5.06	0.00	22	9.89	0.00	38			
	0.00	0.00	1	0.00	0.00	1	2.47 C	0.00	2
MIN.	-2.16	13.00	18	-30.58	13.00	38			
	0.00	13.00	39	0.00	13.00	39	1.36 T	13.00	5

********** END OF FORCE ENVELOPE FROM INTERNAL STORAGE **********

380. LOAD LIST 300 TO 311 400 TO 411 3000 TO 3008 4000 TO 4008
381. PRINT SUPPORT REACTION ALL

SUPPORT REACTIONS -UNIT KIP FEET STRUCTURE TYPE = SPACE

JOINT	LOAD	FORCE-X	FORCE-Y	FORCE-Z	MOM-X	MOM-Y	MOM Z
1	300	-2.48	10.50	0.00	0.00	0.00	0.00
	301	-2.30	10.16	0.00	0.00	0.00	0.00
	302	-2.14	9.83	0.00	0.00	0.00	0.00
	303	-2.02	9.49	0.00	0.00	0.00	0.00
	304	-1.93	9.15	0.00	0.00	0.00	0.00
	305	-1.87	8.82	0.00	0.00	0.00	0.00
	306	-1.84	8.48	0.00	0.00	0.00	0.00
	307	-1.79	12.73	0.00	0.00	0.00	0.00
	308	-1.62	12.06	0.00	0.00	0.00	0.00
	309	-1.52	11.38	0.00	0.00	0.00	0.00
	310	-1.48	10.71	0.00	0.00	0.00	0.00
	311	-1.49	10.04	0.00	0.00	0.00	0.00
	400	1.48	10.50	0.00	0.00	0.00	0.00
	401	1.67	10.16	0.00	0.00	0.00	0.00
	402	1.82	9.83	0.00	0.00	0.00	0.00
	403	1.94	9.49	0.00	0.00	0.00	0.00
	404	2.03	9.15	0.00	0.00	0.00	0.00
	405	2.10	8.82	0.00	0.00	0.00	0.00
	406	2.13	8.48	0.00	0.00	0.00	0.00
	407	2.17	12.73	0.00	0.00	0.00	0.00
	408	2.34	12.06	0.00	0.00	0.00	0.00
	409	2.44	11.38	0.00	0.00	0.00	0.00
	410	2.49	10.71	0.00	0.00	0.00	0.00
	411	2.47	10.04	0.00	0.00	0.00	0.00
	3000	-2.49	9.53	0.00	0.00	0.00	0.00
	3001	-2.35	9.26	0.00	0.00	0.00	0.00
	3002	-2.19	12.48	0.00	0.00	0.00	0.00
	3003	-1.95	11.95	0.00	0.00	0.00	0.00
	3004	-1.76	11.42	0.00	0.00	0.00	0.00
	3005	-1.62	10.90	0.00	0.00	0.00	0.00
	3006	-1.52	10.37	0.00	0.00	0.00	0.00
	3007	-1.47	9.95	0.00	0.00	0.00	0.00
	3008	-1.46	9.43	0.00	0.00	0.00	0.00
	4000	1.47	9.53	0.00	0.00	0.00	0.00
	4001	1.62	9.26	0.00	0.00	0.00	0.00
	4002	1.77	12.48	0.00	0.00	0.00	0.00
	4003	2.01	11.95	0.00	0.00	0.00	0.00
	4004	2.20	11.42	0.00	0.00	0.00	0.00
	4005	2.34	10.90	0.00	0.00	0.00	0.00
	4006	2.44	10.37	0.00	0.00	0.00	0.00
	4007	2.49	9.95	0.00	0.00	0.00	0.00
	4008	2.50	9.43	0.00	0.00	0.00	0.00
2	300	2.48	6.12	0.00	0.00	0.00	0.00
	301	2.30	6.46	0.00	0.00	0.00	0.00
	302	2.14	6.79	0.00	0.00	0.00	0.00
	303	2.02	7.13	0.00	0.00	0.00	0.00

SUPPORT REACTIONS -UNIT KIP FEET STRUCTURE TYPE = SPACE

JOINT	LOAD	FORCE-X	FORCE-Y	FORCE-Z	MOM-X	MOM-Y	MOM Z
	304	1.93	7.47	0.00	0.00	0.00	0.00
	305	1.87	7.80	0.00	0.00	0.00	0.00
	306	1.84	8.14	0.00	0.00	0.00	0.00
	307	1.79	8.41	0.00	0.00	0.00	0.00
	308	1.62	9.08	0.00	0.00	0.00	0.00
	309	1.52	9.76	0.00	0.00	0.00	0.00
	310	1.48	10.43	0.00	0.00	0.00	0.00
	311	1.49	11.10	0.00	0.00	0.00	0.00
	400	-1.48	6.12	0.00	0.00	0.00	0.00
	401	-1.67	6.46	0.00	0.00	0.00	0.00
	402	-1.82	6.79	0.00	0.00	0.00	0.00
	403	-1.94	7.13	0.00	0.00	0.00	0.00
	404	-2.03	7.47	0.00	0.00	0.00	0.00
	405	-2.10	7.80	0.00	0.00	0.00	0.00
	406	-2.13	8.14	0.00	0.00	0.00	0.00
	407	-2.17	8.41	0.00	0.00	0.00	0.00
	408	-2.34	9.08	0.00	0.00	0.00	0.00
	409	-2.44	9.76	0.00	0.00	0.00	0.00
	410	-2.49	10.43	0.00	0.00	0.00	0.00
	411	-2.47	11.10	0.00	0.00	0.00	0.00
	3000	2.49	6.10	0.00	0.00	0.00	0.00
	3001	2.35	6.37	0.00	0.00	0.00	0.00
	3002	2.19	6.68	0.00	0.00	0.00	0.00
	3003	1.95	7.21	0.00	0.00	0.00	0.00
	3004	1.76	7.74	0.00	0.00	0.00	0.00
	3005	1.62	8.26	0.00	0.00	0.00	0.00
	3006	1.52	8.79	0.00	0.00	0.00	0.00
	3007	1.47	9.21	0.00	0.00	0.00	0.00
	3008	1.46	9.73	0.00	0.00	0.00	0.00
	4000	-1.47	6.10	0.00	0.00	0.00	0.00
	4001	-1.62	6.37	0.00	0.00	0.00	0.00
	4002	-1.77	6.68	0.00	0.00	0.00	0.00
	4003	-2.01	7.21	0.00	0.00	0.00	0.00
	4004	-2.20	7.74	0.00	0.00	0.00	0.00
	4005	-2.34	8.26	0.00	0.00	0.00	0.00
	4006	-2.44	8.79	0.00	0.00	0.00	0.00
	4007	-2.49	9.21	0.00	0.00	0.00	0.00
	4008	-2.50	9.73	0.00	0.00	0.00	0.00

********** END OF LATEST ANALYSIS RESULT **********

```
382. ***LL
383. LOAD LIST 700 TO 711 7000 TO 7008
384. PRINT SUPPORT REACTION ALL
```

SUPPORT REACTIONS -UNIT KIP FEET STRUCTURE TYPE = SPACE

JOINT	LOAD	FORCE-X	FORCE-Y	FORCE-Z	MOM-X	MOM-Y	MOM Z
1	700	0.22	5.28	0.00	0.00	0.00	0.00
	701	0.40	4.95	0.00	0.00	0.00	0.00
	702	0.55	4.61	0.00	0.00	0.00	0.00
	703	0.68	4.27	0.00	0.00	0.00	0.00
	704	0.77	3.94	0.00	0.00	0.00	0.00
	705	0.83	3.60	0.00	0.00	0.00	0.00
	706	0.86	3.26	0.00	0.00	0.00	0.00
	707	0.91	7.52	0.00	0.00	0.00	0.00
	708	1.07	6.84	0.00	0.00	0.00	0.00
	709	1.18	6.17	0.00	0.00	0.00	0.00
	710	1.22	5.49	0.00	0.00	0.00	0.00
	711	1.20	4.82	0.00	0.00	0.00	0.00
	7000	0.21	4.31	0.00	0.00	0.00	0.00
	7001	0.35	4.05	0.00	0.00	0.00	0.00
	7002	0.50	7.26	0.00	0.00	0.00	0.00
	7003	0.74	6.73	0.00	0.00	0.00	0.00
	7004	0.93	6.21	0.00	0.00	0.00	0.00
	7005	1.08	5.68	0.00	0.00	0.00	0.00
	7006	1.17	5.15	0.00	0.00	0.00	0.00
	7007	1.22	4.74	0.00	0.00	0.00	0.00
	7008	1.23	4.21	0.00	0.00	0.00	0.00
2	700	-0.22	0.90	0.00	0.00	0.00	0.00
	701	-0.40	1.24	0.00	0.00	0.00	0.00
	702	-0.55	1.58	0.00	0.00	0.00	0.00
	703	-0.68	1.91	0.00	0.00	0.00	0.00
	704	-0.77	2.25	0.00	0.00	0.00	0.00
	705	-0.83	2.59	0.00	0.00	0.00	0.00
	706	-0.86	2.92	0.00	0.00	0.00	0.00
	707	-0.91	3.19	0.00	0.00	0.00	0.00
	708	-1.07	3.87	0.00	0.00	0.00	0.00
	709	-1.18	4.54	0.00	0.00	0.00	0.00
	710	-1.22	5.21	0.00	0.00	0.00	0.00
	711	-1.20	5.89	0.00	0.00	0.00	0.00
	7000	-0.21	0.89	0.00	0.00	0.00	0.00
	7001	-0.35	1.15	0.00	0.00	0.00	0.00
	7002	-0.50	1.47	0.00	0.00	0.00	0.00
	7003	-0.74	1.99	0.00	0.00	0.00	0.00
	7004	-0.93	2.52	0.00	0.00	0.00	0.00
	7005	-1.08	3.05	0.00	0.00	0.00	0.00
	7006	-1.17	3.57	0.00	0.00	0.00	0.00
	7007	-1.22	3.99	0.00	0.00	0.00	0.00
	7008	-1.23	4.52	0.00	0.00	0.00	0.00

********** END OF LATEST ANALYSIS RESULT **********

```
385. ***DL
386. LOAD LIST 800
387. PRINT SUPPORT REACTION ALL
```

SUPPORT REACTIONS -UNIT KIP FEET STRUCTURE TYPE = SPACE

JOINT	LOAD	FORCE-X	FORCE-Y	FORCE-Z	MOM-X	MOM-Y	MOM Z
1	800	-2.70	5.22	0.00	0.00	0.00	0.00
2	800	2.70	5.22	0.00	0.00	0.00	0.00

********** END OF LATEST ANALYSIS RESULT **********

```
388. *** BEAM DISPLACEMENTS AT CL FROM 1.0LL
389. LOAD LIST 600 TO 611 6000 TO 6008
390. PRINT JOINT DISPLACEMENTS LIST 4
```

JOINT DISPLACEMENT (INCH RADIANS) STRUCTURE TYPE = SPACE

JOINT	LOAD	X-TRANS	Y-TRANS	Z-TRANS	X-ROTAN	Y-ROTAN	Z-ROTAN
4	600	-0.02952	-0.00239	0.00000	0.00000	0.00000	0.00002
	601	-0.00784	-0.02619	0.00000	0.00000	0.00000	0.00011
	602	0.00450	-0.05092	0.00000	0.00000	0.00000	0.00018
	603	0.00903	-0.07462	0.00000	0.00000	0.00000	0.00022
	604	0.00733	-0.09532	0.00000	0.00000	0.00000	0.00023
	605	0.00095	-0.11106	0.00000	0.00000	0.00000	0.00019
	606	-0.00855	-0.11986	0.00000	0.00000	0.00000	0.00008
	607	-0.00978	-0.12631	0.00000	0.00000	0.00000	0.00001
	608	0.00048	-0.14475	0.00000	0.00000	0.00000	-0.00004
	609	0.00204	-0.15640	0.00000	0.00000	0.00000	-0.00004
	610	-0.00202	-0.16122	0.00000	0.00000	0.00000	-0.00001
	611	-0.00856	-0.15923	0.00000	0.00000	0.00000	0.00003
	6000	-0.03065	-0.00123	0.00000	0.00000	0.00000	0.00002
	6001	-0.01372	-0.01982	0.00000	0.00000	0.00000	0.00008
	6002	-0.00006	-0.04327	0.00000	0.00000	0.00000	0.00015
	6003	0.02042	-0.08037	0.00000	0.00000	0.00000	0.00026
	6004	0.02873	-0.11586	0.00000	0.00000	0.00000	0.00032
	6005	0.02729	-0.14666	0.00000	0.00000	0.00000	0.00032
	6006	0.01854	-0.16971	0.00000	0.00000	0.00000	0.00024
	6007	0.00857	-0.18290	0.00000	0.00000	0.00000	0.00013
	6008	-0.00777	-0.18560	0.00000	0.00000	0.00000	-0.00005

********** END OF LATEST ANALYSIS RESULT **********

```
391. *** SUPPORT DISPLACEMENTS FROM 1.0DL+1.0LL
392. LOAD LIST 500 TO 511 5000 TO 5008
393. PRINT JOINT DISPLACEMENTS LIST 2
```

JOINT DISPLACEMENT (INCH RADIANS) STRUCTURE TYPE = SPACE

JOINT	LOAD	X-TRANS	Y-TRANS	Z-TRANS	X-ROTAN	Y-ROTAN	Z-ROTAN
2	500	0.06286	0.00000	0.00000	0.00000	0.00000	-0.00049
	501	0.07390	0.00000	0.00000	0.00000	0.00000	-0.00069
	502	0.08311	0.00000	0.00000	0.00000	0.00000	-0.00082
	503	0.09047	0.00000	0.00000	0.00000	0.00000	-0.00088
	504	0.09599	0.00000	0.00000	0.00000	0.00000	-0.00089
	505	0.09968	0.00000	0.00000	0.00000	0.00000	-0.00085
	506	0.10152	0.00000	0.00000	0.00000	0.00000	-0.00078
	507	0.10423	0.00000	0.00000	0.00000	0.00000	-0.00078
	508	0.11420	0.00000	0.00000	0.00000	0.00000	-0.00090
	509	0.12048	0.00000	0.00000	0.00000	0.00000	-0.00093
	510	0.12309	0.00000	0.00000	0.00000	0.00000	-0.00091
	511	0.12201	0.00000	0.00000	0.00000	0.00000	-0.00085
	5000	0.06231	0.00000	0.00000	0.00000	0.00000	-0.00048
	5001	0.07094	0.00000	0.00000	0.00000	0.00000	-0.00064
	5002	0.08007	0.00000	0.00000	0.00000	0.00000	-0.00078
	5003	0.09445	0.00000	0.00000	0.00000	0.00000	-0.00098
	5004	0.10595	0.00000	0.00000	0.00000	0.00000	-0.00109
	5005	0.11458	0.00000	0.00000	0.00000	0.00000	-0.00111
	5006	0.12034	0.00000	0.00000	0.00000	0.00000	-0.00106
	5007	0.12339	0.00000	0.00000	0.00000	0.00000	-0.00099
	5008	0.12398	0.00000	0.00000	0.00000	0.00000	-0.00086

********** END OF LATEST ANALYSIS RESULT **********

394. LOAD LIST 300 TO 311 400 TO 411 3000 TO 3008 4000 TO 4008
395. PRINT MEMBER FORCES ALL

MEMBER END FORCES STRUCTURE TYPE = SPACE

ALL UNITS ARE -- KIP FEET (LOCAL)

MEMBER	LOAD	JT	AXIAL	SHEAR-Y	SHEAR-Z	TORSION	MOM-Y	MOM-Z
1	300	1	10.50	2.48	0.00	0.00	0.00	0.00
		3	-9.26	4.75	0.00	0.00	0.00	-17.18
	301	1	10.16	2.30	0.00	0.00	0.00	0.00
		3	-8.92	4.93	0.00	0.00	0.00	-19.02
	302	1	9.83	2.14	0.00	0.00	0.00	0.00
		3	-8.58	5.09	0.00	0.00	0.00	-20.55
	303	1	9.49	2.02	0.00	0.00	0.00	0.00
		3	-8.24	5.21	0.00	0.00	0.00	-21.78
	304	1	9.15	1.93	0.00	0.00	0.00	0.00
		3	-7.91	5.30	0.00	0.00	0.00	-22.70
	305	1	8.82	1.87	0.00	0.00	0.00	0.00
		3	-7.57	5.36	0.00	0.00	0.00	-23.32
	306	1	8.48	1.84	0.00	0.00	0.00	0.00
		3	-7.23	5.39	0.00	0.00	0.00	-23.62
	307	1	12.73	1.79	0.00	0.00	0.00	0.00
		3	-11.49	5.44	0.00	0.00	0.00	-24.08
	308	1	12.06	1.62	0.00	0.00	0.00	0.00
		3	-10.81	5.61	0.00	0.00	0.00	-25.74
	309	1	11.38	1.52	0.00	0.00	0.00	0.00
		3	-10.14	5.71	0.00	0.00	0.00	-26.78
	310	1	10.71	1.48	0.00	0.00	0.00	0.00
		3	-9.47	5.75	0.00	0.00	0.00	-27.22
	311	1	10.04	1.49	0.00	0.00	0.00	0.00
		3	-8.79	5.74	0.00	0.00	0.00	-27.04
	400	1	10.50	-1.48	0.00	0.00	0.00	0.00
		3	-9.26	0.93	0.00	0.00	0.00	-9.79
	401	1	10.16	-1.67	0.00	0.00	0.00	0.00
		3	-8.92	1.12	0.00	0.00	0.00	-11.63
	402	1	9.83	-1.82	0.00	0.00	0.00	0.00
		3	-8.58	1.27	0.00	0.00	0.00	-13.16
	403	1	9.49	-1.94	0.00	0.00	0.00	0.00
		3	-8.24	1.39	0.00	0.00	0.00	-14.39
	404	1	9.15	-2.03	0.00	0.00	0.00	0.00
		3	-7.91	1.48	0.00	0.00	0.00	-15.31
	405	1	8.82	-2.10	0.00	0.00	0.00	0.00
		3	-7.57	1.55	0.00	0.00	0.00	-15.92
	406	1	8.48	-2.13	0.00	0.00	0.00	0.00
		3	-7.23	1.58	0.00	0.00	0.00	-16.23
	407	1	12.73	-2.17	0.00	0.00	0.00	0.00
		3	-11.49	1.62	0.00	0.00	0.00	-16.68
	408	1	12.06	-2.34	0.00	0.00	0.00	0.00
		3	-10.81	1.79	0.00	0.00	0.00	-18.34

MEMBER END FORCES STRUCTURE TYPE = SPACE

ALL UNITS ARE -- KIP FEET (LOCAL)

MEMBER	LOAD	JT	AXIAL	SHEAR-Y	SHEAR-Z	TORSION	MOM-Y	MOM-Z
	409	1	11.38	-2.44	0.00	0.00	0.00	0.00
		3	-10.14	1.89	0.00	0.00	0.00	-19.39
	410	1	10.71	-2.49	0.00	0.00	0.00	0.00
		3	-9.47	1.94	0.00	0.00	0.00	-19.82
	411	1	10.04	-2.47	0.00	0.00	0.00	0.00
		3	-8.79	1.92	0.00	0.00	0.00	-19.64
	3000	1	9.53	2.49	0.00	0.00	0.00	0.00
		3	-8.28	4.74	0.00	0.00	0.00	-17.09
	3001	1	9.26	2.35	0.00	0.00	0.00	0.00
		3	-8.02	4.88	0.00	0.00	0.00	-18.53
	3002	1	12.48	2.19	0.00	0.00	0.00	0.00
		3	-11.23	5.04	0.00	0.00	0.00	-20.05
	3003	1	11.95	1.95	0.00	0.00	0.00	0.00
		3	-10.71	5.28	0.00	0.00	0.00	-22.45
	3004	1	11.42	1.76	0.00	0.00	0.00	0.00
		3	-10.18	5.47	0.00	0.00	0.00	-24.36
	3005	1	10.90	1.62	0.00	0.00	0.00	0.00
		3	-9.65	5.61	0.00	0.00	0.00	-25.80
	3006	1	10.37	1.52	0.00	0.00	0.00	0.00
		3	-9.13	5.71	0.00	0.00	0.00	-26.76
	3007	1	9.95	1.47	0.00	0.00	0.00	0.00
		3	-8.71	5.76	0.00	0.00	0.00	-27.27
	3008	1	9.43	1.46	0.00	0.00	0.00	0.00
		3	-8.18	5.77	0.00	0.00	0.00	-27.37
	4000	1	9.53	-1.47	0.00	0.00	0.00	0.00
		3	-8.28	0.92	0.00	0.00	0.00	-9.69
	4001	1	9.26	-1.62	0.00	0.00	0.00	0.00
		3	-8.02	1.07	0.00	0.00	0.00	-11.13
	4002	1	12.48	-1.77	0.00	0.00	0.00	0.00
		3	-11.23	1.22	0.00	0.00	0.00	-12.65
	4003	1	11.95	-2.01	0.00	0.00	0.00	0.00
		3	-10.71	1.46	0.00	0.00	0.00	-15.05
	4004	1	11.42	-2.20	0.00	0.00	0.00	0.00
		3	-10.18	1.65	0.00	0.00	0.00	-16.97
	4005	1	10.90	-2.34	0.00	0.00	0.00	0.00
		3	-9.65	1.79	0.00	0.00	0.00	-18.41
	4006	1	10.37	-2.44	0.00	0.00	0.00	0.00
		3	-9.13	1.89	0.00	0.00	0.00	-19.37
	4007	1	9.95	-2.49	0.00	0.00	0.00	0.00
		3	-8.71	1.94	0.00	0.00	0.00	-19.87
	4008	1	9.43	-2.50	0.00	0.00	0.00	0.00
		3	-8.18	1.95	0.00	0.00	0.00	-19.97
2	300	2	6.12	-2.48	0.00	0.00	0.00	0.00
		5	-4.87	-4.75	0.00	0.00	0.00	17.18

MEMBER END FORCES STRUCTURE TYPE = SPACE

ALL UNITS ARE -- KIP FEET (LOCAL)

MEMBER	LOAD	JT	AXIAL	SHEAR-Y	SHEAR-Z	TORSION	MOM-Y	MOM-Z
	301	2	6.46	-2.30	0.00	0.00	0.00	0.00
		5	-5.21	-4.93	0.00	0.00	0.00	19.02
	302	2	6.79	-2.14	0.00	0.00	0.00	0.00
		5	-5.55	-5.09	0.00	0.00	0.00	20.55
	303	2	7.13	-2.02	0.00	0.00	0.00	0.00
		5	-5.88	-5.21	0.00	0.00	0.00	21.78
	304	2	7.47	-1.93	0.00	0.00	0.00	0.00
		5	-6.22	-5.30	0.00	0.00	0.00	22.70
	305	2	7.80	-1.87	0.00	0.00	0.00	0.00
		5	-6.56	-5.36	0.00	0.00	0.00	23.32
	306	2	8.14	-1.84	0.00	0.00	0.00	0.00
		5	-6.90	-5.39	0.00	0.00	0.00	23.62
	307	2	8.41	-1.79	0.00	0.00	0.00	0.00
		5	-7.16	-5.44	0.00	0.00	0.00	24.08
	308	2	9.08	-1.62	0.00	0.00	0.00	0.00
		5	-7.84	-5.61	0.00	0.00	0.00	25.74
	309	2	9.76	-1.52	0.00	0.00	0.00	0.00
		5	-8.51	-5.71	0.00	0.00	0.00	26.78
	310	2	10.43	-1.48	0.00	0.00	0.00	0.00
		5	-9.19	-5.75	0.00	0.00	0.00	27.22
	311	2	11.10	-1.49	0.00	0.00	0.00	0.00
		5	-9.86	-5.74	0.00	0.00	0.00	27.04
	400	2	6.12	1.48	0.00	0.00	0.00	0.00
		5	-4.87	-0.93	0.00	0.00	0.00	9.79
	401	2	6.46	1.67	0.00	0.00	0.00	0.00
		5	-5.21	-1.12	0.00	0.00	0.00	11.63
	402	2	6.79	1.82	0.00	0.00	0.00	0.00
		5	-5.55	-1.27	0.00	0.00	0.00	13.16
	403	2	7.13	1.94	0.00	0.00	0.00	0.00
		5	-5.88	-1.39	0.00	0.00	0.00	14.39
	404	2	7.47	2.03	0.00	0.00	0.00	0.00
		5	-6.22	-1.48	0.00	0.00	0.00	15.31
	405	2	7.80	2.10	0.00	0.00	0.00	0.00
		5	-6.56	-1.55	0.00	0.00	0.00	15.92
	406	2	8.14	2.13	0.00	0.00	0.00	0.00
		5	-6.90	-1.58	0.00	0.00	0.00	16.23
	407	2	8.41	2.17	0.00	0.00	0.00	0.00
		5	-7.16	-1.62	0.00	0.00	0.00	16.68
	408	2	9.08	2.34	0.00	0.00	0.00	0.00
		5	-7.84	-1.79	0.00	0.00	0.00	18.34
	409	2	9.76	2.44	0.00	0.00	0.00	0.00
		5	-8.51	-1.89	0.00	0.00	0.00	19.39
	410	2	10.43	2.49	0.00	0.00	0.00	0.00
		5	-9.19	-1.94	0.00	0.00	0.00	19.82
	411	2	11.10	2.47	0.00	0.00	0.00	0.00
		5	-9.86	-1.92	0.00	0.00	0.00	19.64

MEMBER END FORCES STRUCTURE TYPE = SPACE

ALL UNITS ARE -- KIP FEET (LOCAL)

MEMBER	LOAD	JT	AXIAL	SHEAR-Y	SHEAR-Z	TORSION	MOM-Y	MOM-Z
	3000	2	6.10	-2.49	0.00	0.00	0.00	0.00
		5	-4.86	-4.74	0.00	0.00	0.00	17.09
	3001	2	6.37	-2.35	0.00	0.00	0.00	0.00
		5	-5.12	-4.88	0.00	0.00	0.00	18.53
	3002	2	6.68	-2.19	0.00	0.00	0.00	0.00
		5	-5.44	-5.04	0.00	0.00	0.00	20.05
	3003	2	7.21	-1.95	0.00	0.00	0.00	0.00
		5	-5.97	-5.28	0.00	0.00	0.00	22.45
	3004	2	7.74	-1.76	0.00	0.00	0.00	0.00
		5	-6.49	-5.47	0.00	0.00	0.00	24.36
	3005	2	8.26	-1.62	0.00	0.00	0.00	0.00
		5	-7.02	-5.61	0.00	0.00	0.00	25.80
	3006	2	8.79	-1.52	0.00	0.00	0.00	0.00
		5	-7.55	-5.71	0.00	0.00	0.00	26.76
	3007	2	9.21	-1.47	0.00	0.00	0.00	0.00
		5	-7.96	-5.76	0.00	0.00	0.00	27.27
	3008	2	9.73	-1.46	0.00	0.00	0.00	0.00
		5	-8.49	-5.77	0.00	0.00	0.00	27.37
	4000	2	6.10	1.47	0.00	0.00	0.00	0.00
		5	-4.86	-0.92	0.00	0.00	0.00	9.69
	4001	2	6.37	1.62	0.00	0.00	0.00	0.00
		5	-5.12	-1.07	0.00	0.00	0.00	11.13
	4002	2	6.68	1.77	0.00	0.00	0.00	0.00
		5	-5.44	-1.22	0.00	0.00	0.00	12.65
	4003	2	7.21	2.01	0.00	0.00	0.00	0.00
		5	-5.97	-1.46	0.00	0.00	0.00	15.05
	4004	2	7.74	2.20	0.00	0.00	0.00	0.00
		5	-6.49	-1.65	0.00	0.00	0.00	16.97
	4005	2	8.26	2.34	0.00	0.00	0.00	0.00
		5	-7.02	-1.79	0.00	0.00	0.00	18.41
	4006	2	8.79	2.44	0.00	0.00	0.00	0.00
		5	-7.55	-1.89	0.00	0.00	0.00	19.37
	4007	2	9.21	2.49	0.00	0.00	0.00	0.00
		5	-7.96	-1.94	0.00	0.00	0.00	19.87
	4008	2	9.73	2.50	0.00	0.00	0.00	0.00
		5	-8.49	-1.95	0.00	0.00	0.00	19.97
3	300	3	4.75	9.26	0.00	0.00	0.00	16.50
		4	-4.75	0.07	0.00	0.00	0.00	13.81
	301	3	4.93	8.92	0.00	0.00	0.00	18.61
		4	-4.93	0.41	0.00	0.00	0.00	16.37
	302	3	5.09	8.58	0.00	0.00	0.00	20.38
		4	-5.09	0.74	0.00	0.00	0.00	19.26
	303	3	5.21	8.24	0.00	0.00	0.00	21.83
		4	-5.21	1.08	0.00	0.00	0.00	22.47

MEMBER END FORCES STRUCTURE TYPE = SPACE

ALL UNITS ARE -- KIP FEET (LOCAL)

MEMBER	LOAD	JT	AXIAL	SHEAR-Y	SHEAR-Z	TORSION	MOM-Y	MOM-Z
	304	3	5.30	7.91	0.00	0.00	0.00	22.95
		4	-5.30	1.42	0.00	0.00	0.00	26.01
	305	3	5.36	7.57	0.00	0.00	0.00	23.75
		4	-5.36	1.76	0.00	0.00	0.00	29.88
	306	3	5.39	7.23	0.00	0.00	0.00	24.21
		4	-5.39	2.09	0.00	0.00	0.00	34.07
	307	3	5.44	11.49	0.00	0.00	0.00	22.93
		4	-5.44	-2.16	0.00	0.00	0.00	36.41
	308	3	5.61	10.81	0.00	0.00	0.00	24.98
		4	-5.61	-1.49	0.00	0.00	0.00	34.63
	309	3	5.71	10.14	0.00	0.00	0.00	26.38
		4	-5.71	-0.81	0.00	0.00	0.00	33.51
	310	3	5.75	9.47	0.00	0.00	0.00	27.12
		4	-5.75	-0.14	0.00	0.00	0.00	33.05
	311	3	5.74	8.79	0.00	0.00	0.00	27.21
		4	-5.74	0.53	0.00	0.00	0.00	33.24
	400	3	0.93	9.26	0.00	0.00	0.00	6.57
		4	-0.93	0.07	0.00	0.00	0.00	23.75
	401	3	1.12	8.92	0.00	0.00	0.00	8.67
		4	-1.12	0.41	0.00	0.00	0.00	26.31
	402	3	1.27	8.58	0.00	0.00	0.00	10.44
		4	-1.27	0.74	0.00	0.00	0.00	29.19
	403	3	1.39	8.24	0.00	0.00	0.00	11.89
		4	-1.39	1.08	0.00	0.00	0.00	32.41
	404	3	1.48	7.91	0.00	0.00	0.00	13.02
		4	-1.48	1.42	0.00	0.00	0.00	35.95
	405	3	1.55	7.57	0.00	0.00	0.00	13.81
		4	-1.55	1.76	0.00	0.00	0.00	39.81
	406	3	1.58	7.23	0.00	0.00	0.00	14.28
		4	-1.58	2.09	0.00	0.00	0.00	44.01
	407	3	1.62	11.49	0.00	0.00	0.00	12.99
		4	-1.62	-2.16	0.00	0.00	0.00	46.34
	408	3	1.79	10.81	0.00	0.00	0.00	15.04
		4	-1.79	-1.49	0.00	0.00	0.00	44.57
	409	3	1.89	10.14	0.00	0.00	0.00	16.44
		4	-1.89	-0.81	0.00	0.00	0.00	43.45
	410	3	1.94	9.47	0.00	0.00	0.00	17.19
		4	-1.94	-0.14	0.00	0.00	0.00	42.99
	411	3	1.92	8.79	0.00	0.00	0.00	17.27
		4	-1.92	0.53	0.00	0.00	0.00	43.18
	3000	3	4.74	8.28	0.00	0.00	0.00	16.81
		4	-4.74	0.05	0.00	0.00	0.00	13.70
	3001	3	4.88	8.02	0.00	0.00	0.00	18.45
		4	-4.88	0.32	0.00	0.00	0.00	15.70
	3002	3	5.04	11.23	0.00	0.00	0.00	18.74
		4	-5.04	0.64	0.00	0.00	0.00	18.34

MEMBER END FORCES STRUCTURE TYPE = SPACE

ALL UNITS ARE -- KIP FEET (LOCAL)

MEMBER	LOAD	JT	AXIAL	SHEAR-Y	SHEAR-Z	TORSION	MOM-Y	MOM-Z
	3003	3	5.28	10.71	0.00	0.00	0.00	21.52
		4	-5.28	1.16	0.00	0.00	0.00	22.85
	3004	3	5.47	10.18	0.00	0.00	0.00	23.78
		4	-5.47	1.69	0.00	0.00	0.00	27.87
	3005	3	5.61	9.65	0.00	0.00	0.00	25.53
		4	-5.61	2.22	0.00	0.00	0.00	33.40
	3006	3	5.71	9.13	0.00	0.00	0.00	26.77
		4	-5.71	2.74	0.00	0.00	0.00	39.44
	3007	3	5.76	8.71	0.00	0.00	0.00	27.49
		4	-5.76	-0.37	0.00	0.00	0.00	43.90
	3008	3	5.77	8.18	0.00	0.00	0.00	27.81
		4	-5.77	0.15	0.00	0.00	0.00	43.79
	4000	3	0.92	8.28	0.00	0.00	0.00	6.87
		4	-0.92	0.05	0.00	0.00	0.00	23.64
	4001	3	1.07	8.02	0.00	0.00	0.00	8.52
		4	-1.07	0.32	0.00	0.00	0.00	25.64
	4002	3	1.22	11.23	0.00	0.00	0.00	8.81
		4	-1.22	0.64	0.00	0.00	0.00	28.28
	4003	3	1.46	10.71	0.00	0.00	0.00	11.58
		4	-1.46	1.16	0.00	0.00	0.00	32.79
	4004	3	1.65	10.18	0.00	0.00	0.00	13.84
		4	-1.65	1.69	0.00	0.00	0.00	37.81
	4005	3	1.79	9.65	0.00	0.00	0.00	15.60
		4	-1.79	2.22	0.00	0.00	0.00	43.34
	4006	3	1.89	9.13	0.00	0.00	0.00	16.84
		4	-1.89	2.74	0.00	0.00	0.00	49.38
	4007	3	1.94	8.71	0.00	0.00	0.00	17.55
		4	-1.94	-0.37	0.00	0.00	0.00	53.83
	4008	3	1.95	8.18	0.00	0.00	0.00	17.88
		4	-1.95	0.15	0.00	0.00	0.00	53.73
4	300	5	4.75	4.87	0.00	0.00	0.00	18.32
		4	-4.75	-0.07	0.00	0.00	0.00	13.81
	301	5	4.93	5.21	0.00	0.00	0.00	20.14
		4	-4.93	-0.41	0.00	0.00	0.00	16.37
	302	5	5.09	5.55	0.00	0.00	0.00	21.64
		4	-5.09	-0.74	0.00	0.00	0.00	19.26
	303	5	5.21	5.88	0.00	0.00	0.00	22.81
		4	-5.21	-1.08	0.00	0.00	0.00	22.47
	304	5	5.30	6.22	0.00	0.00	0.00	23.65
		4	-5.30	-1.42	0.00	0.00	0.00	26.01
	305	5	5.36	6.56	0.00	0.00	0.00	24.17
		4	-5.36	-1.76	0.00	0.00	0.00	29.88
	306	5	5.39	6.90	0.00	0.00	0.00	24.35
		4	-5.39	-2.09	0.00	0.00	0.00	34.07

MEMBER END FORCES STRUCTURE TYPE = SPACE

ALL UNITS ARE -- KIP FEET (LOCAL)

MEMBER	LOAD	JT	AXIAL	SHEAR-Y	SHEAR-Z	TORSION	MOM-Y	MOM-Z
	307	5	5.44	7.16	0.00	0.00	0.00	24.73
		4	-5.44	2.16	0.00	0.00	0.00	36.41
	308	5	5.61	7.84	0.00	0.00	0.00	26.22
		4	-5.61	1.49	0.00	0.00	0.00	34.63
	309	5	5.71	8.51	0.00	0.00	0.00	27.06
		4	-5.71	0.81	0.00	0.00	0.00	33.51
	310	5	5.75	9.19	0.00	0.00	0.00	27.24
		4	-5.75	0.14	0.00	0.00	0.00	33.05
	311	5	5.74	9.86	0.00	0.00	0.00	26.77
		4	-5.74	-0.53	0.00	0.00	0.00	33.24
	400	5	0.93	4.87	0.00	0.00	0.00	8.38
		4	-0.93	-0.07	0.00	0.00	0.00	23.75
	401	5	1.12	5.21	0.00	0.00	0.00	10.21
		4	-1.12	-0.41	0.00	0.00	0.00	26.31
	402	5	1.27	5.55	0.00	0.00	0.00	11.70
		4	-1.27	-0.74	0.00	0.00	0.00	29.19
	403	5	1.39	5.88	0.00	0.00	0.00	12.87
		4	-1.39	-1.08	0.00	0.00	0.00	32.41
	404	5	1.48	6.22	0.00	0.00	0.00	13.71
		4	-1.48	-1.42	0.00	0.00	0.00	35.95
	405	5	1.55	6.56	0.00	0.00	0.00	14.23
		4	-1.55	-1.76	0.00	0.00	0.00	39.81
	406	5	1.58	6.90	0.00	0.00	0.00	14.42
		4	-1.58	-2.09	0.00	0.00	0.00	44.01
	407	5	1.62	7.16	0.00	0.00	0.00	14.79
		4	-1.62	2.16	0.00	0.00	0.00	46.34
	408	5	1.79	7.84	0.00	0.00	0.00	16.28
		4	-1.79	1.49	0.00	0.00	0.00	44.57
	409	5	1.89	8.51	0.00	0.00	0.00	17.12
		4	-1.89	0.81	0.00	0.00	0.00	43.45
	410	5	1.94	9.19	0.00	0.00	0.00	17.30
		4	-1.94	0.14	0.00	0.00	0.00	42.99
	411	5	1.92	9.86	0.00	0.00	0.00	16.83
		4	-1.92	-0.53	0.00	0.00	0.00	43.18
	3000	5	4.74	4.86	0.00	0.00	0.00	18.23
		4	-4.74	-0.05	0.00	0.00	0.00	13.70
	3001	5	4.88	5.12	0.00	0.00	0.00	19.65
		4	-4.88	-0.32	0.00	0.00	0.00	15.70
	3002	5	5.04	5.44	0.00	0.00	0.00	21.15
		4	-5.04	-0.64	0.00	0.00	0.00	18.34
	3003	5	5.28	5.97	0.00	0.00	0.00	23.48
		4	-5.28	-1.16	0.00	0.00	0.00	22.85
	3004	5	5.47	6.49	0.00	0.00	0.00	25.31
		4	-5.47	-1.69	0.00	0.00	0.00	27.87
	3005	5	5.61	7.02	0.00	0.00	0.00	26.63
		4	-5.61	-2.22	0.00	0.00	0.00	33.40

MEMBER END FORCES STRUCTURE TYPE = SPACE

ALL UNITS ARE -- KIP FEET (LOCAL)

MEMBER	LOAD	JT	AXIAL	SHEAR-Y	SHEAR-Z	TORSION	MOM-Y	MOM-Z
	3006	5	5.71	7.55	0.00	0.00	0.00	27.43
		4	-5.71	-2.74	0.00	0.00	0.00	39.44
	3007	5	5.76	7.96	0.00	0.00	0.00	27.80
		4	-5.76	0.37	0.00	0.00	0.00	43.90
	3008	5	5.77	8.49	0.00	0.00	0.00	27.69
		4	-5.77	-0.15	0.00	0.00	0.00	43.79
	4000	5	0.92	4.86	0.00	0.00	0.00	8.29
		4	-0.92	-0.05	0.00	0.00	0.00	23.64
	4001	5	1.07	5.12	0.00	0.00	0.00	9.72
		4	-1.07	-0.32	0.00	0.00	0.00	25.64
	4002	5	1.22	5.44	0.00	0.00	0.00	11.21
		4	-1.22	-0.64	0.00	0.00	0.00	28.28
	4003	5	1.46	5.97	0.00	0.00	0.00	13.55
		4	-1.46	-1.16	0.00	0.00	0.00	32.79
	4004	5	1.65	6.49	0.00	0.00	0.00	15.37
		4	-1.65	-1.69	0.00	0.00	0.00	37.81
	4005	5	1.79	7.02	0.00	0.00	0.00	16.69
		4	-1.79	-2.22	0.00	0.00	0.00	43.34
	4006	5	1.89	7.55	0.00	0.00	0.00	17.49
		4	-1.89	-2.74	0.00	0.00	0.00	49.38
	4007	5	1.94	7.96	0.00	0.00	0.00	17.86
		4	-1.94	0.37	0.00	0.00	0.00	53.83
	4008	5	1.95	8.49	0.00	0.00	0.00	17.75
		4	-1.95	-0.15	0.00	0.00	0.00	53.73

********** END OF LATEST ANALYSIS RESULT **********

```
396. ***
397. LOAD LIST 100 TO 111 200 TO 211 1000 TO 1008 2001 TO 2008
398. PRINT FORCE ENVELOPE NSECTION 4 ALL
```

MEMBER FORCE ENVELOPE

ALL UNITS ARE KIP FEET

MEMB	DISTANCE		FY	LD	MZ	LD	FZ	LD	MY	LD
1	0.00	MAX	3.63	1000	0.00	2008	0.00	2008	0.00	2008
		MIN	-3.72	2008	0.00	2008	0.00	2008	0.00	2008
	0.83	MAX	2.38	1000	3.04	2008	0.00	2008	0.00	2008
		MIN	-3.57	2008	-2.50	1000	0.00	2008	0.00	2008
	1.67	MAX	1.20	1000	5.95	2008	0.00	2008	0.00	2008
		MIN	-3.44	2008	-3.99	1000	0.00	2008	0.00	2008
	2.50	MAX	0.09	1000	8.77	2008	0.00	2008	0.00	2008
		MIN	-3.32	2008	-4.52	1000	0.00	2008	0.00	2008
	3.33	MAX	-0.96	1000	11.50	2008	0.00	2008	0.00	2008
		MIN	-3.23	2008	-4.16	1000	0.00	2008	0.00	2008
	4.17	MAX	-1.37	200	14.16	2008	0.00	2008	0.00	2008
		MIN	-3.74	1008	-2.95	1000	0.00	2008	0.00	2008
	5.00	MAX	-1.32	200	16.76	2008	0.00	2008	0.00	2008
		MIN	-4.65	1008	-0.95	1000	0.00	2008	0.00	2008
	5.83	MAX	-1.28	200	19.33	2008	0.00	2008	0.00	2008
		MIN	-5.50	1008	1.79	1000	0.00	2008	0.00	2008
	6.67	MAX	-1.26	200	21.87	2008	0.00	2008	0.00	2008
		MIN	-6.29	1008	5.21	1000	0.00	2008	0.00	2008
	7.50	MAX	-1.26	200	24.41	2008	0.00	2008	0.00	2008
		MIN	-7.01	1008	9.26	1000	0.00	2008	0.00	2008
	8.33	MAX	-1.28	200	28.87	1008	0.00	2008	0.00	2008
		MIN	-7.66	1008	12.10	200	0.00	2008	0.00	2008
	9.17	MAX	-1.32	200	35.50	1008	0.00	2008	0.00	2008
		MIN	-8.25	1008	13.19	200	0.00	2008	0.00	2008
	10.00	MAX	-1.38	200	42.60	1008	0.00	2008	0.00	2008
		MIN	-8.77	1008	14.31	200	0.00	2008	0.00	2008

MAX/MIN FORCE VALUES FOR MEMB 1, AMONGST ALL SECT LOCATIONS

	FY/ FZ	DIST DIST	LD LD	MZ/ MY	DIST DIST	LD LD	FX	DIST	LD
MAX.	3.63	0.00	1000	42.60	10.00	1008			
	0.00	0.00	100	0.00	0.00	100	20.20 C	0.00	107
MIN.	-8.77	10.00	1008	-4.52	2.50	1000			
	0.00	10.00	2008	0.00	10.00	2008	11.07 C	10.00	206

2	0.00	MAX	3.72	2008	0.00	2008	0.00	2008	0.00	2008
		MIN	-3.63	1000	0.00	2008	0.00	2008	0.00	2008
	0.83	MAX	3.57	2008	2.50	1000	0.00	2008	0.00	2008
		MIN	-2.38	1000	-3.04	2008	0.00	2008	0.00	2008

1.67	MAX	3.44	2008	3.99	1000	0.00	2008	0.00	2008
	MIN	-1.20	1000	-5.95	2008	0.00	2008	0.00	2008
2.50	MAX	3.32	2008	4.52	1000	0.00	2008	0.00	2008
	MIN	-0.09	1000	-8.77	2008	0.00	2008	0.00	2008
3.33	MAX	3.23	2008	4.16	1000	0.00	2008	0.00	2008
	MIN	0.96	1000	-11.50	2008	0.00	2008	0.00	2008
4.17	MAX	3.74	1008	2.95	1000	0.00	2008	0.00	2008
	MIN	1.37	200	-14.16	2008	0.00	2008	0.00	2008
5.00	MAX	4.65	1008	0.95	1000	0.00	2008	0.00	2008
	MIN	1.32	200	-16.76	2008	0.00	2008	0.00	2008
5.83	MAX	5.50	1008	-1.79	1000	0.00	2008	0.00	2008
	MIN	1.28	200	-19.33	2008	0.00	2008	0.00	2008
6.67	MAX	6.29	1008	-5.21	1000	0.00	2008	0.00	2008
	MIN	1.26	200	-21.87	2008	0.00	2008	0.00	2008
7.50	MAX	7.01	1008	-9.26	1000	0.00	2008	0.00	2008
	MIN	1.26	200	-24.41	2008	0.00	2008	0.00	2008
8.33	MAX	7.66	1008	-12.10	200	0.00	2008	0.00	2008
	MIN	1.28	200	-28.87	1008	0.00	2008	0.00	2008
9.17	MAX	8.25	1008	-13.19	200	0.00	2008	0.00	2008
	MIN	1.32	200	-35.50	1008	0.00	2008	0.00	2008
10.00	MAX	8.77	1008	-14.31	200	0.00	2008	0.00	2008
	MIN	1.38	200	-42.60	1008	0.00	2008	0.00	2008

MAX/MIN FORCE VALUES FOR MEMB 2, AMONGST ALL SECT LOCATIONS

	FY/ FZ	DIST DIST	LD LD	MZ/ MY	DIST DIST	LD LD	FX	DIST	LD
MAX.	8.77	10.00	1008	4.52	2.50	1000			
	0.00	0.00	100	0.00	0.00	100	17.35 C	0.00	111
MIN.	-3.63	0.00	1000	-42.60	10.00	1008			
	0.00	10.00	2008	0.00	10.00	2008	6.91 C	10.00	1000

3	0.00	MAX	18.51	207	43.16	1008	0.00	2008	0.00	2008
		MIN	11.07	206	9.17	200	0.00	2008	0.00	2008
	1.08	MAX	16.77	208	29.68	1008	0.00	2008	0.00	2008
		MIN	6.13	200	-2.03	201	0.00	2008	0.00	2008
	2.17	MAX	15.09	2004	16.81	1008	0.00	2008	0.00	2008
		MIN	4.97	201	-16.94	2003	0.00	2008	0.00	2008
	3.25	MAX	14.52	2004	4.82	1000	0.00	2008	0.00	2008
		MIN	4.40	201	-28.05	2004	0.00	2008	0.00	2008
	4.33	MAX	13.03	2005	-0.31	1000	0.00	2008	0.00	2008
		MIN	3.24	202	-41.41	2004	0.00	2008	0.00	2008
	5.42	MAX	12.46	2005	-4.82	1000	0.00	2008	0.00	2008
		MIN	2.67	202	-50.22	2005	0.00	2008	0.00	2008
	6.50	MAX	10.97	2006	-8.72	1000	0.00	2008	0.00	2008
		MIN	1.37	2003	-60.32	2005	0.00	2008	0.00	2008
	7.58	MAX	10.40	2006	-12.00	1000	0.00	2008	0.00	2008
		MIN	0.81	2003	-66.83	2006	0.00	2008	0.00	2008
	8.67	MAX	9.11	2007	-14.67	1000	0.00	2008	0.00	2008
		MIN	-0.68	2004	-73.67	2006	0.00	2008	0.00	2008
	9.75	MAX	8.54	2007	-16.72	1000	0.00	2008	0.00	2008
		MIN	-1.25	2004	-79.77	2007	0.00	2008	0.00	2008

10.83	MAX	7.05	2008	-18.15	1000	0.00	2008	0.00	2008
	MIN	-2.74	2005	-83.56	2007	0.00	2008	0.00	2008
11.92	MAX	6.48	2008	-18.97	1000	0.00	2008	0.00	2008
	MIN	-3.31	2005	-85.49	2008	0.00	2008	0.00	2008
13.00	MAX	3.78	207	-19.18	1000	0.00	2008	0.00	2008
	MIN	-4.80	2006	-86.20	2007	0.00	2008	0.00	2008

MAX/MIN FORCE VALUES FOR MEMB 3, AMONGST ALL SECT LOCATIONS

	FY/ FZ	DIST DIST	LD LD	MZ/ MY	DIST DIST	LD LD	FX	DIST	LD
MAX.	18.51	0.00	107	43.16	0.00	1008			
	0.00	0.00	100	0.00	0.00	100	8.77 C	0.00	1008
MIN.	-4.80	13.00	2006	-86.20	13.00	2007			
	0.00	13.00	2008	0.00	13.00	2008	1.38 C	13.00	200

4	0.00	MAX	15.67	211	43.13	1007	0.00	2008	0.00	2008
		MIN	6.91	1000	12.35	200	0.00	2008	0.00	2008
	1.08	MAX	15.10	211	30.21	1006	0.00	2008	0.00	2008
		MIN	6.35	1000	5.14	200	0.00	2008	0.00	2008
	2.17	MAX	14.53	211	19.14	1005	0.00	2008	0.00	2008
		MIN	5.78	1000	-5.58	211	0.00	2008	0.00	2008
	3.25	MAX	13.96	211	9.78	1004	0.00	2008	0.00	2008
		MIN	5.21	1000	-21.01	211	0.00	2008	0.00	2008
	4.33	MAX	13.39	211	2.14	1003	0.00	2008	0.00	2008
		MIN	4.64	1000	-35.83	211	0.00	2008	0.00	2008
	5.42	MAX	11.65	210	-3.36	100	0.00	2008	0.00	2008
		MIN	4.07	1000	-45.39	211	0.00	2008	0.00	2008
	6.50	MAX	11.08	210	-7.47	1000	0.00	2008	0.00	2008
		MIN	3.50	1000	-55.12	210	0.00	2008	0.00	2008
	7.58	MAX	9.33	209	-10.96	1000	0.00	2008	0.00	2008
		MIN	2.60	210	-60.86	210	0.00	2008	0.00	2008
	8.67	MAX	8.76	209	-13.84	1000	0.00	2008	0.00	2008
		MIN	2.03	210	-67.99	209	0.00	2008	0.00	2008
	9.75	MAX	8.15	2008	-16.09	1000	0.00	2008	0.00	2008
		MIN	0.28	209	-75.70	2008	0.00	2008	0.00	2008
	10.83	MAX	6.67	2007	-17.74	1000	0.00	2008	0.00	2008
		MIN	-1.47	208	-84.20	2008	0.00	2008	0.00	2008
	11.92	MAX	6.10	2007	-18.76	1000	0.00	2008	0.00	2008
		MIN	-2.04	208	-85.42	2008	0.00	2008	0.00	2008
	13.00	MAX	4.80	2006	-19.18	1000	0.00	2008	0.00	2008
		MIN	-3.78	207	-86.20	2007	0.00	2008	0.00	2008

MAX/MIN FORCE VALUES FOR MEMB 4, AMONGST ALL SECT LOCATIONS

	FY/ FZ	DIST DIST	LD LD	MZ/ MY	DIST DIST	LD LD	FX	DIST	LD

```
| MAX.      15.67   0.00  111      43.13   0.00 1007
|            0.00   0.00  100       0.00   0.00  100      8.77 C   0.00 1008
| MIN.      -3.78  13.00  207     -86.20  13.00 2007
|            0.00  13.00 2008       0.00  13.00 2008      1.38 C  13.00  200
|-----------------------------------------------------------------------------
```

********** END OF FORCE ENVELOPE FROM INTERNAL STORAGE **********

```
399. LOAD LIST 300 TO 311 400 TO 411 3000 TO 3008 4000 TO 4008
400. PRINT FORCE ENVELOPE NSECTION 4 ALL
```

MEMBER FORCE ENVELOPE

ALL UNITS ARE KIP FEET

MEMB	DISTANCE		FY	LD	MZ	LD	FZ	LD	MY	LD
1	0.00	MAX	2.49	3000	0.00	4008	0.00	4008	0.00	4008
		MIN	-2.50	4008	0.00	4008	0.00	4008	0.00	4008
	0.83	MAX	1.62	3000	2.02	4008	0.00	4008	0.00	4008
		MIN	-2.35	4008	-1.71	3000	0.00	4008	0.00	4008
	1.67	MAX	0.80	3000	3.92	4008	0.00	4008	0.00	4008
		MIN	-2.22	4008	-2.71	3000	0.00	4008	0.00	4008
	2.50	MAX	0.03	3000	5.72	4008	0.00	4008	0.00	4008
		MIN	-2.11	4008	-3.05	3000	0.00	4008	0.00	4008
	3.33	MAX	-0.70	3000	7.44	4008	0.00	4008	0.00	4008
		MIN	-2.01	4008	-2.77	3000	0.00	4008	0.00	4008
	4.17	MAX	-0.91	4000	9.08	4008	0.00	4008	0.00	4008
		MIN	-2.40	3008	-1.90	3000	0.00	4008	0.00	4008
	5.00	MAX	-0.86	4000	10.67	4008	0.00	4008	0.00	4008
		MIN	-3.03	3008	-0.49	3000	0.00	4008	0.00	4008
	5.83	MAX	-0.82	4000	12.23	4008	0.00	4008	0.00	4008
		MIN	-3.61	3008	1.42	3000	0.00	4008	0.00	4008
	6.67	MAX	-0.80	4000	13.76	4008	0.00	4008	0.00	4008
		MIN	-4.14	3008	3.79	3000	0.00	4008	0.00	4008
	7.50	MAX	-0.80	4000	15.28	4008	0.00	4008	0.00	4008
		MIN	-4.62	3008	6.59	3000	0.00	4008	0.00	4008
	8.33	MAX	-0.82	4000	18.33	3008	0.00	4008	0.00	4008
		MIN	-5.05	3008	8.25	4000	0.00	4008	0.00	4008
	9.17	MAX	-0.86	4000	22.70	3008	0.00	4008	0.00	4008
		MIN	-5.43	3008	8.95	4000	0.00	4008	0.00	4008
	10.00	MAX	-0.92	4000	27.37	3008	0.00	4008	0.00	4008
		MIN	-5.77	3008	9.69	4000	0.00	4008	0.00	4008

MAX/MIN FORCE VALUES FOR MEMB 1, AMONGST ALL SECT LOCATIONS

	FY/ FZ	DIST DIST	LD LD	MZ/ MY	DIST DIST	LD LD	FX	DIST	LD
MAX.	2.49	0.00	3000	27.37	10.00	3008			
	0.00	0.00	300	0.00	0.00	300	12.73 C	0.00	307
MIN.	-5.77	10.00	3008	-3.05	2.50	3000			
	0.00	10.00	4008	0.00	10.00	4008	7.23 C	10.00	306

2	0.00	MAX	2.50	4008	0.00	4008	0.00	4008	0.00	4008
		MIN	-2.49	3000	0.00	4008	0.00	4008	0.00	4008
	0.83	MAX	2.35	4008	1.71	3000	0.00	4008	0.00	4008
		MIN	-1.62	3000	-2.02	4008	0.00	4008	0.00	4008

1.67	MAX	2.22	4008	2.71	3000	0.00	4008	0.00	4008
	MIN	-0.80	3000	-3.92	4008	0.00	4008	0.00	4008
2.50	MAX	2.11	4008	3.05	3000	0.00	4008	0.00	4008
	MIN	-0.03	3000	-5.72	4008	0.00	4008	0.00	4008
3.33	MAX	2.01	4008	2.77	3000	0.00	4008	0.00	4008
	MIN	0.70	3000	-7.44	4008	0.00	4008	0.00	4008
4.17	MAX	2.40	3008	1.90	3000	0.00	4008	0.00	4008
	MIN	0.91	4000	-9.08	4008	0.00	4008	0.00	4008
5.00	MAX	3.03	3008	0.49	3000	0.00	4008	0.00	4008
	MIN	0.86	4000	-10.67	4008	0.00	4008	0.00	4008
5.83	MAX	3.61	3008	-1.42	3000	0.00	4008	0.00	4008
	MIN	0.82	4000	-12.23	4008	0.00	4008	0.00	4008
6.67	MAX	4.14	3008	-3.79	3000	0.00	4008	0.00	4008
	MIN	0.80	4000	-13.76	4008	0.00	4008	0.00	4008
7.50	MAX	4.62	3008	-6.59	3000	0.00	4008	0.00	4008
	MIN	0.80	4000	-15.28	4008	0.00	4008	0.00	4008
8.33	MAX	5.05	3008	-8.25	4000	0.00	4008	0.00	4008
	MIN	0.82	4000	-18.33	3008	0.00	4008	0.00	4008
9.17	MAX	5.43	3008	-8.95	4000	0.00	4008	0.00	4008
	MIN	0.86	4000	-22.70	3008	0.00	4008	0.00	4008
10.00	MAX	5.77	3008	-9.69	4000	0.00	4008	0.00	4008
	MIN	0.92	4000	-27.37	3008	0.00	4008	0.00	4008

MAX/MIN FORCE VALUES FOR MEMB 2, AMONGST ALL SECT LOCATIONS

	FY/ FZ	DIST DIST	LD LD	MZ/ MY	DIST DIST	LD LD	FX	DIST	LD
MAX.	5.77	10.00	3008	3.05	2.50	3000			
	0.00	0.00	300	0.00	0.00	300	11.10 C	0.00	311
MIN.	-2.49	0.00	3000	-27.37	10.00	3008			
	0.00	10.00	4008	0.00	10.00	4008	4.86 C	10.00	3000

3	0.00	MAX	11.49	407	27.81	3008	0.00	4008	0.00	4008
		MIN	7.23	306	6.57	400	0.00	4008	0.00	4008
	1.08	MAX	10.41	408	19.17	3008	0.00	4008	0.00	4008
		MIN	4.33	400	-0.78	401	0.00	4008	0.00	4008
	2.17	MAX	9.38	4004	10.96	3008	0.00	4008	0.00	4008
		MIN	3.60	401	-10.16	4003	0.00	4008	0.00	4008
	3.25	MAX	8.98	3004	3.32	3000	0.00	4008	0.00	4008
		MIN	3.20	401	-17.29	4004	0.00	4008	0.00	4008
	4.33	MAX	8.05	4005	-0.30	3000	0.00	4008	0.00	4008
		MIN	2.46	402	-25.62	4004	0.00	4008	0.00	4008
	5.42	MAX	7.65	4005	-3.50	3000	0.00	4008	0.00	4008
		MIN	2.06	402	-31.26	4005	0.00	4008	0.00	4008
	6.50	MAX	6.72	4006	-6.26	3000	0.00	4008	0.00	4008
		MIN	1.24	4003	-37.57	4005	0.00	4008	0.00	4008
	7.58	MAX	6.32	4006	-8.58	3000	0.00	4008	0.00	4008
		MIN	0.84	4003	-41.74	4006	0.00	4008	0.00	4008
	8.67	MAX	5.51	4007	-10.47	3000	0.00	4008	0.00	4008
		MIN	-0.09	4004	-46.02	4006	0.00	4008	0.00	4008
	9.75	MAX	5.11	4007	-11.93	3000	0.00	4008	0.00	4008
		MIN	-0.49	3004	-49.79	4007	0.00	4008	0.00	4008

10.83	MAX	4.18	4008	-12.96	3000	0.00	4008	0.00	4008
	MIN	-1.41	3005	-52.16	4007	0.00	4008	0.00	4008
11.92	MAX	3.78	3008	-13.55	3000	0.00	4008	0.00	4008
	MIN	-1.82	3005	-53.38	4008	0.00	4008	0.00	4008
13.00	MAX	2.16	407	-13.70	3000	0.00	4008	0.00	4008
	MIN	-2.74	4006	-53.83	4007	0.00	4008	0.00	4008

MAX/MIN FORCE VALUES FOR MEMB 3, AMONGST ALL SECT LOCATIONS

	FY/ FZ	DIST DIST	LD LD	MZ/ MY	DIST DIST	LD LD	FX	DIST	LD
MAX.	11.49	0.00	307	27.81	0.00	3008			
	0.00	0.00	300	0.00	0.00	300	5.77 C	0.00	3008
MIN.	-2.74	13.00	4006	-53.83	13.00	4007			
	0.00	13.00	4008	0.00	13.00	4008	0.92 C	13.00	4000

4	0.00	MAX	9.86	311	27.80	3007	0.00	4008	0.00	4008
		MIN	4.86	3000	8.29	4000	0.00	4008	0.00	4008
	1.08	MAX	9.46	411	19.47	3006	0.00	4008	0.00	4008
		MIN	4.46	4000	3.25	4000	0.00	4008	0.00	4008
	2.17	MAX	9.06	411	12.29	3005	0.00	4008	0.00	4008
		MIN	4.06	4000	-3.67	411	0.00	4008	0.00	4008
	3.25	MAX	8.66	411	6.16	3004	0.00	4008	0.00	4008
		MIN	3.66	4000	-13.26	411	0.00	4008	0.00	4008
	4.33	MAX	8.26	411	1.10	3003	0.00	4008	0.00	4008
		MIN	3.26	4000	-22.43	411	0.00	4008	0.00	4008
	5.42	MAX	7.18	410	-2.66	300	0.00	4008	0.00	4008
		MIN	2.86	4000	-28.50	411	0.00	4008	0.00	4008
	6.50	MAX	6.78	410	-5.54	3000	0.00	4008	0.00	4008
		MIN	2.46	4000	-34.60	410	0.00	4008	0.00	4008
	7.58	MAX	5.71	409	-7.99	3000	0.00	4008	0.00	4008
		MIN	1.86	410	-38.33	410	0.00	4008	0.00	4008
	8.67	MAX	5.31	409	-10.00	3000	0.00	4008	0.00	4008
		MIN	1.46	410	-42.77	409	0.00	4008	0.00	4008
	9.75	MAX	4.89	4008	-11.58	3000	0.00	4008	0.00	4008
		MIN	0.39	409	-47.46	4008	0.00	4008	0.00	4008
	10.83	MAX	3.96	4007	-12.72	3000	0.00	4008	0.00	4008
		MIN	-0.69	308	-52.53	4008	0.00	4008	0.00	4008
	11.92	MAX	3.56	4007	-13.43	3000	0.00	4008	0.00	4008
		MIN	-1.09	308	-53.34	4008	0.00	4008	0.00	4008
	13.00	MAX	2.74	4006	-13.70	3000	0.00	4008	0.00	4008
		MIN	-2.16	407	-53.83	4007	0.00	4008	0.00	4008

MAX/MIN FORCE VALUES FOR MEMB 4, AMONGST ALL SECT LOCATIONS

FY/ FZ	DIST DIST	LD LD	MZ/ MY	DIST DIST	LD LD	FX	DIST	LD

```
| MAX.      9.86   0.00  311      27.80   0.00 3007
|           0.00   0.00  300       0.00   0.00  300      5.77 C   0.00 3008
| MIN.     -2.16  13.00  407     -53.83  13.00 4007
|           0.00  13.00 4008       0.00  13.00 4008      0.92 C  13.00 4000
|-----------------------------------------------------------------------------
```

********** END OF FORCE ENVELOPE FROM INTERNAL STORAGE **********

401. FINISH

********** END OF THE STAAD.Pro RUN **********

**** DATE= APR 1,2015 TIME= 9:55:17 ****

```
*************************************************************
*   For technical assistance on STAAD.Pro, please visit     *
*   http://selectservices.bentley.com/en-US/                *
*                                                           *
*   Details about additional assistance from                *
*   Bentley and Partners can be found at program menu       *
*   Help->Technical Support                                 *
*                                                           *
*      Copyright (c) 1997-2014 Bentley Systems, Inc.
*                http://www.bentley.com                     *
*************************************************************
```

Software licensed to	Job No	Sheet No 1	Rev
	Part		
Job Title	Ref		
	By BK	Date 03/16/15	Chd
Client	File 26x10-HL93-Spring.std	Date/Time 16-Mar-2015 14:00	

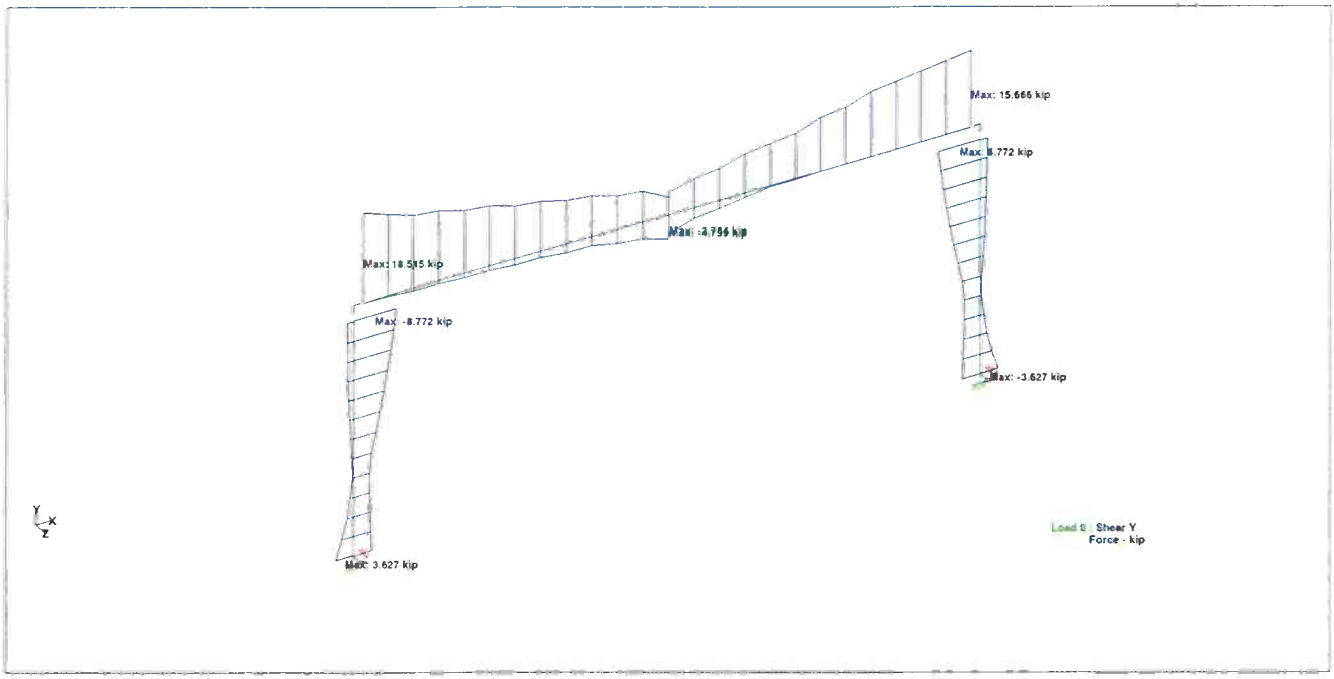

Whole Structure Fy 4.8kip:1ft 0 Envelope

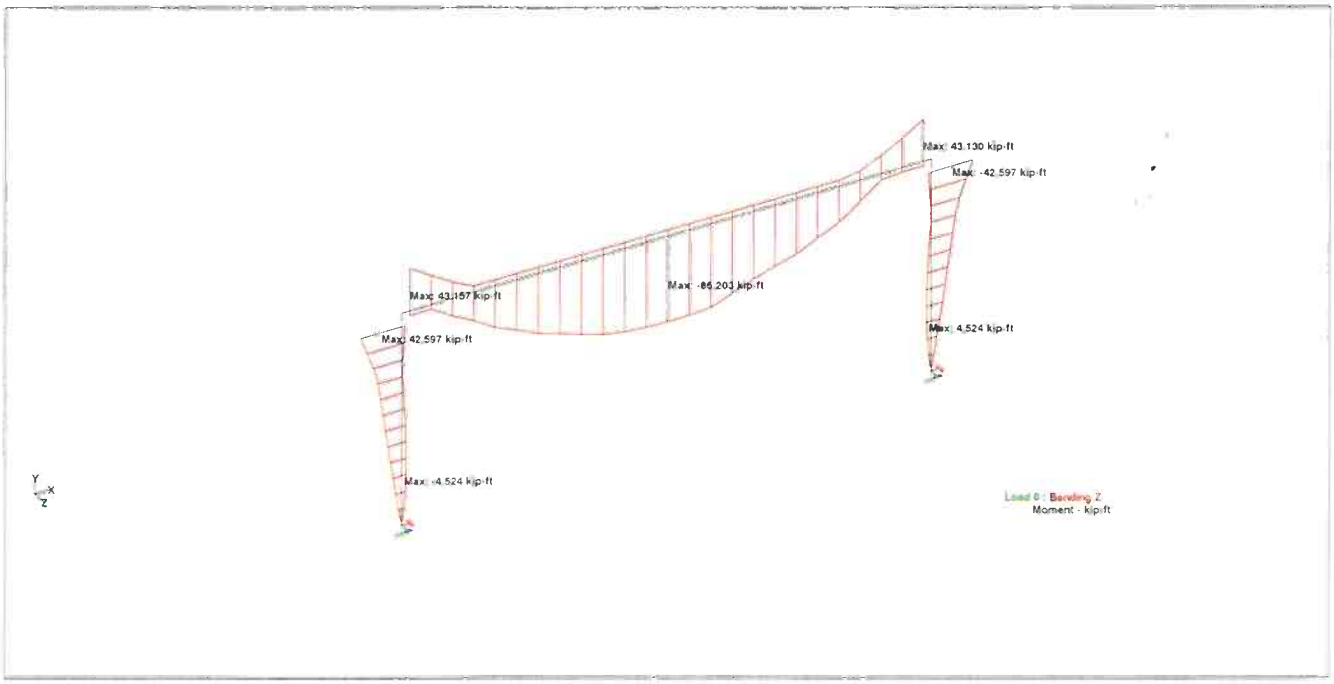

Whole Structure Mz 20kip-ft:1ft 0 Envelope

Section 5
Mathcad Calculations
Pedestal and Footing

PEDESTAL AND FOOTING DESIGN
DESIGN INPUT DATA

PEDESTAL DESIGN

$V_d := 5200lbf$ **Dead Load Vertical Reaction**

REFERENCES:
1. AASHTO
2. Attachment "A" StaadPro computer analysis

$V_l := 7520lbf$ **Live Load Vertical Reaction**

$H := 0lbf$ **Horizontal Reaction**

DESIGN PARAMETERS:

$\gamma_w := 62.4\frac{lbf}{ft^3}$ unit weight of water

$\gamma_c := 150\frac{lbf}{ft^3}$ unit weight of concrete

low?

$\gamma_e := 120\frac{lbf}{ft^3}$ unit weight of earth

$f_c := 5000psi$ $f_y := 60000psi$

$K_{max} := .5$ max. earth pressure coefficient

$K_{min} := .25$ min. earth pressure coefficient

GEOMETRY:

$P_h := 3.0ft$ Pedestal height

$ClearRise := 10ft$

$C := 1.0ft$ Earth cover

$t_t := 16in$ top slab thickness

$P_t := 2.5ft$ pedestal thickness

LATERAL LOADS:

Lateral Earth Pressure:

$H1 := C + t_t + ClearRise$ $H1 = 12.333\,ft$ soil depth at top of pedestal

$H2 := H1 + P_h$ $H2 = 15.333\,ft$ soil depth at bottom of pedestal

$LEPMIN := K_{min}\cdot\gamma_e\cdot 1ft$ $LEPMIN = 30\cdot\frac{lbf}{ft^2}$

$LEPMAX := K_{max}\cdot\gamma_e\cdot 1ft$ $LEPMAX = 60\cdot\frac{lbf}{ft^2}$ maximum lateral earth pressure

Minimum (**EMIN**)

$w_{et} := H1\cdot LEPMIN\cdot 1ft$ $w_{eb} := H2\cdot LEPMIN$

$\boxed{w_{et} = 370\,lbf}$ $\boxed{w_{eb} = 460\cdot\frac{lbf}{ft}}$

Maximum (**EMAX**)

$w_{et} := H1\cdot LEPMAX\cdot 1ft$ $w_{eb} := H2\cdot LEPMAX$

$\boxed{w_{et} = 740\,ft\cdot\frac{lbf}{ft}}$ top of wall $\boxed{w_{eb} = 920\cdot\frac{lbf}{ft}}$ bottom of wall

Internal Fluid Pressure: (IFP)

$w_{ib} := \gamma_w\cdot P_h\cdot 1ft$ $\boxed{w_{ib} = 187\cdot\frac{lbf}{ft}}$ top of pedestal

$w_{ib} := \gamma_w \cdot (ClearRise + P_h) \cdot 1ft$ $\quad w_{ib} = 811 \cdot \frac{lbf}{ft}$ bottom of pedestal

Shear Capacity

$c := 2.0in$ rebar clear distance $\quad d_b := 0.625in$ bar diameter $\quad d := P_t - c - \frac{d_b}{2} \quad d = 27.688 \cdot in$

$f_c := 5 \quad ksi$ $\quad \beta := 2 \quad d_{v1} := 0.9 \cdot d \quad d_{v1} = 24.919 \cdot in \quad b_v := 12in$

$d_{v2} := 0.72 \cdot P_t \quad d_{v2} = 21.6 \cdot in \quad d_v := \max(d_{v1}, d_{v2})$

$\phi V_c := .9 \cdot .0316 \cdot \beta \cdot \sqrt{f_c} \cdot ksi \cdot b_v \cdot d_v \quad \phi V_c = 3.8 \times 10^4 \cdot lbf \quad V_u := 3237lbf$

$if(\phi V_c > V_u, "OK", "NG") = "OK"$

Positive (Inside) Moment:

$d = 27.688 \cdot in \quad f_c := 5000 \quad psi \quad A_s := 0.36in^2$ Use #5 @ 10"

$f_y := 60000 \quad a := \frac{A_s \cdot f_y}{.85 \cdot f_c \cdot 12in} \quad a = 0.424 \cdot in \quad f_y := 60000psi$

$\phi M_n := .95 \cdot A_s \cdot f_y \cdot \left(d - \frac{a}{2}\right) \quad \phi M_n = 4.698 \times 10^4 \cdot ft \cdot lbf \quad M_u := 1777ft \cdot lbf$

$if(\phi M_n > M_u, "OK", "NG") = "OK"$

Negative (Outside Face) Moment:

$d = 27.688 \cdot in \quad f_c := 5000 \quad psi \quad A_s := 0.74in^2$

Use #5 @ 5"

$f_y := 60000 \quad a := \frac{A_s \cdot f_y}{.85 \cdot f_c \cdot 12in} \quad a = 0.871 \cdot in \quad f_y := 60000psi$

$\phi M_n := .95 \cdot A_s \cdot f_y \cdot \left(d - \frac{a}{2}\right) \quad \phi M_n = 9.579 \times 10^4 \cdot ft \cdot lbf \quad M_u := 4680ft \cdot lbf$

$if(\phi M_n > M_u, "OK", "NG") = "OK"$

Distribution Reinforcement;

$P_t = 30 \cdot in \quad A_{sMin} := 12in \cdot \frac{P_t}{2} \cdot 0.002 \quad A_{sMin} = 0.36 \cdot in^2$ #4 @ 6.5 (both side)

LRFD FOOTING DESIGN

Design Parameters:

$\gamma_d := 120\frac{lbf}{ft^3}$ soil weight

$\gamma_c := 150\frac{lbf}{ft^3}$ concrete weight

5000psi?

$f_c := 4000\frac{lbf}{in^2}$ 28 day strength

$K_{max} := .5$ max. earth pressure coefficient

$K_{min} := .25$ min. earth pressure coefficient

+ve lp diagram: Footing extends outside the culvert leg

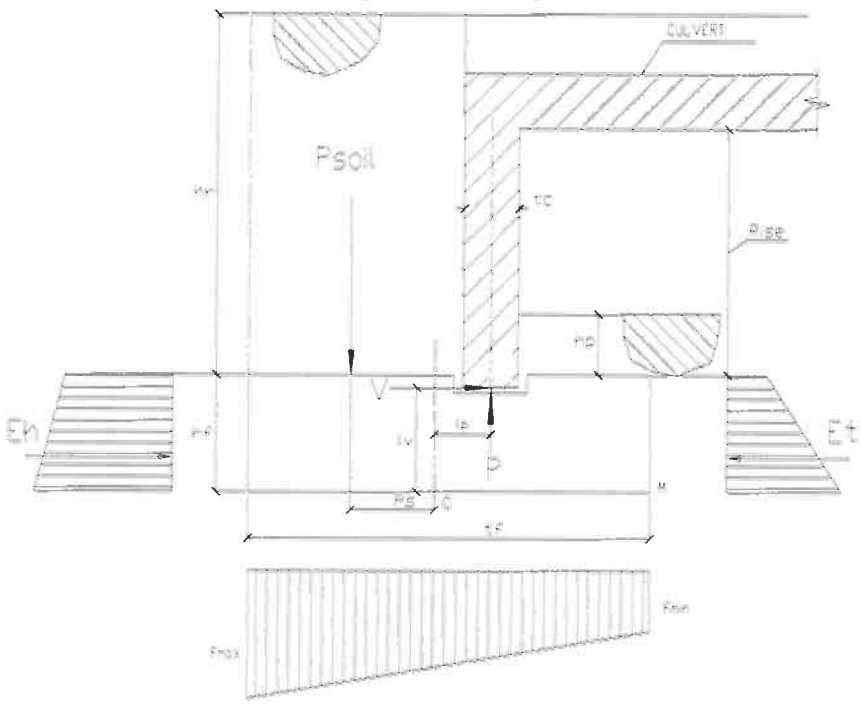

Geometry:

$h_f := 24in$ Footing thickness

$t_f := 108in$ Footing width

$t_c := 10in$ Culvert thickness

$h_r := 15ft$ Retained soil depth

Design Loads from Culvert:

$p := V_d + V_l = 1.272 \times 10^4\ lbf$

$v := 0lbf$

Unfactored Load $i := \frac{1ft}{1ft}$ $i = 1$ per foot increase due to gap in footing

$P := p \cdot i$

$V := v \cdot i$

$P = 1.272 \times 10^4\ lbf$ **Vertical Reaction**

$V = 0$ **Horizontal Reaction**

$l_P := 0in$ Horiz. Distance P to Point C

$l_v := h_f - 2in$

$l_v = 22 \cdot in$ Vert. Distance from V to point C

NOTE: (-) Sign in lp means that the footing extends inside otherwse it extends outside the culvert. If lp is zero the footing is symetrically loaded.

$P_{soil1} := \gamma_d \cdot h_r \cdot \left(\frac{t_f - t_c}{2} + l_P\right) \cdot ft$ $\quad P_{soil1} = 7.35 \times 10^3\,lbf$ $\quad P_s := \frac{t_f - t_c}{4} + \frac{l_P}{2}$ $\quad P_s = 24.5 \cdot in$

$M_r := -P \cdot l_P + V \cdot l_v - P_{soil1} \cdot P_s$ $\quad M_r = -1.501 \times 10^4 \cdot ft \cdot lbf$ Maximum Moment at Point "C"

-ve lp diagram: Footing extends inside the culvert leg

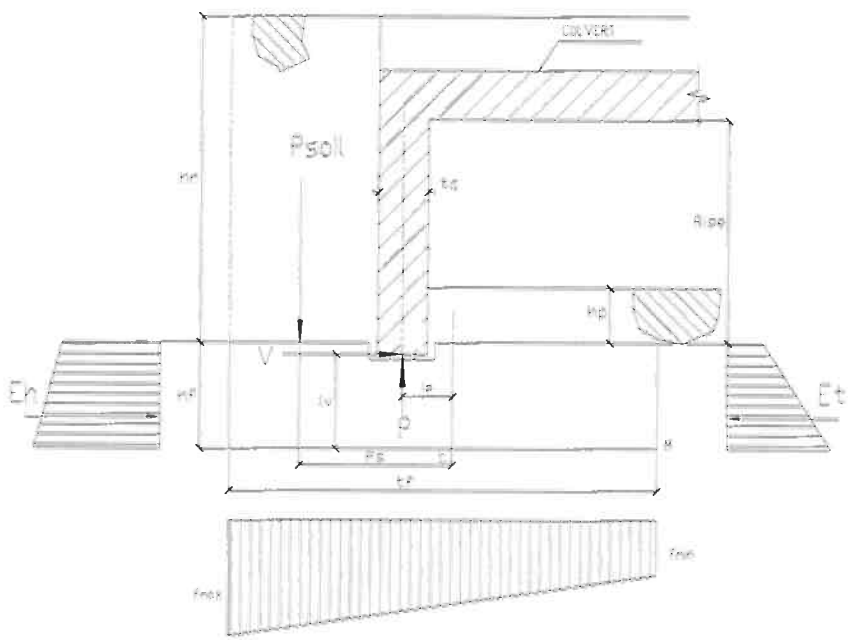

Soil bearing stresses

Section Properties:

$A_f := t_f \cdot 1ft$ $\quad A_f = 9\,ft^2$ Area of footing

$I_f := \frac{1}{12}\left(1ft \cdot t_f^{\,3}\right)$ $\quad I_f = 1 \times 10^6 \cdot in^4$ Moment of inertia of footing

Strength analysis

$P_{conc} := \gamma_c \cdot h_f$ $\quad P_{conc} = 300 \cdot \frac{lbf}{ft^2}$

$e := \frac{M_r}{P}$ $\quad e = -1.18\,ft$ Center of gravity from Point C - Center Line of Foundation; Eccentricity

$B := t_f$ $\quad B = 9\,ft$ $\quad B_p := B - 2e$ $\quad B_p = 11.359\,ft$

$P_d := V_d = 5.2 \times 10^3\,lbf$ $\quad P_l := p - P_d = 7.52 \times 10^3\,lbf$ $\quad \gamma_l := 1.35$ $\quad \gamma_d := 1.25$ $\quad \gamma_s := 1.35$

$q_v := \frac{\gamma_l \cdot P_l + \gamma_d \cdot P_d + \gamma_s \cdot P_{soil1} + P_{conc} \cdot B \cdot 1ft}{B_p \cdot 1ft}$ $\quad q_v = 2.577 \times 10^3 \cdot \frac{lbf}{ft^2}$

$\phi_b := .45$ $\quad q_n := 10000 \frac{lbf}{ft^2}$ ***from geotech report*** $\quad q_R := \phi_b \cdot q_n$ $\quad q_R = 4.5 \times 10^3 \cdot \frac{lbf}{ft^2}$

$\text{if}(q_v \le q_R, \text{"OK"}, \text{"NG"}) = \text{"OK"}$

FOOTING SLAB DESIGN:

$c := 4.5in$ rebar clear distance $\quad d_b := 0.5in$ assumed bar diameter $\quad d := h_f - c - \frac{d_b}{2}$ $\quad d = 19.25 \cdot in$

Factored Load

$span1 := \frac{t_f}{2} - l_P$ $\quad span2 := \frac{t_f}{2} + l_P$

$span := \max(span1, span2)$

$p = 1.272 \times 10^4 lbf$ $\quad P := p \cdot i$ $\quad w_1 := \frac{\gamma_l \cdot P_l + \gamma_d \cdot P_d - P_{soil1} - P_{conc} \cdot 1ft^2}{span}$ $\quad w_1 = 2 \times 10^3 \cdot \frac{lbf}{ft}$

Shear:

$V_u := w_1 \cdot span$ $\quad V_u = 9.002 \times 10^3 lbf$

$h_f = 24 \cdot in$ $\quad c := 2in$ rebar clear distance $\quad d_b := 0.5in$ bar diameter

$f_c := 5 \quad ksi$ $\quad \beta := 2$ $\quad d_{v1} := 0.9 \cdot d$ $\quad d_{v1} = 17.325 \cdot in$ $\quad b_v := 12in$

$d_{v2} := 0.72 \cdot h_f$ $\quad d_{v2} = 17.28 \cdot in$ $\quad d_v := \max(d_{v1}, d_{v2})$

$\phi V_c := .9 \cdot .0316 \cdot \beta \cdot \sqrt{f_c} \cdot ksi \cdot b_v \cdot d_v$ $\quad \boxed{\phi V_c = 2.64 \times 10^4 \cdot lbf}$ $\quad \text{if}(\phi V_c > V_u, \text{"OK"}, \text{"NG"}) = \text{"OK"}$

Moment:

$d = 19.25 \cdot in$ $\quad f_c := 5000 \quad psi$

$M_u := \frac{w_1 \cdot span^2}{2}$ $\quad M_u = 2.025 \times 10^4 \cdot ft \cdot lbf$ moment $\quad A_s := 0.24in^2$

$f_y := 60000$ $\quad a := \frac{A_s \cdot f_y}{.85 \cdot f_c \cdot 12in}$ $\quad a = 0.282 \cdot in$ $\quad f_y := 60000psi$ $\quad$ **Use #4 @ 10 T / B**

$\phi M_n := .95 \cdot A_s \cdot f_y \cdot \left(d - \frac{a}{2}\right)$ $\quad \boxed{\phi M_n = 2.178 \times 10^4 \cdot ft \cdot lbf}$ $\quad \text{if}(\phi M_n > M_u, \text{"OK"}, \text{"NG"}) = \text{"OK"}$

$A_{stemp} := .0018 \cdot 12in \cdot \frac{h_f}{2}$ $\quad A_{stemp} = 0.259 \cdot in^2$ **Use #4 @ 9" T&B (Longitudinal)**

Section 6
STAAD Pro Output: 3' high Pedestal
Incl. BM & SF diagrams

```
****************************************************
*                                                  *
*           STAAD.Pro V8i SELECTseries5            *
*           Version  20.07.10.65                   *
*           Proprietary Program of                 *
*           Bentley Systems, Inc.                  *
*           Date=    APR  1, 2015                  *
*           Time=    10: 0:19                      *
*                                                  *
*      USER ID:                                    *
****************************************************
```

```
     1. STAAD PLANE
INPUT FILE: 3.0'-Pedestal-Fixed.STD
     2. START JOB INFORMATION
     3. ENGINEER DATE 04/01/15
     4. END JOB INFORMATION
     5. INPUT WIDTH 79
     6. UNIT FEET KIP
     7. JOINT COORDINATES
     8. 1 0 0 0; 2 0 3 0
     9. MEMBER INCIDENCES
    10. 1 1 2
    11. DEFINE MATERIAL START
    12. ISOTROPIC CONCRETE
    13. E 453600
    14. POISSON 0.17
    15. DENSITY 0.14999
    16. ALPHA 5.5E-006
    17. DAMP 0.05
    18. END DEFINE MATERIAL
    19. MEMBER PROPERTY
    20. 1 PRIS YD 2.5 ZD 1
    21. CONSTANTS
    22. MATERIAL CONCRETE ALL
    23. SUPPORTS
    24. 1 FIXED
    25. ***
    26. LOAD 1 LOADTYPE NONE  TITLE LOAD CASE 1- DEAD LOAD -COVER 1FT
    27. SELFWEIGHT Y -1
    28. JOINT LOAD
    29. 2 FY -5.2
    30. LOAD 2 LOADTYPE NONE  TITLE -EMAX
    31. MEMBER LOAD
    32. 1 TRAP GX 0.92 0.74
    33. LOAD 3 LOADTYPE NONE  TITLE -EMIN
    34. MEMBER LOAD
    35. 1 TRAP GX 0.46 0.37
    36. LOAD 4 LOADTYPE NONE  TITLE -IPF-WATER INSIDE
    37. MEMBER LOAD
    38. 1 TRAP GX -0.811 -0.187
```

```
39. LOAD 5 LOADTYPE NONE  TITLE LOAD CASE 1- LIVE LOAD
40. JOINT LOAD
41. 2 FY -7.52
42. LOAD COMB 100 COMBINATION LOAD CASE 100
43. 2 1.3
44. LOAD COMB 200 COMBINATION LOAD CASE 200
45. 1 1.3 5 1.75 3 1.0 4 1.75
46. ***
47. LOAD COMB 300 COMBINATION LOAD CASE -CRACK CONTROL-MAX OUTSIDE DEAD
48. 1 1.0 2 1.0
49. LOAD COMB 400 COMBINATION LOAD CASE -CRACK CONTROL-MAX INSIDE DEAD
50. 1 1.0 3 1.0 4 1.0
51. ***
52. LOAD COMB 301 COMBINATION LOAD CASE -CRACK CONTROL-MAX OUTSIDE LIVE
53. 5 1.0 2 1.0
54. LOAD COMB 401 COMBINATION LOAD CASE -CRACK CONTROL-MAX INSIDE LIVE
55. 5 1.0 3 1.0 4 1.0
56. ***
57. PERFORM ANALYSIS
```

```
        P R O B L E M   S T A T I S T I C S
        -----------------------------------

  NUMBER OF JOINTS          2  NUMBER OF MEMBERS       1
  NUMBER OF PLATES          0  NUMBER OF SOLIDS        0
  NUMBER OF SURFACES        0  NUMBER OF SUPPORTS      1


       SOLVER USED IS THE OUT-OF-CORE BASIC SOLVER

  ORIGINAL/FINAL BAND-WIDTH=     1/     1/      3 DOF
TOTAL      PRIMARY LOAD CASES =     5, TOTAL DEGREES OF FREEDOM =       3
TOTAL LOAD COMBINATION  CASES =     6  SO FAR.
  SIZE OF STIFFNESS MATRIX =        0 DOUBLE  KILO-WORDS
  REQRD/AVAIL. DISK SPACE  =     12.0/      0.0 MB
```

```
58. ***PERFORM ANALYSIS PRINT LOAD DATA
59. LOAD LIST 1 TO 4
60. PRINT SUPPORT REACTION ALL
```

SUPPORT REACTIONS -UNIT KIP FEET STRUCTURE TYPE = PLANE

JOINT	LOAD	FORCE-X	FORCE-Y	FORCE-Z	MOM-X	MOM-Y	MOM Z
1	1	0.00	6.32	0.00	0.00	0.00	0.00
	2	-2.49	0.00	0.00	0.00	0.00	3.60
	3	-1.25	0.00	0.00	0.00	0.00	1.80
	4	1.50	0.00	0.00	0.00	0.00	-1.78

********** END OF LATEST ANALYSIS RESULT **********

```
61. ***
62. *** BEAM DISPLACEMENTS AT CL FROM 1.0LL
63. ***LOAD LIST 600 601
64. ***PRINT JOINT DISPLACEMENTS LIST 2
65. ***
66. LOAD LIST 300 400 301 401
67. PRINT SUPPORT REACTION LIST 1
```

SUPPORT REACTIONS -UNIT KIP FEET STRUCTURE TYPE = PLANE

JOINT	LOAD	FORCE-X	FORCE-Y	FORCE-Z	MOM-X	MOM-Y	MOM Z
1	300	-2.49	6.32	0.00	0.00	0.00	3.60
	400	0.25	6.32	0.00	0.00	0.00	0.02
	301	-2.49	7.52	0.00	0.00	0.00	3.60
	401	0.25	7.52	0.00	0.00	0.00	0.02

********** END OF LATEST ANALYSIS RESULT **********

```
68. ***
69. LOAD LIST 100 200
70. PRINT SUPPORT REACTION LIST 1
```

SUPPORT REACTIONS -UNIT KIP FEET STRUCTURE TYPE = PLANE

JOINT	LOAD	FORCE-X	FORCE-Y	FORCE-Z	MOM-X	MOM-Y	MOM Z
1	100	-3.24	0.00	0.00	0.00	0.00	4.68
	200	1.37	21.38	0.00	0.00	0.00	-1.31

********** END OF LATEST ANALYSIS RESULT **********

```
71. ***
72. LOAD LIST 100 200
73. PRINT FORCE ENVELOPE NSECTION 2 LIST 1
```

MEMBER FORCE ENVELOPE

ALL UNITS ARE KIP FEET

MEMB	DISTANCE		FY	LD	MZ	LD	FZ	LD	MY	LD
1	0.00	MAX	3.24	100	4.68	100	0.00	200	0.00	200
		MIN	-1.37	200	-1.31	200	0.00	200	0.00	200
	0.25	MAX	2.94	100	3.91	100	0.00	200	0.00	200
		MIN	-1.15	200	-1.00	200	0.00	200	0.00	200
	0.50	MAX	2.65	100	3.21	100	0.00	200	0.00	200
		MIN	-0.94	200	-0.74	200	0.00	200	0.00	200
	0.75	MAX	2.36	100	2.58	100	0.00	200	0.00	200
		MIN	-0.75	200	-0.53	200	0.00	200	0.00	200
	1.00	MAX	2.08	100	2.03	100	0.00	200	0.00	200
		MIN	-0.58	200	-0.36	200	0.00	200	0.00	200
	1.25	MAX	1.80	100	1.54	100	0.00	200	0.00	200
		MIN	-0.44	200	-0.23	200	0.00	200	0.00	200
	1.50	MAX	1.53	100	1.13	100	0.00	200	0.00	200
		MIN	-0.31	200	-0.14	200	0.00	200	0.00	200
	1.75	MAX	1.26	100	0.78	100	0.00	200	0.00	200
		MIN	-0.21	200	-0.08	200	0.00	200	0.00	200
	2.00	MAX	1.00	100	0.49	100	0.00	200	0.00	200
		MIN	-0.12	200	-0.03	200	0.00	200	0.00	200
	2.25	MAX	0.74	100	0.28	100	0.00	200	0.00	200
		MIN	-0.06	200	-0.01	200	0.00	200	0.00	200
	2.50	MAX	0.49	100	0.12	100	0.00	200	0.00	200
		MIN	-0.02	200	0.00	200	0.00	200	0.00	200
	2.75	MAX	0.24	100	0.03	100	0.00	200	0.00	200
		MIN	0.00	200	0.00	200	0.00	200	0.00	200
	3.00	MAX	0.00	200	0.00	200	0.00	200	0.00	200
		MIN	0.00	200	0.00	200	0.00	200	0.00	200

MAX/MIN FORCE VALUES FOR MEMB 1, AMONGST ALL SECT LOCATIONS

	FY/ FZ	DIST DIST	LD LD	MZ/ MY	DIST DIST	LD LD	FX	DIST	LD
MAX.	3.24	0.00	100	4.68	0.00	100			
	0.00	0.00	100	0.00	0.00	100	21.38 C	0.00	200
MIN.	-1.37	0.00	200	-1.31	0.00	200			
	0.00	3.00	200	0.00	3.00	200	0.00	3.00	100

********** END OF FORCE ENVELOPE FROM INTERNAL STORAGE **********

74. LOAD LIST 300 400

75. PRINT FORCE ENVELOPE NSECTION 2 LIST 1

MEMBER FORCE ENVELOPE

ALL UNITS ARE KIP FEET

MEMB	DISTANCE		FY	LD	MZ	LD	FZ	LD	MY	LD
1	0.00	MAX	2.49	300	3.60	300	0.00	400	0.00	400
		MIN	-0.25	400	0.02	400	0.00	400	0.00	400
	0.25	MAX	2.26	300	3.01	300	0.00	400	0.00	400
		MIN	-0.17	400	0.07	400	0.00	400	0.00	400
	0.50	MAX	2.04	300	2.47	300	0.00	400	0.00	400
		MIN	-0.10	400	0.11	400	0.00	400	0.00	400
	0.75	MAX	1.82	300	1.99	300	0.00	400	0.00	400
		MIN	-0.04	400	0.13	400	0.00	400	0.00	400
	1.00	MAX	1.60	300	1.56	300	0.00	400	0.00	400
		MIN	0.01	400	0.13	400	0.00	400	0.00	400
	1.25	MAX	1.39	300	1.19	300	0.00	400	0.00	400
		MIN	0.05	400	0.12	400	0.00	400	0.00	400
	1.50	MAX	1.18	300	0.87	300	0.00	400	0.00	400
		MIN	0.07	400	0.11	400	0.00	400	0.00	400
	1.75	MAX	0.97	300	0.60	300	0.00	400	0.00	400
		MIN	0.09	400	0.09	400	0.00	400	0.00	400
	2.00	MAX	0.77	300	0.38	300	0.00	400	0.00	400
		MIN	0.09	400	0.06	400	0.00	400	0.00	400
	2.25	MAX	0.57	300	0.21	300	0.00	400	0.00	400
		MIN	0.09	400	0.04	400	0.00	400	0.00	400
	2.50	MAX	0.38	300	0.09	300	0.00	400	0.00	400
		MIN	0.07	400	0.02	400	0.00	400	0.00	400
	2.75	MAX	0.19	300	0.02	300	0.00	400	0.00	400
		MIN	0.04	400	0.01	400	0.00	400	0.00	400
	3.00	MAX	0.00	400	0.00	400	0.00	400	0.00	400
		MIN	0.00	400	0.00	400	0.00	400	0.00	400

MAX/MIN FORCE VALUES FOR MEMB 1, AMONGST ALL SECT LOCATIONS

	FY/ FZ	DIST DIST	LD LD	MZ/ MY	DIST DIST	LD LD	FX	DIST	LD
MAX.	2.49	0.00	300	3.60	0.00	300			
	0.00	0.00	300	0.00	0.00	300	6.32 C	0.00	300
MIN.	-0.25	0.00	400	0.00	3.00	400			
	0.00	3.00	400	0.00	3.00	400	5.20 C	3.00	400

********** END OF FORCE ENVELOPE FROM INTERNAL STORAGE **********

76. FINISH

Software licensed to	Job No	Sheet No 1	Rev
	Part		
Job Title	Ref		
	By	Date 04/01/15	Chd
Client	File 3.0'-Pedestal-Fixed.std	Date/Time 01-Apr-2015 09:59	

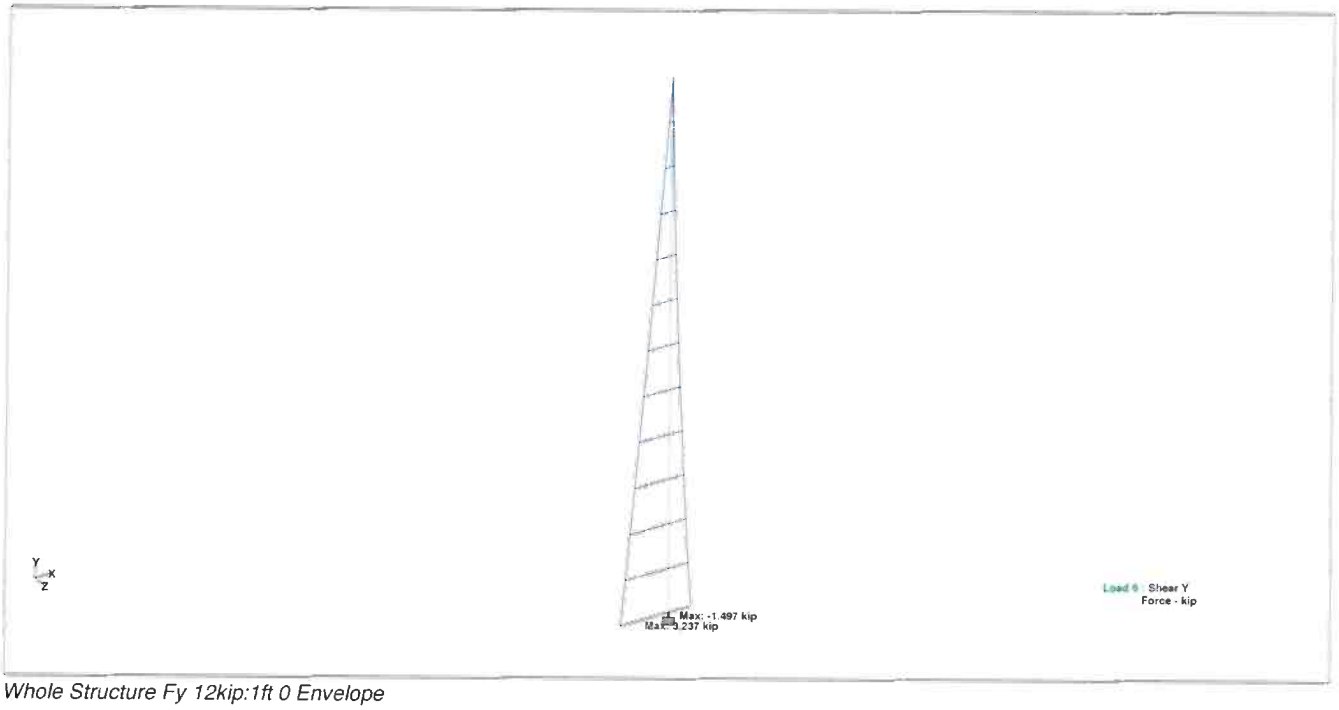

Whole Structure Fy 12kip:1ft 0 Envelope

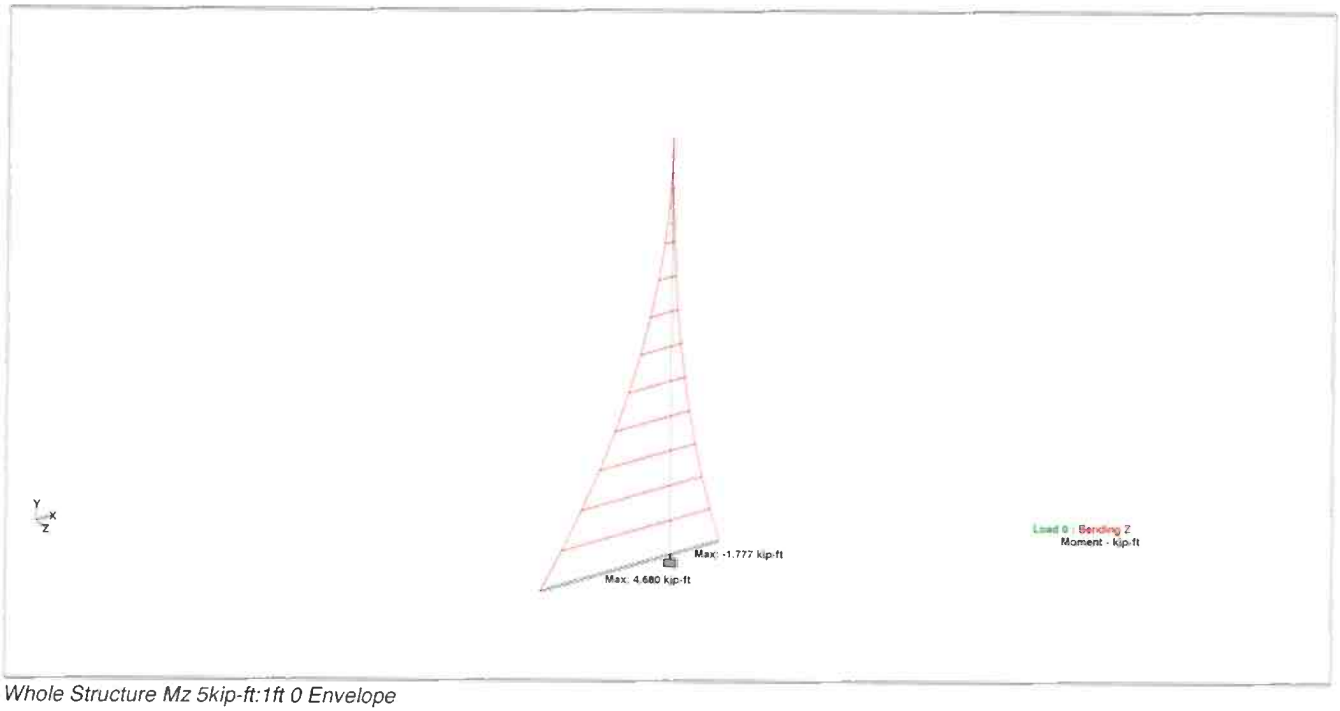

Whole Structure Mz 5kip-ft:1ft 0 Envelope

April 21, 2015

Attn: Mr. Cody Marsh
G W Tatro Constrcution Inc
Jct Rtes 15 & 108
Jeffersonville, VT

RE: VT/DOT Bridge Replacement- Roadway improvement- C22312

For your records, please note that we would like to use the following concrete mix design (self-consolidating) in manufacturing.

Proportion indicated is per cubic yard basis:

Cement (Type III) Dragon	527#
Fly Ash	225#
½" Crushed Stone (Dracut)	1,522#
Sand (Decato)	1,360#
Water	275#
Glennium 7710	85 oz
MBAE 90	7 oz
Maximum Slump Spread	23" to 26"
Entrained Air	6%±1%
Concrete Strength (28 days)	5,000 psi
Water/Cement Ratio	0.36 max.

Please call me if you have any questions.

Very truly yours,

Concrete Systems, Inc.
Mr. Kanti Patel
Quality Control Manager

MX-FA5000SC30

9 Commercial Street Hudson, New Hampshire 03051 Phone (603) 889-4163
Fax Number: Precast Sales (603) 889-0039
Fax Number: Manhole Design and Engineering (603) 598-1344

> BOLT POCKET FORMER

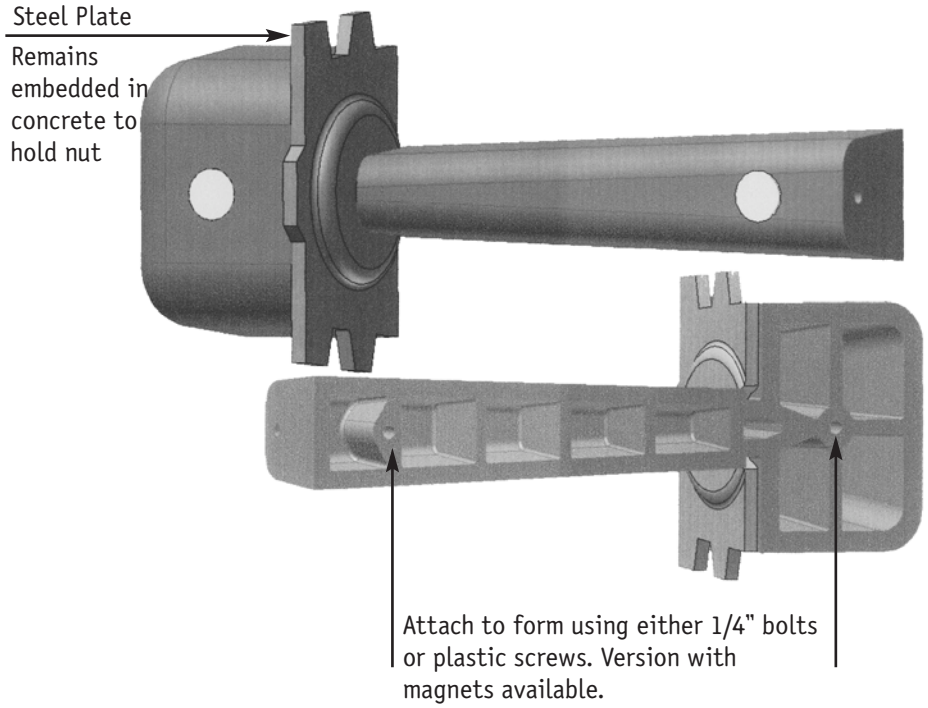

Introducing our Bolt Pocket Former – the ideal solution for tying together sections of box culvert or precast walls. This dual purpose forming device creates both a groove through the joint and a pocket for the bolt. The steel plate that remains embedded in the concrete accepts up to 1" rod. Molded out of a specially formulated urethane, our bolt pocket former will last for at least 50 pours when properly maintained. Call for more details and pricing information.

Pennsylvania Insert Corporation

phone: 800.220.4857 sales@pennsylvaniainsert.com fax: 610.948.9750

> serving concrete producers for over 30 years

BOLT POCKET FORMER

The simple forming solution for tying together sections of box culvert or precast walls.

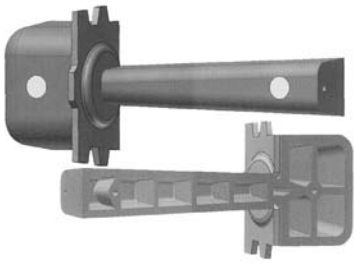

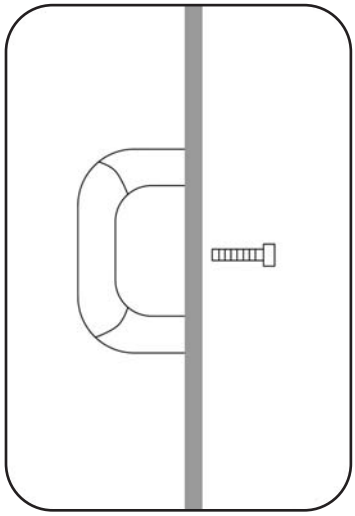

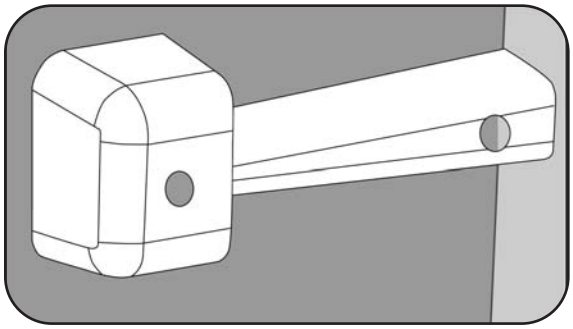

1. Attach Bolt Pocket Former to form using either 1/4” bolts or plastic screws for non collapsing forms. The inserts are replaceable should the threads show signs of wear after numerous uses.

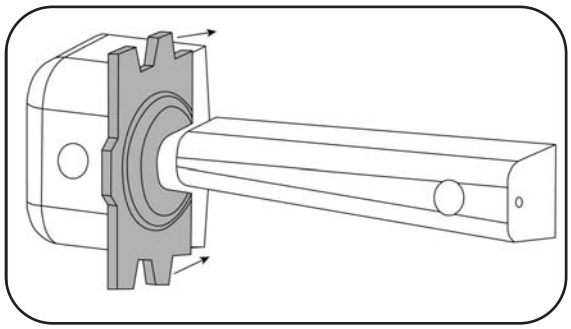

2. Slide steel plate onto Bolt Pocket Former. Pour.

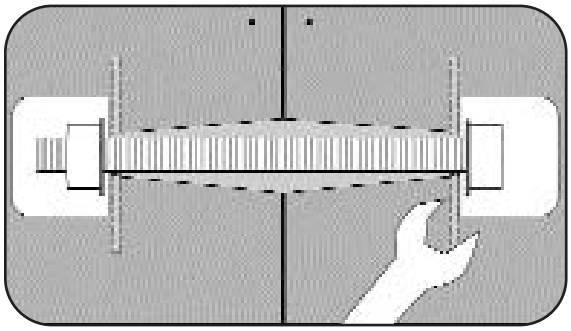

3. After stripping form, slide Bolt Pocket Former out using pliers. Steel plate remains embedded in concrete. A groove through the joint and bolt pocket are formed. For field installation*, the steel plate accepts up to 1” rod.
*We provide a field installation kit consisting of rod, 2 nuts, and 2 washers for an additional charge.

Pennsylvania Insert Corporation

FOR INFO. CALL 1-800-220-4857
or sales@pennsylvaniainsert.com

Fax to:	Customer		Approved/Notes	PA Insert Corp
Fax#	Project			PO Box 199 Spring City PA 19475 tel: 610-948-9688 fax: 610-948-9750
From	Job#	Ship Date		
Date	PA Insert Quote/Order#	Page _____of _____		email: sales@pennsylvaniainsert.com web: www.pennsylvaniainsert.com

BOLT POCKET FORMER (for up to 1" bolt)

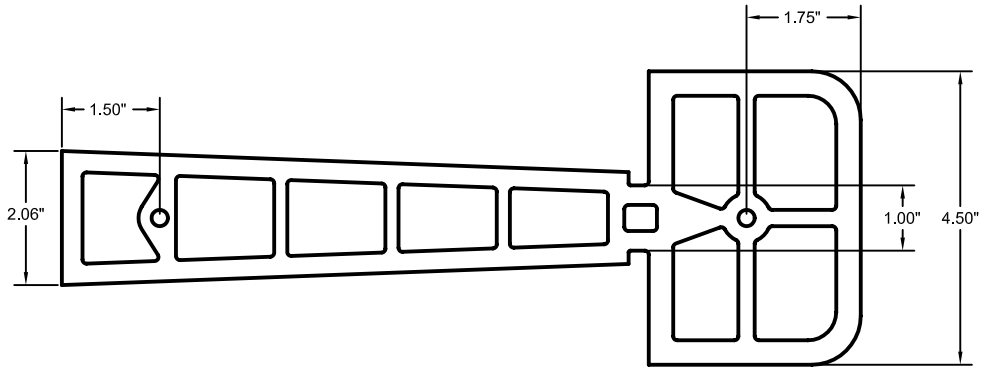

- Made from durable Urethane for reusability
- Ribbed construction increases strength
- *Replacable 1/4" Threaded Inserts
- **1/4" Galvanized Steel Plate Standard
- Available with magnets to attach to form

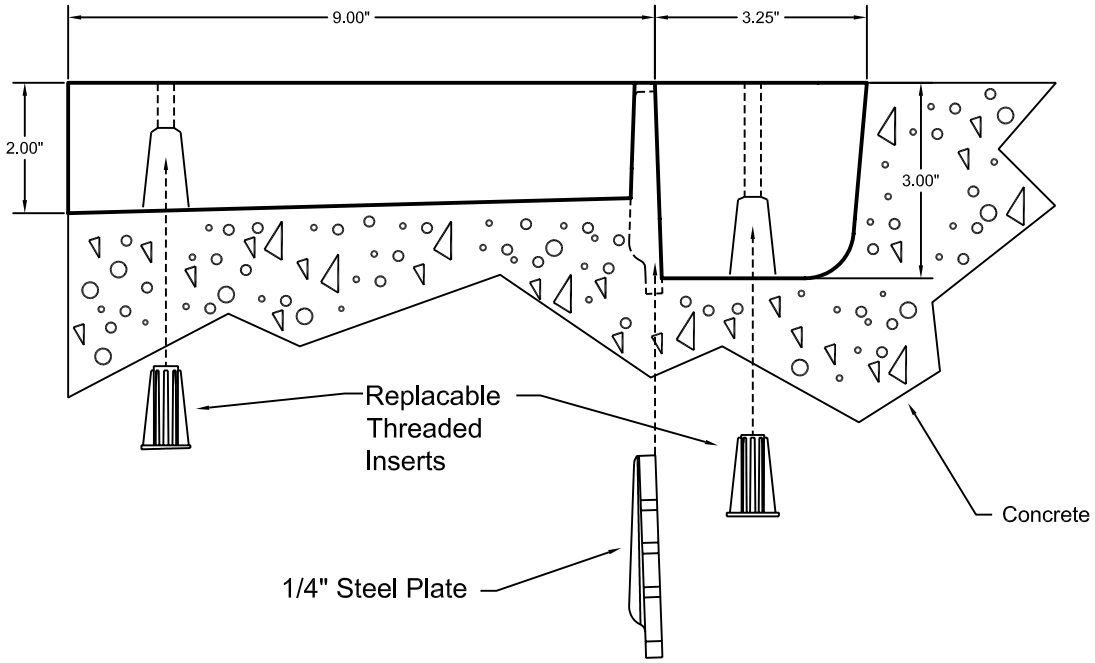

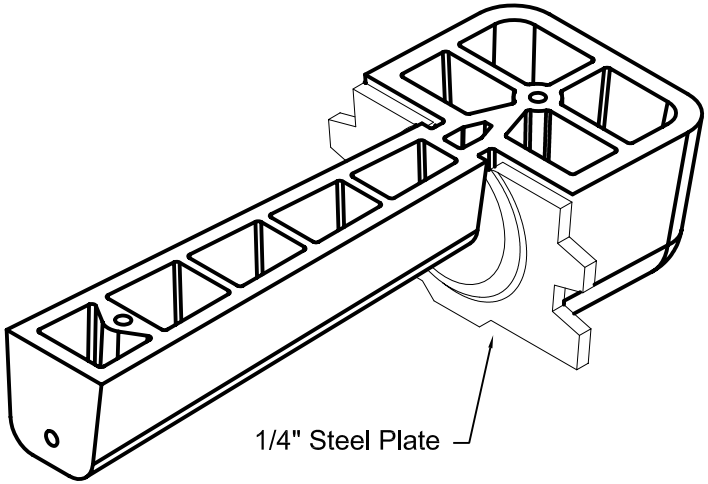

*Threaded Inserts sold separately (Part Number 1200)

**Steel Plate stays in concrete, sold separately (Part Number 4024)

06/03/04

Fax to:	Customer		Approved/Notes	PA Insert Corp
Fax#	Project			
From	Job#	Ship Date		
Date	PA Insert Quote/Order#	Page _____of _____		

PO Box 199
Spring City PA 19475
tel: 610-948-9688
fax: 610-948-9750

email: sales@pennsylvaniainsert.com
web: www.pennsylvaniainsert.com

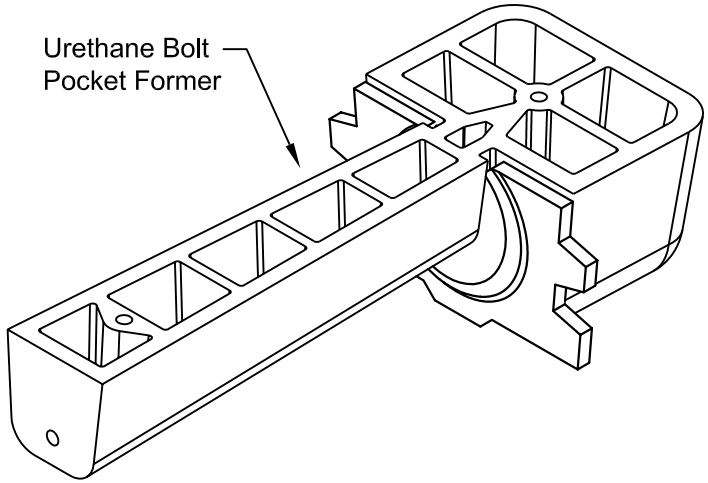

BOLT POCKET PLATE (use with bolt pocket former)

- *1/4" Galvanized Steel Plate Standard, distributes bolt load
- Teeth anchor plate securely in concrete
- Pressed center keeps bolt in position
- **Fits securely into reusable bolt pocket former

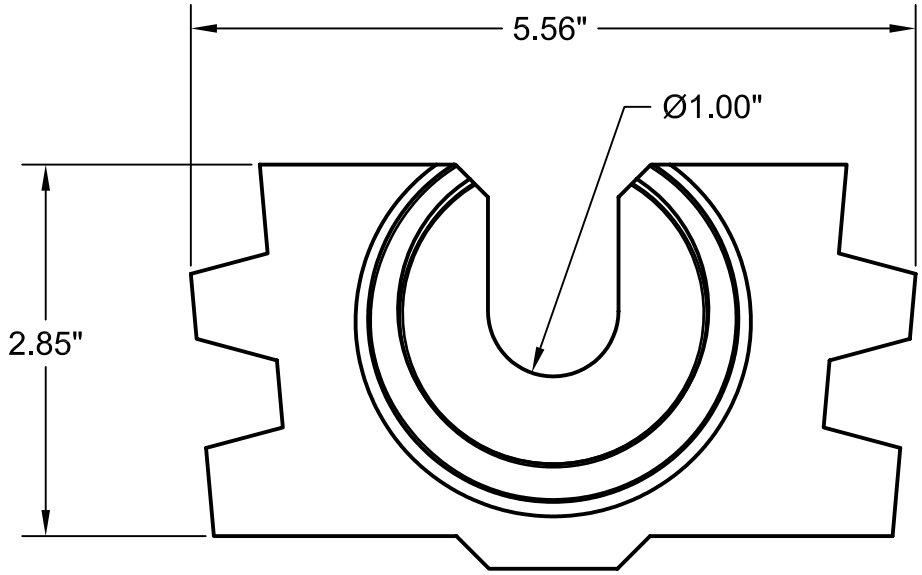

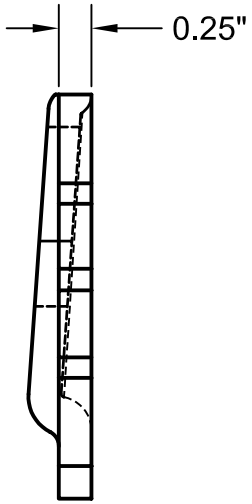

*Plain Steel or Stainless Steel Optional
**Urethane Bolt Pocket Former sold separately (part number 4023)

06/03/04

CELLULAR JOINT FILLER

CLOSED-CELL GASKET MATERIAL

What It Is

CLOSED CELL JOINT FILLER is a flexible, compressible material that easily fills difficult joints in concrete pipes and structures. Whether glued onto the joint or placed between the structures, it quickly conforms to the joint profile. Closed Cell Joint Filler can be supplied as cut and spliced gaskets, or as bulk material for field fabrication of gaskets. It has excellent compressibility and is resistant to weather, ozone, acids, and alkalis.

1" x 1"
25 FT. ROLLS

1" x 2"
25 FT. ROLLS

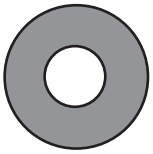

ROUND 3/8" WALL
250 FT. ROLLS

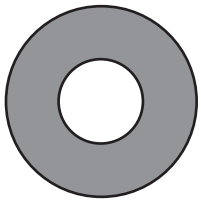

ROUND 1/2" WALL
250 FT. ROLLS

Why It's Better

- Works with Round, Elliptical & Arch Pipe
- Works with Box Culverts and Manholes
- Available in 25' or 250' rolls, or by the foot
- Also available as cut and spliced gaskets
- Manufactured of high-quality synthetic rubber
- Easily compresses to fill irregular joints
- Clean and easy to use.
- May be used in place of trowelable sealants
- Easily cut and spliced in the field or in your yard
- May be glued directly to the joint

How It Performs

CLOSED CELL JOINT FILLER MATERIAL *meets or exceeds all requirements of:*

ASTM D-1056 - *Flexible Cellular Materials - Sponge or Expanded Rubber*

Virginia and New York DOT approved.
Complies with NYDOT Std. 706.17

RECTANGULAR CROSS-SECTIONS are made from a Neoprene/EPDM Blend.

CIRCULAR TUBING CROSS-SECTIONS are made from a Nitrile/PVC blend.

Typical Physical Properties

Color	Black
Compression Deflection (psi)	5 - 9
Tensile Strength (psi Min.)	30
Elongation (%Min.)	125
Resilience - Bashore (% rebound Average) (1/2" thickness @ 72ºF)	25 - 40
Shore 00 Durometer	45 - 60
Density (pcf) average	5.5 - 7.5
Water Absorption by Weight (Max.)	10%
Temperature Range (F)	
Low (Flex without cracking)	-70
High (Continuous)	150
High (Intermittent)	200
Heat Aging (7 days @ 158ºF)	
Lineal Shrinkage (Max.)	10%

Press-Seal believes all information is accurate as of its publication date. Information, specifications, and prices are all subject to change without notice. Press-Seal is not responsible for any inadvertent errors. Copyright 2011.

PRESS-SEAL GASKET CORPORATION
Protecting Our Planet's Clean Water Supply
Press-Seal Gasket is an ISO 9001:2008 and ISO 14001:2004 Registered Company

800-348-7325 Fax (260) 436-1908
email: sales @press-seal.com
web: www.press-seal.com

Made in USA

DAYTON/RICHMOND™ CONCRETE ACCESSORIES

Dowel Bar Splicer System

D-101-A Straight Dowel Bar Splicer DB-SAE, D-102-A 90° Hooked Dowel Bar Splicer, D-103-A 180° Hooked Dowel Bar Splicer, D-104-A Double-Ended Dowel Bar Splicer

The Dayton/Richmond Dowel Bar Splicer is a one-piece unit, integrally forged from ASTM A615 grade 60 deformed rebar material. The splicers are available in #4 through #11 rebar sizes to be used in conjunction with the corresponding size dowel-in to accomplish a mechanical splice designed to achieve 160% of specified yield (full mechanical ultimate).

The splicer can be furnished straight (D-101-A) cut to length, 90° and 180° hooked (D-102-A and D-103-A) and double-ended (D-104-A) in plain or epoxy coated finish. The splicer can also be special-ordered with a reduced diameter washer flange or with the washer flange clipped (in more than one direction, if required) to provide adequate concrete cover, or to avoid interference.

The D-104-A Double-Ended Dowel Bar Splicer is used to establish a direct load path through a concrete section, thus avoiding multiple hooked rebar and eliminating rebar congestion. The double-ended unit can be configured in a “U” shape for special applications.

Bar Size	Thread Size	A	B	C	D	E	Flange Diameter	Minimum P_{ult} Range = 95% F_u Actual or 160% F_y Specified*
#4 [#13]	5/8"–11 UNC	1-1/8"	1/8"	11/16"	55/64"	1"	1-7/8"	19,200 lbs.
#5 [#16]	3/4"–10 UNC	1-9/16"	1/8"	13/16"	1-3/64"	1-1/8"	2-1/16"	29,760 lbs.
#6 [#19]	7/8"–9 UNC	1-11/16"	1/8"	15/16"	1-15/64"	1-1/4"	2-1/4"	42,400 lbs.
#7 [#22]	1"–8 UNC	1-27/32"	1/8"	1-1/16"	1-27/64"	1-3/8"	2-7/16"	57,600 lbs.
#8 [#25]	1-1/8"–8 UN	2-1/16"	1/8"	1-3/16"	1-19/32"	1-1/2"	2-5/8"	75,840 lbs.
#9 [#29]	1-1/4"–8 UN	2-3/16"	1/8"	1-5/16"	1-25/32"	1-5/8"	2-13/16"	96,000 lbs.
#10 [#32]	1-7/16"–8 UN	2-7/16"	1/8"	1-1/2"	2"	1-13/16"	3"	121,920 lbs.
#11 [#36]	1-9/16–8 UN	2-9/16"	1/8"	1-5/8"	2-7/32"	1-15/16"	3-1/4"	149,760 lbs.

*Loads shown based on 160% f_y specified

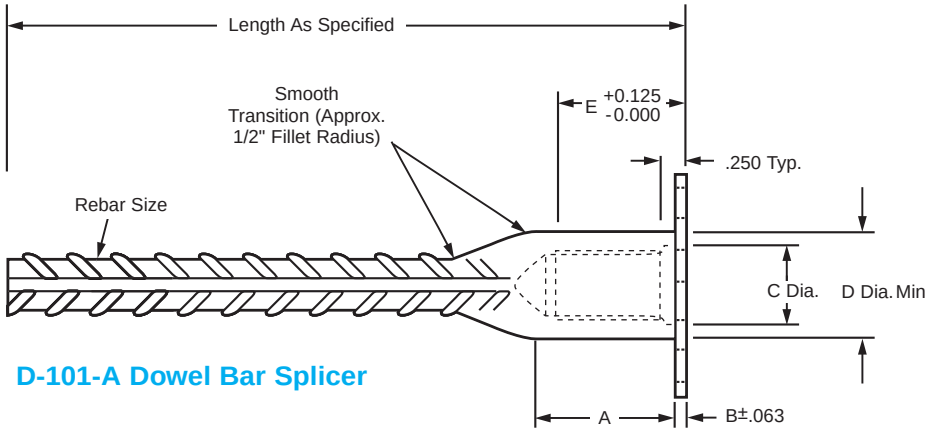

D-101-A Dowel Bar Splicer

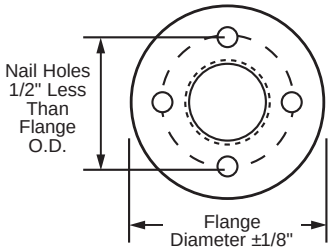

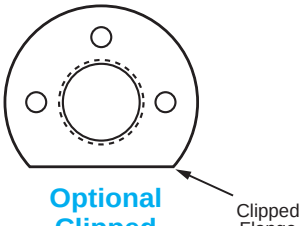

Optional Clipped Flange

Note: No. 4, 5 and 6 splicers, 18", 24" and 36" long will usually have a stamped metal plug to protect threads; all other sizes will have a plastic cap plug.

DAYTON/RICHMOND™ CONCRETE ACCESSORIES

Dowel Bar Splicer System

Specified or Required Dowel Bar				Recommended Dowel Bar Splicer and Dowel-In						
Bar Size	Grade 60 Rebar Loads (lbs.)			System Thread Size*	DB-SAE Bar Size	Dowel-In Bar Size	System Stress Area (min.)	Completed Splice (lbs.)		
	P_y	1.25 P_y	P_{ult}					P_y	1.25 P_y	Minimum P_{ult} Range = 95% F_u Actual or 160% F_y Specified**
#4 [#13]	12,000	15,000	18,000	5/8"-11	#4	#4	.20	12,000	15,000	19,200
#5 [#16]	18,600	23,250	27,900	3/4"-10	#5	#5	.31	18,600	23,250	29,760
#6 [#19]	26,400	33,000	39,600	7/8"-9	#6	#6	.44	26,400	33,000	42,400
#7 [#22]	36,000	45,000	54,000	1"-8	#7	#7	.60	36,000	45,000	57,600
#8 [#25]	47,400	59,250	71,100	1-1/8"-8	#8	#8	.79	47,400	59,250	75,840
#9 [#29]	60,000	75,000	90,000	1-1/4"-8	#9	#9	1.00	60,000	75,000	96,000
#10 [#32]	76,200	95,250	114,000	1-7/16"-8	#10	#10	1.27	76,200	95,250	121,920
#11 [#36]	93,600	117,000	140,400	1-9/16"-8	#11	#11	1.56	93,600	117,000	149,760

P_y=Minimum Yield Strength of bar.
*5/8", 3/4", 7/8" and 1" sizes have UNC Threads. 1-1/8" and larger sizes are equipped with UN Threads.
**Loads shown based on 160% f_y specified.

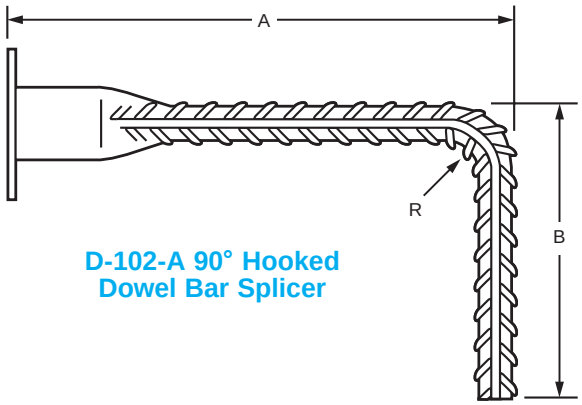

D-102-A 90° Hooked Dowel Bar Splicer

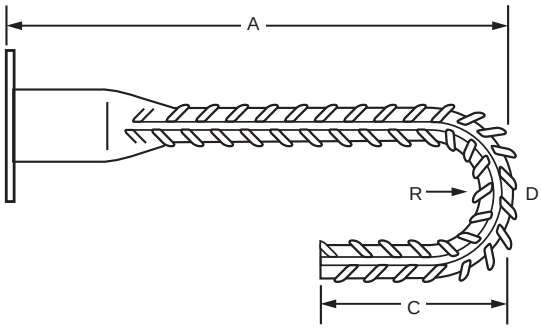

D-103-A 180° Hooked Dowel Bar Splicer

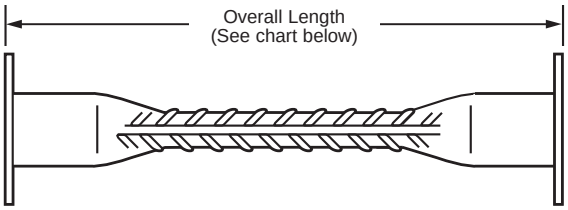

D-104-A Double-Ended Dowel Bar Splicer

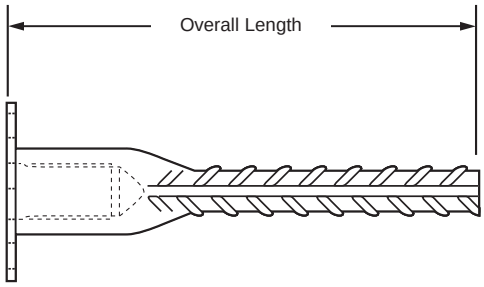

D-101-A Dowel Bar Splicer

D-104-A Double-Ended Min. Lengths		Tolerance Overall Length
#4 [#13]	12" O.A.	+0 - 3/8"
#5 [#16]	12" O.A.	+0 - 3/8"
#6 [#19]	14" O.A.	+0 - 1/2"
#7 [#22]	16" O.A.	+0 - 5/8"
#8 [#25]	16" O.A.	+0 - 3/4"
#9 [#29]	16" O.A.	+0 - 1"
#10 [#32]	16" O.A.	+0 - 1"
#11 [#36]	16" O.A.	+0 - 1"

See D-108 Headed Dowel Bar Splicer on page 17.

To Order:
Specify: (1) quantity, (2) name, (3) bar size (should be equivalent to the rebar being substituted for on the structural drawings), (4) dimensions required.

Example:
600, D-101-A Dowel Bar Splicers, #5 rebar, 36" long.

DAYTON/RICHMOND™ CONCRETE ACCESSORIES

Dowel Bar Splicer System

D-101 Dowel-in, D-102 90° Hooked Dowel-in, D-103 180° Hooked Dowel-in, D-104 Double-Ended Dowel-in

The Dayton/Richmond Dowel-In is available Straight (D-101), 90° and 180° Hooked (D-102 and D-103) and Double-Ended (D-104). Each is manufactured from grade 60 deformed rebar material and is available in rebar sizes #4 through #11 in plain or epoxy coated finish. The threaded end of the Dowel-In is enlarged by forging, before threading, to ensure that the cross-sectional area of the bar is not reduced by the threading operation. This design feature assures full ultimate strength of the rebar. Dowel-ins are configured to facilitate easy installation and can be easily assembled by hand. On larger projects, such as highway paving, a centrifugal chuck on an electric or air-powered drill motor can be employed to speed installation. See the D-49 Magna Jaw on Page 65.

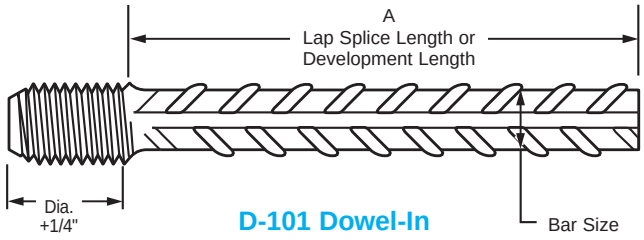

D-101 Dowel-In

To Order:
Specify: (1) quantity, (2) name, (3) bar size (should be equivalent to the rebar being substituted for on the structural drawings), (4) dimensions required (see below).

Example:
600, D-102 90° Hooked Dowel-Ins, #5 rebar, A=14", B=8"

Specified or Required Dowel Bar				Recommended Dowel Bar Splicer and Dowel-In						
Bar Size	Grade 60 Rebar Loads (lbs.)			System Thread Size*	DB-SAE Bar Size	Dowel-In Bar Size	System Stress Area (min.)	Completed Splice (lbs.)		
	P_y	1.25 P_y	P_{ult}					P_y	1.25 P_y	Minimum P_{ult} Range = 95% F_u Actual or 160% F_y Specified**
#4 [#13]	12,000	15,000	18,000	5/8"-11	#4	#4	.20	12,000	15,000	19,200
#5 [#16]	18,600	23,250	27,900	3/4"-10	#5	#5	.31	18,600	23,250	29,760
#6 [#19]	26,400	33,000	39,600	7/8"-9	#6	#6	.44	26,400	33,000	42,400
#7 [#22]	36,000	45,000	54,000	1"-8	#7	#7	.60	36,000	45,000	57,600
#8 [#25]	47,400	59,250	71,100	1-1/8"-8	#8	#8	.79	47,400	59,250	75,840
#9 [#29]	60,000	75,000	90,000	1-1/4"-8	#9	#9	1.00	60,000	75,000	96,000
#10 [#32]	76,200	95,250	114,000	1-7/16"-8	#10	#10	1.27	76,200	95,250	121,920
#11 [#36]	93,600	117,000	140,400	1-9/16"-8	#11	#11	1.56	93,600	117,000	149,760

P_y=Minimum Yield Strength of bar.
*5/8", 3/4", 7/8" and 1" sizes have UNC Threads. 1-1/8" and larger sizes are equipped with UN Threads.
**Loads shown based on 160% f_y specified.

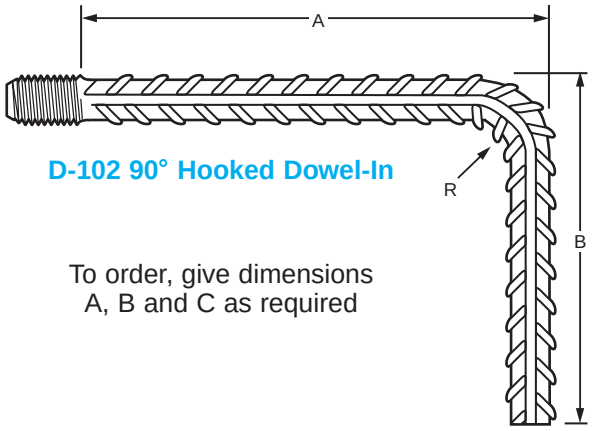

D-102 90° Hooked Dowel-In

To order, give dimensions A, B and C as required

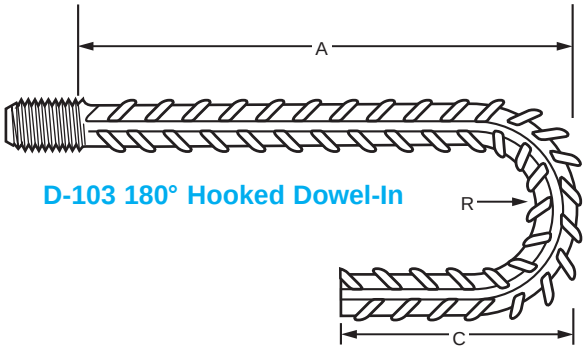

D-103 180° Hooked Dowel-In

See D-108 Headed Dowel-In on page 17.

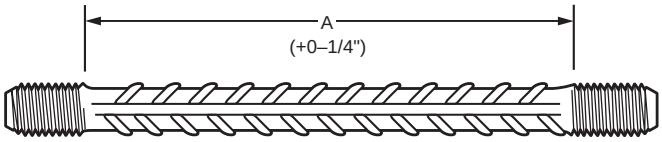

D-104 Double-Ended Dowel-In

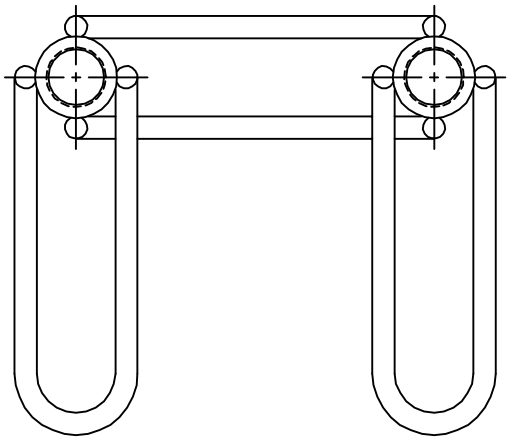

DEPTH	BENT LEG	PRODUCT CODE
8"	6"	114670
6"	4"	114320
4"	2"	124792

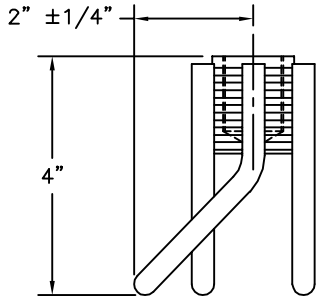

124792

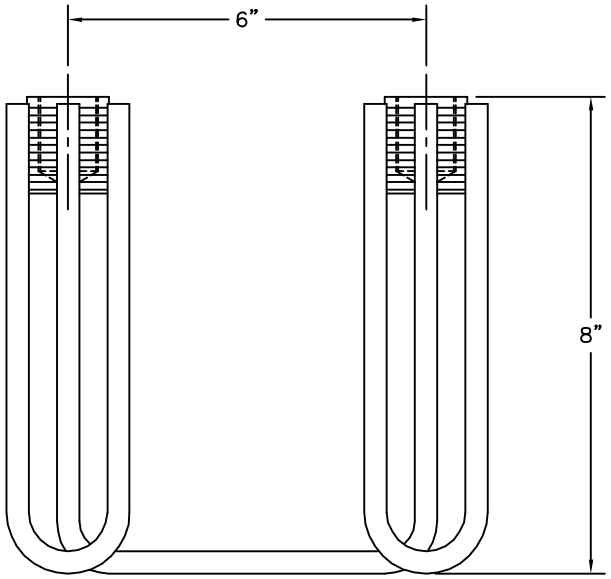

114670

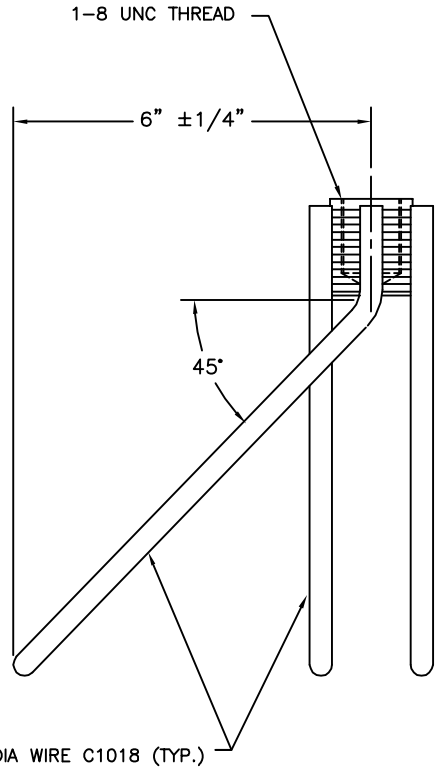

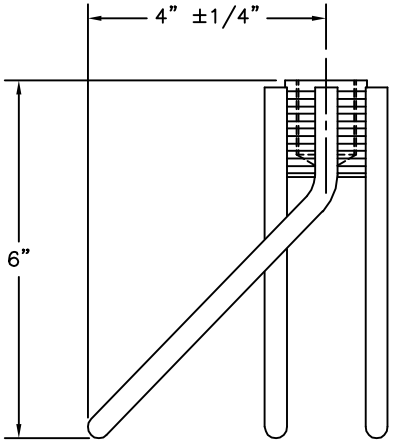

114320

Copyright Dayton Superior Corporation 2001. This drawing is the exclusive property of Dayton Superior Corporation and may not be altered or reproduced without express prior written permission.

NOTES:
1) CENTERLINE OF FERRULES MUST BE PARALLEL TO EACH OTHER

DAYTON SUPERIOR®
721 RICHARD ST. – MIAMISBURG, OH 45342
PHONE NO. (937) 866-0711 – FAX NO. (937) 866-9768

TITLE:	F-41 WINGWALL INSERT TWO BOLT – 1"-8 UNC THREAD		
DRAWN BY: NAME	CHECKED BY:	DWG. NO. DWG.NO.	REV. REV

PDF created with pdfFactory trial version www.pdffactory.com

P-93 Fleet-Lift L-Anchor

The Dayton Superior P-93 Fleet-Lift L-Anchor is a very efficient anchor. This anchor is used for both stripping and erection carrying tension and/or shear loads (except for edge shear in thin panels). The L-Anchor produces exceptionally high pullout strength for its size, due to its foot design.

The L-Anchor can be placed on the face, back, or thicker panel edge allowing for back-stripping and their rotation from horizontal to vertical.

The P-93 anchor is available in plain or hot-dipped galvanized finish. This anchor requires the use of the 2/5-ton range ring clutch and the 2/3-ton load range recess plug.

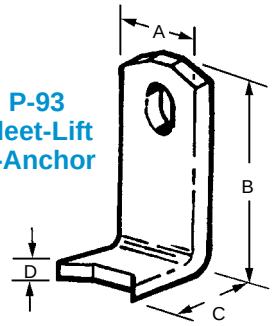

P-93 Fleet-Lift L-Anchor

To Order:
Specify: (1) quantity, (2) name, (3) product code, (4) finish.

Example:
200, P-93 Fleet-Lift L-Anchor, FL050, hot-dipped finish.

P-93 Fleet-Lift L-Anchor (ton x length)	Product Code	Precast Concrete Panel Thickness	Minimum Edge or Corner Distance	Shear Safe Working Load	Tension Safe Working Load	A	B	C	D
1-ton x 4" long	FL050	5" Min.	12"	2,000 lbs.	2,000 lbs.	1-1/4"	4"	1-7/16"	3/16"

Notes:
1) Safe Working Load provides an approximate factor of safety of 4 to 1 in 3,500 psi normal weight concrete.
2) Anchor is not designed for use in thin edge shear conditions.
3) Anchor must use FL051 (P99) Reusable Recess Plug

P-94 Fleet-Lift T-Anchor

The P-94 Fleet-Lift T-Anchor is a versatile anchor available in many sizes and lengths. Its high pullout strength allows it to be used for back-stripping and erection. T-Anchors can be placed on the face, back or edge of panels allowing for back-stripping and rotation from horizontal to vertical.

P-94 anchors are available in plain or hot-dipped galvanized finish.

To Order:
Specify: (1) quantity, (2) name, (3) product code, (4) finish.

Example:
200, P-94 Fleet-Lift T-Anchors, FL 850, hot-dipped galvanized.

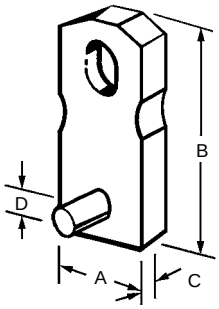

P-94 Fleet-Lift T-Anchor 4-ton

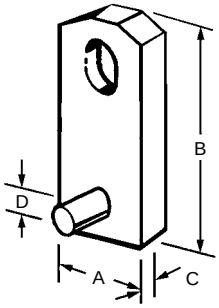

P-94 Fleet-Lift T-Anchor 2, 6 and 8-ton

P-94 Fleet-Lift L-Anchor (ton x length)	Product Code	Precast Concrete Minimun Panel Thickness	Minimum Edge or Corner Distance	Shear Safe Working Load	Tension Safe Working Load	A	B	C	D
2-ton x 4" long	FL110	4-3/4"	8"	4,000 lbs.	4,000 lbs.	1-1/4"	4"	3/8"	1/2"
2-ton x 5-1/2" long	FL059	5-7/8"	11"	4,000 lbs.	4,000 lbs.	1-1/4"	5-1/2"	3/8"	1/2"
4-ton x 4-1/4" long	FL848	4-5/8"	8-1/2"	5,500 lbs.	5,500 lbs.	1-1/2"	4-1/4"	5/8"	1/2"
4-ton x 4-3/4" long	FL849	5-1/8"	9-1/2"	7,100 lbs.	7,100 lbs.	1-1/2"	4-3/4"	5/8"	1/2"
4-ton x 5-1/4" long	FL850	5-5/8"	10-1/2"	8,000 lbs.	8,000 lbs.	1-1/2"	5-1/4"	5/8"	1/2"
4-ton x 5-3/4" long	FL851	6-1/8"	11-1/2"	8,000 lbs.	8,000 lbs.	1-1/2"	5-3/4"	5/8"	1/2"
4-ton x 6-1/4" long	FL852	6-5/8"	12-1/2"	8,000 lbs.	8,000 lbs.	1-1/2"	6-1/4"	5/8"	1/2"
4-ton x 6-3/4" long	FL853	7-1/8"	13-1/2"	8,000 lbs.	8,000 lbs.	1-1/2"	6-3/4"	5/8"	1/2"
4-ton x 7-1/4" long	FL854	7-5/8"	14-1/2"	8,000 lbs.	8,000 lbs.	1-1/2"	7-1/4"	5/8"	1/2"
4-ton x 7-3/4" long	FL855	8-1/8"	15-1/2"	8,000 lbs.	8,000 lbs.	1-1/2"	7-3/4"	5/8"	1/2"
6-ton x 11-1/8" long	FL319*	11-1/2"	23"	12,000 lbs.	12,000 lbs.	2-1/2"	11-1/8"	5/8"	3/4"
8-ton x 6-1/8" long	FL055	6-1/8"	12-1/4"	7,950 lbs.	7,950 lbs.	2-1/2"	6-1/8"	3/4"	3/4"
8-ton x 11-1/8" long	FL119	11-1/2"	23"	16,000 lbs.	16,000 lbs.	2-1/2"	11-1/8"	3/4"	3/4"

1) Safe Working Load provides a factor of safety of approximately 4 to 1 in 3,500 psi normal weight concrete.
2) Side notches are provided on 4-ton T-Anchors only.
3) No side notches are provided on 2, 6 and 8-ton T-Anchors.
4) Use 8-10T P99 Recess and P91 Ring Clutch with FL319*.

CONSOLIDECK®

PROSOCO
SINCE 1939

Saltguard® WB

deep-penetrating water & salt barrier

DESCRIPTION AND USE

Consolideck® Saltguard® WB is a ready-to-use water-based, VOC compliant silane/siloxane water repellent and "chloride screen" for the protection of concrete and masonry surfaces. Saltguard® WB penetrates more deeply than conventional water- or solvent-based water repellents. Low odor and alkaline stable, Saltguard® WB is ideal for field or in-plant application to concrete and most masonry surfaces. Saltguard® WB protects horizontal and vertical surfaces from moisture intrusion and chemical attack of chloride salts.

Saltguard® WB's Volatile Organic Compound (VOC) content is 194 grams/liter.

In coastal areas, Saltguard® WB protects against salt air by screening chlorides from penetrating through concrete to the reinforcing steel. Saltguard® WB reduces rebar corrosion and surface spalling caused by water-carried salts. Use Saltguard® WB on horizontal surfaces such as driveways, sidewalks, tile or brick pavers. Provides excellent protection for retaining walls, bridge pilings and other vertical areas exposed to deicing salts.

Saltguard® WB is a ready-to-use effective alternative to conventional solvent-based silanes and siloxanes. Saltguard® WB penetrates and chemically bonds deep within the concrete or masonry substrate to provide long-lasting protection against moisture intrusion and water-related staining or deterioration.

Properly applied, Saltguard® WB produces no surface film. Treated surfaces keep their natural breathing characteristics and natural appearance.

Saltguard® WB is recommended for these substrates. Always test. Coverage is in square feet/meters per gallon.

Substrate	Type	Use?	Coverage
Architectural Concrete Block	Burnished	❖	
	Smooth	❖	
	Split-faced	❖	
	Ribbed	❖	
Concrete	Brick	**yes**	150-300 sq. ft. 14-28 sq. m.
	Tile	**yes**	
	Precast Panels	**yes**	
	Pavers	**yes**	
	Cast-in-place	**yes**	
Fired Clay	Brick	**yes**	100-175 sq. ft. 9-16 sq. m.
	Tile	**yes**	
	Terra Cotta	**yes**	
	Pavers	**yes**	
Marble, Travertine, Limestone	Polished	no	NA
	Unpolished	no	NA
Granite	Polished	no	NA
	Unpolished	no	NA
Sandstone	Unpolished	**yes**	100-175 sq. ft. 9-16 sq. m.
Slate	Unpolished	no	NA

❖ Sure Klean® Custom Masonry Sealer or Weather Seal Blok-Guard® & Grafitti Control may be more appropriate. Always test to ensure desired results. Coverage estimates depend on surface texture and porosity.

ADVANTAGES

- **Penetrates to produce long-lasting protection on vertical or horizontal surfaces.**
- **Water-based formula minimizes explosion and fire hazards associated with alcohol- or solvent-based water repellents.**
- **Easy soap-and-water cleanup from window glass, window frames and application equipment.**
- **Low odor reduces risk of application to occupied buildings.**
- **Alkaline stable — suitable for new "green" concrete, 14-28 days old.**
- **Effective protection against deicing salts and salt air.**

Limitations

- Will not prevent water penetration through structural cracks, defects or open joints.
- Water repellency of treated surfaces will increase for up to 14 days after application.

TECHNICAL DATA

ACTIVE SUBSTANCE: Emulsion of silanes and oligomeric alkyl alkoxysiloxanes.
ACTIVE MATERIAL CONTENT: 10%
FORM: White, milky liquid
SPECIFIC GRAVITY: 0.990
FLASH POINT: >200°F (>93°C)
FREEZE POINT: 32°F (0°C)
VOC: 194 grams/liter (ASTM D 3960)
WT./GAL.: 8.24 lbs.

Performance Tests

Laboratory testing has shown this product to be a singularly effective general purpose water repellent/chloride screen.

 ©Copyright PROSOCO, Inc. 2002

NCHRP 244 Series II Reduction of Water absorption (compared to untreated control)	89%
NCHRP 244 Series IV Reduction in total chloride ion concentration (as compared to untreated control specimens)	91%
AASHTO T259/260	
Chloride penetration	2.8
Total chlorides, pcy	2.1
ASTM C 140 Reduction of water absorption (compared to untreated control)	92%
ASTM C 67 Reduction of water absorption (compared to untreated control)	94%
ASTM E 514 Wind-driven rain penetration (percent reduction of control)	89%
Surface deterioration/discoloration:	None
Penetration (depending on substrate)	1-10 mm
Resistance to:	
· Sunlight	Excellent
· Alkalinity	Excellent
Surface Appearance (after application)	No change

Saltguard® WB is not suitable for application to synthetic resin paints, gypsum, or other nonmasonry surfaces. The product may not be suitable for surfaces to receive paints or coatings. Always test for compatibility.

PREPARATION

Protect people, property, vehicles, and (to minimize cleanup) all nonmasonry surfaces that may come into contact with the product, spray, wind drift or fumes. Protect and/or divert pedestrian and auto traffic.

Though Saltguard® WB has very little odor, avoid exposing building occupants to fumes. Maintain adequate ventilation when working on interior surfaces.

Surface Preparation

Thoroughly clean the surface using the appropriate Sure Klean® or Enviro Klean® product. Remove any curing compound or previous sealer. Though Saltguard® WB may be applied to slightly damp surfaces, best performance is achieved on clean, visibly dry and absorbent surfaces. Excessive moisture inhibits penetration and reduces the service life and performance of the treatment.

Clean newly constructed and repointed surfaces before application. Saltguard® WB won't impair adhesion of most sealing and caulking compounds. Always test for compatibility.

Surface and air temperatures must be at least 40°F (4°C) during application and above 40°F (4°C) for 8 hours following. If freezing conditions exist before application, let masonry thaw thoroughly. Subfreezing temperatures will freeze/crystallize Saltguard® WB, inhibiting penetration and significantly impairing results. Surface and air temperatures should not exceed 95°F (35°C). Higher temperatures evaporate the water carrier, reducing penetration.

Equipment

Apply with brush, roller or low-pressure spray (20 psi). Set sprayer to produce a wet stream. Avoid atomization of the material. Make sure all containers used for mixing or handling are clean and uncontaminated.

APPLICATION

Before use, read "Preparation" and "Safety Information."

ALWAYS TEST each type of surface for suitability and results before overall application. Test using the following application instructions. Let test dry thoroughly before inspection. Mix well before applying.

DO NOT DILUTE OR ALTER MATERIAL, OR USE FOR PURPOSES OTHER THAN SPECIFIED.

Vertical Application Instructions

For best results, apply Saltguard® WB "wet-on-wet" to a visibly dry and absorbent surface.

Spray: saturate from the bottom up. Apply enough for a 4" to 8" (15 to 20 cm) rundown below the spray contact point. Let the first application penetrate for 5-10 minutes. Reapply in the same saturating manner. Less material will be needed for the second application.

Brush or roller: apply uniformly. Saturate the surface. Let Saltguard® WB penetrate for 5 to 10 minutes. Brush out heavy runs and drips that don't penetrate.

Horizontal Application Instructions

1. Apply Saltguard® WB in a single saturating application. Use enough to keep the surface wet for 2 to 3 minutes before penetrating.
2. Broom out all puddles thoroughly until they penetrate the surface. Wipe up all excess material.

Treated surfaces will dry to touch within 1 hour. Protect surfaces from rainfall for a minimum of 6 hours following treatment. Treated surfaces will be ready for pedestrian and vehicle traffic in 24 hours. Many surfaces may require several days to achieve full water repellent effectiveness.

 ©Copyright PROSOCO, Inc. 2002

Dense Surface Application Instructions
Apply a single coat. Use enough Saltquard WB to completely wet the surface without creating drips, puddles or rundown. DO NOT OVERAPPLY. Test for application rate.

Cleanup
Clean tools, equipment, and surfaces affected by overspray with soap and warm water.

Paint Adhesion
Surfaces treated with Saltguard® WB may be coated with silicone emulsion paints and many oil- base paints. Always test to assure adhesion. Adhesion may be improved if surface is pressure- rinsed and allowed to dry before application.

Adhesion of some cementitious coatings, plaster, stucco, etc., may be adversely affected. Such surface treatments should be installed and allowed to thoroughly cure before installation of Saltguard® WB.

Always test to verify compatibility between Saltguard® WB and other proposed surface treatments.

SAFETY INFORMATION

Caution. May cause eye and skin irritation. For use by professional applicators only. Keep out of reach of children.

Precautions:
Contains: Oligomeric alkyl alkoxysiloxane. Avoid eye contact. Wear safety glasses or splash goggles depending on application procedures. Avoid prolonged skin contact. If skin is sensitive or becomes irritated, wear rubber gloves. Wear long-sleeved work clothing or splash-resistant clothing as needed. Do not breath mists. May cause respiratory irritation. Wear a NIOSH-approved dust/mist respirator as needed. Wash thoroughly after handling. Generates ethyl and methyl alcohol during curing. Maintain adequate ventilation inside. **Storage and handling:** Store and transport upright with lid tightly in place. Store in a cool, dry place. Keep from freezing. Do not reuse or remove the label. **Do not alter,** dilute product or use for applications other than specified. **If spilled,** keep from drains and soil. Absorb with inert media. Dispose of contaminated absorbent, container and product in accordance with local, state and federal regulations. Read the MSDS and label for additional cautionary information.

First Aid
Ingestion: Call a physician, emergency room or poison control center immediately for instruction on properly inducing vomiting. Get medical assisatance.
Eye Contact: Rinse thoroughly for 15 minutes. Get immediate medical assistance.
Skin Contact: Remove contaminated clothing and rinse thoroughly for 15 minutes. Seek medical assistance if persistent irritation develops. Launder contaminated clothing before reuse.
Inhalation: Seek medical attention if irritation develops.

Shelf Life: 1 year from the date of manufacture in tightly sealed, unopened container.

24 Hour Emergency Information: INFOTRAC at 1-800-535-5053

VOC content =194 g/ L.

WARRANTY

The information and recommendations made are based on our own research and the research of others, and are believed to be accurate. However, no guarantee of their accuracy is made because we cannot cover every possible application of our products, nor anticipate every variation encountered in masonry surfaces, job conditions and methods used. The purchasers shall make their own tests to determine the suitability of such products for a particular purpose.

PROSOCO Inc. warrants this product to be free from defects. **Where permitted by law, PROSOCO makes no other warranties with respect to this product, express or implied, including without limitation the implied warranties of merchantability or fitness for particular purpose.** The purchaser shall be responsible to make his own tests to determine the suitability of this product for his particular purpose. PROSOCO's liability shall be limited in all events to supplying sufficient product to re- treat the specific areas to which defective product has been applied. Acceptance and use of this product absolves PROSOCO from any other liability, from whatever source, including liability for incidental, consequential or resultant damages whether due to breach of warranty, negligence or strict liability. This warranty may not be modified or extended by representatives of PROSOCO, its distributors or dealers.

CUSTOMER CARE

Factory personnel are available for product, environment and job- safety assistance with no obligation. Call 800- 255- 4255 and ask for Customer Care - technical support.

Factory- trained representatives are established in principal cities throughout the continental United States. Call Customer Care at 800- 255- 4255, or visit our website at www.prosoco.com, for the name of the Consolideck® representative in your area.

 ©Copyright PROSOCO, Inc. 2002

P-75 AND P-75-H UTILITY ANCHOR

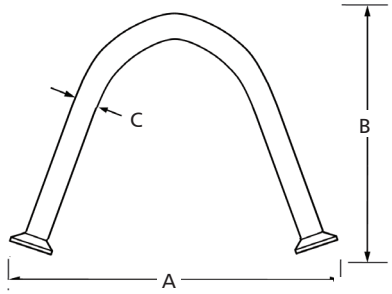

P-75 Utility Anchor

The Dayton Superior Utility Anchors are available in three diameters and a series of lengths for specific concrete thickness. The utility anchor can be set in either a 90° or a 45° anchor orientation using the appropriate setting plug.

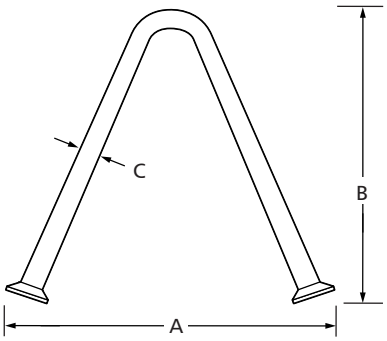

P-75-H Utility Anchor

To Order:
Specify: (1) quantity, (2) name, (3) product code.

Example:
200, P-75 Utility Anchors, 5UA444.

P-75 and P-75-H Utility Anchor							
Anchor	Type	Product Code No.	A	B	C	End Shape	Minimum Edge Distance
P-75	4UA444	121877	5-1/4"	3-1/8"	0.444"	Swift Lift	9"
	5UA444	123442	6"	3-3/4"	0.444"	Swift Lift	11"
	6UA444	121888	7-3/8"	4-3/4"	0.444"	Swift Lift	15"
	5UA671	123441	6 7/16"	3-3/4"	0.671"	Swift Lift	11"
	6UA671	121889	7-3/8"	4-3/4"	0.671"	Swift Lift	15"
	8UA671	121891	9-3/4"	6-3/4"	0.671"	Swift Lift	20"
P-75-H	12UA875	124738	15-7/8"	11"	0.875"	Swift Lift	30”

Anchor	Type	Product Code No.	Minimum Panel Thickness	Safe Working Load Tension 90	Safe Working Load Shear 90	Safe Working Load Tension/Shear 45	Edge Distance
P-75	4UA444	121877	4"	3,200	5,800	**2,260**	9"
	5UA444	123442	5"	3,860	7,710	**2,730**	10"
	6UA444	121888	5 5/8"	4,460	9,460	**3,150**	12"
	5UA671	123441	5"	4,560	8,430	**3,220**	10"
	6UA671	121889	5 5/8"	7,320	15,780	**5,170**	12"
	8UA671	121891	7 5/8"	10,830	18,850	**7.660**	16"
P-75-H	12UA875	124738	12"	24,000	---	24,000	---

Safe Working Loads are based on 4:1 safety factors in 4000 psi concrete

Note:
1) Compressive strength of normal weight concrete to be 4,000 psi at time of initial lift.
2) Safe working loads provide an approximate factor of safety of 4 to 1.
3) Utility anchors to be installed at 90° to surface of the concrete.
4) Shear safe working loads are based on loading in the direction of the top of the precast concrete element.

Refer to www.daytonsuperior.com for latest Technical Data Sheet and MSDS
7777 Washington Village Dr., Suite 130, Dayton OH 45459
Customer Service: (888) 977-9600
Technical Assistance: (866) 329-8724

P-75-C UTILITY ANCHOR WITH CLIP

The Dayton Superior Utility Anchor with Clip is designed to allow the Utility Anchor to be secured to the wire mesh cage. This product utilizes the P-75 Utility Anchors with 2 wire clips welded to opposite legs of the anchor. These wire clips are positioned to hold the utility anchor with Void to the wire mesh in the proper position in the wall for lifting your precast product. Both the 5UA and 6UA anchors in 0.444 and 0.671 diameters for 9" wire spacing are in stock. Other anchor and wire spacing are readily available from our Parsons KS plant.

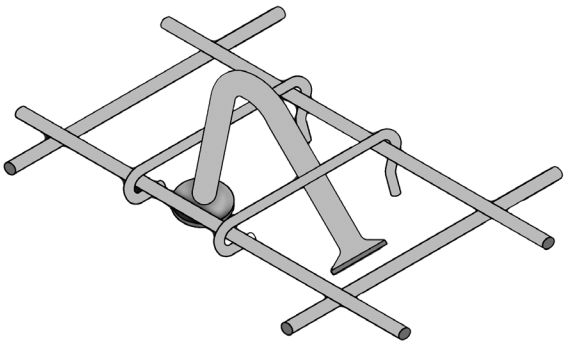

Product Code	Utility Anchor	Wire Clip Lengths	Wall Thickness
123443	5UA444	9"	5"
121890	5UA671	9"	5"
121892	6UA444	9"	6"
121893	6UA671	9"	6"
127446	8UA671	9"	8"

To Order:
Specify: (1) quantity, (2) name, (3) product code (4) anchor size, (5) wire spacing (6) wall thick ness.

Example:
200, P-75-C, #121443, 5UA444anchor, 9" wire spacing, 5" wall.

Refer to www.daytonsuperior.com for latest Technical Data Sheet and MSDS
7777 Washington Village Dr., Suite 130, Dayton OH 45459
Customer Service: (888) 977-9600
Technical Assistance: (866) 329-8724